US007272375B2

(12) **United States Patent**
Tuttle et al.

(10) **Patent No.: US 7,272,375 B2**
(45) **Date of Patent: Sep. 18, 2007**

(54) **INTEGRATED LOW-IF TERRESTRIAL AUDIO BROADCAST RECEIVER AND ASSOCIATED METHOD**

(75) Inventors: **G. Tyson Tuttle**, Austin, TX (US); **Dan B. Kasha**, Salt Lake City, UT (US)

(73) Assignee: **Silicon Laboratories Inc.**, Austin, TX (US)

(*) Notice: Subject to any disclaimer, the term of this patent is extended or adjusted under 35 U.S.C. 154(b) by 320 days.

(21) Appl. No.: **10/881,926**

(22) Filed: **Jun. 30, 2004**

(65) **Prior Publication Data**

US 2006/0003729 A1 Jan. 5, 2006

(51) **Int. Cl.**
H04B 1/28 (2006.01)

(52) **U.S. Cl.** **455/333**; 455/150.1; 455/205

(58) **Field of Classification Search** 455/130–131, 455/133, 140, 150.1, 142, 73, 168.1, 87, 455/176.1, 205, 179.1, 208, 180.1, 255, 187.1, 455/227, 252.1, 280, 333, 334, 312, 188.2, 455/283, 285, 151.2, 256, 266, 258, 265, 455/552.1; 375/334, 316, 335

See application file for complete search history.

(56) **References Cited**

U.S. PATENT DOCUMENTS

3,931,578	A	1/1976	Gittinger	
4,484,221	A	11/1984	Tults	
4,551,856	A	11/1985	Victor et al.	
5,768,696	A *	6/1998	Law	455/127.1
5,983,088	A	11/1999	Aschwanden	
6,205,183	B1	3/2001	Dent	
6,370,368	B1	4/2002	Kianush	
6,539,066	B1	3/2003	Heinen	
6,567,654	B1	5/2003	Coronel Arredondo et al.	
6,647,075	B1	11/2003	Genrich	
6,990,357	B2 *	1/2006	Ella et al.	455/552.1
2001/0041532	A1	11/2001	Tomasz et al.	
2004/0042539	A1	3/2004	Vishakhadatta et al.	
2004/0176058	A1 *	9/2004	Johnson	455/147
2004/0183610	A1 *	9/2004	Seppinen et al.	331/177 V
2004/0204034	A1 *	10/2004	Hanrahan	455/552.1
2005/0003773	A1 *	1/2005	Cowley et al.	455/150.1

FOREIGN PATENT DOCUMENTS

EP	1113573	7/2001
EP	1328067	7/2003

OTHER PUBLICATIONS

PCT International Search Report; PCT/US2005/022398.

(Continued)

Primary Examiner—Quochien B. Vuong
(74) *Attorney, Agent, or Firm*—O'Keefe, Egan, Peterman & Enders, LLP

(57) **ABSTRACT**

An integrated low-IF (low intermediate frequency) terrestrial broadcast receiver and associated method are disclosed that provide an advantageous and cost-efficient solution. The integrated receiver includes a mixer, local oscillator generation circuitry, low-IF conversion circuitry, and DSP circuitry. And the integrated receiver is particularly suited for small, portable devices and the reception of terrestrial audio broadcasts, such as FM and AM terrestrial audio broadcast, in such portable devices.

9 Claims, 11 Drawing Sheets

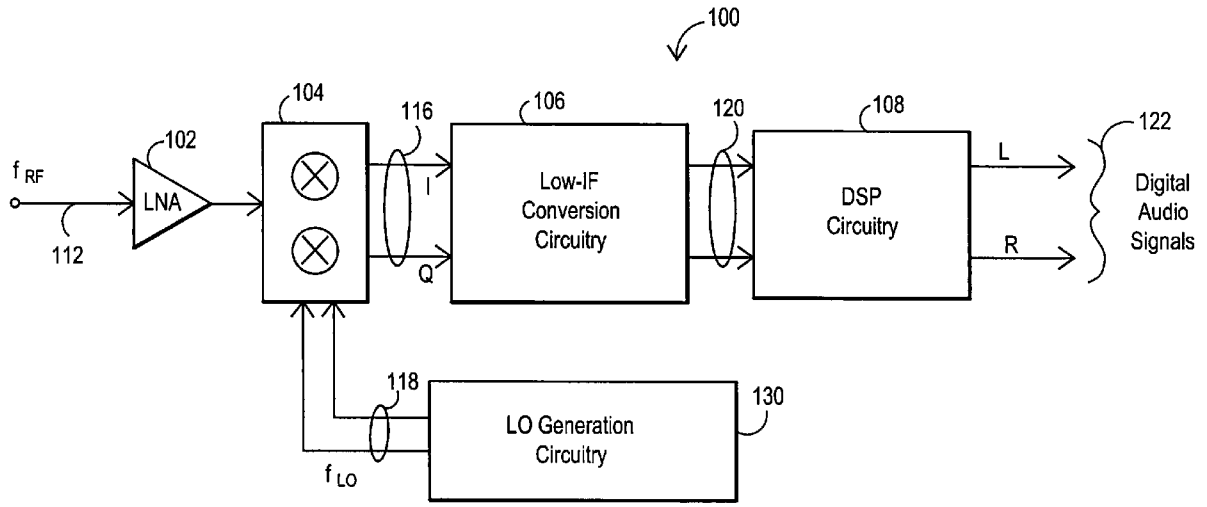

Comcast, Ex. 1242

OTHER PUBLICATIONS

Allegri et al., "Single-Chip PLL-FM-Receiver," Swiss Federal Institute of Technology Zurich, Integrated Systems Laboratory, Winter Semester 1997/1998, pp. 1-124.

Philips Semiconductor Data Sheet No. TEA5711; TEA5711T, "AM/FM Stereo Radio Circuit," Sep. 1994.

Philips Semiconductor Data Sheet No. TEA5767HN, "Low-Power FM Stereo Radio For Handhald Applications," Nov. 12, 2003.

Philips Semiconductor Preliminary Data Sheet No. TEA5880TS, "Integrated FM Stereo Radio IC For Host Processor Tuning In Handheld Applications—Rev. 02," Apr. 26, 2004.

Copending U.S. Appl. No. 10/880,483, filed Jun. 30, 2004, "Ratiometric Clock Systems For Integrated Receivers And Associated Methods" (SILA:215).

Copending U.S. Appl. No. 10/881,579, filed Jun. 30, 2004, "Dynamic Selection of Local Oscillator Signal Injection For Image Rejection in Integrated Receivers" (SILA:216).

* cited by examiner

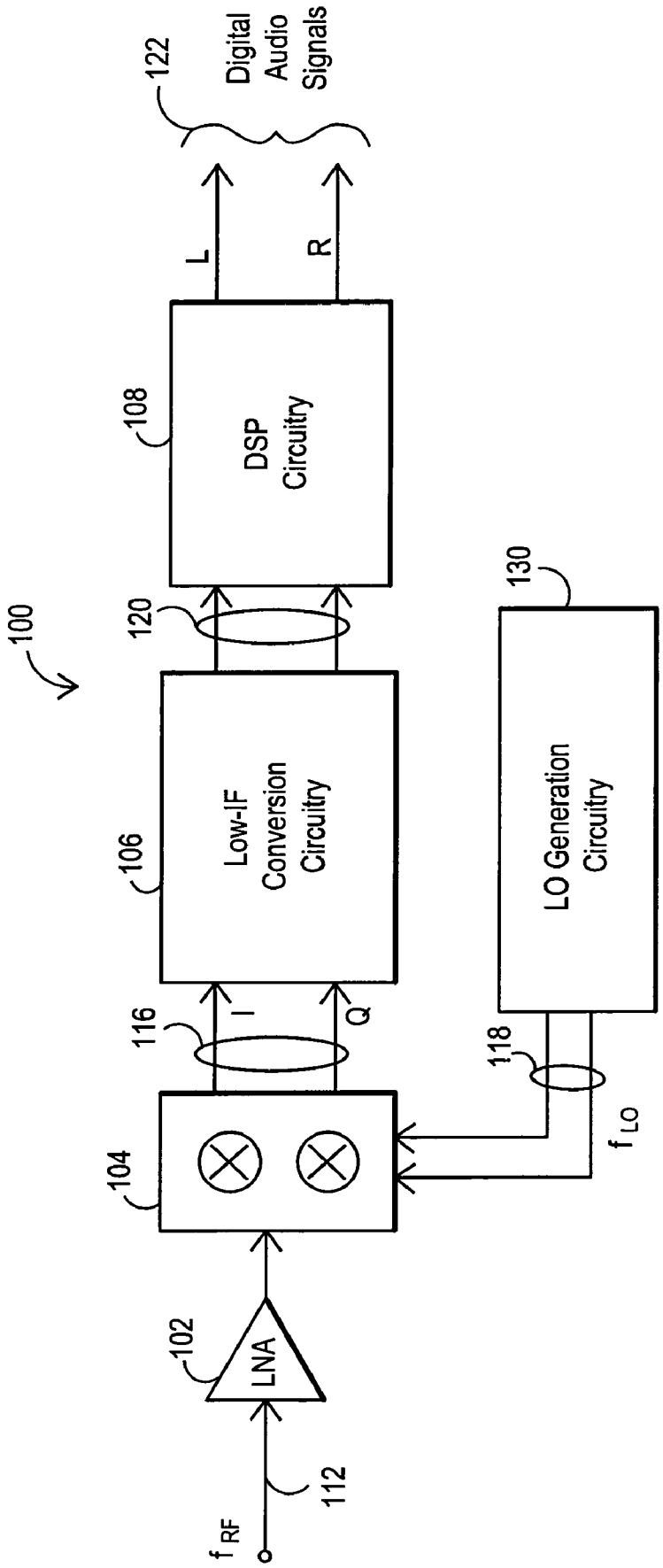
100
122
Digital Audio Signals
L
R
108
DSP Circuitry
120
106
Low-IF Conversion Circuitry
130
LO Generation Circuitry
116
I
Q
118
f_{LO}
104
102
LNA
112
f_{RF}

FIG. 1A

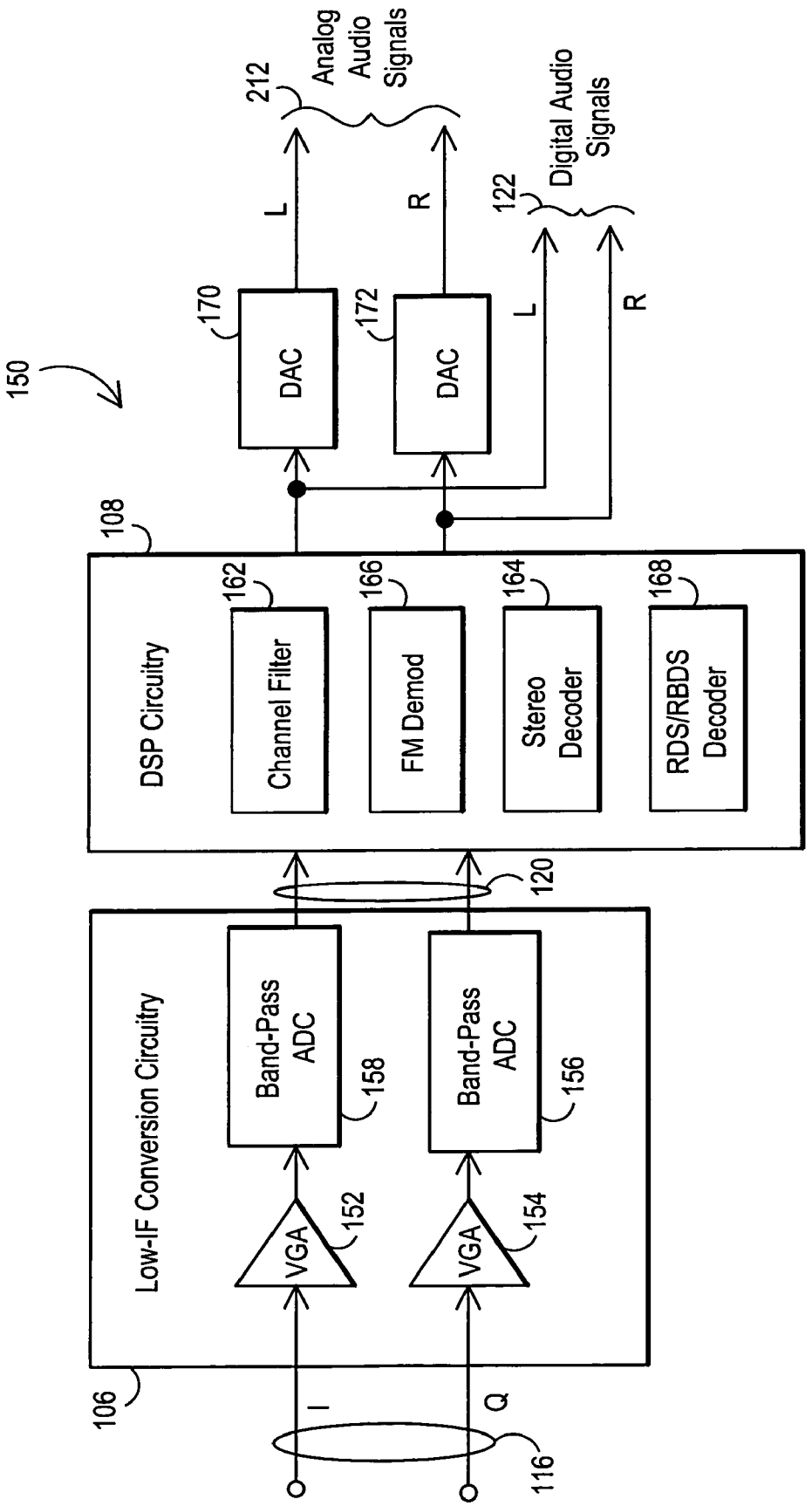
150
106
Low-IF Conversion Circuitry
VGA
152
VGA
154
Band-Pass ADC
158
Band-Pass ADC
156
I
Q
116
120
108
DSP Circuitry
Channel Filter
162
FM Demod
166
Stereo Decoder
164
RDS/RBDS Decoder
168
DAC
170
DAC
172
L
R
212
Analog Audio Signals
L
R
122
Digital Audio Signals

FIG. 1B

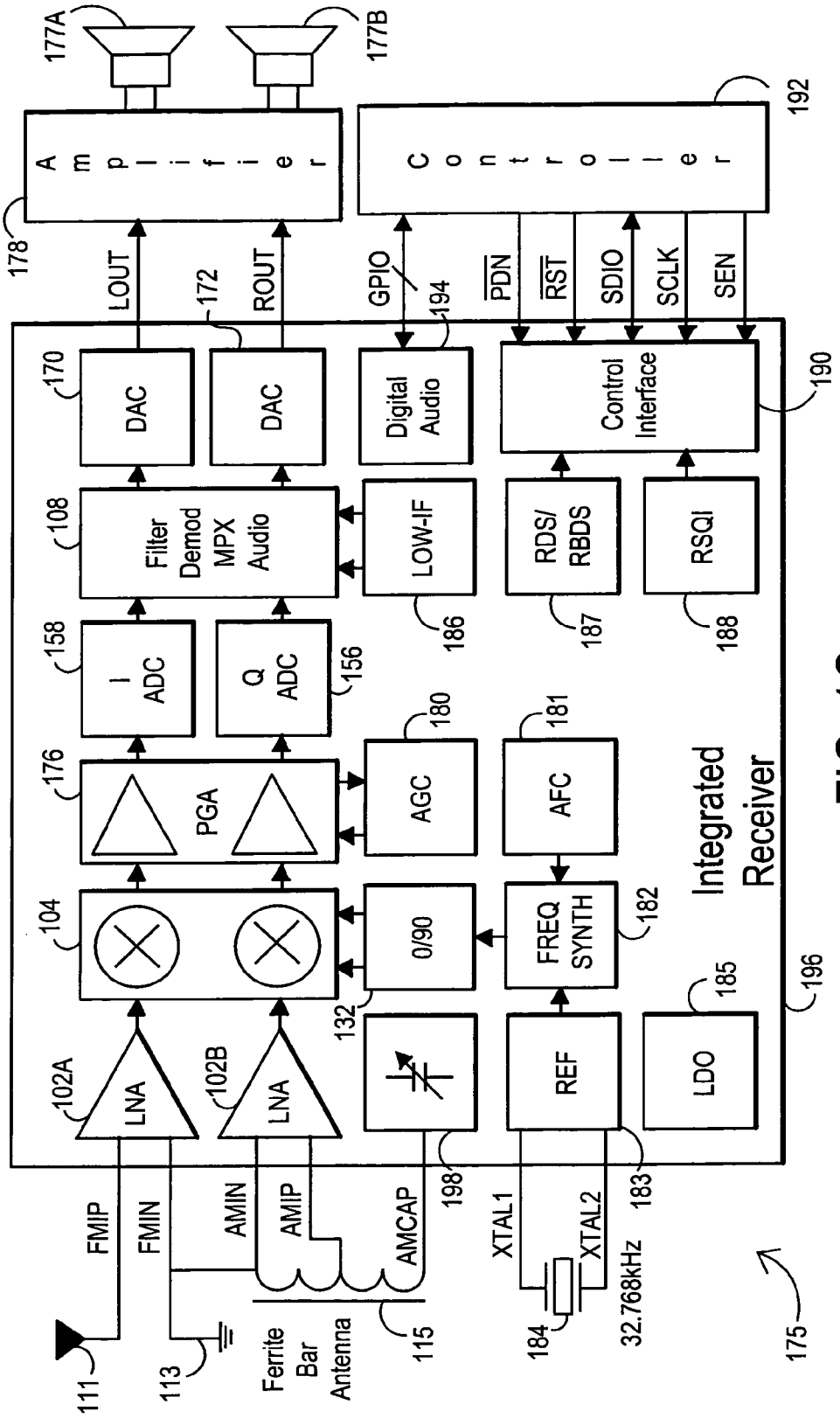
177A
177B
Amplifier
178
LOUT
ROUT
172
Controller
192
GPIO
194
PDN
RST
SDIO
SCLK
SEN
DAC
170
DAC
Digital Audio
Control Interface
190
Filter Demod MPX Audio
108
LOW-IF
186
RDS/ RBDS
187
RSQI
188
I ADC
158
Q ADC
156
PGA
176
AGC
180
AFC
181
Integrated Receiver
104
0/90
132
FREQ SYNTH
182
196
LNA
102A
LNA
102B
REF
183
LDO
185
198
FMIP
FMIN
AMIN
AMIP
AMCAP
XTAL1
XTAL2
32.768kHz
184
111
113
Ferrite Bar Antenna
115
175

FIG. 1C

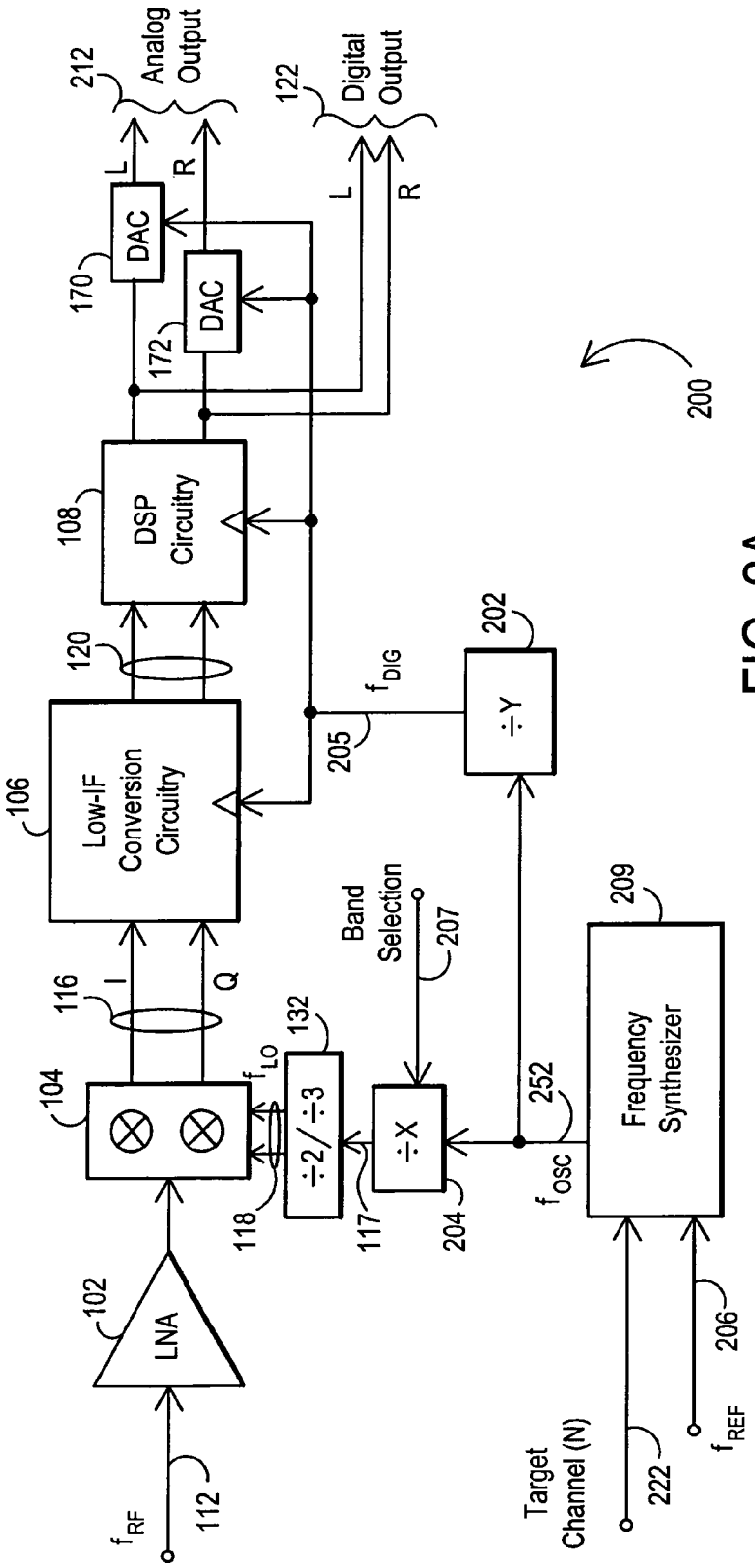
212
Analog Output
122
Digital Output
L
R
L
R
170
DAC
172
DAC
200
108
DSP Circuitry
120
202
÷Y
f_{DIG}
205
106
Low-IF Conversion Circuitry
Band Selection
207
209
Frequency Synthesizer
116
I
Q
132
f_{LO}
104
÷2/÷3
÷X
252
f_{OSC}
118
117
204
102
LNA
206
f_{REF}
Target Channel (N)
222
f_{RF}
112

FIG. 2A

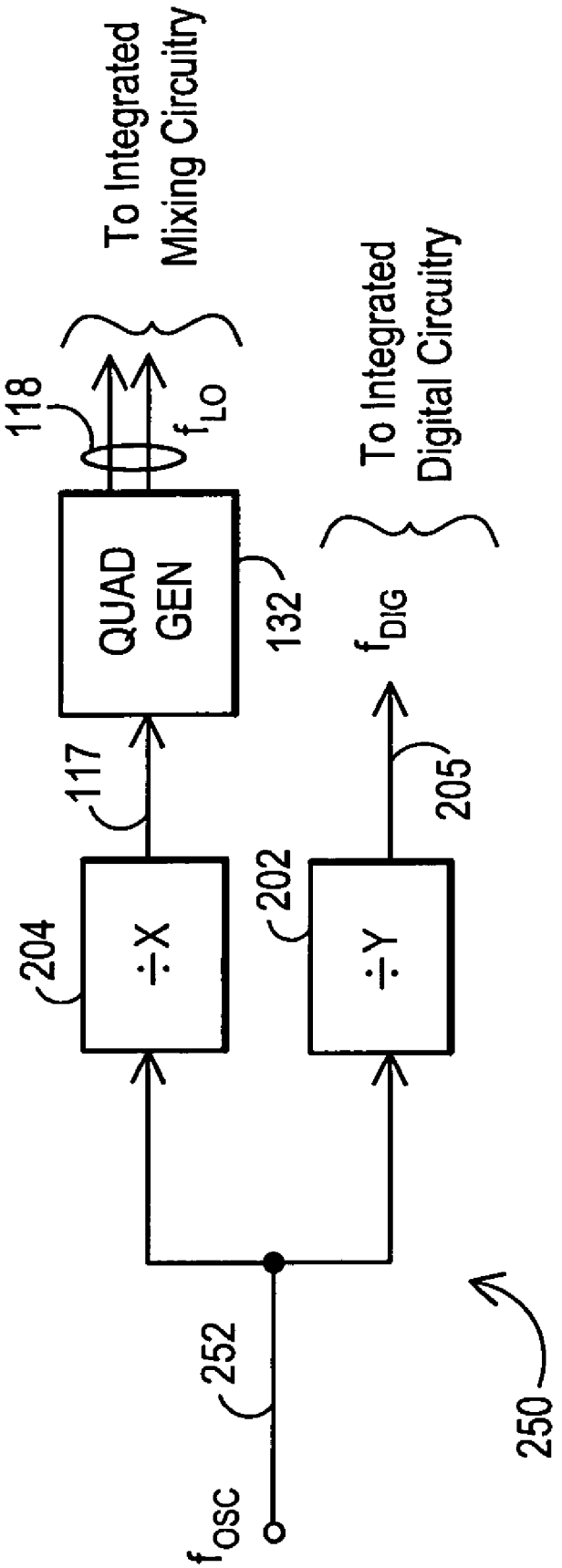
To Integrated Mixing Circuitry
118
f_{LO}
QUAD GEN
132
To Integrated Digital Circuitry
f_{DIG}
117
205
204
÷X
202
÷Y
252
f_{OSC}
250

FIG. 2B

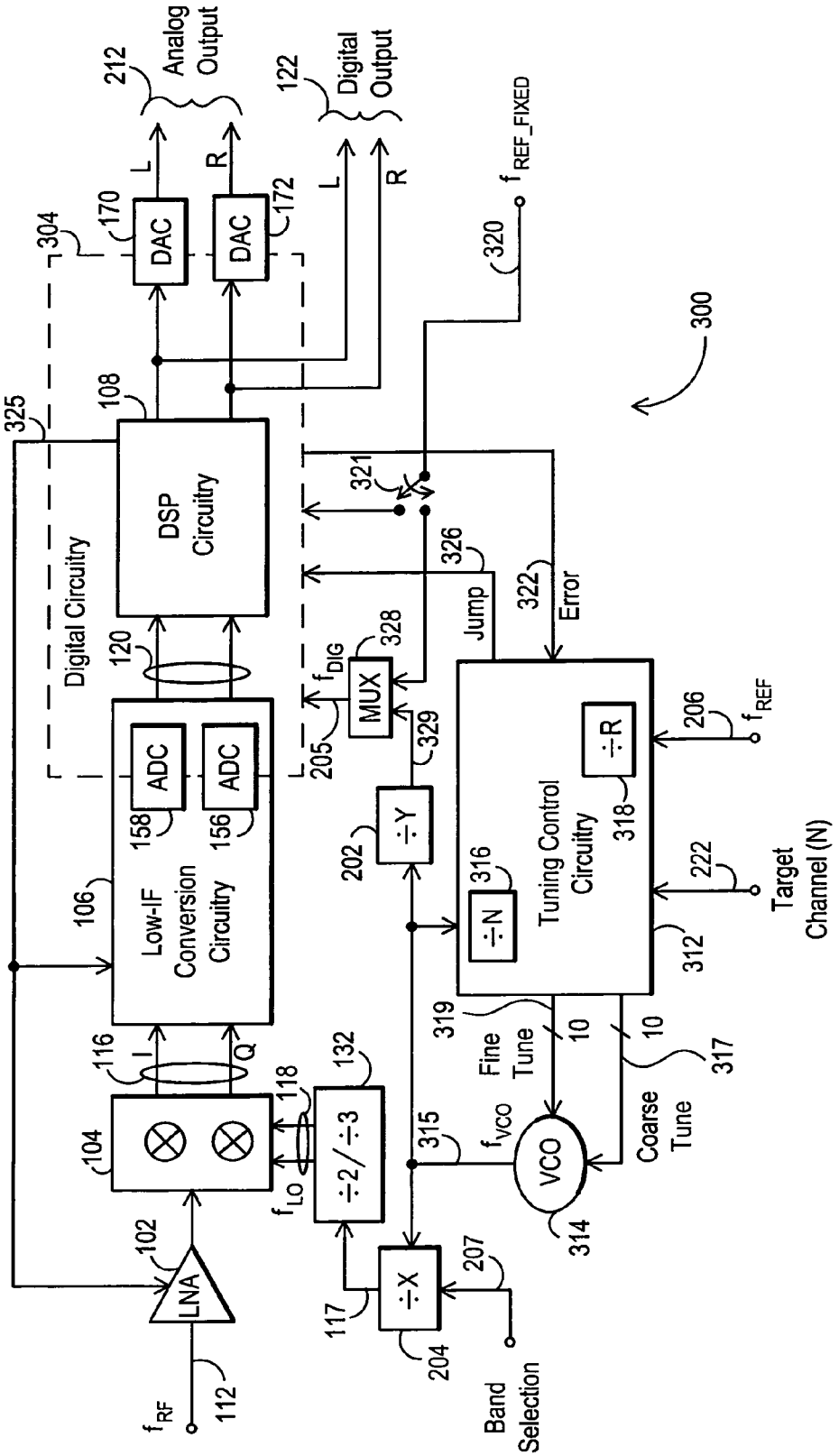
Analog Output
212
Digital Output
122
DAC
170
DAC
172
L
R
L
R
304
325
108
DSP Circuitry
Digital Circuitry
120
ADC
158
ADC
156
Low-IF Conversion Circuitry
106
116
I
Q
104
102
LNA
112
f_{RF}
118
f_{LO}
÷2/÷3
132
117
÷X
204
207
Band Selection
315
f_{VCO}
VCO
314
÷Y
202
f_{DIG}
205
MUX
328
329
321
326
Jump
322
Error
f_{REF_FIXED}
320
300
÷N
316
Tuning Control Circuitry
312
÷R
318
206
f_{REF}
222
Target Channel (N)
319
Fine Tune
10
10
317
Coarse Tune

FIG. 3A

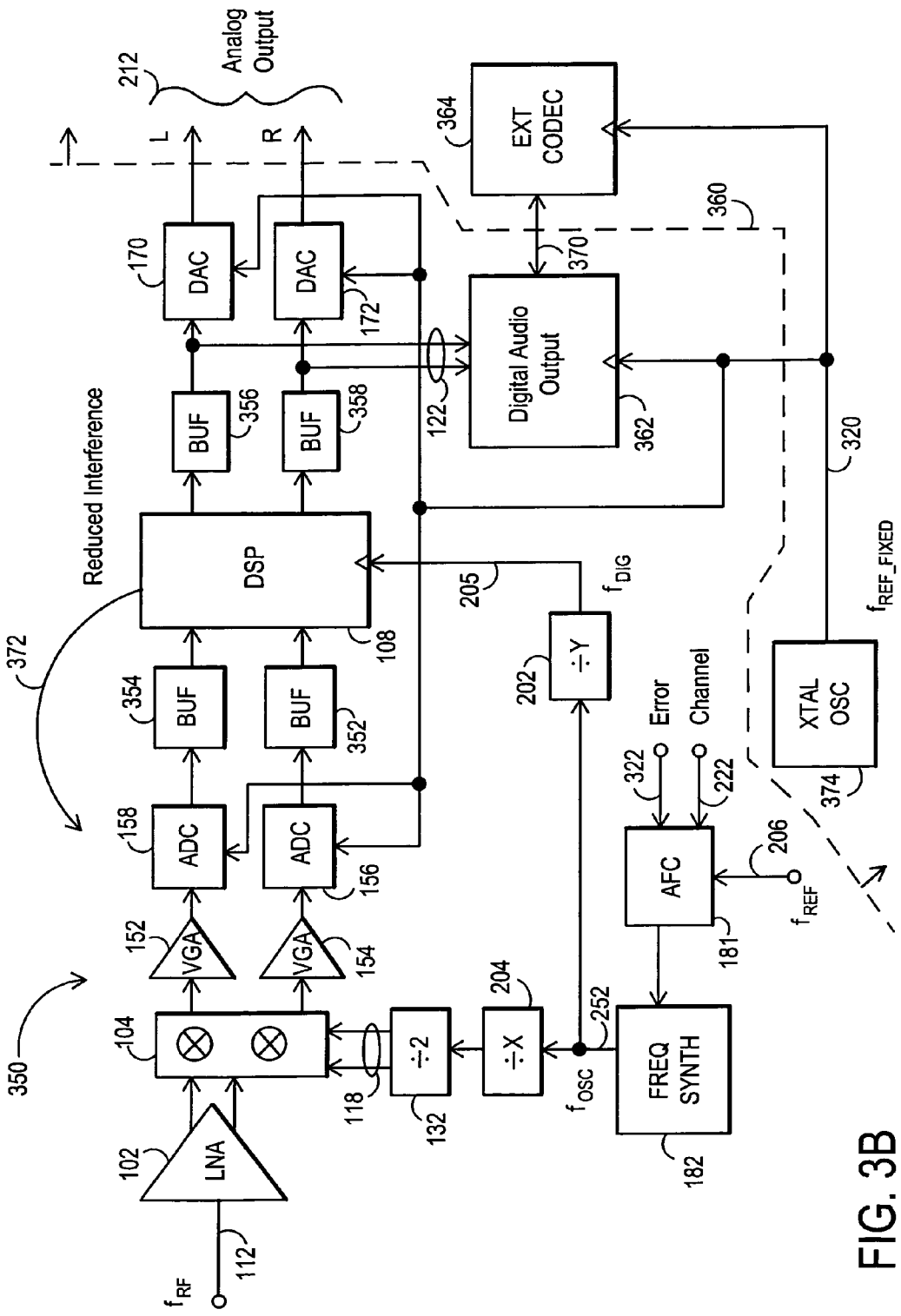
Analog Output
212
L
R
170
DAC
DAC
172
364
EXT CODEC
360
370
Digital Audio Output
362
122
BUF
356
BUF
358
Reduced Interference
DSP
108
205
f_{DIG}
320
f_{REF_FIXED}
372
354
BUF
BUF
352
202
÷Y
Error
Channel
322
222
XTAL OSC
374
158
ADC
ADC
156
152
VGA
VGA
154
AFC
206
f_{REF}
181
350
104
÷2
118
132
204
÷X
252
f_{OSC}
FREQ SYNTH
182
102
LNA
112
f_{RF}

FIG. 3B

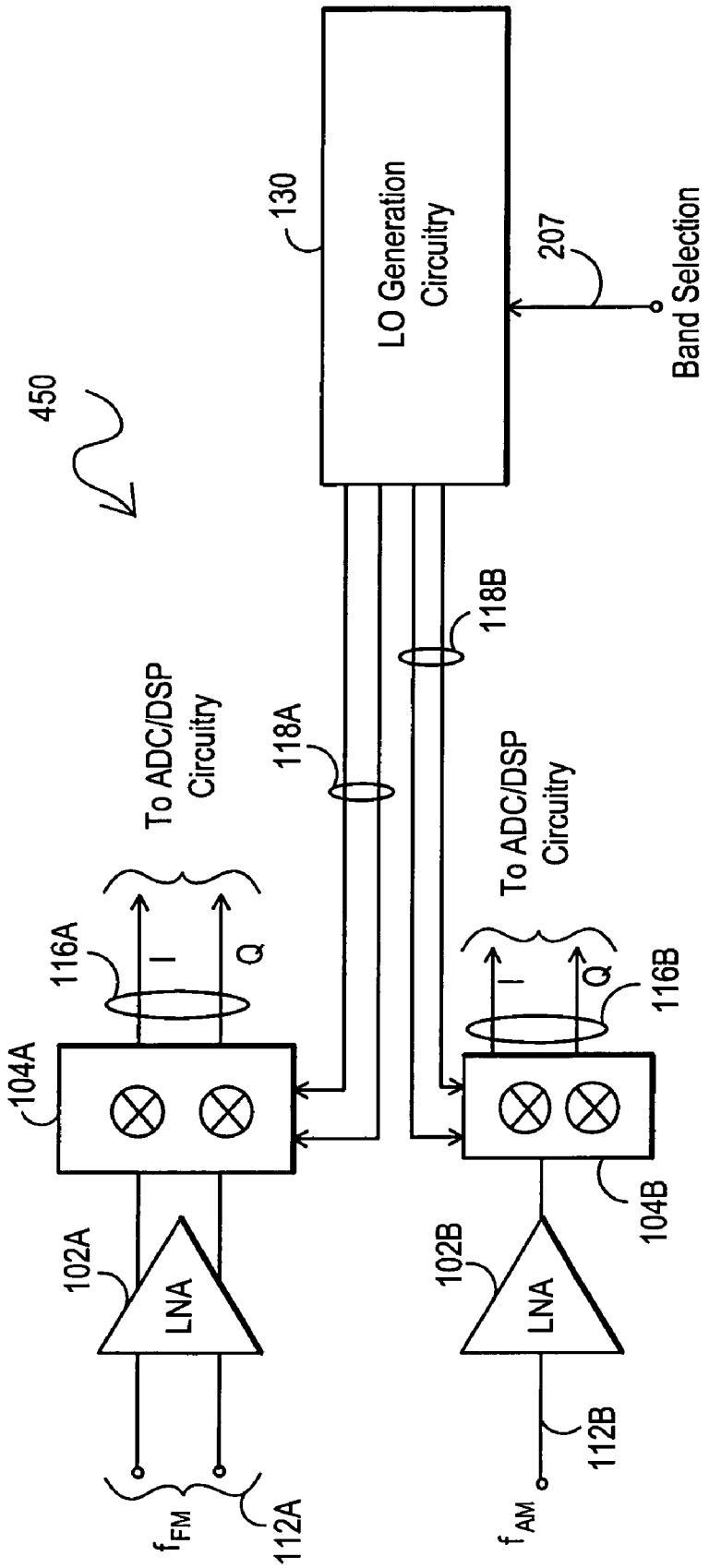
450
130
LO Generation Circuitry
207
Band Selection
118B
118A
To ADC/DSP Circuitry
To ADC/DSP Circuitry
116A
I
Q
I
Q
116B
104A
104B
102A
LNA
102B
LNA
112A
112B
f_{FM}
f_{AM}

FIG. 4A

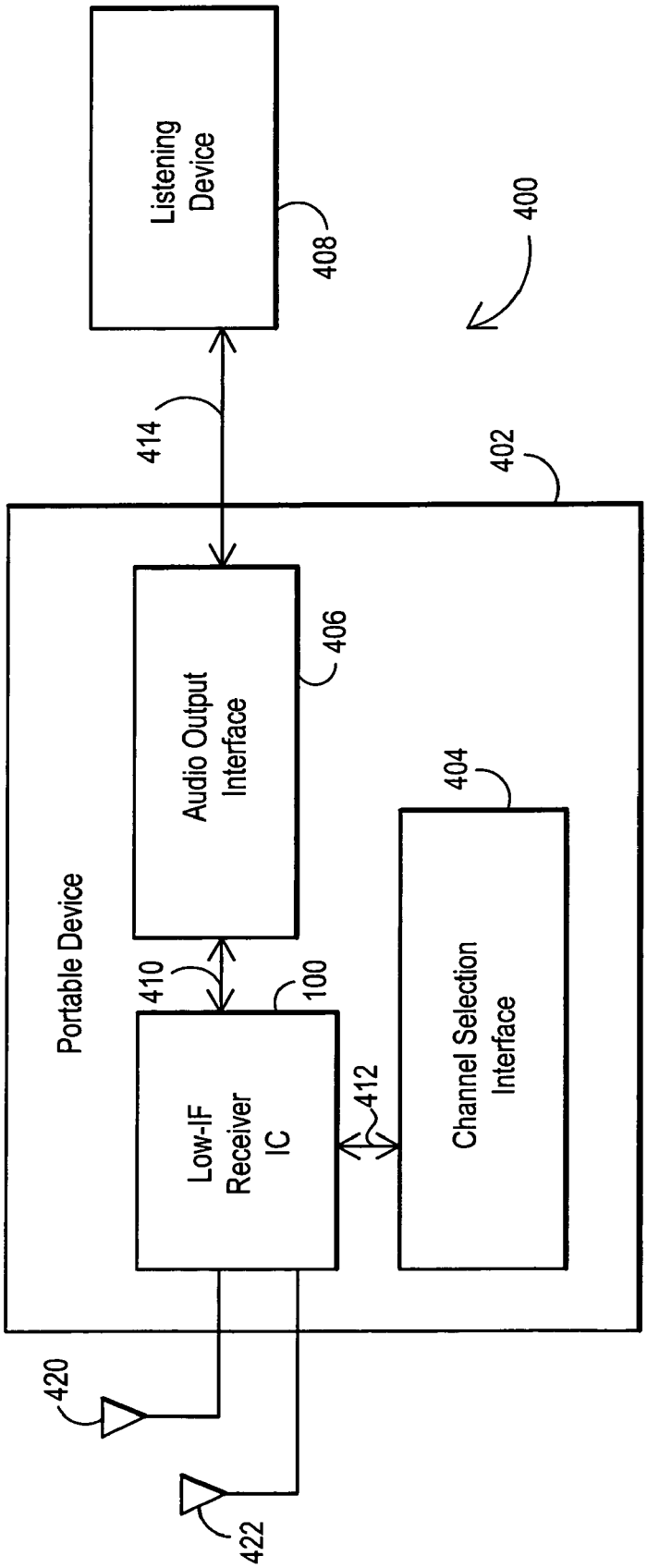
Listening Device
408
400
414
402
Audio Output Interface
406
404
Portable Device
410
100
Channel Selection Interface
Low-IF Receiver IC
412
420
422

FIG. 4B

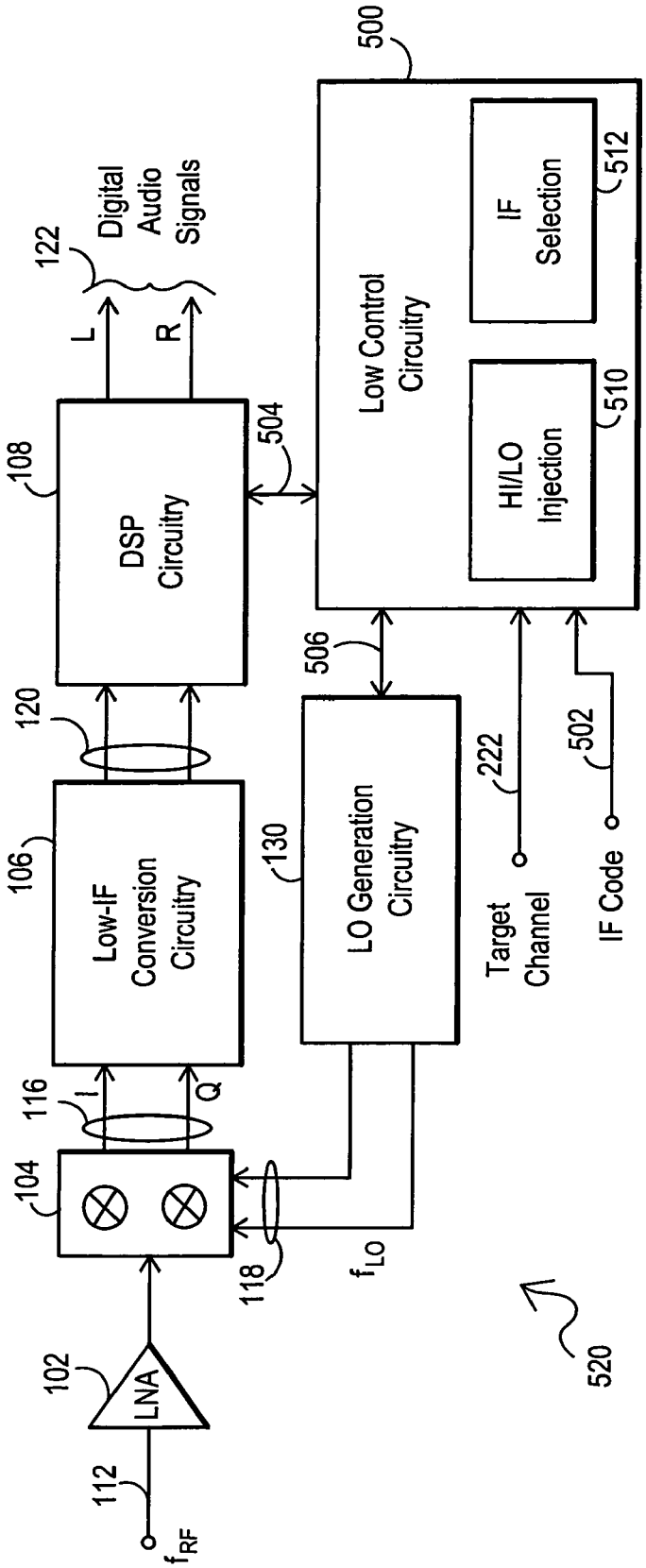
500
Low Control Circuitry
IF Selection
512
HI/LO Injection
510
Digital Audio Signals
122
L
R
108
DSP Circuitry
504
506
120
106
Low-IF Conversion Circuitry
130
LO Generation Circuitry
222
Target Channel
502
IF Code
116
I
Q
104
118
f_{LO}
102
LNA
112
f_{RF}
520

FIG. 5A

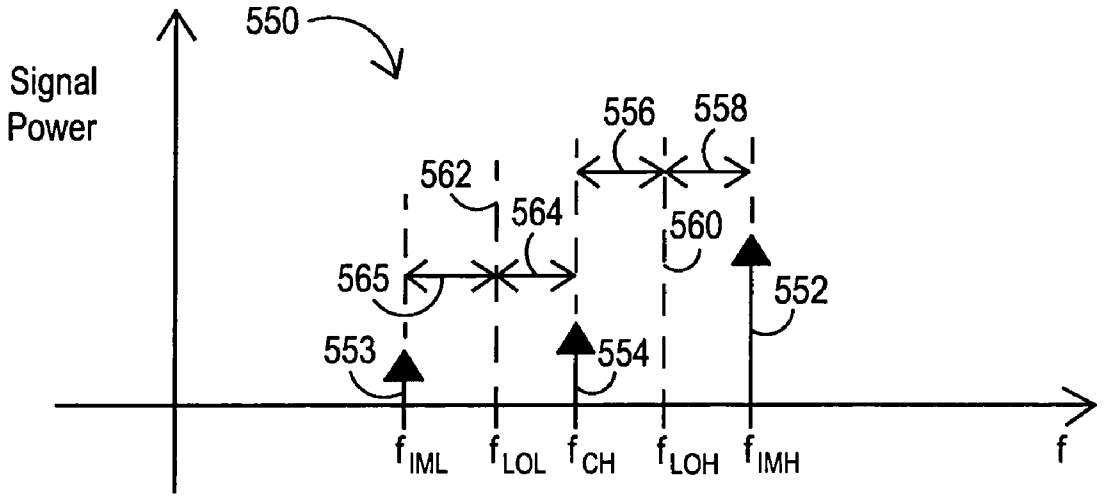
550
Signal Power
556
558
562
564
560
565
552
553
554
f_{IML}
f_{LOL}
f_{CH}
f_{LOH}
f_{IMH}
f

FIG. 5B

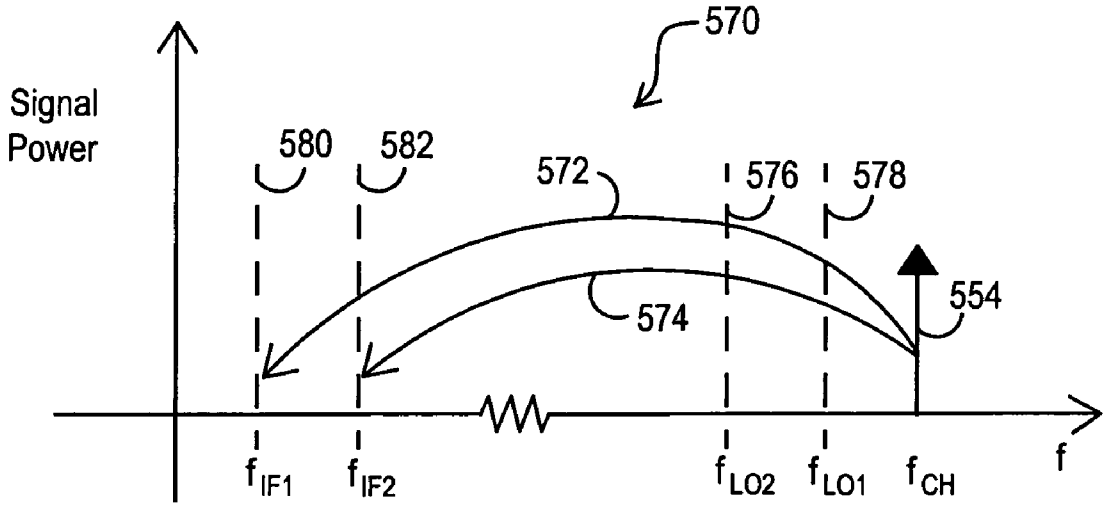
570
Signal Power
580
582
572
576
578
554
574
f_{IF1}
f_{IF2}
f_{LO2}
f_{LO1}
f_{CH}
f

FIG. 5C

INTEGRATED LOW-IF TERRESTRIAL AUDIO BROADCAST RECEIVER AND ASSOCIATED METHOD

TECHNICAL FIELD OF THE INVENTION

This invention relates to receiver architectures for radio-frequency communications. More particularly, the present invention relates to audio broadcast receivers.

BACKGROUND

Radio frequency (RF) receivers are used in a wide variety of applications such as television, cellular telephones, pagers, global positioning system (GPS) receivers, cable modems, cordless phones, radios and other devices that receive RF signals. RF receivers typically require frequency translation or mixing. For example, with respect to FM audio broadcasts, FM radio receivers may translate one broadcast channel in the FM frequency band to an intermediate frequency. Within the United States, FM radios will typically translate FM audio signals, which are broadcast in 200 KHz channels in the frequency band from 88 MHz to 108 MHz, to an intermediate frequency of 10.7 MHz. FM demodulators and stereo decoders can then convert this 10.7 MHz IF signal to demodulated left and right audio signal that can be sent to stereo speakers. Although other countries will have different frequency bands and channel spacing, the reception of audio broadcast signals, such as FM audio broadcasts, is similarly accomplished using RF receivers.

The majority of typical RF receivers perform frequency translation or mixing using an oscillator and an analog multiplier or mixer. An oscillator will typically output a local oscillator (LO) signal in the form of a sine wave or periodic wave having a tuned frequency (f_{LO}). A mixer then mixes the RF input signal spectrum, which includes desired spectral content at a target channel having a particular center frequency (f_{CH}), with the LO signal to form an output signal having spectral content at frequencies equal to the sum and difference of the two input frequencies, namely $f_{CH}+f_{LO}$ and $f_{CH}-f_{LO}$. One of these components forms the channel center frequency translated to the desired IF frequency, and the other component can be filtered out. The oscillator can be implemented with a variety of circuits, including, for example, a tuned inductor-capacitor (LC) oscillator, a charge relaxation oscillator, or a ring oscillator.

The design requirements for any given application for an RF receiver will impact the particular architecture selected for the receiver. And certain applications have difficult design requirements. One such application is for terrestrial audio broadcast receivers and more particularly, such receivers that can be used in small, low-cost portable devices. Such devices include portable stereos, CD players, MP3 players, cell phones and other small portable devices. Current architectures for this portable device environment are often overly expensive as compared to the cost of the portable device itself and, therefore, do not provide an effective, cost-efficient solution.

SUMMARY OF THE INVENTION

The present invention is an integrated low-If (low intermediate frequency) terrestrial audio broadcast receiver and associated method that provide advantageous and cost-efficient solutions that are particularly useful for the portable device environment.

In one embodiment, the present invention is an integrated terrestrial audio broadcast receiver, including a mixer coupled to receive an RF signal spectrum and a mixing signal as inputs and having a low-If signal as an output where the RF input signal spectrum includes a plurality of channels from a terrestrial audio broadcast, local oscillator (LO) generation circuitry coupled to receive a channel selection signal as an input and configured to provide an oscillation signal where the oscillation signal is dependent upon the channel selection signal and being used to generate the mixing signal for the mixer, low-IF conversion circuitry coupled to receive the low-IF signal from the mixer and configured to output a digital signal and a digital-signal-processor (DSP) coupled to receive the digital signal from the low-IF conversion circuitry and configured to output a digital audio signal, wherein the mixer, the LO generation circuitry, the low-IF conversion circuitry, and the DSP are integrated within a single integrated circuit. More particularly, the integrated circuit is made using a process that comprises a CMOS process or consists essentially of a CMOS process.

In another embodiment, the present invention is a portable device having an integrated terrestrial audio broadcast receiver, including a channel selection interface, an audio output interface, and an integrated terrestrial audio receiver of the present invention coupled to the channel selection interface and the audio output interface. In a more particularly, the portable device can include the ability to receive a wide variety of terrestrial audio broadcasts, including AM spectrum and FM spectrum signals.

In a further embodiment, the present invention is a method for tuning terrestrial audio broadcasts in an integrated receiver, including generating an oscillation signal where the oscillation signal is dependent upon a channel selection signal, creating a mixing signal based upon the oscillation signal, mixing an RF input signal spectrum having a plurality of channels from a terrestrial audio broadcast with the mixing signal to generate a low-IF output signal, converting the low-IF output signal to a digital signal, and processing the digital signal to generate a digital audio signal, wherein the generating, creating, mixing, converting and processing steps are performed within a single integrated circuit.

DESCRIPTION OF THE DRAWINGS

It is noted that the appended drawings illustrate only exemplary embodiments of the invention and are, therefore, not to be considered limiting of its scope, for the invention may admit to other equally effective embodiments.

FIG. **1**A is a block diagram of an embodiment for an integrated terrestrial broadcast receiver that utilizes a low-IF architecture.

FIG. **1**B is a more detailed block diagram for circuit blocks in FIG. **1**A.

FIG. **1**C is a block diagram of one example implementation for an integrated terrestrial broadcast receiver including example external components.

FIG. **2**A is a block diagram of an embodiment for an integrated terrestrial broadcast receiver that utilizes a phase lock loop (PLL) and a ratiometric clock to provide mixing signals and digital clock signal for the receiver circuitry.

FIG. **2**B is a block diagram for a ratiometric clock system.

FIG. **3**A is a block diagram of an alternative embodiment for an integrated terrestrial broadcast receiver that utilizes

tuning control circuitry and a ratiometric clock to provide mixing signals and digital clock signal for the receiver circuitry.

FIG. **3**B is a block diagram of an alternative embodiment for an integrated terrestrial broadcast receiver that utilizes a ratiometric digital clock and an external reference clock for digital circuitry.

FIG. **4**A is a block diagram of an embodiment for an integrated terrestrial broadcast receiver that includes both AM broadcast reception and FM broadcast reception.

FIG. **4**B is a block diagram of an embodiment for a portable device that takes advantage of the integrated terrestrial broadcast receiver, according to the present invention.

FIG. **5**A is a block diagram for an embodiment of an integrated terrestrial broadcast receiver that includes local oscillator (LO) control circuitry for adding certain frequency control features.

FIG. **5**B is a signal diagram for one frequency control feature provided by the embodiment of FIG. **5**A, namely high-side versus low-side local oscillator (LO) signal injection.

FIG. **5**C is a signal diagram for another frequency control feature provided by the embodiment of FIG. **5**A, namely programmable intermediate frequency (IF) locations.

DETAILED DESCRIPTION OF THE INVENTION

The present invention provides an integrated low-IF (low intermediate frequency) terrestrial audio broadcast receiver and associated method that provide advantageous and cost-efficient solutions.

FIG. **1**A is a block diagram of an embodiment **100** for an integrated terrestrial broadcast receiver that utilizes a low-IF architecture. The input signal spectrum (f_{RF}) **112** is expected to be a radio frequency (RF) signal spectrum that includes a plurality of channels that can be tuned. It is noted that as used herein, a "radio frequency" or RF signal means an electrical signal conveying useful information and having a frequency from about 3 kilohertz (kHz) to thousands of gigahertz (GHz), regardless of the medium through which such signal is conveyed. Thus an RF signal may be transmitted through air, free space, coaxial cable, fiber optic cable, etc. More particularly, the present invention can provide an advantageous architecture for an FM terrestrial broadcast receiver. For purposes of the description below, therefore, the RF signal spectrum (f_{RF}) **112** will be discussed primarily with respect to the RF signal spectrum (f_{RF}) **112** being an FM terrestrial broadcast spectrum that includes a plurality of different FM broadcasts channels centered at different broadcast frequencies.

Looking back to the embodiment **100** in FIG. **1**A, a low noise amplifier (LNA) **102** receives the RF signal spectrum (f_{RF}) **112**. The output of the LNA **102** is then applied to mixer **104**, and mixer **104** generates real (I) and imaginary (Q) output signals, as represented by signals **116**. To generate these low-IF signals **16**, the mixer **104** uses phase shifted local oscillator (LO) mixing signals (f_{LO}) **118**. The LO generation circuitry **130** includes oscillation circuitry and outputs the two out-of-phase LO mixing signals (f_{LO}) **118** that are used by the mixer **104**. The outputs of mixer **104** are at a low-IF, which can be designed to be fixed or may be designed to vary, for example, if discrete step tuning is implemented for the LO generation circuitry **130**. An example of large step LO generation circuitry that utilizes discrete tuning steps is described in the co-owned and co-pending U.S. patent application Ser. No. 10/412,963, which was filed Apr. 14, 2003, which is entitled "RECEIVER ARCHITECTURES UTILIZING COARSE ANALOG TUNING AND ASSOCIATED METHODS," and which is hereby incorporated by reference in its entirety

Low-IF conversion circuitry **106** receives the real (I) and imaginary (Q) signals **116** and outputs real and imaginary digital signals, as represented by signals **120**. The low-IF conversion circuitry **106** preferably includes band-pass or low-pass analog-to-digital converter (ADC) circuitry that converts the low-IF input signals to the digital domain. And the low-IF conversion circuitry **106** provides, in part, analog-to-digital conversion, signal gain and signal filtering functions. Further digital filtering and digital processing circuitry with the digital signal processing (DSP) circuitry **108** is then used to further tune and extract the signal information from the digital signals **120**. The DSP circuitry **108** then produces baseband digital output signals **122**. When the input signals relate to FM broadcasts, this digital processing provided by the DSP circuitry **108** can include, for example, FM demodulation and stereo decoding. And the digital output signals **122** can be left (L) and right (R) digital audio output signals **122** that represent the content of the FM broadcast channel being tuned, as depicted in the embodiment **100** of FIG. **1**A. It is noted that the output of the receiver **100** can be other desired signals, including, for example, low-IF quadrature I/Q signals from an analog-to-digital converter that are passed through a decimation filter, a baseband signal that has not yet be demodulated, multiplexed L+R and L−R audio signals, L and R analog audio signals, and/or any other desired output signals.

It is noted that as used herein low-IF conversion circuitry refers to circuitry that in part mixes the target channel within the input signal spectrum down to a fixed IF frequency, or down to a variable IF frequency, that is equal to or below about three channel widths. For example, for FM broadcasts within the United States, the channel widths are about 200 kHz. Thus, broadcast channels in the same broadcast area are specified to be at least about 200 kHz apart. For the purposes of this description, therefore, a low-IF frequency for FM broadcasts within the United States would be an IF frequency equal to or below about 600 kHz. It is further noted that for spectrums with non-uniform channel spacings, a low-IF frequency would be equal to or below about three steps in the channel tuning resolution of the receiver circuitry. For example, if the receiver circuitry were configured to tune channels that are at least about 100 kHz apart, a low-IF frequency would be equal to or below about 300 kHz. As noted above, the IF frequency may be fixed at a particular frequency or may vary within a low-IF range of frequencies, depending upon the LO generation circuitry **130** utilized and how it is controlled.

It is further noted that the architecture of the present invention can be utilized for receiving signals in a wide variety of signal bands, including AM audio broadcasts, FM audio broadcasts, television audio broadcasts, weather channels, and other desired broadcasts. The following table provides example frequencies and uses for various broadcast bands that can be received by the integrated terrestrial broadcast receiver of the present invention.

TABLE 1

EXAMPLE FREQUENCY BANDS AND USES

FREQUENCY	USES/SERVICES
150-535 kHz	European LW radio broadcast 9 kHz spacing
535-1700 kHz	MW/AM radio broadcast U.S. uses 10 kHz spacing European uses 9 kHz spacing
1.7-30	SW/HF international radio broadcasting
46-49	Cordless phones and 'baby monitors', remote control
59.75 (2)	U.S. TV Channels 2-6 (VHF_L)
65.75 (3)	6 MHz channels at 54, 60, 66, 76, 82
71.75 (4)	Audio carrier is at 5.75 MHz (FM MTS)
81.75 (5)	
87.75 (6)	
47-54 (E2)	European TV
54-61 (E3)	7 MHz channels, FM sound
61-68 (E4)	Band I: E2-E4
174-181 (E5)	Band III: E5-E12
181-188 (E6)	
188-195 (E7)	
195-202 (E8)	
202-209 (E9)	
209-216 (E10)	
216-223 (E11)	
223-230 (E12)	
76-91	Japan FM broadcast band
87.9-108	U.S./Europe FM broadcast band 200 kHz spacing (U.S.) 100 kHz spacing (Europe)
162.550 (WX1)	U.S. Weather Band
162.400 (WX2)	7 channels, 25 kHz spacing
162.475 (WX3)	SAME: Specific Area Message Encoding
162.425 (WX4)	
162.450 (WX5)	
162.500 (WX6)	
162.525 (WX7)	
179.75 (7)	U.S. TV Channels 7-13 (VHF_High) 6 MHz channels at 174, 180, 186, 192, 198, 204, 210
215.75 (13)	FM Sound at 5.75 MHz
182.5 (F5)	French TV F5-F10 Band III 8 MHz channels
224.5 (F10)	Vision at 176, 184, 192, 200, 208, 216 MHz AM sound at +6.5 MHz
470-478 (21)	Band IV - TV Broadcasting Band V - TV Broadcasting
854-862 (69)	6 MHz channels from 470 to 862 MHz UK System I (PAL): Offsets of +/−25 kHz may be used to alleviate co-channel interference AM Vision carrier at +1.25 (Lower Sideband vestigial) FMW Sound carrier at +7.25 Nicam digital sound at +7.802 French System L (Secam): Offsets of +/−37.5 kHz may be used. AM Vision carrier at +1.25 (inverted video) AM Sound carrier at +7.75 Nicam digital sound at +7.55
470-476 (14)	U.S. TV Channels 14-69 6 MHz channels
819-825 (69)	Sound carrier is at 5.75 MHz (FM MTS) 14-20 shared with law enforcement

FIG. **1**B is a more detailed block diagram for the low-IF circuitry **106** and the DSP circuitry **108** of FIG. **1**A where the receiver circuitry is utilized for an integrated FM terrestrial broadcast receiver. More particularly, in the embodiment **150** of FIG. **1**B, the low-IF circuitry **106** includes variable gain amplifiers (VGAs) **152** and **154** that receive the real (I) and imaginary (Q) signals **116** that have been mixed down to a low-IF frequency by mixer **104**. The output of VGA **152** is then converted from low-IF to the digital domain using band-pass ADC **158**. Similarly, the output of VGA **154** is converted from low-IF to the digital domain using band-pass ADC **156**. Together, the ADCs **156** and **158** produce the real (I) and imaginary (Q) digital output signals **120**. The DSP circuitry **108** conducts digital processing in the digital domain to further tune the target channel. More particularly, the low-IF DSP circuitry **108** utilizes a channel selection filter, as represented by the channel filter block **162**, to further tune the target channel. As indicated above, the DSP circuitry **108** can also implement digital processing to provide FM demodulation of the tuned digital signals, as represented by FM DEMOD block **166**, and can implement stereo decoding, such as MPX decoding, as represented by stereo decoder block **164**. In addition, embodiment **150** can tune and decode RDS (Radio Data System) and/or RBDS (radio broadcast data System) information utilizing in part the RDS/RBDS decoder **168** within the DSP circuitry **108**. The output signals from the low-IF DSP circuitry **108** are left (L) and right (R) digital audio signals **122**. If desired, integrated digital-to-analog converters (DACs), such as DACs **170** and **172**, can be utilized to convert these digital audio signals to left (L) and right (R) analog audio signals **212**. It is also noted that, if desired, ADCs **156** and **158** could also be implemented as complex bandpass ADCs, as real low-pass ADCs, or as any other desired ADC architecture.

As indicated above, the architectures of the present invention are advantageous for small, low-cost portable devices and are particularly advantageous for such devices that need to receive terrestrial audio broadcasts, such as FM broadcasts. In particular, the LO generation circuitry **130**, the mixer **104**, the low-IF conversion circuitry **106** and the DSP circuitry **108** are preferably all integrated on the same integrated circuit. In addition, the LNA **102** and other desired circuitry can also be integrated into the same integrated circuit. This integrated circuit can be made, for example, using a CMOS process, a BiCMOS process, or any other desired process or combination of processes. In this way, for example, a single integrated circuit can receive a terrestrial broadcast signal spectrum and output digital or analog audio signals related to a tuned terrestrial broadcast channel. Preferably, the integrated circuit is a CMOS integrated circuit, and preferably an integrated CMOS terrestrial broadcast receiver of the present invention is configured in a 4×4 mm 24-pin micro lead-frame (MLP) package to provide advantageous cost, size and performance features for small, portable devices, such as cellular handsets, portable audio devices, MP3 players, portable computing devices, and other small, portable devices.

Power consumption is an additional concern with such small, portable devices. The integrated receiver architecture of the present invention advantageously provides for reduced power consumption and allows for the use of power supplies with different ranges to power the integrated receiver. In particular, the present invention allows for low current consumption of less than or equal to 30 mA (milliAmps) of supply current. In addition, the level of integration provided by the present invention allows for a small package size and reduced number of external components that is less than or equal to about six (6) external components.

FIG. **1**C is a block diagram of one example embodiment **175** for an integrated terrestrial broadcast receiver **196**. In the embodiment depicted, the integrated receiver **196** includes an AM antenna and an FM antenna. The FM antenna **111** provides a differential FM input signal, which is represented by signals FMIP (FM input positive) and FMIN (FM input negative), to a first low noise amplifier (LNA) **102**A. The FMIN node is coupled to ground **113**. The AM antenna **115** provides a differential AM input signal,

which is represented by signals AMIP (AM input positive) and AMIN (AM input negative), to a second low noise amplifier (LNA) **102**B. The AMIN node is coupled to ground **113**. The AM antenna **115**, as depicted, is a ferrite bar antenna, and the AM reception can be tuned using an on-chip variable capacitor circuit **198**. The connection between the on-chip variable capacitor circuit **198** and the AM antenna **115** is represented by the AMCAP signal. It is also noted that the FM antenna reception can also be tuned with an on-chip variable capacitor circuit, if desired. With respect to the power supply for the integrate receiver **196**, an integrated supply regulator (LDO) block **185** can be provided to help regulate the on-chip power.

As with FIG. **1**A, the outputs of the LNAs **102**A and **102**B are processed by mixer **104** to generate real (I) and an imaginary (Q) signals. These signals are then processed by a programmable gain amplifier (PGA) **176**, which is controlled by the automatic gain control (AGC) block **180**. The output signals from the PGA **176** are then converted to digital I and Q values with I-path ADC **158** and Q-path ADC **156**. DSP circuitry **108** then processes the digital I and Q values to produce left (L) and right (R) digital audio output signals that can be provided to the digital audio block **194**. In addition, these left (L) and right (R) digital audio output signals can be processed with additional circuitry, as represented by digital-to-analog conversion (DAC) circuits **170** and **172**, to produce left (LOUT) and right (ROUT) analog output signals. These analog output signals can then be output to listening devices, such as headphones. Amplifier **178** and speaker outputs **177**A and **177**B, for example, can represent headphones for listening to the analog audio output signals. As described above with respect to FIG. **1**B, the DSP circuitry **108** can provide a variety of processing features, including digital filtering, FM and AM demodulation (DEMOD) and stereo/audio decoding, such as MPX decoding. Low-IF block **186** includes additional circuitry utilized to control the operation of the DSP circuitry **108** in processing the digital I/Q signals.

A digital control interface **190** can also be provided within integrated receiver **196** to communicate with external devices, such as controller **192**. As depicted, the digital communication interface includes a power-down (PDN_) input signal, reset (RST_) input signal, a bi-directional serial data input/output (SDIO) signal, a serial clock input (SCLK) signal, and a serial interface enable (SEN) input signal. As part of the digital interface, digital audio block **194** can also output digital audio signals to external devices, such as controller **192**. As depicted, this communication is provided through one or more general programmable input/output (GPIO) signals. The GPIO signals represent pins on the integrated receiver **196** that can be user programmed to perform a variety of functions, as desired, depending upon the functionality desired by the user. In addition, a wide variety of control and/or data information can be provided through the interface **190** to and from external devices, such as controller **192**. For example, a RDS/RBDS block **187** can report relevant RDS/RBDS data through the control interface **190**. And a receive strength quality indicator block (RSQI) **188** can analyze the receive signal and report data concerning the strength of that signal through the control interface **190**. It is noted that other communication interfaces could be used, if desired, including serial or parallel interfaces that use synchronous or asynchronous communication protocols.

Looking back to the mixer **104** of FIG. **1**C, LO mixing signals are received by mixer **104** from a phase shift block (0/90) **132** that produces two mixing signals that are 90 degrees out of phase with each other. The phase shift block **132** receives an oscillation signal from frequency synthesizer (FREQ SYNTH) **182**. Frequency synthesizer **182** receives a reference frequency from reference frequency (REF) block **183** and a control signal from automatic frequency control (AFC) block **181**. An external crystal oscillator **184**, operating, for example, at 32.768 kHz, provides a fixed reference clock signal to the reference frequency (REF) block **183** through connections XTAL**1** and XTAL**2**. The AFC block **181** can receive tuning error signal from the receive path circuitry within the integrate receiver **196** and provide a correction control signal to the frequency synthesizer **182**. The use of such an error correction signal is discussed in further detail below.

FIGS. **2**A, **2**B, **3**A and **3**B will now be discussed. These figures provide additional embodiments for receivers according to the present invention that utilize ratiometric clock systems for mixing circuitry and digital circuitry located on the same integrated circuit. The generated clock signals are deemed ratiometric because the are all divisors or multiples of at least one common clock signal. As discussed below, such ratiometric clock signals can be generated by first producing a base oscillation signal that is then utilized to generate a plurality of dependent clock signals through dividers or multipliers, such that the clock signals are all ratiometric with respect to each other.

FIG. **2**A is a block diagram for an embodiment **200** of an integrated terrestrial broadcast receiver that utilizes a frequency synthesizer **209** and ratiometric clock signals to provide LO mixing signals (f_{LO}) **118** and a digital clock signal (f_{DIG}) **205** for the receiver circuitry. As with FIG. **1**A, an RF input signal spectrum (f_{RF}) **112** is received by a low noise amplifier (LNA) **102** and processed by mixer **104** to generate real (I) and imaginary (Q) signals **116**. Low-IF conversion circuitry **106** and DSP circuitry **108** processes these signals to produce left (L) and right (R) digital audio output signals **122**. In addition, as shown in FIG. **1**B, these left (L) and right (R) digital audio output signals **122** can be processed with additional circuitry, as represented by digital-to-analog conversion (DAC) circuits **170** and **172**, to produce left (L) and right (R) analog output signals **212**.

As further depicted in embodiment **200** of FIG. **2**A, a phase shift block **132** can be utilized, and this phase shift block **132** can be a divide-by-two block that produces two mixing signals **118** that are 90 degrees out of phase with each other. The use of two mixing signals 90 degrees out of phase is the typical technique for generating mixing signals for mixers, such as mixer **104**, to produce real (I) and imaginary (Q) signals, such as signals **116**. If desired, phase shift block **132** may also be a divide-by-three block that produces two mixing signals that are 120 degrees out of phase with each other. Depending upon the implementation of the phase shift block **132**, the processing provided by the low-IF conversion circuitry **106** and the DSP circuitry **108** will change accordingly. It is also noted that more generally block **132** represents quadrature generation circuitry that can be implemented in a number of different ways to achieve mixing signals **118** for the mixer **104**. In addition, if desired, the function of block **132** could be included within other blocks represented in FIG. **2**A and FIGS. **3**A-**3**B.

In the embodiment **200** depicted, the LO generation circuitry includes a frequency synthesizer **209**, a divide-by-X block (÷X) **204**, and quadrature generation circuitry or phase shift block **132**. Phase shift block **132** provides phase shifted LO mixing signals **118** to mixer **104**. The frequency synthesizer **209** generates an output signal (f_{OSC}) **252** that is at a desired frequency. The frequency synthesizer **209** can be

implemented in a variety of ways, including the use of a phase locked loop (PLL), a frequency locked loop (FLL) or some other desired oscillation generation circuitry. The frequency of the output signal (f_{OSC}) **252** is determined by control circuitry that utilizes a target channel input signal (TARGET CHANNEL) **222** to select the desired output frequency. As discussed further below, the frequency of this target channel signal **222** can be correlated to an integer (N) that is selected based upon the desired channel. The frequency synthesizer **209** also utilizes an input reference frequency (f_{REF}) **206** in generating an output signal (f_{OSC}) **252** at the desired frequency. The output signal (f_{OSC}) **252** is then passed through the divide-by-X block (÷X) **204** to generate an output signal **117** that is used to generate the desired LO mixing signals (f_{LO}) **118** for the mixer **104**. If desired, and as discussed in more detail below, a band selection signal (BAND SELECTION) **207** can be utilized and can be applied to divide-by-X block (÷X) **204**. This band selection signal **207** can be utilized to adjust the tuning band for the receiver **200**. For example, the tuning band could be adjusted from the FM broadcast band to the AM broadcast band. In this way, a single receiver can be used to tune channels within multiple broadcast bands.

Advantageously, the output signal (f_{OSC}) **252** can also be used to produce the digital clock signal (f_{DIG}) **205** utilized by digital circuitry within the low-IF conversion circuitry **106**, the DSP circuitry **108**, and the DACs **170** and **172**. In this way, the digital clock signal (f_{DIG}) **205**, other clock signals based upon the digital clock signal (f_{DIG}) **205**, the LO mixing signals **118**, the output signal (f_{OSC}) **252**, and intervening clock nodes are all at frequencies that are divisors or multiples of each other or of a common base clock signal thereby making the clock signals ratiometric. To produce the digital clock signal (f_{DIG}) **205**, the output signal (f_{OSC}) **252** is passed through a divide-by-Y block (÷Y) **202**. By using the output signal (f_{OSC}) **252** to generate both the LO mixing signals **118** for the mixer **104** and the digital clock signal (f_{DIG}) **205**, these two resulting signals become ratiometric, thereby tending to limit potential interference between the two signals because digital harmonics of these signals will tend to fall on the frequency of the oscillation signal (f_{OSC}) **252**. Previous systems typically used an external reference clock to drive a digital clock signal on a separate integrated circuit from the mixing circuitry. If such systems then attempted to integrate the mixer and digital circuitry into the same integrated circuit, performance-degrading interference would typically be generated. In contrast, the ratiometric clock feature of the present invention reduces undesirable interference and allows for improved performance of an integrated receiver.

FIG. **2**B is a block diagram for the basic structure of a ratiometric clock system **250** and sets forth the basic elements for the ratiometric clock of the present invention. An input oscillation signal (f_{OSC}) **252** is received by system **250**. This oscillation signal (f_{OSC}) **252** can be generated using a wide variety of different circuits. For example, a PLL could be utilized to provide the oscillation signal (f_{OSC}) **252** that is used to generate LO mixing signals **118** and the digital clock signal (f_{DIG}) **205**. In FIG. **3**A, which is discussed below, a voltage controlled oscillator (VCO) **314** is used to generate an oscillation signal (f_{VCO}) **315** that is used to generate LO mixing signals **118** and the digital clock signal (f_{DIG}) **205**. The VCO **314** can be controlled as part of a PLL, for example, or through a frequency locked loop control algorithm implemented within the tuning control circuitry **312**. In short, the ratiometric clock of the present invention can be utilized with a wide range of circuits that can produce the starting oscillation signal from which a plurality of other ratiometric clock signals are generated.

Looking back to the example of FIG. **2**B, it is seen that a first and second divider circuits are used to generate two ratiometric clock signals. In particular, as depicted, divide-by-X block (÷X) **204** receives the input oscillation signal (f_{OSC}) **252** and outputs signal **117**. This output signal **117** is processed by quadrature generation (QUAD GEN) circuitry **132** to generate the two LO mixing signals (f_{LO}) **118** that can be used by mixer **104**. Divide-by-Y block (÷Y) **202** receives the input oscillation signal (f_{OSC}) **252** and outputs a digital clock signal (f_{DIG}) **205** that can be used to generate digital clock signals used by integrated digital circuitry, such as digital circuitry within the low-IF conversion circuitry **106** and DSP circuitry **108**. It is noted that other ratiometric clock signals could be generated if desired and that the ratiometric clocks generated could be utilized for other purposes if desired. And it is noted that the mixer circuitry and the digital circuitry that use these ratiometric clock signals, along with the ratiometric clock system **250**, would preferably be integrated into the same integrated circuit.

In operation, as stated above, the ratiometric clock feature of the present invention helps to reduce undesired interference because the mixing signals and the digital clock signals are divisors or multiples of each other or of a common base clock signal. Along with the integer N related to the target channel signal **222**, the divide values X and Y provide programmable control of the clock signals being utilized. For example, the following equations can be used to represent the circuitry presented in FIG. **3**A, which is discussed in more detail below, and the ratiometric values for the oscillation output signal (f_{OSC}) **252**, the digital clock signal (f_{DIG}) **205**, and the LO mixing signals (f_{LO}) **118** (assuming a divide-by-two quadrature generator is utilized), which are all based upon the reference frequency (F_{REF}) **206**.

$$f_{VCO}=(f_{REF}/R)\cdot N$$

$$f_{signal\ 117}=f_{VCO}/X=(f_{REF}\cdot N)/(R\cdot X)$$

$$f_{LO}=f_{signal\ 117}/2=(f_{REF}/N)/(2\cdot R\cdot X)$$

$$f_{DIG}=f_{VCO}/Y=(f_{REF}/N)/(R\cdot Y)$$

$$f_{VCO}=f_{LO}\cdot(2\cdot X)=f_{DIG}\cdot Y$$

The values of N, R, X and Y can then be selected and controlled to achieve the desired frequencies for these signals. And the selection criteria for the values of N, R, X and Y can be implemented as desired. For example, these values can be selected according to an on-chip look-up table or could be set through a user-configurable register. As shown in FIG. **3**A, an error signal (ERROR) **322** may also be generated, for example, using the DSP circuitry **108**, that identifies errors in tuning the received signal. This error signal can then be used to modify the N value in order to reduce frequency error essentially to zero when tuning a received signal.

As an example for an FM spectrum, the reference frequency (f_{REF}) **206** can be selected to be 32.768 kHz. The low-IF target frequency can be selected to be about 200 KHz. X can be selected to be 12. Y can be selected to be 100. N and R can be selected to vary depending upon the FM channel to be tuned. For example, for a desired FM channel to be tuned that is centered at about 100 MHz, N can be selected to be 73096 with R considered nominally to be equal to 1. With these numbers selected, the oscillation signal (f_{OSC}) **252** would be 2.395 GHz. The digital clock

signal (f_{DIG}) **205** would be 23.95 MHz. The output signal **117** would be 199.6 MHz. And the LO mixing signals (f_{LO}) **118** to mixer **104** would be 99.8 MHz. The mixer **104** would then mix the input signal spectrum **112** (f_{RF}) with the mixing signals **118** from phase block **132** to mix the desired FM channel at 100 MHz to a low-IF target frequency of about 200 kHz (i.e., 100.0 MHz-99.8 MHz component ends up at about 200 kHz). The appropriate N value for each channel with the FM broadcast spectrum could then be similarly selected such that the mixer **104** mixes the desired channel down to the target IF frequency. It is noted that the values for X and Y could also be modified, if desired. And it is noted that the target IF frequency could be a variable frequency, for example, if discrete tuning steps were used for the LO generation circuitry.

In addition, as indicated above, the divide-by-X block (÷X) can also receive the band selection signal (BAND SELECTION) **207**. This signal can be used to select the frequency band within which the receiver is tuning channels. For example, the oscillation output signal (f_{OSC}) **252** can be a signal at about 2-3 GHz or greater, and the band selection signal (BAND SELECTION) **207** can be used to select what values are used for X, thereby determining the tuning range for the receiver. This technique is useful because many oscillators have a good operating range from minimum to maximum frequency that differ by a factor of about 1.3. Thus, the FM spectrum from 88.1 to 107.9 can be tuned using a single on-chip oscillator because this correlates to oscillation output signal (f_{OSC}) **252** of about 2.114 GHz to 2.590 GHz, assuming the value of 12 for X, and this range is within a factor of 1.3 from minimum to maximum frequencies. However, if additional broadcast spectrums were desired to be tuned, this single on-chip oscillator would have to operate outside of its good operating range, unless other factors were modified. With the architecture described above, the values for X (and N) can be adjusted to move the resulting tuning range into the desired frequency band while still using the same on-chip oscillator.

FIG. **3**A is a block diagram of an alternative embodiment **300** for an integrated terrestrial broadcast receiver that utilizes tuning control circuitry **312** and a ratiometric clock system to provide an LO mixing signals (f_{LO}) **118** and a digital clock signal (f_{DIG}) **205** for the receiver circuitry. As with FIGS. **1** and **2**A, an RF input signal spectrum (f_{RF}) **112** is received by a low noise amplifier (LNA) **102** and processed by mixer **104** to generate real (I) and an imaginary (Q) signals **116**. Low-IF conversion circuitry **106** and DSP circuitry **108** process these signals to produce left (L) and right (R) digital audio output signals **122**. In addition, as shown in FIG. **2**A, these left (L) and right (R) digital audio output signals **122** can be processed with additional circuitry, as represented by digital-to-analog conversion (DAC) circuits **170** and **172**, to produce left (L) and right (R) analog output signals **212**. Also, as in FIG. **2**A, the LO input signal (f_{LO}) **118** and the digital clock signal (f_{DIG}) **205** can be generated as ratiometric clock signals using divide-by-X block (÷X) **204** and divide-by-Y block (÷Y) **202**. And a band selection signal (BAND SELECTION) **207** can also be applied to divide-by-X block (÷X) **204**, if desired. In addition, a quadrature generator or phase shift block **132** provides phase shifted mixing signals **118** to mixer **104**.

As depicted in more detail in FIG. **3**A, dotted line **304** represents the digital circuitry within a single integrated circuit, such as digital circuitry within the low-IF conversion circuitry **106**, DSP circuitry **108** and the DACs **170** and **172**. In particular, analog-to-digital converter (ADC) **156** and ADC **158** represent the analog-to-digital conversion circuitry that produces the real (I) and imaginary (Q) digital signals **120**. ADC **156** and ADC **158** utilize a sampling clock signal based upon the digital clock signal (f_{DIG}) **205**. Similarly, the circuitry within the DSP circuitry **108** utilizes clock signals based upon the digital clock signal (f_{DIG}) **205**. In contrast with the embodiment **200** of FIG. **2**A, in the embodiment **300** of FIG. **3**A, it is shown that the digital clock signal (f_{DIG}) **205** can be selected through a multiplexer (MUX) **328** to be a ratiometric clock signal **329** or an external reference clock signal (f_{REF_FIXED}) **320**. Although it is desirable for the ratiometric clock signal **329** to be utilized in order to reduce performance degrading interference, an external reference clock signal, such as clock signal (f_{REF_FIXED}) **320** could be used, if desired. In addition, if desired, rather than being selected through MUX **328**, the clock signal (f_{REF_FIXED}) **320** could be used as a separate clock source in addition to the digital clock signal (f_{DIG}) **205** for digital circuitry **304**. For example, a switch **321** could be used to supply the clock signal (f_{REF_FIXED}) **320** directly to the digital circuitry **304** so that both the clock signal (f_{REF_FIXED}) **320** and the ratiometric clock signal **329** could be utilized by the digital circuitry **304**. Such an embodiment is also described in more detail with respect to FIG. **3**B below. It is further noted that the digital clock signal (f_{DIG}) **205** from the MUX **328** and the reference clock signal (f_{REF_FIXED}) **320** could be passed through additional dividers, multipliers or other clock generation circuits before being utilized as clock signals for the digital circuitry **304** within the low-IF conversion circuitry **106** and the DSP circuitry **108**. And one or more different clock signals could be generated for use with the different circuit blocks within the digital circuitry **304**.

The tuning control circuitry **312** of FIG. **3**A controls a voltage controlled oscillator (VCO) **314**, which in turn generates an oscillation signal (f_{VCO}) **315** that is used to generate the ratiometric clock signals. The tuning control circuitry **312** receives a target channel signal (TARGET CHANNEL) **222**, which represents the desired channel to be tuned, receives the oscillation signal **315** from the VCO **314** as a feedback signal, and receives a reference frequency signal (f_{REF}) **206**. As discussed above, the target channel signal **222** can be correlated to an integer (N) that is selected based upon the desired channel. Divider blocks, represented by divide-by-N block (÷N) **316** and divide-by-R block (÷R) **318**, have values that are selected based upon the target channel signal (TARGET CHANNEL) **222** to control the coarse and fine tune signals **317** and **319**. More particularly, the value for N corresponds to the desired target channel, assuming R has a nominal value of 1. In the embodiment depicted, the fine tune signal (FINE TUNE) **319** and the coarse tune signal (COARSE TUNE) **317** are 10-bit control signals. It is noted that the coarse and fine tune signals **317** and **319** can be signals of any desired bit size, can be of different sizes, and can be variable or analog signals, if desired. Other control signals could also be utilized, as desired, depending upon the VCO circuitry utilized for VCO **314**. It is further noted that the VCO circuitry represented by block **314** can be implemented using a number of different oscillator circuits. Example oscillator circuitry that can be utilized is described in U.S. Pat. No. 6,388,536, which is entitled "METHOD AND APPARATUS FOR PROVIDING COARSE AND FINE TUNING CONTROL FOR SYNTHESIZING HIGH-FREQUENCY SIGNALS FOR WIRELESS COMMUNICATIONS" and which is hereby incorporated by reference in its entirety.

It is also noted that the VCO **314** may preferably have an output frequency equal to or above about 2.3 GHz in order

to reduce interference with other services, such as cell phone operational frequencies. This relatively high output frequency also facilitates an efficient, small integrated circuit where LC tank oscillation circuits are utilized because the LC tank elements can be made relatively small. In particular, with output frequencies for the VCO **314** in this range of being equal to or above about 2.3 GHz, the one or more inductors that would be needed for an LC tank implementation of the VCO **314** can be integrated into the integrated circuit or included with the device package.

In operation, the tuning control circuitry **312** first receives the target channel signal (TARGET CHANNEL) **222** indicating the channel to be tuned within the frequency spectrum of the input signal spectrum (f_{RF}) **112**. The tuning control circuitry **312** places the fine tune signal (FINE TUNE) **319** at a nominal or initial setting, and tuning control circuitry **312** then outputs a coarse tune signal (COARSE TUNE) **317** to provide coarse tuning of the VCO **314**. The tuning control circuitry **312** then adjusts the fine tune signal (FINE TUNE) **319** to fine tune and lock the VCO **314** to the desired oscillation output signal **315**. A feedback signal from oscillation signal **315** is then used to control the tuning of the output from the VCO **314**. In addition, an error signal (ERROR) **322** can also be utilized to help accomplish this tuning. The error signal (ERROR) **322** can represent tuning errors in the received signal, and the tuning control circuitry **312** can use this error signal to automatically adjust the output frequency of the VCO **314** to correct for these tuning errors. Thus, both the feedback signal from the output signal **315** of the VCO **314** and an additional error signal (ERROR) **322** can be utilized by the tuning control circuitry **312** for frequency control.

When the oscillation signal **315** is changed in order to tune a particular desired channel, the digital clock signal (f_{DIG}) **205** will also change in a ratiometric fashion depending upon the selection of the values for X and Y in blocks **204** and **202**, respectively. Similarly, this change in the digital clock signal (f_{DIG}) **205** also happens with changes to the output signal (f_{OSC}) **252** of FIG. **2**A. Because of this change in the digital clock signal (f_{DIG}) **205**, as shown in FIG. **3**A, an LO jump signal (JUMP) **326** can be output by the tuning control circuitry **312** to indicate that a change in the oscillation signal **315** has occurred. Using this LO jump signal (JUMP) **326**, the digital circuitry **304** can utilize compensation routines, if desired, to adjust operation for the ratiometric change in the digital clock signal (f_{DIG}) **205**.

As described above, the X and Y divider blocks in FIGS. **2**A, **2**B, **3**A and **3**B can be changed by program or algorithm control, as desired, to achieve the oscillation frequencies and the ratiometric ratios desired. For example, it is desirable that a change in the oscillation signals **252** and **315** of FIGS. **2**A, **3**A and **3**B correlate to less than a 1% change in the value of the digital clock signal (f_{DIG}) **205**. The values for X and Y in blocks **204** and **202**, therefore, can be selected accordingly. It is noted that an integrated on-chip microcontroller can be utilized to provide control of the dividers and other receiver operation parameters, if desired. And this microcontroller can also be used to implement some or all of the digital processing done by the DSP circuitry **108**.

For additional control, as indicated above, the tuning control circuitry **312** can receive an error signal (ERROR) **322** from the digital circuitry **304**. This error signal (ERROR) **322** from the digital circuitry **304** represents an error signal correlating to noise or interference detected in the receive path due to errors in the tuning of the input signal spectrum (f_{RF}) **112** to the proper channel. The tuning control circuitry **312** can utilize this error signal (ERROR) **322** to adjust the N value within block **316** so as to more finally tune the received signal. Also, additional control signals, as represented by element **325**, can be provided from the DSP circuitry **108** to the LNA **102**, the low-IF conversion circuitry **106**, or other receiver circuitry to provide control for those circuits.

FIG. **3**B is a block diagram of an additional alternative embodiment **350** for an integrated terrestrial broadcast receiver that utilizes a ratiometric digital clock (f_{DIG}) **205** and an fixed external reference clock (f_{REF_FIXED}) **320** for digital circuitry within the integrated receiver. An RF input signal spectrum (f_{RF}) **112** is received by a low noise amplifier (LNA) **102** and processed by mixer **104** to generate real (I) and an imaginary (Q) signals. The signals are then processed with VGAs **152** and **154** and ADCs **158** and **156** to produce digital signals. These digital signals are then provided to an I-path buffer (BUF) **354** and a Q-path buffer (BUF) **352** before being processed by the DSP **108** to generate digital left and right audio signals. The outputs of the DSP **108** are then provided to a left audio signal buffer (BUF) **356** and a right audio signal buffer (BUF) **358**. The outputs of these buffers **356** and **358** can provide the left (L) and right (R) digital audio signals **122**. The outputs of these buffers **356** and **358** can also be provided to DACs **170** and **172** to produce left (L) and right (R) analog audio signals **212**. The clock signals utilized in this embodiment **350** are described in more detail below.

As with earlier embodiments, the LO input signal (f_{LO}) **118** and the digital clock signal (f_{DIG}) **205** can be generated as ratiometric clock signals using divide-by-X block (÷X) **204** and divide-by-Y block (÷Y) **202**. The output of the divide-by-X block (÷X) **204** passes through divide-by-two (÷2) **132** to provide the two out-of-phase LO mixing signals **118**. A frequency synthesizer **182** generates the oscillation signal (f_{OSC}) **252** and is controlled by the automatic frequency control (AFC) block **181**. The AFC block **181** receives an external reference signal (f_{REF}) **206**, a channel selection (CHANNEL) signal **222**, and a tuning correction error (ERROR) signal **322**. These signals are discussed above with respect to FIG. **3**A. In addition, it is noted that the external reference signal (f_{REF}) **206** can be the same signal as the fixed external reference clock (f_{REF_FIXED}) **320** or can be generated from the fixed external reference clock (f_{REF_FIXED}) **320**, if this clock configuration is desired.

The clock signals for the digital circuitry within embodiment **350** are provided using the digital clock signal (f_{DIG}) **205** and the fixed external reference clock (F_{REF_FIXED}) **320**. The fixed external reference clock (f_{REF_FIXED}) **320** can be generated, if desired, by a crystal oscillator (XTAL OSC) **374** operating, for example, at 12.288 MHz. The DSP circuitry **108** can be clocked using the digital clock signal (f_{DIG}) **205**, which is ratiometric with respect to the oscillation signal (f_{OSC}) **252**, as discussed above. Again, by using a ratiometric clock signal to clock the DSP circuitry **108**, interference (as represented by arrow **372**) with the mixing circuitry **104** and other analog circuitry on the integrated circuit is reduced. Rather than be clocked using the digital clock signal (f_{DIG}) **205**, the digital audio output circuitry **362** and the external CODEC **364** are clocked using the fixed external reference clock (F_{REF_FIXED}) **320**. The ADCs and DACs **156**, **158**, **170** and **172** in this embodiment are also clocked using the fixed external reference clock (f_{REF_FIXED}) **320**. Because the DSP **108** and the ADCs and DACs **156**, **158**, **170** and **172** are operating at different clock frequencies, the buffers **352**, **354**, **356** and **358** can be used to buffer the data between the different data rates. These buffers **352**, **354**, **356** and **358** can be, for example, dual port

buffer memories that have the ability to input data at one desired clock rate and output data at another desired clock rate.

This clocking architecture can provide advantages for receiver applications where integrated circuits need to communicate at a specified rate. Audio standards, for example, can require communications to provide audio data at a particular rate, such as 48,000 samples per second (48 ks/s). In the embodiment of FIG. **3**B, the digital audio output circuitry **362** would communicate the left (L) and right (R) digital audio signals **122** to the external CODEC **364** at the specified rate through an external interface **370**. So that the sample rates correlate to the specified communication rates, the ADCs and DACs **156**, **158**, **170** and **172** can also be clocked using the fixed external reference clock (f_{REF_FIXED}) **320**. Although some interference may be generated using these non-ratiometric clock signals, the advantages of correlated sample rates make this architecture advantageous. It is noted that dotted line **360** represents the boundary of the integrated circuit.

FIG. **4**A is a block diagram of an embodiment **450** for an integrated terrestrial broadcast receiver that includes both AM broadcast reception and FM broadcast reception. In the embodiment depicted, input FM broadcast signals **112**A are sent as differential signals to LNA **102**A. The differential output of LNA **102**A is sent to mixer **104**A, which uses LO mixing signals **118**A from LO generation circuitry **130** to produce I and Q signals **116**A. These quadrature FM signals can then processed by the ADC and DSP circuitry integrated within the same integrated circuit. Input AM broadcast signals **112**B are sent to LNA **102**B and then to mixer **104**B. Mixer **104**B uses LO mixing signals **118**B from LO generation circuitry **130** to produce I and Q signals **116**B. These quadrature AM signals can then processed by the ADC and DSP circuitry integrated within the same integrated circuit. In operation, the LO generation circuitry **130** can receive a band selection (BAND SELECTION) signal **207** that allows a selection of which broadcast band is to be processed by the receiver. It is also noted that the LO generation circuitry **130**, if desired, can generate a single set of mixing signals that can be used by both the FM mixer **104**A and the AM mixer **104**B, depending upon the selection made by the band selection signal **207**.

FIG. **4**B is a block diagram of an embodiment **400** for a portable device **402** that utilizes a low-IF integrated terrestrial broadcast receiver **100** according to the present invention. As depicted, the portable device includes a low-IF receiver integrated circuit **100** coupled to a channel selection interface circuitry **404** through connections **412** and to an audio output interface circuitry **406** through connections **410**. The audio output interface circuitry **406** is in turn coupled to listening device **408** through connections **414**. In such a portable environment, the listening device **408** is often headphones that can be easily plugged into the portable device **402**. The embodiment **400** can also include one or more antennas, such as an FM broadcast antenna **420** and an AM broadcast antenna **422**. It is noted that a portable device as contemplated in this embodiment is preferably a small portable device in that it has a volume of about 70 cubic inches or less and has a weight of about 2 pounds or less. For example, as indicated above, the small, portable device **402** could be a cellular phone, an MP3 player, a PC card for a portable computer, a USB connected device or any other small portable device having an integrated terrestrial audio broadcast receiver. It is also noted that the audio output interface **406** can provide digital audio output signals, analog audio output signals, or both. And the interface circuitry **406** and **408** could be combined, if desired, such as would be the case if a single serial or parallel interface were used to provide the communication interface for the portable device **402**.

FIG. **5**A is a block diagram for an embodiment **520** of an integrated terrestrial broadcast receiver that includes local oscillator (LO) control circuitry **500** for adding certain frequency control features. As with the embodiment **100** in FIG. **1**A, an RF input signal spectrum (f_{REF}) **112** is received by a low noise amplifier (LNA) **102** and processed by mixer **104** to generate real (I) and an imaginary (Q) signals **116**. Low-IF conversion circuitry **106** and DSP circuitry **108** processes these signals to produce left (L) and right (R) digital audio output signals **122**. As discussed above with respect to FIG. **1**A, it is again noted that other or different output signals could be provided by the receiver, if desired. In addition, the LO mixing signals (f_{LO}) **118** are generated by LO generation circuitry **130**, and these phase shifted mixing signals **118** are used by mixer **104**, as discussed above.

LO control circuitry **500** is added in FIG. **5**A to implement additional frequency control features. One such feature is a high-side versus low-side LO signal injection selection feature as represented by block (HI/LO INJECTION) **510**. Another feature is a programmable IF location selection feature as represented by block (IF SELECTION) **512**. These frequency control features are discussed in more detail with respect to FIGS. **5**B and **5**C. The LO control circuitry **500** is coupled to the DSP circuitry **108** through one or more signals **504** and to the LO generation circuitry **130** through one or more signals **506**.

FIG. **5**B is a signal diagram for a high-side versus low-side LO signal injection selection feature. In the example **550**, a desired channel (f_{CH}) to be tuned is represented by signal arrow **554**. A larger interference signal (f_{IMH}) is represented by signal arrow **552**. As is well known, mixer **104** will mix the input RF signal spectrum (f_{RF}) **112** to the intermediate frequency (f_{IF}) in accordance with the equation $f_{RF}-f_{LO}=f_{IF}$ if low-side injection is utilized and in accordance with the equation $f_{IF}=f_{LO=fRF}$ if high-side injection is utilized. The designations f_{LOL} and f_{LOH} represent these two possible LO signals for the low-side injection signal (f_{LOL}) **562** and high-side injection signal (f_{LOH}) **560**, respectively. Many systems operate by implementing either high-side injection or low-side injection and do not provide the ability to switch between the two during operation. Some systems have attempted to select between high-side and low-side injection during operation by assessing the level of noise or spurs in the tuned target channel signal after it has been processed through the receive path circuitry.

With the LO control circuitry **500** of the present invention, however, dynamic selection of high-side or low-side injection is implemented by making an assessment of image signal power within the spectrum before the selection of high-side or low-side injection is made and before the desired channel itself has been processed and tuned. This selection can be made, for example, using a selection algorithm that is configured to determine whether high-side injection or low-side injection is preferable based upon the image power at frequencies that are equal in distance from the LO frequencies as the desired channel. By tuning to these frequencies and through signals **504** from the DSP circuitry **108**, for example, the LO control circuitry can assess the signal power at frequencies that could create significant performance-degrading images. In particular, the next adjacent upper image signal power and the next adjacent lower image signal power can be assessed to determine

whether or not to use high-side or low-side injection. And this assessment can be made at power-up across the entire spectrum, periodically across the entire spectrum, across a reduced spectrum that includes the desired channel to be tuned, each time a channel is tuned, or at any other desired time across any desired portion of the spectrum depending upon the algorithm implemented.

Looking back to FIG. **5**B, interference signal (f_{IMH}) **552** represents an upper image signal that is as far from the high-side LO injection signal (f_{LOH}) **560** as is the desired channel (f_{CH}) **554**. If high-side injection were utilized, the mixer would use the high-side injection LO signal (f_{LOH}) **560**, and the interference signal (f_{IMH}) **552** would be mixed onto the intermediate frequency (f_{IF}) along with the desired channel (f_{CH}) **554**. Thus, the use of high-side injection would create a large undesirable image. Similarly, the interference signal (f_{IML}) **553** represents a lower image signal that is as far from the low-side LO injection signal (f_{LOL}) **562** as is the desired channel (f_{CH}) **554**. If low-side injection were utilized, the mixer would use the low-side injection LO signal (f_{LOL}) **562**, and the interference signal (f_{IML}) **553** would be mixed onto the intermediate frequency (f_{IF}) along with the desired channel (f_{CH}) **554**. Thus, the use of low-side injection would create an undesirable image, but the image would have a signal power that was much less than the signal power of the image caused by using high-side LO injection. By assessing the signal power of the upper image frequency and lower image frequency, the LO control circuitry can determine whether high-side injection or low-side injection should be used. In the example **550**, therefore, low-side injection should be used to avoid mixing the larger intefference signal (f_{IMH}) **552** onto the intermediate frequency (f_{IF}). It is noted that the signal power at other frequencies, such as harmonics of the upper and lower image frequencies, could also be assessed, if desired, in determining whether to make the dynamic selection of whether to use high-side injection or low-side injections.

FIG. **5**C is a signal diagram for a programmable IF location selection feature. In the example **570**, a desired channel (f_{CH}) to be tuned is represented by signal arrow **554**, and low-side injection is being used. The LO control circuitry **500** provides programmable selection of the LO signal that will be used by mixer **104** to mix the input RF signal spectrum (f_{RF}) **112** to the intermediate frequency (f_{IF}) in accordance with the equation $f_{RF}-f_{LO}=f_{IF}$. As shown, two selectable IF target frequencies are represented by a first IF target frequency (f_{IF1}) **580** and a second IF target frequency (f_{IF2}) **582**. For a given desired channel (f_{CH}) **554** to be tuned LO signals, therefore, a first LO signal (f_{LO1}) **578** is used if the first IF target frequency (f_{IF1}) **580** has been selected. And the line **572** represents the action of mixer **104** in mixing the desired channel (f_{CH}) **554** down to the first IF frequency (f_{IF1}) **580**. Similarly, a second LO signal (f_{LO2}) **576** is used if the second IF target frequency (f_{IF2}) **582** has been selected. And the line **574** represents the action of mixer **104** in mixing the desired channel (f_{CH}) **554** down to the second IF frequency (f_{IF2}) **582**.

The programmable selection for the LO signal, as shown in the embodiment **520** of FIG. **5**A, is provided through an IF selection signal (IF CODE) **502** that is received by the LO control circuitry **500**. This IF CODE **502** can be based, for example, upon a user programmable on-chip register. Factors for choosing the desired target IF frequency can include the channel width of the RF spectrum of interest or other environmental considerations. For example, if the integrated terrestrial broadcast receiver **520** were intended for use in a variety of countries, a different target IF frequency could be selected for each country. This selection could depend upon the nature of the broadcast spectrum in that country, including the respective channel widths. It is noted that a wide variety of mechanisms could be employed for providing programmable control to the LO control circuitry **500** to select which IF frequency is to be utilized in operation.

Further modifications and alternative embodiments of this invention will be apparent to those skilled in the art in view of this description. It will be recognized, therefore, that the present invention is not limited by these example arrangements. Accordingly, this description is to be construed as illustrative only and is for the purpose of teaching those skilled in the art the manner of carrying out the invention. It is to be understood that the forms of the invention herein shown and described are to be taken as the presently preferred embodiments. Various changes may be made in the implementations and architectures. For example, equivalent elements may be substituted for those illustrated and described herein, and certain features of the invention may be utilized independently of the use of other features, all as would be apparent to one skilled in the art after having the benefit of this description of the invention.

What is claimed is:

1. A portable device having an integrated terrestrial audio broadcast receiver, comprising:

a channel selection interface;

an audio output interface; and

an integrated terrestrial audio FM receiver coupled to the channel selection interface and the audio output interface, the audio receiver comprising:

a mixer coupled to receive a signal spectrum and a mixing signal as inputs and having a low-IF signal as an output, the signal spectrum comprising an FM audio broadcast signal spectrum comprising a plurality of FM channels from terrestrial audio FM broadcasts, the mixer being configured to output real and imaginary low-IF signals;

local oscillator (LO) generation circuitry coupled to receive an FM channel selection signal as an input and configured to provide an oscillation signal, the oscillation signal being dependent upon the FM channel selection signal and being used to generate the mixing signal for the mixer;

quadrature generation circuitry configured to receive the mixing signal from the LO generation circuitry and to generate two phase shifted mixing signals for use by the mixer;

low-IF conversion circuitry coupled to receive the low-IF signals from the mixer and configured to output digital signals, the low-IF conversion circuitry including first and second analog-to-digital converters coupled to the real and imaginary low-IF signals and configured to output real and imaginary digital signals;

a digital-signal-processor (DSP) coupled to receive the digital signal from the low-IF conversion circuitry and configured to demodulate the frequency modulation within the selected FM channel, to decode the FM stereo encoding within the selected FM channel, to digitally tune the selected FM channel, and to output a digital audio signal, the DSP comprising an on-chip microcontroller; and

digital-to-analog converter (DAC) circuitry coupled to receive the digital audio signal from the DSP and configured to output an analog audio signal;

wherein the mixer, the LO generation circuitry, the low-IF conversion circuitry, and the DSP including the micro-controller are integrated within a single integrated circuit; and

wherein the integrated circuit is made using a CMOS process.

2. The portable device of claim **1**, wherein the portable device has a volume of about 70 cubic inches or less and that has a weight of about 2 pounds or less.

3. The portable device of claim **1**, wherein the audio output interface comprises an interface configured to provide a digital audio output signal and the digital audio signal from the DSP is used to provide the digital audio output signal.

4. The portable device of claim **1**, wherein integrated terrestrial audio receiver further comprises input circuitry configured to receive FM audio signals and AM audio signals.

5. The portable device of claim **1**, wherein the integrated circuit is made using a process that consists essentially of a CMOS process.

6. The portable device of claim **1**, wherein the integrated circuit is configured to draw about 30 mA of current or less during operation.

7. The portable device of claim **6**, wherein the integrated circuit within the portable device requires about six or fewer external components.

8. The portable device of claim **1**, wherein the integrated terrestrial audio receiver is configured within a package no larger than 4×4 mm.

9. The portable device of claim **8**, wherein the integrated terrestrial audio receiver further comprises LC tank oscillation circuitry, and wherein inductors for the LC tank are integrated with the integrated terrestrial audio receiver or included within a package for the integrated terrestrial audio receiver or both.

* * * * *