UNITED STATES PATENT AND TRADEMARK OFFICE

BEFORE THE PATENT TRIAL AND APPEAL BOARD

COMCAST CABLE COMMUNICATIONS, LLC,
Petitioner,

v.

ENTROPIC COMMUNICATIONS, LLC,
Patent Owner.

Patent No. 11,785,275
Filing Date: September 30, 2022
Issue Date: October 10, 2023
Title: SYSTEM AND METHOD FOR RECEIVING A TELEVISION SIGNAL

Inter Partes Review No.: IPR2025-00180

PETITION FOR *INTER PARTES* REVIEW
UNDER 35 U.S.C. §§ 311-319 AND 37 C.F.R. § 42.100 *et seq*.

Petition 1 of 3

TABLE OF CONTENTS

I. MANDATORY NOTICES vi

II. INTRODUCTION 1

III. SUMMARY OF ARGUMENT 1

IV. OVERVIEW OF THE ’275 PATENT 2

- A. Brief Description 2
- B. Prosecution History 6
- C. Earliest Priority Date for the Claims 7

V. OVERVIEW OF PRIOR ART 7

- A. Zhang 7
- B. Pandey 9
- C. Zhang ’933 11
- D. Mirabbasi 12
- E. Dong 13

VI. IDENTIFICATION OF CHALLENGE PURSUANT TO 37 C.F.R. § 42.104(b) 14

- A. Claims for Which Review is Requested and Grounds on Which Challenge Is Based 14
- B. 314(a) Discretion Does Not Apply 15
- C. 325(d) Discretion Does Not Apply 17
- D. Level of Ordinary Skill 19
- E. Claim Construction 19
  - 1. “radio front end” 20
  - 2. “digital frontend (DFE)” 20

VII. SPECIFIC GROUNDS FOR UNPATENTABILITY 21

- A. Grounds A and B: Claims 1-3, 5, 7-13, 15, and 17-20 are Anticipated and Rendered Obvious by Zhang 21
  - 1. Independent Claim 1 21
  - 2. Dependent Claims 2-3 and 12-13 38

3. Dependent Claims 5 and 15 42
4. Dependent Claims 7-10 and 17-20 43
5. Independent Claim 11 45
B. Ground C: Claims 2, 3, 12, and 13 are Rendered Obvious by Zhang-Pandey 46
1. Dependent Claims 2 and 3 46
2. Dependent Claims 12 and 13 51
C. Ground D: Claims 2 and 12 are Rendered Obvious by Zhang-Zhang '933 51
D. Ground E: Claims 4 and 14 are Rendered Obvious by Zhang-Mirabbasi 54
E. Ground F: Claims 5-6 and 15-16 are Rendered Obvious by Zhang-Dong 59
1. Dependent Claims 5 and 15 59
2. Dependent Claims 6 and 16 62
F. Alternate Arguments and Grounds based on Means-Plus-Function Construction of "radio front end" and/or "digital frontend" 65
1. Alternate Arguments for Claims 11-13, 15, and 17-20 based on Grounds A/B, for Claims 12-13 based on Ground C, for Claim 12 based on Ground D, and for Claims 15-16 based on Ground F 65
2. Alternate Arguments for Claims 11-15 and 17-20 based on Zhang-Mirabbasi (Ground E) 68
3. Alternate Grounds: Claims 12-13 based on Zhang-Mirabbasi-Pandey (Ground G), Claim 12 based on Zhang-Mirabbasi-Zhang '933 (Ground H), and Claims 15-16 based on Zhang-Mirabbasi-Dong (Ground I) 75
VIII. GROUNDS FOR STANDING & FEE PAYMENT 76
IX. CONCLUSION 76
CERTIFICATION UNDER 37 CFR § 42.24(d) 77
CERTIFICATE OF SERVICE 78
CLAIM LISTING APPENDIX 79

EXHIBITS

Ex. 1001:	U.S. Patent No. 11,785,275 ("the '275 patent")
Ex. 1002:	Expert Declaration of David B. Lett
Ex. 1003:	Curriculum Vitae of David B. Lett
Ex. 1004:	Certified Prosecution History of the '275 patent
Ex. 1005:	Certified Prosecution History of U.S. Patent No. 11,490,152 ("the parent")
Ex. 1006:	Reserved
Ex. 1007:	Certified Prosecution History of U.S. Provisional App. No. 61/170,526 ("'526 provisional")
Exs. 1008-1012:	Reserved
Ex. 1013:	U.S. Pub. No. 2003/0056221 ("Zhang")
Ex. 1014:	U.S. Patent No. 7,237,214 ("Pandey")
Ex. 1015:	Excerpts of "IEEE Std 100-2000, The Authoritative Dictionary of IEEE Standards Terms, Seventh Edition" (IEEE Press. 2000) ("IEEE Std 100")
Ex. 1016:	Excerpts of Jan M Rabaey, "Digital Integrated Circuits: A Design Perspective" (Pearson, 2nd ed. 2002) ("Rabaey")
Ex. 1017:	A. P. Chandrakasan, "Ultra low power digital signal processing," Proceedings of 9th International Conference on VLSI Design, Bangalore, India, 1996, pp. 352-357 ("Chandrakasan")
Ex. 1018:	S. Mirabbasi and K. Martin, "Classical and Modern Receiver Architectures," IEEE Communications Magazine, vol. 38, no. 11, pp. 132-139, November 2000 ("Mirabbasi")
Ex. 1019:	U.S. Patent No. 6,061,406 ("Carson")

Ex. 1020:	Reserved
Ex. 1021:	Data-Over-Cable Service Interface Specifications, DOCSIS 2.0, Radio Frequency Interface Specification, CM-SP-RFIv2.0-I11-060602
Exs. 1022-1024:	Reserved
Ex. 1025:	J. Crols and M. S. J. Steyaert, "Low-IF topologies for high-performance analog front ends of fully integrated receivers," IEEE Transactions on Circuits and Systems II: Analog and Digital Signal Processing, vol. 45, no. 3, pp. 269-282, March 1998 ("Crols")
Ex. 1026:	Reserved
Ex. 1027:	U.S. Patents and Patent Applications Family Tree for the '275 patent
Exs. 1028-1032:	Reserved
Ex. 1033:	Excerpts of W. Ciciora, J. Farmer, D. Large, and M. Adams, "Modern Cable Television Technology: Video, Voice, and Data Communications" (2nd ed. 2004) ("Ciciora")
Ex. 1034:	Excerpts of J. Crols and M. Steyaert, "CMOS Wireless Transceiver Design" (1997)
Ex. 1035:	U.S. Patent No. 7,340,230 ("Khoini-Poorfard")
Ex. 1036:	U.S. Pub. No. 2003/0217362 ("Summers")
Ex. 1037:	U.S. Pub. No. 2006/0256799 ("Eng")
Ex. 1038:	U.S. Pub. No. 2006/0083335 ("Seendripu")
Ex. 1039:	Excerpts of Chris Bowick, "RF Circuit Design" (2nd ed. 2008)
Ex. 1040:	Reserved

Ex. 1041:	Excerpts of Roland Priemer, "Introductory Signal Processing" (1991)
Ex. 1042:	U.S. Patent No. 7,272,375 ("Tuttle")
Ex. 1043:	U.S. Patent No. 7,130,576 ("Gurantz")
Ex. 1044:	U.S. Patent No. 5,278,837 ("Kelley")
Ex. 1045:	Jeffrey Hugh Reed, "Software Radio: A Modern Approach to Radio Engineering" (2002)
Ex. 1046:	U.S. Patent No. 7,213,042 ("Cannon")
Ex. 1047:	Reserved
Ex. 1048:	Excerpts of William Buchanan, "Computer Busses" (2000) ("Buchanan")
Ex. 1049:	U.S. Patent No. 7,079,528 ("Ziegler")
Ex. 1050:	Excerpts of "Software Defined Radio: Enabling Technologies" (Walter H.W. Tuttlebee ed., 2003)
Ex. 1051:	U.S. Pub. No. 2005/0183015 ("Dunton")
Exs. 1052-1072:	Reserved
Ex. 1073:	Expert Declaration of Dr. Sylvia Hall-Ellis
Ex. 1074:	Reserved
Ex. 1075:	U.S. Patent No. 6,791,995 ("Azenkot")
Ex. 1076:	U.S. Patent No. 6,542,203 ("Shadwell")
Ex. 1077:	International Publication No. WO 2004/059933 ("Zhang '933")
Ex. 1078:	U.S. Pub. No. 2004/0250284 ("Dong")
Ex. 1079:	U.S. Patent No. 3,968,444 ("Tenny")

I. MANDATORY NOTICES

Real Parties in Interest (37 C.F.R. § 42.8(b)(1))

The real parties-in-interest for this petition are (i) Comcast Corporation, (ii) Comcast Cable Communications, LLC, and (iii) Comcast Cable Communications Management, LLC. No unnamed entity is funding, controlling, or directing this Petition for *inter partes* review (IPR) of U.S. Patent No. 11,785,275 ("the '275 patent"), or otherwise has an opportunity to control or direct this Petition or Petitioner's participation in any resulting IPR.

Related Matters (37 C.F.R. § 42.8(b)(2))

Office Proceedings

This is the first of three petitions for *inter partes* review filed by Petitioner against the '275 patent. Petitioner has previously filed petitions for *inter partes* review against related U.S. Patent Nos. 9,210,362 ("the '362 patent"), 11,381,866 ("the '866 patent") and 11,399,206 ("the '206 patent"), which include similar claims to claims of the '275 patent. The IPRs against the '362 patent are assigned case numbers: IPR2024-00432, IPR2024-00433, and IPR2024-00434. The IPRs against the '866 patent are assigned case numbers: IPR2024-00435, IPR2024-00436, and IPR2024-00437. The IPRs against the '206 patent are assigned case numbers: IPR2024-00438, IPR2024-00439, and IPR2024-00440. The Board has already instituted IPR2024-00432 (for the '362 patent), IPR2024-00435 (for the '866 patent), and IPR2024-00438 (for the '206 patent). This Petition relies on prior art

(e.g., Zhang, Pandey, and Mirabbasi) that is the same as the prior art relied on in the instituted IPRs. The petitions for the other IPRs challenging the ’362, ’866, and ’206 patents were discretionarily denied institution without addressing the merits of those petitions.

No other Office proceedings (e.g., *inter partes* review, post-grant review, or covered business method) have been filed against the ’275 patent.

According to the Office’s records, a request for *ex parte* reexamination (Control No. 90/019,255) was filed September 20, 2023 for claims 1 and 11 of the ’362 patent, and an Order granting the request was issued on November 1, 2023. The requestor of the *ex parte* reexamination, Unified Patents, LLC, is not a real party-in-interest for this petition.

Litigation matters

Patent Owner has sought leave to assert the ’275 patent in *Entropic Communications, LLC v. Comcast Corporation*, No. 2:23-cv-01050 (C.D. Cal. filed Feb. 10, 2023) and *Entropic Communications, LLC v. Cox Communications, Inc.*, No. 2-23-cv-01049 (C.D. Cal. filed Feb. 10, 2023) (collectively, “CA litigation”). These cases have been consolidated and remain pending. The related ’362 patent, ’866 patent, and ’206 patent have been asserted in the CA litigation.

The related ’362 patent, ’866 patent, and ’206 patent were also asserted in *Entropic Communications, LLC v. Charter Communications, Inc.*, No. 2:22-cv-

00125-JRG (E.D. Tex. filed Apr. 27, 2022) ("TX litigation"), which was dismissed on December 10, 2023.

The '275 patent, as well as the related '866 patent and '206 patent, are asserted in *Entropic Communications, LLC v. Vantiva SA*, No. 2:24-cv-00912 (E.D. Tex. filed Nov. 11, 2024).

Continuity

According to Office records, the '275 patent is a continuation of application No. 17/862,946, filed on Jul. 12, 2022, now Pat. No. 11,490,152, which is a continuation of application No. 17/587,462, filed on Jan. 28, 2022, now Pat. No. 11,399,206, which is a continuation of application No. 17/217,244, filed on Mar. 30, 2021, now abandoned, which is a continuation of application No. 16/430,506, filed on Jun. 4, 2019, now Pat. No. 10,972,781, which is a continuation of application No. 15/792,318, filed on Oct. 24, 2017, now Pat. No. 10,313,733, which is a continuation of application No. 14/948,881, filed on Nov. 23, 2015, now Pat. No. 9,819,992, which is a continuation of application No. 14/617,973, filed on Feb. 10, 2015, now Pat. No. 9,210,363, which is a continuation of application No. 13/962,871, filed on Aug. 8, 2013, now Pat. No. 9,100,622, which is a continuation of application No. 12/762,900, filed on Apr. 19, 2010, now Pat. No. 8,526,898, which claims the benefit of Provisional application No. 61/170,526, filed Apr. 17, 2009.

Also according to Office records, Application No. 18/461,104, filed on Sep. 5, 2023, is a continuation of the ’275 patent.

The ’275 patent is part of a family that includes numerous patents or applications that purport to claim priority from App. No. 12/762,900. A family tree is included as Ex. 1027.

Lead and Back-Up Counsel (37 C.F.R. § 42.8(b)(3))

Petitioner designates counsel listed below. A power of attorney for counsel is being concurrently filed.

Lead Counsel	**Back-Up Counsel**
Frederic M. Meeker (Reg. No. 35,282) fmeeker@bannerwitcoff.com BANNER & WITCOFF, LTD. 1100 13th Street, NW Suite 1200 Washington, DC 20005 Tel: (202) 824-3000 Fax: (202) 824-3001	Craig W. Kronenthal (Reg. No. 58,541) ckronenthal@bannerwitcoff.com H. Wayne Porter (Reg. No. 42,084) wporter@bannerwitcoff.com Paul T. Qualey (Reg. No. 45,027) pqualey@bannerwitcoff.com Joshua L. Davenport (Reg. No. 72,756) jdavenport@bannerwitcoff.com BANNER & WITCOFF, LTD. 1100 13th Street, NW Suite 1200 Washington, DC 20005 Tel: (202) 824-3000 Fax: (202) 824-3001

Please address all correspondence to counsel at this address shown above. Petitioner consents to electronic service by email at the above email addresses and at ComcastIPRService@bannerwitcoff.com.

II. INTRODUCTION

Comcast Cable Communications, LLC ("Petitioner") petitions for *inter partes* review of claims 1-20 of U.S. Patent No. 11,785,275 ("the '275 patent").

III. SUMMARY OF ARGUMENT

The '275 patent generally claims a television receiver and method of operating it to select and output desired channels. The receiver includes a radio front end for processing a radio frequency (RF) input signal that includes desired and undesired channels, an analog-to-digital converter (ADC) that digitizes the RF input signal, and a digital frontend (DFE) that selects the desired channels and outputs the selected channels to at least one demodulator.

The '275 patent admits that the radio front end and ADC portion of the television receiver "is similar to conventional tuners." Ex. 1007, 5; Ex. 1001, 1:6-28. The alleged inventive concept—demodulating multiple digitized channels—simply copies well-known digital circuitry for demodulating each channel. The dependent claims add only well-known features, such as sending data using serial or parallel interfaces, processing cable or satellite channels, storing video, or picture-in-picture. The '275 patent claims are disclosed or rendered obvious by the prior art, e.g., Zhang (Ex. 1013) and other references relied on herein.

Accordingly, claims 1-20 of the '275 patent are unpatentable and should be cancelled.

IV. OVERVIEW OF THE ’275 PATENT

A. Brief Description

The ’275 patent describes a wideband receiver system “capable of receiving multiple radio frequency channels located in a broad radio frequency spectrum.” Ex. 1001, 1:32-35; Ex. 1002, ¶36. Figure 2 is a “block diagram of a wideband receiver system 200.” *Id.*, 4:40-42; Ex. 1002, ¶37.

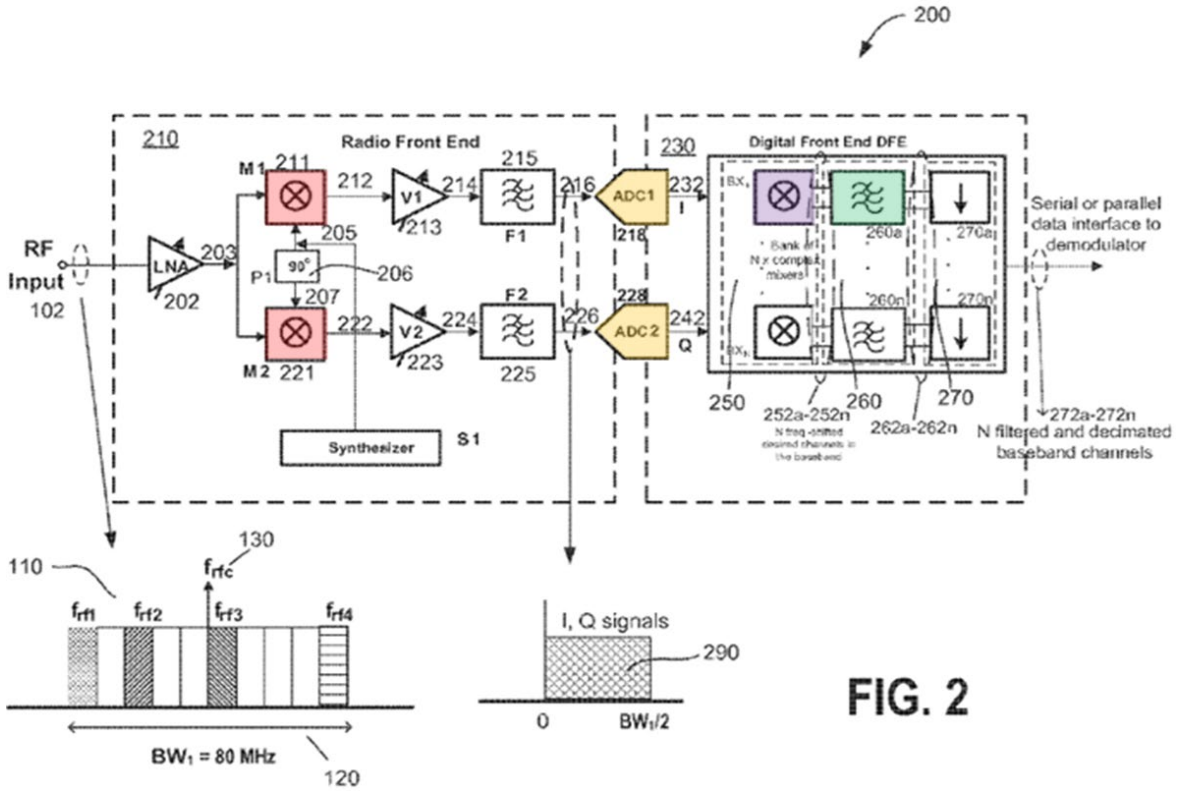

FIG. 2

Ex. 1001, Fig. 2 (annotated)

The wideband receiver system receives both desired and undesired television channels as frequencies dispersed within a frequency bandwidth BW_1. Ex. 1001, Abstract, 4:43-58; Ex. 1002, ¶38. A “radio front end” contains mixers (shown in **red**) that “generate an in-phase signal 212 and a quadrature signal 222 that have a

phase shift of 90˚ degrees between them" and have been downconverted to "the baseband or low intermediate frequency (IF) band."[1] Ex. 1001, 4:65-5:4, 2:64-3:1, *see* also 2:10-12. "[U]nwanted frequency components" are filtered from the in-phase and quadrature signals by filters 215 and 225. Ex. 1001, 5:22-29. The filtered signals are then individually digitized by wideband analog-to-digital converters ADC1 and ADC2 (shown in **gold**) to generate a digital in-phase (I) signal 232 and digital quadrature (Q) signal 242. Ex. 1001, 3:1-3, 5:53-56. U.S. Provisional App. No. 61/170,526 ("'526 provisional"), which the '275 patent incorporates by reference, admits that the left side of Figure 2 (up to and including ADC1 and ADC2) "is similar to conventional tuners." Ex. 1007, 5; Ex. 1001, 1:6-28; Ex. 1002, ¶38.

The digital I and Q signals 232 and 242 are input to a digital front end 230, containing a bank of N complex mixers 250 (one is **purple** above), where N is "the

[1] A mixer multiplies an input signal (frequency f_1) by a reference signal (frequency f_2) to produce new signals at the sum and difference frequencies (f_1+f_2 and f_1-f_2). Ex. 1002, ¶67. The reduced frequency (f_1-f_2) version is output as the "down converted" complex signal with real (I) and imaginary (Q) components. Ex. 1002, ¶68.

number of desired RF channels."[2] Ex. 1001, 5:56-60. "Each of the N complex mixers … extract a different one of the desired channels" from the I and Q signals 232 and 242 and "frequency-shifts the extracted signals to the baseband frequency."[3] Ex. 1001, 6:8-11. The output of each mixer 250 leads to an associated filter module 260 (one is **green** above), which filters the frequency-shifted desired channel. Ex. 1001, 6:11-13; Ex. 1002, ¶39.

Figure 3 shows "one of the signal paths 272*a* to 272*n* of digital front end 230" and elements in one of the rows of digital front end 230 in Figure 2. Ex. 1001, 6:21-23; Ex. 1002, ¶40.

[2] Complex mixers multiply signals already separated into complex I and Q components. Ex. 1002, ¶67.

[3] Signals have a center frequency f that is modulated with data. Shifting the signal to baseband reduces f to zero, enabling filters to easily pass only the modulated data. Ex. 1002, ¶¶61-71.

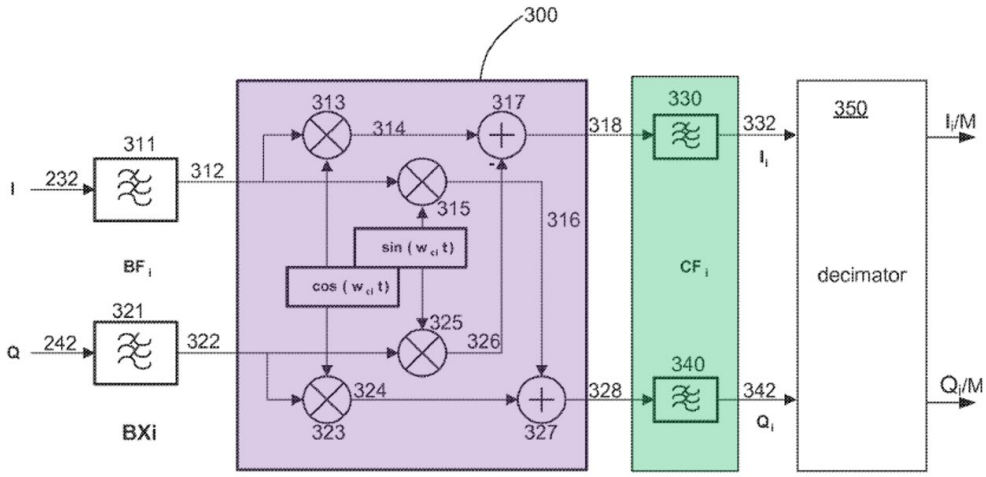

FIG. 3

Ex. 1001, Fig. 3 (annotated)

Mixer 300 represents one of the complex mixers 250 and has multipliers 313, 315, 323, and 325 and adders 317 and 327. Ex. 1001, 6:33-43. "[C]omplex mixer 300 causes a frequency shift of the filtered components 312 and 322 to respective baseband signals 318 and 328 in the digital domain" by multiplying the I and Q signals by a frequency ω_{ci} "chosen [so] that each one of the desired channels embedded in the digital signals I 232 and Q 242 will be downshifted to the baseband." Ex. 1001, 6:43-62. **Filters 330/340** (a filter module 260a-n in Figure 2) filter baseband signals 318/328. Ex. 1001, 7:3-5; Ex. 1002, ¶41. This exact structure was a conventional design, simply copied multiple times to downconvert multiple channels, respectively. *See* Ex. 1002, ¶¶65-70.

Finally, the '275 patent describes that the "N desired baseband channels" may be decimated before being sent to an associated demodulator "using a serial or

parallel data interface according to commonly known methods." Ex. 1001, 6:13-19, 7:16-20, Figs. 2-3; Ex. 1002, ¶42.

B. Prosecution History

The application which became the '275 patent was rejected only for nonstatutory double patenting based on its parent, which had similar claims but did not include the "non-contiguous" limitation. Ex. 1004, 3352-3357; Ex. 1002, ¶¶43-47. The examiner stated (correctly) that such limitation was "an obvious condition." Ex. 1004, 3356. After a terminal disclaimer was filed, the application was allowed. Ex. 1004, 3384-3406.

The reasons for allowance stated that "[t]he prior art made of record do not teach selecting, by a digital frontend (DFE) coupled to the ADC, a plurality of desired channels from the digitized signal and outputting by the DFE, the selected plurality of desired channels to at least one demodulator as a digital datastream." Ex. 1004, 3405. This was the same reason for allowance given in the parent, which was also allowed with no substantive prosecution and without consideration of any reference relied on herein. *Compare* Ex. 1004, 3405 *with* Ex. 1005, 158; Ex. 1002, ¶¶44-45. After an RCE and two IDSs to cite litigation documents and references (including the patent of the Zhang reference relied on herein), another notice of allowance was sent and the '275 patent was issued. Ex. 1004, 3415-4831, 4857. There was no discussion of Zhang (in the notice of allowance or elsewhere), and

none of Pandey, Zhang '933, Mirabbasi, and Dong were even considered during prosecution. Ex. 1004, 4824-4831; Ex. 1001, 1-3; Ex. 1002, ¶47.

C. Earliest Priority Date for the Claims

The earliest possible effective filing date for the claims of the '275 patent is April 17, 2009. Ex. 1002, ¶48. For purposes of this proceeding only, this date is used as the time of the alleged invention because each reference relied on herein is prior art to that date.

V. OVERVIEW OF PRIOR ART

A. Zhang

Zhang published on March 20, 2003, and is prior art under pre-AIA 35 U.S.C. §102(b). Zhang, which is analogous art, describes a multi-channel demodulator circuit 200 (*see* Figure 2 below) for use as "advanced wide-band front-ends for digital set-top boxes, PVRs, home gateways and home media centers." Ex. 1013, [0044]-[0045], Fig. 8; Ex. 1002, ¶¶79-82.

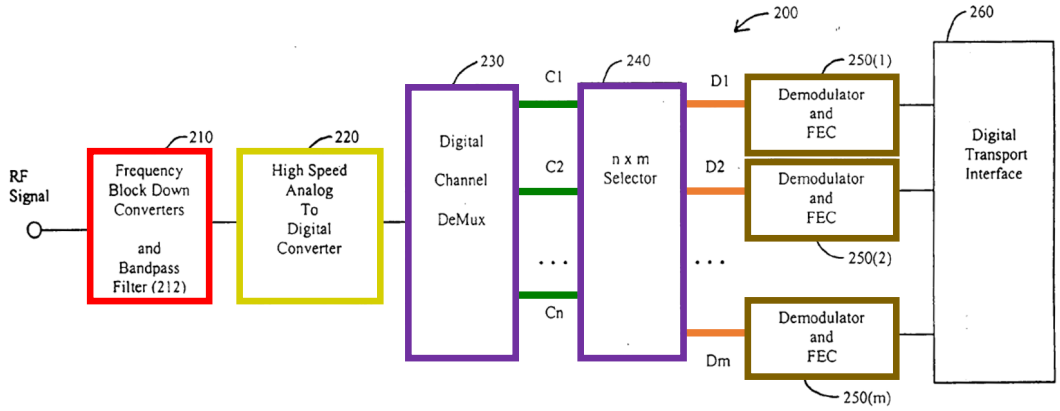

Fig. 2

Ex. 1013, Fig. 2 (annotated)

Circuit 200 receives a band of analog RF signals comprising multiple content channels and demodulates signals only for those channels that a subscriber has selected. Ex. 1013, [0011], [0024], [0028]-[0029], [0038]-[0040], [0042]. Circuit 200 comprises a **down-converter 210** that receives the band of analog RF signals and shifts the band to a lower frequency (like the '275 patent's intermediate frequency band) so an **ADC 220** can better convert the analog RF signals to digital RF signals. Ex. 1013, [0010], [0023], [0025], [0027], [0030]-[0037], [0041]-[0042]; Ex. 1002, ¶80.

Much like the '275 patent's complex mixers and filters that extract various selected channels in parallel, Zhang's **demultiplexer 230** separates channels selected by a subscriber in the incoming digital RF signals (e.g., **channels C_1 to C_n**), while **selector 240** forwards any or all of the selected channels (e.g., **channels D_1 to D_m**) to one or more of **demodulators 250(1)-250(m)**. Ex. 1013, [0010]-[0011], [0028]-[0029], [0042], [0047], claims 1, 4, 9, 31-32; Ex. 1002, ¶80. Demodulators 250(1)-250(m) demodulate the signals of the selected content channels to recover the audio and video data therein. Ex. 1013, [0007]; Ex. 1002, ¶80.

Further, as shown in Zhang's Figure 3 (below), demultiplexer 230 includes a bank of numeric control oscillators (NCOs) 310(1)-310(n), **complex multipliers 320(1)-320(n)**, and **low-pass filters (LPFs) 330(1)-330(n)**. Ex. 1013, [0030].

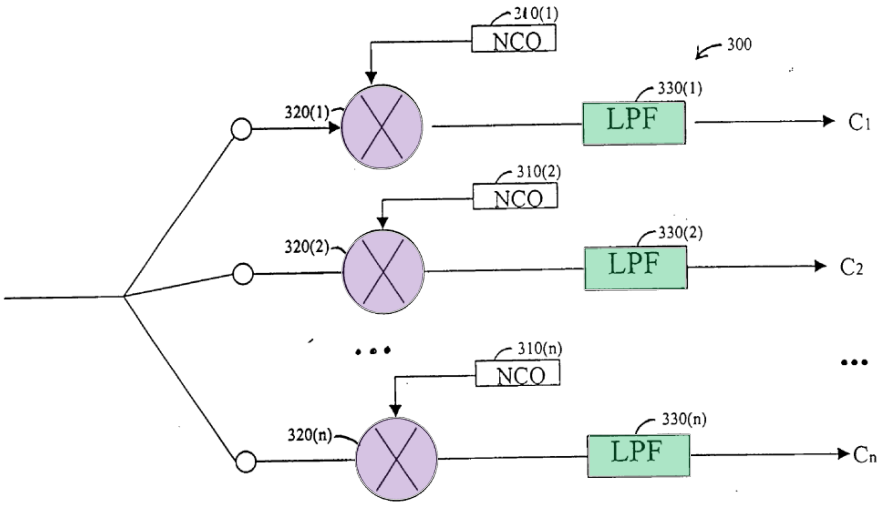

Ex. 1013, Fig. 3 (annotated)

The complex multipliers 320(1)-320(n), like the complex mixer in the '275 patent, multiply the digital RF signals with select frequencies provided by the NCOs 310(1)-310(n), thereby shifting the frequencies of the digital RF signals to baseband. Ex. 1013, [0032]; Ex. 1002, ¶81. The LPFs 330(1)-330(n) "filter[] undesired RF channels and pass[] only the target RF channel." Ex. 1013, [0033], claim 37.

As discussed below, Zhang discloses or teaches the features of all challenged claims, except the two ADCs (claims 4/14) and picture-in-picture (claims 6/16).

B. Pandey

Pandey issued on June 26, 2007, and is prior art under pre-AIA 35 U.S.C. §102(b). Ex. 1002, ¶83.

Pandey is cited for the common process of implementing serial and parallel interfaces (recited in challenged claims 2 and 3) in an integrated circuit, and is analogous art. *Id.*, ¶86; Ex. 1014, Abstract, 1:15-55, 2:4-12. Pandey teaches

partitioning functional blocks of an integrated circuit chip and assigning wire traces (e.g., 351) to interconnect them. Ex. 1014, 1:56-60, 2:6-12, 2:64-3:3, 6:10-15, 11:6-19, 13:33-14:7, Fig. 3 (below); Ex. 1002, ¶84.

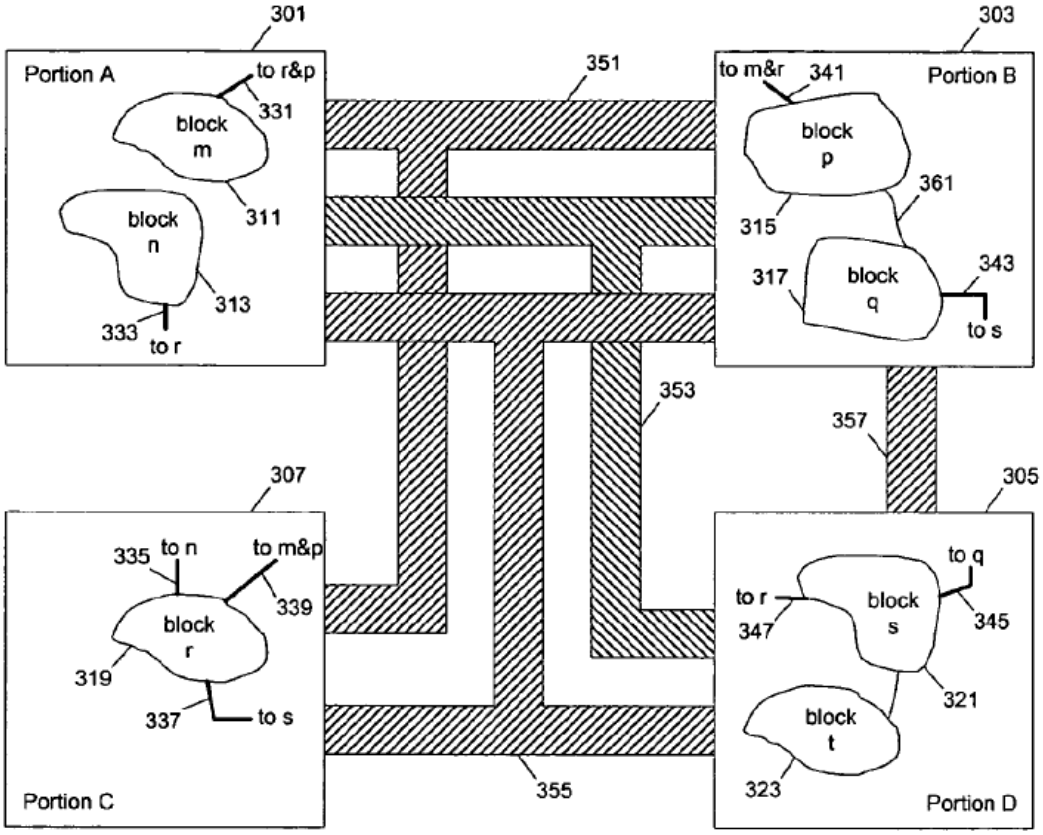

Ex. 1014, Fig. 3

The number of signals between blocks in different partitions may exceed the number of traces available, in which case multiple signals must be time-multiplexed (i.e., transmitted serially) over a single trace. Ex. 1014, 10:24-53, 10:58-11:5, 29:44-58, 30:31-42; Ex. 1002, ¶85. Pandey's process seeks to optimize chip design (e.g., assignment of signals to wires). Ex. 1014, 5:50-53, 6:11-15, 6:44-53, 7:13-19, 29:44-30:9, 30:53-31:12, 31:56-63, Figs. 38-39; Ex. 1002, ¶85. Pandey's

optimization results in signals being grouped and time multiplexed through a serial interface in some layouts, and in signals having individual dedicated traces (i.e., a parallel interface) in other layouts. Ex. 1014, 31:20-22, 32:12-15; Ex. 1002, ¶85.

C. Zhang '933

Zhang '933 published on July 15, 2004, and is prior art under pre-AIA 35 U.S.C. §102(b). Ex. 1002, ¶87.

Zhang '933 relates to a multi-channel demodulator for cable, satellite, and terrestrial broadcast systems, and therefore is analogous art to the '275 patent (and Zhang). Ex. 1077, Abstract, [0001]-[0002], [0009]; Ex. 1002, ¶¶88-90. Zhang '933 describes a multi-channel demodulator with a single **demodulation engine 44** for demodulating multiple RF channels. Ex. 1077, Abstract, [0022]-[0026], [0028], Fig. 3 (below); Ex. 1002, ¶¶88-89.

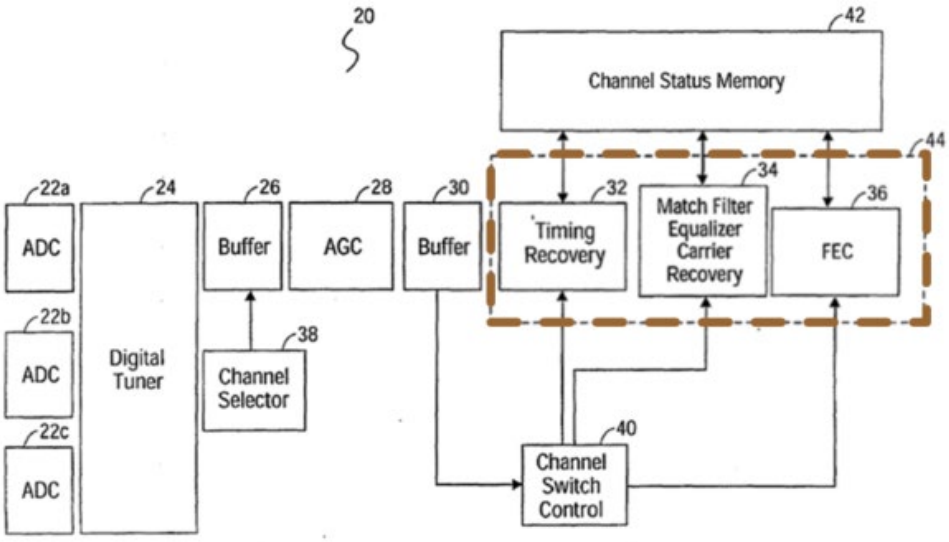

FIG. 3

Ex. 1077, Fig. 3 (annotated)

Zhang ’933 is relied on for showing that it would have been obvious to use a single demodulator instead of Zhang’s multiple demodulators 250(1)-250(m), and therefore obvious to output Zhang’s desired channels to a single demodulator via a serial interface (recited in challenged claim 2).

D. Mirabbasi

Mirabbasi is a journal article published on November 30, 2000 (Ex. 1073, ¶¶78-85), and prior art under pre-AIA 35 U.S.C. §102(b). Ex. 1002, ¶91. Mirabbasi discloses RF receiver systems, and therefore is analogous art to the ’275 patent (and Zhang). Ex. 1002, ¶¶92-94.

Mirabbasi discusses the advantages of using complex mixing when frequency shifting RF signals to a lower frequency to avoid image band problems of real mixing. Ex. 1018, 5; Ex. 1002, ¶92.

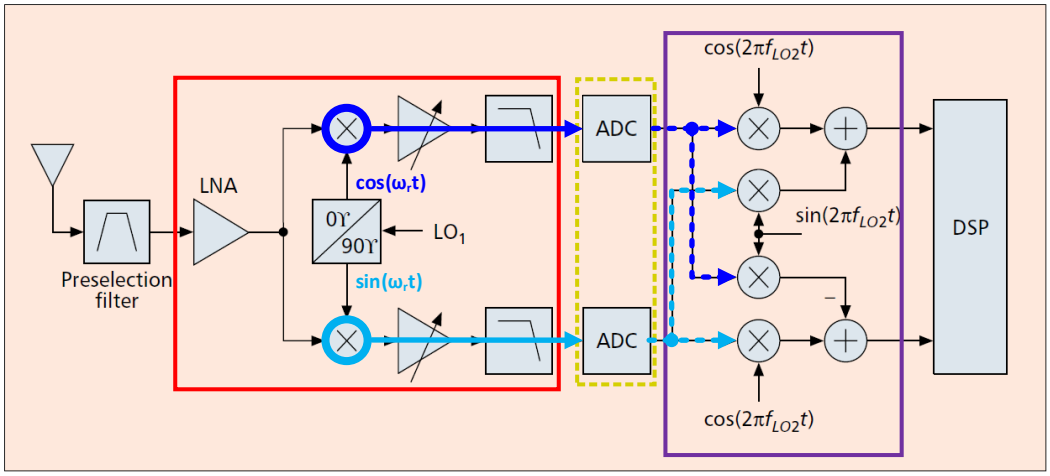

Ex. 1018, Fig. 10 (annotated)

Figure 10 shows an example of a well-known RF receiver architecture, like that in the '275 patent and Zhang, where signals are down-converted (i.e., frequency shifted to a lower frequency) through two mixing stages. Ex. 1018, 10; Ex. 1002, ¶93. The **first mixing stage** mixes an analog signal with a complex exponential via a complex mixing circuit of two mixers (**dark blue circle** and **light blue circle**). Ex. 1018, 6, 10; Ex. 1002, ¶93. The real and imaginary outputs of the first mixing stage are called the in-phase (I) and quadrature (Q) components of the frequency-shifted signal (since cosine and sine are in quadrature). Ex. 1018, 6; Ex. 1002, ¶93. The I and Q components of the frequency-shifted signal are digitized individually by two **ADCs**. Ex. 1018, 10; Ex. 1002, ¶93. The **second mixing stage** involves a complex mixing circuit with four mixers and two adders and further down-converts the digital I and Q components before forwarding them to the digital signal processor (DSP). Ex. 1018, 6, 10; Ex. 1002, ¶93.

E. Dong

Dong published on December 9, 2004, and is prior art under pre-AIA 35 U.S.C. §102(b). Ex. 1002, ¶95.

Dong relates to receiver architectures including set-top box receiver architectures, and therefore is analogous art to the '275 patent (and Zhang). Ex. 1078, [0002]; Ex. 1002, ¶¶96-98. Dong discloses an example architecture (see Figure 1B below) in which demodulated digital data is output as a **PVR output**

stream for storage in a personal video recorder (PVR) and output as a PNP output stream for picture-in-picture (PnP) operations. Ex. 1078, [0027]; Ex. 1002, ¶¶96-97.

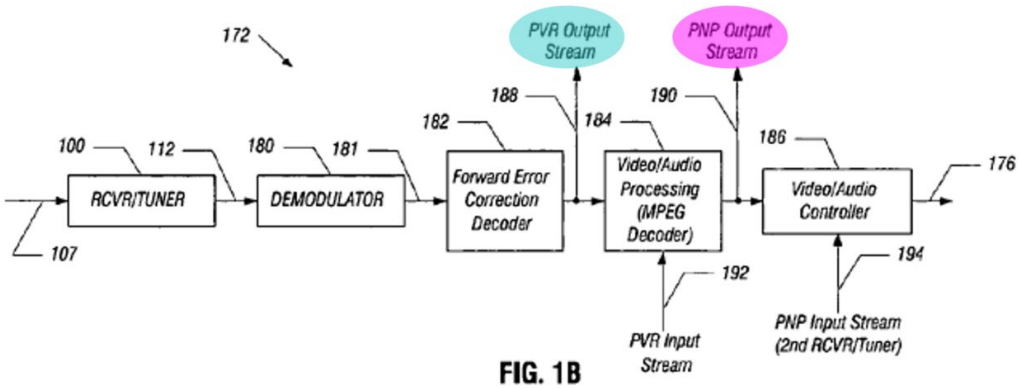

Ex. 1078, Fig. 1B (annotated)

Dong is relied on for showing that it would have been obvious to store the output(s) of Zhang's demodulator(s) for use in a digital video recorder (DVR) (challenged claim 5) and to use the output(s) for a picture-in-picture display (challenged claim 6).

VI. IDENTIFICATION OF CHALLENGE PURSUANT TO 37 C.F.R. § 42.104(B)

A. Claims for Which Review is Requested and Grounds on Which Challenge Is Based

Petitioner requests review of claims 1–20 on the following grounds.

Ground	References	Basis	Claims Challenged
A	Zhang	§102	1-3, 5, 7-13, 15, 17-20

B	Zhang	§103	1-3, 5, 7-13, 15, 17-20
C	Zhang-Pandey	§103	2-3, 12-13
D	Zhang-Zhang ’933	§103	2, 12
E	Zhang-Mirabbasi	§103	4, 11-15, 17-20
F	Zhang-Dong	§103	5-6, 15-16
G	Zhang-Mirabbasi-Pandey	§103	12-13
H	Zhang-Mirabbasi-Zhang ’933	§103	12
I	Zhang-Mirabbasi-Dong	§103	15-16

A supporting declaration of David B. Lett includes a discussion of Mr. Lett’s background (Ex. 1002, ¶¶1-16), materials he considered and his understanding of legal standards (*id.*, ¶¶17-29), the ’275 patent (*id.*, ¶¶36-48), the prior art (*id.*, ¶¶49-98), and his opinions and bases therefor (*id.*, ¶¶1-272). Mr. Lett at least meets the level of skill of a POSITA. *Id.*, ¶¶2-16, 30-32; Ex. 1003.

B. 314(a) Discretion Does Not Apply

The Fintiv factors as set forth in the Director’s June 21, 2022 Guidance Memorandum do not warrant discretionary denial.

Factor one appears neutral. The PTAB has instituted IPR on seven of the eight patents originally asserted in the District Court in case no. 2:23-cv-01050, and Petitioner is now filing IPR petitions challenging a patent that Patent Owner seeks

to add to the case. Petitioner has also requested a stay, as final written decisions on the instituted IPRs in Petitioner's favor would resolve the majority of the litigation.

Factor two favors institution. Petitioner has filed a motion to dismiss the District Court case, Patent Owner has filed motions for leave to file amended complaints, and Petitioner will renew its Motion to Dismiss in order to seek dismissal of the operative complaint. In addition, no schedule beyond claim construction has been entered, and the Court has not set a trial date.

Factor three favors institution. To date, the investment by the District Court has been limited to considering motions to dismiss on the pleadings and hearing arguments on claim construction. The Court has not yet heard claim construction arguments on the '275 patent, and there is presently no schedule in place for claim construction proceedings on the '275 patent.

Factor four strongly favors institution. The petition challenges all claims in the '275 patent while Patent Owner seeks to assert only claims 1, 2, 5, 7, 8, 10-12, 15, 17, 18, and 20 in the District Court.

Factor five does not warrant denial as Petitioner is a defendant in the District Court case.

Factor six favors institution. Petitioner presents compelling unpatentability challenges that merit institution, relying on prior art that was never discussed and arguments that were never presented or were overlooked during prosecution.

C. 325(d) Discretion Does Not Apply

Considering the two-part framework discussed in *Advanced Bionics, LLC v. Med-El Elektromedizinische Geräte GMBH*, IPR2019-01469, Paper 6, *8-9 (PTAB Feb. 13, 2020), the Board should not exercise its §325(d) discretion to deny institution. The '275 patent issued with no substantive prosecution history. *See* §IV.B, *supra*. It issued following a terminal disclaimer to overcome a double patenting rejection based on its parent. The parent (which has similar claims) issued after a first action allowance. None of the references relied upon herein were considered during prosecution of the parent.

During the '275 prosecution, Applicant submitted an IDS including an invalidity chart mapping a patent that issued from Zhang (the patent publication that is primarily relied on herein) against claims 11 and 12 of U.S. Patent No. 9,210,362. Ex. 1004, 125-130, 561-575. This claim chart was included among over 2,000 pages of non-patent literature submitted with the IDS, without any additional context from the Applicant to indicate its relevance. *See* Ex. 1004, 125-2282. An initialed IDS alone is insufficient to show that its material was meaningfully addressed. [Proposed] Patent Trial and Appeal Board Rules of Practice for Briefing Discretionary Denial Issues, and Rules for 325(d) Considerations, Instituting Parallel and Serial Petitions, and Termination Due to Settlement Agreement, 89 Fed. Reg. 28693, 28705 (proposed Apr. 19, 2024) ("2024 Proposed PTAB Rules");

Dropbox, Inc. v. Motion Offense, LLC, IPR2024-00286, Paper 12 *13, 15-16 (PTAB Jul, 25, 2024); *Hanshow America, Inc. et al. v. SES-ImagotagInc.*, IPR2024-00208, Paper 14 *11-12 (PTAB May 20, 2024).

Although the Examiner allegedly considered the Zhang patent during the '275 prosecution, the Examiner never discussed Zhang or that Zhang patent. Rather, in addressing the IDS that disclosed the Zhang patent after the Examiner issued a first notice of allowance, the Examiner apparently dismissed all the disclosed materials (including the Zhang patent) as being cited for "other patents, i.e. US 8223,775" involved in Entropic's litigations. Ex. 1004, 4829. The Examiner did not specifically refer to Zhang or the Zhang patent, much less meaningfully address either by evaluating and articulating a meaningful consideration. *See* 2024 Proposed PTAB Rules, 89 Fed. Reg. 28693, 28705.

Dismissing Zhang was a significant error. Ex. 1002, ¶47. As Zhang alone anticipates and renders obvious most claims (*see* §VII.A, *infra*), the Examiner erred in a manner material to the patentability of the challenged claims by failing to apply Zhang. In particular, the Examiner erred by overlooking that Zhang discloses or teaches (*see* §§VII.A.1.e-f, *infra*) the "selecting" and "outputting" steps (element [1E] and part of element [1F]) that the Examiner recited in the reasons for allowance (Ex. 1004, 4830). *Advanced Bionics*, at 8-10 & n.9. The Board's institution decision

in IPR2024-00432 (challenging the ’362 patent based on Zhang) demonstrates that the Examiner erred and weighs against denial under §325(d) here. *Dropbox*, at 16.

Finally, there is no evidence that the Examiner ever considered Zhang in combination with any of the secondary references relied on herein (e.g., the claim chart against the ’362 patent used only the Zhang patent). To the contrary, the Examiner apparently (and incorrectly) allowed the ’275 patent on the basis of its parent, which the Examiner allowed without consideration of the art or arguments presented herein.

D. Level of Ordinary Skill

A person of ordinary skill in the art (“POSITA”) at the time of the alleged invention would have had a degree in electrical engineering, or a similar discipline, along with three-to-four years of experience with digital signal processing and RF tuning systems for satellite and/or cable digital communications. Additional education may substitute for professional experience, and significant work experience may substitute for formal education. Ex. 1002, ¶¶30-32.

E. Claim Construction

All claim terms herein should be given their ordinary and customary meaning to a POSITA as they would be given in a civil action under 35 U.S.C. §282(b). 37 C.F.R. §42.100(b). No claim constructions should be necessary and there are no means-plus-function terms. The following constructions are only provided in case

some terms are considered means-plus-function terms under pre-AIA 35 U.S.C. §112, paragraph 6.

1. "radio front end"

To the extent "radio front end" of claim 11 is construed to be a means-plus-function term with the function of "process[ing] the input signal" and to the extent the '275 patent discloses corresponding structure for this limitation, that structure is the radio front end 210 or radio front end 410 illustrated in Figures 2 and 4, respectively. Ex. 1001, Figs. 2, 4, 4:43-5:47, 7:31-46; Ex. 1002, ¶¶33-34.

2. "digital frontend (DFE)"

To the extent "digital frontend (DFE)" of claims 11-13 is construed to be a means-plus-function term with the functions of "select[ing] the plurality of desired channels from the digitized signal and output[ting] the selected plurality of desired channels to at least one demodulator as a digital datastream," ([11E]-[11F]), "output[ting] the digital datastream via a serial interface" (claim 12), and "output[ting] the digital datastream via a parallel interface" (claim 13) and to the extent the '275 patent discloses corresponding structure for this limitation, that structure is the digital front end 230 of Figure 2 (including mixers 250 and filters 260 but not requiring decimators 270). Ex. 1001, Figs. 2-3, 5:56-7:20; Ex. 1002, ¶35.

VII. SPECIFIC GROUNDS FOR UNPATENTABILITY

A. Grounds A and B: Claims 1-3, 5, 7-13, 15, and 17-20 are Anticipated and Rendered Obvious by Zhang

As set forth below, Zhang anticipates and renders obvious claims 1-3, 5, 7-13, 15, and 17-20. Ex. 1002, ¶¶99-202.

1. Independent Claim 1

Elements [1A]-[1F] are disclosed or taught by Zhang.[4]

a. [1A] "A method for operating a television receiver, comprising:"

While the preamble [1A] is not limiting, Zhang discloses it. Zhang discloses a method for implementing and operating "digital multi-channel demodulation circuits" (e.g., multi-channel demodulators 200, 600, 710, 810). Ex. 1013, Abstract, [0004], [0009], claim 28; Ex. 1002 ¶¶102-103. The demodulation circuits are for a "wide-band receiver" and receive signals for television systems. Ex. 1013, [0023], [0025], [0047]. Thus, Zhang discloses the claimed "method for operating a television receiver." Ex. 1002, ¶103. Zhang's method also comprises [1B]-[1F]. *See* §§VII.A.1.b-f, *infra*.

[4] The claim limitations are labelled in the Claim Listing Appendix.

b. [1B] "receiving, by an input terminal, an input signal comprising broadcast channels, the broadcast channels comprising a plurality of desired channels and a plurality of undesired channels, wherein the plurality of desired channels are non-contiguous;"

Zhang's Figure 2 shows an **input terminal** (claimed "input terminal") that receives an RF signal (claimed "input signal"):

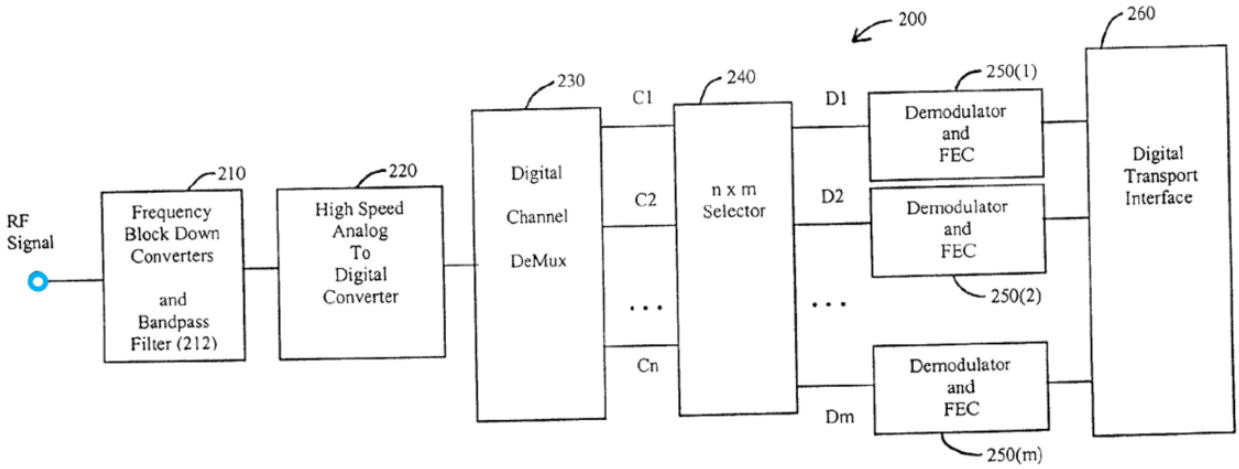

Ex. 1013, Fig. 2 (annotated)

Ex. 1002, ¶105.

Zhang's RF signal is an analog signal comprising multiple RF channels (claimed "broadcast channels") that each include one or more TV content channels for access by multiple subscribers. Ex. 1013, [0005], [0023]-[0025], [0029], [0040]-[0042], claims 1, 3, 13, 27-30, 33; Ex. 1002, ¶106. Just as in the '275 patent, some of Zhang's RF channels are "target" RF channels (claimed "desired channels") that are selected by a subscriber for demodulation, and some are "unwanted" RF channels (claimed "undesired channels") which are later filtered out. *Compare* Ex. 1013, [0032], [0025]-[0026], [0028], claims 2, 4, 34, 36, 37 *with* Ex. 1001, Abstract,

6:8-13, 6:59-7:25; Ex. 1002, ¶¶107-109. As discussed further below (*see* §VII.A.1.e, *infra*), from among the RF channels of the RF signal, Zhang's demultiplexer 230 selects target RF channels C_1-C_n and filters out unwanted RF channels. Ex. 1013, [0028]-[0032].

Claim 1 also requires that "the plurality of desired channels are non-contiguous," and Zhang explicitly discloses that "the RF channels need not be contiguous." Ex. 1013, [0048]. This disclosure in Zhang includes that the target RF channels C_1-C_n are non-contiguous. *See id.*, [0028]-[0032] (disclosing selection of an 'n' number of channels C_1-C_n without limiting them to consecutive RF channels), [0042] (same); Ex. 1002, ¶110. Moreover, Zhang discloses selecting at least three target RF channels C_1-C_n. Ex. 1002, ¶110; Ex. 1013, [0028]-[0032], [0042] (disclosing 35 target RF channels C_1-C_{35}), Figs. 2-3 (showing at least 3 target RF channels C_1-C_n). In cases where Zhang discloses at least three target RF channels C_1-C_n, at least two of them are necessarily non-contiguous (e.g., C_1 and C_3 are non-contiguous). Ex. 1002, ¶110. In such cases, at least the two non-contiguous target RF Channels meet the claimed "plurality of desired channels" that are "non-contiguous" in [1B]. *Id.*

To the extent Zhang does not expressly disclose the target RF channels C_1-C_n being non-contiguous, a POSITA would have found this condition obvious. *Id.*, ¶111. Zhang discloses the RF signal being "sourced by a variety of systems such as

satellite systems, terrestrial TV systems, cable systems, etc." Ex. 1013, [0023], [0029] (specifically naming "NTSC, ATSC, DVB-T, etc" as systems). A POSITA would have understood that the RF signal used in these systems would, in at least some implementations, include RF channels in "different frequency bands" that are spaced apart. Ex. 1013, [0048], [0024]; Ex. 1002, ¶111. As noted above, Zhang teaches that the RF channels "need not" be contiguous. Ex. 1013, [0048]. Moreover, a POSITA would have understood that subscribers select content channels according to their individual desires and regardless of the underlying frequencies used to carry the content channels. Ex. 1013, [0024], [0028], claims 3, 30; Ex. 1002, ¶111. Thus, a POSITA would have expected a subscriber to select content channels within non-contiguous RF channels. Ex. 1002, ¶111. Indeed, it would be mere happenstance (and statistically unlikely, given the volume of available channels) if *all* of the channels the user selected were contiguous. *Id.* To the contrary, the expectation of a POSITA would be that the channels would not be contiguous. *Id.* At a minimum, a POSITA would have immediately recognized that, in at least some instances of operating Zhang's system, the target RF channels C_1-C_n—targeted to capture the subscriber's desired content channels—would obviously have been non-contiguous. *Id.*; Ex. 1013, [0028], [0032]. Even the '275 patent recognizes that it was known that, inevitably, users would select (i.e., "desire") channels that are non-contiguous in a received RF bandwidth. Ex. 1001, 1:44-48, 1:55-58, 2:16-18.

Further, a POSITA would have been motivated to implement Zhang's system so that the target RF channels C_1-C_n are non-contiguous because it improves the system's flexibility to access content. Ex. 1002, ¶112. A POSITA would not have wanted to be limited to targeting RF channels C_1-C_n within a single frequency band because content would have been (in at least some instances) broadcast in separate frequency bands on non-contiguous RF channels. *Id.* A POSITA would have sought to improve the system's flexibility to increase the number of content channels that are accessible to subscribers. *Id.* For example, if 180 content channels (18 content channels per 10 RF channels) are in a first frequency band and 90 content channels (18 content channels per 5 RF channels) are in a second frequency band, a POSITA would have been motivated to implement Zhang such that the target RF channels C_1-C_n are selected from both bands to increase the total number of accessible content channels. *Id.* A POSITA would have wanted to increase the number of accessible content channels to attract subscribers and increase revenue. *Id.*

A POSITA would have had a reasonable expectation of success in implementing Zhang such that the target RF channels C_1-C_n are non-contiguous because doing so does not involve any structural change to Zhang's system or any additional steps. *Id.*, ¶113. Zhang's system already receives an RF signal that, according to Zhang (Ex. 1013, [0048]), covers different frequency bands and comprises target RF channels C_1-C_n and unwanted channels that need not be

contiguous. Ex. 1002, ¶113. Each of the target RF channels C_1-C_n is selected by setting a target frequency of one of Zhang's NCOs 310(1…n). Ex. 1013, [0032]. Each target frequency is set to a characteristic frequency of a desired RF channel in the RF signal. *Id.* Whether an RF channel is desired is the result of a subscriber's choice. *Id.*, [0028]. Zhang's system does not influence the subscriber's choice, and is indifferent as to whether the desired RF channels are contiguous or not. Ex. 1002, ¶113. Zhang's system can select non-contiguous RF channels just as easily as it can select contiguous channels. *Id.*

For the reasons above, Zhang discloses and renders obvious [1B].

In this section above, Zhang's target RF channels C_1-C_n were mapped to the claimed "desired channels." Alternatively, Zhang's selected RF channels D_1-D_m are the claimed "desired channels." Ex. 1002, ¶114. Zhang discloses that selector 240 "selects one or more of the RF channels D_1 to D_m from one or more of the digital RF channels C_1 to C_n." Ex. 1013, [0028]. This includes instances where the number of selected RF channels D_1-D_m is less than the number of target RF channels C_1-C_n and there are multiple unselected RF channels. Ex. 1002, ¶114. In such instances, the multiple unselected RF channels are the claimed "undesired channels." *Id.*

Further, when disclosing that selector 240 "selects one or more of the RF channels D_1 to D_m from one or more of the digital RF channels C_1 to C_n," Zhang discloses numerous embodiments. Ex. 1013, [0028]; Ex. 1002, ¶115. The

embodiments include any set of the RF channels C_1-C_n being selected for the RF channels D_1-D_m, including embodiments in which selected RF channels D_1-D_m are non-contiguous. Ex. 1013, [0028], [0048] (explaining that a POSITA recognizes many variations and "RF channels need not be contiguous"); Ex. 1002, ¶115. For example, a POSITA would have understood that Zhang's disclosure covers selected RF channels D_1 and D_2 being RF channels C_1 and C_4. Ex. 1002, ¶115. In this case, selected RF channels D_1 and D_2 (an example of the claimed "desired channels") are non-contiguous because they do not include the intermediate channels C_2 and C_3 (an example of the claimed "undesired channels"). *Id.*

To the extent it is argued that Zhang does not expressly disclose the selected RF channels D_1-D_m being non-contiguous, a POSITA would have also found this condition obvious for the same reasons discussed above for why the target RF channels C_1-C_n obviously would have been non-contiguous. *Id.*, ¶116. Additionally, a POSITA would have been motivated to cause D_1-D_m to be selected such that they are non-contiguous because a POSITA would have wanted to avoid demodulating RF channels among C_1-C_n that a subscriber is not interested in or not subscribed to receive. *Id.* The subscriber is apathetic regarding the continuity of RF channels carrying content channels and would have been interested in or subscribed to content channels carried on non-contiguous RF channels. *Id.* Further, a POSITA would have been motivated to configure Zhang to demodulate only selected channels D_1-

D_m (not all C_1-C_m) because it conserves resources (e.g., power), reduces costs, and speeds up delivery of content channels to subscribers. *Id.*; Ex. 1013, [0009], [0026], [0028]-[0029]; Ex. 1079, Abstract, 1:5-8, 2:13-22.

Moreover, a POSITA would have understood that Zhang does not limit the channels D_1-D_m to be in a particular order corresponding to the channels C_1-C_n. Ex. 1002, ¶117. For example, channels D_1 and D_2 do not have to be channels C_1 and C_2, respectively. *Id.* Zhang's disclosure includes channel D_2 being channel C_4 or any other channel among C_1 to C_n. *Id.* Also, because "the RF channels need not be contiguous" (Ex. 1013, [0048]), a POSITA would have found it obvious to operate Zhang's system to select channels D_1-D_m from those non-contiguous RF channels such that selected RF channels D_1-D_m were non-contiguous too. Ex. 1002, ¶117. A POSITA would have understood that the scenario in which the selected RF channels D_1-D_m are non-contiguous is one obvious result of selecting channels from among non-contiguous channels. *Id.*

With respect to this alternative mapping, a POSITA would have had a reasonable expectation of success in implementing Zhang such that the selected RF channels D_1-D_m are non-contiguous because doing so does not involve any structural change to Zhang's system or any additional steps, as described above. *Id.*, ¶118. Zhang's selector 240 is already configured to select any subset of the RF channels C_1-C_n in the RF input signal. *Id.* The condition that the selected RF channels D_1-

D_m are non-contiguous is merely the result of not selecting some of the RF channels C_1-C_n. *Id.*

In sum, Zhang discloses and teaches receiving, by the input terminal, the RF signal comprising broadcast RF channels, the broadcast RF channels comprising target RF channels C_1-C_n (or alternatively selected RF channels D_1-D_m) and unwanted channels (or alternatively channels from C_1-C_n not selected for D_1-D_m), wherein the target RF channels C_1-C_n (or alternatively selected RF channels D_1-D_m) are non-contiguous, thereby disclosing and teaching [1B] in multiple ways. *Id.*, ¶¶119-120.

c. [1C] "processing, by a radio front end coupled to the input terminal, the input signal to generate a processed input signal;"

Zhang discloses **down-converter 210** (claimed "radio front end") coupled to the **input terminal** (claimed "input terminal"):

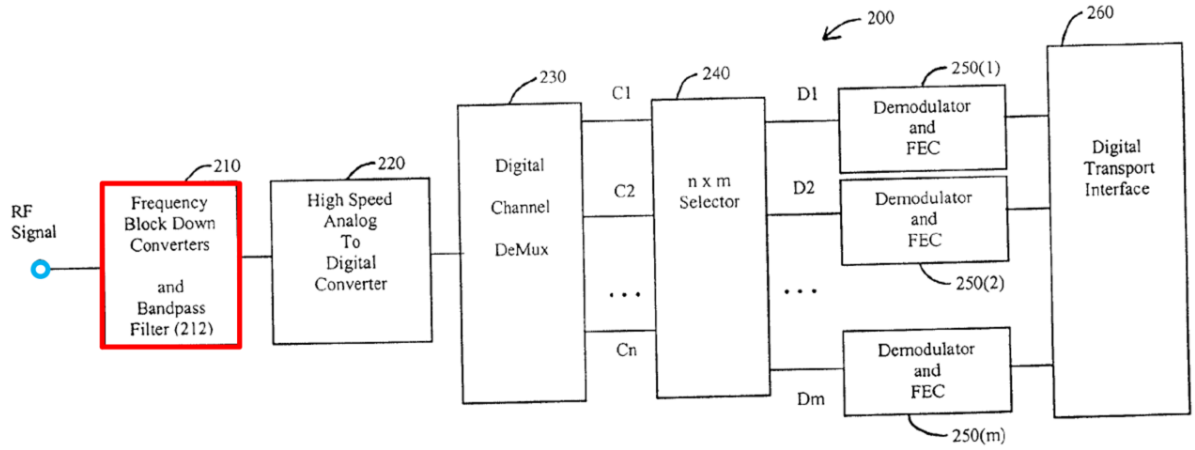

Ex. 1013, Fig. 2 (annotated)

Ex. 1013, [0023]-[0024]; Ex. 1002, ¶121. Zhang's **down-converter 210** is a radio front end because it first receives and processes the RF (*radio* frequency) signal before the RF signal is demodulated, just as the '275 patent's radio front end 210 receives and processes the RF input signal 102 before demodulation. *Compare* Ex. 1013, [0023]-[0026], [0045], Fig. 2 *with* Ex. 1001, 4:42-6:19, Fig. 2; Ex. 1002, ¶¶122-123.

The down-converter 210 "shifts the multi-channel analog RF signal to a lower frequency band." Ex. 1013, [0025]. This down-shifting of the RF signal (claimed "processing…the input signal") generates a down-converted signal (claimed "processed input signal"). Ex. 1013, [0025]-[0027]; Ex. 1002, ¶¶122, 125. This down-shifting by Zhang's down-converter 210 is the same as the zero-IF or low-IF down-mixing performed by the '275 patent's radio front end 210. *Compare* Ex. 1013, [0025]-[0026] *with* Ex. 1001, 2:10-12, 2:64-3:1, 4:65-5:47; Ex. 1002, ¶¶123-124. Thus, Zhang discloses [1C].

d. [1D] "digitizing, by an analog-to-digital converter (ADC) coupled to the radio front end, the processed input signal to generate a digitized signal;"

Zhang discloses **ADC 220** (claimed "analog-to-digital converter") coupled to the **down-converter 210** (claimed "radio front end"):

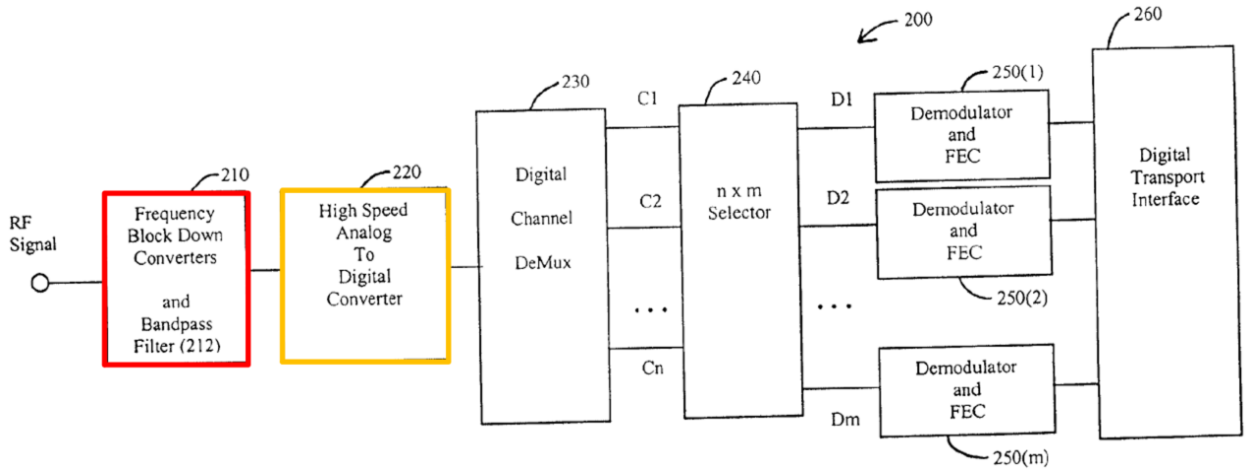

Ex. 1013, Fig. 2 (annotated)

Ex. 1013, [0027], Fig. 2; Ex. 1002, ¶126. ADC 220 digitizes the down-converted signal (claimed "processed input signal" (*see* §VII.A.1.c, *supra*)) to generate a multi-channel digital RF signal (claimed "digitized signal"). Ex. 1013, [0027], [0042], claims 8, 28; Ex. 1002, ¶¶126-127. Thus, Zhang discloses [1D].

e. [1E] "selecting, by a digital frontend (DFE) coupled to the ADC, the plurality of desired channels from the digitized signal; and"

Zhang discloses **demultiplexer 230** (claimed "digital frontend (DFE)") coupled to **ADC 220** (claimed "ADC") and selecting the **target RF channels C_1-C_n** (claimed "desired channels" (*see* §VII.A.1.b, *supra*)) from the multi-channel digital RF signal (claimed "digitized signal" (*see* §VII.A.1.d, *supra*)):

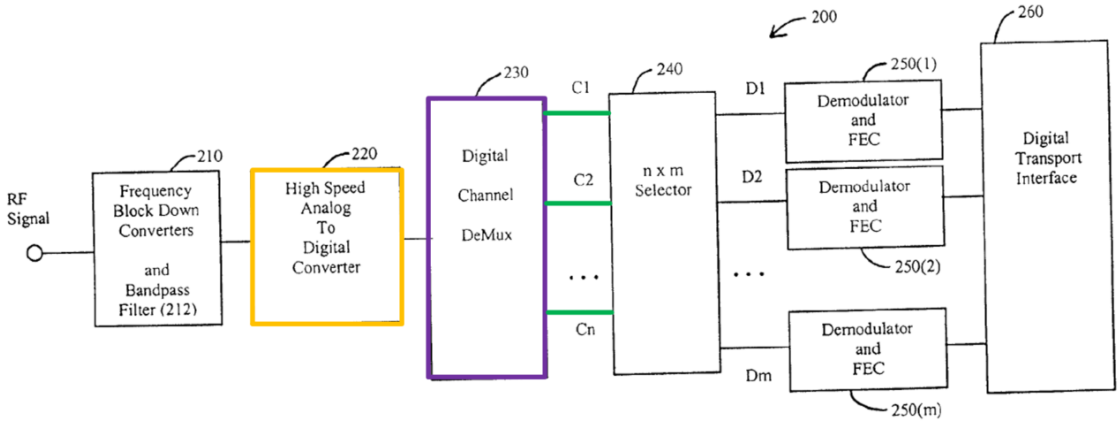

Ex. 1013, Fig. 2 (annotated)

Ex. 1013, [0028]-[0032], [0042], Fig. 2; Ex. 1002, ¶¶128-130. Zhang's ***digital* channel demultiplexer 230** is a *digital* frontend because it processes digital signals—specifically the multi-channel digital RF signal—before demodulation, just as the '275 patent's digital frontend processes digital signals before demodulation. *Compare* Ex. 1013, [0028]-[0032], [0045], Fig. 2 *with* Ex. 1001, 5:56-6:19, Fig. 2; Ex. 1002, ¶¶129-131.

Demultiplexer 230 receives the multi-channel digital RF signal from ADC 220 and selects, from this signal, a number "n" of **target RF channels C_1-C_n**, each having a unique characteristic frequency that matches a "target" frequency. Ex. 1013, [0028], [0030]-[0032], claims 1, 2, 10-11, 13, 17, 21, 23, 27-28, 30, 33-34, 36, 41, Figs. 2-3; Ex. 1002, ¶130. The target RF channels C_1-C_n selected are those that "contain content channels that are selected or used by a subscriber." Ex. 1013, [0028], [0030]-[0032], [0042], claims 34, 36-41; Ex. 1002, ¶130.

As shown below, Zhang uses the same technique for selecting target RF channels C_1-C_n that the '275 patent uses for selecting desired channels: first using a **bank of complex mixers** to frequency-shift the multi-channel digital RF signal so that each mixer shifts a different target/desired channel to baseband (0 Hz), and then using **low pass filters** to filter out the undesired channels so that only the target/desired channels remain:

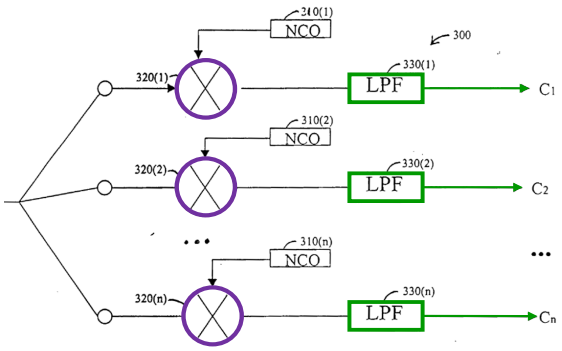

Fig. 3

Ex. 1013, Fig. 3 (annotated)

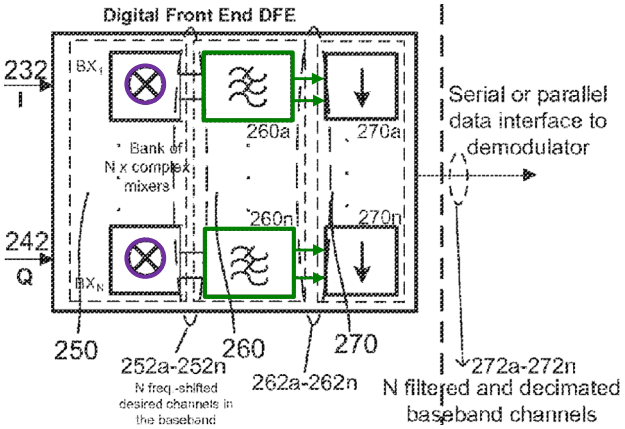

Ex. 1001, Fig. 2 (annotated)

Ex. 1002, ¶¶131-134; *Compare* Ex. 1001, 3:3-7, 6:8-7:15 *with* Ex. 1013, [0027], [0030]-[0032]. For these reasons, Zhang discloses [1E]. Ex. 1002, ¶135.

In this section above, Zhang's demultiplexer 230 alone was mapped to the claimed "digital frontend (DFE)" and Zhang's target RF channels C_1-C_n were mapped to the claimed "desired channels." Alternatively, Zhang's demultiplexer 230 in combination with all or part of digital selector 240 is the claimed "digital frontend (DFE)" and Zhang's selected RF channels D_1-D_m are the claimed "desired channels" (*see* §VII.A.1.b, *supra*). Ex. 1002, ¶136. The combination of the

demultiplexer 230 and **selector 240** is coupled to **ADC 220** and selects (after first selecting **target RF channels C_1-C_n**) the **RF channels D_1-D_m** from the multi-channel digital RF signal output by **ADC 220**:

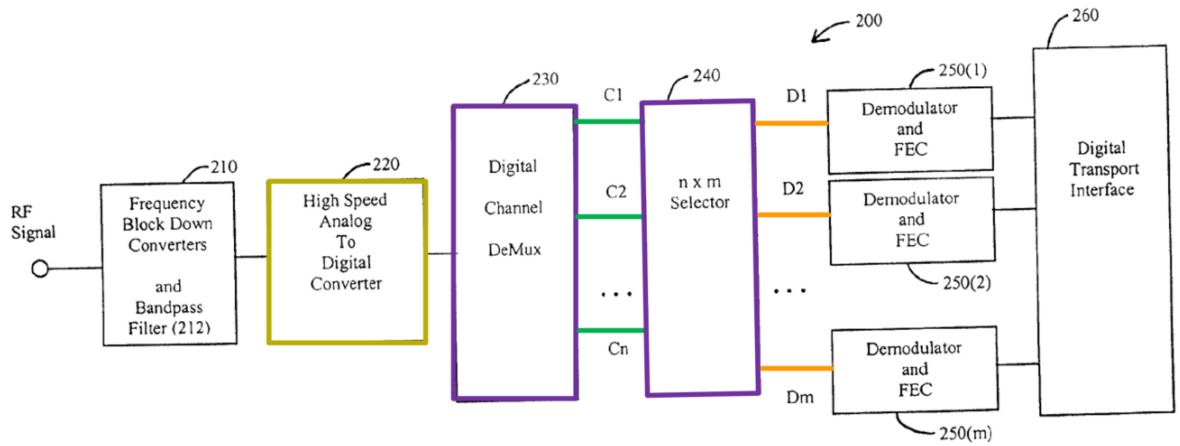

Ex. 1013, Fig. 2 (annotated)

Id., ¶¶136-139; Ex. 1013, [0028]-[0032], [0042], Fig. 2. The combination of the ***digital* channel demultiplexer 230** and ***digital* selector 240** is also a *digital* frontend because it processes digital signals—specifically the multi-channel digital RF signal—before demodulation, just as the '275 patent's digital frontend processes digital signals before demodulation. *Compare* Ex. 1013, [0028]-[0032], [0042], [0045], Fig. 2 *with* Ex. 1001, 5:56-6:19, Fig. 2; Ex. 1002, ¶137.

In sum, Zhang discloses selecting, by demultiplexer 230 (or alternatively the combination of demultiplexer 230 and selector 240) coupled to ADC 220, the target RF channels C_1-C_n (or alternatively selected RF channels D_1-D_m) from the multi-channel digital RF signal output by ADC 220, thereby disclosing [1E] in multiple ways. Ex. 1002, ¶140.

f. [1F] "outputting, by the DFE, the selected plurality of desired channels to at least one demodulator as a digital datastream, wherein the demodulator extracts information encoded in the digital datastream."

Zhang discloses **demultiplexer 230** (claimed "DFE") outputting the **target RF channels C_1-C_n** (claimed "selected plurality of desired channels" (*see* §VII.A.1.e, *supra*)) as a digital datastream to one or more **demodulators 250(1)-250(m)** (claimed "at least one demodulator") via **selector 240**:

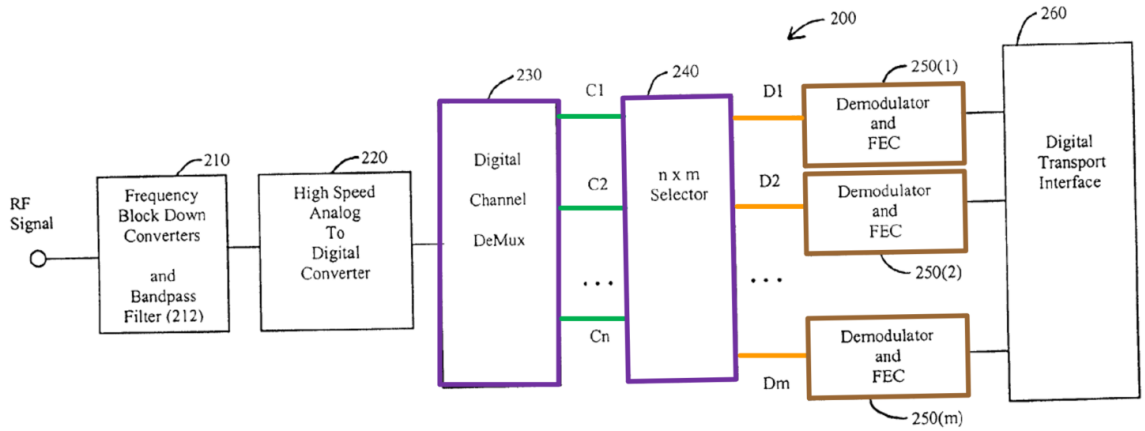

Ex. 1013, Fig. 2 (annotated)

Ex. 1013, [0028]-[0029], [0042], Fig. 2; Ex. 1002, ¶¶141-142. **Selector 240** selects **channels D_1-D_m** (which comprise any or all of **target RF channels C_1-C_n**) to feed the **target RF channels C_1-C_n** as a digital datastream to **demodulators 250(1)-250(m)**. Ex. 1013, [0028]-[0029], [0038]-[0039], [0047], claims 2-4, Figs. 2, 5; Ex. 1002, ¶143. In the disclosed embodiment where m=n, all of the **target RF channels C_1-C_n** are fed to **demodulators 250(1)-250(m)**. Ex. 1013, [0028]-[0029], [0038]-[0039], claims 2-4, 31-32; Ex. 1002, ¶143.

Zhang's Figure 5 provides an example of **selector 240**, showing how it feeds (e.g., time multiplexes) the **target RF channels C_1-C_n** through one or more data buses 520:

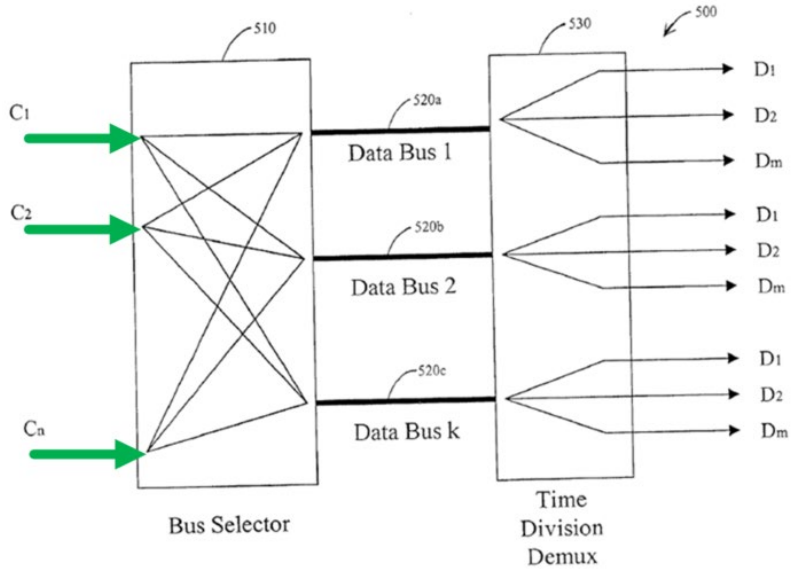

Ex. 1013, Fig. 5 (annotated)

Ex. 1013, [0038]-[0039], Fig. 5; Ex. 1002, ¶¶144-146. Because each **target RF channel C_1-C_n** is fed through a data bus and comprises digital data (e.g., a series of bits) for one or more content channels (e.g., providing video data streams), the target RF channels are output as a digital datastream. Ex. 1013, [0024], [0028]-[0029], [0038]-[0042], [0044], claim 3; Ex. 1002, ¶145.

Moreover, Zhang's **demodulators 250(1)-250(m)**, like the '275 patent's demodulators, perform demodulation, which entails extracting information encoded in the digital datastream. *Compare* Ex. 1013, [0005], [0007], [0011], [0029], [0042], claim 2 *with* Ex. 1001, 6:13-17; Ex. 1015, 6-7 (defining demodulation as

"reconversion of a modulated signal back into its original form by extracting the data from the modulated carrier"); Ex. 1002, ¶147. For example, Zhang's **demodulators 250(1)-250(m)** recover the bits of the video content that is encoded in the **target RF channel C_1-C_n**. Ex. 1013, [0005], [0007], [0029], [0042], [0045] claim 2; Ex. 1002, ¶147. For these reasons, Zhang discloses [1F].

Zhang also discloses [1F] with respect to the above-discussed alternative mapping: mapping the combination of demultiplexer 230 and all or part of selector 240 to the claimed "DFE" and selected RF channels D_1-D_m to the claimed "desired channels." Ex. 1002, ¶148. Specifically, Zhang discloses **selector 240** (part of the claimed "DFE" in this alternative mapping) outputting the **selected RF channels D_1-D_m** through data buses as a digital datastream to one or more **demodulators 250(1)-250(m)**:

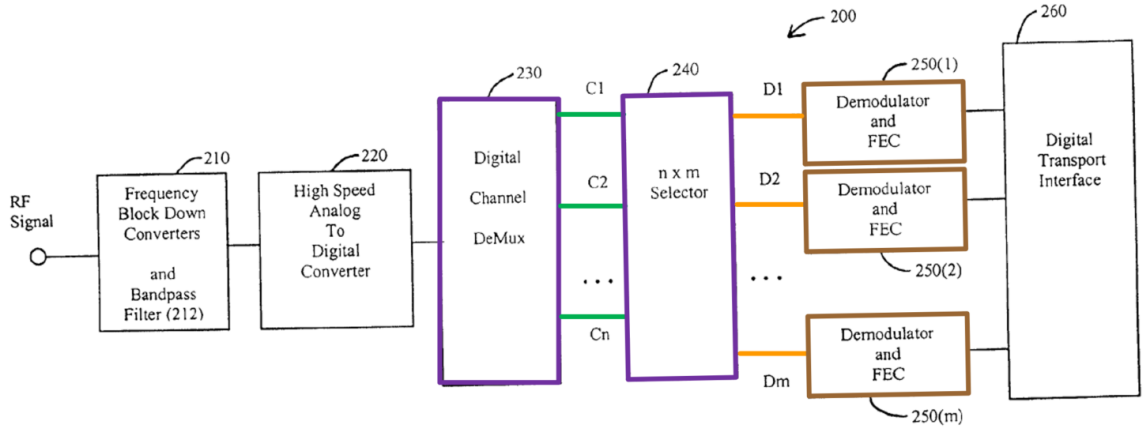

Ex. 1013, Fig. 2 (annotated)

Ex. 1013, [0029], [0038]-[0039], [0042], claims 2-4, Figs. 2, 5; Ex. 1002, ¶148. Because each **selected RF channel D_1-D_m** is fed through a data bus and comprises

digital data (e.g., a series of bits) for one or more content channels (e.g., providing video data streams), the selected RF channels are output as a digital datastream. Ex. 1013, [0024], [0028]-[0029], [0038]-[0042], [0044], claim 3; Ex. 1002, ¶149.

In sum, Zhang discloses outputting, by demultiplexer 230 (or alternatively the combination of demultiplexer 230 and selector 240), the target RF channels C_1-C_n (or alternatively selected RF channels D_1-D_m) to one or more demodulators 250(1)-250(m) as a digital datastream, wherein the demodulators 250(1)-250(m) extract information (e.g., video content) encoded in the digital datastream, thereby disclosing [1F] in multiple ways. Ex. 1002, ¶¶150-151.

For the reasons stated above, Zhang anticipates (ground A) and renders obvious (ground B) claim 1.

2. Dependent Claims 2-3 and 12-13

> **[2]/[12] "The [method of claim 1, wherein the DFE outputs]/[television receiver device of claim 11, wherein the DFE is operable to output] the digital datastream via a serial interface."**
>
> **[3]/[13] "The [method of claim 1, wherein the DFE outputs]/[television receiver device of claim 11, wherein the DFE is operable to output] the digital datastream via a parallel interface."**

As discussed above (*see* §VII.A.1.e-f, *supra*), Zhang's demultiplexer 230 alone, or in combination with all or part of selector 240, discloses the claimed "DFE." In each case, these components select channels C_1-C_n and output any or all

of these channels to one or more demodulators 250 via one or more data buses 520 (shown in Figure 5), and thus also meet the additional limitations of claims 2/12 and 3/13. Ex. 1013, [0029], [0038]-[0039], Figs. 2, 5; Ex. 1002, ¶¶152-154, 190-192. Zhang's digital datastream for the target RF channels C_1-C_n or for the selected RF channels D_1-D_m discloses the claimed "digital datastream." *See* §VII.A.1.f, *supra*.

Zhang's demultiplexer 230 outputs the digital datastream for the target RF channels C_1-C_n via selector 240 (exemplified in Figure 5). Ex. 1013, [0028]-[0029], [0038]-[0040], Fig. 5. Selector 240 includes a bus selector 510 that transfers the target RF channels C_1-C_n on the same data bus 520 (serially) or on different data buses 520 (in parallel), and thus discloses both the claimed "serial interface" and the claimed "parallel interface." Ex. 1013, [0038]-[0039], Fig. 5. Specifically, Zhang describes data buses 520 being used to: 1) send channels C_1-C_n across one bus "with the use of time division multiplexing," and/or 2) send channels C_1-C_n "through different data buses." Ex. 1013, [0038]-[0039], Fig. 5; Ex. 1002, ¶155.

These two scenarios are illustrated below. As shown on the left, one bus (e.g., Data Bus 1) receives data from each RF channel C_1-C_n (represented by green blocks with different cross hatch patterns) and sends the data sequentially in different time intervals (i.e., time division multiplexing). Ex. 1013, [0038]-[0039]; Ex. 1016, 79-80 (Figure 6-25); Ex. 1002, ¶155. As shown on the right, data for each RF channel

C_1-C_n is sent through a separate data bus. Ex. 1013, [0038]-[0039]; Ex. 1016, 79-80 (Figure 6-25); Ex. 1002, ¶155.

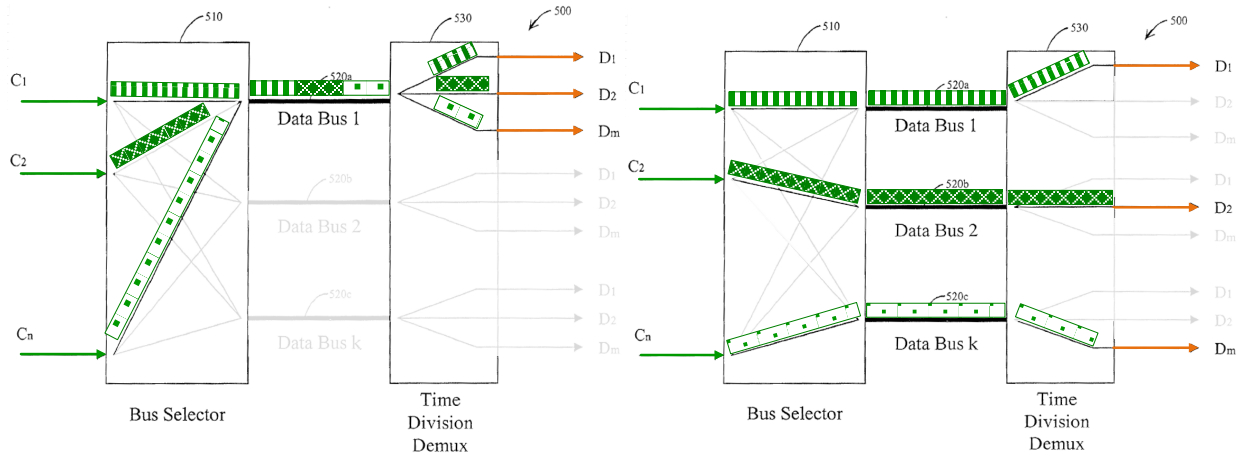

Ex. 1013, Fig. 5 (annotated)

Zhang's teaching of demultiplexer 230 (alone or with part of selector 240) outputting channels C_1-C_n as a digital datastream via one data bus of selector 240 using time-division multiplexing discloses that the DFE outputs "the digital datastream via a serial interface," as recited in claims 2/12, while Zhang's teaching of demultiplexer 230 (alone or with part of selector 240) outputting channels C_1-C_n as a digital datastream via multiple data buses of selector 240 (e.g., one per channel) discloses that the DFE outputs "the digital datastream via a parallel interface," as recited in claims 3/13. Ex. 1013, [0038]-[0039]; Ex. 1002, ¶¶156-159 (citing Ex. 1014, 30:31-42, 31:15-22; Ex. 1016, 79-80; Ex. 1017, 354-355). A POSITA would have understood that these two scenarios teach the use of a "serial interface" and "parallel interface," respectively, as those terms were known in the art. Ex. 1002, ¶¶157-158 (citing Ex. 1016, 31-34, 48-51, 79-80, Figure 6-25).

In addition, where the combination of **demultiplexer 230** and all of **selector 240** is the "DFE" and **selected RF channels D_1-D_m** form the "digital datastream" (*see* §VII.A.1.f, *supra*), Zhang also discloses claims 3/13 because **selector 240** outputs **channels D_1-D_m** via parallel lines (e.g., buses) to respective **demodulators 250(1)-250(m)**, as shown in Figure 2:

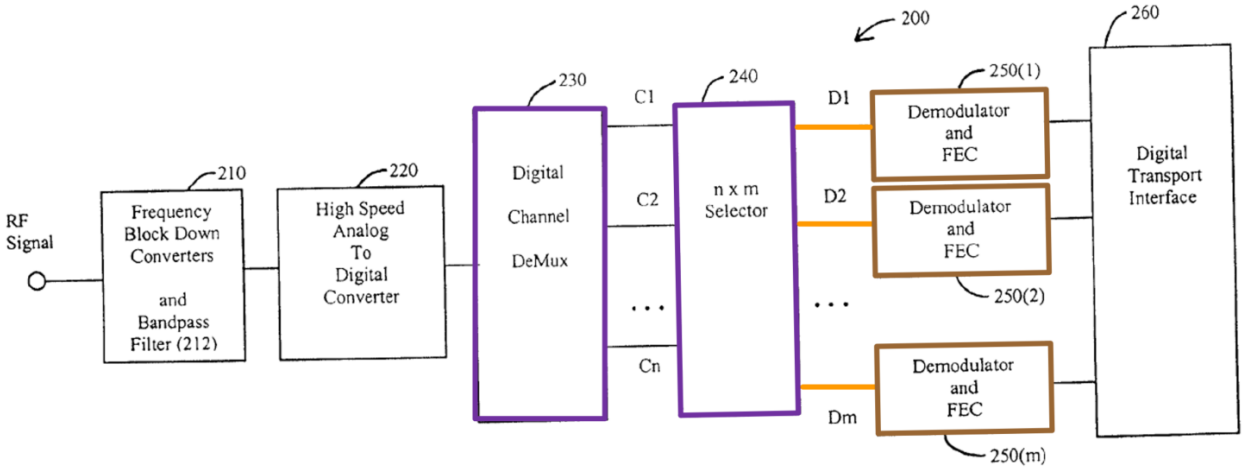

Ex. 1013, Fig. 2 (annotated)

Ex. 1013, [0029], [0042], claims 2-4, Figs. 2, 6; Ex. 1002, ¶160.

To the extent Patent Owner argues that Zhang does not disclose serial and parallel interfaces, implementing Zhang's demultiplexer 230 and/or selector 240 to output the RF channels (either C_1-C_n or D_1-D_m) via either interface would have been obvious as one of two conventional design choices that were well-known and used by POSITAs in integrated circuits designs at the time. Ex. 1002, ¶161; Ex. 1014, 30:31-42, 31:15-22; Ex. 1016, 79-80; Ex. 1017, 354-355. As the '275 patent concedes, outputting a digital data steam via serial (claims 2/12) or parallel (claims

3/13) interfaces were "commonly known methods." Ex. 1001, 7:16-20. At least in view of this Applicant Admitted Prior Art (AAPA), Zhang alone renders claims 2/12 and 3/13 obvious. Ex. 1002, ¶161.

Finally, Zhang's circuit would have been implemented "using standard-process CMOS" (Ex. 1013, [0044], [0048]), which a POSITA would have understood means that Zhang's circuit transmits bits over multiple separate wires (a parallel interface) or over one wire (a serial interface). Ex. 1016, 79-80 (Figure 6-25); Ex. 1002, ¶¶157-158, 161. A POSITA implementing the Zhang circuit in CMOS would have selected either or both of these options, both being obvious to try as identified, predictable choices having a high expectation of success. Ex. 1002, ¶¶76-77, 157-158, 161.

Thus, Zhang anticipates (ground A) and renders obvious (ground B) claims 2/12 and 3/13.

3. Dependent Claims 5 and 15

[5]/[15] "The [method of claim 1]/[television receiver device of claim 11], wherein the extracted information is stored for use in a digital video recorder (DVR)."

Zhang discloses that its system provides a front-end for a personal video recorder (PVR). Ex. 1013, [0045], Fig. 8 (showing PVR storage); Ex. 1002, ¶¶162-163. This means the information (e.g., video content) extracted from the RF channels D_1-D_m by Zhang's demodulators 250 (*see* §VII.A.1.f, *supra*) is for use in a

PVR (claimed "digital video recorder (DVR)") which stores such data for playback. Ex. 1002, ¶163. A PVR is another name for (or type of) a DVR. *Id.*, ¶164; Ex. 1051, [0018].

To the extent there is a difference between a PVR and DVR, it would have been obvious, given Zhang's teaching of using its extracted data for a PVR, to also or instead use that data for a DVR. Ex. 1002, ¶164. A POSITA would have been motivated to do this because a POSITA would have wanted Zhang's system to be more usable and practical (e.g., usable with various models of DVRs owned by various subscribers). *Id.* And, a POSITA would have had a reasonable expectation of success because sending data to a DVR that was being sent to a PVR is a simple substitution of one known element for another that performs the same video storage and playback function. *Id.*

Thus, Zhang anticipates (ground A) and renders obvious (ground B) claims 5/15. *Id.*, ¶¶162-164, 193-194.

4. Dependent Claims 7-10 and 17-20

> **[7]/[17] "The [method of claim 1]/[television receiver device of claim 11], wherein the plurality of desired channels comprises at least one television channel."**
>
> **[8]/[18] "The [method of claim 1]/[television receiver device of claim 11], wherein the plurality of undesired channels comprises at least one television channel."**

[9]/[19] "The [method of claim 1]/[television receiver device of claim 11], wherein the broadcast channels comprise satellite broadcast channels."

[10]/[20] "The [method of claim 1]/[television receiver device of claim 11], wherein the broadcast channels comprise cable broadcast channels."

Zhang discloses that the multi-channel analog RF signal—the input signal of claim 1 that comprises desired and undesired broadcast channels (*see* §VII.A.1.b, *supra*)—"can be sourced by a variety of systems such as satellite systems, terrestrial TV systems, cable systems, etc." Ex. 1013, [0023], [0041]. Zhang's system is designed "to handle multi-channel satellite, terrestrial TV (NTSC, ATSC, DVB-T, etc), and cable downstream signals." Ex. 1013, [0029]. Thus, Zhang discloses embodiments in which the channels of Zhang's multi-channel analog RF signal are satellite broadcast channels, television broadcast channels, cable broadcast channels, etc. Ex. 1002, ¶166.

Regarding claims 7/17, in embodiments where Zhang's multi-channel analog RF signal is sourced by "terrestrial TV systems," Zhang's target RF channels C_1-C_n and Zhang's selected RF channels D_1-D_m (each set alternatively being the claimed "desired channels" (*see* §VII.A.1.b, *supra*)) both comprise "at least one television channel," as claimed. Ex. 1013, [0023], [0029], [0041]; Ex. 1002, ¶¶165-168.

Regarding claims 8/18, in embodiments where Zhang's multi-channel analog RF signal is sourced by "terrestrial TV systems," Zhang's unwanted channels that

were not included among C_1-C_n and Zhang's unselected channels that were not included among D_1-D_m (each set alternatively being the claimed "undesired channels" (*see* §VII.A.1.b, *supra*)) both comprise "at least one television channel," as claimed. Ex. 1013, [0023], [0029], [0041]; Ex. 1002, ¶¶169-172.

Regarding claims 9/19, in embodiments where Zhang's multi-channel analog RF signal is sourced by "satellite systems," Zhang's RF channels within the multi-channel analog RF signal (claimed "broadcast channels" (*see* §VII.A.1.b, *supra*)) comprise "satellite broadcast channels," as claimed. Ex. 1013, [0023], [0029], [0041]; Ex. 1002, ¶¶173-174.

Regarding claims 10/20, in embodiments where Zhang's multi-channel analog RF signal is sourced by "cable systems," Zhang's RF channels within the multi-channel analog RF signal (claimed "broadcast channels" (*see* §VII.A.1.b, *supra*)) comprise "cable broadcast channels," as claimed. Ex. 1013, [0023], [0029], [0041]; Ex. 1002, ¶¶175-176.

Thus, Zhang anticipates (ground A) and renders obvious (ground B) claims 7-10 and 17-20. Ex. 1002, ¶¶165-176, 197-202.

5. Independent Claim 11

Claim 11 recites a television receiver device with the same components and functions thereof that were recited in method claim 1. Ex. 1002, ¶177. Thus, Zhang anticipates and renders obvious [11A]-[11F] for the same reasons discussed above

for [1A]-[1F], respectively. *See* §VII.A.1, *supra*. Zhang's demodulation circuit (e.g., multi-channel demodulator 200), and/or any television receiver that includes it, is the claimed "television receiver device." Ex. 1013, Abstract, [0004], [0023]-[0025], [0041], [0044]-[0047] (disclosing "a wide-band receiver" using the demodulation circuit); Ex. 1002, ¶¶178-179. Zhang's demodulation circuit comprises an input terminal for receiving the RF signal (claimed "input terminal"), down-converter 210 (claimed "radio front end"), ADC 220 (claimed "ADC"), demultiplexer 230 (claimed "digital frontend"), and selector 240 (alternatively part of, with the demultiplexer 230, the claimed "digital frontend"). Ex. 1002, ¶¶180-189.

B. Ground C: Claims 2, 3, 12, and 13 are Rendered Obvious by Zhang-Pandey

1. Dependent Claims 2 and 3

To the extent Zhang does not anticipate or render obvious claims 2 and 3, Zhang in view of Pandey ("Zhang-Pandey") teaches these claims. Ex. 1002, ¶¶203-204.

Pandey teaches creating specific serial and parallel interfaces when implementing a digital circuit design (such as Zhang's digital demodulation circuitry) on a field programmable gate array (FGPA) or application-specific integrated circuit (ASIC) chip. Ex. 1014, Abstract, 1:15-55, 2:4-12. The process

involves partitioning functional blocks (such as Zhang's demultiplexer 230, selector 240, and demodulators 250) to different regions of an integrated circuit chip (e.g., 301, 303, 305, 307 in Figure 3 below) and assigning wire traces (e.g., 351, 353, 355, 357) to interconnect the partitioned blocks. Ex. 1014, 1:56-60, 2:6-12, 2:64-3:5, 6:10-15, 11:6-19, 13:33-14:7; Ex. 1002, ¶205.

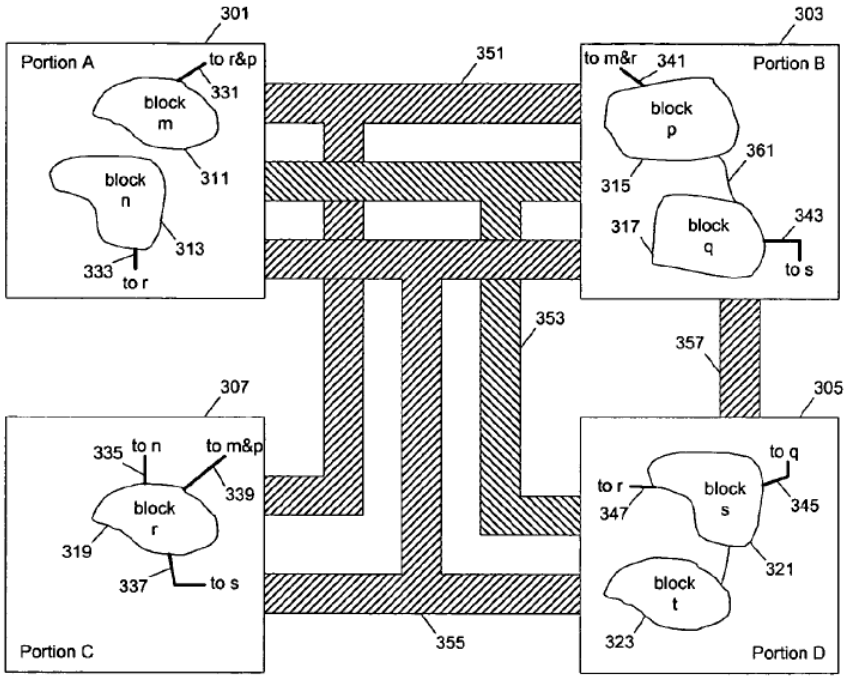

Ex. 1014, Fig. 3

Pandey recognizes that the number of signals (nets) between functional blocks may exceed the number of traces available inside a chip, and that in such cases, multiple signals must be time-multiplexed (i.e. transmitted serially) over a single trace. Ex. 1014, 10:24-53, 10:58-11:5, 29:44-58, 30:31-42. For example, as shown below, a plurality of parallel signals from logic block A 1613 in a first partition are multiplexed by multiplexer 1615 onto a single trace 1605, and then demultiplexed

back into parallel signals input to logic block B 1623 in a second partition. Ex. 1014, 30:31-52, Fig. 37; Ex. 1002, ¶206.

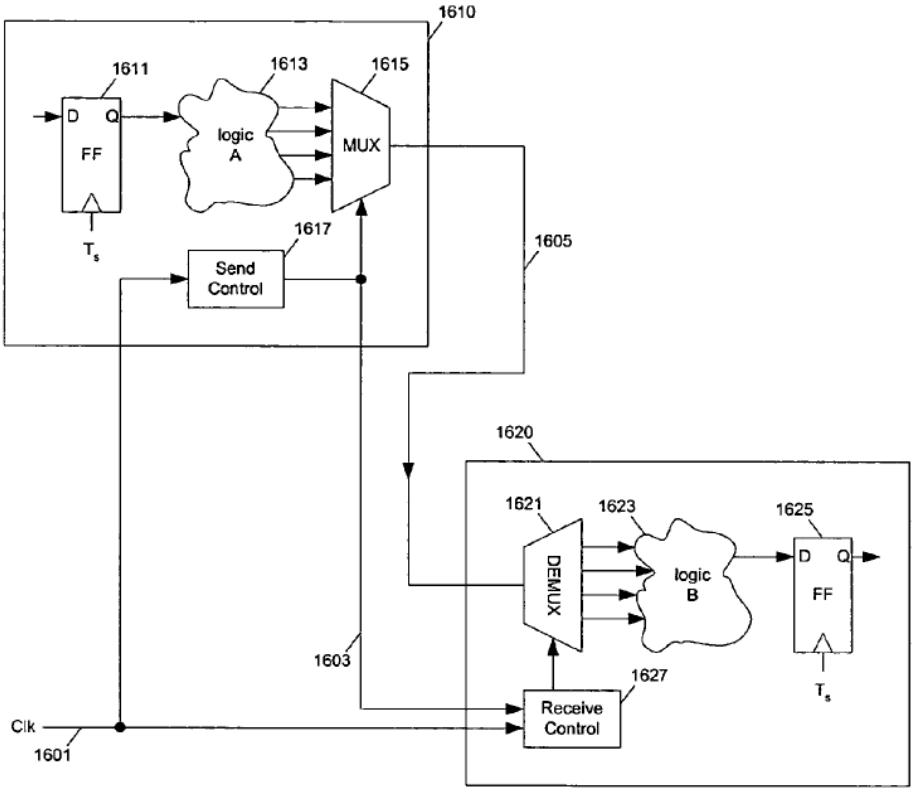

Ex. 1014, Fig. 37

Pandey's process optimizes the partitioning of blocks based on reducing the multiplexing ratio of wires to signals required between partitions. Ex. 1014, 5:50-53, 6:11-15, 6:44-53, 7:13-19, 29:44-30:9, 30:53-31:12, 31:56-63, Figs. 38-39. Pandey's optimization produces layouts that time-multiplex signals through a serial interface between partitions, and other layouts that send signals via individual dedicated traces with no multiplexing (i.e., a parallel interface). Ex. 1014, 31:15-22, 32:7-15. Thus, Pandey teaches both serial and parallel interfaces for transferring signals between digital functional blocks, with the selection between the two

interfaces simply being dependent upon the area and interconnect resources of a particular integrated chip. Ex. 1014, 11:6-19, 13:33-55, 31:20-22, 32:12-15, Figs. 2-3; Ex. 1002, ¶207. Accordingly, in one example of Zhang-Pandey, Zhang's demultiplexer 230 (alone or with selector 240) would have output channels C_1-C_n (or alternatively D_1-D_m) as a digital datastream to demodulators 250 via a serial interface (like Pandey's single trace 1605), thereby teaching claim 2. Ex. 1002, ¶208. In another example of Zhang-Pandey, Zhang's demultiplexer 230 (alone or with selector 240) would have output channels C_1-C_n (or alternatively D_1-D_m) as a digital datastream to demodulators 250 via a parallel interface (like Pandey's parallel traces), thereby teaching claim 3. Ex. 1002, ¶208.

A POSITA would have been motivated to apply Pandey's dedicated (i.e., parallel) and/or time-multiplexed (i.e., serial) interconnection to the interconnection between Zhang's demultiplexer 230, digital selector 240, and/or demodulators 250 because Pandey provides a useful, ubiquitously well-known way to make such connections with serial and parallel interfaces and Zhang calls for implementing these digital components on a chip and they need to be connected for Zhang's system to function properly. Ex. 1002, ¶209. Also, Zhang teaches optimizing the real estate needed for implementing the digital portion of its system on a single chip, and the process described in Pandey would have beneficially supported this optimization. Ex. 1013, [0029], [0037], [0044], [0047]-[0048]; Ex. 1014, 1:20-2:12, 6:10-15; Ex.

1002, ¶209. A POSITA would have sought ways to reduce the area needed for implementing Zhang on a chip and would have looked to Pandey's optimization process. Ex. 1002, ¶209. In doing so, a POSITA would have understood that Pandey teaches using either serial or parallel interfaces for connecting digital components and would have found it obvious to apply either type of interface to transfer the digital datastream output from Zhang's demultiplexer 230 and/or selector 240 to Zhang's demodulators 250. *Id.*

Zhang-Pandey, which uses parallel and/or serial interfaces to send Zhang's datastream from demultiplexer 230 and/or selector 240 to demodulators 250, is the predictable result of combining prior art elements (Zhang's circuit design and Pandey's parallel and serial interconnections in an integrated circuit chip) according to known methods (Pandey's process for implementing circuit designs with parallel and serial interfaces). *Id.*, ¶¶210-211. Zhang-Pandey also merely entails using Pandey's known technique for transferring data via serial or parallel wire traces in an integrated circuit to improve Zhang's similar integrated circuit in the same way Pandey applies its technique. *Id.*

Further, a POSITA would have had a reasonable expectation of success, because Pandey's optimization utilized processes, such as floor planning, partitioning, and trace routing, that were standard and well within a POSITA's skill set. Ex. 1014, 1:20-2:38; Ex. 1002, ¶211. A POSITA would have been familiar

with implementing serial and parallel interfaces to transfer data between circuit components. Ex. 1001, 7:16-20; Ex. 1002, ¶¶76-78, 211.

2. Dependent Claims 12 and 13

Claims 12 and 13 are identical to claims 2 and 3, respectively, but depend on the "television receiver device of claim 11" and recite that "the DFE is operable to output." Thus, claims 12 and 13 are rendered obvious by Zhang-Pandey for the same reasons discussed above for claims 2 and 3. *See* §VII.B.1, *supra*; Ex. 1002, ¶¶212-213.

C. Ground D: Claims 2 and 12 are Rendered Obvious by Zhang-Zhang '933

To the extent Zhang does not anticipate or render obvious claims 2 and 12, Zhang in view of Zhang '933 ("Zhang-Zhang '933") teaches these claims. Ex. 1002, ¶214.

Zhang '933 discloses a multi-channel demodulator including a single **demodulation engine 44** for processing data from multiple RF channels by processing the data for one channel at a time:

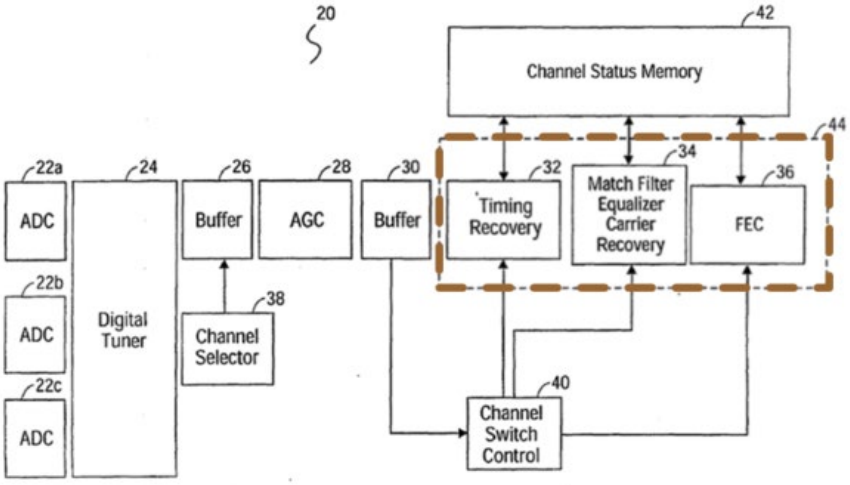

FIG. 3

Ex. 1077, Fig. 3 (annotated)

Ex. 1077, Abstract, [0006]-[0007], [0009], [0018], [0022]-[0026], [0028]; Ex. 1002, ¶¶215-216. Zhang '933 also teaches a number of serial interfaces (e.g., the single "Data Out" line from Figure 6 showing the FIR filter used in digital tuner 24, or the single line from buffer 30 to channel switch control 40 in Figure 3) along the path for transferring the digital data of the RF channels from digital tuner 24 to demodulation engine 44. Ex. 1077, [0021]-[0026], [0028]-[0029]; Ex. 1002, ¶¶216, 220.

It would have been obvious to modify Zhang's circuit to use a single demodulator (like Zhang '933's demodulation engine 44), instead of Zhang's multiple demodulators 250(1)-(m), to demodulate the selected RF channels D_1-D_m. Ex. 1002, ¶217. For example, it would have been obvious to replace Zhang's multiple demodulators 250(1)-(m) with a single demodulator (like Zhang '933's demodulation engine 44) that demodulates selected RF channels D_1-D_m one at a

time. *Id.* As part of such combination, a POSITA would have connected Zhang's selector 240 to the single demodulator via a serial interface because a serial interface was a well-known interface for connecting one component to another and a POSITA would have readily recognized it as a solution for feeding the channel data for one channel at a time to the single demodulator. *Id.* (citing Ex. 1076, 6:50-58, Fig. 4). Accordingly, in Zhang-Zhang '933, demultiplexer 230 and selector 240 together (claimed "DFE") output, or are operable to output, channels D_1-D_m as a digital datastream via a serial interface to a single demodulator, thereby teaching claims 2 and 12. Ex. 1002, ¶217.

A POSITA would have been motivated to carry out the Zhang-Zhang '933 combination to use a single demodulator and serial interface for sending channel data thereto because using a single demodulator (instead of multiple demodulators) and a single-wire serial interface (instead of a multi-wire parallel interface) reduces the amount of circuitry in the system. *Id.*, ¶218. The reduced amount of circuitry translates into reduced costs, reduced use of space on the chip, and reduced power consumption. *Id.* These benefits would have motivated a POSITA to arrive at Zhang-Zhang '933. *Id.* Indeed, Zhang provides express motivation for a POSITA to reduce the size of the circuit on the chip and to reduce power consumption and costs by reducing the number of circuit elements needed. Ex. 1013, [0008], [0026], [0037]; Ex. 1002, ¶218. Zhang '933 also teaches that a single demodulator reduces

costs and improves efficiency and scalability, and therefore also provides motivation for Zhang-Zhang '933. Ex. 1077, [0003], [0005], [0007], [0009]; Ex. 1002, ¶218.

A POSITA would have expected success in Zhang-Zhang '933 because implementing a serial interface to transfer data between circuit components was "commonly known." Ex. 1001, 7:16-20; Ex. 1002, ¶219.

D. Ground E: Claims 4 and 14 are Rendered Obvious by Zhang-Mirabbasi[5]

> **"The [method of claim 1/television receiver device of claim 11], wherein the ADC comprises:**
>
> **a first ADC configured to generate a digital in-phase signal; and**
>
> **a second ADC configured to generate a digital quadrature signal."**

While Zhang's Figure 2 circuit is "exemplary" (Ex. 1013, [0023]), Zhang does not expressly disclose ADC 220 (claimed "ADC" (*see* §VII.A.1.d, *supra*)) comprising two separate converters for generating in-phase and quadrature signals, as required in claims 4 and 14. Ex. 1002, ¶¶221-223. Zhang in view of Mirabbasi ("Zhang-Mirabbasi"), however, teaches these claims.

[5] Although Zhang-Mirabbasi (the combination for Ground E) is relied on for all of claims 4, 11-15, and 17-20, only claims 4 and 14 are addressed here. Zhang-Mirabbasi is discussed again below in case some terms are given means-plus-function constructions. *See* §VII.F.2, *infra*.

Mirabbasi provides a tutorial of known RF receiver architectures used for receiving digitally-modulated RF signals. Ex. 1018, 4, 11; Ex. 1002, ¶224. As shown below (which is a composite of Zhang's Figures 2 and 3 alongside Mirabbasi's Figure 10), Mirabbasi depicts a "Low-IF Receiver" having the same architecture as that in Zhang, which includes a RF analog frontend (**red**) that performs frequency downconversion of the analog input to an intermediate frequency (IF), followed by an analog-to-digital converter (**gold**) that digitizes the analog IF signal, followed by a digital multiplexer (**purple**) that further downconverts the digitized signal to a baseband signal, which is then processed by additional digital circuitry to demodulate the signal and recover the modulated data. Ex. 1018, 9-10, Fig. 10; *see also* Ex. 1025, 272, 279-280; Ex. 1034, 54-63; Ex. 1013, [0023]-[0029], Fig. 2; Ex. 1002, ¶¶224-225.

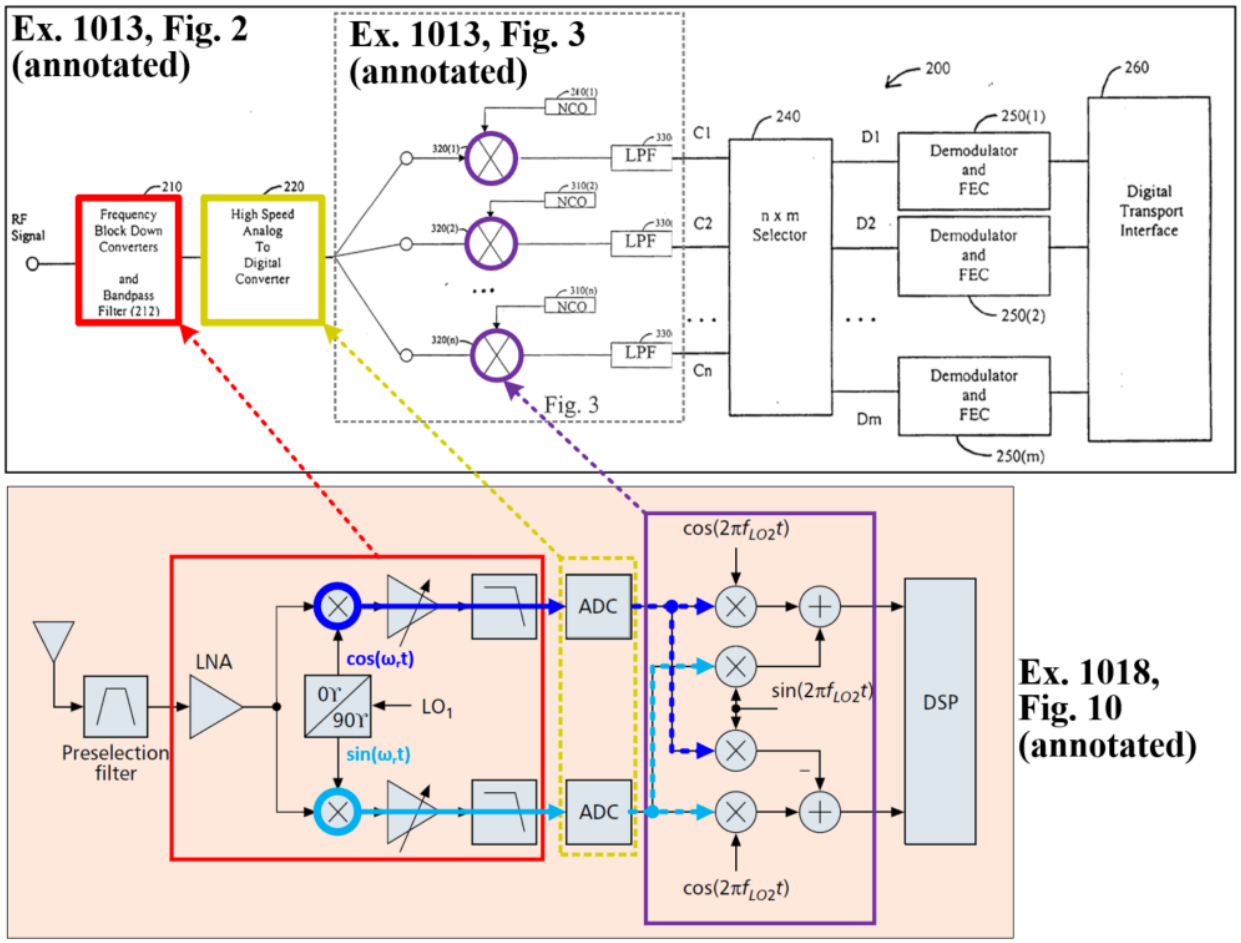

Ex. 1018, Fig. 10 (annotated)

It would have been obvious to implement Zhang's **converter 210**, **ADC 220**, and each bank of **complex multipliers 320(1…n)** of demultiplexer 230 with Mirabbasi's corresponding circuitry, as shown above. Ex. 1002, ¶¶224-228. This Zhang-Mirabbasi combination results in Zhang's ADC 220 having two ADCs like Mirabbasi—one (claimed "first ADC") for generating a digital *in-phase* signal (**dashed blue line**) from an analog in-phase signal (**solid blue line**) and another (claimed "second ADC") for generating a digital *quadrature* signal (**dashed light blue line**) from an analog quadrature signal (**solid light blue line**), thereby teaching claims 4 and 14. Ex. 1018, 5-6 (describing mixing to produce in-phase and

quadrature components), 137-138, Figs. 2, 10; Ex. 1002, ¶¶227-228, 232-233; *see also* §V.D, *supra*. Implementing Zhang based on Mirabbasi to arrive at Zhang-Mirabbasi does not change the basic operations of Zhang's demodulation circuit that were relied on for claim 1. Ex. 1002, ¶228. Thus, Zhang-Mirabbasi meets the limitations of claim 1 for the same reasons that Zhang meets them as explained above. *See* §VII.A.1, *supra*.

As described in Mirabbasi, the "low-IF" architecture (Mirabbasi's Figure 10) overcomes a number of issues found in other common RF receiver designs. Ex. 1018, 6-11; Ex. 1002, ¶229. Its advantages include eliminating DC offset in the baseband signals, making the sampling of the IF signal with ADCs more feasible because the IF signal is at a lower frequency, and eliminating gain and phase mismatches between the in-phase and quadrature signals because they are partially downconverted and corrected digitally. Ex. 1018, 8, 138; Ex. 1002, ¶229. Because of these advantages, a POSITA would have been motivated to use Mirabbasi's low-IF design—e.g., its analog complex mixer (**red**) including first (**blue circle**) and second (**light blue circle**) mixers, the pair of ADCs (**gold**), and its complex mixer (**purple box**)—to implement Zhang's corresponding receiver components as described above. Ex. 1002, ¶229. In particular, issues with DC offset are significant in CMOS, which is a technology used by Zhang's receiver, and thus a POSITA

would have found Mirabbasi's low-IF architecture, which eliminates DC offset, to be particularly beneficial. *Id.*; Ex. 1013, [0044], [0048]; Ex. 1018, 8-9.

Moreover, Zhang-Mirabbasi would have been nothing more than using a known technique (Mirabbasi's generation of I and Q components of a downconverted signal and performing analog-to-digital conversion on each component before complex mixing each component) to improve a similar device (Zhang's receiver having the same basic architecture as Mirabbasi—downconverter 210 connected to ADC 220 connected to complex multipliers 320) in the same way (using Mirabbasi's low-IF receiver structures to provide its benefits as described by Mirabbasi). Ex. 1002, ¶230. Zhang-Mirabbasi also combines known elements (Zhang's bank of complex multipliers 320, selector 240, and demodulators 250 with Mirabbasi's low-IF receiver architecture including circuitry for splitting the input RF signal into in-phase and quadrature signals and separately processing them) according to known methods of implementing various architectures as taught by Mirabbasi to yield predictable results (the separation of Zhang's multi-channel RF signal into in-phase and quadrature signals, analog-to-digital conversion of each signal, and then demultiplexing of each signal into separate channels). *Id.*

Mirabbasi's low-IF architecture uses components that were common and well-known to a POSITA, and the basic architecture of the low-IF receiver matches that of Zhang's receiver, thus requiring little or no deviation in Mirabbasi's

implementation when applied to Zhang. *Id.*, ¶231; Ex. 1025, 279-280; Ex. 1034, 63. Further, the implementation of Mirabbasi's receiver was taught in basic textbooks and well within a POSITA's skillset. Ex. 1002, ¶231; Ex. 1025, 279-280; Ex. 1034, 63. For these reasons, a POSITA would have had an expectation of success in Zhang-Mirabbasi. Ex. 1002, ¶231.

E. Ground F: Claims 5-6 and 15-16 are Rendered Obvious by Zhang-Dong

1. Dependent Claims 5 and 15

> **"The [method of claim 1/television receiver device of claim 11], wherein the extracted information is stored for use in a digital video recorder (DVR)."**

To the extent Zhang does not anticipate or render obvious claims 5 and 15, Zhang in view of Dong ("Zhang-Dong") teaches them. *Id.*, ¶¶234-238.

Dong discloses outputting demodulated digital data as a **PVR output stream** for storage in a personal video recorder (PVR) (claimed "digital video recorder (DVR)"):

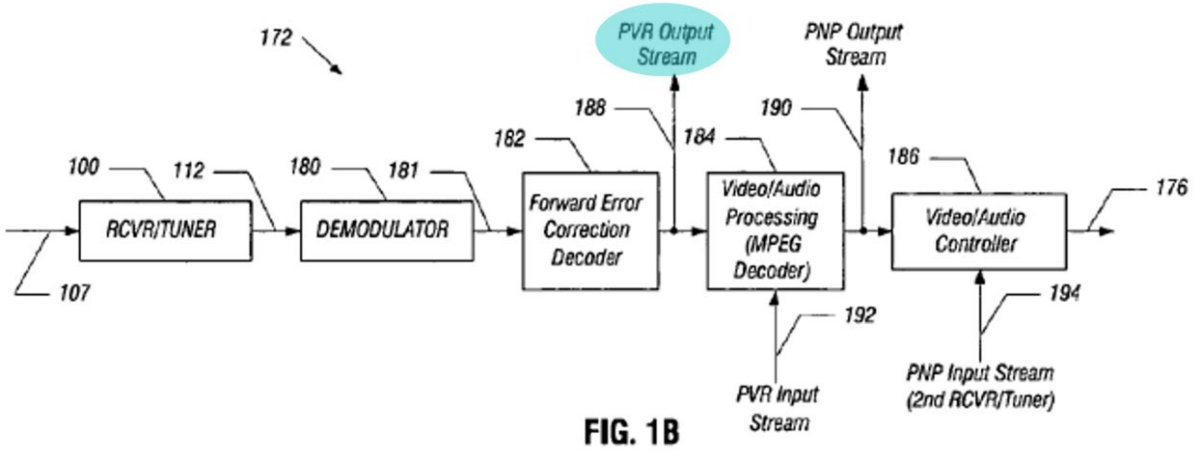

Ex. 1078, Fig. 1B (annotated)

Id., ¶¶235-236; Ex. 1078, [0027], [0082], Fig. 1B. A PVR is another name for (or type of) a DVR. Ex. 1002, ¶237; Ex. 1078, [0027], [0082]; Ex. 1051, [0018].

It would have been obvious to combine Zhang and Dong such that information extracted and output by Zhang's demodulators 250 (claimed "extracted information" (*see* §VII.A.1.f, *supra*)) is stored for use in a DVR (based on Dong's teaching of outputting its PVR output stream for storage in its PVR), thereby teaching claims 5 and 15. Ex. 1002, ¶¶238, 249. For example, it would have been obvious to modify Zhang in view of Dong to store information extracted from channels D_1-D_m in a PVR (or DVR) for subsequent use in the PVR (or DVR). *Id.*

A POSITA would have been motivated to carry out Zhang-Dong to store the extracted information in a DVR because a POSITA would have wanted to make the information (e.g., content) available at a later time (e.g., for playback of the content after it was broadcasted). Ex. 1078, [0027]; Ex. 1002, ¶¶238-239. Storing the extracted information in the DVR gives a subscriber/consumer additional playback features (e.g., rewind, fast-forward, etc.) and the option to access the information one or more times when it is convenient. Ex. 1002, ¶239. A POSITA would have appreciated that subscribers desire these playback features and on-demand access. *Id.*; Ex. 1013, [0005]. To meet this demand and increase revenues, a POSITA would have sought to improve the subscriber experience by offering Zhang-Dong in which

demodulated information is stored for use in a DVR. Ex. 1002, ¶239; Ex. 1013, [0044], [0048].

Zhang-Dong merely combines known elements (Zhang's Figure 2 circuit including demodulators 250 and Dong's PVR/DVR) according to known methods (Dong's connecting of a demodulator to a PVR/DVR to provide data to be stored in the PVR) to yield predictable results (Zhang's demodulators 250 connected so the output of Zhang's demodulators 250 is stored for use in the PVR/DVR). Ex. 1002, ¶240. Zhang-Dong would have been nothing more than using a known technique (Dong's outputting of a PVR output stream from a demodulator to a PVR/DVR) to improve a similar device (Zhang's Figure 2 receiver circuit having a demodulator similar to Dong's receiver circuit having demodulator 180) in the same way (by outputting extracted information from Zhang's demodulator 250 to a DVR to enable later access to the extracted information). *Id.*

A POSITA would have expected success in Zhang-Dong because connecting a DVR to Zhang's demodulators 250 to output information extracted from demodulators 250 to the DVR would have been a routine skill for the POSITA. *Id.*, ¶241; Ex. 1013, [0048]; Ex. 1078, [0026]-[0027], [0106], Figs. 1A-1B; Ex. 1001, 1:55-58.

2. Dependent Claims 6 and 16

> **"The [method of claim 1/television receiver device of claim 11], wherein the extracted information is output for a picture-in-picture display."**

Zhang's Figure 2 circuit simultaneously demodulates multiple channels thereby providing the foundation for offering picture-in-picture service. Zhang in view of Dong (also "Zhang-Dong"[6]) clearly teaches outputting the demodulated channels for a picture-in-picture display and thus teaches claims 6 and 16. Ex. 1002, ¶242.

Dong discloses a circuit, having a tuner 100 and demodulator 180, that outputs demodulated digital data as a PNP output stream 190 (**magenta**) for displaying a picture-in-picture feed along with a primary feed on a TV (claimed "picture-in-picture display"):

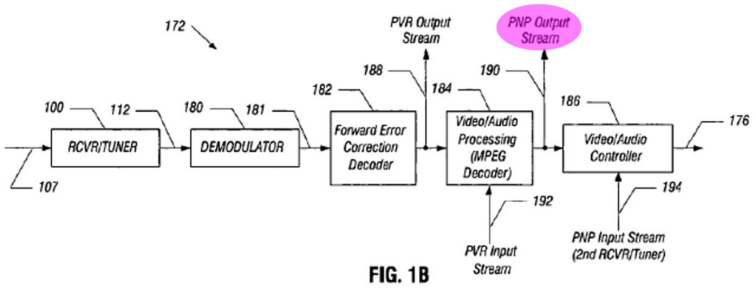

Ex. 1078, Fig. 1B (annotated)

[6] Zhang-Dong in this section (§VII.E.2) refers to a combination of Zhang and Dong that teaches claims 6 and 16 and that does not necessarily include the Zhang-Dong combination from the prior section (§VII.E.1).

Id., ¶243; Ex. 1078, [0027], [0082], Fig. 1B. Dong's Figure 1B also shows that a PNP input stream 194 (which is the PNP output stream of another instance of this circuit having another tuner) is combined with a primary viewing feed by a video/audio controller 186 to generate an output signal 176 for providing the picture-in-picture display on a TV. Ex. 1078, [0027]; Ex. 1002, ¶244.

It would have been obvious to combine Zhang and Dong such that the information extracted and output by Zhang's demodulators 250 (claimed "extracted information" (*see* §VII.A.1.f, *supra*)) is output for displaying a picture-in-picture feed on a TV (based on Dong's teaching of outputting its PNP output stream for display), thereby teaching claims 6 and 16. Ex. 1002, ¶¶245, 250. For example, it would have been obvious to modify Zhang in view of Dong to output information extracted from channels D_1-D_m as a PNP output stream to a controller that generates an output signal (like Dong's video/audio controller 186 that generates output signal 176) for displaying a picture-in-picture feed on a TV. *Id.*, ¶245.

A POSITA would have been motivated to carry out the Zhang-Dong combination to output the extracted information for a PNP display because a POSITA would have wanted to enhance the subscriber's experience by enabling a subscriber to watch multiple television channels at the same time. Ex. 1078, [0082] (explaining that "it may later be desired by a user…to concurrently tune into a second signal channel, for example, for use with PnP"); Ex. 1002, ¶246. A POSITA

would have appreciated that a subscriber may want to watch two different television programs being broadcast at the same time, or that multiple people within the subscriber's household may want to watch different programs on the same television. Ex. 1002, ¶246. Thus, there would have been demand by subscribers for receivers capable of providing picture-in-picture, which was a well-known feature for addressing these situations. *Id.* With the goal of attracting and retaining subscribers to increase revenues, a POSITA would have sought to improve the subscriber experience by offering Zhang-Dong in which demodulated information is output for picture-in-picture display. *Id.*; Ex. 1013, [0044], [0048].

Zhang-Dong merely combines known elements (Zhang's Figure 2 circuit including demodulators 250 and Dong's circuitry including connections for carrying a primary viewing feed and PNP viewing feed and video/audio controller 186 for combining the feeds for display on a TV) according to known methods (Dong's processing and feeding of demodulator outputs to a TV) to yield predictable results (a picture-in-picture display formed from the data output by two of Zhang's demodulators 250). Ex. 1002, ¶247. Zhang-Dong also would have been nothing more than using a known technique (Dong's outputting a PNP output stream from a demodulator to video/audio controller 186 that combines it with a primary viewing feed for a picture-in-picture display) to improve a similar device (Zhang's Figure 2 receiver circuit having a demodulator similar to Dong's receiver circuit having a

demodulator 180) in the same way (by outputting extracted information usable for a picture-in-picture display). *Id.*

A POSITA would have expected success in Zhang-Dong because using demodulator outputs for two channels to get two feeds for a picture-in-picture display was well-known and the combination does not involve creating any new hardware or software. *Id.*, ¶248; Ex. 1013, [0048]; Ex. 1078, [0027], [0082], [0106], Fig. 1B; Ex. 1001, 1:55-58.

F. Alternate Arguments and Grounds based on Means-Plus-Function Construction of "radio front end" and/or "digital frontend"

1. Alternate Arguments for Claims 11-13, 15, and 17-20 based on Grounds A/B, for Claims 12-13 based on Ground C, for Claim 12 based on Ground D, and for Claims 15-16 based on Ground F

This section explains that Zhang still anticipates and renders obvious the "radio front end" in independent claim 11 and/or "digital frontend (DFE)" in claims 11-13 if those terms are construed to be means-plus-function terms. Ex. 1002, ¶251.

Radio front end. As discussed (*see* §VII.A.1.c, §VII.A.5, *supra*), Zhang's down-converter 210 is the claimed "radio front end." Zhang's down-converter 210 has the same (or equivalent) structure as the radio front ends 210, 410 of the '275 patent that are identified as potential corresponding structures (*see* §VI.E.1, *supra*). Ex. 1002, ¶252. Specifically, Zhang's down-converter 210 multiplies the multi-channel analog RF signal by a reference signal and therefore includes a mixer like

the ’275 patent’s mixers 211, 221 in radio front end 210 and mixers 411, 421 in radio front end 410 that multiply the RF input by a frequency signal 205, 405. *Id.*; *compare* Ex. 1013, [0025], Fig. 2 *with* Ex. 1001, 4:65-5:21, 7:31-41, Figs. 2, 4. And, Zhang’s down-converter 210 includes a bandpass filter 212 like the ’275 patent’s filters 215, 225 in radio front end 210 and filters 415, 425 in radio front end 410. Ex. 1002, ¶252; *compare* Ex. 1013, [0026], Fig. 2 *with* Ex. 1001, 5:22-37, 7:41-46, Figs. 2, 4. Zhang’s down-converter 210 also performs the same claimed function of “process[ing] the input signal,” as explained above (*see* §VII.A.1.c, *supra*).

Further, Zhang’s down-converter 210 and the ’275 patent’s radio front ends 210, 410 perform the same function of processing the input signal in the same way—down-converting an analog RF input signal by multiplying the input signal with a reference signal and then filtering—to achieve the same result of obtaining a downconverted analog RF signal. Ex. 1002, ¶253; Ex. 1013, [0025]-[0026]; Ex. 1001, 2:64-3:1, 4:43-5:47.

Digital frontend (DFE). As discussed (*see* §§VII.A.1.e-f, §VII.A.5, *supra*), Zhang’s demultiplexer 230 alone or with all or part of selector 240 is the claimed “digital frontend.” Zhang’s demultiplexer 230 has the same (or equivalent) structure as the digital front end 230 of the ’275 patent that is identified as potential corresponding structure (*see* §VI.E.2, *supra*). Ex. 1002, ¶¶254-255. For example, as shown below, Zhang’s demultiplexer 230 includes a bank of **complex multipliers**

320(1…n) that are each followed by one of **low pass filters 330(1…n)**, just as the ’275 patent’s digital front end 230 includes a bank of N **complex mixers 250** that are each followed by one of **low pass filters 260a-n**:

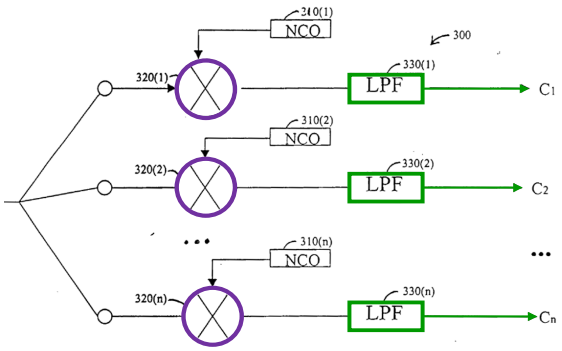

Fig. 3

Ex. 1013, Fig. 3 (annotated)

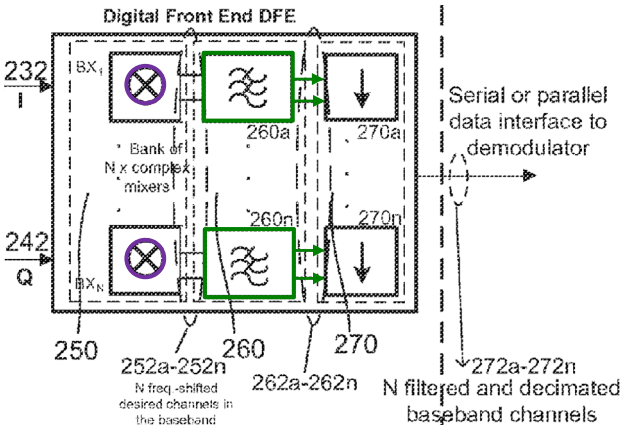

Ex. 1001, Fig. 2 (annotated)

Ex. 1002, ¶255; *compare* Ex. 1013, [0028], [0030]-[0032], Figs. 2-3 *with* Ex. 1001, 5:56-7:15, Figs. 2-3. Zhang’s demultiplexer 230, alone or in combination with all or part of selector 240, also performs the same claimed functions of “select[ing] the plurality of desired channels from the digitized signal and output[ting] the selected plurality of desired channels to at least one demodulator as a digital datastream,” ([11E]-[11F]), “output[ting] the digital datastream via a serial interface” (claim 12), and “output[ting] the digital datastream via a parallel interface” (claim 13), as explained above (*see* §§VII.A.1.e-f, §VII.A.2, *supra*). Ex. 1002, ¶256.

Further, Zhang’s demultiplexer 230, alone or in combination with all or part of selector 240, and the ’275 patent’s digital front end 230 perform the same function of selecting and outputting desired channels in the same way—by downconverting

a desired channel to baseband and then low-pass filtering to isolate the desired channel—to achieve the same result of outputting a plurality of desired channels as a digital datastream. Ex. 1002, ¶257.

Thus, Zhang (Grounds A/B) anticipates and renders obvious claims 11-13, 15, and 17-20 (*see* §VII.A, *supra*), Zhang-Pandey (Ground C) renders obvious claims 12-13 (*see* §VII.B, *supra*), Zhang-Zhang '933 (Ground D) renders obvious claim 12 (*see* §VII.C, *supra*), and Zhang-Dong (Ground F) renders obvious claims 15-16 (*see* §VII.E, *supra*) for the reasons stated above, even if "radio front end" and/or "digital frontend" are given means-plus-function constructions. Ex. 1002, ¶258.

2. Alternate Arguments for Claims 11-15 and 17-20 based on Zhang-Mirabbasi (Ground E)

If "radio front end" and/or "digital frontend" in claims 11-13 are construed as means-plus-function terms, Zhang-Mirabbasi also teaches them. Ex. 1002, ¶259.

As discussed for claims 4 and 14 (*see* §VII.D, *supra*), Zhang-Mirabbasi implements Zhang's **converter 210**, **ADC 220**, and each bank of **complex multipliers 320(1…n)** of demultiplexer 230 with Mirabbasi's corresponding circuitry:

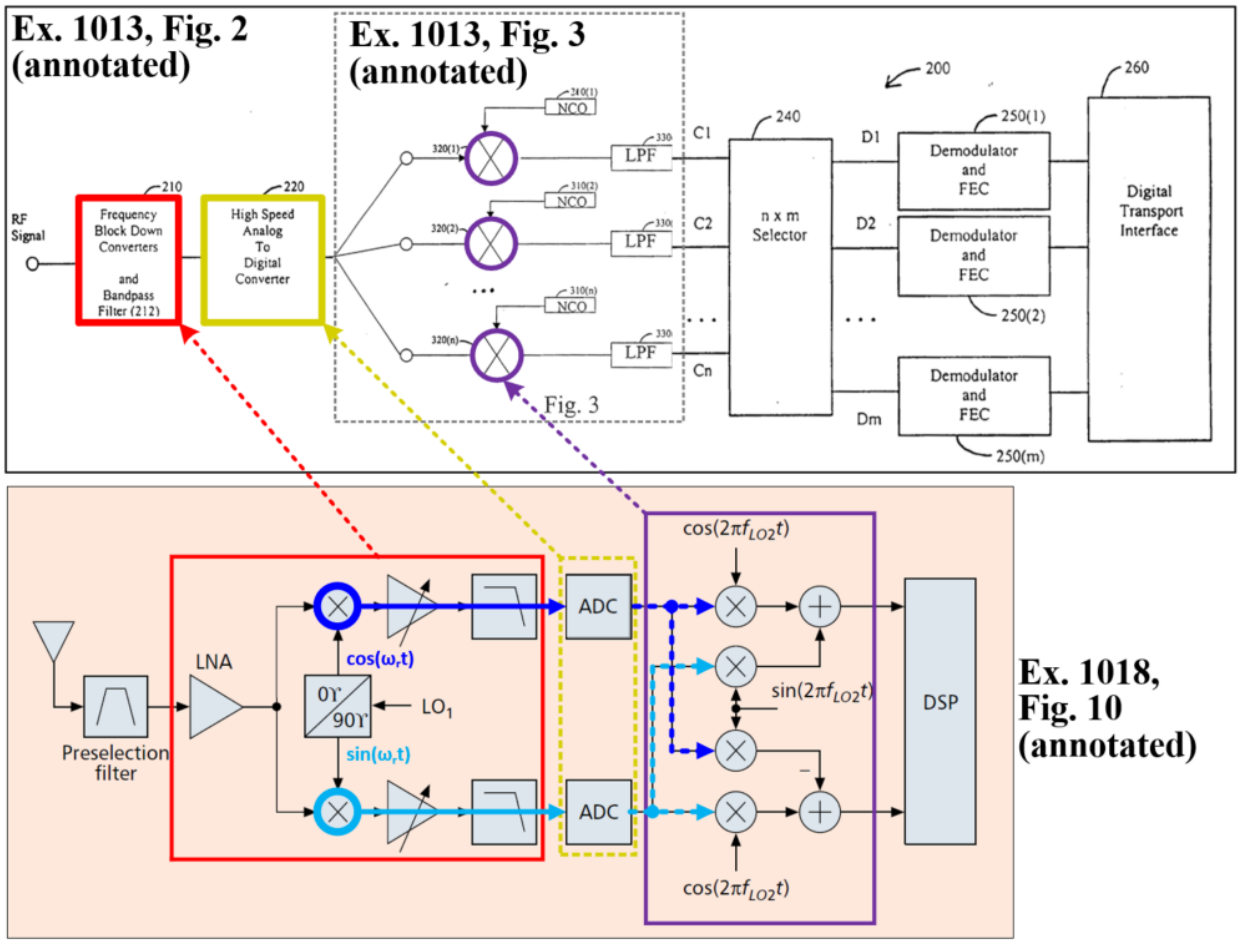

Ex. 1002, ¶260. This Zhang-Mirabbasi combination (which would have been obvious for the reasons given above (*see* §VII.D, *supra*)) has the same or equivalent structure as the structure given in the '275 patent for the "radio front end" and "digital frontend." *Id.*, ¶261.

Radio front end. In Zhang-Mirabbasi, Zhang's down-converter 210 implemented with Mirabbasi's radio front end circuitry (**red box** above and below-left) is the claimed "radio front end." *Id.*, ¶262. Mirabbasi's radio front end circuitry has the same (or equivalent) structure as the radio front ends 210, 410 of the '275 patent that are identified as potential corresponding structures (*see* §VI.E.1, *supra*).

Ex. 1002, ¶262. Specifically, Mirabbasi's **radio front end circuitry** includes a low-noise amplifier (LNA) and two paths where each path includes a mixer, amplifier, and filter, just as the '275 patent's **radio front end 210** includes LNA 202 and two paths where each path includes a mixer 211, 221, amplifier 213, 223, and filter 215, 225:

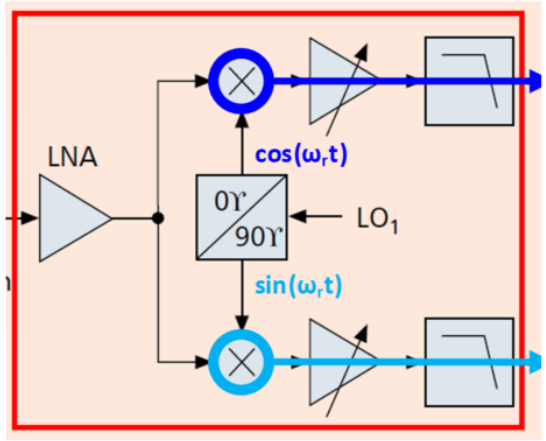

Ex. 1018, Fig. 10 (annotated)

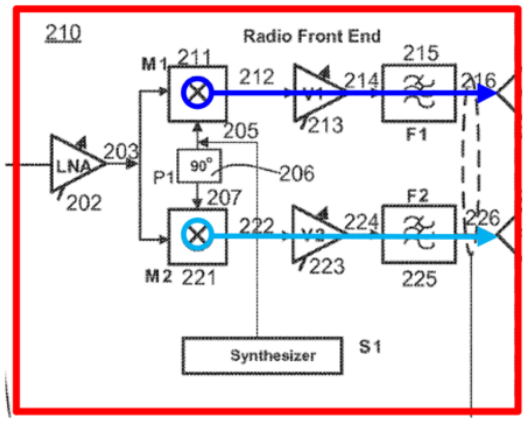

Ex. 1001, Fig. 2 (annotated)

Id.; *compare* Ex. 1018, 7-10, Figs. 7, 10 *with* Ex. 1001, 4:43-5:37, 7:31-46, Figs. 2, 4. In Zhang-Mirabbasi, Mirabbasi's **radio front end circuitry** processes Zhang's RF signal (claimed "input signal" (*see* §VII.A.1.c, *supra*)) and therefore performs the claimed function of "process[ing] the input signal." Ex. 1002, ¶263.

Further, Mirabbasi's **radio front end circuitry** and the '275 patent's radio front ends 210, 410 perform the same function of processing the input signal in the same way—down-converting an analog RF input signal by multiplying the input signal with a reference signal and then filtering—to achieve the same result of obtaining I and Q components of a downconverted analog RF signal. *Id.*, ¶264; Ex.

1018, 6-10; Ex. 1001, 2:64-3:1, 4:43-5:47.

Digital frontend (DFE). Mirabbasi's complex mixer has the identical structure and performs the identical downconversion (i.e., shifting the frequency of in-phase and quadrature components of the digital complex input signal) as mixer 300 in Figure 3 of the '275 patent. Ex. 1018, 9-10, Fig. 3; Ex. 1001, Fig. 3, 6:33-52, 9:49-54; *see also* Ex. 1025, 279-280; Ex. 1034, 63; Ex. 1002, ¶267. In Zhang-Mirabbasi, Zhang's demultiplexer 230 is modified such that each bank of **complex multipliers 320(1…n)** is implemented with Mirabbasi's **complex mixer**:

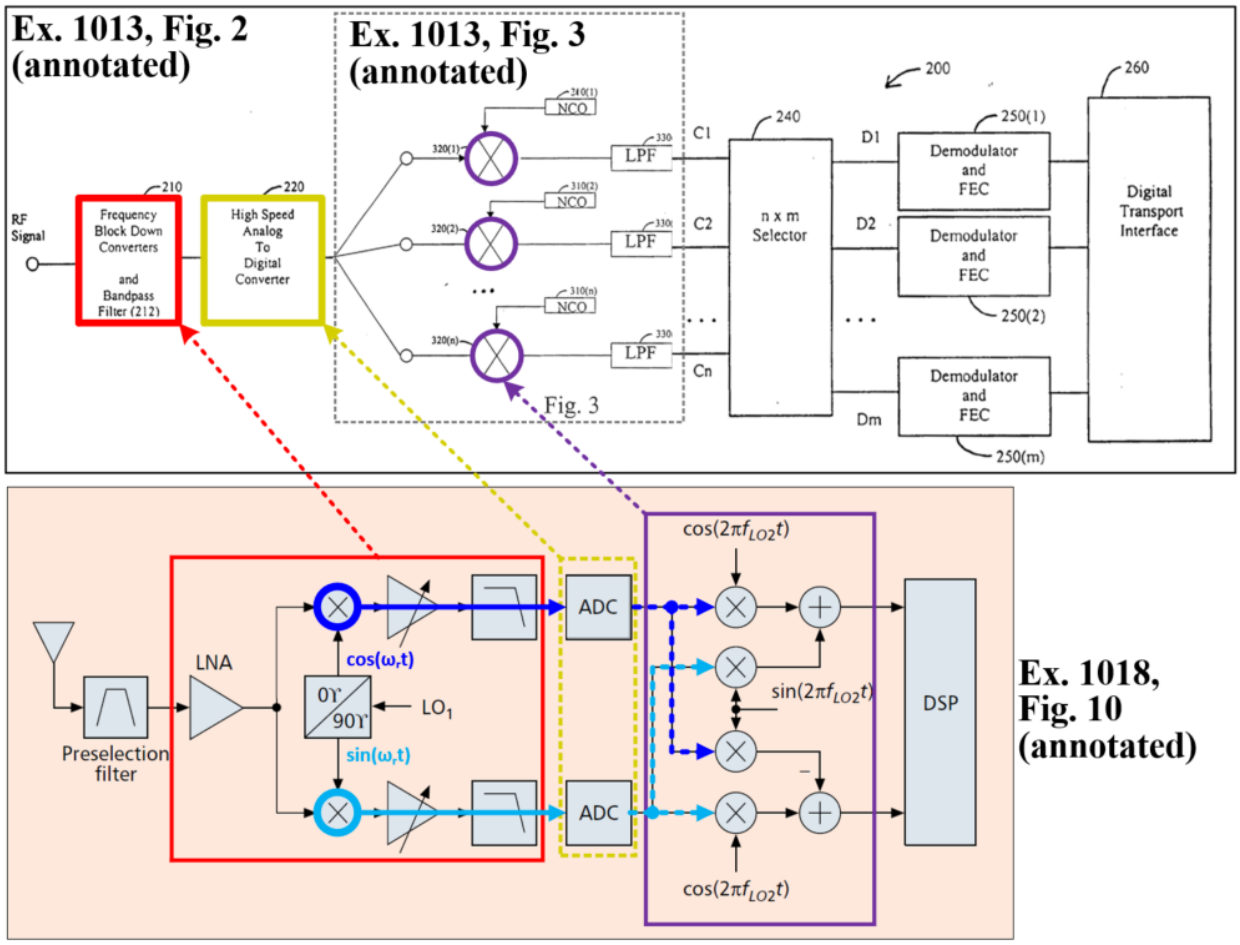

Ex. 1002, ¶265. The modified demultiplexer 230 (alone or with all or part of selector 240 (*see* §§VII.A.e-f, *supra*)) is the claimed "digital frontend (DFE)." Ex. 1002, ¶266.

Zhang-Mirabbasi's modified demultiplexer 230 has the same (or equivalent) structure as the digital front end 230 of the '275 patent that is identified as potential corresponding structure (*see* §VI.E.2, *supra*). *Id.* Specifically, Zhang-Mirabbasi's modified demultiplexer 230 includes a bank of **complex mixers 320** that each have four mixers/multipliers and two adders and a respective **low pass filter 330** at the output of each adder, just as the '275 patent's digital front end 230 includes a bank of **complex mixers 250** that each have four mixers/multipliers and two adders and a respective **low pass filter 260a-n** at the output of each adder:[7]

[7] Although the '275 patent's Figure 2 shows digital front end 230 further including decimators 270a-n, those are optional and thus not required for the claimed "digital frontend." Ex. 1001, 3:8-10, 6:17-19.

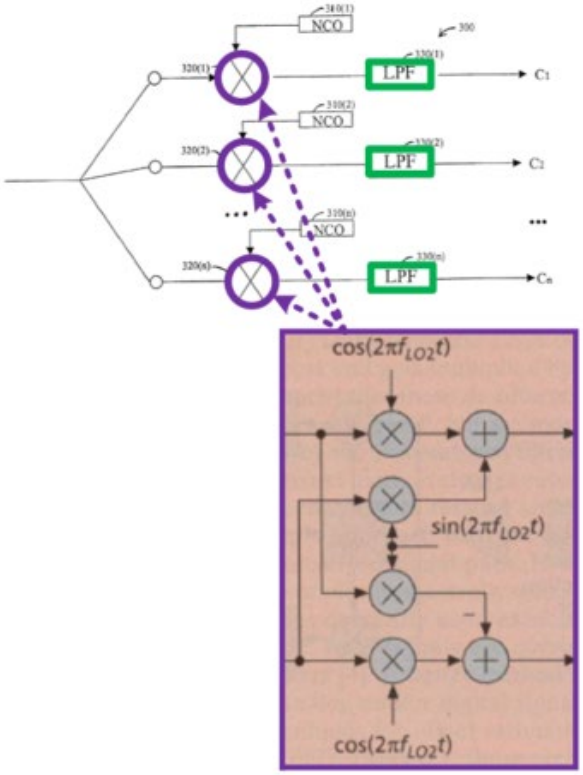

Ex. 1013, Fig. 3 (annotated) and Ex. 1018, Fig. 10 (annotated)

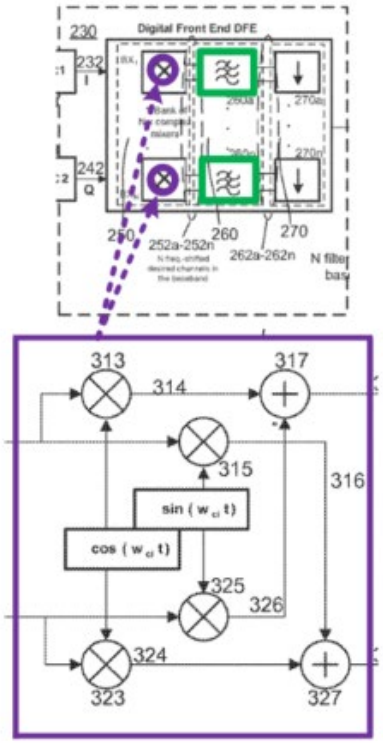

Ex. 1001, Figs. 2-3 (annotated)

Ex. 1002, ¶266; *compare* Ex. 1013, [0028], [0030]-[0032], Figs. 2-3 and Ex. 1018, 6, 9-10, Figs. 3, 9-10 *with* Ex. 1001, 3:3-10, 5:56-7:15, Figs. 2-3. Zhang-Mirabbasi's modified demultiplexer 230 would have retained Zhang's NCOs 310 for providing the sine and cosine signals used by its four mixers/multipliers, just as the '275 patent's mixer 300 uses NCOs to generate the sine and cosine signals used by its four mixers/multipliers. Ex. 1002, ¶267; *compare* Ex. 1013, [0032], Fig. 3 and Ex. 1018, 6, 9 *with* Ex. 1001, 6:54-59. Moreover, Zhang-Mirabbasi's modified demultiplexer 230 (alone or in combination with all or part of selector 240) performs the same claimed functions of "select[ing] the plurality of desired channels from the digitized signal and output[ting] the selected plurality of desired channels to at least

one demodulator as a digital datastream," ([11E]-[11F]), "output[ting] the digital datastream via a serial interface" (claim 12), and "output[ting] the digital datastream via a parallel interface" (claim 13), as explained above (*see* §§VII.A.1.e-f, §VII.A.2, *supra*). Ex. 1002, ¶267.

Further, Zhang-Mirabbasi's modified demultiplexer 230 (alone or in combination with all or part of selector 240) and the '275 patent's digital front end 230 perform the same function of selecting and outputting desired channels in the same way—by downconverting I and Q components of a desired channel to baseband and then low-pass filtering each component to isolate the desired channel—to achieve the same result of outputting a plurality of desired channels as a digital datastream. *Id.*, ¶268.

Finally, the modification of Zhang's downconverter 210, ADC 220, and demultiplexer 230 based on Mirabbasi does not change the basic operations of Zhang's demodulation circuit that were relied on for claims 11-13, 15, and 17-20. *Id.*, ¶269. Thus, aside from the reliance on Mirabbasi for the structure of the claimed "radio front end" and/or "digital frontend," Zhang-Mirabbasi teaches claims 11-15, and 17-20 for the same reasons that Zhang (for claims 11-13, 15, and 17-20) or Zhang-Mirabbasi (for claim 14) teaches them as explained above. *See* §VII.A, §VII.D, *supra*; Ex. 1002, ¶269.

3. Alternate Grounds: Claims 12-13 based on Zhang-Mirabbasi-Pandey (Ground G), Claim 12 based on Zhang-Mirabbasi-Zhang '933 (Ground H), and Claims 15-16 based on Zhang-Mirabbasi-Dong (Ground I)

The features of Zhang-Mirabbasi relied on for "radio front end" and/or "digital frontend," if those terms are given means-plus-function constructions (*see* §VII.F.2, *supra*)), are independent of the Zhang-Pandey features (e.g., parallel and serial interfaces) relied on for claims 12 and 13 in Ground C (*see* §VII.B, *supra*), Zhang-Zhang '933 features (e.g., serial interface) relied on for claim 12 in Ground D (*see* §VII.C, *supra*), and Zhang-Dong features (e.g., DVR and PNP) relied on for claims 15-16 in Ground F (*see* §VII.E, *supra*). Ex. 1002, ¶270. Thus, in the same manner with the same expectations of success and for the same reasons that Zhang alone would have been modified based on each of Pandey (*see* §VII.B, *supra*), Zhang '933 (*see* §VII.C, *supra*), and Dong (*see* §VII.E, *supra*), a POSITA would have modified Zhang-Mirabbasi (*see* §VII.D and §VII.F.2, *supra*) based on each of Pandey, Zhang '933, and Dong to arrive at Zhang-Mirabbasi-Pandey, Zhang-Mirabbasi-Zhang '933, and Zhang-Mirabbasi-Dong. Ex. 1002, ¶270.

Accordingly, Zhang-Mirabbasi-Pandey (Ground G) renders claims 12-13 obvious, Zhang-Mirabbasi-Zhang '933 (Ground H) renders claim 12 obvious, and Zhang-Mirabbasi-Dong (Ground I) renders claims 15-16 obvious for the reasons discussed above for each of these claims (*see* §VII.B, §VII.C, §VII.E, *supra*), even

if "radio front end" and/or "digital frontend" are given means-plus-function constructions. Ex. 1002, ¶271.

VIII. GROUNDS FOR STANDING & FEE PAYMENT

Petitioner hereby certifies that the '275 patent is available for, and Petitioner is not barred or estopped from requesting, *inter partes* review challenging claims 1-20.

Pursuant to 37 C.F.R. §42.103, the undersigned authorizes the charge of any required fees to Deposit Account No. 19-0733.

IX. CONCLUSION

Inter partes review should be instituted and claims 1-20 canceled.

Dated: December 6, 2024

By: /Frederic M. Meeker/

Frederic M. Meeker
Reg. No. 35,282
Banner & Witcoff, Ltd.
1100 13th Street, NW
Suite 1200
Washington, DC 20005
(202) 824-3000
fmeeker@bannerwitcoff.com

CERTIFICATION UNDER 37 CFR § 42.24(d)

Under the provisions of 37 CFR § 42.24(d), the undersigned hereby certifies that the word count for the foregoing Petition for Inter Partes Review totals 13,937, which is less than the 14,000 allowed under 37 CFR § 42.24(a)(1)(i). This total includes 13,892 words as counted by the Word Count feature of Microsoft Word and 45 words used in annotations.

Pursuant to 37 C.F.R. § 42.24(a)(1), this count does not include the table of contents, the table of authorities, mandatory notices under § 42.8, the certificate of service, this certification of word count, the claim listing appendix, or appendix of exhibits.

BANNER & WITCOFF, LTD

Dated: December 6, 2024

By: /Frederic M. Meeker/

Frederic M. Meeker
Reg. No. 35,282
Banner & Witcoff, Ltd.
1100 13th Street, NW
Suite 1200
Washington, DC 20005
(202) 824-3000
fmeeker@bannerwitcoff.com

CERTIFICATE OF SERVICE

Pursuant to 37 C.F.R. § 42.105, I hereby certify that I caused a true and correct copy of this Petition for *Inter Partes* Review in connection with U.S. Patent No. 11,785,275 and supporting evidence to be served via FedEx Priority Overnight on December 6, 2024, on the following:

23446 - MCANDREWS HELD & MALLOY, LTD
500 WEST MADISON STREET
SUITE 3400
CHICAGO, IL 60661
UNITED STATES

Dated: December 6, 2024

By: /Frederic M. Meeker/

Frederic M. Meeker
Reg. No. 35,282

CLAIM LISTING APPENDIX

U.S. Pat. No. 11,785,275

Designation	Claim Language
Claim 1	
[1A]	A method for operating a television receiver, comprising:
[1B]	receiving, by an input terminal, an input signal comprising broadcast channels, the broadcast channels comprising a plurality of desired channels and a plurality of undesired channels, wherein the plurality of desired channels are non-contiguous;
[1C]	processing, by a radio front end coupled to the input terminal, the input signal to generate a processed input signal;
[1D]	digitizing, by an analog-to-digital converter (ADC) coupled to the radio front end, the processed input signal to generate a digitized signal;
[1E]	selecting, by a digital frontend (DFE) coupled to the ADC, the plurality of desired channels from the digitized signal; and
[1F]	outputting, by the DFE, the selected plurality of desired channels to at least one demodulator as a digital datastream, wherein the demodulator extracts information encoded in the digital datastream.
Claim 2	
2	The method of claim 1, wherein the DFE outputs the digital datastream via a serial interface.
Claim 3	
3	The method of claim 1, wherein the DFE outputs the digital datastream via a parallel interface.
Claim 4	
4	The method of claim 1, wherein the ADC comprises: a first ADC configured to generate a digital in-phase signal; and a second ADC configured to generate a digital quadrature signal.
Claim 5	
5	The method of claim 1, wherein the extracted information is stored for use in a digital video recorder (DVR).

Designation	Claim Language
Claim 6	
6	The method of claim 1, wherein the extracted information is output for a picture-in-picture display.
Claim 7	
7	The method of claim 1, wherein the plurality of desired channels comprises at least one television channel.
Claim 8	
8	The method of claim 1, wherein the plurality of undesired channels comprises at least one television channel.
Claim 9	
9	The method of claim 1, wherein the broadcast channels comprise satellite broadcast channels.
Claim 10	
10	The method of claim 1, wherein the broadcast channels comprise cable broadcast channels.
Claim 11	
[11A]	A television receiver device, comprising:
[11B]	an input terminal operable to receive an input signal comprising broadcast channels, the broadcast channels comprising a plurality of desired channels and a plurality of undesired channels, wherein the plurality of desired channels are non-contiguous;
[11C]	a radio front end, coupled to the input terminal, operable to process the input signal;
[11D]	an analog-to-digital converter (ADC), coupled to the radio front end, operable to digitize the processed input signal to generate a digitized signal; and
[11E]	a digital frontend (DFE), coupled to the ADC, operable to select the plurality of desired channels from the digitized signal and
[11F]	output the selected plurality of desired channels to at least one demodulator as a digital datastream, wherein the demodulator is operable to extract information encoded in the digital datastream.
Claim 12	
12	The television receiver device of claim 11, wherein the DFE is operable to output the digital datastream via a serial interface.

Designation	Claim Language
Claim 13	
13	The television receiver device of claim 11, wherein the DFE is operable to output the digital datastream via a parallel interface.
Claim 14	
14	The television receiver device of claim 11, wherein the ADC comprises: a first ADC configured to generate a digital in-phase signal; and a second ADC configured to generate a digital quadrature signal.
Claim 15	
15	The television receiver device of claim 11, wherein the extracted information is stored for use in a digital video recorder (DVR).
Claim 16	
16	The television receiver device of claim 11, wherein the extracted information is output for a picture-in-picture display.
Claim 17	
17	The television receiver device of claim 11, wherein the plurality of desired channels comprises at least one television channel.
Claim 18	
18	The television receiver device of claim 11, wherein the plurality of undesired channels comprises at least one television channel.
Claim 19	
19	The television receiver device of claim 11, wherein the broadcast channels comprise satellite broadcast channels.
Claim 20	
20	The television receiver device of claim 11, wherein the broadcast channels comprise cable broadcast channels.