US 20070223512A1

(19) United States

(12) Patent Application Publication

(10) Pub. No.: US 2007/0223512 A1

(43) Pub. Date: Sep. 27, 2007

Cooper et al.

(54) **METHOD AND APPARATUS FOR CONFIGURING LOGICAL CHANNELS IN A NETWORK**

(75) Inventors: **Michael J. Cooper**, Marietta, GA (US); **John L. Moran III**, Uxbridge, MA (US)

Correspondence Address:
GENERAL INSTRUMENT CORPORATION DBA THE CONNECTED HOME SOLUTIONS BUSINESS OF MOTOROLA, INC.
101 TOURNAMENT DRIVE
HORSHAM, PA 19044 (US)

(73) Assignee: **General Instruments Corporation**, Horsham, PA

(21) Appl. No.: **11/690,217**

(22) Filed: **Mar. 23, 2007**

Related U.S. Application Data

(60) Provisional application No. 60/785,647, filed on Mar. 24, 2006.

Publication Classification

(51) **Int. Cl.**
H04J 3/16 (2006.01)
H04J 1/16 (2006.01)

(52) **U.S. Cl.** **370/437**; 370/252

(57) **ABSTRACT**

Logical channels in a network are automatically be configured by using measured network parameters. The measured network parameters are determined in cooperation with the network elements without interruption of active communication services. The network parameters include upstream or downstream modulation error ratio (MER), upstream or downstream signal to noise ratio (SNR), upstream or downstream microreflections, upstream transmit level, downstream receive power level, cable modem type (DOCSIS 1.0,1.1,2.0), functional capabilities (e.g., VoIP, 256QAM, etc), network element location with in a cable plant (e.g., node location or amplifier cascade depth), network element manufacturer, or type of services provided by the network element (including telephony versus data). An interactive display is provided to an operator which enables analysis of communication parameters, including modulation profiles and channel performance.

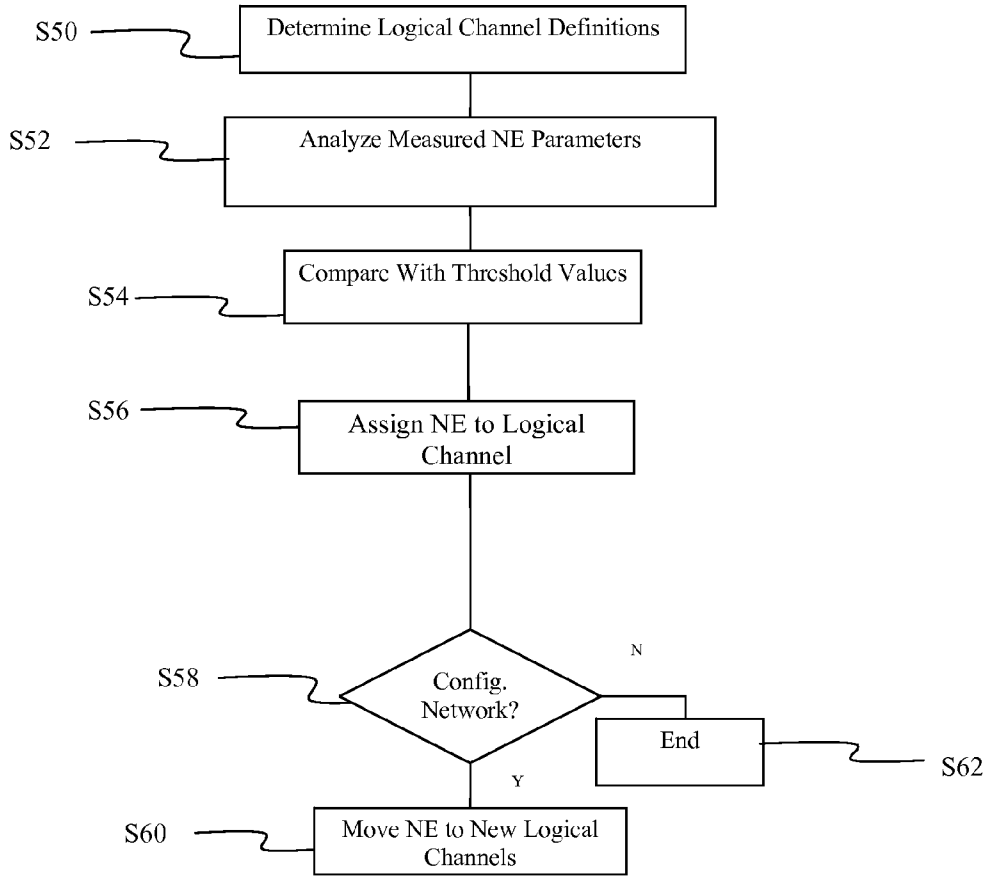

Comcast, Ex. 1005

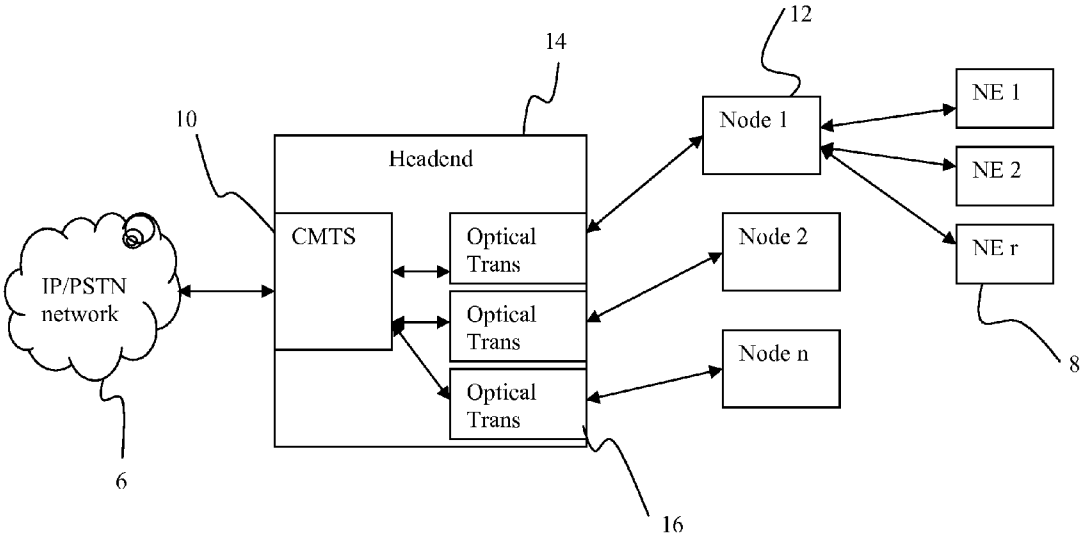

Figure 1

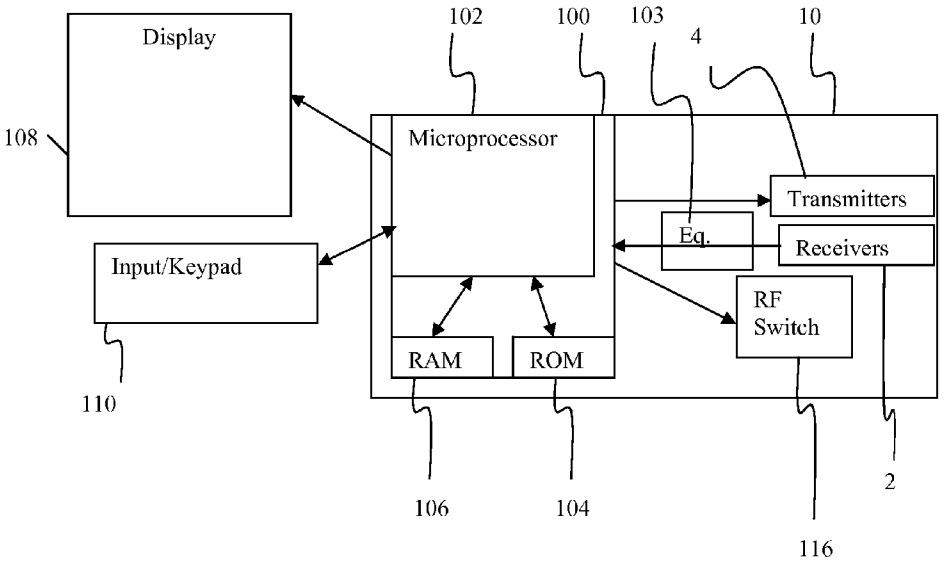

Figure 2

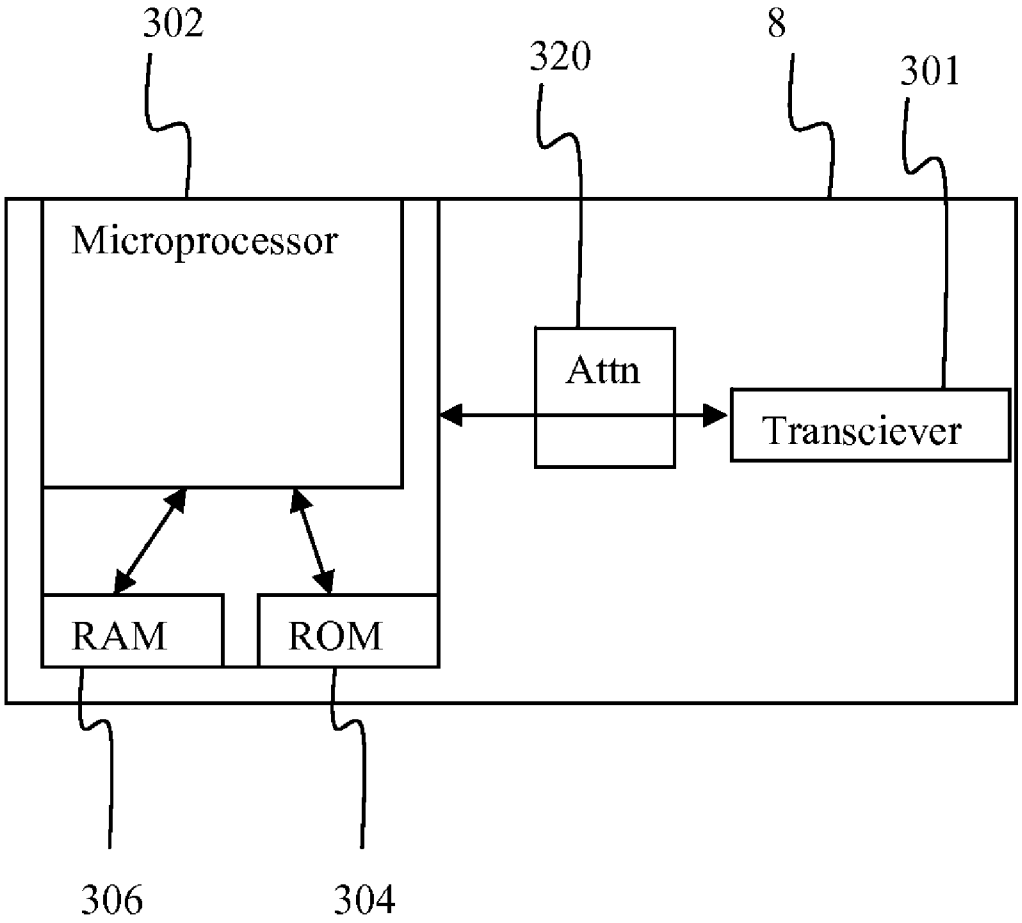
302
320
8
301
Microprocessor
Attn
Transciever
RAM
ROM
306
304

Figure 3

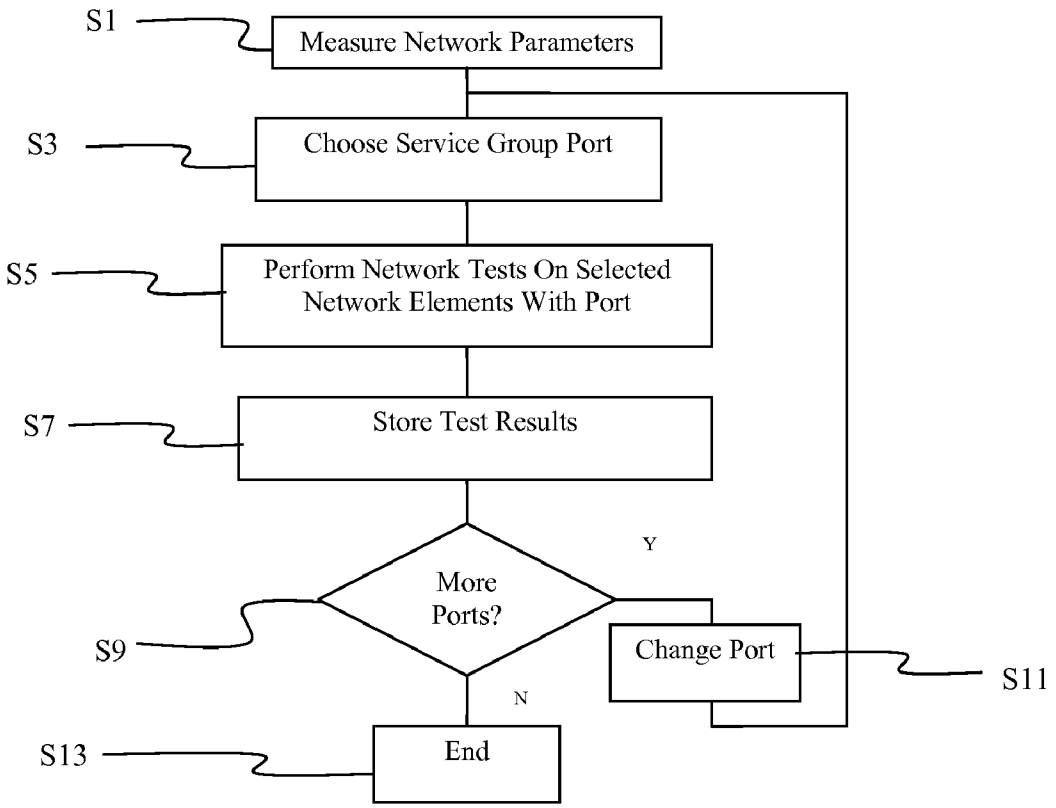
S1
Measure Network Parameters
S3
Choose Service Group Port
S5
Perform Network Tests On Selected Network Elements With Port
S7
Store Test Results
S9
More Ports?
Y
N
Change Port
S11
S13
End

Figure 4

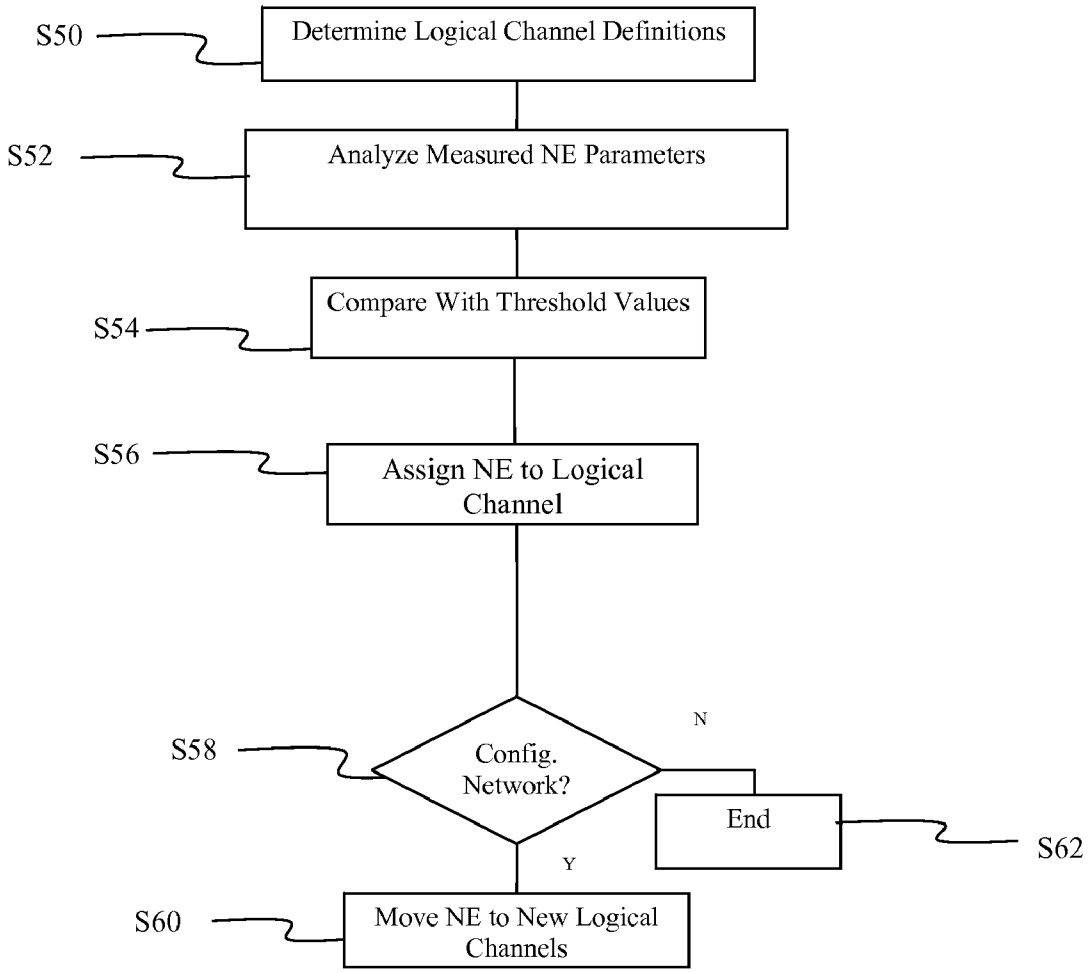
S50
Determine Logical Channel Definitions
S52
Analyze Measured NE Parameters
S54
Compare With Threshold Values
S56
Assign NE to Logical Channel
S58
Config. Network?
N
End
S62
Y
S60
Move NE to New Logical Channels

Figure 5

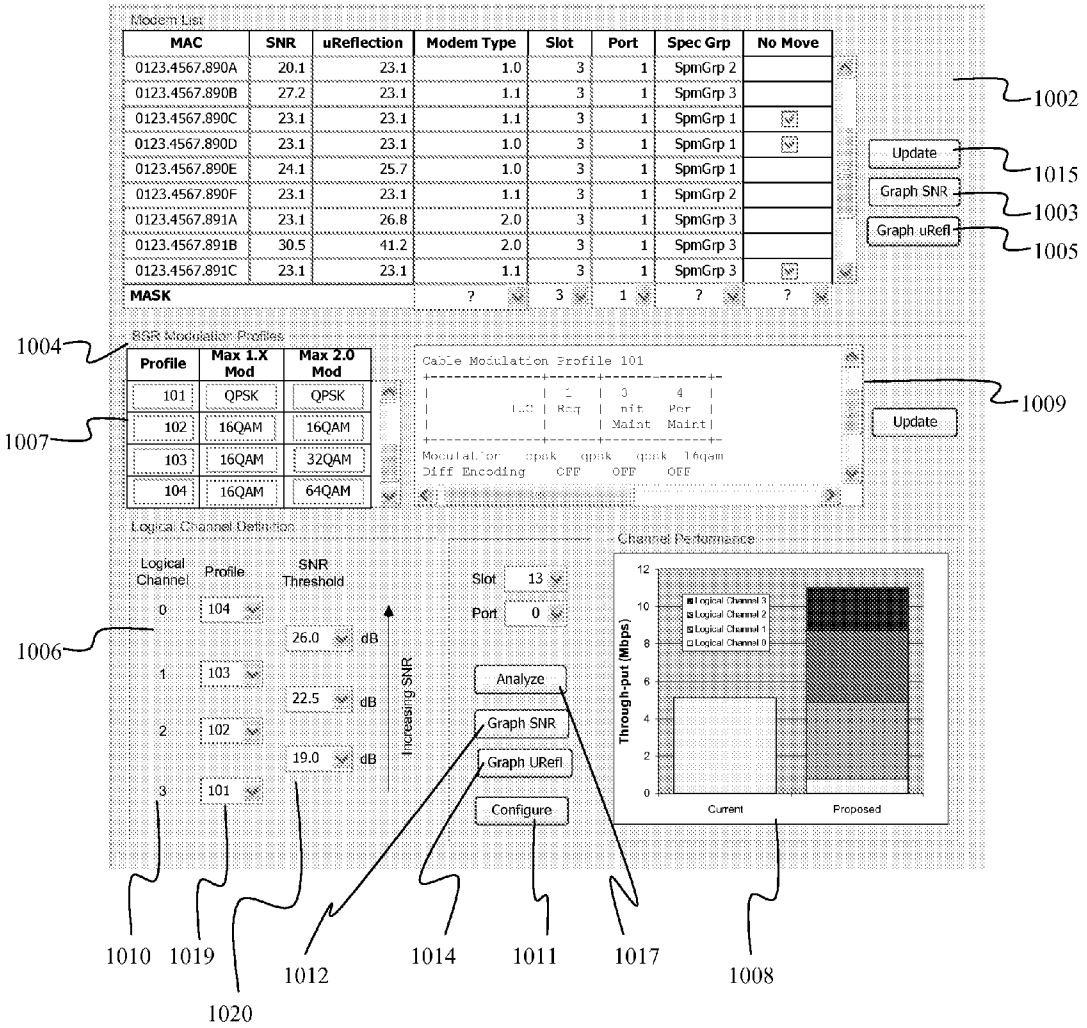
Modem List
MAC
SNR
uReflection
Modem Type
Slot
Port
Spec Grp
No Move
0123.4567.890A 20.1 23.1 1.0 3 1 SpmGrp 2
0123.4567.890B 27.2 23.1 1.1 3 1 SpmGrp 3
0123.4567.890C 23.1 23.1 1.1 3 1 SpmGrp 1
0123.4567.890D 23.1 23.1 1.0 3 1 SpmGrp 1
0123.4567.890E 24.1 25.7 1.0 3 1 SpmGrp 1
0123.4567.890F 23.1 23.1 1.1 3 1 SpmGrp 2
0123.4567.891A 23.1 26.8 2.0 3 1 SpmGrp 3
0123.4567.891B 30.5 41.2 2.0 3 1 SpmGrp 3
0123.4567.891C 23.1 23.1 1.1 3 1 SpmGrp 3
MASK ? 3 1 ? ?
Update
Graph SNR
Graph uRefl
1002
1015
1003
1005
1004
SGR Modulation Profiles
Profile
Max 1.X Mod
Max 2.0 Mod
101 QPSK QPSK
102 16QAM 16QAM
103 16QAM 32QAM
104 16QAM 64QAM
1007
Cable Modulation Profile 101
Update
1009
Logical Channel Definition
Logical Channel
Profile
SNR Threshold
0 104 26.0 dB
1 103 22.5 dB
2 102 19.0 dB
3 101
Increasing SNR
1006
Slot 13
Port 0
Analyze
Graph SNR
Graph URefl
Configure
Channel Performance
Through-put (Mbps)
Current
Proposed
1010
1019
1020
1012
1014
1011
1017
1008

Fig. 6

METHOD AND APPARATUS FOR CONFIGURING LOGICAL CHANNELS IN A NETWORK

[0001] This application claims the benefit of U.S. Provisional Application 60/785,647 filed on Mar. 24, 2006, herein incorporated by reference in its entirety.

FIELD OF THE INVENTION

[0002] This disclosure is directed toward configuring logical channels in a network. More particularly, this disclosure is directed toward grouping network elements according to certain parameters to configure logical channels in a network.

BACKGROUND OF THE INVENTION

[0003] Coaxial cable television systems have been in widespread use for many years and extensive networks have been developed. The extensive and complex networks are often difficult for a cable operator to manage and monitor. A typical cable network generally contains a headend which includes a cable modem termination system (CMTS). The CMTS contains several receivers, each receiver connects to one or more nodes which are connected to network elements (cable modems, MTAs, etc) of many subscribers, e.g., a single receiver may be connected to hundreds of modems which vary widely in communication characteristics. In many instances several nodes may serve a particular area of a town or city. The CMTS is also usually connected to an IP network from which it obtains content from various sources including the internet, and voice networks. The network elements communicate to the CMTS via upstream communications on a dedicated band of frequency and receive information from the CMTS via downstream communications.

[0004] Cable networks are also increasingly carrying signals which require a high quality and reliability of service, such as voice communications or Voice over IP (VoIP) communications. Any disruption of voice or data traffic is a great inconvenience and often unacceptable to a subscriber.

[0005] Logical channel operation is a mechanism whereby multiple upstream channels may be configured with different operating parameters while all operating on the same physical channel. DOCSIS 2.0 introduced this concept to support simultaneous operation and therefore backwards compatibility of TDMA, ATDMA, and SCDMA cable modems.

[0006] Existing technologies within CMTSs or network management applications do not currently provide a mechanism to differentiate modems and reassigned them to leverage any grouping benefits. If such a technology did exist, it will be limited to physical channel (not logical channel) isolation and therefore would not offer much in the way of benefits as the number of physical channels is a very limited commodity. It is only with the recent creation of logical channels in the DOCSIS 2.0 specification that such benefits have manifested themselves. Current CMTS implementations for configuring logical channels are manual processes where a unique command must generally be entered for each cable modem registered on the system. With a CMTS typically servicing over 20,000 cable modems, clearly no operators are utilizing any such feature. Further, there is no current product offering that provides the operator a mechanism for grouping these modems.

SUMMARY OF THE INVENTION

[0007] This disclosure explains an automated process to determine logical channels using network elements (such as MTAs or cable modems) in conjunction with measurements made at the headend, via a CMTS device, and does not require rolling trucks to remote locations within a plant.

[0008] In accordance with principles of the invention, an apparatus of the invention may comprise: a microprocessor configured to determine network parameters associated with a selected network element based on communications with the selected network element; and a receiver configured to receive signals indicative of the network parameters from a network element, wherein the microprocessor is configured to assign the network element to a logical channel based on the network parameters. The network parameters may include one of: upstream or downstream modulation error ratio (MER), upstream or downstream signal to noise ratio (SNR), upstream or downstream microreflections, upstream transmit level, downstream receive power level, cable modem type (DOCSIS 1.0,1.1,2.0), functional capabilities (e.g., VoIP, 256QAM, etc), network element location with in a cable plant, network element manufacturer, or type of services provided by the network element (including telephony versus data). The microprocessor compares the network parameters with threshold values and assigns the network elements to a logical channel based on the comparison.

[0009] In accordance with the invention, a method for configuring logical channels in a network may comprise the steps of: determining network parameters associated with a selected network element based on communications with the selected network element; analyzing the network parameters; and assigning network elements to logical channels based on the network parameters. The step of providing instructions to the network elements to realign includes receiving instructions from an operator to realign the network elements. The step of assigning network elements to a logical channel may include an operator providing selected network elements to be assigned or unassigned to or from a logical channel.

[0010] In accordance with the principles of the invention, a computer readable medium may carrying instructions for a computer to perform a method for configuring logical channels in a network comprising the steps of: determining network parameters associated with a selected network element based on communications with the selected network element; analyzing the network parameters; and assigning network elements to logical channels based on the network parameters.

[0011] The invention enables a network operator to optimize the performance of the network by assigning network elements to logical channels cheaply and quickly at a central location, such as the headened such as by using the Motorola BSR64000, thus increasing the overall through-put achievable on the network and therefore the number of devices which may be serviced within a single upstream channel, without necessitating the upgrading of a cable plant of the upgrading of cable modem or MTA devices. The invention also enables the optimal configuration to be determined and implemented without impacting active services. All measurements may be made through the use of the existing terminal network element devices (specifically, DOCSIS

terminal devices such as MTAs and cable modems) as well as headend equipment (specifically a DOCSIS CMTS).

BRIEF DESCRIPTION OF THE DRAWINGS

[0012] The following drawings serve to illustrate the principles of the invention.

[0013] FIG. **1** illustrates an exemplary network in accordance with the principles of the invention.

[0014] FIG. **2** illustrates a logical architecture of an exemplary CMTS **10** to facilitate an understanding of the invention.

[0015] FIG. **3** illustrates an exemplary network element **8**, such as a cable modem.

[0016] FIG. **4** illustrates an exemplary process for measuring network parameters in accordance with the principles of the present invention.

[0017] FIG. **5** illustrates an exemplary process for reconfiguring logical channels in accordance with the principles of the present invention.

[0018] FIG. **6** illustrates an exemplary panel display from a computer operation associated with the invention.

DETAILED DESCRIPTION OF THE INVENTION

[0019] This disclosure provides for a CMTS supporting application (PC Application) and a process which allows the network operator to easily group network elements (e.g. cable modems, media terminal adaptor (MTA) and other customer premise equipment) based upon common parametrics and performance similarities. These groupings may then be used to configure logical channels and subsequently the assignment of the network elements to these logical channels. Such grouping by logical channels provides the operator with many advantages including: the ability to take advantage of unique features common to only a subset of the network elements, increase overall network through-put by optimizing physical layer configuration parameters to network elements grouping, isolation of problematic network elements supporting proactive network maintenance activities, and differentiation by QOS which allows the operator to offer additional premium services.

[0020] This disclosure documents an apparatus and methodology for a PC application that connects to a DOCSIS CMTS and extracts the necessary information to allow the network operator to visualize various parametric relationships for all the registered network elements. The network operator may differentiate groups of these network elements based upon thresholds for these parameters, configure the CMTS with the appropriate logical channels matching these groups, and finally, automatically move each of the modems to the appropriate logical channel.

[0021] This disclosure provides for isolating network elements based upon many different parameters (upstream or downstream modulation error ratio (MER), upstream or downstream signal to noise ratio (SNR), upstream or downstream microreflections, upstream transmit level, downstream receive power level, cable modem type (DOCSIS 1.0,1.1,2.0), functional capabilities (e.g., VoIP, 256QAM, etc), network element location with in a cable plant, network element manufacturer, or type of services provided by the network element (including telephony versus data, etc.). The network operator is given the flexibility to exploit these differences to optimize management of the network including configuring logical channels. For example, the operator can differentiate cable modems by upstream Modulation Error Ratio (MER) which is a primary determinant in the modulation rate (QPSK, 16QAM, 32QAM, 64QAM, etc) that may be run, and then set up multiple logical channels, each one with a different modulation rate, and then assign the appropriate network elements to each logical channel based upon which modulation could be supported.

[0022] FIG. **1** illustrates an exemplary network in which a plurality of terminal network elements **8** (e.g. cable modems, set top boxes, televisions equipped with set top boxes, or any other element on a network such as an HFC network) are connected to a cable modem termination system (CMTS) **10** located in a headend **14** through nodes **12** and one or more taps (not shown). In an exemplary arrangement, headend **14** also contains an optical transceiver **16** which provides optical communications through an optical fiber to the plurality of nodes **12**. The CMTS **10** connects to an IP or PSTN network **6**. Those of skill in the art will appreciate that there may be a plurality of nodes **12** connected to a headend, and a headend may contain a plurality of CMTS **10** units, each of which contain a plurality of receivers (e.g. 8 receivers) each of which communicate with a plurality (e.g. 100 s) of network elements **8**. The CMTS **10** may also contain a spare receiver which is not continuously configured to network elements **8**, but may be selectively configured to network elements **8**. Use of a spare receiver is described in commonly assigned Attorney Docket No. BCS03827, assigned U.S. Ser. No. 11/171,066, filed on Jun. 30, 2005 and titled AUTOMATED MONITORING OF A NETWORK, herein incorporated by reference in its entirety.

[0023] FIG. **2** illustrates a logical architecture of an exemplary CMTS **10** to facilitate an understanding of the invention. As illustrated in FIG. **2**, CMTS **10** may contain a processing unit **100** which may access a RAM **106** and a ROM **104**, and may control the operation of the CMTS **10** and RF communication signals to be sent/received to/from the network elements **8**. Processing unit **100** preferably contains a microprocessor **102** which may receive information, such as instructions and data, from a ROM **104** or RAM **106**. Processing unit **100** is preferably connected to a display **108**, such as a CRT or LCD display, which may display status information such as whether a station maintenance (SM) is being performed or a receiver is in need of load balancing. An input keypad **110** may also be connected to processing unit **100** and may allow an operator to provide instructions, processing requests and/or data to processor **100**.

[0024] RF transceiver (transmitter/receiver) unit preferably contains a plurality of transmitters **4** and receivers **2** to provide bi-directional communication with a plurality of network elements **8** through optical transceivers **16**, nodes **12** and a plurality of network taps (not shown). Those of skill in the art will appreciate that CMTS **10** may contain a plurality of RF receivers **2**, e.g. 8 RF receivers and a spare RF receiver. Each RF receiver **2** may support over 100 network elements. The RF receiver **2**, such as a Broadcom 3140 receiver (receiver), preferably provides the received RF signals to an equalizer **103** which is used to acquire

equalizer values and burst modulation error ratio (MER) measurements, packet error rate (PER) and bit error rate (BER). Equalizer **103** is preferably a multiple tap linear equalizer (e.g. a 24 tap linear equalizer), which also may be known as a feed forward equalizer (FFE). Equalizer **103** may be integrally contained in RF receiver **2** or may be a separate device. The communication characteristics of each receiver **2** may be stored on ROM **104** or RAM **106**, or may be provided from an external source, such as headend **14**. RAM **104** and/or ROM **106** may also carry instructions for microprocessor **102**.

[**0025**] FIG. **3** illustrates an exemplary network element **8**, such as a cable modem. Network element **8** preferably contains a processor **302** which may communicate with a RAM **306** and ROM **304**, and which controls the general operation of the network element, including the pre-equalization parameters and preamble lengths of communications sent by the network element in accordance with instructions from the CMTS **10**. Network element **8** also contains a transceiver (which includes a transmitter and receiver) which provides bidirectional RF communication with CMTS **10**. Network element **8** may also contain an equalizer unit which may equalize the communications to CMTS **10**. Network element **8** may also contain an attenuator **320** which may be controlled by microprocessor to attenuate signals to be transmitted to be within a desired power level. Those of skill in the art will appreciate that the components of network element **8** have been illustrated separately only for discussion purposes and that various components may be combined in practice.

[**0026**] An exemplary process for automatically measuring network element parameters in a service group, which may be associated with a node, is illustrated in FIG. **4**. As illustrated in step S**1** of FIG. **4**, the measurement process is initiated and service group port is chosen, step S**3**.

[**0027**] As illustrated in FIG. **4**, step S**3**, a service group port, e.g. a receiver on the headend, is chosen for testing. The network elements associated with the selected service group port are tested, step S**5**. The tests performed may include: upstream or downstream modulation error ratio (MER), upstream or downstream signal to noise ratio (SNR), upstream or downstream microreflections, upstream transmit level, downstream receive power level, cable modem type (DOCSIS 1.0,1.1,2.0), functional capabilities (e.g., VoIP, 256QAM, etc), network element location with in a cable plant, network element manufacturer, or type of services provided by the network element (including telephony versus data, etc.

[**0028**] While any suitable technique for determining the location of a network element in the cable network may be used, a methodology for isolating devices which reside on the same optical node or serving group is provided in a commonly assigned disclosure Attorney Docket No. BCS04122, entitled METHOD AND APPARATUS FOR GROUPING TERMINAL NETWORK DEVICES filed on Sep. 5, 2006 and assigned U.S. Ser. No. 11/470,034, herein incorporated by reference in its entirety. Further, while any suitable technique for identifying microreflections associated with network elements may be used, a methodology for determining microreflections is provided in commonly assigned disclosure Attorney Docket No. BCS04125, entitled METHOD AND APPARATUS FOR DETERMINING MICROREFLECTIONS IN A NETWORK, filed on Dec. 7, 2006 and assigned U.S. Ser. No. 11/608,028, herein incorporated by reference in its entirety.

[**0029**] The test results associated with each tested network element on the selected port are preferably stored, step S**7**. The process determines if more ports are available for testing, and if so, step S**9**, Yes, changes to another port, step S**11**, and performs testing on network elements associated with the new port. If no more ports are available for testing, step S**9**, No, then the process ends, step S**13**.

[**0030**] FIG. **5** illustrates an exemplary process for reassigning network elements to logical channels in the network. As illustrated in step S**50**, the process begins by determining the logical channel definitions. This process may be implemented as an automated process whereby the processor determines which parameter to optimize and selects the optimal grouping of modems to be assigned to each of multiple logical channels. From this optimization process, the processor is able to determine the optimal value for thresholds to isolate the various logical channels and the associated channel profile configuration (parameters) for each logical channel. Alternately, the operator may be allowed to select which parameter to optimize and the desired threshold to isolate each logical channel. The measured network element parameters from the process illustrated in FIG. **4** are analyzed in step S**52**. The measured network parameters may be compared to one or more threshold values for each of the measurement parameters, as illustrated in step S**54**. The threshold values may be predetermined values or may be dynamically determined based on mathematical techniques such as a mean value of a measured network parameter, or a range of values set by an operator. The network parameters may be sorted in table and displayed in graphical formats, including bar graphs. Various techniques for analyzing the measured network parameters are displayed in an exemplary panel display from a computer operation illustrated in FIG. **6**.

[**0031**] As illustrated in FIG. **5**, step S**56**, the network elements are assigned to logical channels based on the comparison of their individual test parameter value with the threshold values in step S**54**. The process then determines if the operator desires to reconfigure the network to reassign the network elements to the newly determined logical channels, step S**58**. If the network operator instructs to reconfigure the network, step S**58** Yes, then the network elements are moved to the logical channels to which they are designated, step S**60**. If the network operator does not desire to reassign the network elements to the logical channels, step S**58** No, then the process ends. The process preferably uses the UCC or DCC commands as necessary to move the modems to their corresponding logical channels.

[**0032**] FIG. **6** illustrates an example of a channel configuration screen shot which may be used by an operator to configure logical channels. As illustrated in FIG. **6** a three panel window may be used to display 1) a sorting of network element by various parameters **1002**, 2) profile/channel parameter definitions **1004**, and 3) logical channel definition/performance display **1006**.

[**0033**] The channel configuration window preferably includes a network element list panel **1002** which displays a list of network elements on the CMTS. The operator preferably is able to sort, filter and graph the various network

element parameters. While the network element parameters illustrated include the MAC address, the measured SNR and microreflections, the network element or modem type, the CMTS slot, the CMTS port, the spectrum group of the network element, and a "no move" flag, those of skill in the art will appreciate that other network element parameters may be displayed as well. By supporting sorting, filtering, and graphing, the operator is able to quickly visualize the distribution of network elements by various network element parameters and to understand the distribution of modems against various parameter thresholds. For example, the operator may quickly decipher what proportion of the modems (e.g., 75%) possess a network element parameter greater than THRESHOLD1 and less than THRESHOLD2. This understanding is useful in allowing the operator to identify which parameters should be utilized as a basis for grouping network elements into various logical channels and as a basis to select necessary thresholds. The thresholds and the number of thresholds used may also be automatically assigned to best fit the network elements into logical channels based on a network parameter, such as evenly segmenting the network elements based on SNR or microreflection.

[**0034**] The Logical Channel performance display **1002** may also contain various radio buttons to allow an operator to provide several graphical displays, such as Update button **1015**, Graph SNR button **1003**, and Graph uRefl button **1005**. The Update button **1015** may extract information from the CMTS which may include the measured network element parameters. The Graph SNR button **1015** may provide a display, such as a bar chart display, of the SNR associated with network elements on the CMTS or just a designated slot or port on the CMTS. The Graph uRefl button **1005** may provide a display, such as a bar chart display, of the microreflections associated with network elements on the CMTS or just a designated slot or port. Those of skill in the art will appreciate that other radio buttons may be provided which enable display of any of the parameters associated with network elements on the CMTS or on a designated slot or port.

[**0035**] Various graphics displays may be provided, such as a display of upstream or downstream modulation error ratio (MER), upstream or downstream signal to noise ratio (SNR), upstream or downstream microreflections, upstream transmit level, downstream receive power level, cable modem type (DOCSIS 1.0,1.1,2.0), functional capabilities (e.g., VoIP, 256QAM, etc), network element location with in a cable plant, network element manufacturer, or type of services provided by the network element (including telephony versus data, etc.).

[**0036**] The Modulation Profile display panel **1004** provides the ability for the operator to configure various profile configuration templates which may later be assigned to an individual logical channel. That is, the operator may view, create and edit modulation profiles **1007** which optimize the specific needs of a subset of the network elements. Additional details of a modulation profile may be displayed as well in an expanded detail window **1009**.

[**0037**] The Logical Channel Definition display panel **1006** provides the ability to define each logical channel **1010** for a given CMTS slot/port and select the modulations profiles **1019** viewed in the channel profile/parameter definition panel and associated with various performance parameters and thresholds **1020**. Performance parameters **1020** could include: 1) upstream or downstream modulation error ratio (MER), 2) upstream or downstream signal to noise ratio (SNR), 3) upstream or downstream microreflections, 4) upstream transmit level, 5) downstream receive power level, 6) cable modem type (DOCSIS 1.0,1.1,2.0), 7) functional capabilities (e.g., VoIP, 256QAM, etc), 8) network element location with in a cable plant (e.g., node location or amplifier cascade depth), 9) network element manufacturer, 10) type of services provided by the network element (including telephony versus data, and others). A threshold (appropriate to the network element parameter selected) is preferably specified for each logical channel to allow the application to isolate (or group) the various network elements into logical channels based upon the threshold.

[**0038**] Logical Channel performance display **1008** may contain a bar chart **1008** (e.g. within the logical channel definition panel) which compares the theoretical performance of the channel as currently configured with the performance achieved if the logical channel configuration were implemented. This bar chart may be a color coded stacked bar which allows the operator to visualize the contributions to resulting from each of the logical channels. The Logical Channel performance display **1008** may also contain various radio buttons to an allow an operator to provide several graphical displays, such as Analyze button **1017**, Graph SNR button **1012**, Graph URefl button **1014**, and Configure button **1011**. The Graph SNR button **1012** may provide a display, such as a bar chart display, of the SNR associated with network elements on a designated slot or port. The Graph URefl button **1014** may provide a display, such as a bar chart display, of the microreflections associated with network elements on a designated slot or port. Those of skill in the art will appreciate that other radio buttons may be provided which enable display of any of the parameters associated with network elements on a designated slot or port.

[**0039**] The system preferably allows an operator to automatically configure the CMTS to fit the logical channel definition defined with the thresholds. This process will preferably reconfigure the settings for a receiver **2**, or the selected slot and port of receiver **2** to match the logical channels defined. When the operator initiates the configuration process, the system preferably configures each of the logical channel profiles and moves each network element to the appropriate logical channel as dictated by the selected parameter and threshold settings. The primary goal of logical channel assignment is to optimize system performance as measured by each network element. System performance may include many things including: maximum through-put, maximum number of network elements supported, quality of service (QOS) performance, ease of manageability from the service provider perspective, and others. As such, the system may automatically determine the optimum value for the threshold settings or it may allow an operator to analyze his network and manually select the desired threshold settings.

[**0040**] In the described embodiment here the operator may trigger the logical channel configuration process. However, an alternate approach is to integrate an algorithm within the CMTS and to allow it to automatically rerun the logical channel optimization process at regular intervals (e.g. two times per day, once per day/week/month or year, etc.) in order to provide an optimal system performance while

simultaneously dealing with any variations that might be encountered for some parameters over time. For example, MER and SNR parameters will vary over time because of such conditions as climate, temperature, and network degradation and maintenance.

[0041] The system preferably has the agility to manually override logical channel assignment for various modems which are configured with the automatic threshold process described above. The system preferably provides a mechanism for the operator to view the lists of modems categorized by logical channel and manually reassign them as desired prior to analyzing or configuring the channel, such as by using drag-and-drop function to minimize the efforts of the operator when undertaking any manual overrides.

[0042] The processes in FIGS. **5-6** may be implemented in hard wired devices, firmware or software running in a processor. A processing unit for a software or firmware implementation is preferably contained in the CMTS. Any of the processes illustrated in FIGS. **5-7** may be contained on a computer readable medium which may be read by microprocessor **102**. A computer readable medium may be any medium capable of carrying instructions to be performed by a microprocessor, including a CD disc, DVD disc, magnetic or optical disc, tape, silicon based removable or non-removable memory, packetized or non-packetized wireline or wireless transmission signals.

[0043] The invention enables a network operator to optimize the performance of the network by assigning network elements to logical channels cheaply and quickly at a central location, such as the headened such as by using the Motorola BSR64000. The network operator may manually assign the network elements to logical channels or may use an automated process.

What is claimed is:

1. An apparatus for configuring logical channels in a network comprising:

a microprocessor configured to determine network parameters associated with a selected network element based on communications with the selected network element; and

a receiver configured to receive signals indicative of the network parameters from a network element; and

wherein the microprocessor is configured to assign the network element to a logical channel based on the network parameters.

2. The apparatus of claim 1, wherein the network parameters include one of: upstream or downstream modulation error ratio (MER), upstream or downstream signal to noise ratio (SNR), upstream or downstream microreflections, upstream transmit level, downstream receive power level, cable modem type, functional capabilities, network element location with in a cable plant, network element manufacturer, or type of services provided by the network element.

3. The apparatus of claim 1, wherein the microprocessor compares the network parameters with threshold values and assigns the network elements to a logical channel based on the comparison.

4. The apparatus of claim 1, wherein the microprocessor provides instructions to the network elements to realign the network elements according to the logical channels.

5. The apparatus of claim 1, further including an operator interface arranged to provide the network parameters to an operator,

6. A method for configuring logical channels in a network comprising the steps of:

determining network parameters associated with a selected network element based on communications with the selected network element;

analyzing the network parameters; and

assigning network elements to logical channels based on the network parameters.

7. The method of claim 6, wherein the network parameters include one of: upstream or downstream modulation error ratio (MER), upstream or downstream signal to noise ratio (SNR), upstream or downstream microreflections, upstream transmit level, downstream receive power level, cable modem type, functional capabilities, network element location with in a cable plant, network element manufacturer, or type of services provided by the network element.

8. The method of claim 6, wherein the step of assigning network elements to logical channels includes comparing the network parameters with threshold values and assigning the network elements to a logical channel based on the comparison.

9. The method of claim 6, further including the step of providing instructions to the network elements to realign the network elements according to the logical channels.

10. The method of claim 9, wherein the step of providing instructions to the network elements to realign includes receiving instructions from an operator to realign the network elements.

11. The method of claim 6, wherein the step of assigning network elements to a logical channel includes an operator providing selected network elements to be assigned or unassigned to or from a logical channel.

12. A computer readable medium carrying instructions for a computer to perform a method for configuring logical channels in a network comprising the steps of:

determining network parameters associated with a selected network element based on communications with the selected network element;

analyzing the network parameters; and

assigning network elements to logical channels based on the network parameters.

13. The computer readable medium of claim 12, wherein the network parameters include one of: upstream or downstream modulation error ratio (MER), upstream or downstream signal to noise ratio (SNR), upstream or downstream microreflections, upstream transmit level, downstream receive power level, cable modem type, functional capabilities, network element location with in a cable plant, network element manufacturer, or type of services provided by the network element.

14. The computer readable medium of claim 12, wherein the step of assigning network elements to logical channels

includes comparing the network parameters with threshold values and assigning the network elements to a logical channel based on the comparison.

15. The computer readable medium of claim 12, further including the step of providing instructions to the network elements to realign the network elements according to the logical channels.

16. The computer readable medium of claim 15, wherein the step of providing instructions to the network elements to realign includes receiving instructions from an operator to realign the network elements.

17. The computer readable medium of claim 12, wherein the step of assigning network elements to a logical channel includes an operator providing selected network elements to be assigned or unassigned to or from a logical channel.

* * * * *