US010405457B2

(12) **United States Patent**
Boyd et al.

(10) **Patent No.: US 10,405,457 B2**
(45) **Date of Patent: Sep. 3, 2019**

(54) **APPLIANCE IMMERSION COOLING SYSTEM**

(71) Applicants: **Christopher L. Boyd**, Austin, TX (US); **James P. Koen**, Round Rock, TX (US); **David Christopher Laguna**, Austin, TX (US); **Thomas R. Turner**, Georgetown, TX (US); **Kenneth D. Swinden**, Hutto, TX (US); **Mario Conti Garcia**, Austin, TX (US); **John Charles Tribou**, Austin, TX (US)

(72) Inventors: **Christopher L. Boyd**, Austin, TX (US); **James P. Koen**, Round Rock, TX (US); **David Christopher Laguna**, Austin, TX (US); **Thomas R. Turner**, Georgetown, TX (US); **Kenneth D. Swinden**, Hutto, TX (US); **Mario Conti Garcia**, Austin, TX (US); **John Charles Tribou**, Austin, TX (US)

(73) Assignee: **Midas Green Technologies, LLC**, Austin, TX (US)

(*) Notice: Subject to any disclaimer, the term of this patent is extended or adjusted under 35 U.S.C. 154(b) by 680 days.

(21) Appl. No.: **14/355,533**

(22) PCT Filed: **Dec. 13, 2013**

(86) PCT No.: **PCT/US2013/075126**

§ 371 (c)(1),
(2) Date: **Apr. 30, 2014**

(87) PCT Pub. No.: **WO2014/109869**

PCT Pub. Date: **Jul. 17, 2014**

(65) **Prior Publication Data**

US 2015/0181762 A1 Jun. 25, 2015

Related U.S. Application Data

(60) Provisional application No. 61/737,200, filed on Dec. 14, 2012, provisional application No. 61/832,211, filed on Jun. 7, 2013.

(51) **Int. Cl.**
H01L 23/44 (2006.01)
H05K 7/20 (2006.01)

(52) **U.S. Cl.**
CPC ***H05K 7/20236*** (2013.01); ***H01L 23/44*** (2013.01); ***H05K 7/20272*** (2013.01)

(58) **Field of Classification Search**
CPC H05K 7/20236; H05K 7/20272; H01L 23/42; H01L 23/44
(Continued)

(56) **References Cited**

U.S. PATENT DOCUMENTS

4,590,538 A * 5/1986 Cray, Jr. H05K 7/20236 361/700
5,167,511 A * 12/1992 Krajewski H01R 4/01 361/785
(Continued)

FOREIGN PATENT DOCUMENTS

JP 5956100 B1 * 7/2016 ..... G06F 1/20
RU 2042294 C1 8/1995
SU 1764094 A1 9/1992

Primary Examiner — Devon Russell
(74) *Attorney, Agent, or Firm* — Jeffrey Van Myers

(57) **ABSTRACT**

A appliance immersion tank system comprising: a generally rectangular tank adapted to immerse in a dielectric fluid a plurality of appliances, each in a respective appliance slot distributed vertically along, and extending transverse to, the long axis of the tank; a primary circulation facility adapted to circulate the dielectric fluid through the tank; a secondary fluid circulation facility adapted to extract heat from the dielectric fluid circulating in the primary circulation facility, and to dissipate to the environment the heat so extracted; and a control facility adapted to coordinate the operation of the primary and secondary fluid circulation facilities as a function of the temperature of the dielectric fluid in the tank. A plenum, positioned adjacent the bottom of the tank, is adapted to dispense the dielectric fluid substantially uni-
(Continued)

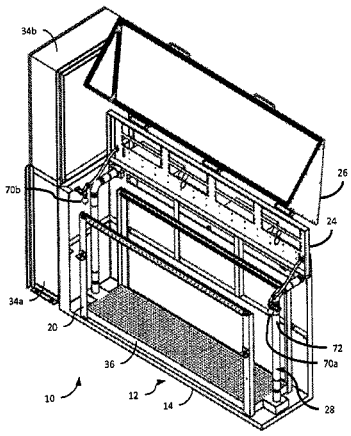

formly upwardly through each appliance slot. A weir, integrated horizontally into a long wall of the tank, is adapted to facilitate substantially uniform recovery of the dielectric fluid flowing through each appliance slot. All active and most passive components of both the primary and secondary fluid circulation facilities, and the control facility are fully redundant, and are adapted automatically to operate in a fail-soft mode.

16 Claims, 7 Drawing Sheets

(58) **Field of Classification Search**
USPC 361/699
See application file for complete search history.

(56) **References Cited**

U.S. PATENT DOCUMENTS

5,297,621	A *	3/1994	Taraci	G01R 31/2891 165/104.13
8,009,419	B2	8/2011	Attlesey et al.	
2005/0259402	A1*	11/2005	Yasui	H02M 7/003 361/716
2006/0126292	A1*	6/2006	Pfahnl	H05K 7/20563 361/695
2006/0274501	A1*	12/2006	Miller	G01R 31/2863 361/690
2011/0075353	A1*	3/2011	Attlesey	G06F 1/20 361/679.47
2011/0132579	A1*	6/2011	Best	H05K 7/20763 165/104.31
2011/0240281	A1*	10/2011	Avery	G05D 23/1917 165/287

* cited by examiner

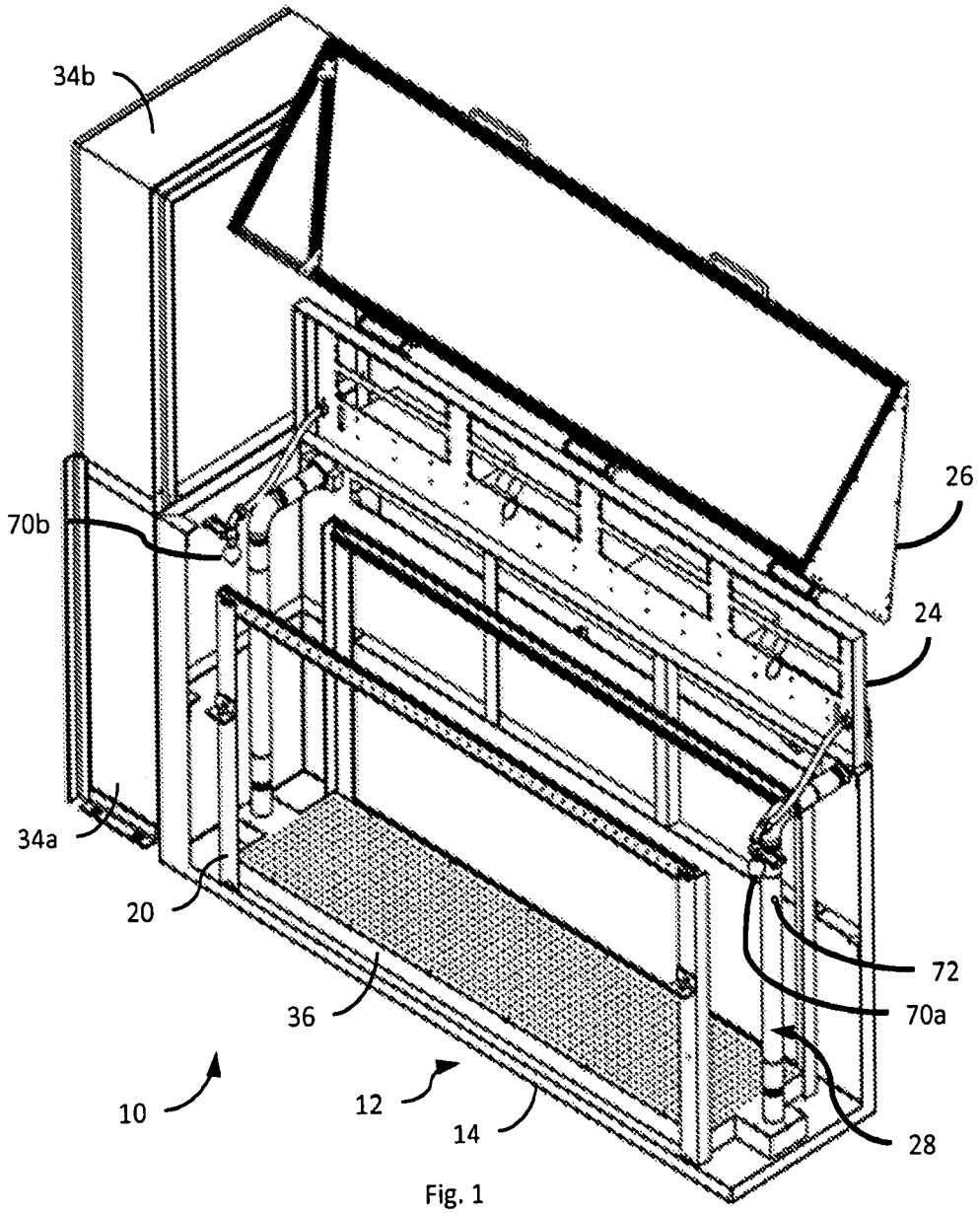

Fig. 1

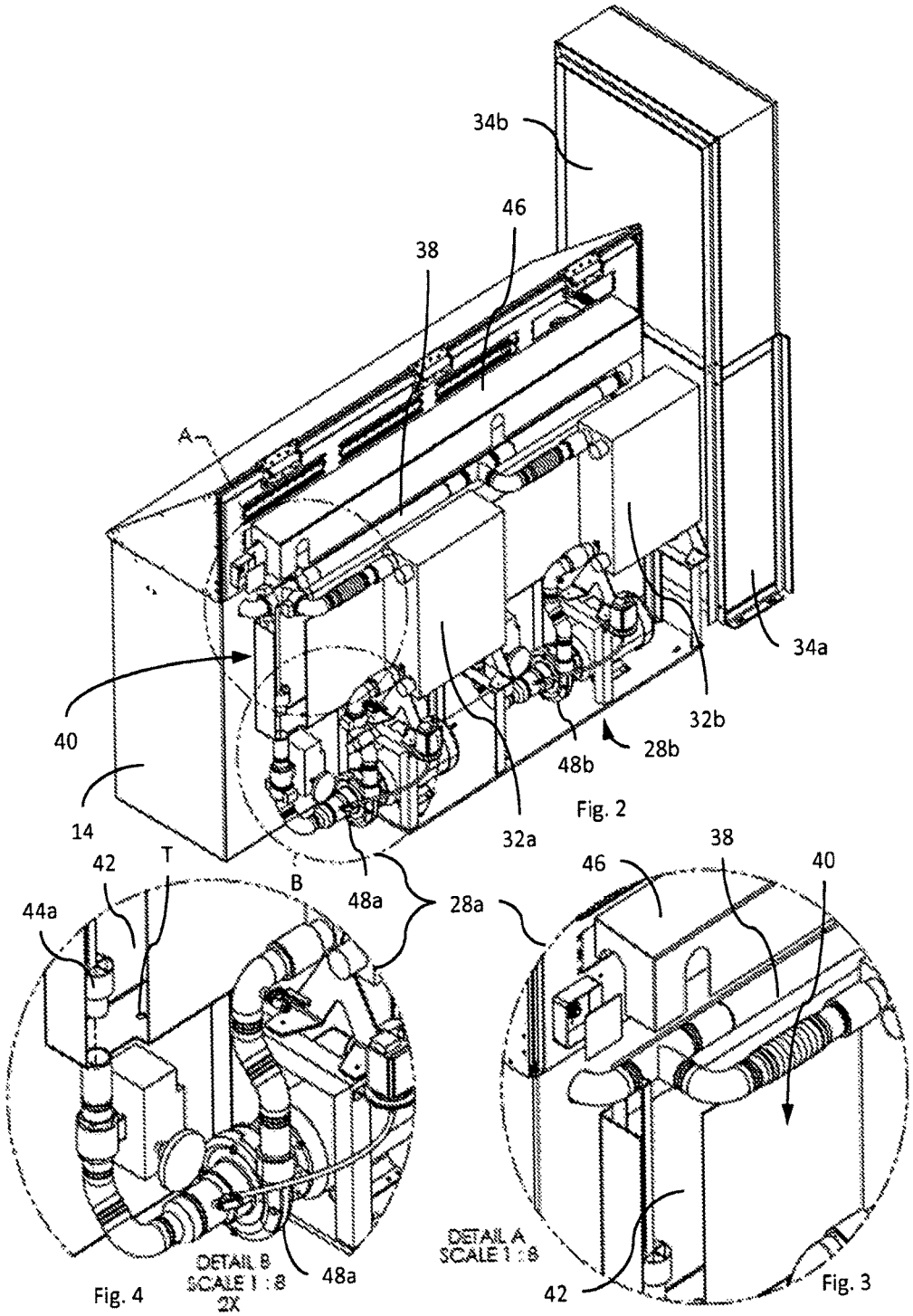
34b
46
38
A
40
14
34a
32b
28b
48b
32a
48a
28a
42
T
B
44a
DETAIL B
SCALE 1 : 8
2X
48a
Fig. 4
46
38
40
DETAIL A
SCALE 1 : 8
42
Fig. 3

Fig. 2

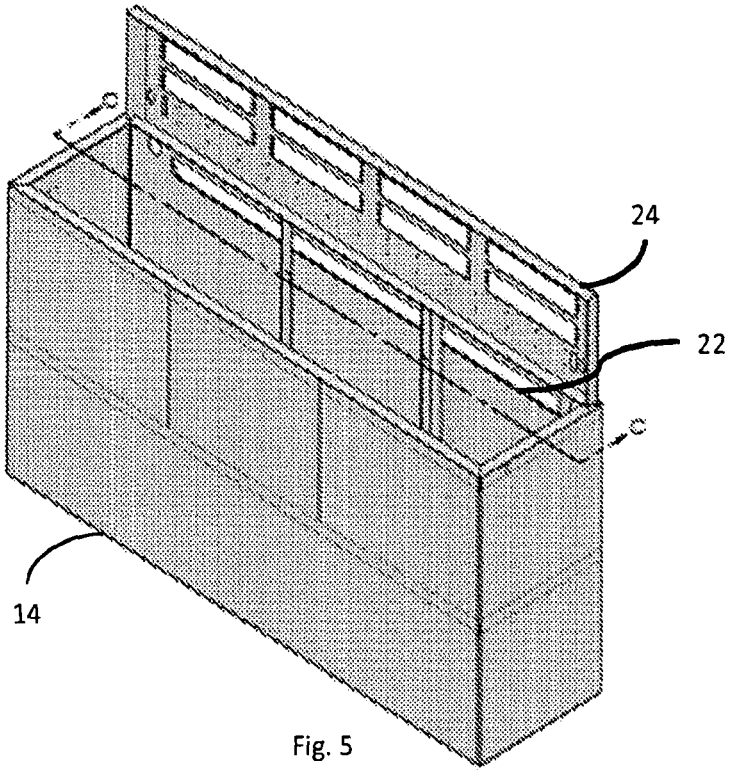

Fig. 5

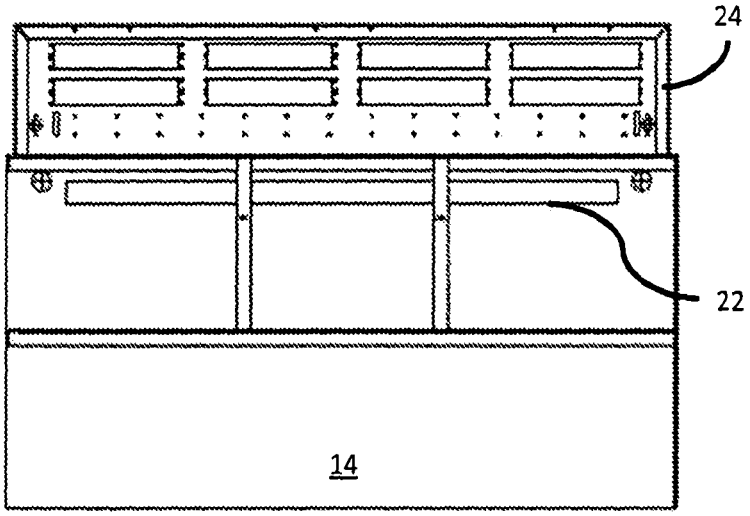

Section C-C
Fig. 6

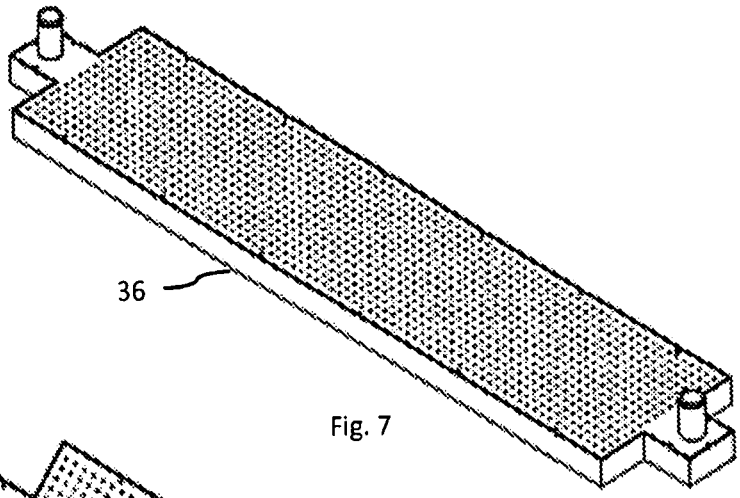

Fig. 7

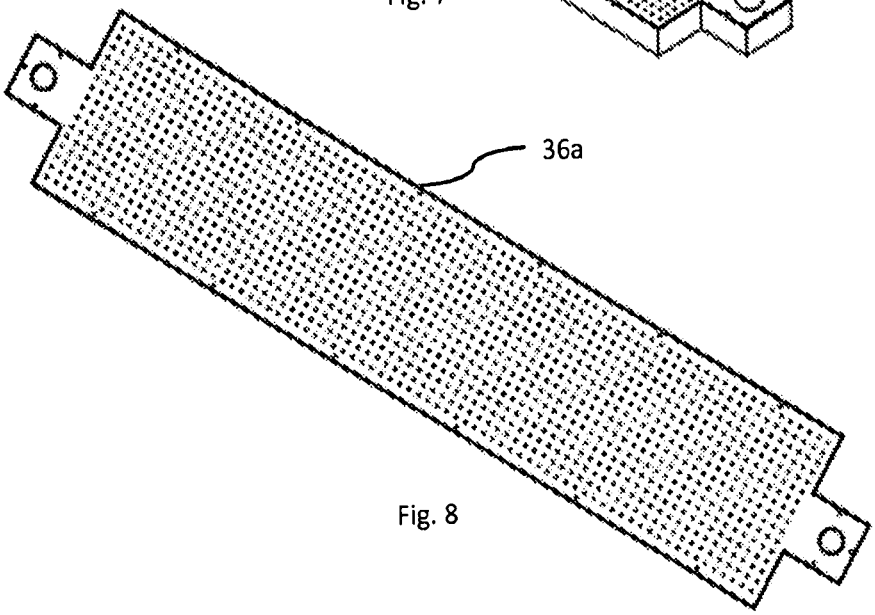

Fig. 8

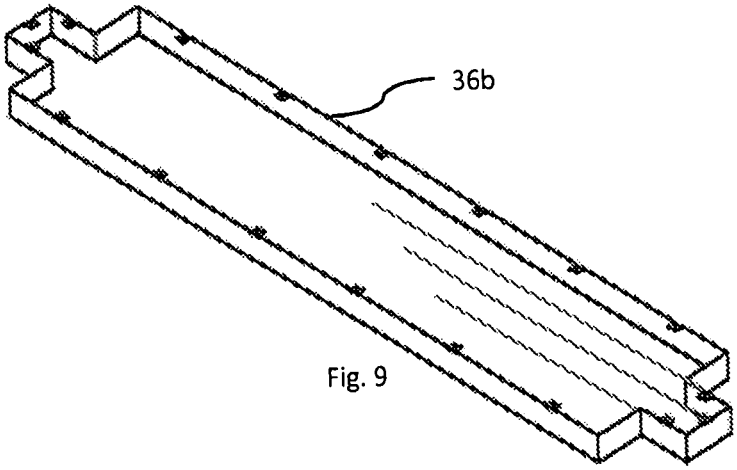

Fig. 9

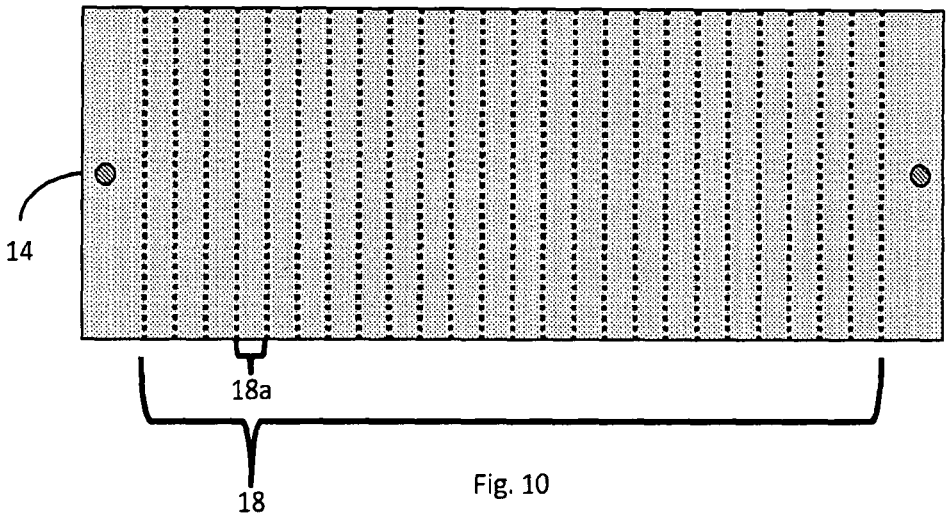

Fig. 10

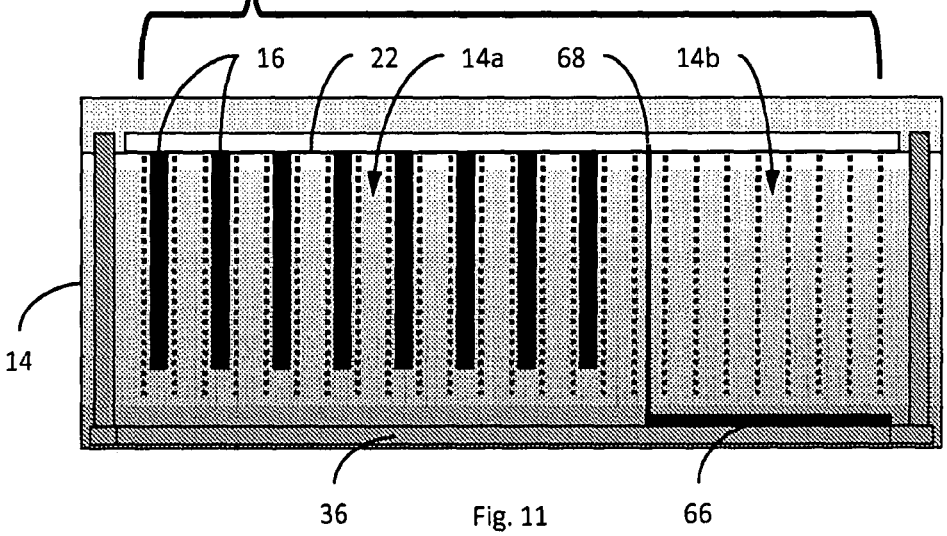

Fig. 11

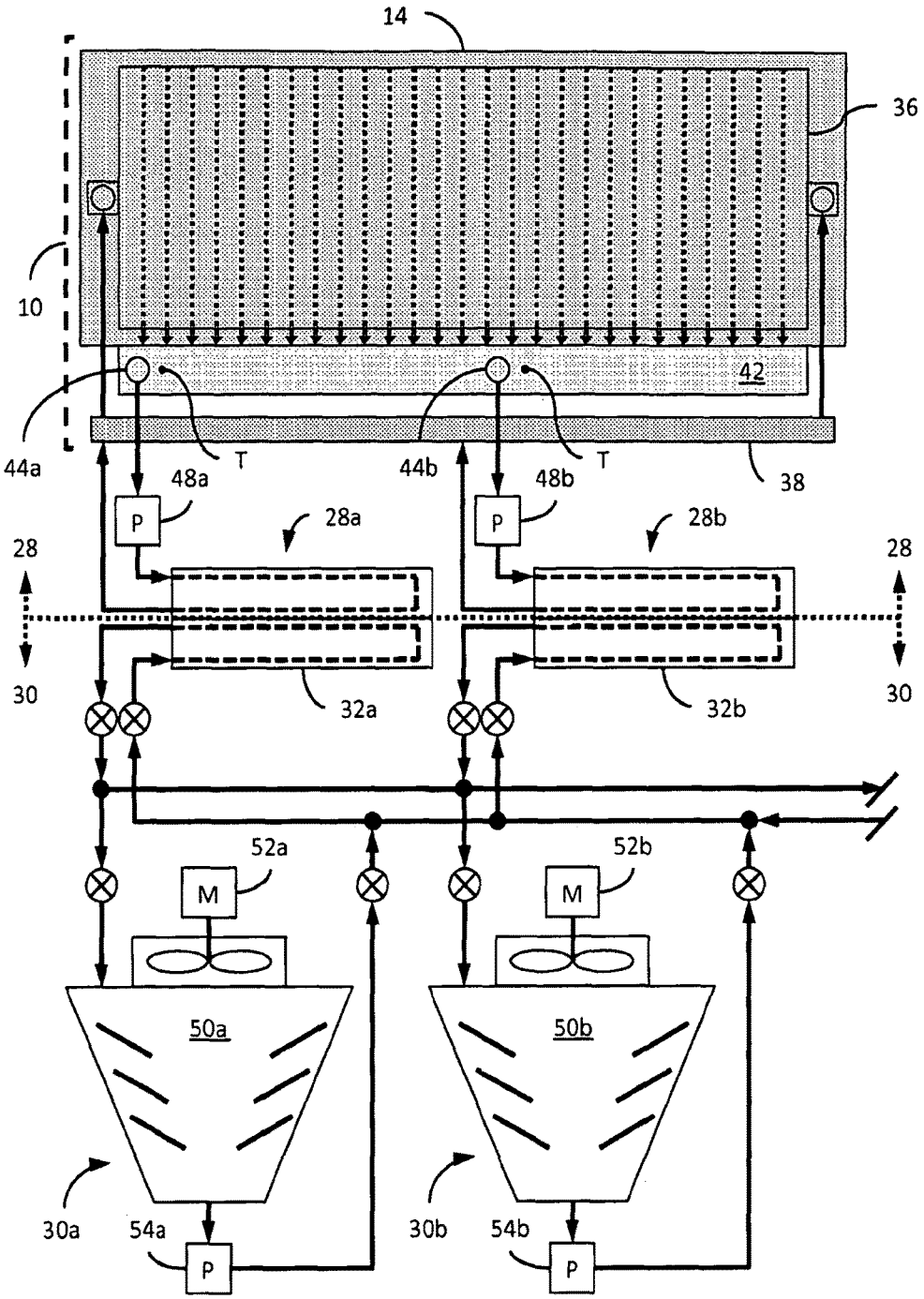
14
36
10
42
44a
T
44b
T
38
48a
48b
P
P
28a
28b
28
28
30
30
32a
32b
52a
52b
M
M
50a
50b
30a
30b
54a
54b
P
P

Fig. 12

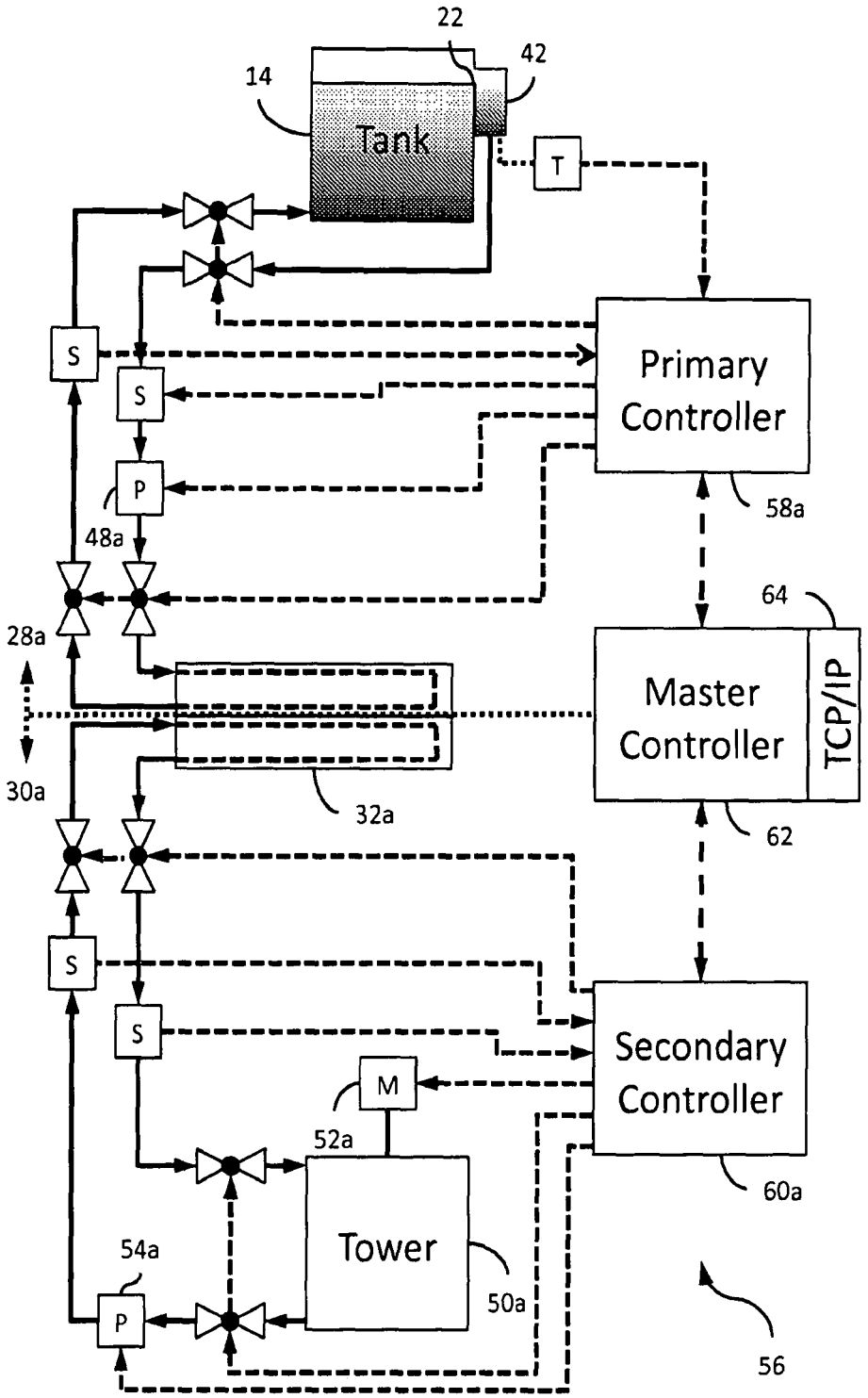
22
42
14
Tank
T
S
S
P
48a
Primary
Controller
58a
64
28a
Master
Controller
TCP/IP
30a
32a
62
S
S
Secondary
Controller
M
52a
60a
Tower
54a
50a
P
56

Fig. 13

APPLIANCE IMMERSION COOLING SYSTEM

CROSS-REFERENCE TO RELATED APPLICATIONS

This application is related to the following Provisional Applications:

1. Ser. No. 61/737,200, filed 14 Dec. 2012 ("First Parent Provisional"); and
2. Ser. No. 61/832,211, filed 7 Jun. 2013 ("Second Parent Provisional");

and hereby claims benefit of the filing dates thereof pursuant to 37 CFR § 1.78(a)(4). (Collectively, "Parent Provisionals"). The subject matter of the Parent Provisionals, each in its entirety, is expressly incorporated herein by reference.

BACKGROUND OF THE INVENTION

1. Field of the Invention

The present invention relates generally to electrical appliance cooling systems, and, in particular, to an improved appliance immersion cooling system and method of operation.

2. Description of the Related Art

In general, in the descriptions that follow, we will italicize the first occurrence of each special term of art which should be familiar to those skilled in the art of immersion cooling systems. In addition, when we first introduce a term that we believe to be new or that we will use in a context that we believe to be new, we will bold the term and provide the definition that we intend to apply to that term.

U.S. Pat. No. 4,590,538, "Immersion Cooled High Density Electronic Assembly", Cray (filed 18 Nov. 1981 and issued 20 May 1986) ("Cray"), is an early example of an immersion system for cooling electronic components during normal operation. On information and belief, the machine disclosed therein was the Cray-2 super-computer ("Cray-2") manufactured by Cray Research, Inc. ("Cray Research"), of Chippewa Falls, Wis. Of particular interest to the present application is the description of the significant advantages resulting from using an electrically non-conductive or dielectric fluid to extract heat from electronic circuit assemblies during normal operation (see, e.g., col. 1, line 66-col. 2, line 29).

On information and belief, Cray Research released, in 1985, a marketing brochure entitled "The CRAY-2 Computer System" (a copy of which is submitted herewith) describing the Cray-2. Of particular interest in this brochure is the description therein of the significant advantages resulting from using a dielectric fluid to extract heat from electronic circuit assemblies during normal operation (see, pages 10 and 13).

U.S. Pat. No. 5,167,511, "High Density Interconnect Apparatus", Krajewski, et al. (issued 27 Nov. 1992) ("Krajewski"), discloses another example of an immersion system for cooling electronic components during normal operation (see, e.g., col. 2, lines 43-51). On information and belief, a machine implementing the Krajewski system was also marketed by Cray Research as a follow-on super-computer to the Cray-2.

One particular problem in the vertical-stack-type systems disclosed in the above references is the necessity of draining the cooling fluid whenever physical access to the electronic modules was required. In general, such an operation, besides being time consuming, requires the entire system to be switched off, especially if the component requiring attention

is an essential element in the system architecture, such as the central processing unit ("CPU"). One possible solution to this problem is to immerse circuit assemblies vertically into a tank containing the cooling fluid such that each of the various assemblies can be withdrawn independently from the tank for servicing, replacement, upgrade, etc. One interesting example of such a system is disclosed in a web-presentation entitled "Puget Custom Computer's mineral-oil-cooled PC", by Nilay Patel ("Puget") (posted 12 May 2007 at 11:57 AM; a copy of which is submitted herewith). As noted by the author, the lack of supplemental apparatus in the Puget system to extract waste heat from the oil inherently limited its operating capabilities.

Another problem with the Cray Research systems in particular is the nature and cost of the chosen cooling fluid: fluorocarbon liquids. As is known, other dielectric fluids, such as mineral oil, have better heat transfer characteristics; of course, being an oil, the use thereof does represent a greater residue problem on modules that may be repairable. Notwithstanding, the Puget system implemented precisely this design choice.

US Patent Application Publication 2011/0132579, "Liquid Submerged, Horizontal Computer Appliance Rack and Systems and Method of Cooling such a Appliance Rack", Best, et al. ("Best"), discloses a appliance immersion tank system, include support apparatus for extracting waste heat from the tank cooling fluid and dissipating to the environment the heat so extracted. Although an improvement in several respects over the prior art discussed above, this system exhibits, inter alia, the following problems: generally non-uniform flow patterns through the several appliance slots within the tank, potentially resulting in uneven cooling across all slots; constricted dielectric fluid supply and return ports resulting in unnecessarily high fluid flow velocities at the respective points of connection to the tank; poor scalability; and inadequate attention to fail-soft operation.

The subject matter of all of the prior art references discussed above, each in its entirety, is expressly incorporated herein by reference.

We submit that what is needed is an improved appliance tank immersion system and method of operation. In particular, we submit that such a system should provide performance generally comparable to the best prior art techniques but more efficiently and effectively than known implementations of such prior art techniques.

BRIEF SUMMARY OF THE INVENTION

In accordance with a preferred embodiment of our invention, . . .

BRIEF DESCRIPTION OF THE SEVERAL VIEWS OF THE DRAWINGS

Our invention may be more fully understood by a description of certain preferred embodiments in conjunction with the attached drawings in which:

FIG. **1** illustrates, in partial cut-away form, a front perspective of a tank module of an appliance immersion cooling system constructed in accordance with our invention;

FIG. **2** illustrates a rear perspective of the tank module shown in FIG. **1**;

FIG. **3** illustrates a close-up perspective of a detail A of FIG. **2**;

FIG. **4** illustrates a close-up perspective of a detail B of FIG. **2**;

FIG. **5** illustrates, in perspective view, several details of the tank shown in FIG. **1**, with special emphasis on the dielectric fluid recovery weir integrated into the long rear wall of the tank;

FIG. **6** illustrates, in cross-section view, the section C-C in FIG. **5**;

FIG. **7** illustrates, in perspective view, the plenum facility shown in FIG. **1**;

FIG. **8** illustrates, in top plan view, the orifice plate portion of the plenum facility shown in FIG. **7**;

FIG. **9** illustrates, in perspective view, the chamber portion of the plenum facility shown in FIG. **7**;

FIG. **10** illustrates, in top plan view, a plurality of appliance slots distributed vertically along, and extending transverse to, a long axis of the tank of FIG. **1**;

FIG. **11** illustrates, in longitudinal cross-sectional view, the plurality of appliance slots distributed vertically along, and extending transverse to, the long axis of the tank of FIG. **1**;

FIG. **12** illustrates, in flow schematic form, one instantiation of a flow arrangement suitable for implementing our invention; and

FIG. **13** illustrates, in control schematic form, one instantiation of a flow control facility suitable for implementing our invention.

In the drawings, similar elements will be similarly numbered whenever possible. However, this practice is simply for convenience of reference and to avoid unnecessary proliferation of numbers, and is not intended to imply or suggest that our invention requires identity in either function or structure in the several embodiments.

DETAILED DESCRIPTION OF THE INVENTION

Shown in FIG. **1** (front view) and FIG. **2** (rear view) is a tank module **10** adapted for use in an appliance immersion cooling system constructed in accordance with a preferred embodiment of our invention. For convenience of reference, we have illustrated in FIG. **1** the tank facility **12** of the immersion module **10** in partial cut-away to emphasize several important internal facilities; we have shown the tank facility **12** in isolation in FIG. **5**. In general, the tank facility **12** comprises: a tank **14** adapted to immerse in a dielectric fluid a plurality of electrical appliances **16**, e.g., contemporary computer servers (see, e.g., FIG. **11**), each in a respective appliance slot **18***a* distributed vertically along, and extending transverse to, a long axis of the tank **14** (see, generally, FIG. **10**); an appliance rack facility **20** of convention design adapted to suspend the appliances **16** (see, e.g., FIG. **11**) in respective appliance slots **18** (see, FIG. **10**); a weir **22** (best seen in isolation in FIG. **5** and FIG. **6**), integrated horizontally into one long wall of the tank **14** adjacent all appliance slots **18**, and adapted to facilitate substantially uniform recovery of the dielectric fluid flowing through each of the appliance slots **18**; an interconnect panel facility **24** attached to the upper rear edge of the tank **14** and adapted to mount various appliance power distribution equipment, cable interconnection panels and the like (none shown); and a cover **26** adapted to be opened and closed from the front of the tank **14** (and which may include a translucent portion to allow viewing of the interior of the tank **14** when in the closed position). In addition to the tank facility **12**, the immersion module **10** comprises: a primary circulation facility **28** (portions of which are shown in both FIG. **1** and FIG. **2**); a secondary fluid circulation facility **30** (of which only redundant heat exchangers **32***a* and **32***b* are shown in FIG. **2**); and control equipment cabinets **34***a* and **34***b*, each adapted to accommodate the module status and control equipment associated with a respective one of the primary circulation facilities **28***a* and **28***b* (see, FIG. **13**).

As can be best seen in FIG. **2**, the primary circulation facility **28** (comprising redundant sub-facilities **28***a* and **28***b*) comprises both passive (conduits, couplers, etc.) and active (valves, pumps, sensors, etc.) components; a subset of the passive components are shared, whereas, in general, the active components are duplicated and adapted to cooperate in operation as separate, redundant sub-facilities. Excluding the tank **14**, the primary shared component is the plenum facility **36** (see, FIG. **1** and FIG. **7**) comprising an orifice plate **36***a* (see, FIG. **8**) and a plenum chamber **36***b* (see, FIG. **9**). As can be seen in FIG. **1**, cooled dielectric fluid is pumped into both ends of the plenum facility **36** via a shared distribution header **38** (see, FIG. **2** and FIG. **3**). In general, the plenum plate **36***a* comprises at least one row of orifices vertically aligned with each appliance slot **18***a*, with the dimensions and flow rates of each set being adapted to provide substantially equal flow of the dielectric fluid upwardly into each appliance slot **18***a*. Preferably, each appliance slot **18***a* is supplied via several rows of orifices, thus generally tending to reduce the volume of the dielectric fluid exiting each orifice and to make the flow of dielectric fluid more uniform upwardly through the appliance slots **18**. One further shared component is the dielectric fluid recovery facility **40** (FIG. **2**) comprising a dielectric fluid recovery reservoir **42** (see, FIG. **3**, FIG. **4** and FIG. **13**) positioned vertically beneath the overflow lip of the weir **22** and adapted smoothly to receive the dielectric fluid as it flows over the weir **22**; the dielectric fluid recovery reservoir **42** is further adapted to allow the recovered fluid to be removed from the reservoir **42** via redundant recovery ports **44***a* and **44***b* (only port **44***a* can be seen in FIG. **2** as the port **44***b* is obscured by the heat exchanger **32***a*; but see FIG. **12**). As can be seen in both FIG. **3** and FIG. **4**, we consider it desirable to provide a vortex breaker at the input of each of the recovery ports **44**. Also, we provide a removable recovery reservoir cover **46** adapted to also cover a major portion of the distribution header **38**; note that, in both FIG. **2** and FIG. **3**, we have illustrated the reservoir cover **46** in a partially raised orientation so as to better depict details that would otherwise be obscured. Note that we have constructed the reservoir **42** such that the average height of dielectric fluid above the recovery ports **44** develops sufficient hydrostatic head to meet the requirements of the pumps **48**, while also tending to minimize the likelihood of breaking suction during normal operation.

At this point in the primary circulation facility **28**, we provide fully redundant sub-facilities **28***a* and **28***b*, each comprising a primary circulation pump (**48***a* and **48***b*) and associated passive and active components which, collectively, provide the motive power for circulating the dielectric fluid through the shared components and tank **14**. As can be generally seen, each of these sub-facilities **28***a* and **28***b* is adapted to recover the dielectric fluid exiting the tank **14** via the weir **22**, re-pressurize the recovered fluid, pass the re-pressurized fluid through a respective one of the heat exchangers **32***a* and **32***b*, and then back to the plenum facility **36** via the header **38**.

Shown in FIG. **12** is one flow arrangement suitable for integrating our tank module **10** into a fully redundant, appliance immersion cooling system, comprising the primary circulation facility **28** and the secondary fluid circulation facility **30**. In general, the secondary fluid circulation facility **30** comprises redundant secondary circulation sub-

facilities **30***a* and **30***b*, each of which is adapted to circulate a cooling fluid, e.g., treated water, through the respective heat exchanger **32***a* and **32***b* to extract heat from dielectric fluid counter-circulating therethrough and to dissipate to the environment the heat so extracted. In the illustrated embodiment, each of the secondary fluid sub-facilities **30***a* and **30***b* comprise conventional cooling towers **50***a* (including fan facility **52***a*) and **50***b* (including fan facility **52***b*), and secondary circulation pumps **54***a* and **54***b*. To facilitate flexible operation in installations including multiple immersion modules **10** in combination with a plurality of secondary circulation sub-facilities **30**, a common header arrangement can be implemented as illustrated in the secondary fluid circulation loop, with flow control valves located at key flow control points as is known.

Shown in FIG. **13** is a control facility **56** adapted to monitor and control the operation of both the immersion module **10** (including all active components of the primary circulation facility **28**), and the secondary fluid circulation facility **30**. As will be evident to those skilled in this art, efficient operation of our immersion module **10** requires continuous monitoring and control of several essential operating parameters, including fluidic temperatures, pressures, conductivity and pH at several points in the primary and secondary circulation loops. Although the several sensory and control functions can be implemented using traditional dedicated hardware components, we prefer to employ at least one programmable logic controller ("PLC"), commercially available from any of a number of respected vendors, e.g., the Allen-Bradley brand of PLCs from Rockwell Automation, Inc. In the instantiation illustrated in FIG. **13**, we have depicted: a primary controller **58***a* adapted to monitor and control the operation of the primary circulation sub-facility **28***a* as a function of the temperature of the dielectric fluid in the tank **14**; a secondary controller **60***a* adapted to monitor and control the operation of the secondary fluid circulation sub-facility **30***a* as a function of the temperature of the dielectric fluid flowing through the heat exchanger **32***a*; and a master controller **62** adapted to coordinate the activities of the primary controller **58***a* and secondary controller **60***a*. As can be seen, we have incorporated into the primary circulation sub-facility **28***a*: supply and return sensors, including a temperature probe, T, inserted into a thermowell (not shown) installed in the bottom of the reservoir **42** adjacent a respective return port **44***a* (note that, in FIG. **4**, only one of the holes that receive the thermowells is illustrated, but both holes are illustrated in FIG. **12**); a pair of sensor facilities, S, which may sense temperature, pressure and conductivity, as deemed desirable); and return (and, if desired, supply) flow control valves and controls for the primary circulation pump **48***a*; of course, a redundant set of these components exists for the primary circulation sub-facility **28***b*. In general, the goal is to maintain the temperature of the dielectric fluid in the tank **14** between a predetermined minimum temperature and a predetermined maximum temperature.

As noted above, we have provided separate control equipment cabinets **34***a* and **34***b*, each adapted to accommodate the several components comprising a respective one of the primary controllers **58***a* and **58***b*. For convenience of access, we prefer to co-locate with each of the cooling towers **50** a protective housing (not shown) for the respective secondary controller **60**. Of course, the control facility **56** can be instantiated as a single, multi-module PLC facility, with similar or other combinations of monitoring devices as deemed most appropriate for a particular installation. Alternatively, one or more, and perhaps all, of the functions performed by the controllers **58**, **60** and **62** may be implemented in the form of dedicated application-specific software executing on a conventional computer platform having the appropriate resources; indeed, it would be entirely feasible to implement the entire control facility **56** on a server **16** installed in a tank **14**.

One desirable enhancement that we recommend is a remote control facility, implemented, e.g., via the master controller **62** (or by way of a direct, per-controller interface), adapted to facilitate remote monitoring of system status (e.g., temperatures, pressures, etc.) and control over system control parameters (e.g., temperature and pressure limits, etc.) to the primary controllers **58** and secondary controllers **60**. For example, using a conventional data communication hardware module **64**, e.g., an ethernet card implementing the TCP/IP protocol, a modern web browser can be adapted to provide a graphical user interface ("GUI") with sufficient functionality to facilitate monitoring and control of an entire installation from a remote location. Such a GUI may be implemented using any of a number of programming paradigms, e.g., PHP, .NET and the like.

Operational control of redundant, continuous process flow systems is generally well known. Preferable, each of the several redundant sub-facilities are routinely activated to assure current functionality, and to allow the inactive sub-facility to be serviced according to an established schedule. We believe this continuous rotation of system resources to be so important that we recommend switching the sub-facilities at least once, and preferably, several times, per day; although this is possible to implement manually, we prefer to enable the master controller **62** to control the sequencing of the several switch-over operations. One further aspect of this sophistication in control is the ability to perform stress testing of the several sub-systems under controlled conditions so as to assure appropriate response to real-time emergencies.

In our First Parent Provisional, we have disclosed an alternate embodiment comprising an appliance immersion tank facility wherein the function of the plenum facility **36** is performed by a manifold facility comprising a ladder-arrangement of tubular spray bars, each bar of which supplies dielectric fluid to a respective appliance slot. As we noted, one particular advantage of this arrangement is that individual spray bars may be shut off if the respective appliance slot is not occupied and, thus, save energy. To further increase energy efficiency, we have provided optional vertical flow barriers adapted to partition the tank into an active portion, having active appliances, and a stagnant portion, having no active appliances. One further enhancement we disclosed is the provision of temperature sensors per appliance slot, such that the flow rate through each spray bar can be dynamically varied as a function of the temperature of the dielectric fluid exiting the respective slot. Other operative configurations will be readily perceived by those skilled in this art.

In a manner analogous to the embodiment described in our First Parent Provisional, it would be advantageous, from an energy point of view, to provide a plurality of flow barrier plates **66** (shown by way of example only in FIG. **11**), each adapted to be attached to the top of the plenum facility **36** so as substantially to block the flow of the dielectric fluid through the row(s) of orifices in the plenum plate **36***a* corresponding to at least a respective one of the appliance slots **18***a*; an elastomeric layer (not shown) could be provided on the interface surface of the plate(s) **66** to enhance the sealing effect. Such an arrangement would allow the total flow through the plenum facility **36** to be adjusted, in the

field, as a function of the actual number of active appliances **16** in the tank **14**. Further, this arrangement can incorporate a relocatable vertical baffle plate **68** (see FIG. **11**) adapted substantially to partition the tank **14** into an active portion **14***a* containing the active appliances **16** and an inactive portion **14***b* containing no appliances (or at least no active appliances **16**); preferably, the baffle plate **68** is adapted to be mounted in the appliance rack facility **28** in a manner similar to an actual appliance **16** (the baffle plate **68** need not fully block the flow of dielectric fluid between the active portion **14***a* and inactive portion **14***b*, but only significantly impede the flow between these portions). Note that, in the example scenario illustrated in FIG. **11**, we have shown one possible arrangement of a total of 8 active appliances **16** distributed across 16 appliance slots **18***a* so as to spread the total heat load across adjacent empty slots **18***a*. Such an optimal arrangement is possible only if less than a majority of the available appliance slots **18***a* are occupied by an active appliance **16**. Clearly, such optional adjunct facilities enhance flexibility in operation, accommodating dynamic adjustment of the flow rates in the primary circulation sub-facilities **28***a* and **28***b* under variable heat loads, while providing opportunities to conserve energy that might otherwise be expended moving the dielectric fluid through the inactive portion **14***b* of the tank **14**. Other operative configurations will be readily perceived by those skilled in this art.

In our Second Parent Provisional, we have disclosed another embodiment comprising a more conventional, less-modularized instantiation with appropriate flow and control facilities. In this embodiment, we chose to implement tank clusters, comprising, e.g., **4** appliance immersion tank facilities, with substantially all of the other equipment being constructed from stand-alone, commercially available components. Such an arrangement offers greater opportunities to select and install improved components, or to add enhancements to the installation, as deemed desirable after initial installation. Other operative configurations will be readily perceived by those skilled in this art.

As we noted above with reference to the embodiment illustrated in FIG. **12**, the secondary flow header facility is well adapted to allow any secondary circulation sub-facility **30** to be connected to any active heat exchanger **32**. Such a facility provides great flexibility in dealing with unusual system conditions, especially in installations wherein the secondary circulation sub-facilities **30***a* and **30***b* are each sized to support a cluster of tank modules **10**. Imagine, for example, that, while one of the secondary circulation facilities **30**, say sub-facility **30***a*, is being serviced, the activities of the set of appliances **16** in one tank **14** in the cluster are higher than normal, resulting in a rise in temperature in that tank **14** above the desired maximum. In response, the master controller **62** can direct Primary Controllers **58***a* and **58***b* assigned to tank **14** to operate both of the primary circulation sub-facilities **28***a* and **28***b* simultaneously, i.e., in parallel. Using the secondary flow header facility, the heat being extracted by both of the heat exchangers **32***a* and **32***b* may be dissipated using the resources of the single on-line secondary circulation sub-facility **30***b*. Thus, one clear advantage of this alternate embodiment is the ability dynamically to perform load balancing across all system resources. Other operative configurations to support sub-system load balancing will be readily perceived by those skilled in this art.

Preferably, one or more filters (not shown) are included in the flow path through each of the primary circulation sub-facilities **28***a* and **28***b* to remove any particulates or other undesirable foreign matter that may have been picked up by the dielectric fluid on its passage though the entire primary circulation facility **28**; chemical sensors may also be provided to detect the presence of unexpected chemicals that may indicate failure of sub-components within one of the appliances **16**. Similar components, such as pH sensors, may also included in the secondary fluid circulation facility **30**.

As can be seen generally in FIG. **1**, we provide a pair of low dielectric fluid level sensors **70***a* and **70***b* adapted to trigger an alarm signal in the event that, for whatever reason, the level of the dielectric fluid in the tank **14** drops below a predetermined minimum level. Additionally, the responsive primary controller **58** can initiate other actions to address the detected problem, including activating audio alarms, transmitting electronic alert signals and the like.

To solve a reciprocal problem, namely leakage from an external portion of the primary circulation loop **28** resulting in the dielectric fluid in the tank **14** being back-siphoned through the plenum facility **36**, we recommend incorporating a siphon breaker **72** (see, FIG. **1**) in the supply pipe at a predetermined location well above the plenum facility **36** but somewhat below the level of the weir **24**. Such a siphon breaker can be as simple as a relatively small diameter hole **72** drilled through the supply pipe at the selected location; due to the relatively high viscosity of the dielectric fluid, even when heated, any resulting leakage during normal operation will be relatively insignificant. Other operative responses to address these and other unusual fluidic conditions will be readily perceived by those skilled in this art.

As is known (see, e.g., Best), many conventional, commercially available electrical/electronic appliances include components that will not function correctly if immersed in a dielectric fluid, especially one as viscous as mineral oil: cooling fans and rotating media disk drives. In general, all cooling fans are unnecessary in an immersion cooling system and can be simply removed. The media drives, however, are usually necessary for normal appliance operation. One option is to remove each drive, totally seal the drive against fluid entry, and reinstall the now-sealed drive (pre-sealed drives are also available). Another option is to remove the drive and mount it on the interconnect panel facility **24**; typically special cabling will be required to re-attach the drive to the internal appliance socket. Yet another option is to replace the rotating media drive with a solid-state drive having no moving components. Other operative configurations will be readily perceived by those skilled in this art.

It will be recognized that, in all of the embodiments described herein, emphasis was placed on minimizing the total volume of the dielectric fluid circulating throughout each immersion module **10**. We submit that the key concept here is to move the secondary fluid to the point of heat exchange with the primary fluid, rather than to move the primary fluid to the point of heat exchange with the secondary fluid. Thus, in our preferred embodiment, all of the essential components of the primary circulation facility **28** are tightly co-located with the tank **14** so as to form a highly-integrated module. Further, our placement of the reservoir **42** outside of (but immediately adjacent to) the tank **14** tends to reduce the total volume of the dielectric fluid (as opposed to the alternative arrangement we proposed in our First Provisional, wherein a recovery trough was disposed within the tank **14**); then, we positioned the components comprising the primary circulation sub-facilities **28** so as to be vertically beneath the footprint of the reservoir **42**. In addition to conserving valuable floor space in a typical data center installation, the resulting modular configuration facilitates both easy initial installation and subsequent

upgrade to efficiently satisfy increasing data center workloads. Indeed, our invention greatly enhances system scalability, a key concern to data center operators. Finally, our system-wide redundancy substantially assures fail-soft operation during periods of unusual environmental conditions, infrastructure instability or political unrest.

Although we have described our invention in the context of particular embodiments, one of ordinary skill in this art will readily realize that many modifications may be made in such embodiments to adapt either to specific implementations. By way of example, it will take but little effort to adapt our invention for use with electronic appliances other than contemporary servers; and to adjust the dimensions of the appliance accommodation slots accordingly. Similarly, practitioners in the art will readily recognize that other, known secondary circulation facilities may be employed effectively, including forced air, vapor compression systems, earth-water sink loops, waste heat recovery and recycling systems, and the like (see, e.g., the several alternatives discussed in Best). Further, the several elements described above may be implemented using any of the various known manufacturing methodologies, and, in general, be adapted so as to be operable under either hardware or software control or some combination thereof, as is known in this art.

Thus it is apparent that we have provided an improved system and method of operation for immersion cooling of appliances and the like. In particular, we submit that such a method and apparatus provides performance generally comparable to the best prior art techniques but more efficiently and effectively than known implementations of such prior art techniques.

What we claim is:

1. An appliance immersion cooling system comprising:

a tank adapted to immerse in a dielectric fluid a plurality of electrical appliances, each in a respective appliance slot distributed vertically along, and extending transverse to, a long wall of the tank, the tank comprising:

a weir, integrated horizontally into the long wall of the tank adjacent all appliance slots, having an overflow lip adapted to facilitate substantially uniform recovery of the dielectric fluid flowing through each appliance slot; and;

a dielectric fluid recovery reservoir positioned vertically beneath the overflow lip of the weir and adapted to receive the dielectric fluid as it flows over the weir;

a primary circulation facility adapted to circulate the dielectric fluid through the tank, comprising:

a plenum, positioned adjacent the bottom of the tank, adapted to dispense the dielectric fluid substantially uniformly upwardly through each appliance slot;

a secondary fluid circulation facility adapted to extract heat from the dielectric fluid circulating in the primary circulation facility, and to dissipate to the environment the heat so extracted; and

a control facility adapted to coordinate the operation of the primary and secondary fluid circulation facilities as a function of the temperature of the dielectric fluid in the tank.

2. The system of claim **1** wherein the tank and primary circulation facility comprise a highly-integrated module.

3. The system of claim **1** wherein the tank further comprises:

an interconnect panel facility adapted to mount appliance support equipment.

4. The system of claim **1** wherein the primary circulation facility further comprises:

at least first and second primary circulation sub-facilities, each adapted to operate independently to circulate the dielectric fluid through the tank;

wherein the control facility is further adapted to coordinate the operation of the first and second primary circulation sub-facilities and the secondary fluid circulation facilities so to maintain the temperature of the dielectric fluid in the tank substantially between a predetermined minimum temperature and a predetermined maximum temperature.

5. The system of claim **1** wherein the control facility further comprises a communication facility adapted to facilitate monitoring and control of the control facility from a remote location.

6. A tank module adapted for use in an appliance immersion cooling system, the tank module comprising:

a tank adapted to immerse in a dielectric fluid a plurality of electrical appliances, each in a respective appliance slot distributed vertically along, and extending transverse to, a long wall of the tank, the tank comprising:

a weir, integrated horizontally into the long wall of the tank adjacent all appliance slots, having an overflow lip adapted to facilitate substantially uniform recovery of the dielectric fluid flowing through each appliance slot; and;

a dielectric fluid recovery reservoir positioned vertically beneath the overflow lip of the weir and adapted to receive the dielectric fluid as it flows over the weir;

a primary circulation facility adapted to circulate the dielectric fluid through the tank, comprising:

a plenum, positioned adjacent the bottom of the tank, adapted to dispense the dielectric fluid substantially uniformly upwardly through each appliance slot; and

a control facility adapted to control the operation of the primary fluid circulation facility as a function of the temperature of the dielectric fluid in the tank.

7. The module of claim **6** wherein the tank and primary circulation facility comprise a highly-integrated module.

8. The module of claim **6** wherein the tank further comprises:

an interconnect panel facility adapted to mount appliance support equipment.

9. The module of claim **6** wherein the primary circulation facility further comprises:

at least first and second primary circulation sub-facilities, each adapted to operate independently to circulate the dielectric fluid through the tank;

wherein the control facility is further adapted to coordinate the operation of the first and second primary circulation sub-facilities so to maintain the temperature of the dielectric fluid in the tank substantially between a predetermined minimum temperature and a predetermined maximum temperature.

10. The module of claim **6** wherein the control facility further comprises a communication facility adapted to facilitate monitoring and control of the control facility from a remote location.

11. A tank module (**10**) adapted for use in an appliance immersion cooling system, the tank module comprising:

a tank (**12**) adapted to immerse in a dielectric fluid a plurality of electrical appliances (**16**), each in a respective appliance slot (**18**) distributed vertically along, and extending transverse to, a long wall of the tank (**10**), the tank (**10**) comprising:

a weir **22**, integrated horizontally into the long wall of the tank (**10**) adjacent all appliance slots (**18**),

adapted to facilitate substantially uniform recovery of the dielectric fluid flowing through each appliance slot (**18**);

a primary circulation facility (**28**) adapted to circulate the dielectric fluid through the tank (**10**), comprising:

a plenum (**36**), positioned adjacent the bottom of the tank (**10**), adapted to dispense the dielectric fluid substantially uniformly upwardly through each appliance slot (**18**); and

a control facility (**58**) adapted to control the operation of the primary fluid circulation facility (**28**) as a function of the temperature of the dielectric fluid in the tank (**10**).

12. The tank module of claim **11** wherein the tank further comprises:

an interconnect panel facility (**24**) adapted to mount appliance support equipment.

13. The module of claim **11** wherein the primary circulation facility further comprises:

at least first and second primary circulation sub-facilities (**28***a*, **28***b*), each adapted to operate independently to circulate the dielectric fluid through the tank;

wherein the control facility is further adapted to coordinate the operation of the first and second primary circulation sub-facilities so to maintain the temperature of the dielectric fluid in the tank substantially between a predetermined minimum temperature and a predetermined maximum temperature.

14. The module of claim **11** wherein the control facility further comprises a communication facility (**62**, **64**) adapted to facilitate monitoring and control of the control facility from a remote location.

15. An appliance immersion cooling system comprising a tank module according to any one of the preceding claims **11** through **14**.

16. An appliance immersion cooling system according to claim **15**, further comprising:

a secondary fluid circulation facility adapted to extract heat from the dielectric fluid circulating in the primary circulation facility, and to dissipate to the environment the heat so extracted.

* * * * *