US 20120105740A1

(19) United States

(12) Patent Application Publication

Jannard et al.

(10) Pub. No.: US 2012/0105740 A1

(43) Pub. Date: May 3, 2012

(54) **EYEWEAR WITH DETACHABLE ADJUSTABLE ELECTRONICS MODULE**

(75) Inventors: **James H. Jannard**, Eastsound, WA (US); **Carlos Reyes**, (US)

(73) Assignee: **OAKLEY, INC.**, Foothill Ranch, CA (US)

(21) Appl. No.: **13/196,835**

(22) Filed: **Aug. 2, 2011**

Related U.S. Application Data

(63) Continuation-in-part of application No. 12/730,106, filed on Mar. 23, 2010, now Pat. No. 7,988,283, which is a continuation of application No. 12/331,327, filed on Dec. 9, 2008, now Pat. No. 7,682,018, which is a continuation of application No. 11/352,938, filed on Feb. 13, 2006, now Pat. No. 7,461,936, which is a continuation-in-part of application No. 10/993,217, filed on Nov. 19, 2004, now Pat. No. 7,278,734, which is a continuation-in-part of application No. 10/628,831, filed on Jul. 28, 2003, now Pat. No. 7,150,526, which is a continuation-in-part of application No. 10/004,543, filed on Dec. 4, 2001, now Pat. No. 6,966,647, which is a continuation of application No. 09/585,593, filed on Jun. 2, 2000, now Pat. No. 6,325,507, said application No. 11/352,938 is a continuation-in-part of application No. 11/022,367, filed on Dec. 22, 2004.

(60) Provisional application No. 60/399,317, filed on Jul. 26, 2002, provisional application No. 60/460,154, filed on Apr. 3, 2003, provisional application No. 60/652,272, filed on Feb. 11, 2005, provisional application No. 60/652,937, filed on Feb. 14, 2005, provisional application No. 60/729,645, filed on Oct. 24, 2005.

Publication Classification

(51) **Int. Cl.**
H04N 5/64 (2006.01)
G02C 11/00 (2006.01)

(52) **U.S. Cl.** ... **348/794**; 351/158; 348/838; 348/E05.128

(57) **ABSTRACT**

A detachable adjustable electronics module may be removably or permanently connected to eyewear. The module may include electronics for processing audio and/or video input and/or output signals. The module may be provided with an adjustable arm, for adjustably carrying a speaker. The module and/or the speaker may be adjusted relative to the wearer in any of the anterior-posterior direction, the inferior-superior direction and laterally. Rotation adjustments may also be accomplished. Eyewear may be provided with only a single module, on a single side, or with two modules, one on each side, such as to provide stereo audio or dual mono sound.

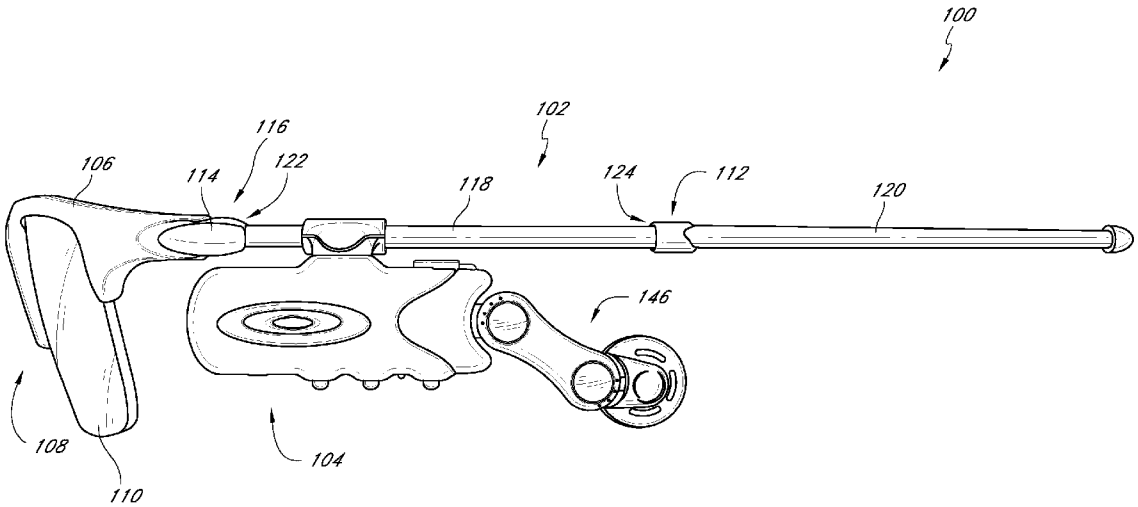

Luxottica Ex. 1005
IPR Petition USP 11,487,138

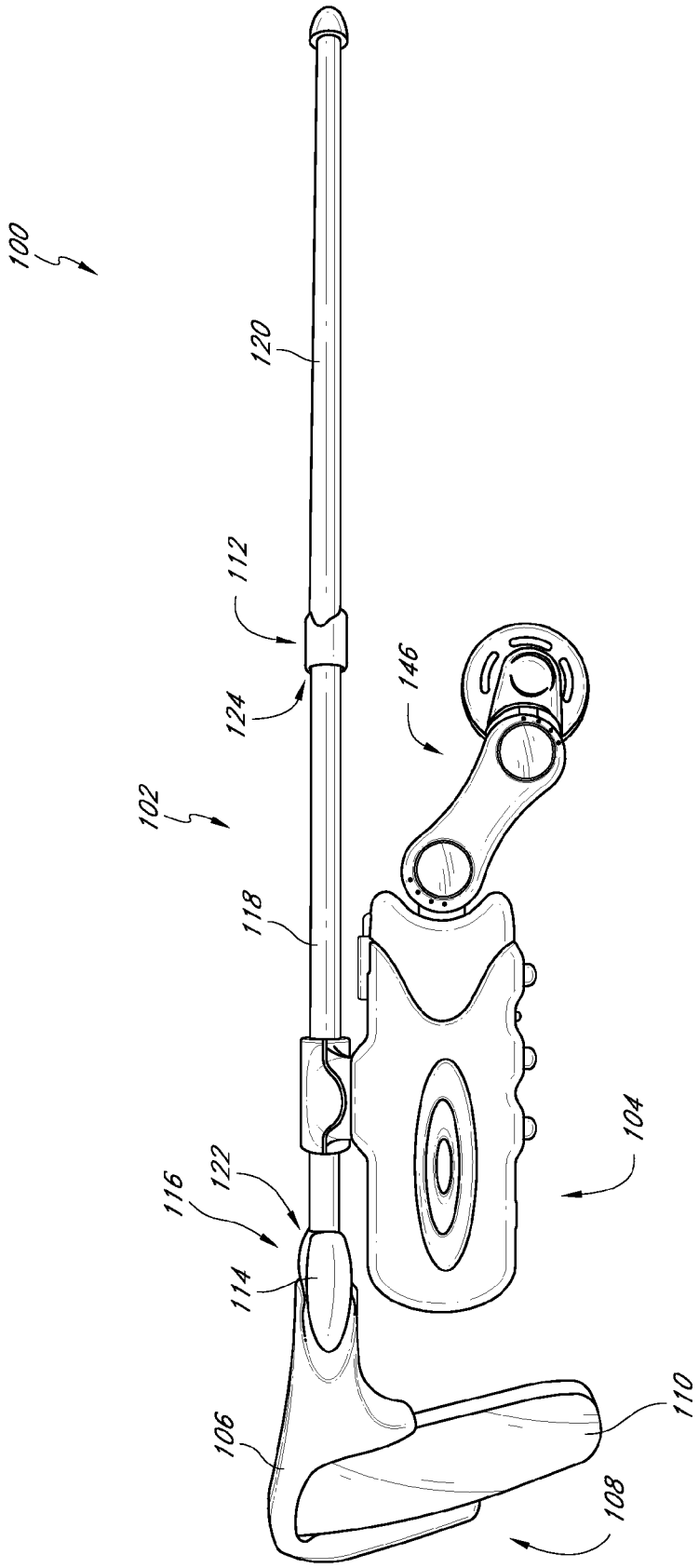

FIG. 1

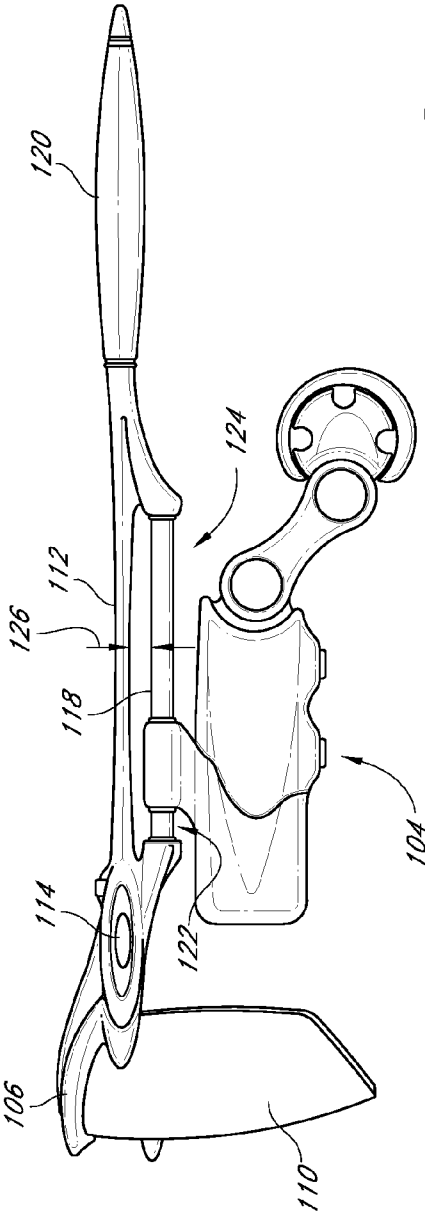

FIG. 2

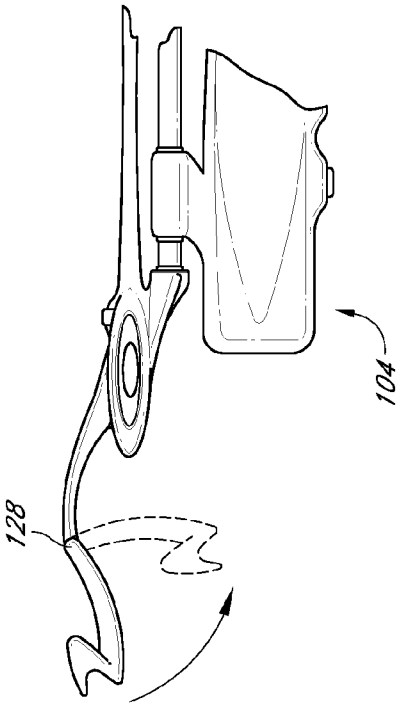

FIG. 2A

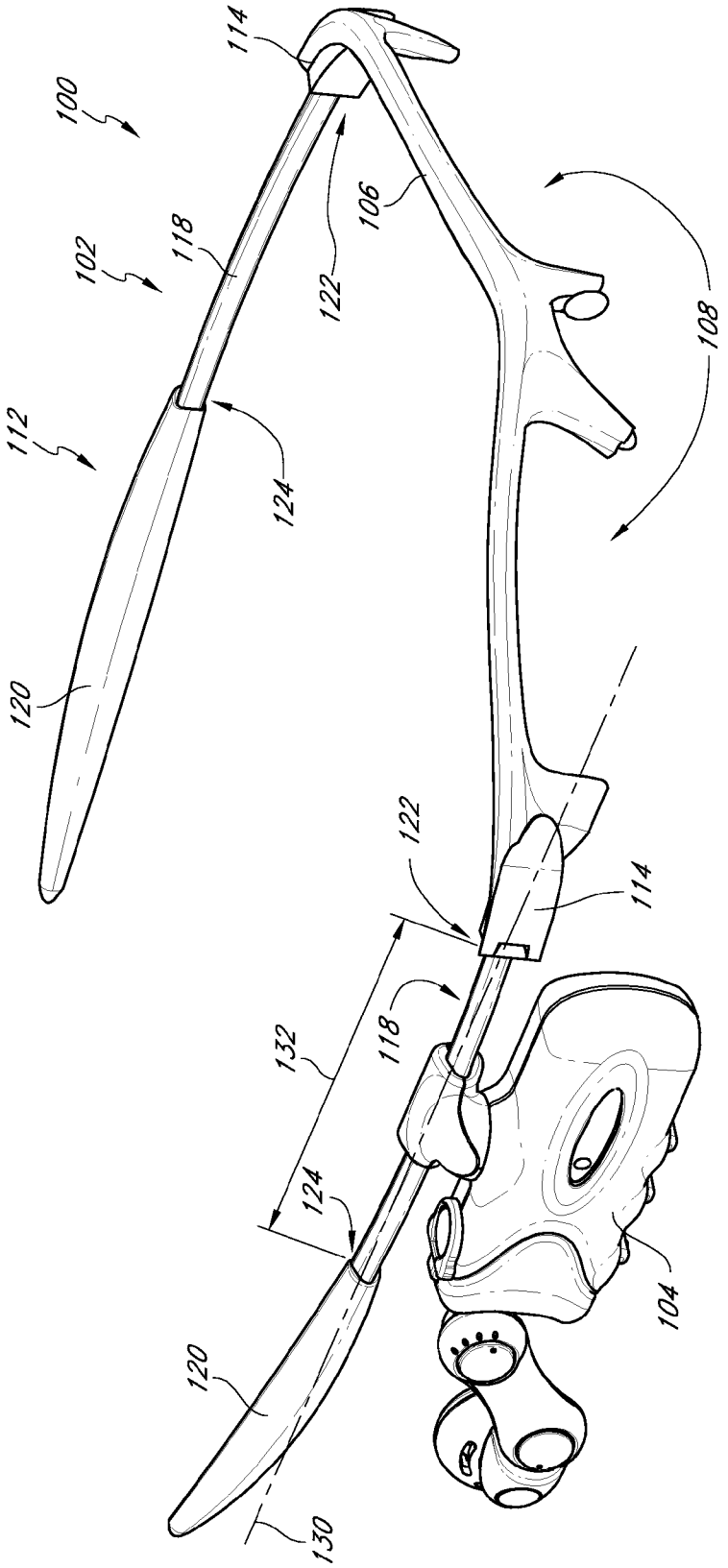
100
102
104
106
108
112
114
114
118
118
120
120
122
122
124
124
130
132

FIG. 3

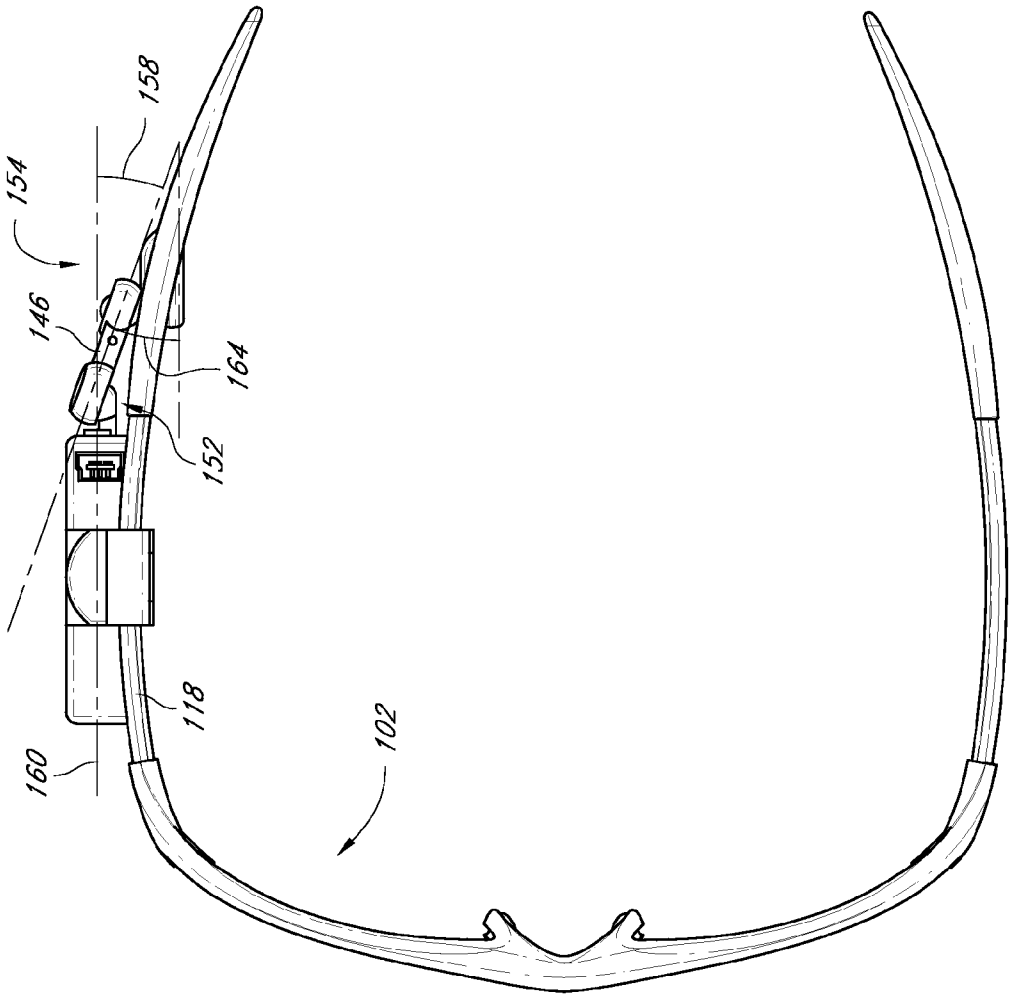

FIG. 4

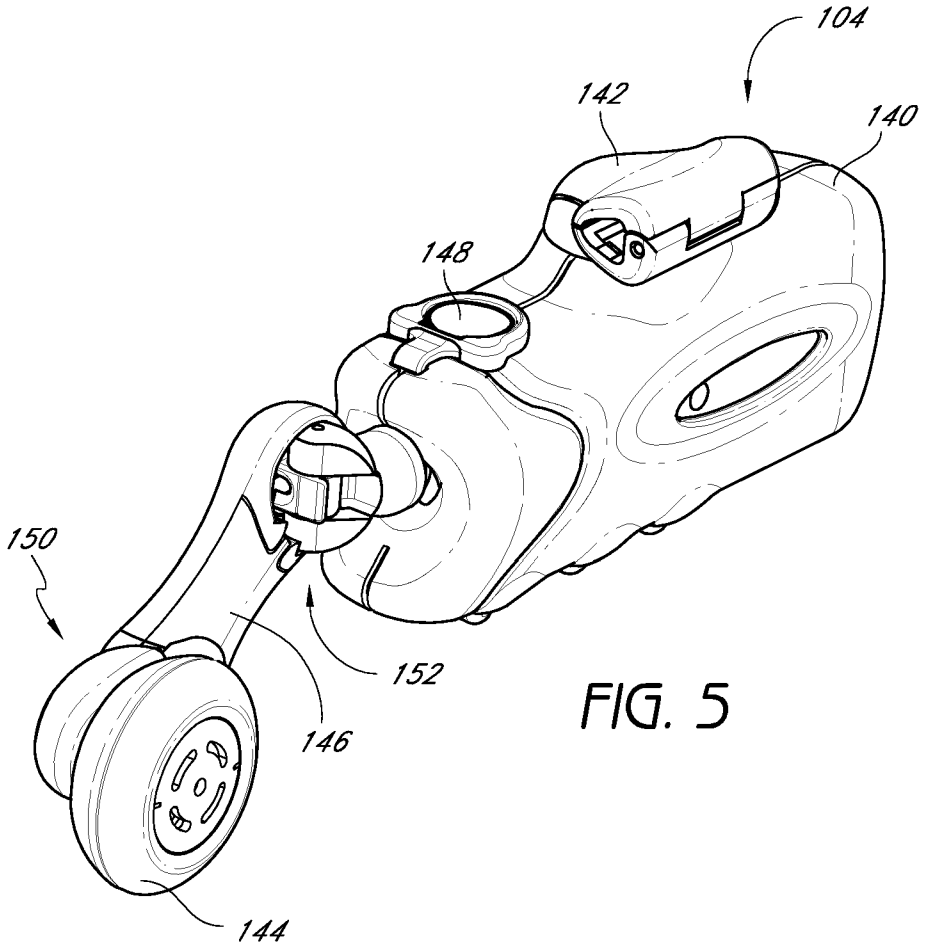

FIG. 5

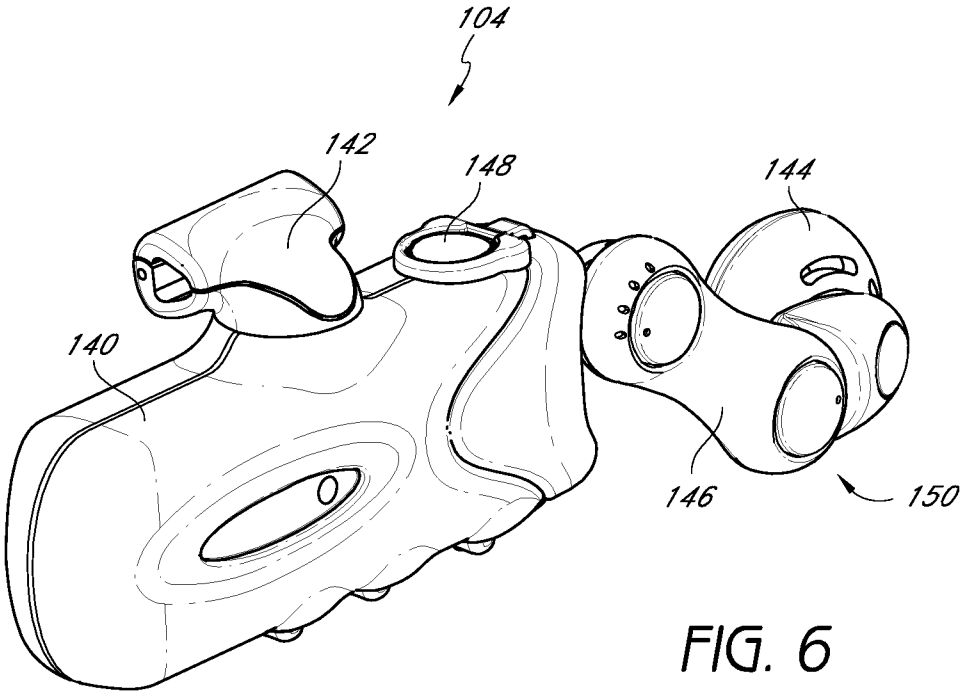

FIG. 6

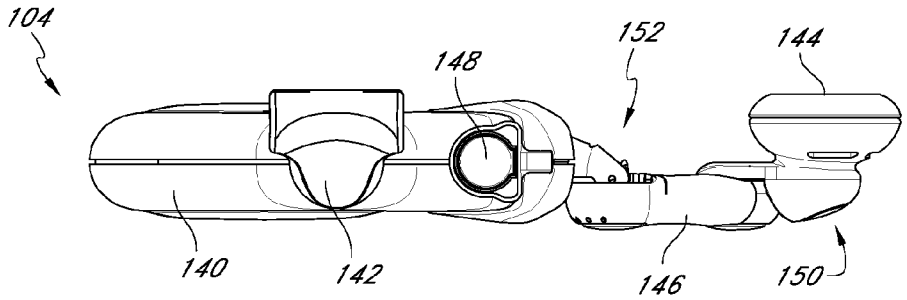

FIG. 7

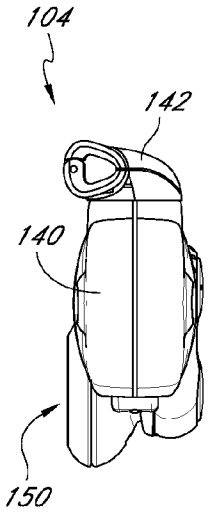

FIG. 9

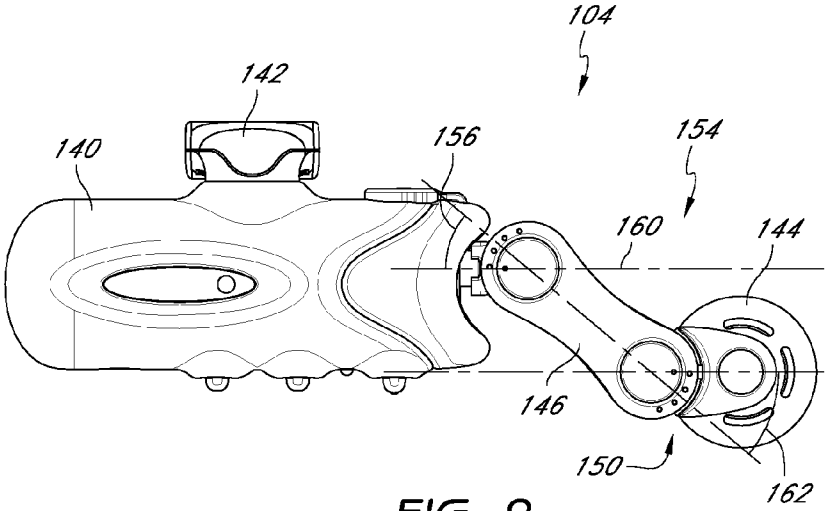

FIG. 8

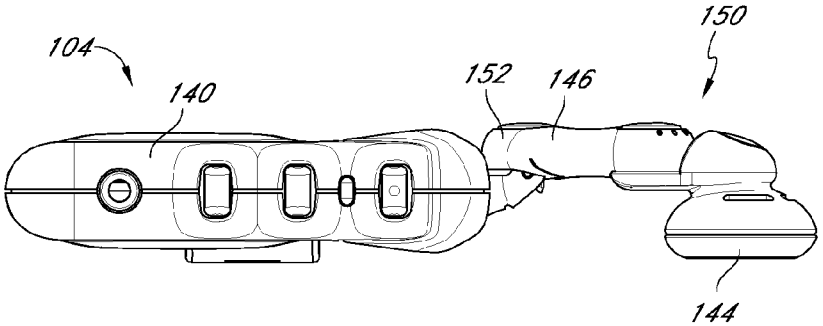

FIG. 10

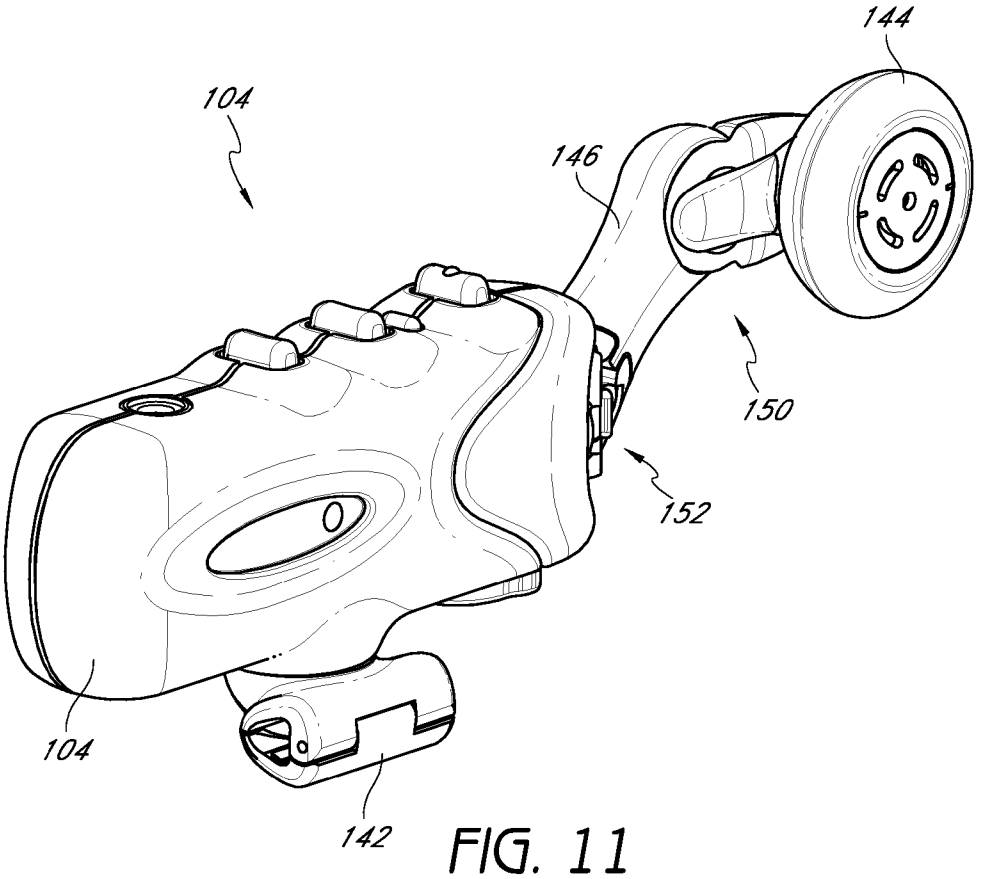

FIG. 11

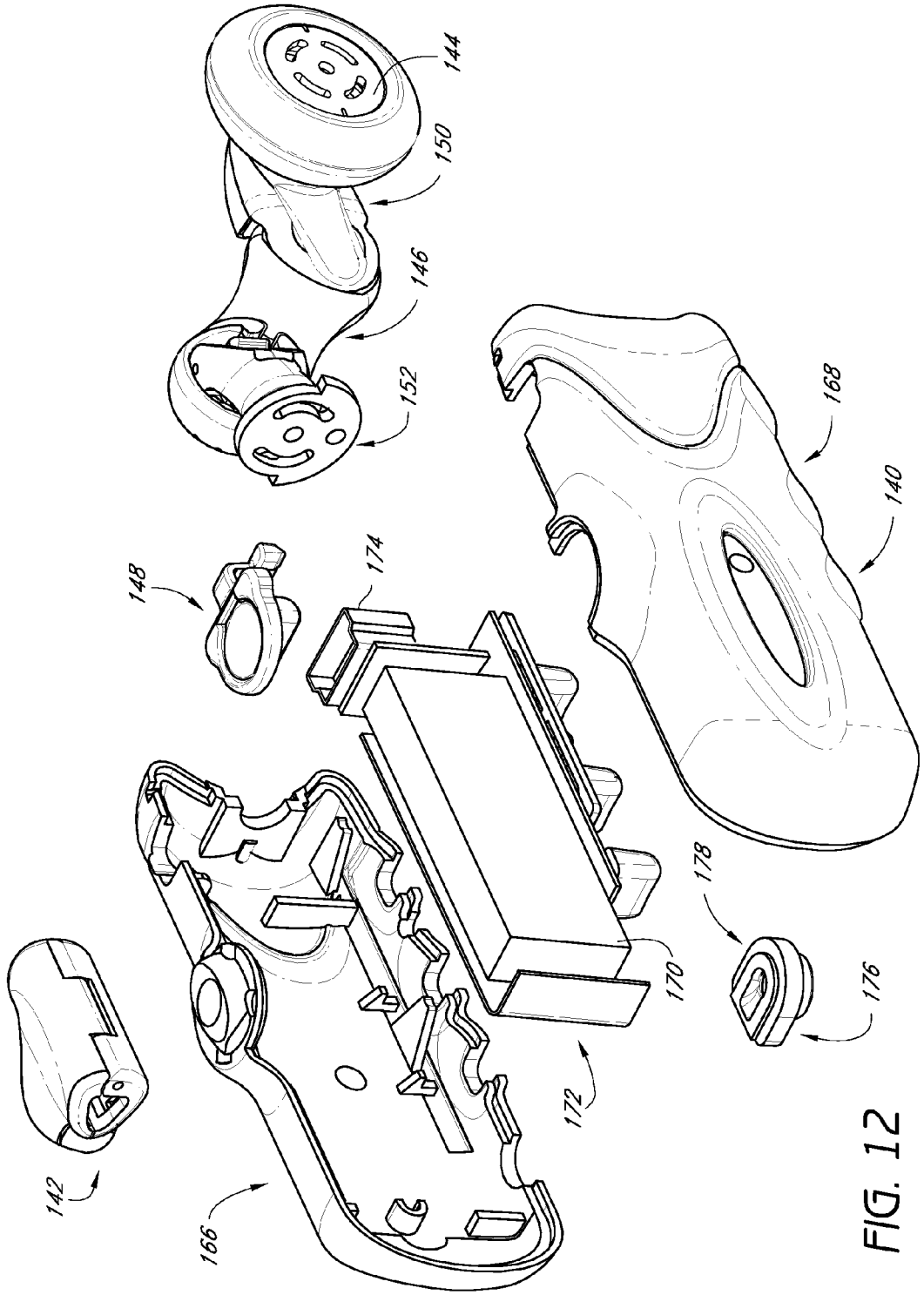

FIG. 12

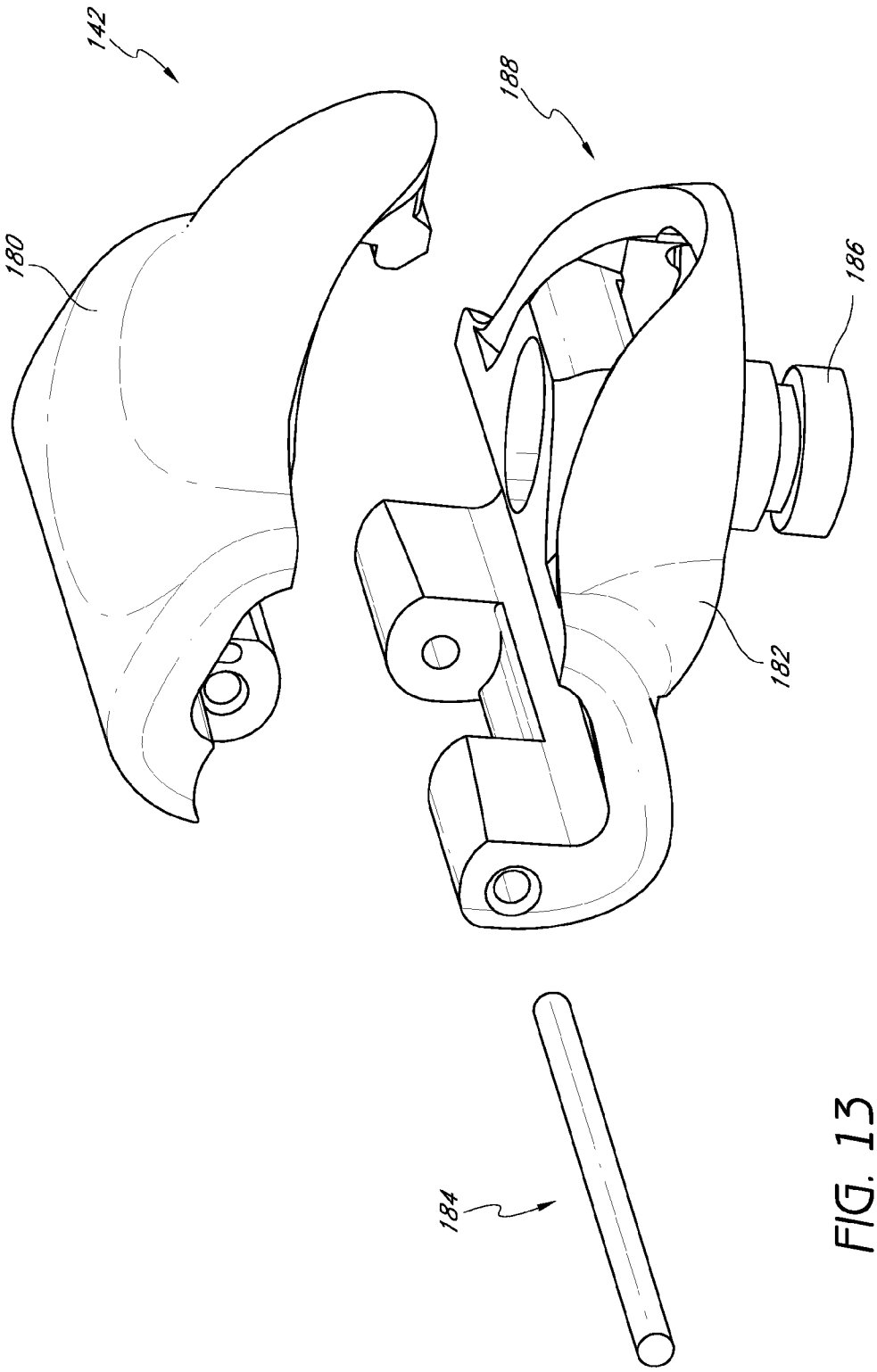

FIG. 13

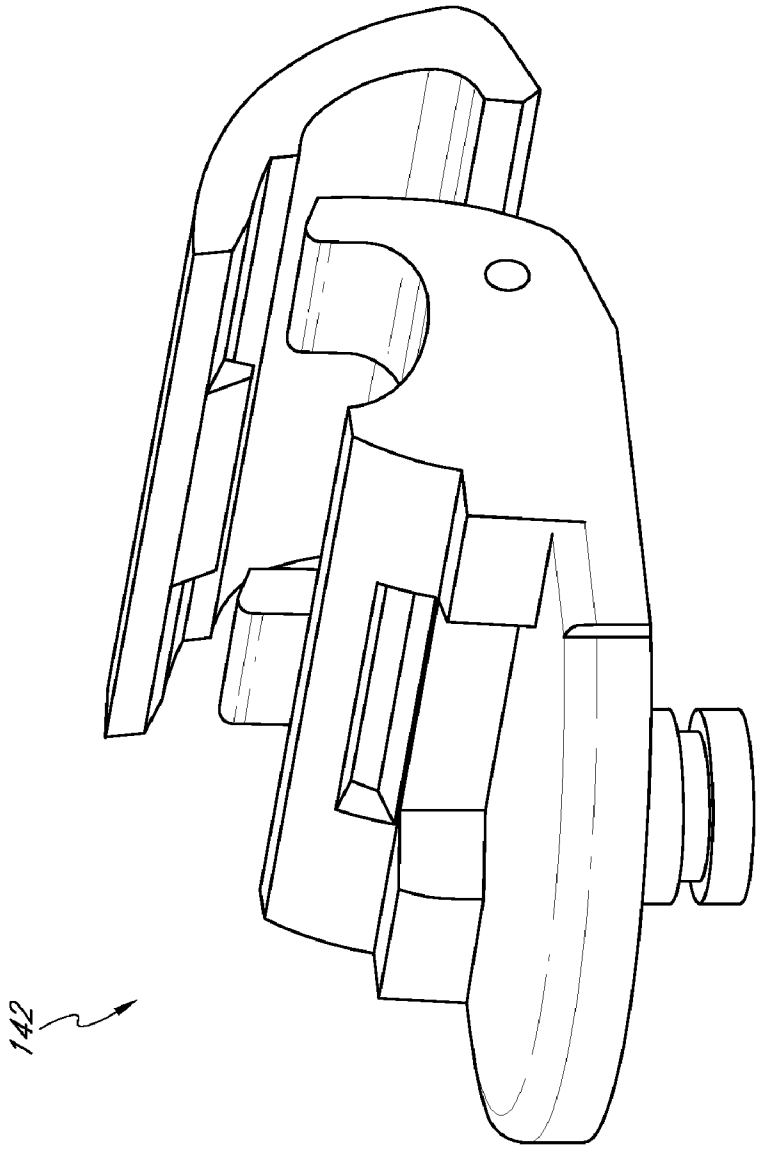

FIG. 14

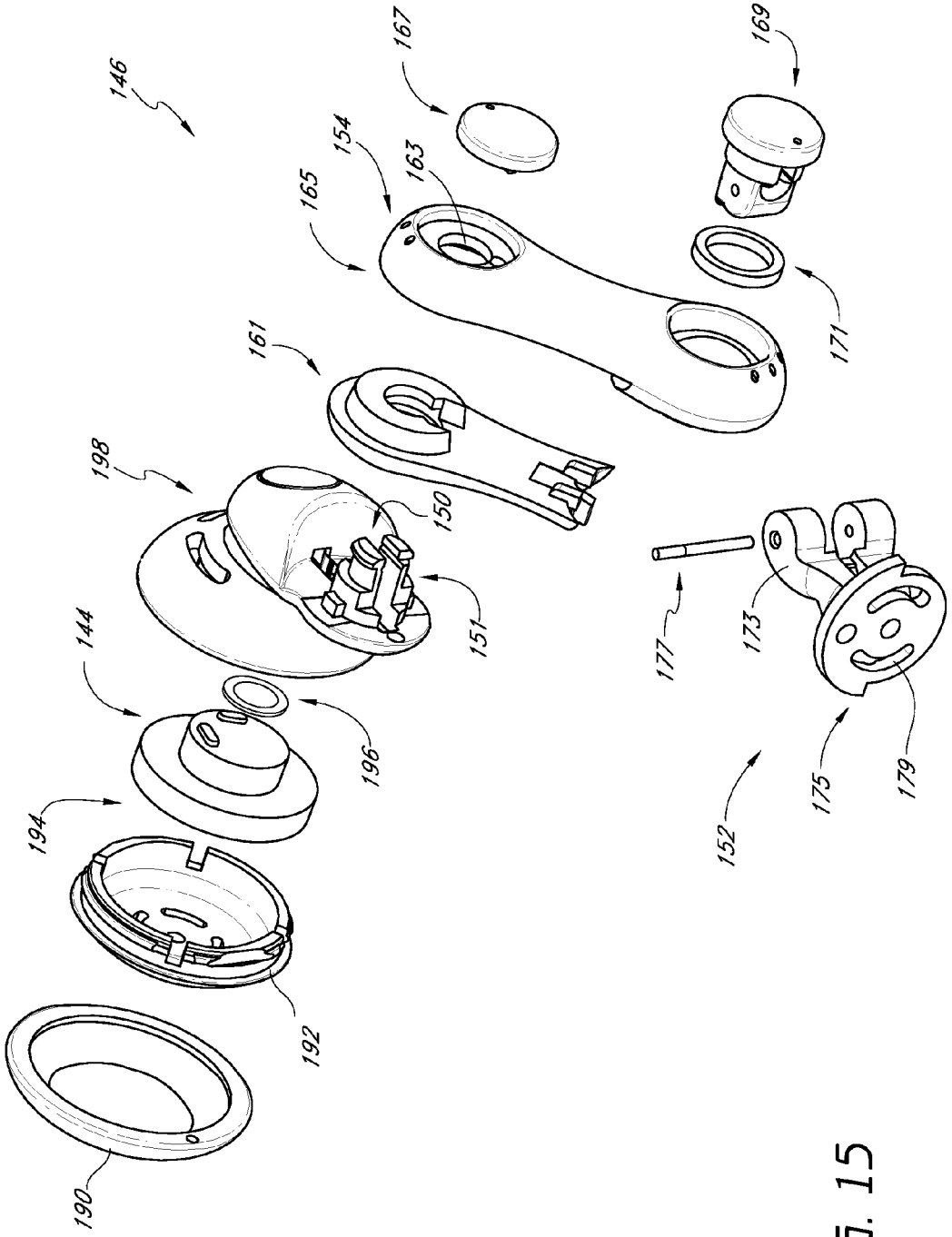
146
167
169
154
163
165
171
161
198
150
151
177
173
144
196
175
179
194
152
192
190

FIG. 15

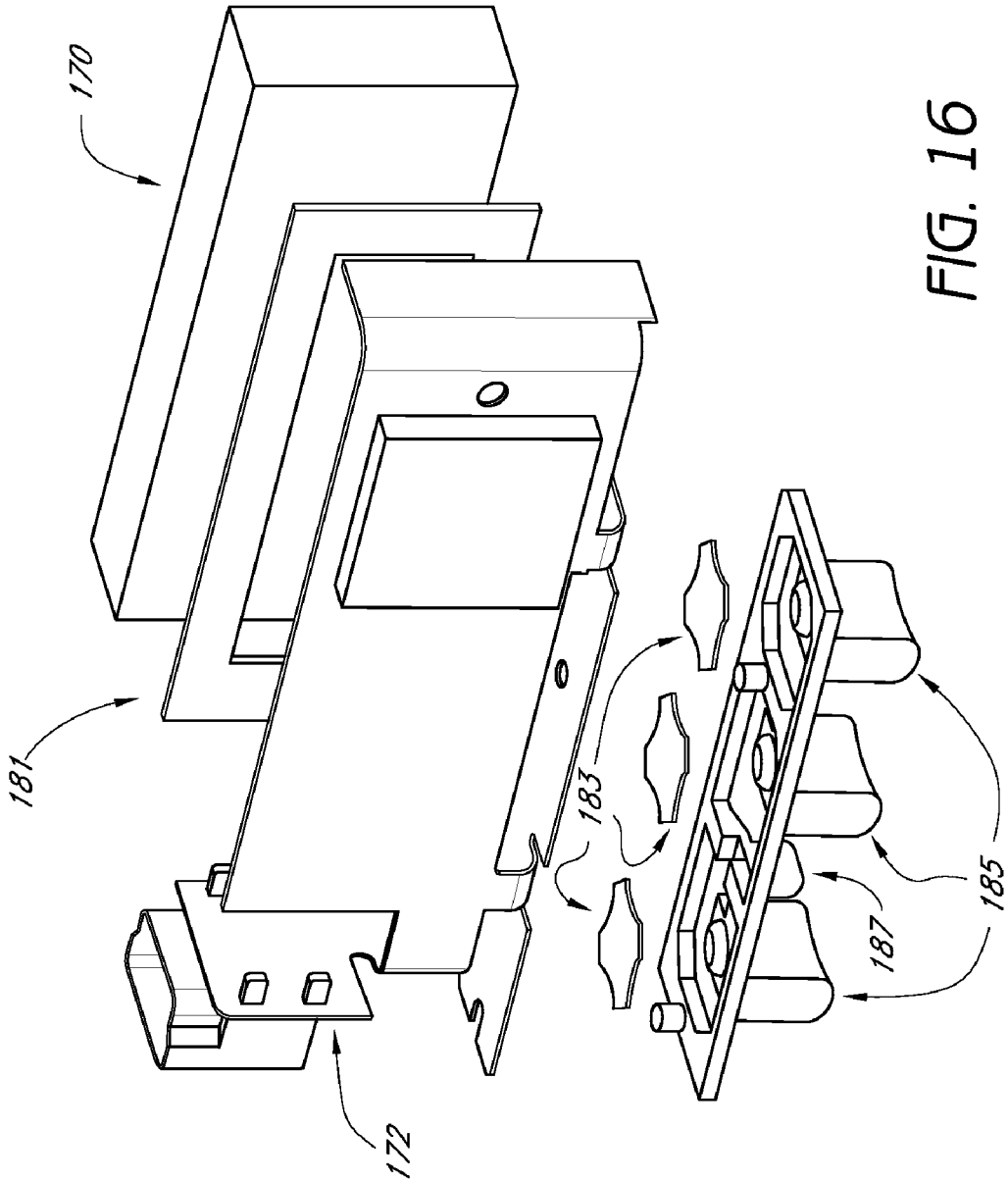

FIG. 16

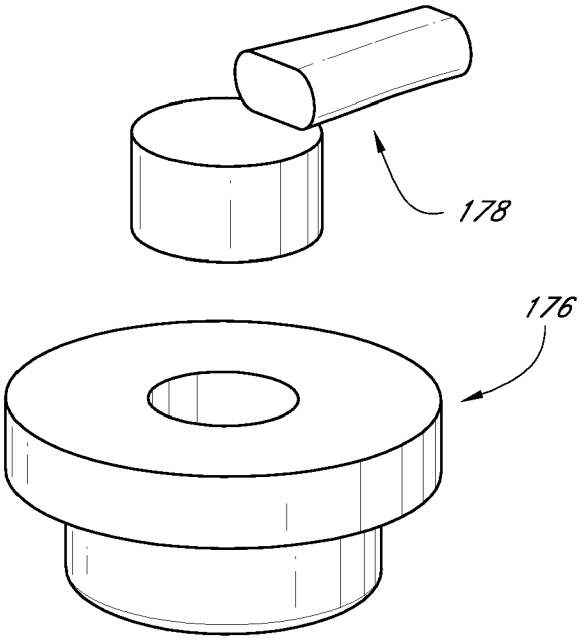

FIG. 17

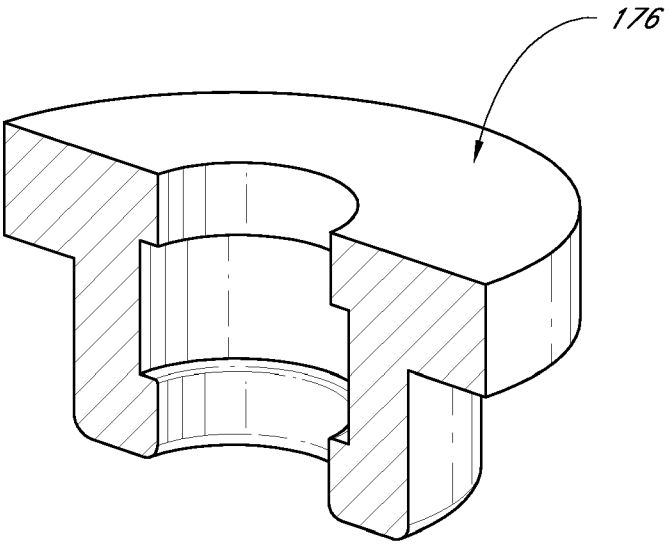

FIG. 18

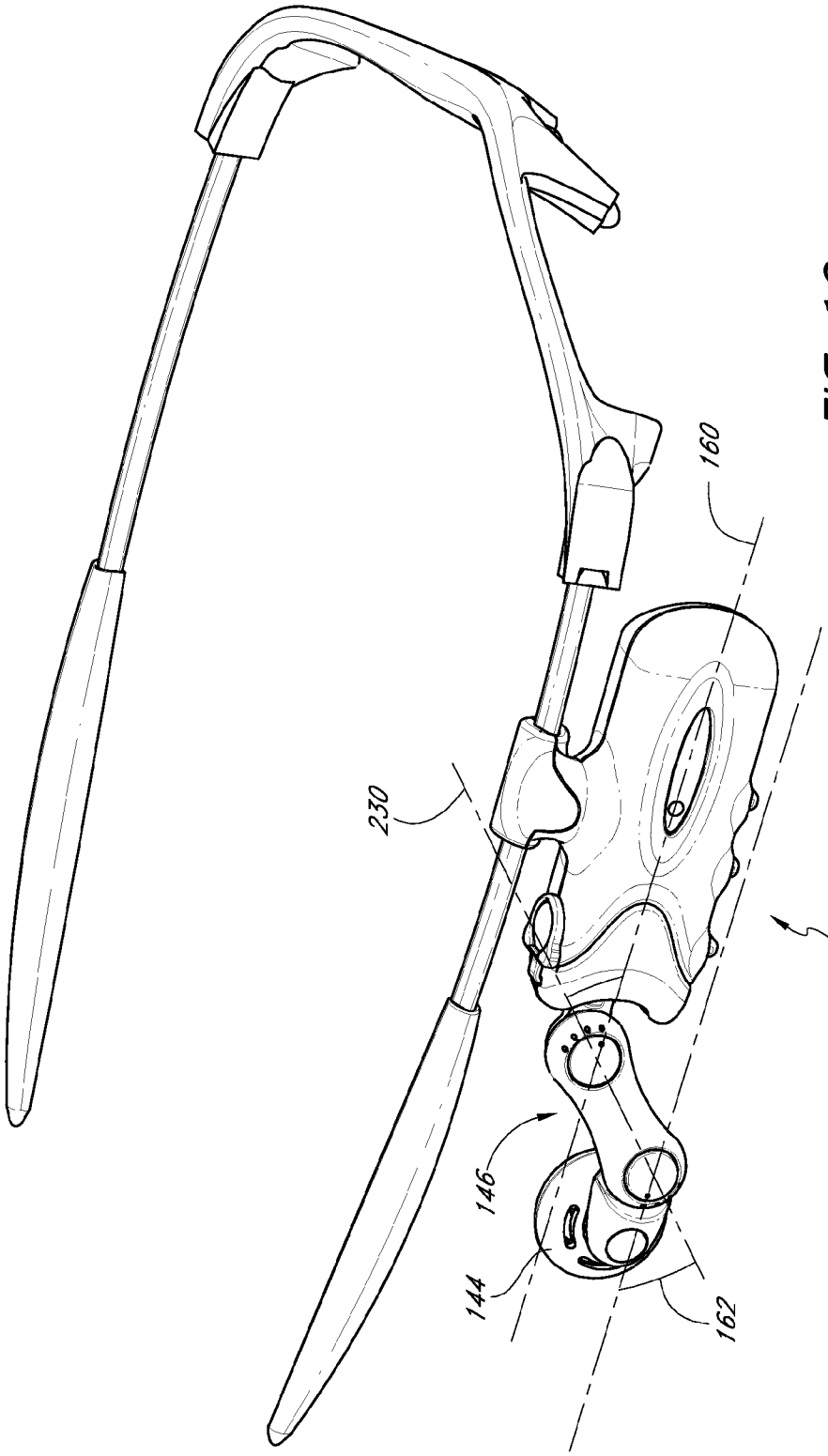

FIG. 19

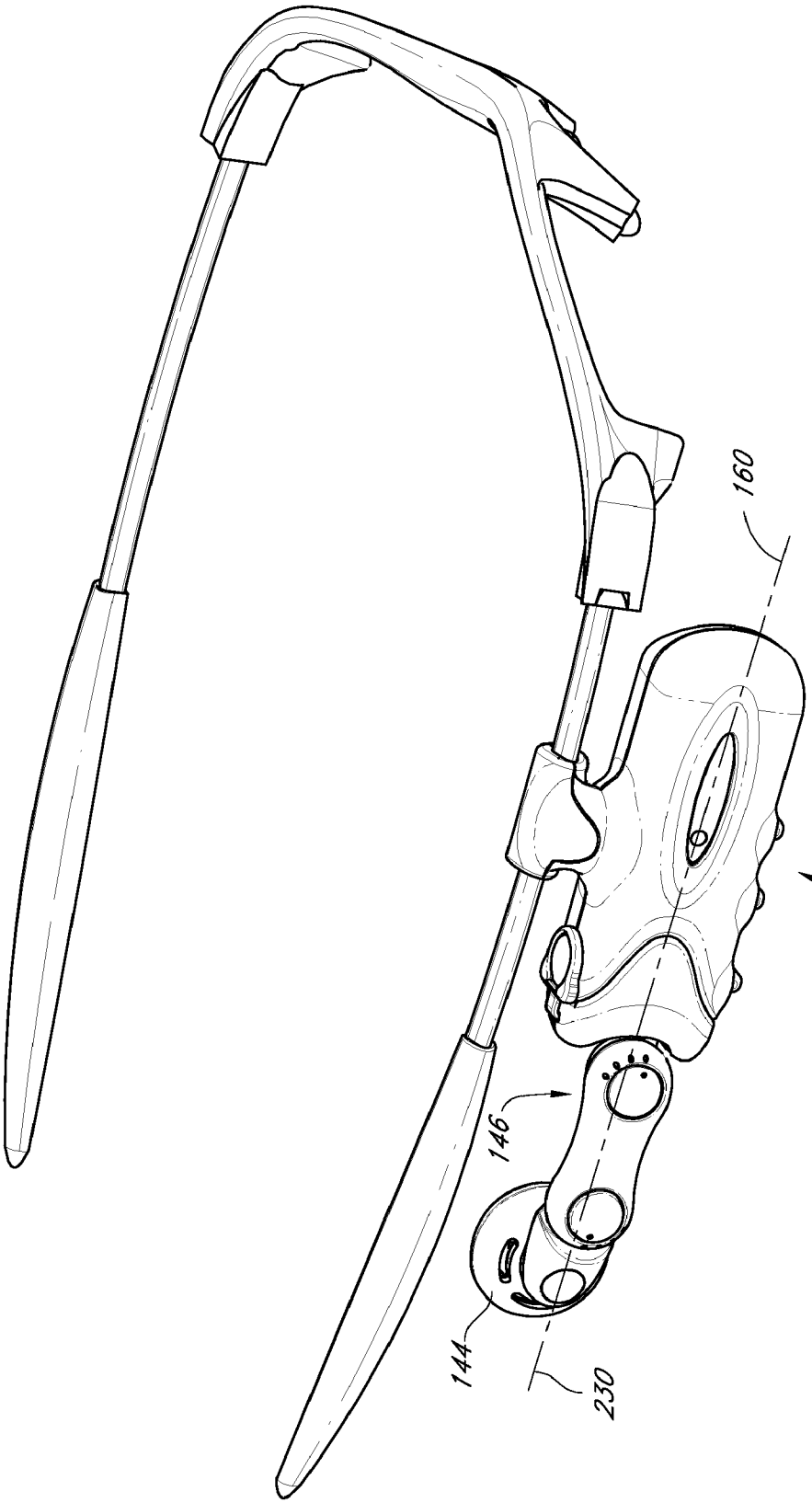

FIG. 20

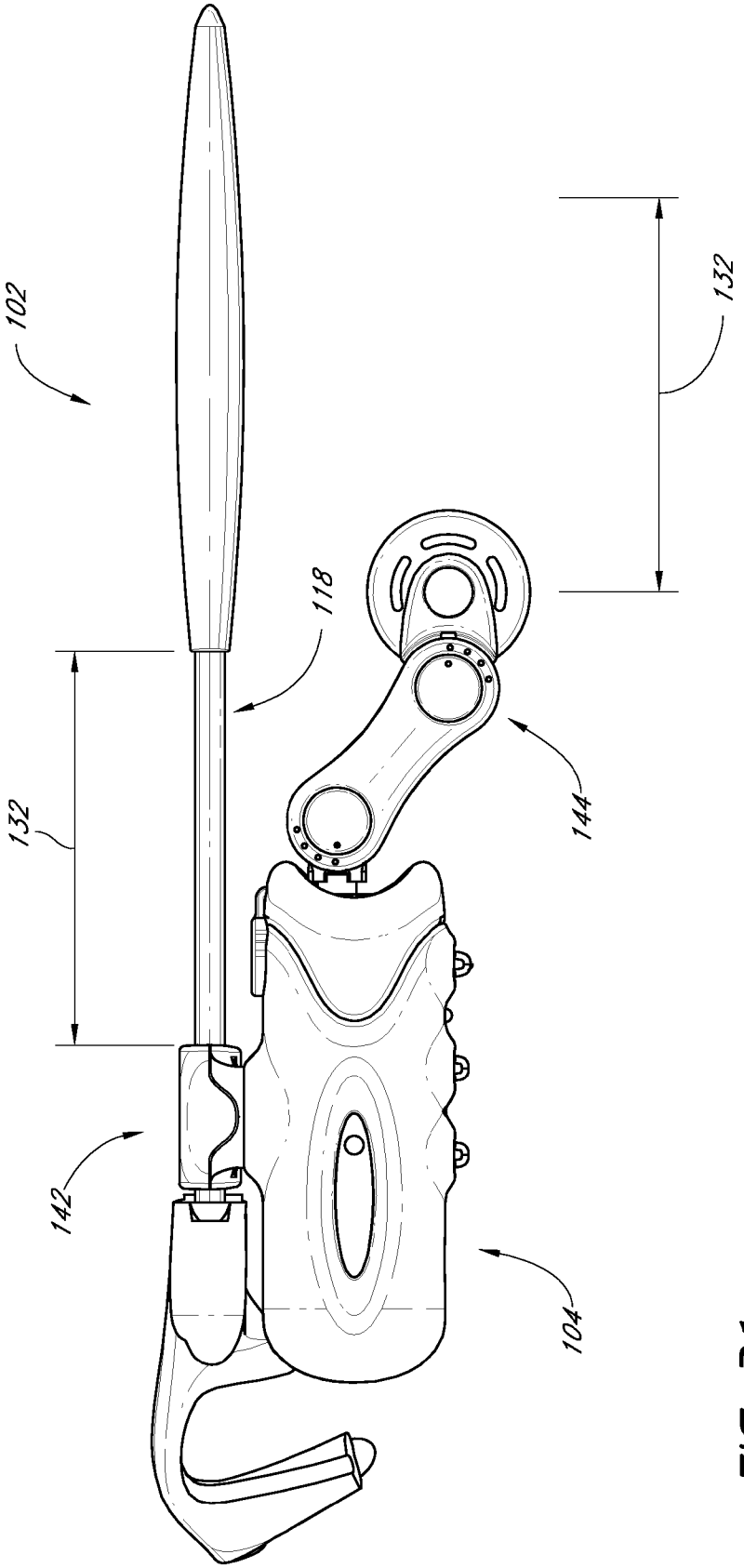

FIG. 21

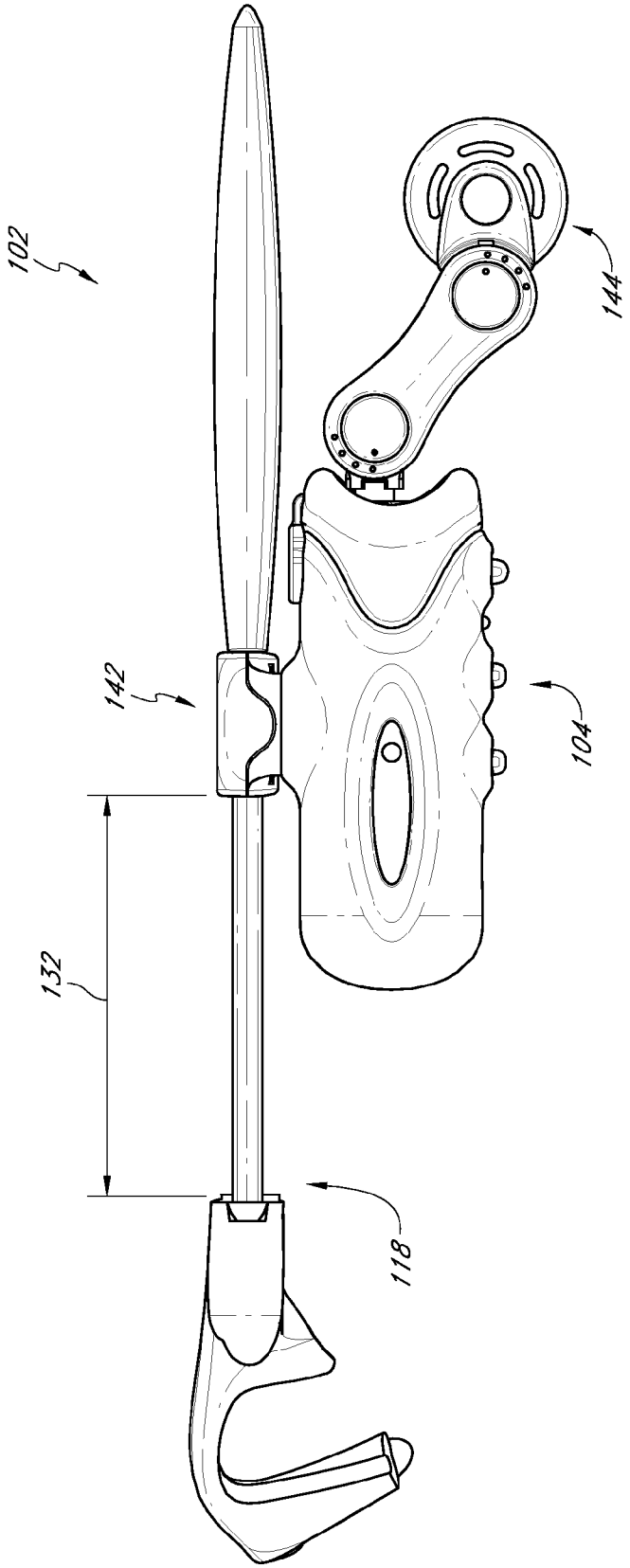

FIG. 22

FIG. 23

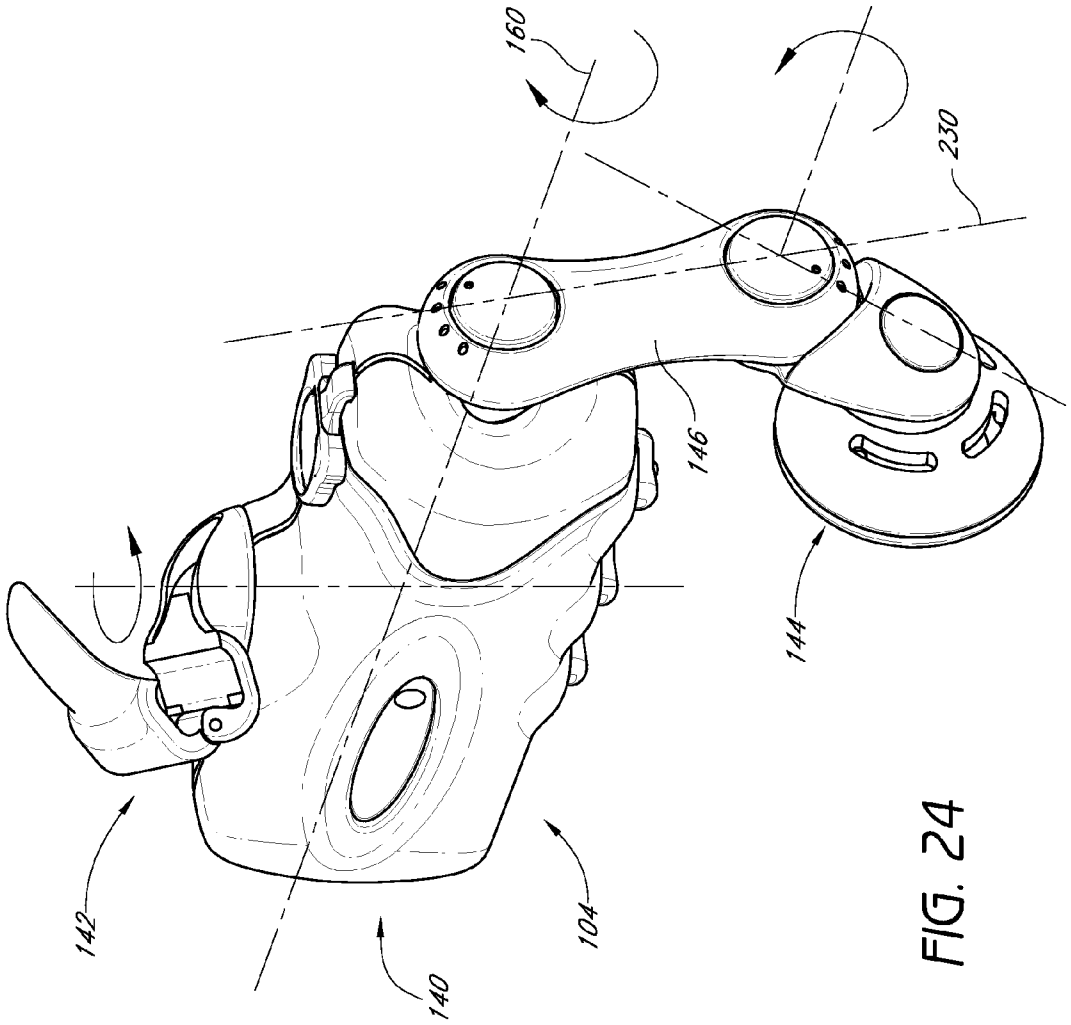

FIG. 24

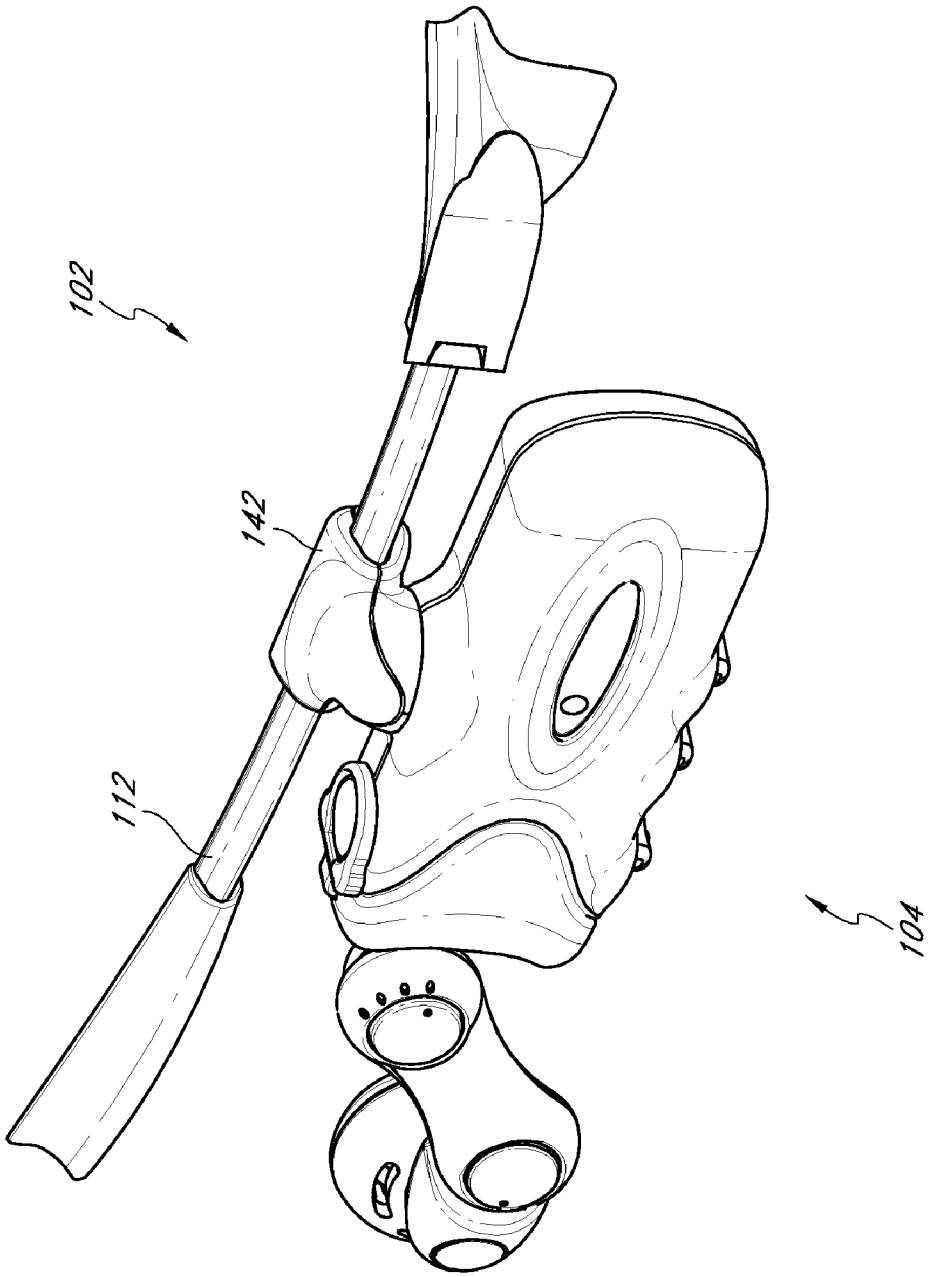

FIG. 25

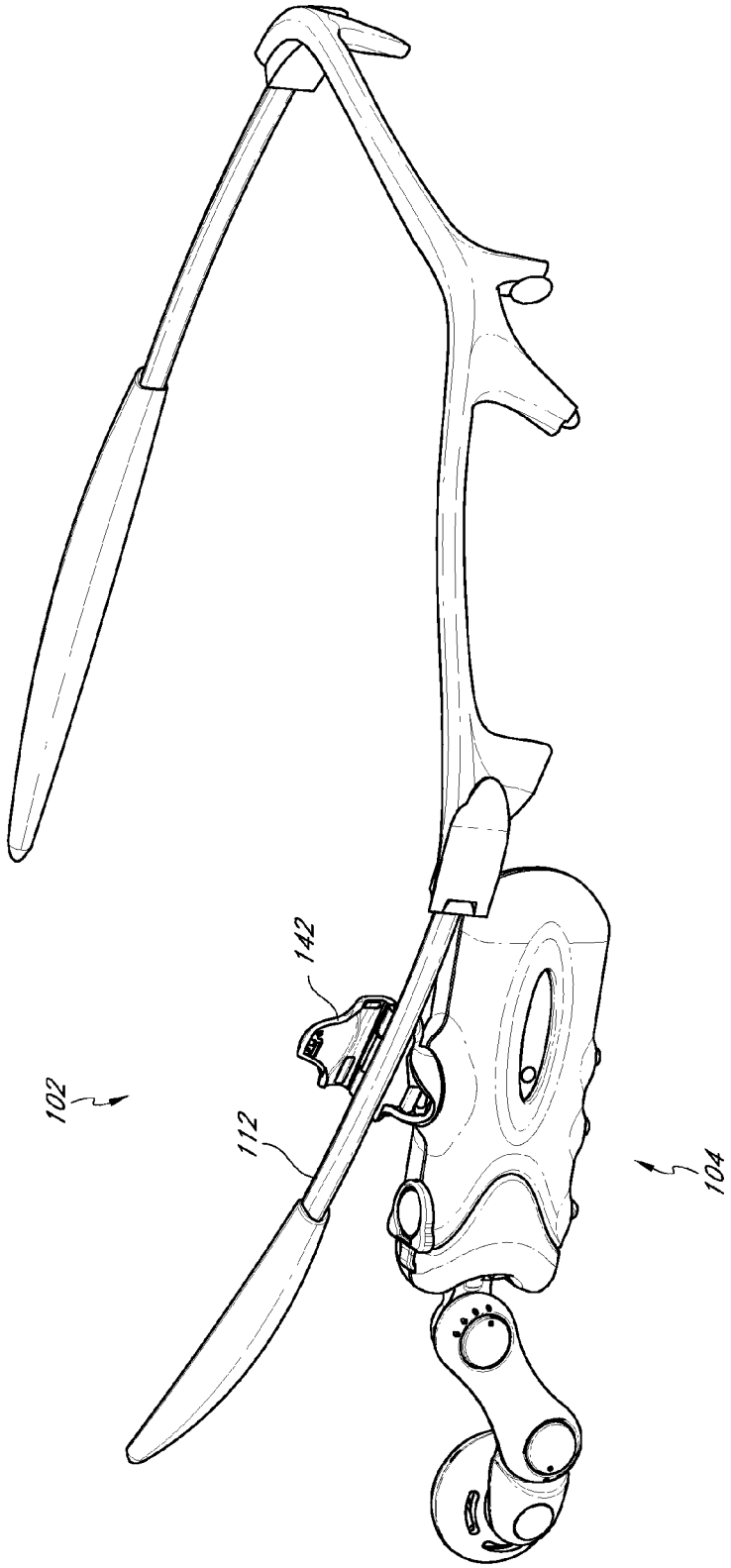

FIG. 26

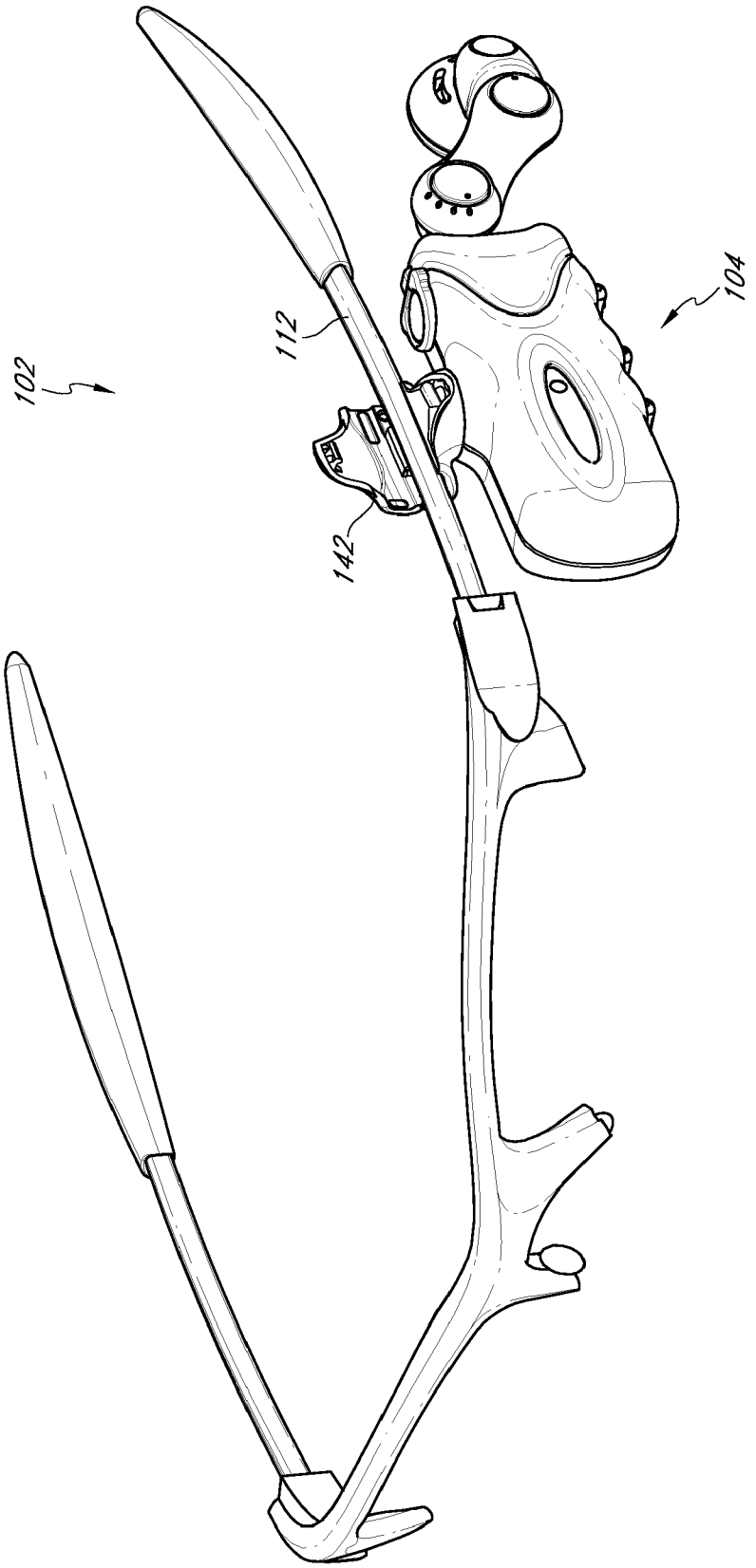

FIG. 27

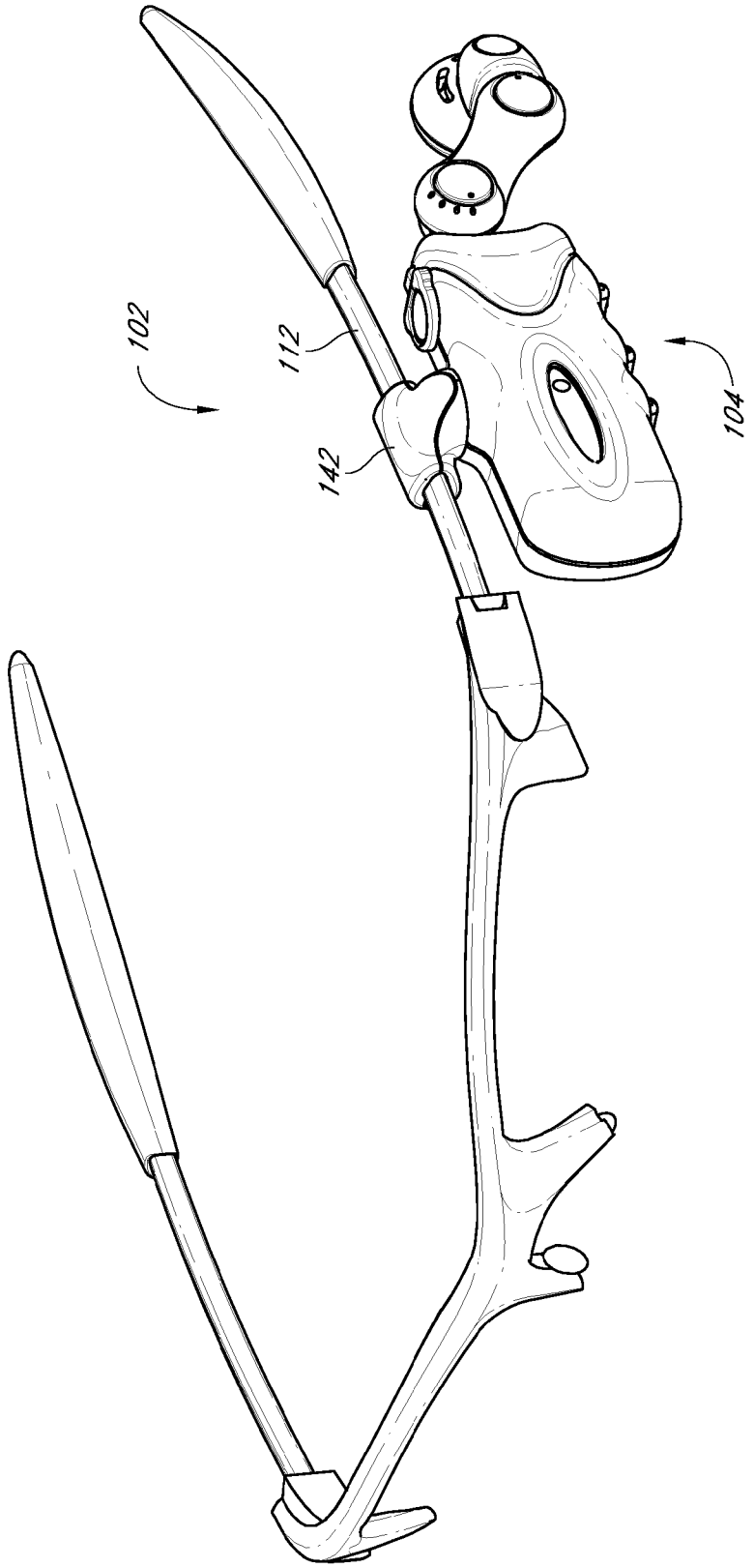

FIG. 28

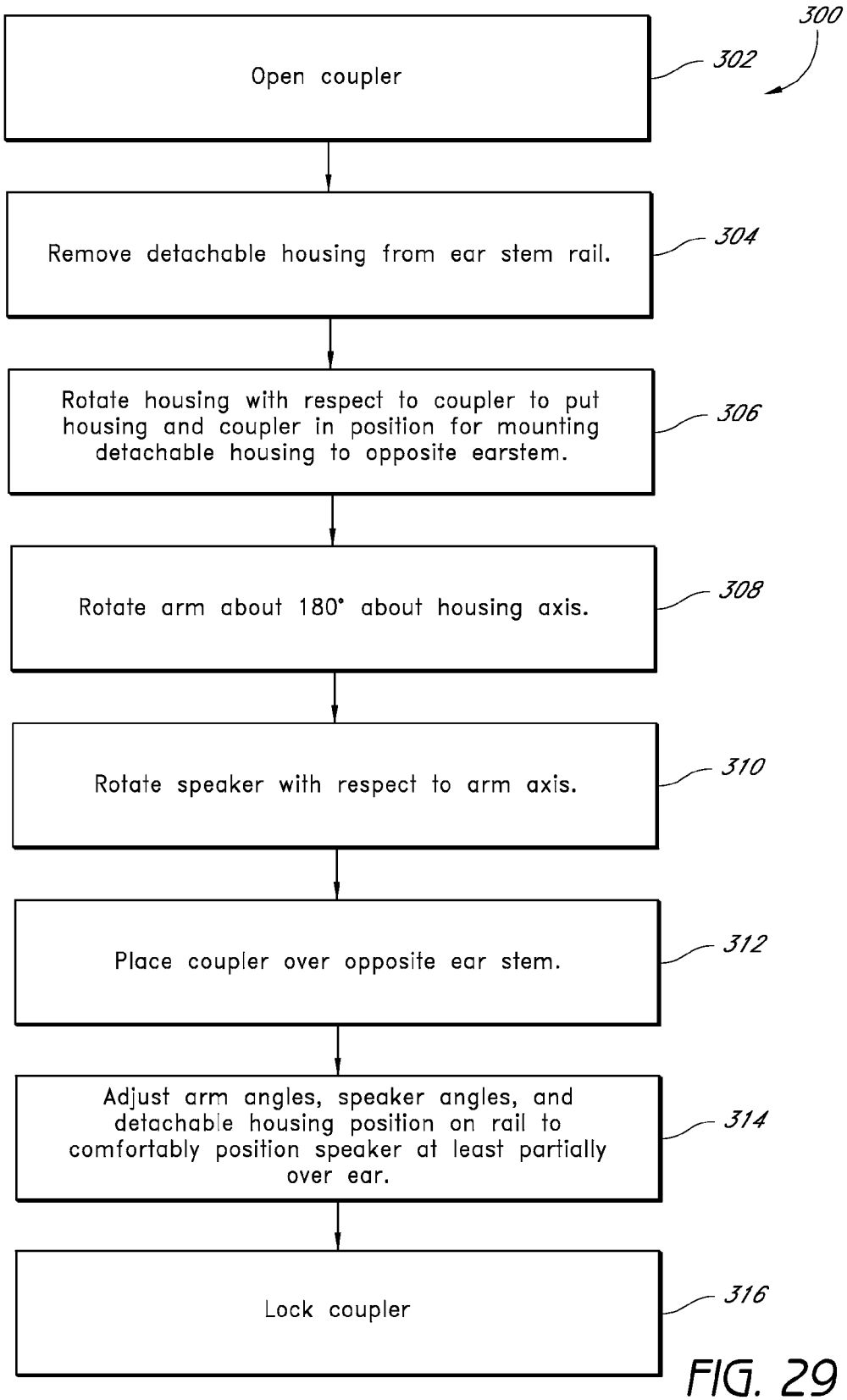
300
Open coupler
302
Remove detachable housing from ear stem rail.
304
Rotate housing with respect to coupler to put housing and coupler in position for mounting detachable housing to opposite earstem.
306
Rotate arm about 180° about housing axis.
308
Rotate speaker with respect to arm axis.
310
Place coupler over opposite ear stem.
312
Adjust arm angles, speaker angles, and detachable housing position on rail to comfortably position speaker at least partially over ear.
314
Lock coupler
316

FIG. 29

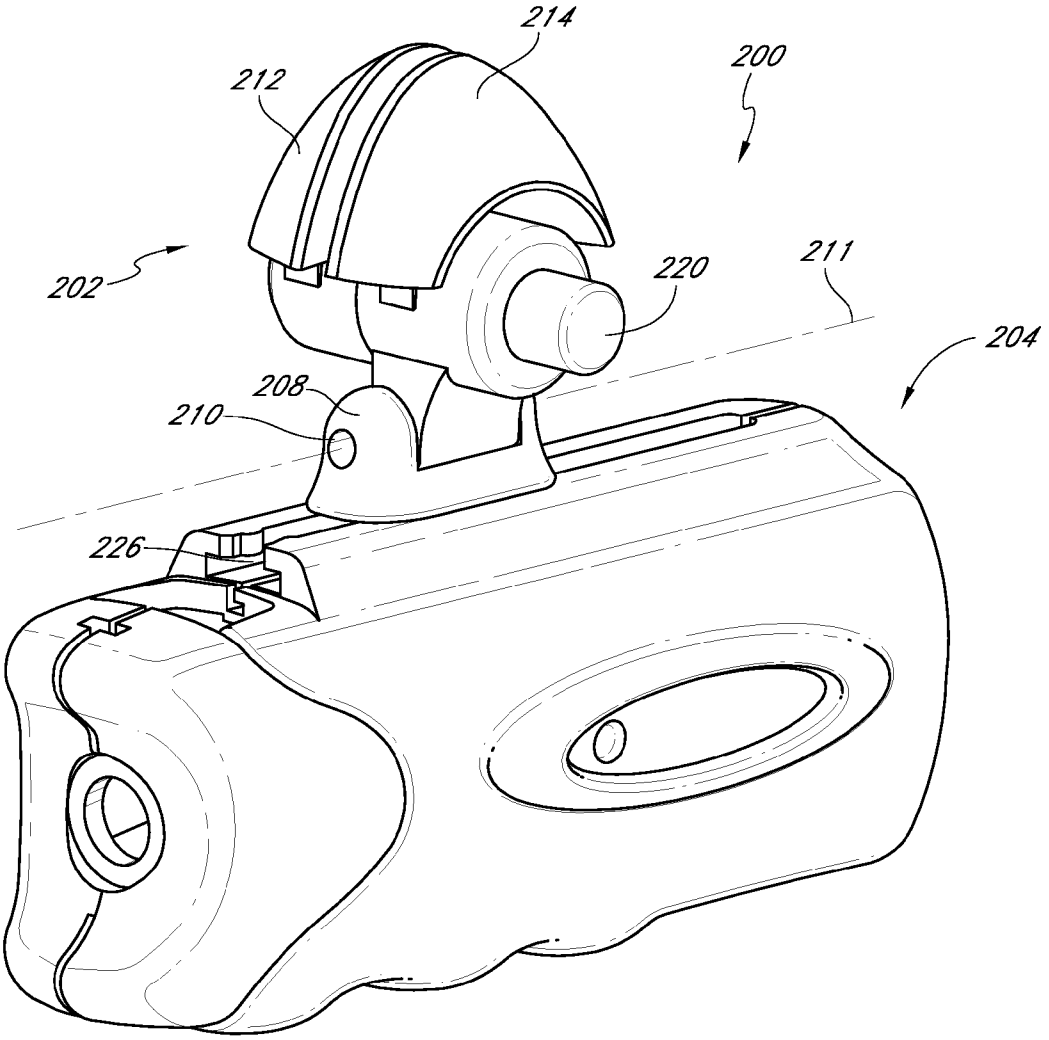

FIG. 30

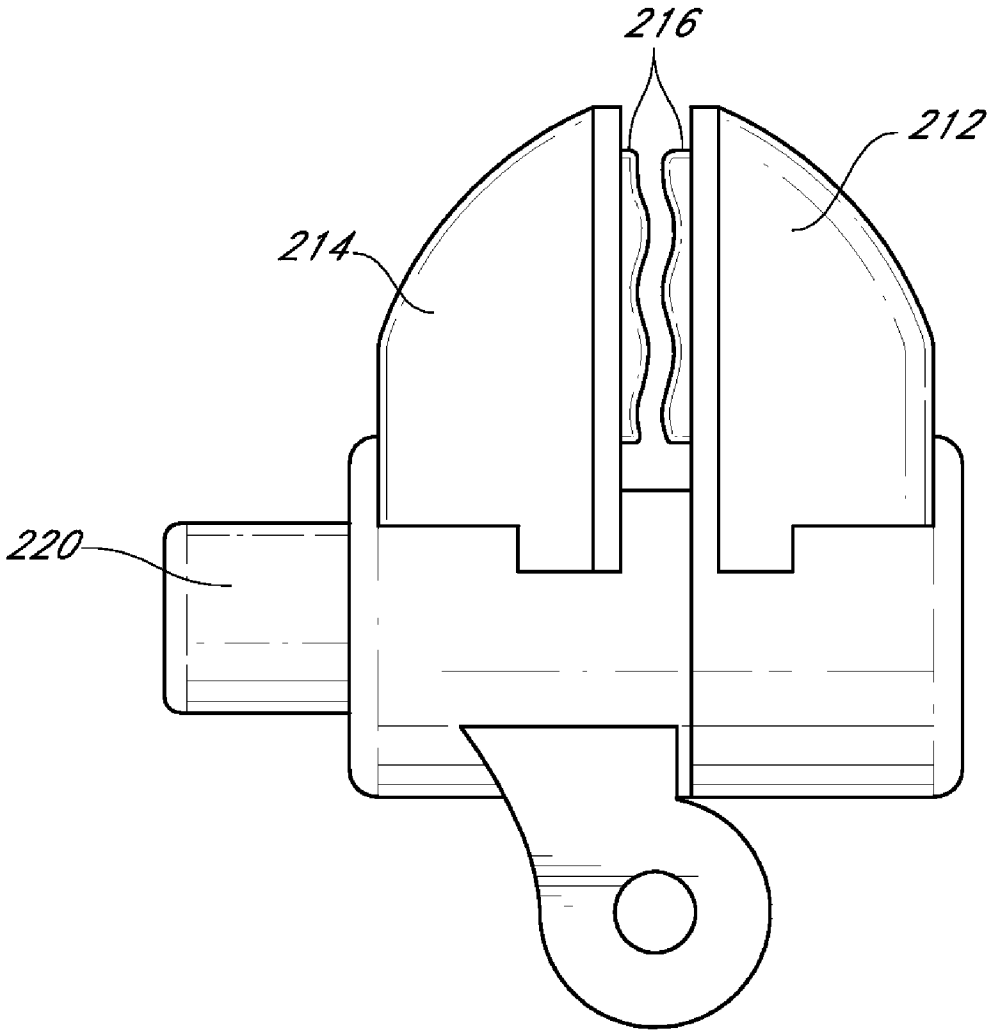

FIG. 31

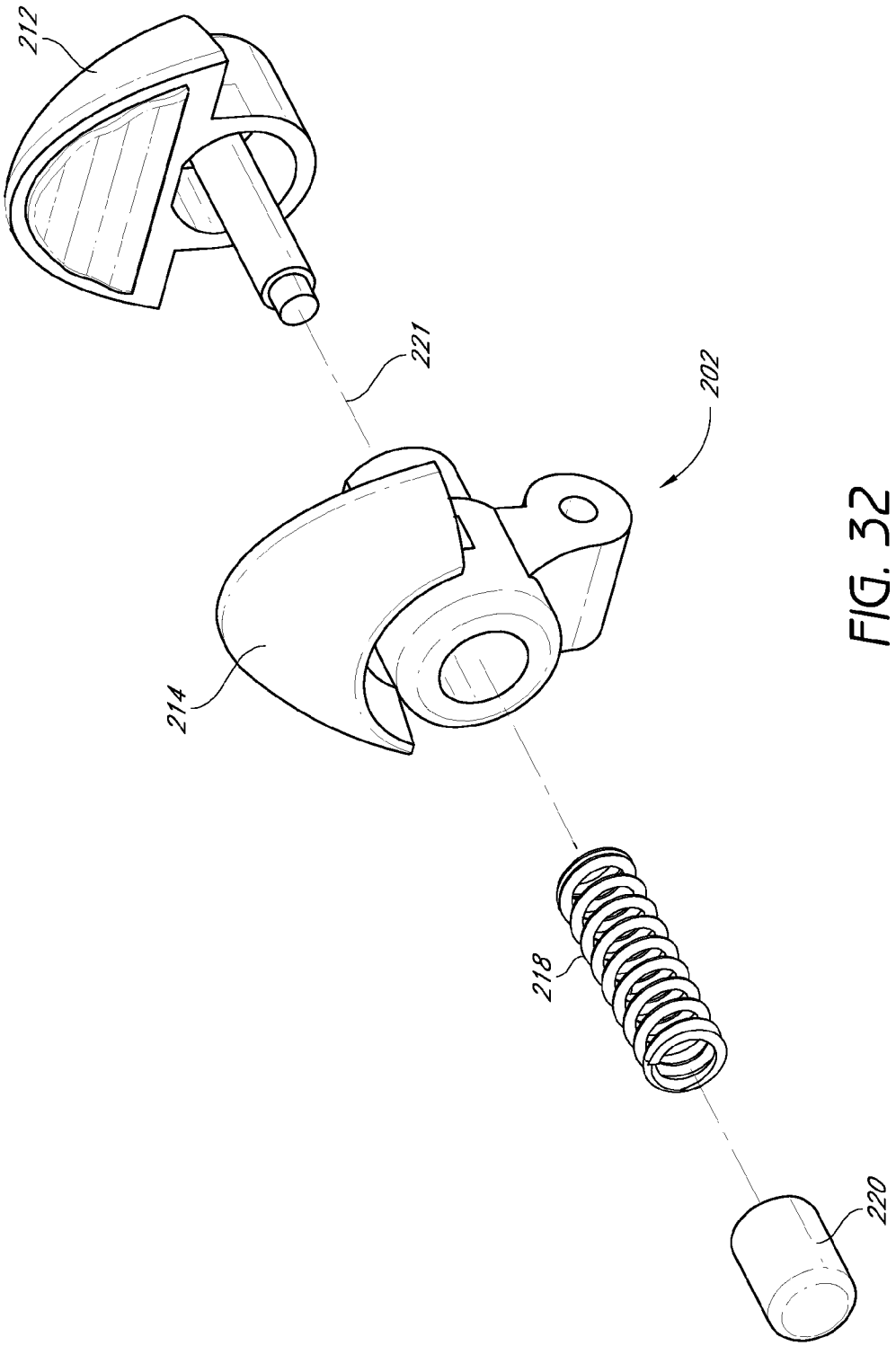

FIG. 32

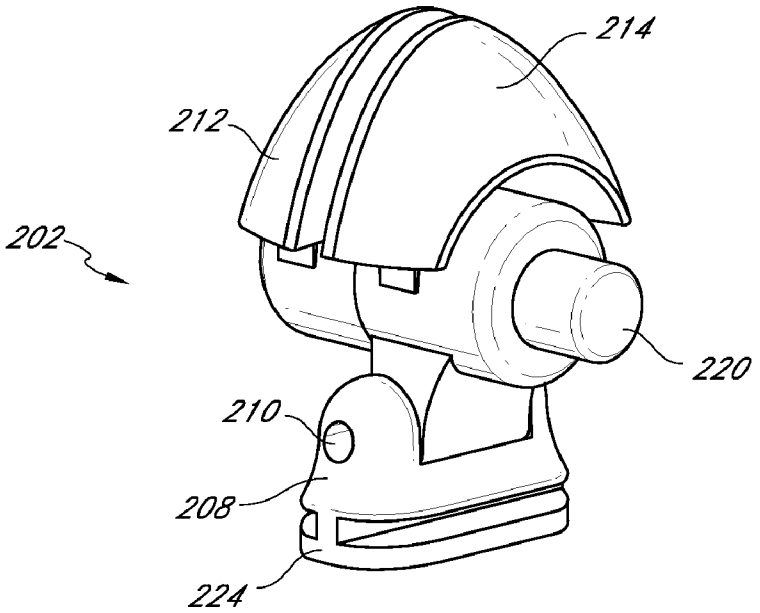

FIG. 33A

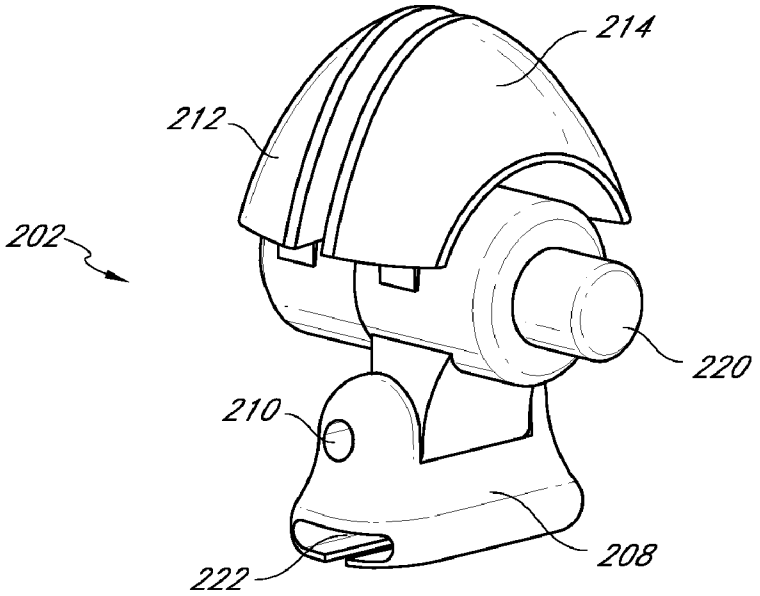

FIG. 33B

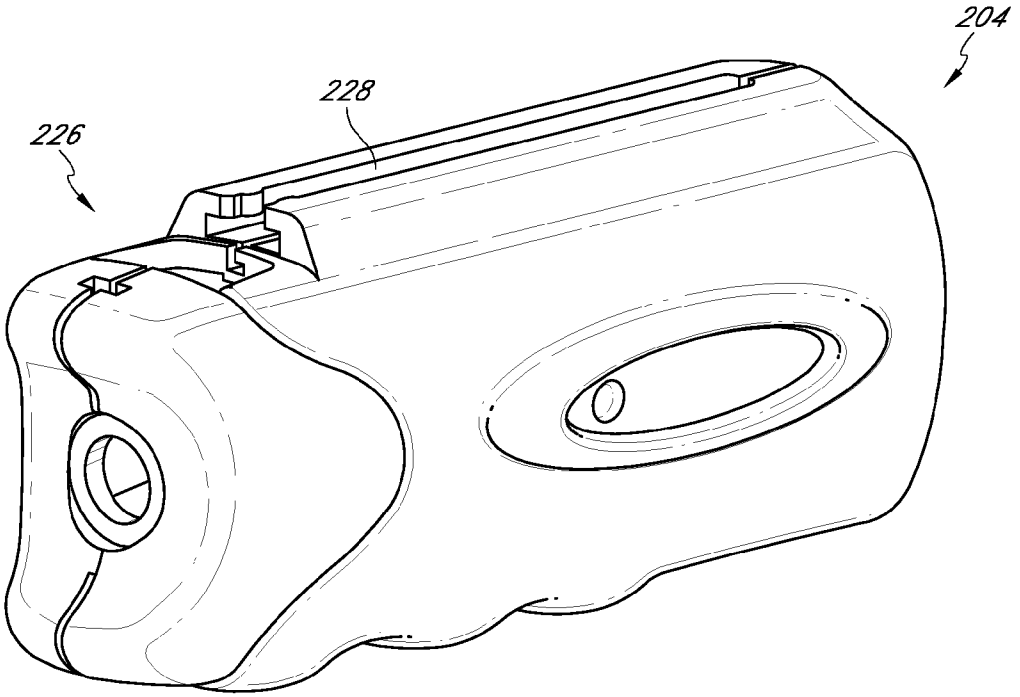

FIG. 34A

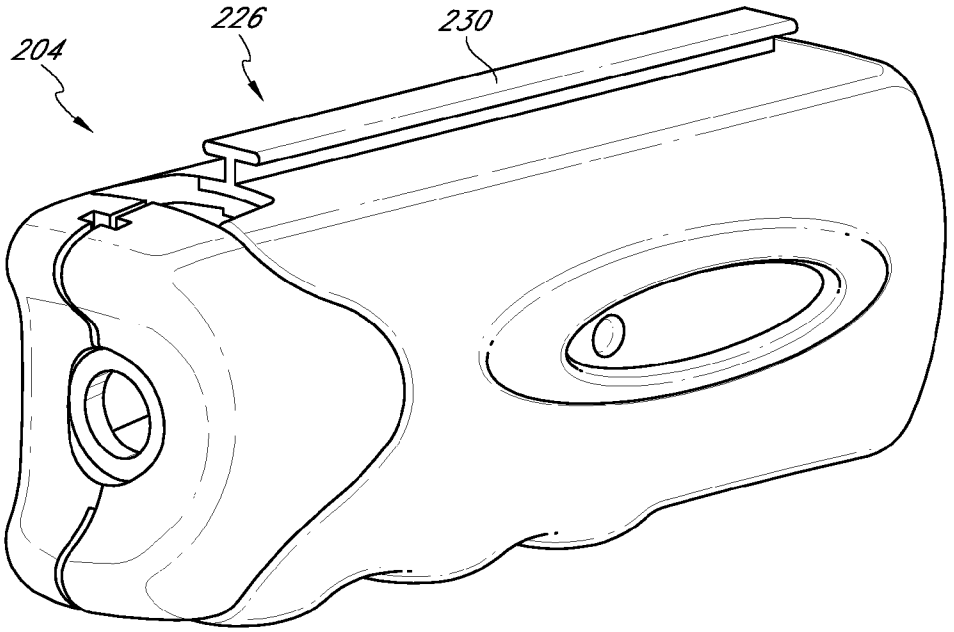

FIG. 34B

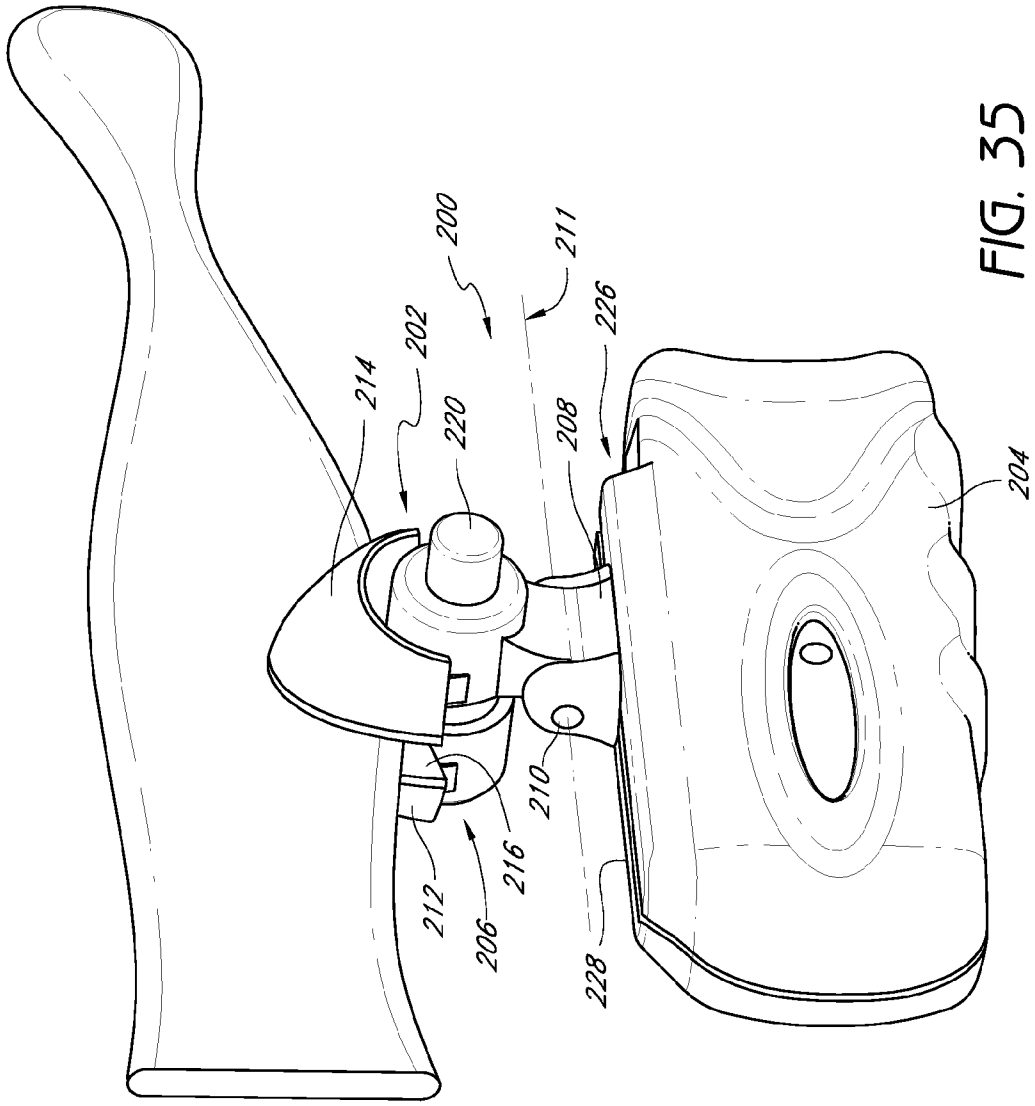

FIG. 35

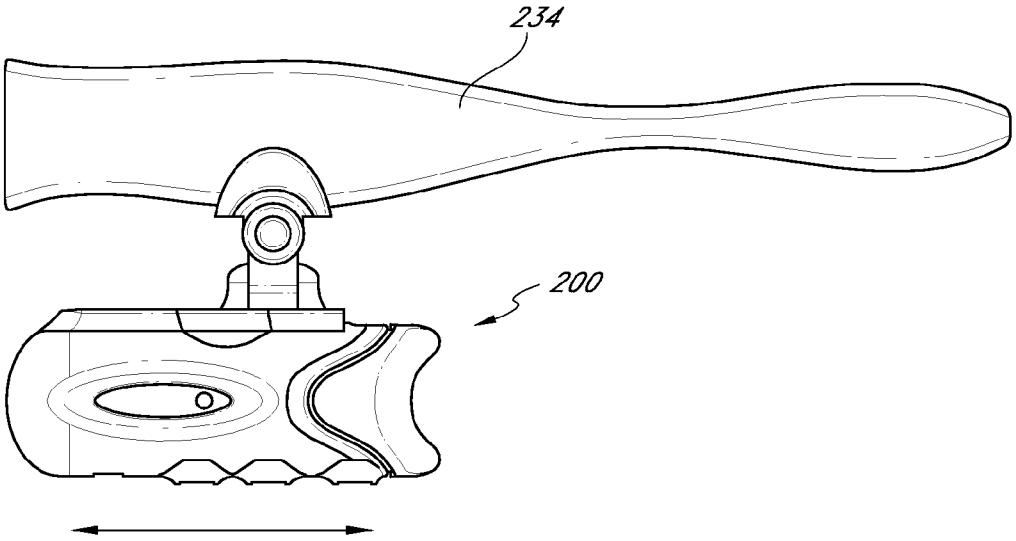

FIG. 36A

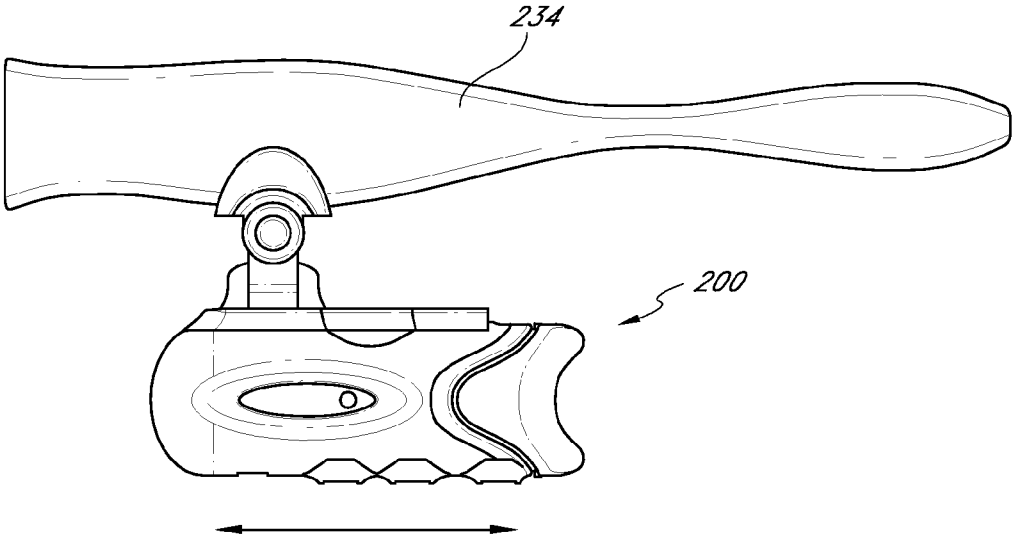

FIG. 36B

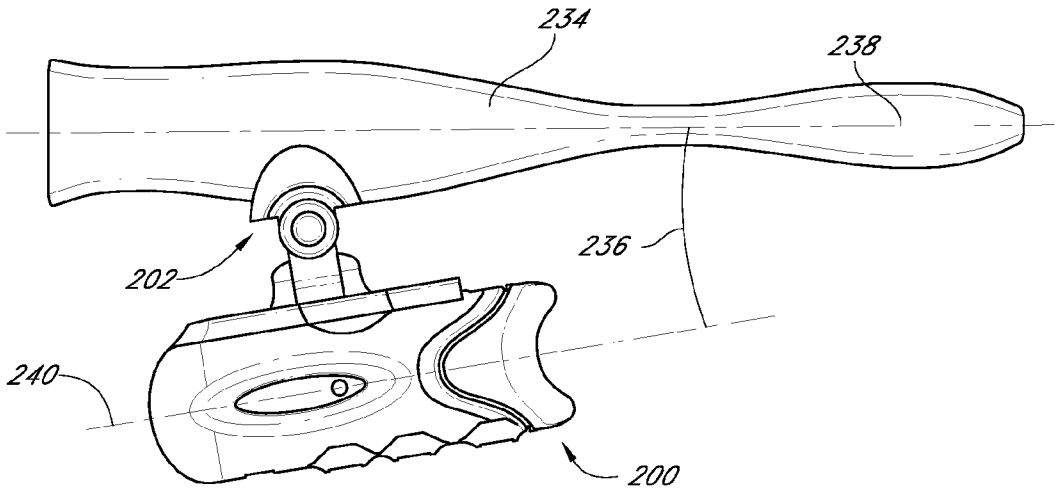

FIG. 37A

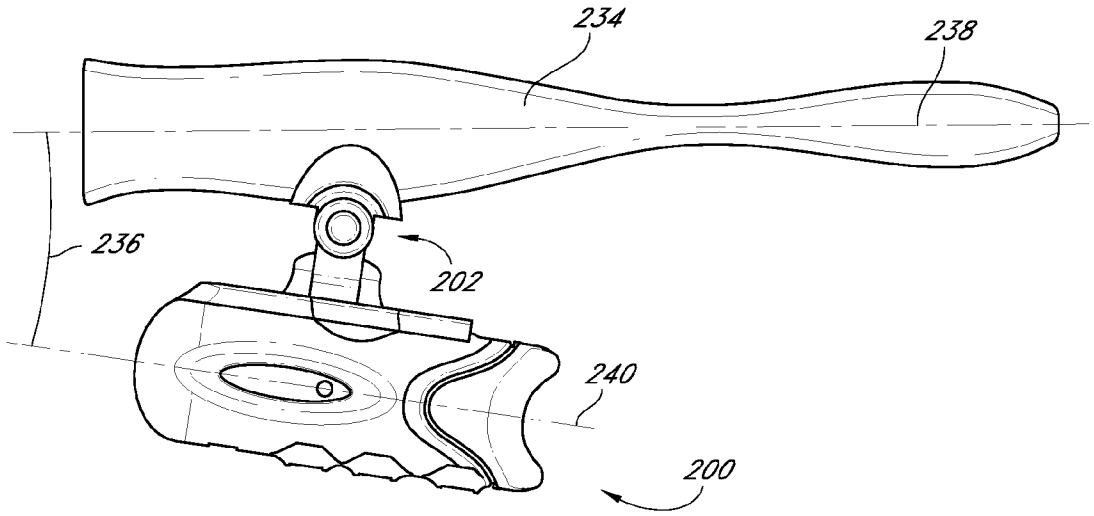

FIG. 37B

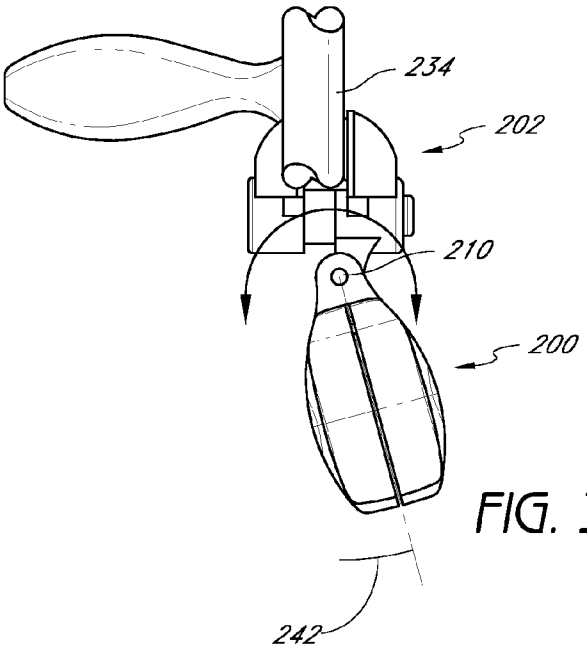

FIG. 38A

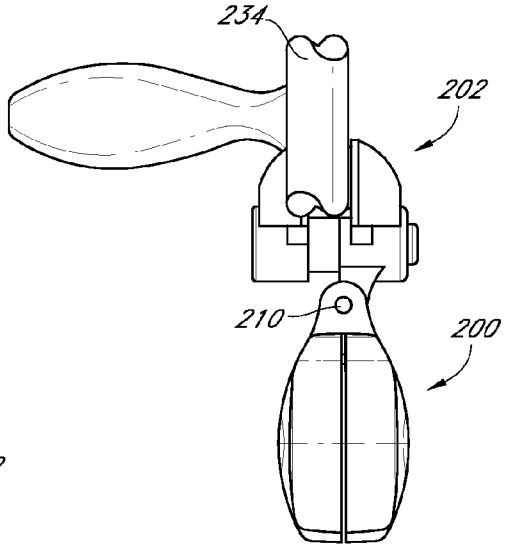

FIG. 38B

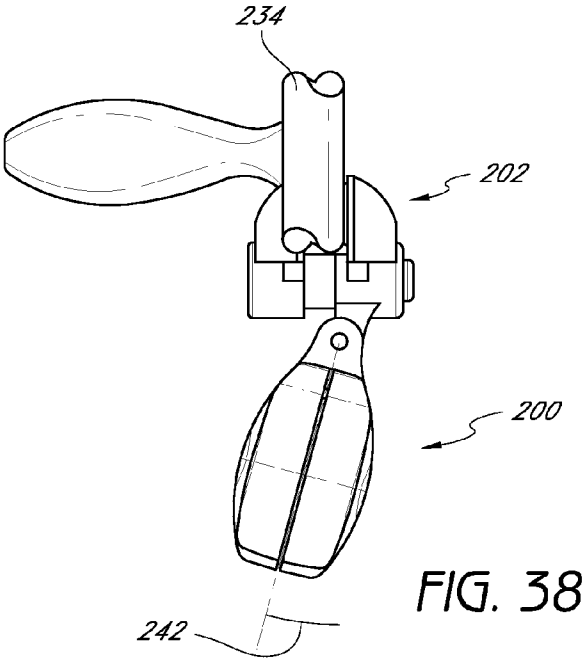

FIG. 38C

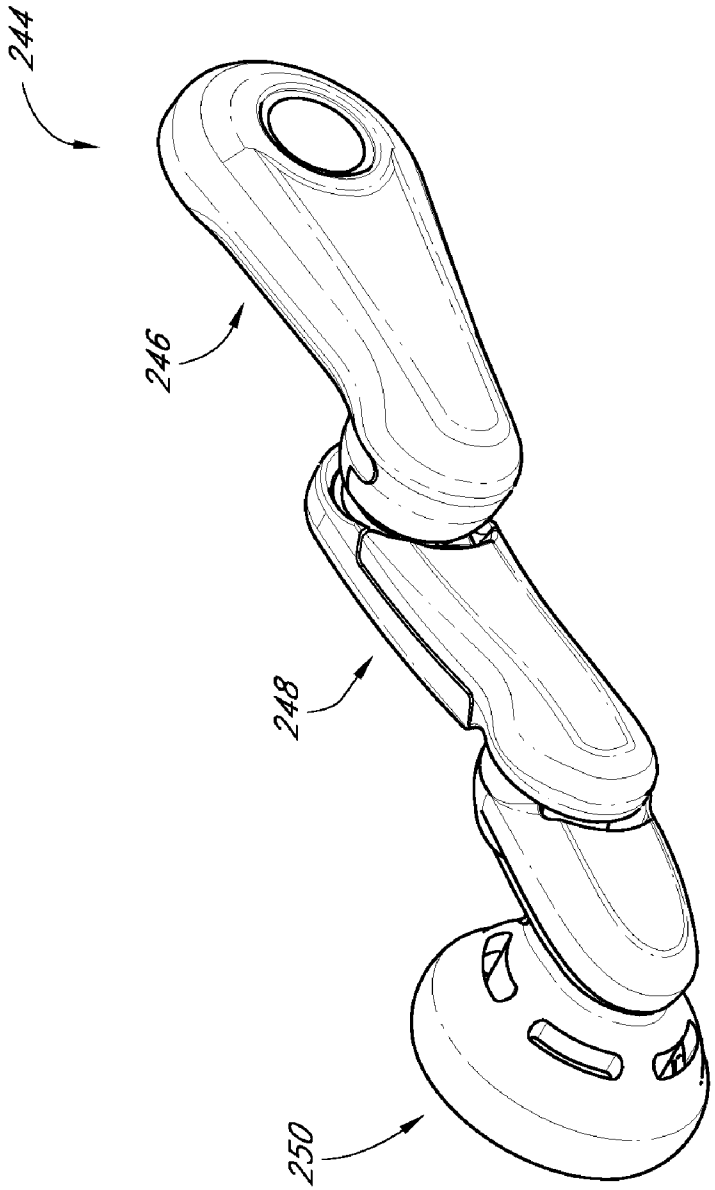

FIG. 39A

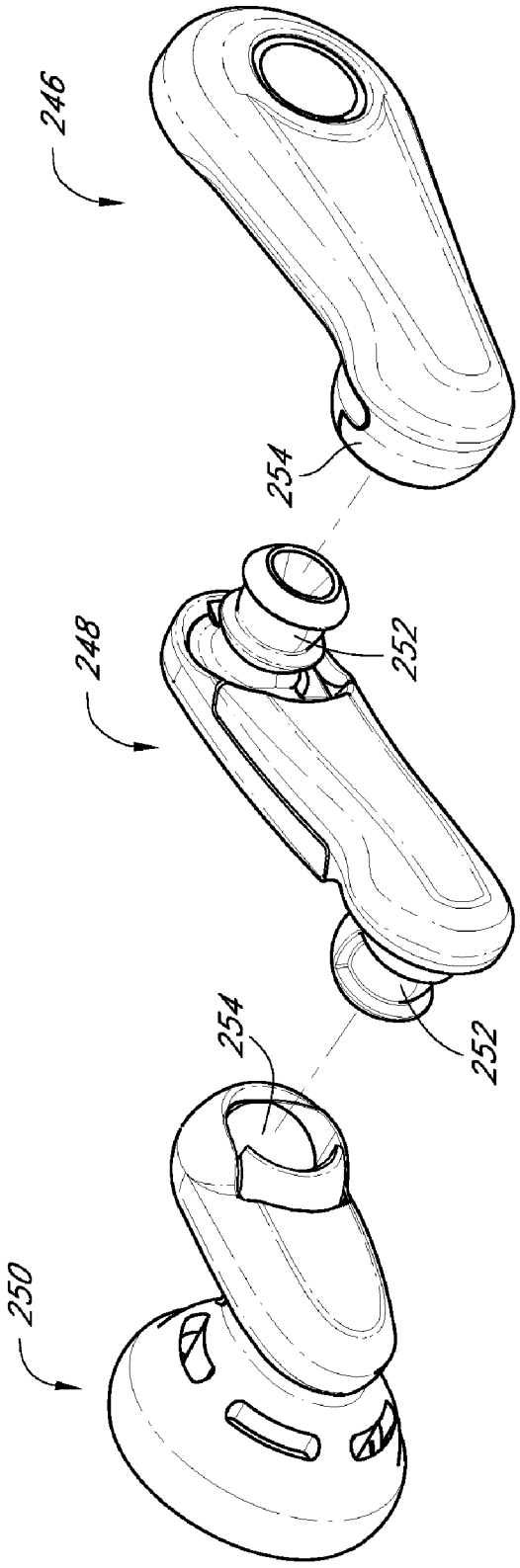

FIG. 39B

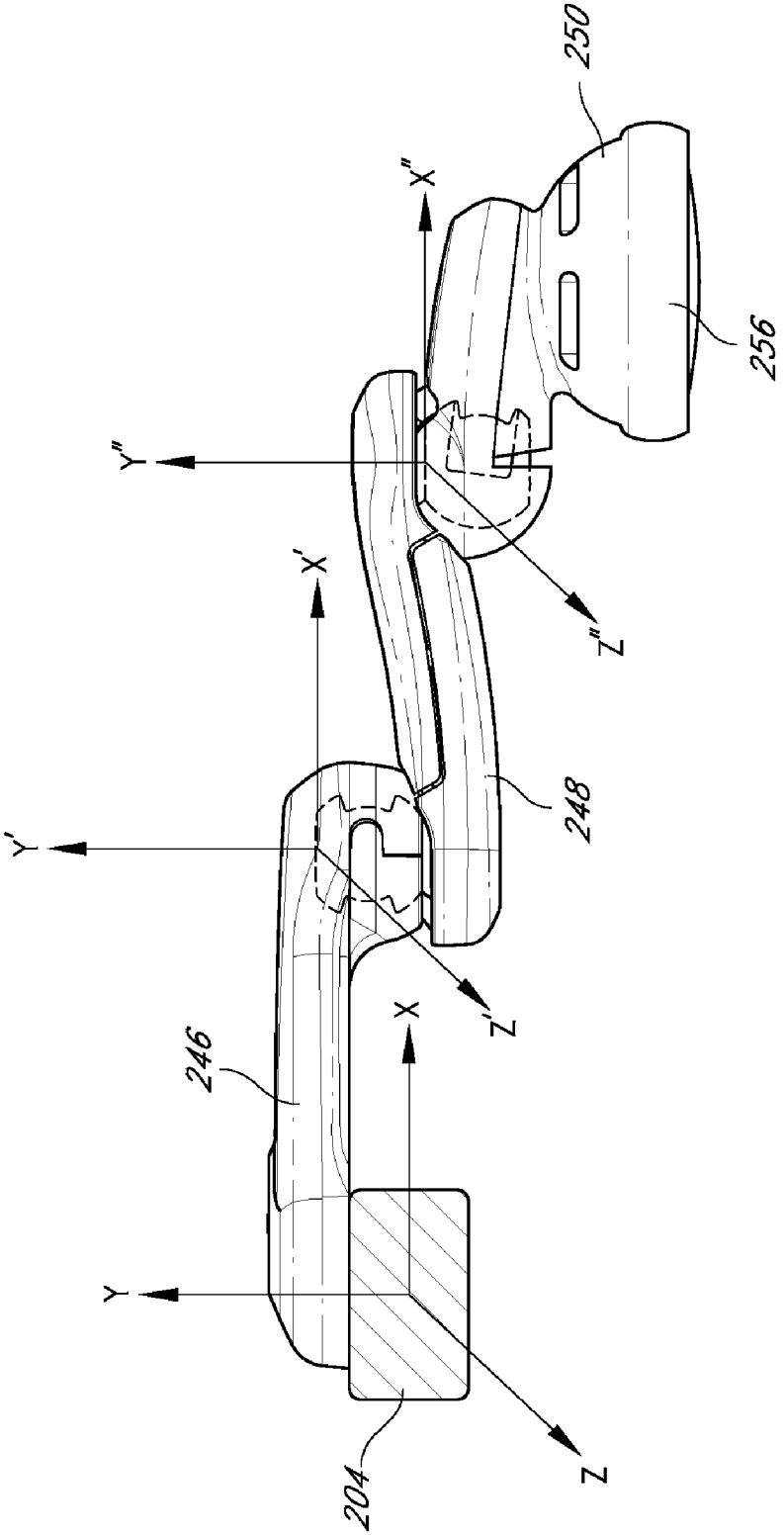

FIG. 40

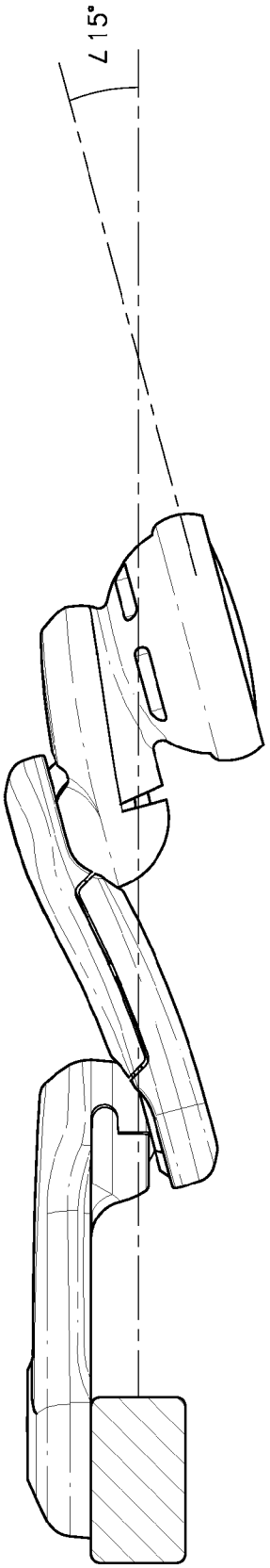

FIG. 41A

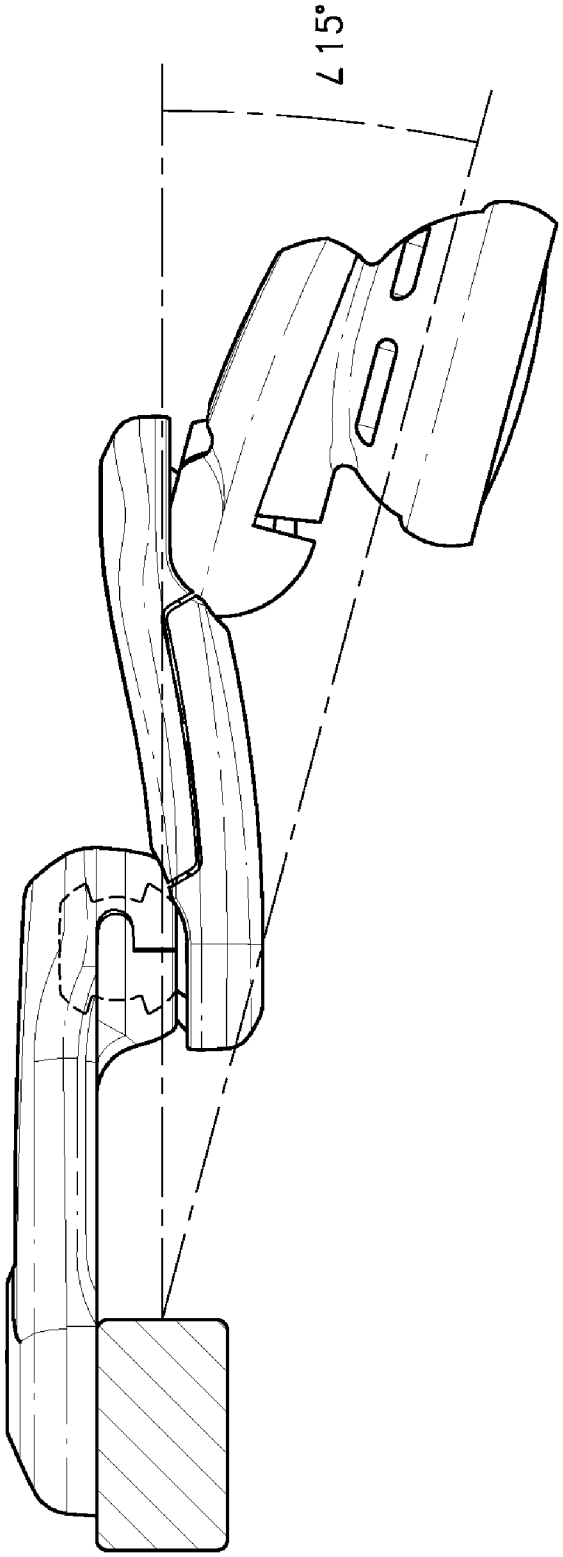

FIG. 41B

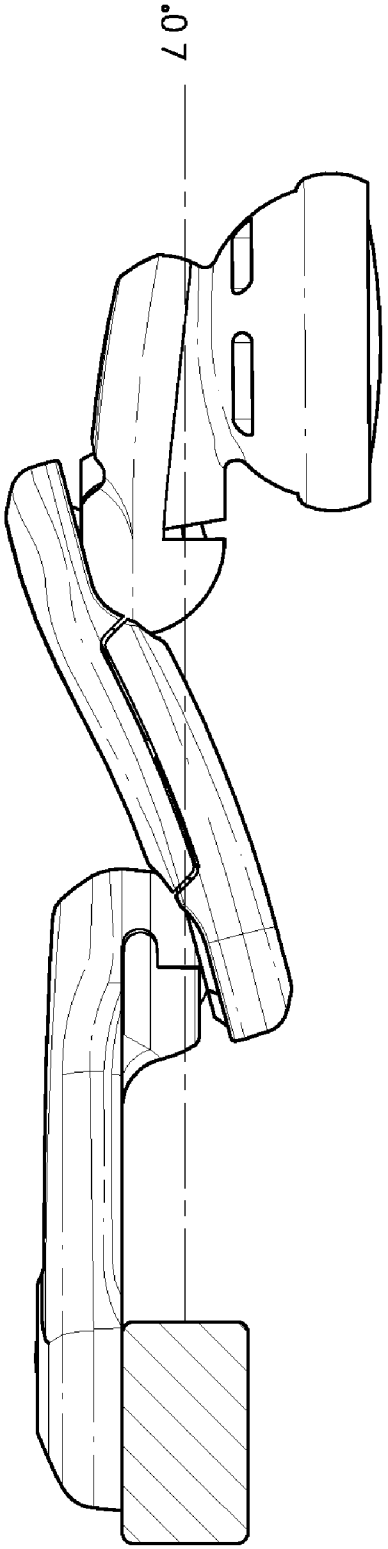

FIG. 41C

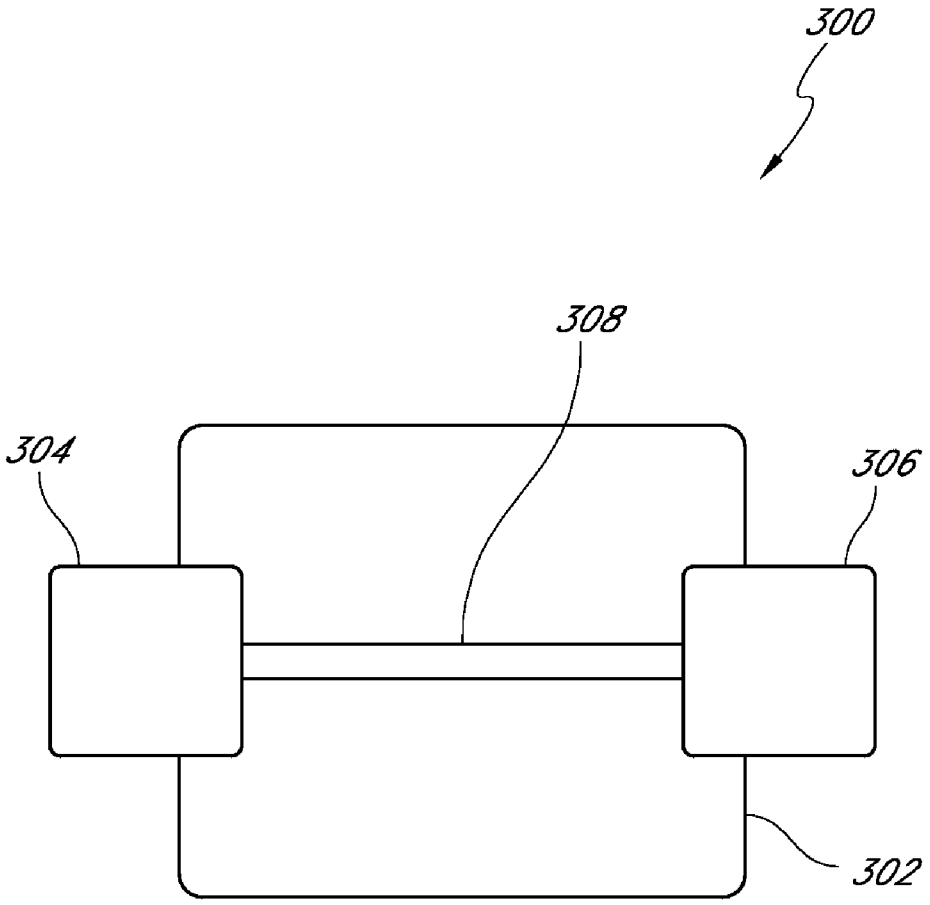

FIG. 42

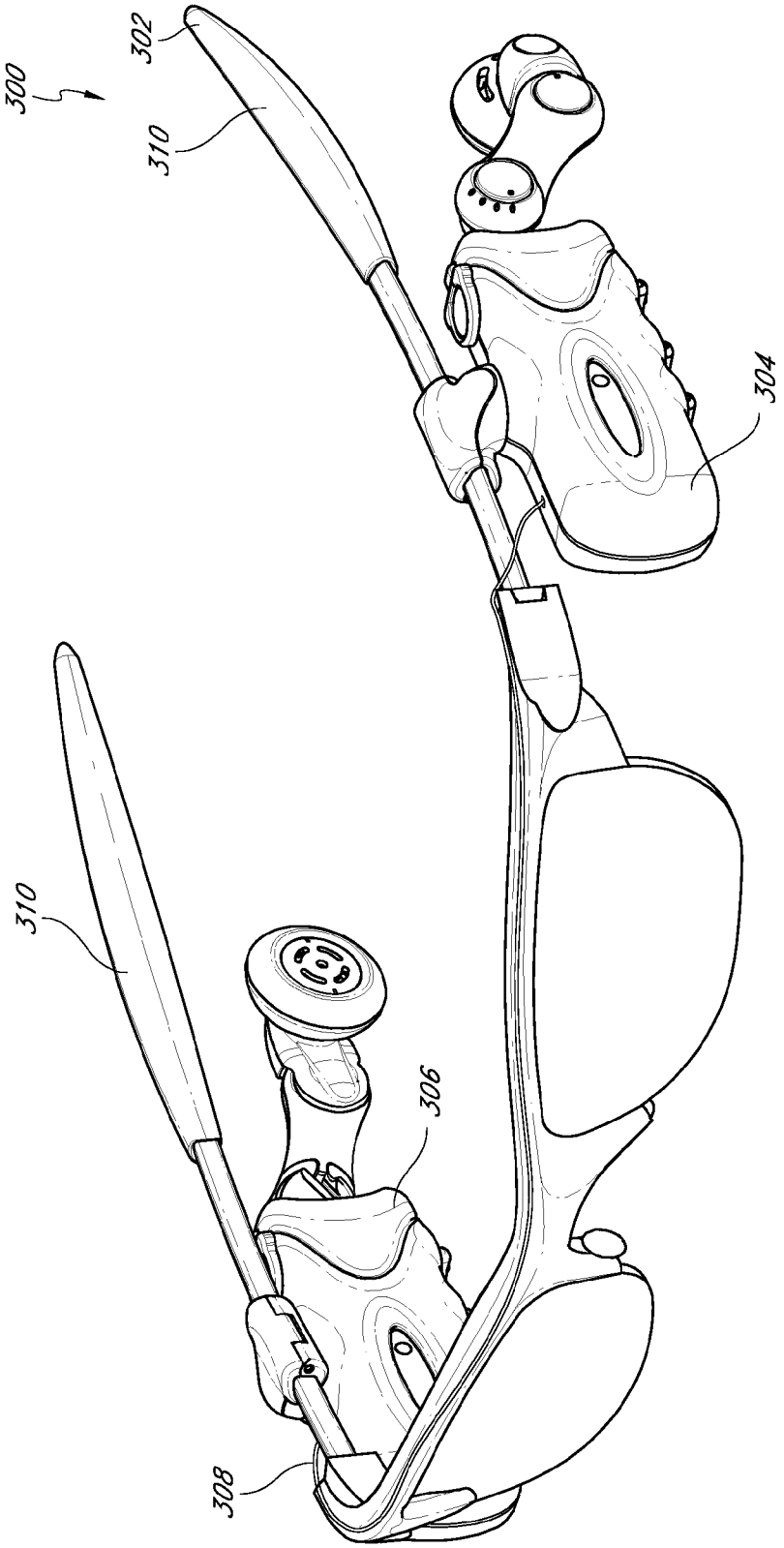

FIG. 43

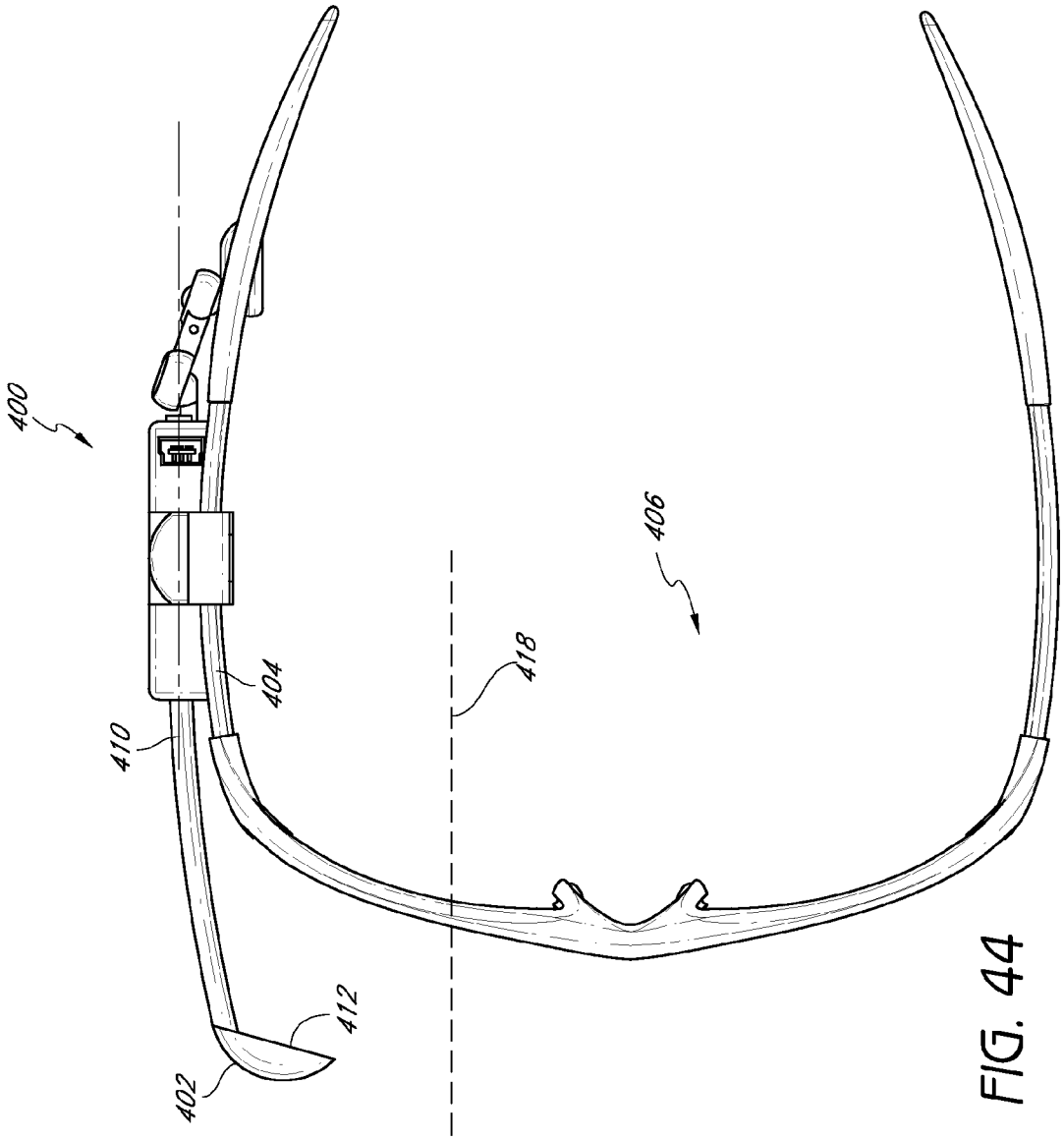

FIG. 44

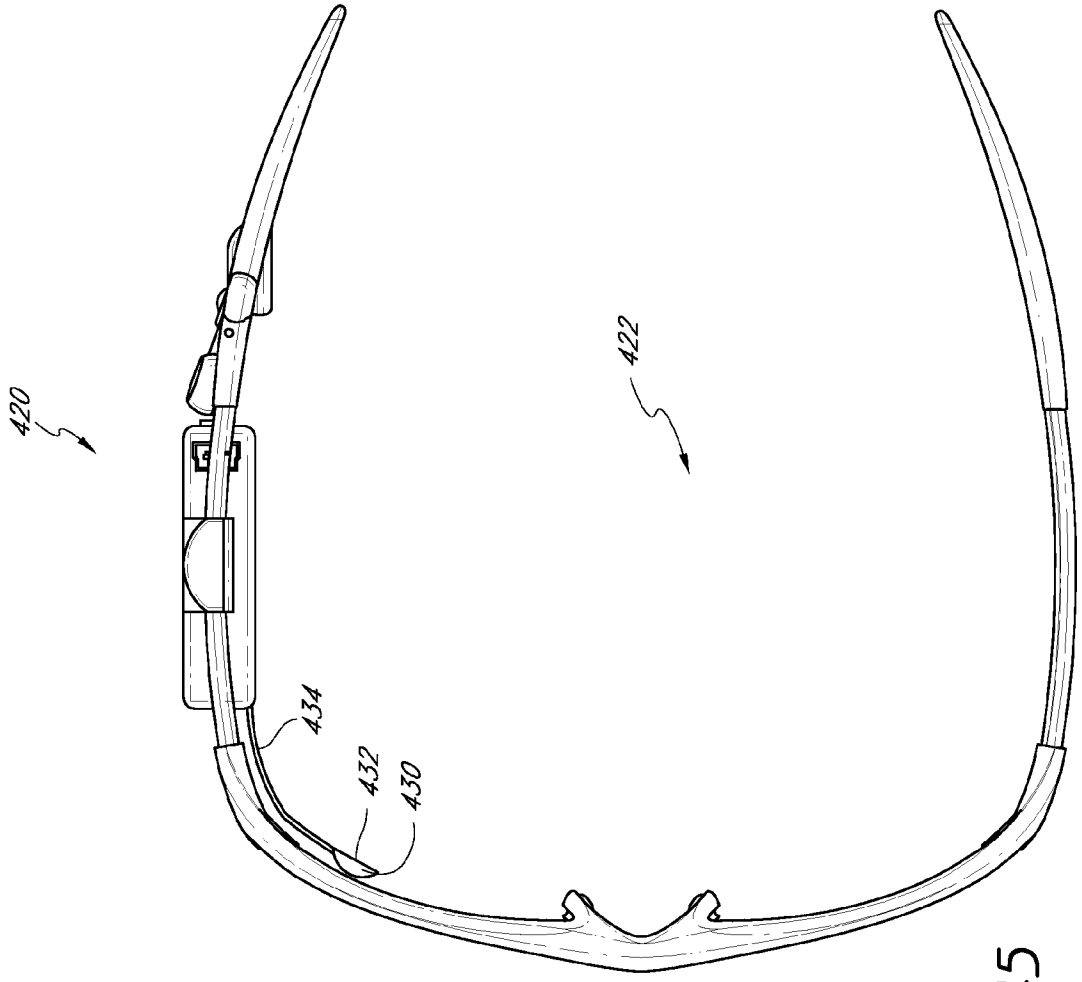

FIG. 45

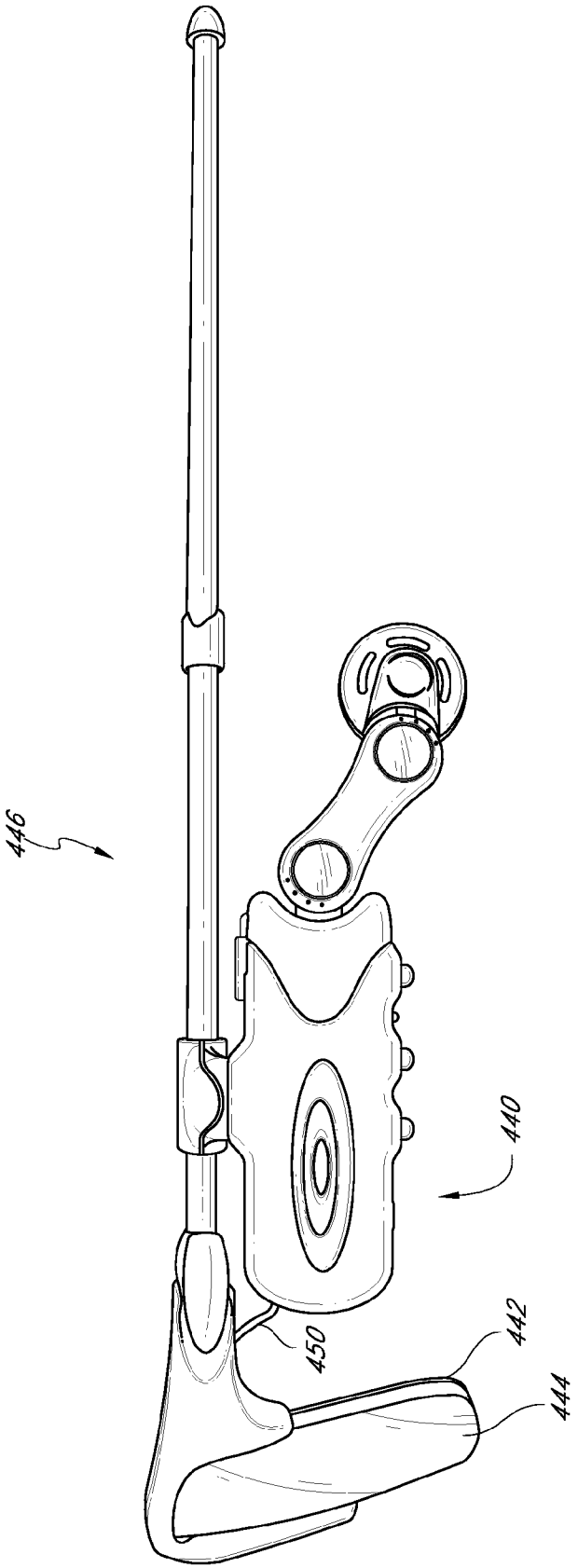

FIG. 46

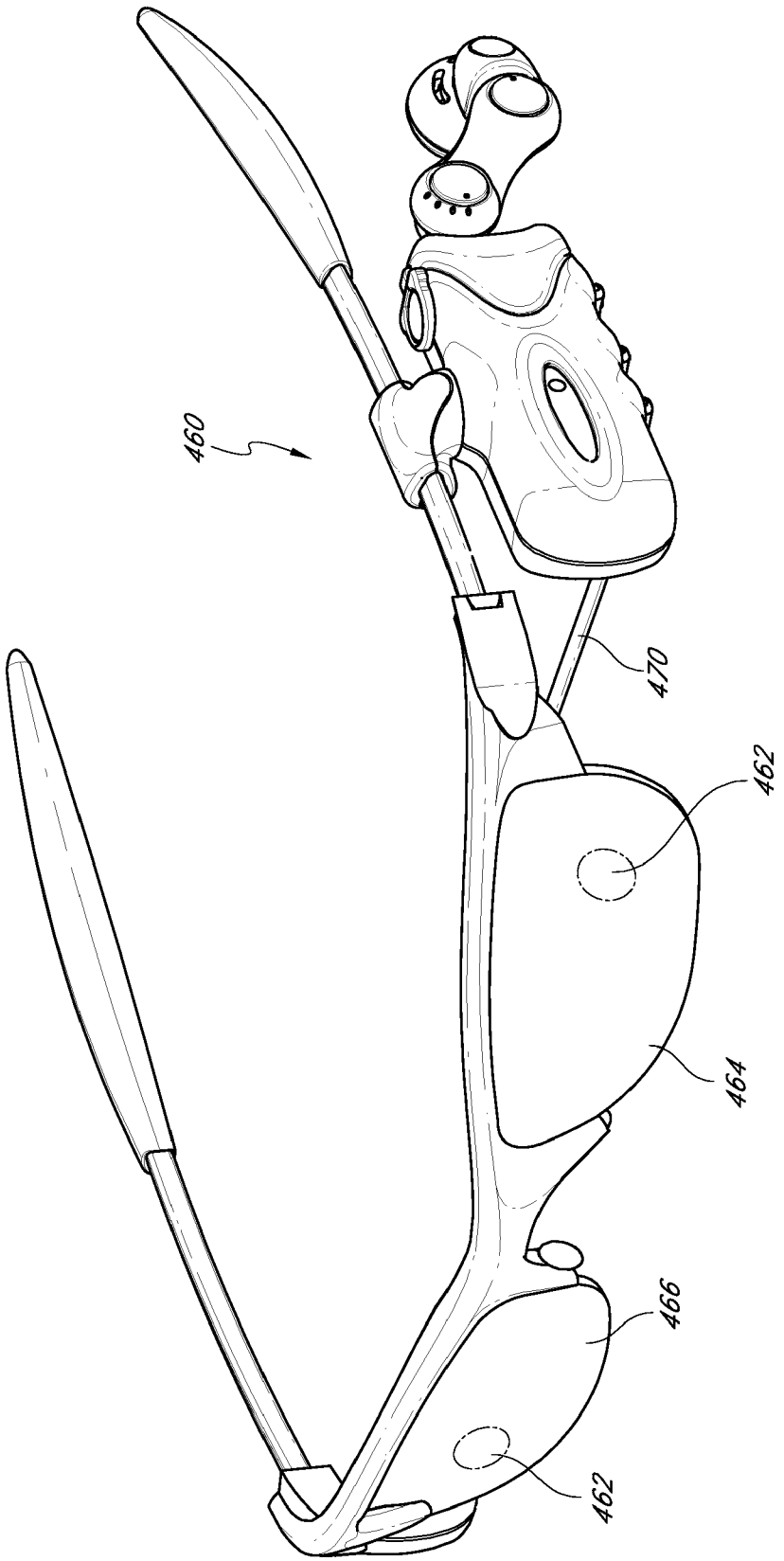

FIG. 47

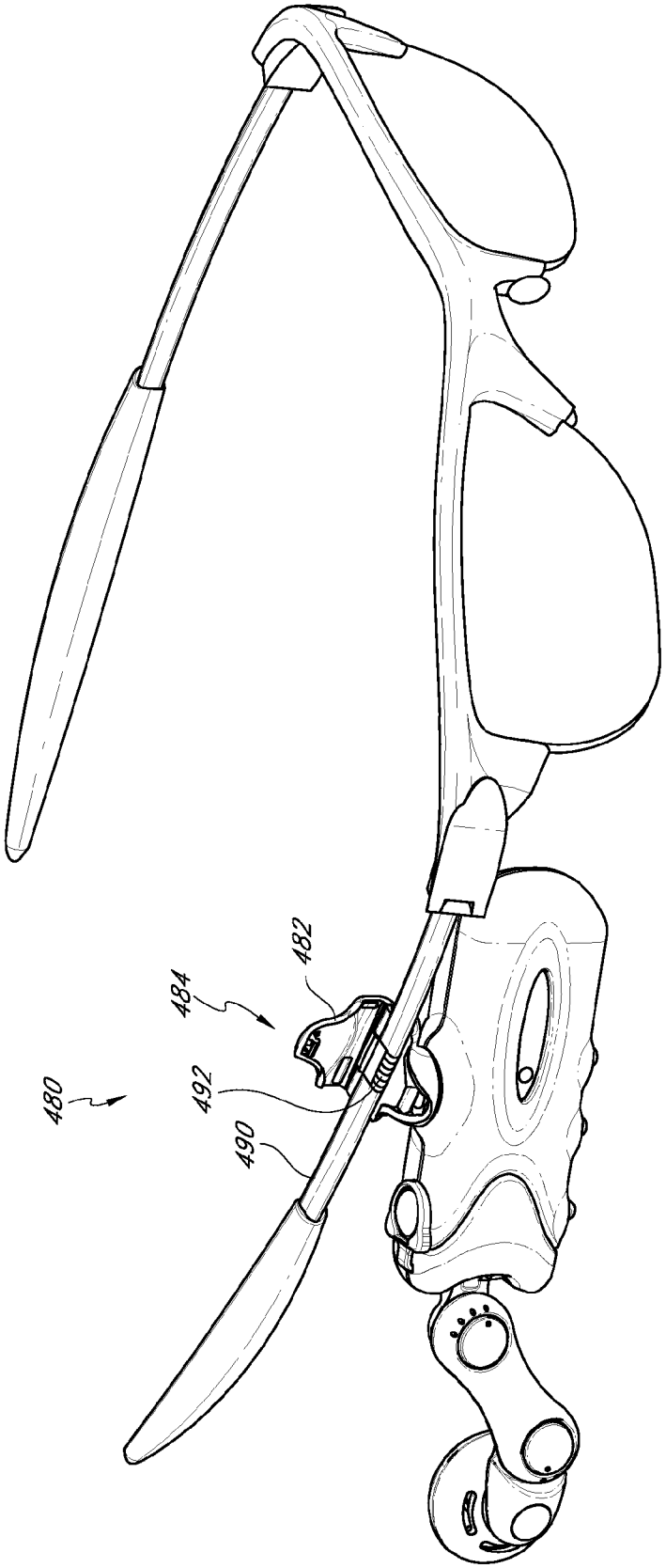

FIG. 48

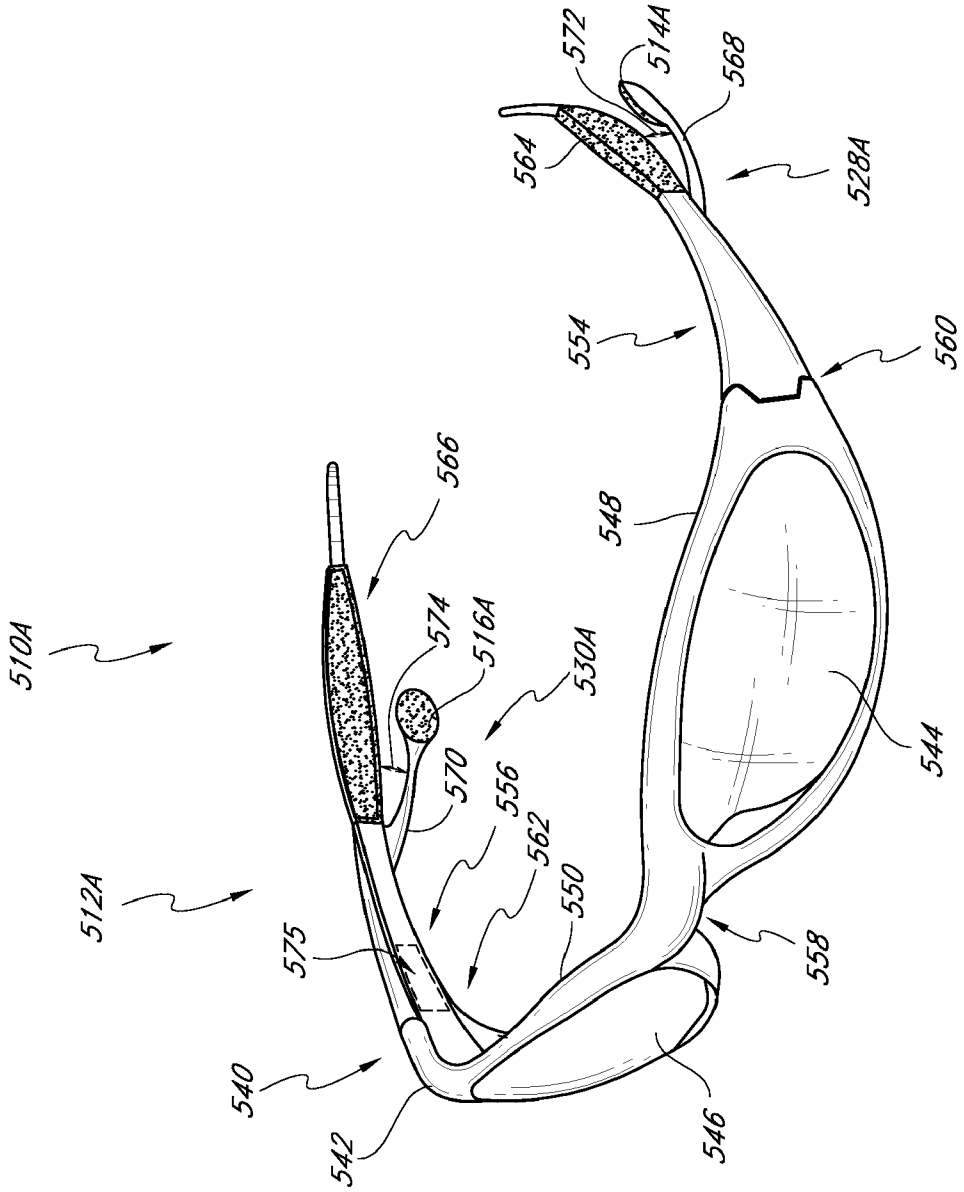
572
514A
568
564
528A
554
560
566
548
510A
574
516A
530A
570
556
562
544
512A
550
575
558
540
542
546

FIG. 49

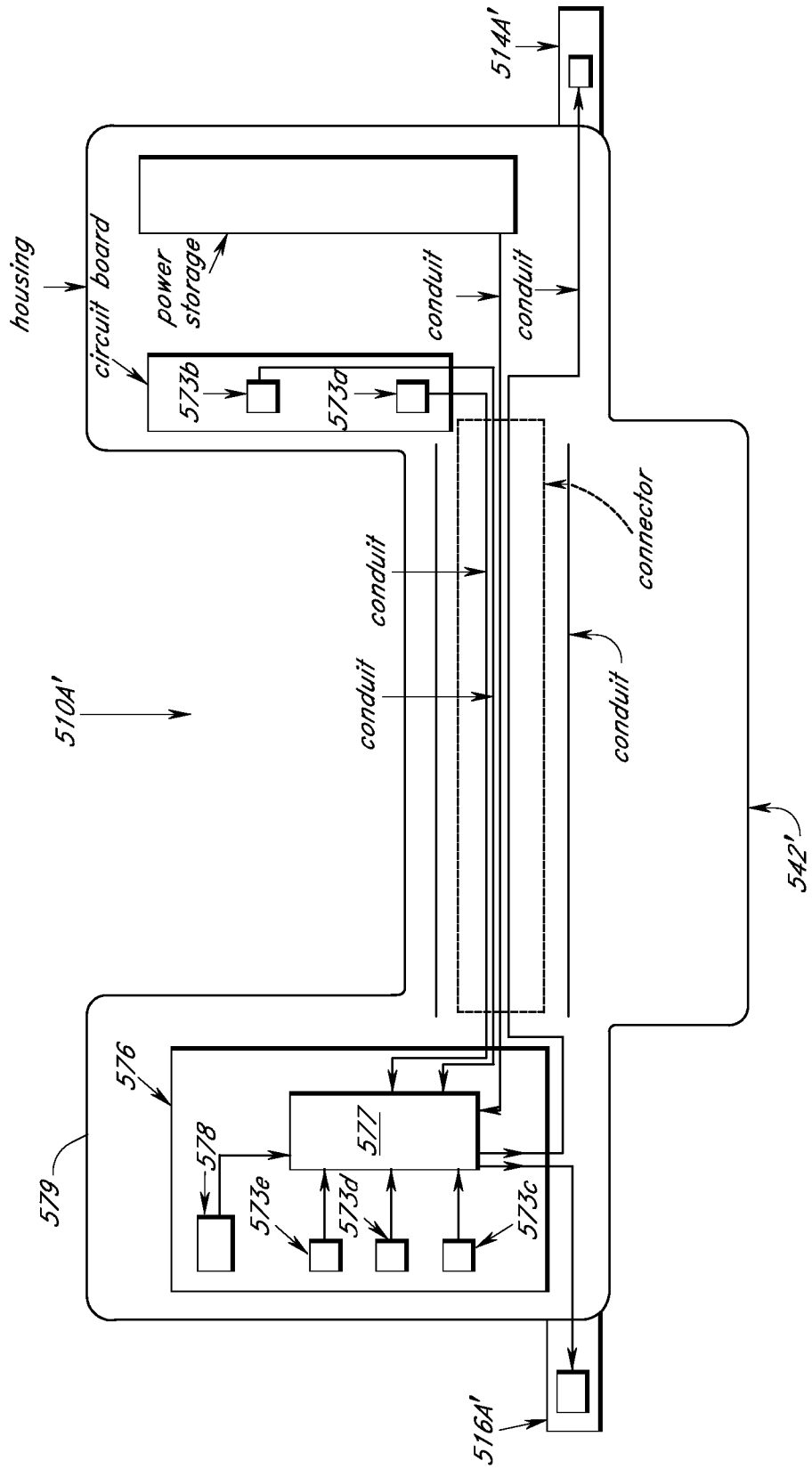
514A'
housing
circuit board
power storage
conduit
conduit
573b
573a
connector
conduit
conduit
conduit
510A'
542'
576
577
578
579
573e
573d
573c
516A'

FIG. 50

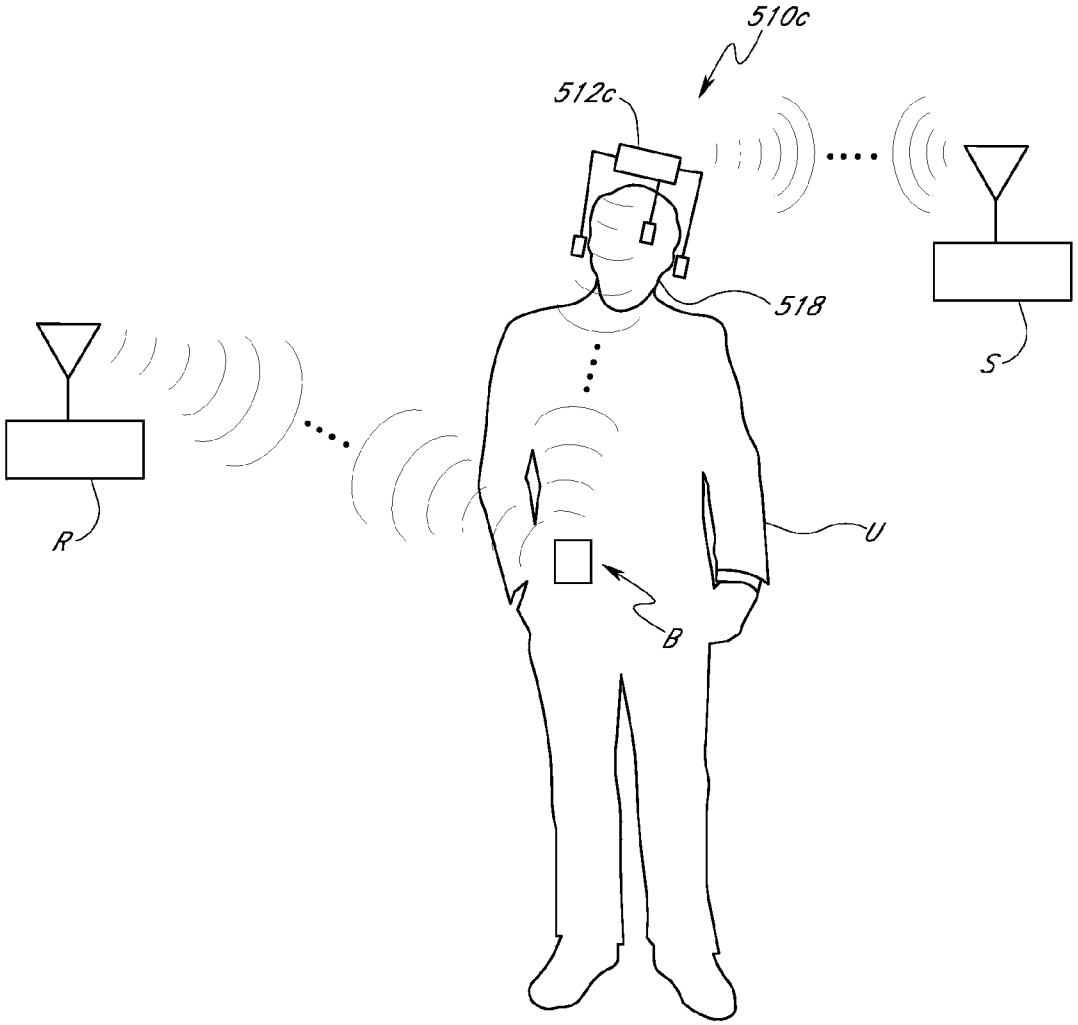

FIG. 51

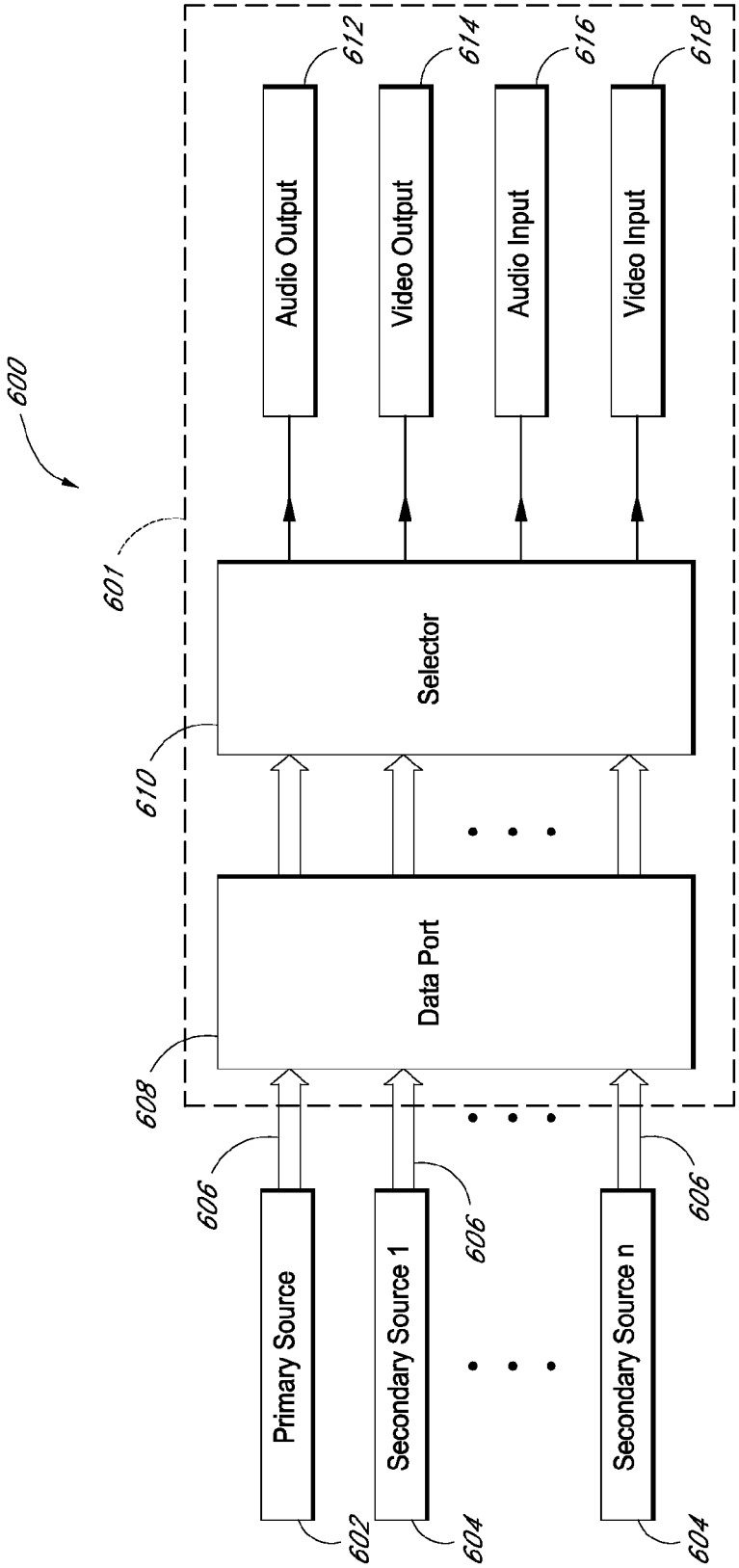
600
601
Audio Output
Video Output
Audio Input
Video Input
612
614
616
618
Selector
610
Data Port
608
606
606
606
Primary Source
Secondary Source 1
Secondary Source n
602
604
604

FIG. 52

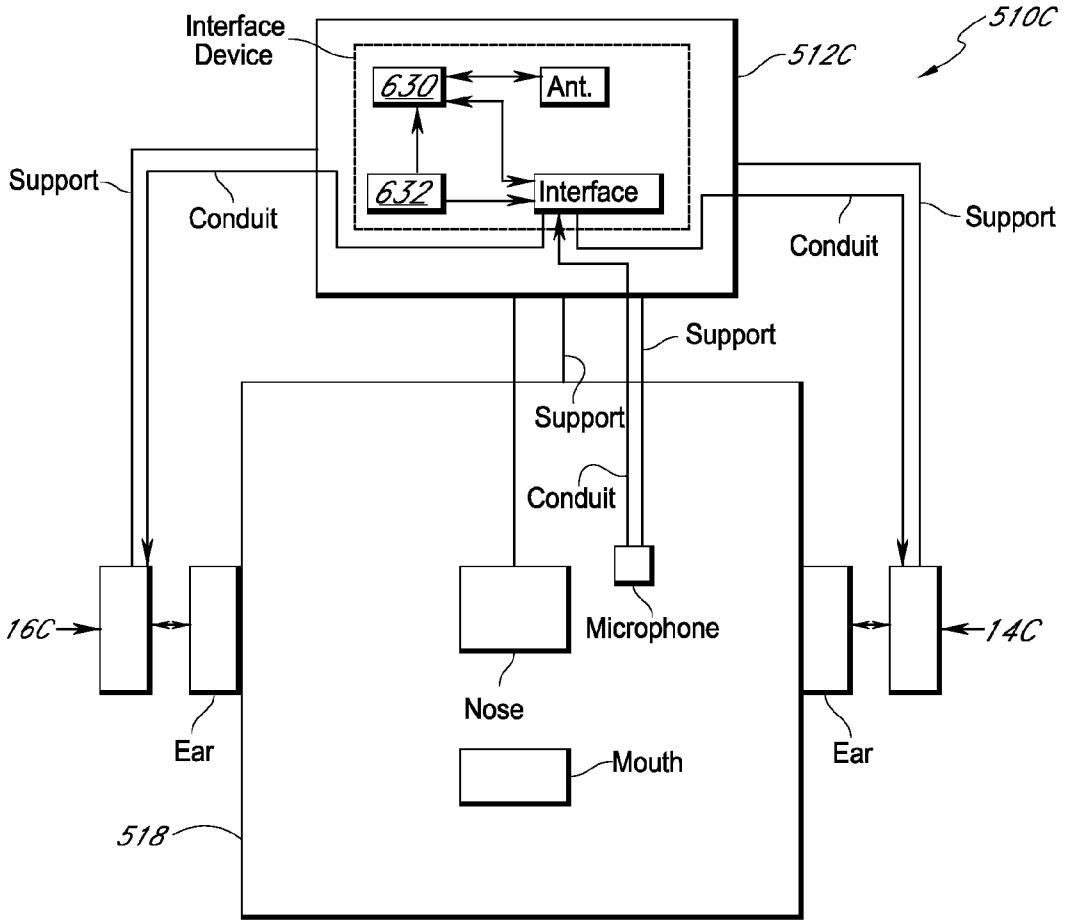

FIG. 53A

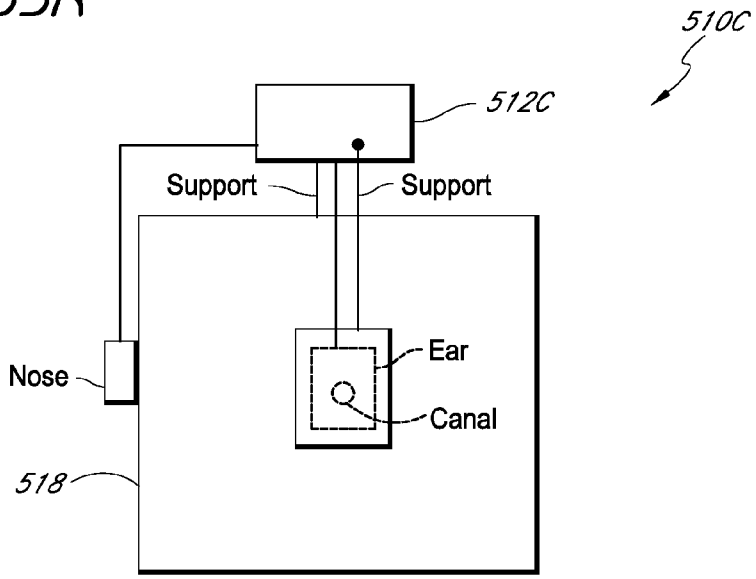

FIG. 53B

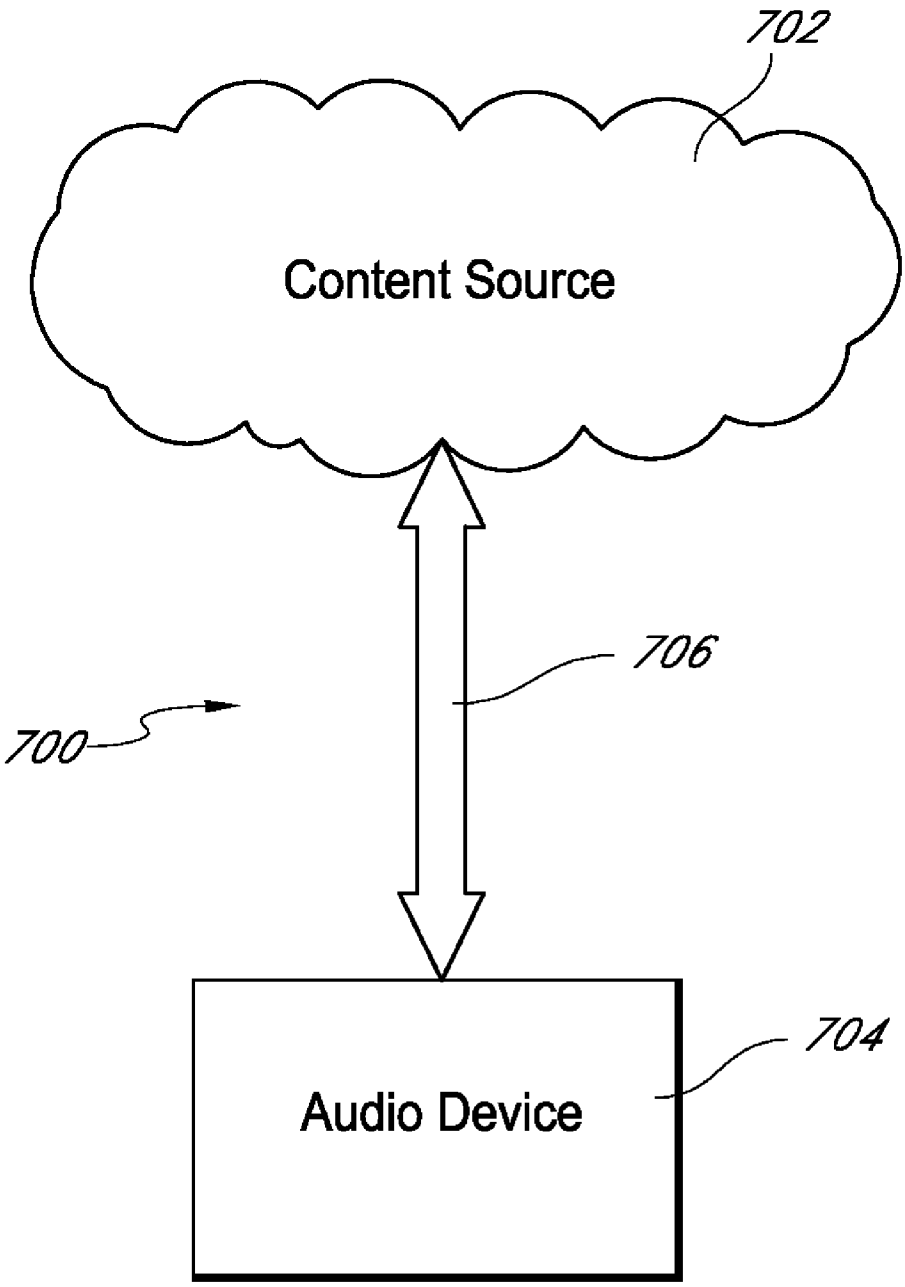

FIG.54

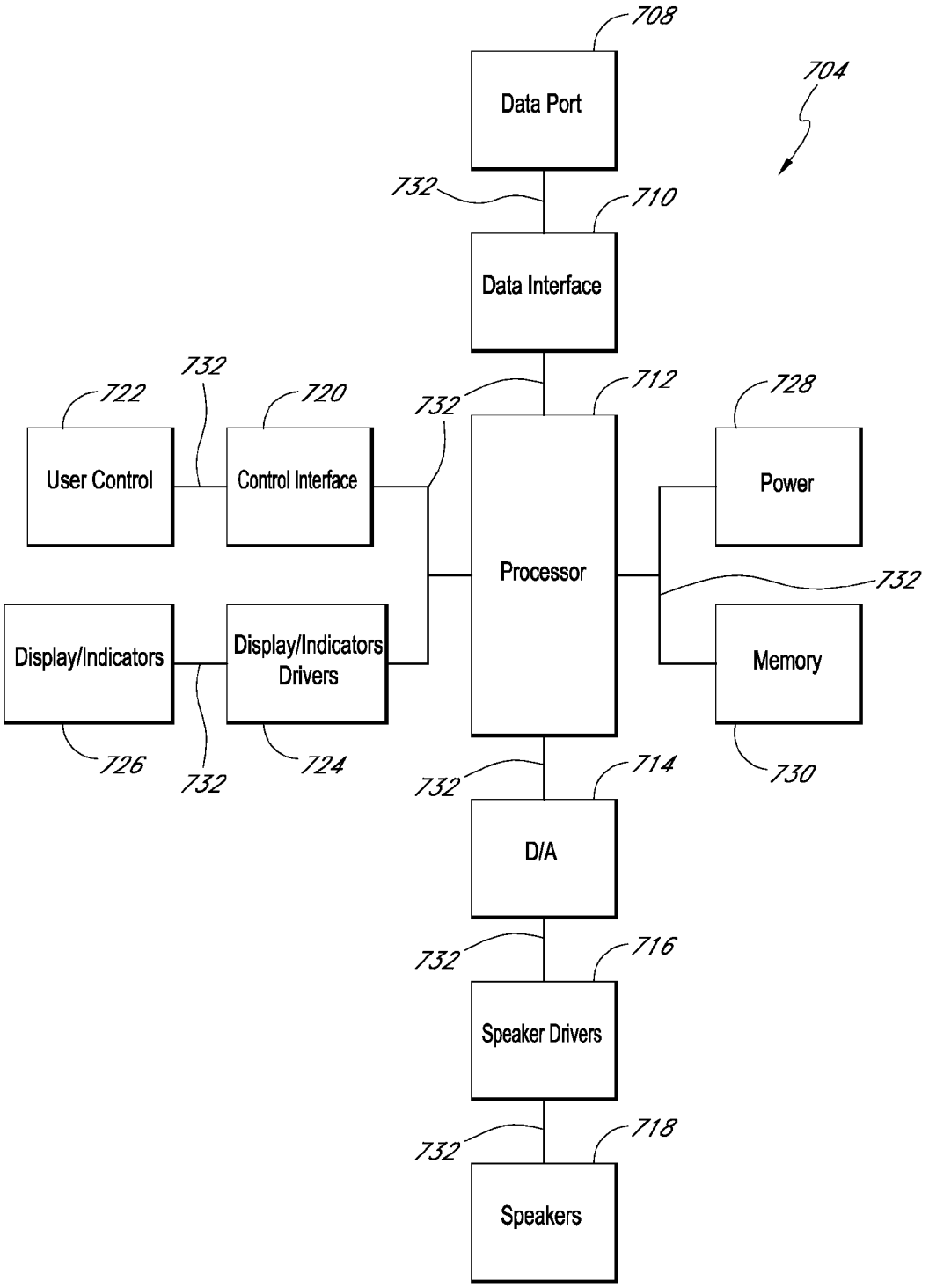
708
Data Port
704
732
710
Data Interface
732
722
720
732
712
728
User Control
Control Interface
Power
Processor
732
Display/Indicators
Display/Indicators Drivers
Memory
726
732
724
732
714
730
D/A
732
716
Speaker Drivers
732
718
Speakers

FIG.55

EYEWEAR WITH DETACHABLE ADJUSTABLE ELECTRONICS MODULE

CROSS-REFERENCE TO RELATED APPLICATIONS

Related Applications

[0001] This application is a continuation of U.S. application Ser. No. 12/730,106, filed Mar. 23, 2010, which is a continuation of U.S. application Ser. No. 12/331,327, filed Dec. 9, 2008, now U.S. Pat. No. 7,682,018, which is a continuation of U.S. application Ser. No. 11/352,938, filed Feb. 13, 2006, now U.S. Pat. No. 7,461,936, which is a continuation-in-part of U.S. application Ser. No. 10/993,217, filed Nov. 19, 2004, now U.S. Pat. No. 7,278,734, which is a continuation-in-part of U.S. application Ser. No. 10/628,831, filed Jul. 28, 2003, now U.S. Pat. No. 7,150,526, which claims priority from U.S. Provisional No. 60/399,317, filed Jul. 26, 2002 and U.S. Provisional No. 60/460,154, filed Apr. 3, 2003, and which is a continuation-in-part of U.S. application Ser. No. 10/004,543, filed Dec. 4, 2001, now U.S. Pat. No. 6,966,647, which is a continuation of U.S. application Ser. No. 09/585,593, filed Jun. 2, 2000, now U.S. Pat. No. 6,325,507; U.S. application Ser. No. 11/352,938, filed Feb. 13, 2006, now U.S. Pat. No. 7,461,936 is also a continuation-in-part of U.S. application Ser. No. 11/022,367, filed Dec. 22, 2004; and also claims priority from U.S. Provisional No. 60/652,272, filed Feb. 11, 2005, U.S. Provisional No. 60/652,937, filed Feb. 14, 2005, and U.S. Provisional No. 60/729,645, filed Oct. 24, 2005. All of the foregoing are expressly incorporated by reference herein.

BACKGROUND

[0002] 1. Field of the Invention

[0003] The present inventions are directed to wearable audio devices, and in particular, devices that humans can wear on their heads and which include electronics such as, for example, speakers, microphones, processors, transmitters, receivers, video display technology, and/or interface electronics for interacting with a wireless network and/or providing content to a user.

[0004] 2. Description of the Related Art

[0005] There are numerous situations in which it is convenient and preferable to mount audio input and output devices so that they can be worn on the head of a user. Such devices can be used for portable entertainment, personal communications, and the like. For example, these devices could be used in conjunction with cellular telephones, cordless telephones, radios, tape players, MP3 players, portable video systems, hand-held computers and laptop computers.

[0006] The audio output for many of these systems is typically directed to the wearer through the use of transducers physically positioned in or covering the ear, such as earphones and headphones. Earphones and headphones, however, are often uncomfortable to use for long periods of time.

[0007] In the portable audio playback and cell phone industries, certain devices for remote audio listening and/or use of a cell phone have become more popular. Certain companies have begun to widely distribute portable audio playback devices, such as MP3 players, and headsets for cell phones that allow a user to listen to audio with the use of headphones or ear plugs. For example, a user can wear a headset having speakers connected by a flexible cable to an MP3 player, which can be worn on the belt. Additionally, certain companies have begun to distribute wireless speaker and microphone modules, such as Bluetooth headsets, that are worn over the user's ear and allow wireless communication between the user and his cell phone.

[0008] However, with such headsets, whenever a user wants to wear glasses or sunglasses, they must adjust or remove the headset from their ears. Further, it is often quite uncomfortable to wear both a headset and a pair of sunglasses at the same time. Such discomfort, when applied for a long period of time, can cause muscular pain and/or headaches. In addition, the flexible cable extending from the MP3 player to the headphones and the instability of simultaneously wearing eyewear and a headset can limit mobility of the wearer; particularly those participating in sporting activities.

[0009] Despite the variety of devices available in the prior art, there remains a need for improved interface electronics and electronics modules, for providing content to a wearer.

SUMMARY

[0010] There is provided in accordance with some embodiments, a dual speaker eyewear system. The system comprises an eyeglass, having a right earstem and a left earstem. A first speaker is supported by the right earstem, and a second speaker is supported by the left earstem. An electronics module is supported by the eyeglass and in electrical communication with each of the first and second speakers.

[0011] The electronics module may be releasably connected to one of the right and left earstems. The electronic module may include an MP3 format memory, a radio frequency receiver, a radio frequency transmitter, a cellular telephone, video display technology, or other electronic devices.

[0012] In embodiments having a speaker, the speaker may be adjustable relative to the respective earstem, to align the speaker with the wearer's ear. Further, embodiments having video or heads-up display technology, the components of the display can be adjusted to align the display in a proper viewing location relative to the wearer's eye.

[0013] In accordance with some embodiments, the electronics module can be removably mounted to eyewear. The module comprises a housing and a clamp moveably mounted to the housing. A speaker is moveably mounted to the housing, and electronics are contained within the housing. The clamp and the speaker are moveable in a manner that permits conversion of the module between a first configuration and a second configuration, wherein the second configuration is a minor image of the first configuration.

[0014] The heads-up display technology can be carried by the electronics module for mounting on a support. The electronics module can be adjusted relative to the support to enable the heads-up display technology to be adjusted to user specifications. Thus, components of the heads-up display technology, such as inputs, outputs, circuitry, electronics, display panel, projector, etc. and other components can be adjusted, for example, in three dimensions to provide optimal user accommodation.

[0015] Further features and advantages of embodiments will become apparent to those of skill in the art in view of the detailed description of preferred embodiments which follows, when considered together with the attached drawings and claims.

[0016] In some embodiments, a support assembly is provided that can comprise a wearable support configured to support first and second speakers near a wearer's right and left ears, a first speaker supported by the wearable support and

configured to be positioned near the wearer's ear when worn, an electronics module supported by the wearable support and in electrical communication with each of the first and second speakers, and a display device supported by the support assembly. The first speaker, electronics module, and display device can be configured to be removably attached to the wearable support.

[0017] Further, the eyewear system can comprises an eyeglass, having a first earstem and a second earstem, a first speaker supported by the first earstem, a display device supported by the first ear stem, and an electronics module supported by the first earstem and in electrical communication with the first speaker, wherein the electronics module is configured to be rotated with respect to the first earstem while attached to the first earstem. Further, in some embodiments, the eyewear system can comprise a second speaker supported by the second earstem and in communication with the electronics module.

[0018] In some embodiments, a dual speaker eyewear system can be provided which comprises an eyeglass, having a first ear stem and a second earstem; a first speaker supported by the first earstem; a display device supported by the first ear stem; and an electronics module supported by the first earstem and in electrical communication with each of the first and second speakers, wherein the electronics module comprises a connector that allows the electronics module to be rotated with respect to the first ear stem and to be releasably connected to the first ear stem. Further, the system can comprise a second speaker supported by the second earstem.

[0019] In some embodiments, an electronics module can be provided for mounting to eyewear which comprises a housing; a clamp movably mounted to the housing; a speaker movably mounted to the housing; a display device supported by the housing; and electronics contained in the housing; wherein the clamp and speaker are movable in a manner that permits conversion of the module between a first configuration and a second configuration which is a minor image of the first configuration.

[0020] Some embodiments can also be configured such that the eyewear system comprises an eyeglass, having a right ear stem and a left earstem; a first speaker supported by the right earstem; a display device supported by the ride ear stem; and an electronics module supported by the eyeglass and in electrical communication with each of the first speaker and the display device, wherein the electronics module is releaseably connected to one of the right and left earstems, and wherein the electronics module includes an MP3 format memory. Further, the system can comprise a second speaker supported by the left earstem.

[0021] The electronics module can comprise an MP3 format memory, a radio frequency receiver, a radio frequency transmitter, and/or a cellular telephone. The first speaker can be adjustable relative to the right earstem. The system can further comprise an articulating arm that couples the first speaker to the right earstem.

[0022] In some embodiments, the support assembly can further comprise a second speaker supported by the wearable support and configured to be positioned near the wearer's other ear when worn. Further, the first speaker can be adjustable relative to the wearable support. The assembly can further comprise an articulating arm that couples the first speaker to the electronics module.

[0023] In accordance with other embodiments, a kit can be provided for electronically enabling a wearable support. The kit can comprise a first speaker assembly comprising a first speaker and a first coupling, the first coupling configured to removably attach to the wearable support, source electronics supported by the first speaker assembly, a display device supported by the first speaker assembly, and a communications link in communication with the first speaker, the display device, and the source electronics.

[0024] Further, the kit can comprise a first speaker, adjustably connected to a first clamp, source electronics adjustably connected to the first clamp, a display device supported by the first clamp, and a communications link coupling the first speaker to the source electronics and the display device.

[0025] Further, some embodiments of the kit can also comprise a second speaker adjustably connected to a second clamp and in communication with the communications link. The kit can also be configured to comprise a second speaker assembly comprising a second speaker and a second coupling, wherein the second coupling is configured to removably attach to the wearable support. Further, the source electronics can comprise a digital music player, a radio frequency transmitter, a radio frequency receiver, and/or a cellular telephone.

[0026] In some embodiments, the kit can comprise a first speaker, adjustably connected to a first clamp; source electronics; a display device; and wiring connecting the first speaker and the display device to the source electronics, wherein the first speaker, the display device, source electronics, and wiring are configured to be removably attached to an eyewear. Further, the kit can also comprise a second speaker adjustably connected to a second clamp.

[0027] The wearable support can comprise an article of clothing. Further, the kit can comprise an article of clothing. Further, the electronics module can be configured to be rotated with respect to the wearable support while attached to the wearable support. In addition, the electronics module can also comprise a clamp.

[0028] The kit can also be configured such that the source electronics are configured to be rotated with respect to the wearable support while attached to the wearable support. In some embodiments of the kit, the communications link can comprise wiring. Further, the first coupling can comprise a clamp. Finally, the first speaker assembly can further comprise a housing and an articulating arm, and the articulating arm can couple the first speaker to the housing.

BRIEF DESCRIPTION OF THE DRAWINGS

[0029] FIG. **1** is a side view of a support assembly in accordance with one embodiment of the present invention;

[0030] FIG. **2** is a side view of another support assembly in accordance with another embodiment of the present invention;

[0031] FIG. **2**A is a partial side view of the support assembly of FIG. **2** showing lenses moved out of a wearer's field of view;

[0032] FIG. **3** is a perspective view of another support assembly in accordance with another embodiment of the present invention;

[0033] FIG. **4** is a top view of the support assembly of FIG. **5**;

[0034] FIG. **5** is a perspective view of a detachable module in accordance with one embodiment of the present invention;

[0035] FIG. **6** is another perspective view of the detachable module of FIG. **6**;

[0036] FIG. **7** is a top view of the detachable module of FIG. **5**;

[0037] FIG. **8** is a side view of the detachable module of FIG. **5**;

[0038] FIG. **9** is an end view of the detachable module of FIG. **5**;

[0039] FIG. **10** is a bottom view of the detachable module of FIG. **5**;

[0040] FIG. **11** is another perspective view of the detachable module of FIG. **5**;

[0041] FIG. **12** is an exploded view of the detachable module of FIG. **5**;

[0042] FIG. **13** is an exploded view of the coupler of the detachable module of FIG. **5**;

[0043] FIG. **14** is a perspective view of another coupler in accordance with another embodiment of the present invention;

[0044] FIG. **15** is an exploded view of the speaker and arm of the detachable module of FIG. **5**;

[0045] FIG. **16** is an exploded view of an internal assembly of the detachable module of FIG. **5**;

[0046] FIGS. **17** and **18** are perspective views of the grommet of the detachable module of FIG. **5**;

[0047] FIGS. **19** and **20** show one aspect of the angular adjustability of the speaker and arm of the detachable module of FIG. **5**;

[0048] FIGS. **21** and **22** show one aspect of the linear translation and position adjustability of the detachable module of FIG. **5**;

[0049] FIG. **23** shows the rotation of the coupling with respect to the housing of the detachable module of FIG. **5**;

[0050] FIG. **24** shows the reversibility of the detachable module of FIG. **5** such that it may be moved from one earstem of a support to the other earstem;

[0051] FIG. **25** through **28** show the reversibility of the detachable module of FIG. **5**;

[0052] FIG. **29** is one embodiment of a method of moving a detachable module from one earstem of eyewear to the other;

[0053] FIG. **30** shows a detachable module in accordance with another embodiment of the present invention;

[0054] FIG. **31** is a side view of the clamp assembly of the detachable module of FIG. **30**;

[0055] FIG. **32** is an exploded view of the clamp assembly of FIG. **31**;

[0056] FIGS. **33**A and **33**B are perspective views of coupling assemblies including the clamp assembly of FIG. **31**;

[0057] FIGS. **34**A and **34**B are perspective views of the housing of detachable modules suitable to be coupled with the coupling assemblies of FIGS. **33**A and **33**B, respectively;

[0058] FIG. **35** is a perspective view of the detachable module of FIG. **30** attached to a support;

[0059] FIGS. **36**A-**37**B are side views of the detachable module of FIG. **30** coupled to a support, showing an anterior-posterior range of motion and a vertical tilt range of motion;

[0060] FIGS. **38**A-**38**C are end views of the detachable module of FIG. **35** showing a lateral-medial direction tilt range of motion;

[0061] FIG. **39**A is one embodiment of an articulating arm suitable to be connected to the detachable module of FIGS. **30**-**38**C or directly to a pair of eyewear;

[0062] FIG. **39**B is an exploded perspective view of the articulating arm of FIG. **39**A;

[0063] FIGS. **40**-**41**C are side views of the articulating arm of FIG. **39**A showing special adjustability of its multiple segments in a lateral-medial direction;

[0064] FIG. **42** is a schematic view of a support assembly in accordance with another embodiment of the present invention; and

[0065] FIG. **43** is a perspective view of one specific embodiment of the support assembly of FIG. **42**.

[0066] FIG. **44** is a top view of a support assembly having a heads-up display component, according to an embodiment.

[0067] FIG. **45** is a top view of a support assembly having a heads-up display component, according to another embodiment.

[0068] FIG. **46** is a side view of a support assembly having a heads-up display component, according to yet another embodiment.

[0069] FIG. **47** is a perspective view of a support assembly having a heads-up display component, according to yet another embodiment.

[0070] FIG. **48** is a perspective view of a support assembly that can form an electrical interface with eyewear, according to an embodiment.

[0071] FIG. **49** is a front, left side, and top perspective view of a modification of a wearable audio device, according to an embodiment.

[0072] FIG. **50** is a schematic illustration of an audio device, according to an embodiment.

[0073] FIG. **51** is a schematic representation of a front elevational view of a further modification of an audio device worn by a wearer and interacting with source electronics, according to an embodiment.

[0074] FIG. **52** is a schematic illustration of an input data management system, according to an embodiment.

[0075] FIG. **53**A is an enlarged schematic representation of a front elevational view of the audio device illustrated in FIG. **52**.

[0076] FIG. **53**B is a schematic representation of a left side elevational view of the audio device illustrated in FIG. **53**A.

[0077] FIG. **54** is a schematic representation of an audio and/or visual network, in accordance with some embodiments.

[0078] FIG. **55** is a schematic representation of an audio and/or visual device, in accordance with some embodiments of FIG. **54**.

DETAILED DESCRIPTION

[0079] A support assembly **100** in accordance with one embodiment of the present inventions are illustrated in FIG. **1**. The support assembly **100** generally includes a support **102** and a detachable module **104**, and can be any structure worn by a wearer that is adapted to carry, hold, or contain another device, such as an electronic device. For example, the support assembly **100** can be or include an audio device. In addition, the support assembly **100** can include an eyeglass frame, sports or other protective goggle, or other eyewear assembly. Although generally described herein as a detachable module, the module **104** can also be permanently mounted (by rigid fixation, or adjustably as disclosed in greater detail below) to the earstem, slide rail or other component of the eyeglass or other headwear.

[0080] The support **102** is generally any structure capable of being worn that is also able to carry a device such as an electronic device. The support **102** can include any of a variety of wearable structures such as, for example, a hat, a belt,

a vest, an article of clothing, and/or eyewear, including eyeglasses. As discussed further herein, embodiments can be provided which allow a user to mount a visual display apparatus on the one of a variety of user wearable supports. However, it is also contemplated that the support can be any of a variety of other structures that are not physically worn by the user, but which can be maintained in a generally stable or stationary spatial relationship relative to the user. In some embodiments, an adjustable module can be provided which allows the user to access a visual display system in any variety of locations and conditions. As used herein, the terms "visual" and "video" can both be used to refer hardware or software used to provide viewable data, video, or other information to a wearer. Thus, reference to a "video display device" does not require or convey that the device only displays videotaped or televised materials, but can also encompass digital displays, alphanumeric displays, and other non-video displays.

[0081] The detachable module **104** is any structure capable of being carried by the support **102**. In one embodiment, the detachable module **104** includes a housing, containing an electronic assembly, as is described in greater detail below.

[0082] In the illustrated embodiment, the support **102** includes eyeglasses, which have a frame **106** that can include at least one orbital or lens support **108**. The orbital **108** is adapted to hold at least one lens **110** in the field of vision of the wearer of the support assembly **100**.

[0083] The support **102** also includes at least one earstem **112**. The earstem **112** is coupled to the frame **106** with a coupling **114** located at the anterior portion **116** of the earstem **112**. In one embodiment, the coupling **114** is a hinge, although the coupling **114** can be any structure known to those of skill in the art for coupling an earstem **112** to a frame **106**. In other embodiments, the support **102** does not include a coupling **114**. In such embodiments, the earstems **112** are integrally formed with the frame **106**.

[0084] The earstem **112** includes a support section or rail **118** and a head contacting portion **120**. The rail **118** is designed to engage a corresponding clamp on the detachable module **104**. The detachable module **104** is detachably coupled to the rail **118** by any of a variety of mechanisms, such as those described in greater detail below. The detachable module **104** is adapted to move with respect to the rail **118**. In one embodiment, the detachable module **104** moves along the rail's longitudinal axis in an anterior-posterior (or posterior-anterior) direction. Axial movement of the detachable module **104** with respect to the rail **118** may be limited in the anterior direction by an anterior stop **122**, and in the posterior direction by a posterior stop **124**.

[0085] The head contacting portion **120** of the earstem **112** can be provided with an elastomeric traction device, such as that disclosed in U.S. Pat. No. 5,249,001, filed Aug. 27, 1991, which is incorporated by reference herein. A padded portion on the head contacting portion **120** is generally made from a soft material, such as a foam, a plastic, cloth, or any of a variety of soft polymers, and provides a comfortable interface between the wearer's head and the support assembly **100** when worn by a user.

[0086] In one embodiment, the detachable module **104** includes one or more of a communication module, a music module, an audio-video module, and/or another electronics module. Such a module **104** can be used to drive a heads-up display such as those discussed further herein. In one embodiment, the detachable module **104** is a communications module that allows the wearer of the support assembly **100** to wirelessly communicate with an electronic device. For example, the detachable module **104** can include one or more of a speaker, a microphone, a power supply and a Bluetooth or other radio frequency transceiver for wirelessly communicating with a remote device such as a cellular telephone.

[0087] In the embodiment illustrated in FIG. **1**, the rail **118** is a longitudinal segment of the earstem **112**. In the illustrated embodiment, the rail **118** is concentric with the longitudinal axis of the earstem **112**. However, in other embodiments, such as illustrated in FIG. **2**, the rail **118** is spaced an offset distance **126** from the longitudinal axis of the earstem **112**.

[0088] The orbitals **108** of the support **102** can be integrally formed with the frame **106**, such as illustrated in FIG. **1**. However, in other embodiments, the orbitals **108** are hingably connected to the frame **106** such as illustrated in FIG. **2**A. In the embodiment of FIG. **2**A, an orbital hinge **128** couples the orbital **108** with the frame **106**. By hingably coupling the orbital **108** to the frame **106**, the lenses **110** may be rotated about a hinge axis and moved out of the wearer's line of sight when desired. For example, if lenses **110** include sunglass lenses then orbital hinge **128** allows the wearer of the support assembly **100** to lift the lenses **110** out of the field of view when the wearer moves indoors without removing the support assembly **100** from his head. In any of the embodiments herein, the lenses may be supported in a "rimless" design as is understood in the art, in which the lens is attached to the frame or other adjacent components without the use of an orbital.

[0089] Another embodiment of a support assembly **100** is illustrated in FIG. **3**. In the illustrated embodiment, at least a portion of the rail **118** has a non-round cross-sectional shape to prevent undesired rotation of the detachable module **104** about the rail **118** longitudinal axis **130**. The rail **118** cross-sectional shape may be any of a variety of shapes, including noncircular shapes to prevent undesired rotation. For example, in one embodiment, the rail **118** cross-sectional shape is oval, elliptical, square, triangular, or any other non-circular shape. In one embodiment, the rail **118** includes an edge extending along a portion of its longitudinal axis **130**, which prevents rotation of the detachable module **104** about the rail **118**. The module clamp may be provided with complementary clamping surfaces, for conforming to the cross sectional configuration of the rail to permit axial (anterior-posterior) adjustability while resisting or preventing rotation about the axis of the rail.

[0090] In addition, any of a variety of anti-rotational structures may be provided with, or coupled to the rail **118** and the detachable module **104**. For example, the anti-rotational structure can include a high friction surface to provide a friction fit, a locking arrangement, a pin, or any other structure known to those of skill in the art. In other embodiments, the rail **118** has a substantially circular cross-sectional shape and the detachable module **104** includes a suitable structure for preventing rotation of the detachable module **104** about the rail **118** longitudinal axis **130**. For example, the detachable module **104** can include a friction mount, a rubber or elastomeric polymer pad, or other locking mechanism to prevent rotation about the rail **118**.

[0091] The anterior stop **122** and posterior stop **124** define an adjustment length **132** over which the detachable module **104** may be repositioned with respect to the frame **106**. In one embodiment, the adjustment length **132** is at least about one half inch, often at least about an inch, sometimes at least about two inches, and other times at least three inches or more. The

adjustment length **132** defines a range of travel **134** of the detachable module **104** and other components coupled thereto (such as a speaker), as described in greater detail below.

[0092] The rail **118** can be located at any of a variety of locations with respect to the frame **106**. In general, the rail **118** is located in the anterior two-thirds of the earstem **112**. Alternatively, the rail **118** is in the anterior half of the earstem **112**.

[0093] One embodiment of a detachable module **104** is illustrated in FIGS. **5-11**. The detachable module **104** includes a housing **140** and a coupling **142**. The coupling **142** allows the detachable module **104** to be removably connected to the earstem **112** of support **102** of the support assembly **100**. Coupling **142** also provides adjustability of the position and angular orientation of the detachable module **104** with respect to the support **102**.

[0094] The detachable module **104** also includes at least one speaker **144**. The illustrated speaker **144** is adjustably carried by the detachable module **104** may with an arm **146**. The detachable module **104** may also include a port cover **148** to cover a data port as will be described in greater detail below.

[0095] When the support assembly **100** is worn on the wearer's head, the position of the detachable module **104** with respect to the support **102** may be adjusted so that the speaker **144** comfortably resides at least partially over the wearer's ear. Additional details regarding the adjustability of the speaker **144** with respect to the detachable module **104** and the support **102** will be described in greater detail below with respect to FIG. **18** and FIGS. **19-22**. In addition, further multiaxial adjustability structures are disclosed in U.S. patent application Ser. No. 11/022,367, filed Dec. 22, 2004, and U.S. patent application Ser. No. 10/993,217, filed Nov. 19, 2004, the disclosure of which are incorporated in their entireties herein by reference.

[0096] In one embodiment, such as that illustrated in FIG. **5**, a speaker **144** is coupled to an arm **146** at a speaker pivot **150**. The speaker pivot allows adjustment of the position of the speaker **150** with respect to the arm **146**. The arm **146** is coupled to the housing **140** of the detachable module **104** at an arm pivot **152**.

[0097] Arm pivot **152** is any of a variety of mechanical structures able to allow one member to adjust in at least its angular orientation in at least one dimension with respect to another. For example, as illustrated in FIG. **8**, the arm pivot **152** allows inferior and superior movement of the distal end **154** of the arm **144**, thereby adjusting a first arm angle **156**. The first arm angle **156** is generally in the range of from about 3° to 45°, often from about 5° to 25°, sometimes about 10° to 25°, and in some embodiments, greater than at least 10°.

[0098] In addition, the distal end **154** of the arm **146** can be moved in a lateral direction, thereby adjusting second arm angle **158**, as best seen in the view of FIG. **4**. The second arm angle **158** is generally in the range of about 2° to 25°, often about 5° to 15°, and in some embodiments, about 10°.

[0099] In addition, the arm pivot **152** provides rotational movement of arm **146** with respect to the housing **140** of the distal module **104**. For example, in one embodiment, arm pivot **152** allows arm **146** to be rotated at least 180° about the housing axis **160**, as will be described in greater detail below.

[0100] The speaker pivot **150** provides similar adjustability of the speaker **144** with respect to the arm **146**. For example, as illustrated in FIG. **8**, the speaker pivot **150** allows movement of the speaker **144** to a desired first speaker angle **162**. In addition, as illustrated in FIG. **4**, a second speaker angle **164** may also be selected by rotating the speaker **144** about the speaker pivot **150**.

[0101] Adjustability of the detachable module **104** with respect to the support **102**, adjustability of the arm **146** with respect to the housing **140**, and adjustability of the speaker **144** with respect to the arm **146** allow full adjustability and positioning of the position of the speaker **144** with respect to a user's ear when the support assembly **100** is worn by a user. In addition, the adjustability provides improved comfort for the wearer.

[0102] An exploded view of one implementation of detachable module **104** is illustrated in FIG. **12**. The detachable module **104** includes a housing **140**, which includes a first body portion **166** and a second body portion **168**. The housing **140** is formed by attaching the first body portion **166** to the second body portion **168** along a part line, to provide a protective outer wall which defines at least one interior cavity for housing electronics. At least partially inside of the housing **140** are a power module **170**, an electronics module **172**, a data port **174** and a holder **176** that supports a microphone **178**. The body portions **166**, **168** may be made from any of a variety of materials, including plastic or metal. Alternatively, the module **104** can be formed entirely or partially by insert molding or co-molding processes to produce embedded electronics in a unitary or monolithic module.

[0103] The power supply **170** is any of a variety of power structures able to power a detachable module **104**. For example, power module **170** may include a battery, a capacitor, or other power supply.

[0104] The electronics module **172** includes electronics for receiving signals from an external source and providing audio signals to the wearer through the speaker **144**, such as for receiving audio, audio-video or video only signals. As discussed further below, the audio-video or video only signals can be used to drive a video display and optical components, which can include a display such as one of the variety of devices discussed below. In addition, the electronics module **172** may also allow signals received by the electronics module **172** through the microphone **178** to be transmitted to an external receiver. For example, in one embodiment, electronics module **172** includes a Bluetooth transceiver.

[0105] Data port **174** is any port for coupling the detachable module **104** to an external source through a wired or wireless connection. For example, in one embodiment, data port **174** is a mini-USB port, a USB port, a fire wire port, an IEEE 1394 connection port, or any other data port. A holder **176** can be provided to secure the microphone **178** in place. In one embodiment, the holder **176** includes a grommet, such as any of those known to those of skill in the art. In addition, the holder **176** can also include a windscreen to filter wind noise from being received by the microphone **178**.

[0106] Any of a variety of couplings can be utilized with the module **104** of the present invention, for releasably or permanently attaching the module **104** to an eyeglass frame or other support. In many application, releasable connection is preferred. The coupling may be an integral component of the module **104**, or may be attached to the module **104**. In general, the coupling will include at least a first coupling surface for contacting a first surface on the rail or other support from which the coupling will depend, and a second coupling surface for contacting a second surface on the support. The first and second coupling surfaces are generally moveable with

respect to each other, such as to permit positioning the coupling over or around the structure to which it is to be attached, and then tightened to the structure by bringing the first and second coupling surfaces towards each other.

[0107] The configuration of the first and second coupling surfaces, or third or fourth or more, depending upon the design, can be provided with any of a variety of configurations. Normally, the coupling surfaces will be configured in a manner that cooperates with the complementary shape of the rail, earstem, or other component to which they are to be attached.

[0108] In an embodiment of the present inventions in which the module **104** may preferably be attached at the user's choice to either a left earstem or a right earstem of an eyeglass, the coupling is preferably pivotably or otherwise moveably connected to the module **104**, to permit shifting between a "right hand" and "left hand" coupling configuration. Certain specific examples will be given below. Alternatively, in certain embodiments of the invention, a left hand module and a right hand module will be sold as a system, such as for receipt of stereo signals for music, audio/visual sound tracking, or for use in a dual mono system such as cell phone. In this application, the coupling may be permanently mounted to the housing **104**, in an immovable fashion, with a first module **104** adapted for coupling to left earstem and a second module **104** adapted for coupling to a right earstem. Certain specific embodiments of the coupling systems will be described below.

[0109] A coupling **142** in accordance with the present inventions is illustrated in FIG. **13**. In the illustrated embodiment, the coupling **142** includes an upper portion **180**, a lower portion **182**, and a pin **184**. The pin **184** hingably connects the upper portion **180** with the lower portion **182**. A mount **186** attached to or integrally formed with the lower portion **182** provides an attachment mechanism between the coupling **142** and the housing **140** of the distal module **104**. The mount **186** also provides angular adjustability of the housing **140** with respect to the coupling **142**. Additional details regarding angular adjustability in this regard will be discussed in greater detail below.

[0110] The coupling **142** can include any of a variety of locking mechanisms **188** to allow opening and closing of the coupling **142**. The upper portion **180** is movable with respect to the lower portion **182** when the locking mechanism **188** is released. Such moveability of the upper and lower portions **180**, **182** allow the coupling **142** to at least partially surround and enclose a portion of a rail (not shown), such as rail **118** described above.

[0111] In addition, the locking mechanism **188** can be released to remove the coupling **142** from the rail. In other embodiments, locking mechanism **188** loosens the grip of the coupling **142** on the rail so that the detachable module **104** can be slid along the rail, as described in greater detail above.

[0112] In one embodiment, the locking mechanism **188** has two states: a lock state and an open state. In the lock state, the coupling **142** may not be inadvertently moved along the rail under normal use conditions. In the open state, the coupling **142** may be moved along or removed from the rail.

[0113] In another embodiment, the locking mechanism **188** has three states: a lock state, an open state, and an adjust state. The lock and open states are the same as described above. The adjust state allows the coupling **142** to be moved or slid along the rail but does not allow the coupling **142** to be removed from the rail. Another embodiment of a coupling **142** shown in an open state is illustrated in FIG. **14**.

[0114] An exploded view of a speaker support arm **146** is illustrated in FIG. **15**. A bellow **190** is provided over a grill **192**, which at least partially covers speaker **144** over its sound output surface **194**. A vent screen **196** resides between the speaker **144** and a bud **198**. The speaker pivot **150** is formed by two laterally flexible tangs **151** that extend into and provide a rotatable snap fit within the orifice **163** of a boom **165**. A cap **167** covers the tangs **151** of the speaker pivot **150**. A cover **161** is placed between the bud **198** and the boom **165** to cover at least one surface of the boom **165**, and enclose wires leading to the speaker **144**.

[0115] A hub **169** extends through a ring **171** and through the boom **165** where it is pivotably coupled to the mating portion **173** of a base **175**. A pin **177** removably and hingably couples the mating portion **173** to the hub **169** and therefore the boom **165**. The arm pivot **152** is provided by the coupling of the base **175** and hub **169**.

[0116] As discussed previously in connection with FIG. **4**, the speaker and boom assembly may also be rotatably connected to the housing **104** about an axis **160**, which extends in the illustrated embodiment in the anterior/posterior direction. This rotation may be accomplished by the provision of one or more arcuate slots **179**, illustrated in FIG. **15**, for receiving a pin or other complementary structure on the module **104**, to permit rotation through a controlled range of motion as will be apparent to those of skill in the art in view of the disclosure herein.

[0117] In one embodiment, the speaker **144** is a rip curl speaker. In another embodiment, the speaker **144** has an outside diameter of no more than 9 mm, no more than about 11 mm, or about 13 mm or more.

[0118] Referring now to FIG. **16**, the power module **170** can include a battery, such as an ATL501230 battery, as is well known to those of skill in the art. The power module **170** can be coupled to the electronics module **172** with an adhesive **181**. The electronics module **172** can be coupled to micro switches **183** which are accessed by the user by pressing buttons **185**. In one embodiment, the detachable module **104** includes three switches.

[0119] The switches can include any of a variety of switches known to those of skill in the art, including micro switches, snap switches, and dome switches. In one embodiment, the switches **183** are snap dome F06180 switches. The detachable module **104** can have three switches **183**, although any number of switches **183** can be used. An LED **187** provides status indication to the wearer.

[0120] Referring now to FIGS. **17** and **18**, the microphone grommet **176** of the detachable module **104** can be made from any of a variety of materials well known to those of skill in the art, including: PTFE, polyethylene, polyurethane, or TPE. In addition, the grommet **176** can have a hardness or stiffness of about 20 to 30 durometers, about 40 to 50 durometers, about 60 durometers, or about 70 durometers.

[0121] A windscreen can be provided with the grommet **176** to reduce noise. For example, in one embodiment, the windscreen is a Saatifil screen. The microphone **178** can be any of a variety of microphones known to those of skill in the art, including a star microphone, such as microphone Part No. MAA-03A-L60.

[0122] Referring now to FIGS. **19** and **20**, and as discussed above, speaker and arm pivots **150**, **152** allow movement of the speaker **144** and arm **146** with respect to the detachable

module **104** housing **140**. In one embodiment, the first speaker angle **162** over which the speaker **144** may be moved, is up to about 100 degrees. In another embodiment, the first speaker angle **162** is about ±45 degrees with respect to the arm axis **230**. In another embodiment, the first speaker angle **162** is at least about ±5 degrees, sometimes at least about ±20 degrees, and sometimes at least about ±45 degrees.

[0123] In one embodiment, the detachable module **104** can be adjusted so that the speaker, arm, and housing **140** are aligned along the housing axis **160** as illustrated in FIG. **20**.

[0124] Referring now to FIG. **21**, movement of the coupling **142** with respect to the rail **118** over an adjustment length **132** results in a corresponding translation of the detachable module **104** with respect to the support **102**. In addition, movement of the coupling **142** over the rail **118** over the adjustment length **132** or a portion thereof will result in a related movement of speaker **144** with respect to the support **102** and with respect to the wearer's ears. Although FIGS. **21** and **22** show movement of the detachable module **104** over the entire adjustment length **132**, in other embodiments, coupling **142** is used to move detachable module **104** only a portion of the full adjustment length **132**.

[0125] In one embodiment, the coupling **142** is released from the rail or other support by rotating the coupling **142** with respect to the housing **140**. In one embodiment, the housing **140** is rotated at least about 45 degrees and preferably about 90 degrees to release the coupling **142**. By releasing the coupling **142** as illustrated in FIG. **23**, the detachable module **104** may be removed from the support **102**. It may be desirable to remove the detachable module **104** from the support **102** to either change the detachable module **104** with another component, such as another detachable module that provides different functionality, or to mount the detachable module **104** on the opposite earstem **112** of the support **102**.

[0126] To move the detachable module **104** from one earstem **112** of the support **102** to the opposite earstem **112**, the coupling **142** is released, as illustrated in FIG. **24**. The arm **146** is then rotated about the housing axis **160**. In addition, the speaker **144** is rotated about the arm axis **230** as well. In addition, the coupling **142** can be rotated about a coupling axis **232** as well. Additional details regarding the lead positioning of the detachable module **104** from a right earstem **112** to a left earstem **112** are illustrated in FIGS. **25-28**.

[0127] In FIG. **25** a detachable module **104** is shown coupled to the right earstem **112** of a support **102**. The coupling **142** is in its closed position to secure the detachable module **104** to the earstem **112**. In FIG. **26** the detachable module **104** has been rotated with respect to the earstem **112** to release the coupling **142**. The coupling **142** is shown in its open position such that the detachable module **104** can be removed from the earstem **112**. The detachable module **104** is then positioned with respect to the left earstem **112**, as illustrated in FIG. **27**. The speaker **144** has been rotated about the arm axis **230** so that its acoustical output will be directed towards the wearer's ear. Finally, as shown in FIG. **28**, the coupling **142** is pinched closed to lock the detachable module **104** to the left earstem **112** of the support **102**.

[0128] One method **300** of moving a detachable module from one earstem to the other is shown in the flowchart of FIG. **29**.

[0129] At block **302**, the coupler of the detachable module is opened. At block **304**, the detachable housing removed from the rail of the earstem. At block **306**, the housing is rotated with respect to the coupler to put the housing and coupler in position for mounting the detachable housing to the opposite earstem. At block **308**, the arm is rotated about 180 degrees about the housing axis. At block **310**, the speaker is rotated with respect to the arm axis. At block **312**, the coupler is placed over the opposite earstem. At block **314**, the arm angles, speaker angles, and detachable housing position on the rail are adjusted to comfortably position the speaker at least partially over the ear. At block **316**, the coupler is locked onto the opposite earstem rail.

[0130] Another embodiment of a detachable module **200** is illustrated in FIG. **30**. The detachable module **200** includes a coupling **202** and a housing **204**. The coupling **202** includes a clamp assembly **206** that is coupled to a slide **208** with a pin **210**. The pin **210** has a longitudinal axis **211** about which the slide **208** may be rotated with respect to the clamp assembly **206**. The detachable module **200** often also includes an articulating arm or a boom to which an audio input or output device is attached. For example, in some embodiments, the detachable module includes an articulating arm and a speaker, such as the articulating arm described below with respect to FIGS. **39**A-**41**C.

[0131] The clamp assembly **206** includes an inside grip **212**, an outside grip **214**, a resilient, conformable gripping pad **216** (such as best seen in FIG. **31**), a spring **218**, and a release **220**. The release **220** can be any of a variety of structures to open the clamp assembly **206**, including a button, lever, switch, tab, or knob. The clamp assembly **206** allows the detachable module **200** to be removably connected to any of a variety of structures, including the frame of a pair of eyeglasses. Many eyeglass frames have irregular, uneven, or non-uniform earstems, which makes it difficult to attach components to the eyeglasses. However, a universal clamp, such as the clamp assembly **206**, allows the detachable module **200** to be removably connected to any of a variety of eyeglass frame structures, including those having irregular, uneven, and/or non-uniform earstems. Additional details regarding the coupling between the clamp assembly **206** of the detachable module **200** and an eyeglass frame are provided herein.

[0132] An exploded view of one embodiment of a clamp assembly **206** is illustrated in FIG. **32**. The inside and outside grips **212**, **214** of the clamp assembly **206** matingly engage each other over a clamp post **221**. The clamp post **221** can include any of a variety of structures well known to those of skill in the art, including a Mattel pin. A spring **218** surrounds the clamp post **221**. A release **220** is attached to the end of the clamp post **221** using any of a variety of methods, including pressing, gluing, welding, pinning, or screwing the release **220** to the clamp post **221**. The release **220** prevents removal from the spring **218** from the clamp post **221** and allows the inside and outside grips **212**, **214** to be separated apart from one another in order to release the detachable module **200** from the device to which it is attached, such as an eyeglass frame.

[0133] A coupling assembly **202** is formed by attaching the clamp assembly **206** to a slide **208**, as illustrated in FIGS. **33**A and **33**B. The slide **208** can include a male member, such as a rail **222**, or a female member, such as a track **224**, as seen in FIGS. **33**A and **33**B, respectively. The slide **208** matingly engages a corresponding mating surface **226** on the housing **204** of the detachable module **200**. For example, when a male slide **208**, such as illustrated in FIG. **33**A is selected, the mating surface **226** of the housing **204** can be a track **228**, such as illustrated in FIG. **34**A. Similarly, when a female slide **208** is selected, such as illustrated in FIG. **33**B, the corre-

sponding mating surface **226** of the housing **204** can be a rail **230**, such as illustrated in FIG. **34**B.

[0134] The detachable module **200** can be attached to a support **232** as illustrated in FIG. **35**. The support **232** can be any of a variety of wearable items, including a pair of eyeglasses, a hat, belt, ski goggles, etc. The coupling **202** is released by pressing on the release **220**, which causes the inside grip **212** and outside grip **214** to separate and move apart from one another. When the inside and outside grips **212**, **214** are separated, the coupling **202** can be positioned over the earstem **234** of a support **232**. By squeezing the inside and outside grips **212**, **214** together, the detachable module **200** can be secured to the earstem **234** of the support **232** as illustrated in FIG. **47**. The coupling **202** can be secured to the support **232** in any of a variety of locations as desired by the wearer.

[0135] The configuration of the gripping pad **216** can facilitate connectivity between the detachable module **200** and any of a variety of surfaces or shapes of the support earstem **234**. For example, the gripping pad **216** can be made from any of a variety of elastomeric materials, including foams, plastics, or any compliant material that can conform to the shape of the earstem **234** when the coupling **202** is attached thereto. In addition, the gripping pad **216** can have any of a variety of surface shapes and textures, including a flat surface, a wavy surface, a rippled surface, a contoured surface, etc. Gripping pads **216** having a contoured surface are illustrated in FIG. **31**. In addition, the thickness of the gripping pad **216** can be selected to facilitate connectivity between the coupling **202** and the support **232**. In one embodiment, the gripping pad **216** thickness is in the range of about 0.5 mm to 2 mm, about 1 mm to 3 mm, or about 3 mm thick.

[0136] An overmold may be provided on the mating surface **226** of the housing **204** to provide additional friction between the housing **204** and slide **208**. Additional friction may be desired to prevent accidental or undesired movement of the housing **204** with respect to the slide **208**. In addition, the mating surface **226** of the housing **204** can include a detent which prevents the slide **208** of the coupling **202** from unintentionally sliding off of or detaching from the housing **204**.

[0137] The coupling **202** of the detachable module **200** allows the detachable module **200** to be attached to any of a variety of locations on an eyewear on a support **232** frame. For example, in some embodiments, the support **232** includes a pair of eyeglasses having earstems **234** of a non-uniform shape. One example of such earstem **234** is illustrated in FIGS. **36**A and **36**B.

[0138] This ability to move to a variety of positions can allow the detachable module **200** to be adjusted or moved to a desired position in order to maximize the effectiveness of the heads-up display components, as discussed below.

[0139] The detachable module **200** can be moved in anterior and posterior directions with respect to the earstem **234** once the detachable module **200** is attached to the earstem **234**. FIG. **36**A shows the detachable module **200** moved in an anterior direction and FIG. **36**B shows the detachable module **200** moved in a posterior direction. The anterior-posterior travel distance over which the detachable module **200** can be moved with respect to the earstem **234** can be defined by the length of the mating surface **226** of the housing **204** and the length of the slide **208** of the coupling **202**. The travel distance is at least about 0.25 inches, generally at least about 0.75 inches and often at least about 1 inch or 1.5 inches or more. This travel distance, or adjustment length, can be selected to provide adjustability of the detachable module **200**, not only with respect to the earstem **234**, but also with respect to the wearer's ear. An articulating arm, or speaker boom (not shown), is often attached to the detachable module **200** and can include any of a variety of speaker mounts such as though described above or below.

[0140] The angular orientation of the detachable module **200** with respect to the earstem **234** may be adjusted as well. For example, as illustrated in FIGS. **37**A and **37**B, the axial angle **236** formed between the earstem longitudinal axis **238** and the detachable module longitudinal axis **240** may be selected by adjusting the angular orientation of the coupling **202** with respect to the earstem **234** during attachment.

[0141] In addition, a tilt angle **242** in the medial-lateral direction can be selected by rotating the housing **204** of the detachable module **200** about an axis such as pin **210**. The tilt angle **242**, as illustrated in FIGS. **38**A-**38**C, can be at least about plus ±5°, at least about ±10° to 20°, or greater.

[0142] In many embodiments, the detachable housing has an articulating arm **244** such as illustrated in FIGS. **39**A and **39**B. The articulating arm **244** provides an extension from the detachable housing onto which an electrical component, such as a speaker, may be mounted. For example, the articulating arm **244** can include a first segment **246**, a second segment **248**, and a third segment **250** that are connected to each other by any of a variety of couplings well known to those of skill in the art. For example, the coupling can be a ball **252** and socket **254** assembly, such as illustrated in FIG. **39**B.

[0143] The first segment **246** is connected to a housing, such as any of the detachable housings described above, and the second segment **248**. The second segment **248** is connected to the first and third segments **246**, **250**. The third segment **250** is connected at one end to the second segment **248** and at the other end to a speaker (not shown). A conductor or conductor pair (also not shown) extends from the speaker to the detachable housing.

[0144] Although the present embodiment describes an articulating arm **244** coupled to a detachable housing, it should be well understood by those of skill in the art that the articulating arm **244** may instead be attached directly to the earstem of a support, such as a pair of eyeglasses, a helmet, goggle straps or others. In such cases, electronic devices, such as MP3 players, cell phones, wireless transceivers, etc. can be embedded or mounted inside of the eyeglass frame instead of being carried by the detachable housing.

[0145] A side view of one embodiment of an articulating arm **244** is illustrated in FIG. **40**. FIG. **40** illustrates one orientation of the various segments **246**, **248**, **250** of the articulating arm **244** with respect to the housing **204** of a detachable module **200**. Although the articulating arm **244** is shown coupled to the housing **204** of a detachable module **200**, the articulating arm **244** may alternatively be coupled directly to the earstem of a pair of eyeglasses, as discussed above.

[0146] Each of the first, second and third segments **246**, **248**, **250** have a longitudinal axis parallel to a reference axis x, x', x". Each of the reference axes x, x', x" defines one of three dimensions of a reference system for describing the orientation of the particular segment **246**, **248**, **250**. In the illustrated embodiment, the x reference axis is parallel to the longitudinal axis of the first segment **246** and is also perpendicular to a z axis which can define the longitudinal axis of the housing **204** of the detachable module **200**. A third axis y is perpendicular to both the x and z axes.

[0147] A second reference system includes an x' axis that is parallel to the longitudinal axis of the second segment **248** and which can be tangential to an outside surface of the second segment **248**. Similarly, y' and z' reference axes are perpendicular to each other and the x' axis and are parallel to the y and y" axes when the x' axis is oriented parallel to the x axis.

[0148] In addition, an x" reference axis extends parallel to the longitudinal axis of the third segment **250** and is generally tangential to an exterior or an outside surface of the third segment **250**. Similarly, y" and z" reference axes are perpendicular to each other and to the x" axis as well. Like the reference systems described above, the y" axis is parallel to both the y and y' axes when the x" axis is oriented such that it is parallel to both the x and x' axes. Similarly, the z" axis is parallel to both the z and z' axes when the x" axis is oriented parallel to both the x and x' axes. This linear orientation of the articulating arm **244** is illustrated in FIG. **40** where all three reference axes, x, x', x", are oriented parallel to each other.

[0149] The articulating arm **244** can be manipulated in a variety of planes and moved and rotated in a variety of manners to change the distance and angular orientation between the housing **204** of the detachable module **200** and a speaker attached to the third segment **250** of the articulating arm **244**. For example, in one embodiment, the first segment **246** of the articulating arm **244** can rotate freely about the y axis in the xz plane and is limited in its movement only by contact with the housing **204** of the detachable module **200** or by contact with the support **232** (not shown). The first segment **246** can generally rotate about 340°, about 300° to 350°, or at least 325° about the y axis. The second segment **248** can rotate about the y' axis freely, also generally limited only by contact with the housing **204** of the detachable module **200** or by contact with the support. In addition, the second segment **248** can tilt with respect to the x'z' plane. For example, in one embodiment, the second segment **248** can tilt +15°/−0° with respect to the x'z' plane. In other embodiments, the second segment **248** can tilt at least about ±5°, or about ±10° with respect to the x'z' plane.

[0150] The third segment **250** can rotate about the y" axis and is generally limited by the design of the ball **252** and socket **254** joint between the second and third segments **248**, **250**. In one embodiment, the third segment **250** can rotate about ±85° about the y" axis. In addition, the third segment **250** can tilt with respect to the x'z' plane. For example, in one embodiment, the third segment **250** tilts about +0°/−15°, about ±5°, or about ±10° with respect to the x"z" plane.

[0151] By selecting different angular orientations between the various segments, the angular orientation between the speaker **256** mounted on the third segment **250** of the articulating arm **244** with respect to the housing **204** of the detachable module **200** can be adjusted as well. Examples of such adjustments are illustrated in FIGS. **41**A-**41**C. In FIG. **41**A, the second segment **248** is tilted to an angle **151** which is its maximum positive angle with respect to the xz plane, and the third segment **250** is not tilted with respect to the x'z' plane. In such case, the tilt angle between the speaker **256** and the housing **204** is the same as the maximum positive tilt angle **153** of the second segment **248**.

[0152] In FIG. **41**B, the second segment **248** is not tilted, but the third segment **250** is tilted to an angle **153**, which is the maximum negative angle with respect to the xz plane. In such case, the tilt angle **153** between the speaker **256** and the housing **204** is equal to the maximum negative tilt angle of the third segment **250**.

[0153] Finally, in FIG. **41**C, the second segment **248** is tilted to its maximum positive angle and the third segment **250** is tilted to its maximum negative angle with respect to the xz plane. In such case, the angle tilt will be equal to the difference between the max tilt angle of the second segment **248** and the maximum negative angle of the third segment **250**. When the maximum positive tilt angle of the second segment **248** is equal to the maximum negative angle of the third segment **250**, the speaker **256** will generally be oriented about parallel to the xz plane.

[0154] FIG. **42** shows a support assembly **300** in accordance with one embodiment of the present invention. The support assembly is generally any device able to be worn by a user that can carry one or more electronic components thereon. For example, the support assembly **300** can include an article of clothing, such as a hat, a shirt, a belt, jacket, helmet or a pair of eyewear such as goggles or eyeglasses.

[0155] The support assembly **300** generally includes a support **302**, a first detachable module **304**, and a second detachable module **306**. The first and second detachable modules **304**, **306** communicate with each other via a communication link **308**. The detachable modules **304**, **306** can be any of the detachable modules described herein. For example, the detachable modules **304**, **306** can be a housing including electronics for an MP3 player, an audio storage device, a streaming audio signal receiver, a cellular telephone, a Bluetooth transceiver, or any other electrical device for providing audio or video input or output.

[0156] The support **302** is any structure able to be worn by the user such as, for example, a pair of eyeglasses. The communication link **308** is any wired or wireless link able to provide communication between two or more electrical components. For example, the communication link **308** can be a wired link, such as a flexible wire or a preformed wire, which may be permanently connected or unplugable at one or both of its ends. When the communication link **308** is a wire link, it may be unplugable at its ends so that it may be detached from each of the detachable modules **304**, **306**. The communication link **308** can be provided at any location with respect to the support **302**. For example, the communication link **308** can include a wire or conductor located within and/or coupled to the support. For example, the communication link **308** can be a wire that hangs off the back of the support **302**.

[0157] FIG. **43** illustrates one specific embodiment of the support assembly **300**. In the illustrated embodiment, the support assembly **300** includes a pair of eyeglasses as the support **302**. First and second detachable modules **304**, **306** are attached to each of the first and second earstems **310**, respectively, of the support **302**. The detachable modules **304**, **306** are coupled to each other with a wired communication link **308** that in the illustrated embodiment runs along the frame of the support **302**. In one embodiment, the communication link **308** spans or traverses a nose bridge formed between the orbitals of the support **302**.

[0158] The detachable modules **304**, **306**, as described herein, can include any of a variety of electrical components. In some embodiments, the detachable modules **304**, **306** include different components. For example, in one embodiment, the first detachable module **304** carries a cellular telephone, and the second detachable module carries an MP3 player. Alternatively, the first detachable module **304** can include an RF (e.g., Bluetooth) transceiver adapted to communicate with another Bluetooth device, such as a Bluetooth-enabled telephone, and the second detachable module **306**

can include an MP3 player or any other audio or video input or output device. In yet another embodiment, both the first and second detachable modules **304**, **306** include Bluetooth transceivers and/or both include cellular telephones. It will be apparent to those of skill in the art that the support assembly **300** can therefore provide either dual mono or stereo audio for devices, such as telephones, that have historically provided only single-channel audio signals.

[0159] Although the support assemblies **300** are shown in FIG. **43** as having detachable modules **304**, **306**, in other embodiments, the electronic circuitry of the detachable modules **304**, **306** is mounted inside of the support **302** itself. For example, in some embodiments, the electronic devices are mounted inside of the support **302** and the articulated arm described and an articulated arm that is coupled to a speaker is mounted to the support **302** as well. In other embodiments, the electronic components are mounted inside of the articulated arm itself and not inside the articulated arm. In other embodiments, the electronic components are provided inside of the arm and the arm is removably attached to the frame or is removably attached to the support **302**. Finally, in yet other embodiments, such as the embodiment illustrated in FIG. **43**, the electronic components are provided inside of removable modules **304**, **306** which are removably attached to the support **302**. In such cases, the detachable modules **304**, **306** also include articulating arms, such as described herein. Examples of support assemblies having electronic circuitry mounted within the support itself are taught in U.S. application Ser. No. 10/993,217, filed Nov. 19, 2004 and U.S. application Ser. No. 11/022,367, filed Dec. 22, 2004, which are incorporated by reference herein.

[0160] The support assembly **300** can be configured such that the first and second detachable modules **304**, **306** each individually communicate with a cellular telephone. For example, each of the first and second detachable modules **304**, **306** can each include a Bluetooth transceiver adapted to communicate via the Bluetooth protocol with a cellular telephone, or with more than one cellular telephone. Alternatively, in other embodiments, the first detachable module **304** includes a wireless Bluetooth transceiver adapted to communicate with a cellular telephone, and the second detachable module **306** includes the mechanical and electrical components for supporting and positioning and powering a speaker that is in communication with the electronics of the first detachable module **304**. In such case, communication from the cellular telephone is received by the first detachable module **304** and audio signals are provided to a user's first ear by a speaker coupled to the first detachable module **304** and audio signals from the cellular telephone are provided to the wearer's second ear via a speaker coupled to the second detachable module **306** that is in communication with the first detachable module **304**.

[0161] The support assembly **300** of the present inventions can include any of a variety of additional features for improving and enhancing usability by a wearer. For example, the support assembly **300** can include software that provides the wearer with oral and/or visual popdown-type menus for navigating through the multitude of commands that may be available. For example, by providing voice control over system functionality, the user need not manipulate mechanical buttons, switches or controls on the support assembly **300** in order to select different support assembly communication, audio, video functions. Further, providing visual or video illustration of system commands and status can aid the wearer in navigating and operating the assembly.

[0162] In addition, the support assembly **300** can include noise cancellation hardware and/or software to reduce or eliminate noise provided to the wearer of the support assembly **300** during use and communication. In addition, in some embodiments, the support assembly **300** includes a bone conduction microphone to transfer audio information from the wearer. These features are well known to those of skill in the art.

[0163] As discussed above, the detachable module can house electronics such as those for an MP3 player, an audio storage device, a streaming audio signal receiver, a cellular telephone, a Bluetooth transceiver, or any other electrical device for providing audio or video input or output, such as an audio recorder, a speaker, a camera, video recorder, video player, and/or video display. These features can be integrated into the player individually or in combination or collectively to provide multi-function capability. Further, the module can provide wireless connectivity with one or more remote devices to stream data to or from the remote device(s).

[0164] In some embodiments, the module can comprise visual display and/or optical components. These components can include a display such as a liquid crystal display (LCD), a plasma display, a semiconductor device (LD), a light-emitting diode (LED), an organic light emitting diode (OLED), active OLED, AMOLED, super AMOLED, a projector, direct retinal projection through virtual retinal display (VRD) or retinal scan display (RSD) using a retinal projector (RP), micro-electro-mechanical systems display, an electroluminescence (EL), a cathode ray tube (CRT), a digital micromirror device (DMD), prism(s), lens(es), fiber-optic transmission component(s), mirror(s), a holographic optical element (HOE), laser projection, 3D display components or circuitry, or another emissive, transmissive, or reflective display technology, or the like is preferably used. The system can produce real or virtual images for user perception. Further, the system can provide augmented visuals of natural objects perceived by the user.

[0165] The viewing plane for the system can be on a lens of the eyewear (goggles or eyeglasses) or spaced from the lens (either in front or behind the lens). The viewing plane can be real or virtual. Further, the system and/or eyewear can also comprise variable light attenuation features (e.g. electronic variable light attenuation) in the lens(es) or otherwise to enhance video display perception. The viewing plane can incorporate one or more display and/or light attenuation components.

[0166] For example, various such video input and output devices, components, circuitry, methods, and structures are disclosed in the following U.S. Patent and Publication Nos. and can be incorporated into embodiments of the system disclosed herein: U.S. Publication No. 2005/0219152 (disclosing a microdisplay with virtual image and an adjustable boom), U.S. Publication No. 2009/0015929 (disclosing a substrate guided relay), U.S. Publication No. 2010/0111472 (disclosing a substrate guided relay), U.S. Publication No. 2010/0053591 (disclosing image projection technology), U.S. Publication No. 2009/0180195 (disclosing heads-up display and imaging systems), U.S. Publication No. 2011/0043644 (disclosing devices and methods for providing localized image enhancements in a heads-up display), U.S. Pat. No. 7,740,353 (disclosing a direct retinal projection heads-up display), U.S. Pat. No. 7,639,209 (disclosing struc-

tures and methods related to retinal projection), U.S. Pat. No. 7,631,968 (disclosing devices for heads-up displays), U.S. Pat. No. 7,249,846 (disclosing a heads-up display device), U.S. Pat. No. 7,192,137 (disclosing heads-up display devices), U.S. Pat. No. 7,158,096 (disclosing heads-up display and transmission devices), U.S. Pat. No. 7,023,621 (disclosing images superimposed on field of view), U.S. Pat. No. 5,369,415 (disclosing direct retinal projection), U.S. Pat. No. 5,596,339 (disclosing retinal display using a fiber optic point source), the entireties of each of which are incorporated herein by reference.

[0167] Referring now to FIGS. **44-49**, various eyewear are illustrated in which embodiments of the system are utilized to provide a heads-up display. The above discussion of the interchangeability, articulation, and structure(s) of above-noted embodiments of the module will not be repeated here for brevity, but further embodiments discussed in FIGS. **44-49** will be understood to be capable of providing the interchangeability, articulation, and structure(s) of those embodiments discussed above. Thus, in some embodiments, a module having a mechanical clamp can be provided with visual display capabilities. Further, in some embodiments the module can be adjustable in three dimensions (XYZ adjustability) to adjust a position of a heads-up display device. Further, in any of the embodiments discussed herein, a heads-up display can comprise one or more display units or devices to provide visual information for one or both eyes of the wearer, whether the eyewear comprises a unitary or dual lens system.

[0168] Further, the module can include one or more articulation mechanisms, such as an articulating arm, to allow adjustable positioning of a visual display device and/or and earphone relative to the module. Thus, some embodiments of the modules can incorporate audio or video input or output devices that can be manually adjustable to allow the user fine adjustment to optimize the position of an audio or visual input or output of the module(s).

[0169] For example, in FIG. **44**, an embodiment of a module **400** incorporating a heads-up display is shown. As with other embodiments discussed herein, the module **400** can incorporate onboard electronics that are configured to drive a visual display **402** that can be coupled to the module **400**. The module **400** can include memory and/or a transceiver configured to send and receive data signals that can be used to provide a visual output through the visual display **402**. As discussed above, the module **400** can be removably connected to eyewear, such as to an ear stem **404** of an eyeglass **406**, as shown.

[0170] Further, the visual display **402** can be interconnected with the module **400** with an articulating arm **410**. The articulating arm **410** can comprise any of the structures or capabilities such as those discussed in U.S. Pat. No. 7,740,353, the entirety of which is incorporated herein by reference. As illustrated, the visual display **402** can provide or define a viewing surface or plane **412** at which an image can be displayed and spaced from the wearer's eye. The embodiment shown in FIG. **44** illustrates that the viewing device **412** can be positioned anteriorly relative to a lens of the eyewear. In some embodiments, the viewing device **412** can be adjustable such that it can be spaced at least about 2 inches and/or less than or equal to about 7 inches from the wearer's eye. Further, the viewing device **412** can be spaced at least about 3 inches and/or less than or equal to about 5 inches from the wearer's eye. Further, the viewing device can be adjustable within a radius of at least about 1 inch and/or less than or equal to about 4 inches from the wearer's straight ahead line of sight **418**.

[0171] FIG. **45** illustrates another embodiment of a module **420** that is capable of providing a heads-up display for an eyeglass **422**. Similar to the module **400** discussed above in FIG. **44**, the module **420** can provide a visual display **430** having or defining a viewing device **432** that can be interconnected with the module **420** by an articulating arm **434**. This embodiment illustrates that the viewing device **432** can be positioned posteriorly relative to a lens of the eyewear. As with the embodiment shown in FIG. **44**, the viewing device **432** can also be adjusted within a desirable range per wearer specification.

[0172] In addition, the viewing devices **412**, **432** can be configured as a display surface or as a beam projector for retinal projection. As noted above, the viewing devices **412**, **432** can be adjusted relative to the eyewear in order to allow a viewing plane to be provided in front of or behind a lens of the eyewear. Further, the viewing devices **412**, **432** can define a real or virtual viewing plane.

[0173] In addition, the articulating arms **410**, **434**, the visual displays **402**, **430**, and/or components thereof can be configured to provide movement along and/or rotation about all three dimensional axes. For example, the visual displays **402**, **430** can be configured to tilt (rotation about the x-axis), roll (rotation about the z-axis), or pivot (rotation about the y-axis), as well as to move in the direction of any of the x, y, or z axes. This movement can be accomplished through the use of, for example, ball and socket joints, pivot joints, bendable, moldable, or pliant materials, telescoping components, and the like. Further, the articulating arms **410**, **434**, the visual displays **402**, **430**, and/or components thereof can be configured to be constrained from movement along and/or rotation about one or more of the three dimensional axes. In some embodiments, one or more degrees of movement can be restrained while permitting movement in another degree(s) of movement.

[0174] FIG. **46** illustrates an embodiment of a module **440** that can be configured to drive an optical device **442** that is positioned on, embedded within, or provided as a lens **444** of eyewear, such as an eyeglass **446**. This embodiment illustrates that a viewing surface or plane can be positioned along a surface of the lens of the eyewear.

[0175] The optical device **442** can comprise one or more visual display units. The visual display unit can comprise a thin display device, such as an OLED display or otherwise, which can provide a real or virtual image for the wearer. The optical device **442** can also incorporate light attenuation technology, such as electronic variable light attenuation. In some embodiments, the optical device **442** can be fitted onto a front or rear surface of the lens **444** to provide a permanent or removable engagement with the lens **444**. The optical device **442** can be interconnected with the module **440** by a conduit **450**. The conduit **450**, as with other conduits used for articulating arms of embodiments discussed above, can comprise optical fiber(s) and/or data cable(s) and the like to drive the optical device **442**. The conduit **450** can be interconnected with the eyewear using a jack for transmitting data

[0176] FIG. **47** illustrates another embodiment of a module **460** in which the module is used to drive one or more display devices **462**. The module **460** can be interconnected with the display device(s) **462** using a conduit **470**. As with other conduits discussed herein, the conduit **470** can be interconnected with the eyewear using a jack for transmitting data.

[0177] Similar to the embodiment illustrated in FIG. **46**, the display devices **462** can be positioned on, embedded within, or provided as at least a portion of a lens **464**, **466** of the eyewear. In this embodiment, the display device **462** can comprise a projector operative to provide retinal projection. With regard to the placement of the display device, for example, the display device **462** can be positioned at any variety of locations on the lens **464**. In some embodiments, the display device **462** can be positioned relative to the straight ahead line of sight within a range of acceptance. For example, the display device **462** can be positioned at least about 0.25 inches and/or less than or equal to about 2 inches from the point at which the wearer's straight ahead line of sight passes through the lens **464**. Further, the display device **462** can be positioned along a lower half of the lens **464**.

[0178] The embodiments illustrated in FIGS. **46-47** also illustrate that a removable module can be used with eyewear that is pre-fitted with visual display equipment. For example, the lens(es) of the eyewear can be provided with visual display device(s) that can provide a display for the user by utilizing electronics, memory, power, and/or data from the module.

[0179] Thus, in some embodiments, the module can be removed or mounted onto the eyewear such that the wearer can enjoy the benefit of certain audio and/or visual functions, data, and/or interactive capabilities. Embodiments can be provided in which a plurality of modules can be interchanged with eyewear in order to manipulate or change the functionality of the eyewear. For example, some modules can be preloaded to support gaming activities, such as by allowing the eyewear to access and/or play video, memory, and/or wireless connectivity with other devices. Further, some modules can he configured to receive interchangeable memory cards, such as SD cards and the like, which can allow the module to access different programs or memory, as understood by those of skill in the art.

[0180] FIG. **48** illustrates another embodiment of a module **480** in which the module comprises an electronic interconnection device **482**. In this embodiment, a clip **484** of the module **480** can be used to not only mount the module **480** onto the eyewear, but can also electronically couple the module **480** with the eyewear. For example, and the ear stem **490** of the eyewear can comprise one or more connection points **492** which extend partially or across the entire length of the ear stem. The electronic interconnection device **482** can be electronically coupled with the connection point **492** when the clip **484** is moved to a closed position in which the module **480** is mounted onto the ear stem **490**. Such an embodiment can minimize the presence of conduit or wiring visible on the eyewear. Further, conduit or wiring can be provided that extends intermediate the connection point **492** and one or more display devices of the lens(es).

[0181] Some embodiments of the module disclosed herein can also provide image stabilization. The module can comprise an accelerometer device configured to detect movement of the eyeglass. In response to an output of the accelerometer, the module can correspondingly adjust the placement or location of an image or visual produced for the wearer. In general, bouncing or shaking of eyewear is not detected wearers when used in vigorous activities because the lens(es) is transparent and movement of the lens relative to the eye is generally imperceptible. However, wearers using an embodiment of the module providing a visual display could see a shaky display during in a vigorous activity. Thus, some embodiments disclosed herein enable the module to account for shaking or vibration of the eyeglass to ensure that the image or visual display is generally stabilized relative to the straight ahead line of sight of the wearer. Thus, the wearer may detect very little movement of the image or visual display even though the eyeglass is shaking or vibrating during use. Further, the image stabilization can be utilized for displaying or recording an image using the display device(s) or image recording device (s). Various methods and apparatus is have been disclosed for providing optical and/or mechanical image stabilization, such as U.S. Publication Nos. 2011/0013283, 2010/0118402, 2009/0213236, 2009/0128700, 2009/0040361, 2008/0246694, and U.S. Pat. Nos. 7,893,965, and 7,856,173, the entireties of each of which are incorporated herein by reference.

[0182] In some embodiments, the module can comprise one or more hardware and/or software components for managing which of a plurality of data sources is connected to the wearable device. In some embodiments, one or more audio-visual data sources can provide audio input through a speaker, and video input through either opaque or see through heads-up display technology which can be incorporated into eyeglasses, helmets or other headwear.

[0183] A variety of other data sources are known, which require some form of audio or video input to a user, such as display screens on personal digital assistants, Blackberry® type communication devices, and others.

[0184] Each of the foregoing devices require an interface for providing audio or visual data to the user, and, where relevant, for receiving audio information from the user for inputting into the device. At the present time, the use of multiple data sources requires the user to switch between any of a variety of user interfaces, in accordance with the particular device sought to be used at a particular time.

[0185] There remains a need for better management of input signals from multiple data sources, which will allow the user to more conveniently select input from any of a variety of sources.

[0186] In accordance with a further aspect of some embodiments, there is provided a wearable electronically enabled interface system, for providing audio and or video input to the wearer from at least two sources. The system comprises a wearable support, for carrying at least a portion of the interface. At least one data port is carried by the support, for receiving data from at least a first and optionally a second source. A selector is provided, enabling the wearer to direct data from a desired one of the first and second sources to the interface.

[0187] The wearable support may comprise an eyeglass frame, a goggle frame, a helmet, or other user-wearable support structure. The data port may comprise a radiofrequency receiver or transceiver. The interface may comprise at least one speaker, and, in certain implementations, the interface comprises two speakers. The interface may additionally comprise at least one microphone. The interface may further comprise a video display. The selector may comprise a wearer activated control such as a button, switch or voice activated electronic control.

[0188] A modification of an audio device **510** is illustrated in FIG. **49**, and referred to generally by the reference numeral **510**A. Components of the audio device **510**A that are the same as the audio device 10 discussed in U.S. Application Publication No. 2006/0132382 (the entirety of which is incor-

porated herein by reference) have been given the same reference numeral, except that a letter "A" has been added thereto.

[0189] In the illustrated embodiment of the audio device **510**A, the support **512**A is in the form of an eyeglass **540**. The eyeglass **540** comprises a frame **542** which supports left and right lenses **544**, **546**. Although the present audio device **510**A will be described with reference to a dual lens eyeglass, it is to be understood that the methods and principles discussed herein are readily applicable to the production of frames for unitary lens eyeglass systems and protective goggle systems as well. Further, the lenses **544**, **546** can be completely omitted. Optionally, at least one of the lenses **544**, **546** can be in the form of a view finder or a video display unit configured to be viewable by a wearer of the support **512**A.

[0190] An internal cavity **575**, in the illustrated embodiment, is configured to receive electronics such as a printed circuit board **576**. In the illustrated embodiment, the printed circuit board **576** includes one switch for each of the buttons **573***c*, **573***d*, and **573***e*. Additionally, the printed circuit board **576** can include an audio and/or video file storage and playback device **577**.

[0191] The device **577** [as shown in FIG. **50**] can be configured to store and playback any desired type of electronic audio and/or video file. In the illustrated embodiment, the device **577** includes a memory, an amplifier, and a processor. The memory, amplifier, and the processor are configured to operate together to function as an audio storage and playback system. For example, the audio storage and playback system can be configured to store MP3 files in a memory and to play back the MP3 files through the speakers **514**A', **516**A'. Suitable electronics for enabling and amplifying MP3 storage and playback are well known in the art, and may be commercially available from Sigmatel, Inc. or Atmel, Inc. Thus, further description of the hardware and software for operating the device **286** as a storage and playback device is not necessary for one of ordinary skill in the art to make and use the inventions disclosed herein.

[0192] Advantageously, the printed circuit board **576** also includes or is in electrical communication with a data transfer port **578**. In the illustrated embodiment, a housing **579** includes an aperture (not shown) disposed in a position similar to the position of the aperture **272** on the housing **250** (as discussed in U.S. Application Publication No. 2006/0132382, the entirety of which is incorporated herein by reference). In the housing **579**, however, the aperture is aligned with the data transfer port **578**. Thus, when the printed circuit board **576** is received in the internal cavity **575**, the data transfer port **578** can be aligned with the aperture.

[0193] As illustrated in FIG. **51**, an audio device **510**C can be worn on the head **518** of a user U. Preferably, the audio device **510**C is configured to provide one or two-way wireless communication with a source device, or the source device can be incorporated into the audio device **510**C. The source device can be carried by the user U, mounted to a moveable object, stationary, or part of a local area or personal area network.

[0194] The user U can carry a "body borne" source device B such as, for example, but without limitation, a cellular phone, an MP3 player, a "two-way" radio, a palmtop computer, or a laptop computer. As such, the user U can use the audio device **510**C to receive and listen to audio signals from the source device B, and/or transmit audio signals to the source device B. Optionally, the audio device **510**C can also be configured to transmit and receive data signals to and from the source device B, described in greater detail below.

[0195] Optionally, the device B can also be configured to communicate, via long or short range wireless networking protocols, with a remote source R. The remote source R can be, for example, but without limitation, a cellular phone service provider, a satellite radio provider, or a wireless internet service provider. For example, but without limitation, the source device B can be configured to communicate with other wireless data networks such as via, for example, but without limitation, long-range packet-switched network protocols including PCS, GSM, and GPRS. As such, the audio device **510**C can be used as an audio interface for the source device B. For example, but without limitation, where the source device B is a cellular phone, the user U can listen to the audio output of the cellular phone, such as the voice of a caller, through sound transducers in the audio device **510**C. Optionally, the user U can send voice signals or commands to the cellular phone by speaking into a microphone on the audio device **510**C, described in greater detail below. Thus, the audio device **510**C may advantageously be a receiver and/or a transmitter for telecommunications.

[0196] In general, the component configuration of FIG. **51** enables the audio device **510**C to carry interface electronics with the user, such as audio output and audio input. However, the source electronics such as the MP3 player, cellular phone, computer or the like may be off board, or located remotely from the audio device **510**C. This enables the audio device **510**C to accomplish complex electronic functions, while retaining a sleek, low weight configuration. Thus, the audio device **510**C is in communication with the off board source electronics device B. The off board source device B may be located anywhere within the working range of the audio device **510**C. In many applications, the source electronics B will be carried by the wearer, such as on a belt clip, pocket, purse, backpack, shoe, integrated with "smart" clothing, or the like. This accomplishes the function of off loading the bulk and weight of the source electronics from the headset.

[0197] The source electronics B may also be located within a short range of the wearer, such as within the room or same building. For example, personnel in an office building or factory may remain in contact with each, and with the cellular telephone system, internet or the like by positioning transmitter/receiver antenna for the off board electronics B throughout the hallways or rooms of the building. In shorter range, or personal applications, the out board electronics B may be the form of a desktop unit, or other device adapted for positioning within relatively short (e.g. no greater than about 10 feet, no greater than about 20 feet, no greater than about 50 feet, no greater than 100 feet) of the user during the normal use activities.

[0198] In all of the foregoing constructions of the invention, the off board electronics B may communicate remotely with the remote source R. Source R may be the cellular telephone network, or other remote source. In this manner, the driver electronics may be off loaded from the headset, to reduce bulk, weight and power consumption characteristics. The headset may nonetheless communicate with a remote source R, by relaying the signal through the off board electronics B with or without modification.

[0199] Optionally, the audio device **510**C can be configured to provide one or two-way communication with a stationary source device S. The stationary source device can be, for

example, but without limitation, a cellular phone mounted in an automobile, a computer, or a local area network.

[0200] One embodiment of an input data management system **600** in accordance with the present inventions is schematically illustrated in FIG. **52**. The data management system **600** includes a wearable electronic interface **601** for providing data from one or more selected data sources to the wearer. The interface **601** is in communication with a primary data source **602** and optionally at least one secondary source **604**. Communication between the primary source **602** and any secondary source **604** and the interface **601** is accomplished via at least one communication link **606**. In one embodiment, the wearable electronic interface **601** is in communication with one, two, three, or n secondary sources **604**.

[0201] In general, the data input management system is configured to allow a user to select one or more data sources, to be placed either simultaneously or one at a time into electrical communication with a single user interface. This allows the wearer to obtain the benefits of multiple input sources, without the need to replace or make any changes to the interface. As will be discussed in greater detail below, the user may select only a single data source for connection to the interface. Alternatively, the user may select one source as a primary input source and a second source as the secondary input source. The interface may toggle between the input sources, to provide input to the user either automatically, or in response to demand by the user or other electronic prioritization system.

[0202] The primary source **602** and secondary source **604** may be any source, conduit, or provider of audio, video or audio/video information selected by the wearer or by the manufacturer. The examples identified below will therefore be designated generically as source electronics. For example, the source electronics may include a computing device, such as a computer, a server, a network, drive, RAM, ROM or other non-removable or removable memory chip.

[0203] The source electronics may alternatively comprise a digital audio player, such as an mp3 player, an IPOD®, or a multimedia player such as a portable DVD player where the audio track is to be routed to the support.

[0204] Any of a variety of current electronic devices can be converted into wireless source electronics for use in the present system. For example, a device such as a portable DVD player is conventionally provided with internal speakers and a headphone jack for enabling wired connection to an external headphone. The portable DVD player can be converted for use as a source in the system of the present inventions by providing a Bluetooth or other radio frequency transmitter and power supply in a small housing, provided with an externally projecting plug of a size corresponding to the earphone jack. The converter can be plugged into the external earphone or external speaker jack of any conventional source of electrical signal, and convert the source into a Bluetooth or other RF enabled signal source for use with the interface with the present invention.

[0205] The source electronics may be a microphone or a radio, such as a terrestrial-based or satellite-based radio, including XM® or SIRIUS® brand satellite radios. In other embodiments, the source electronics may be a telephone, a cellular telephone, a personal digital assistant (PDA), a BLACKBERRY®, or a pager. A variety of currently available devices, for example, a BLACKBERRY®, pager, any of a variety of PDA's and e-mail enabled devices such as notebook computers provide incoming text messages. In one aspect of the present inventions any of these text message devices is provided with text to voice software, enabling the text to be read out loud. This enables the user to listen to a primary source such as music, or the sound track from a portable DVD player, and incoming e-mails will be read out loud to the wearer, while the primary source is either placed on pause, or remains running in the background. Text to voice software can either be carried by the support, or carried by the underlying source such as the BLACKBERRY® or other PDA.

[0206] The source electronics may be external to the wearable electronic interface **601**, as illustrated in FIG. **52**, in which case the communication link **606** may either be a direct electrical coupling (for example hard wiring, or inductive coupling through the body), or wireless.

[0207] Wireless source electronics may be infrared enabled or radiofrequency-communication enabled, such as BLUETOOTH enabled. For example, in one embodiment, the source includes a BLUETOOTH enabled cellular telephone, although any of the source electronics described herein may be radiofrequency-communication enabled.

[0208] The source electronics may alternatively be carried by or internal to (carried in a cavity or alternatively embedded within) the wearable electronic interface **601**. For example the primary source **602** may include a digital audio player, such as an mp3 player or other memory device, which is attached to or located within the frame of a pair of eyeglasses. Electronically-enabled eyewear as a wearable electronic interface **601** is described in greater detail herein. The secondary source may be a cell phone, GPS device or other external device which is in radio communication as needed, with the interface. The primary and secondary sources can both be completely contained on the wearable interface, such as built into or carried by a pair of eyewear.

[0209] The source electronics may provide substantially discrete packets of information, or may provide a substantially continuous stream of information to the wearable electronic interface **601**. Information packet sizes may be varied depending upon the communication link **606** used to transfer information from the source to the wearable electronic interface **601**.

[0210] In further embodiments, the source electronics may include a video source, or an audio/video source. For example, in one embodiment, the source includes a camera for real time viewing of a remote location or viewing direction, or a video playback device such as a DVD or VCR or solid state video storage device. The source electronics may alternatively be a tuner, a television receiver, or any other device capable of providing a signal indicative of still or moving images. In one embodiment, the primary source **602** provides a photograph, a video clip, an email, a videomail or a voicemail message in accordance with any of the embodiments described herein.

[0211] Any of the source electronics identified above can be selected as the primary source **602** or secondary source **604**. The secondary source **604** communicates with the wearable electronic interface **601** via a communication link **606** as well. Secondary source **604** and primary source **602** may also include any content source **302** described in greater detail below with respect to FIG. **54**.

[0212] The communication link **606** is any device, technology or information conduit for providing communication between two or more electronic components. For example, in one embodiment, the communication link **606** includes a physical connection, such as a wire, cable, fiberoptic cable, or

trace on a PC board. Such communication links **606** include USB, serial, RS-232, IEEE-1394, and FIREWIRE cables.

[0213] In another embodiment, the communication link **606** includes a wireless coupling, such as radiofrequency (RF), infrared (IR), acoustic, or optical coupling. Such communication links **606** include BLUETOOTH and other wireless communications protocols and their associated hardware, as is well known to those of skill in the art. Communication link **606** includes any communications link **306** described in greater detail below with reference to FIG. **54**.

[0214] Referring again to FIG. **52**, in one embodiment, the system **600** comprises a wearable electronic interface **601**. In one embodiment, the wearable electronic interface **601** is any electronic device that may be worn by a wearer, and that provides an interface between an information source, such as primary source **602** and secondary source **604**, and the wearer.

[0215] In one embodiment, the wearable electronic interface **601** is electronically enabled eyewear including audio, video or audio-video interface capabilities such as described in greater detail elsewhere herein. However, wearable electronic interface **601** may be any wearable device, and may be in the form of any wearable support structure, including a wristwatch, armband, jewelry, headwear and clothing. Examples of such wearable electronic interface **601** clothing include headphones, ear phones, a hat, helmet, goggles, mask, visor, headband, hair band, shirt, scarf, sweater, jacket, belt, pants, vest, etc.

[0216] The wearable electronic interface **601** generally includes a data port **608**, a selector **610**, and an audio output **612**. In addition, in some embodiments, the wearable electronic interface **601** further includes a video output **614**, an audio input **616**, and/or a video input **618**.

[0217] The data port **608** is any device capable of receiving information from a primary source **602** (or secondary source **604**) via its associated communication link **606**. For example, in one embodiment, the data port **608** is a physical connector such as a mini-USB connector depending upon the nature of the communication link **606**. In such embodiment, the primary source **602** or secondary source **604** might be coupled to the wearable electronic interface **601** via a USB cable having a mating mini-USB connector on at least one of its ends. In another embodiment, the data port **608** includes a wireless transceiver for providing wireless communication between the primary source **602** (or secondary source **604**) and the wearable electronic interface **601**. For example, in one embodiment, the data port **608** includes a BLUETOOTH receiver or transceiver. The data port **608** includes any data port **308** described in greater detail below with respect to FIG. **22**.

[0218] In one embodiment, the data port **608** is able to communicate with multiple source devices **602**, **604**, either simultaneously, sequentially or serially. For example, in one embodiment, the data port **608** is a BLUETOOTH transceiver that is configured to communicate with more than one BLUETOOTH enabled source device (e.g., a telephone and an mp3 player).

[0219] Outputs from data port **608** are provided to a selector **610**, which selects the source to be provided to the wearer of the wearable electronic interface **601** at any particular time. The selector **610** may be any of a variety of switching devices suitable for switching between multiple electronic input sources.

[0220] The selector **610** may include a mechanical, electrical, or an electro-mechanical switch. For example, in one embodiment, the selector **610** includes a manually operable control such as a toggle switch, a rocker switch, a jumper, a dial, a button, a knob, or a combination thereof. In another embodiment, the selector **610** includes an electronically operable control such as a transistor, a bank of transistors, a relay, a circuit, logic, a RAM, a ROM, a PLD, an EPROM, an EEPROM, a microprocessor, a microcontroller, a multiplexor, a demultiplexor, or a combination thereof. In addition, the selector **610** may be a voice-activated switch, or a voice-activated control that controls selection between primary and secondary sources **602**, **604** based upon verbal commands provided by the wearer.

[0221] The selector **610** may also be coupled to an audio output **612**, a video output **614**, an audio input **616**, and a video input **618** depending upon the desired functionality of the system. The audio output **612** includes any device suitable for providing an audio signal to the wearer of the wearable electronic interface **601**. For example, the audio output **612** may include a speaker, including a bone conduction speaker, a buzzer, a beeper, an alarm, or any other device that produces an audible signal.

[0222] The selector **610** may be located on the wearable electronic interface **601**, or may be remote from it. For example, in one embodiment, the wearable electronic interface **601** includes a pair of electronically enabled eyeglasses, and the selector **610** comprises a manually activated control such as a button or touch pad located on an earstem, an orbital or the bridge, or on a remote associated component such as the cell phone or a wristwatch. Any other wearable electronic interface **601** or selector **610** location may be utilized.

[0223] The video output **614** includes any device suitable for providing a video signal to the wearer of the selector **610**. For example, in one embodiment, the video output **614** includes a light, a lamp, an LED, or any of a variety of image displays such as a screen, a display, a monitor, a head-mounted display, or any other device that produces a visible signal or image.

[0224] The audio input **616** of the wearable electronic interface **601** includes any device suitable for converting an audible signal into an electronic signal that can be processed or carried by the wearable electronic interface **601**. For example, in one embodiment, the audio input **616** includes a microphone, including a bone conduction microphone.

[0225] The video input **618** of the wearable electronic interface **601** includes any device suitable for converting an image, or visual information into an electronic signal that can be processed or carried by the wearable electronic interface **601**. For example, in one embodiment, the video input **618** includes a camera, a still camera, or a video camera. See generally U.S. Pat. No. 6,349,001 to Spitzer, entitled Eyeglass Interface System, the disclosure of which is incorporated in its entirety herein by reference.

[0226] In one embodiment, during operation, the wearer of the wearable electronic interface **601** manually selects which input source **602**, **604** is placed in communication with the interface output. The wearer can switch input sources by activation of the selector at any time. In another embodiment, the wearable electronic interface **601** automatically selects the particular input source **602**, **604** for communication based upon a prioritization schedule configured by the wearer.

[0227] In one embodiment of manual selection operation, the primary source **602** coupled to the wearable electronic

interface **601** is an mp3 player, and the secondary source **604** is a BLUETOOTH enabled cellular telephone. In this embodiment, the wearer listens to mp3 audio provided by the primary source **602** through audio output **612** (e.g., speakers) coupled to the wearable electronic interface **601**. Various embodiments of such wearable electronic interfaces **601** containing or carrying mp3 or other digital audio players are discussed in greater detail herein.

[0228] In manual selection operation, when a telephone call is received via a secondary source **604**, the secondary source **604** sends a signal or an alarm to the wearer to inform the wearer that an incoming call is occurring. The signal or alarm may be an audio signal provided by the audio output **612**, it may be a visual signal, such as a flashing light, provided by the video output **614**, a conventional vibrator or cell phone "ring" or it may be a combination of signals. In one embodiment, the signal includes caller identification information.

[0229] If the wearer determines that he would like to answer the incoming telephone call, the wearer activates the selector **610** using any mechanism described above. For example, in one embodiment, the wearer presses a button on the selector **610** to accept the incoming call from the secondary source **604**, and to simultaneously pause, stop, mute, or partially decrease the playback volume from the primary source **602**.

[0230] When the selector **610** is activated, information from the secondary source **604** is provided through the associated communication link **606** and data port **608** to the selector **610**. The selector **610** routes the communication from the secondary source **604** to the audio output **612** so that the wearer can hear the incoming call without having to remove or adjust the wearable electronic interface **601**.

[0231] In addition, the selector **610** includes sufficient logic to know that when an incoming telephone call is being received from a source **602**, **604**, the audio input **616** (e.g., microphone) of the wearable electronic interface **601** will be activated to provide communication from the wearer back to the secondary source **604**. Similarly, if the source electronics selected by the user carries video signals, the selector **610** additionally activates the video display carried by the eyeglasses or other support structure. If the source electronics selected by the user or automatically by the selector **610** includes only an audio signal, the microphone and video display, if present, remain dormant.

[0232] When the telephone call is terminated, the wearable electronic interface **601** may be configured to resume playback of the mp3 file, to increase the playback volume to previous levels, or to take no further action. The wearer may customize wearable electronic interface **601** operation as desired.

[0233] With reference to FIGS. **51**, **53**A, and **54**B, in another embodiment, the audio device **510**C is advantageously adapted to support any of a variety of portable electronic circuitry or devices which have previously been difficult to incorporate into conventional headsets due to bulk, weight or other considerations. For example, but without limitation, the electronics are digital or other storage devices and retrieval circuitry such as for retrieving music or other information from MP3 format memory or other memory devices. The audio device **510**C can carry any of a variety of receivers and/or transmitters, such as transceiver **630**. For example, but without limitation, the audio device **510**C can carry receivers and/or transmitters for music or for global positioning. In another example, the audio device **510**C can carry receivers and/or transmitters for telecommunications (e.g., telecommunications devices). As used herein, the term "telecommunications devices" is intended to include telephone components as well as devices for communicating with a telephone. For example, "telecommunications devices" can include one or more transceivers for transmitting an audio signal to a cellular phone to be transmitted by the cellular phone as the speaker's voice, and/or for receiving an audio signal from a cellular phone representing a caller's voice. Of course, other audio, video, or data signals can be transmitted between the audio device **510**C and such a cellular phone through such transceivers.

[0234] In other embodiments, drivers and other electronics for driving heads-up displays, such as liquid crystal displays or other miniature display technology can also be carried by the audio device **510**C. The power source **632** can be carried by the audio device **510**C. For example, without limitation, the power source **632** can advantageously be replaceable or rechargeable. Other electronics or mechanical components can additionally be carried by the audio device **510**C. In other embodiments, the audio device **510**C can also be utilized solely to support any of the foregoing or other electronics components or systems, without also supporting one or more lenses in the wearer's field of view. Thus, in any of the embodiments of the audio devices disclosed herein, the lenses and/or lens orbitals can be omitted as will be apparent to those of skill in the art in view of the disclosure herein.

[0235] With reference to FIGS. **51**, **53**A, and **53**B, in another embodiment, the transceiver **630** is adapted to employ a wide variety of technologies, including wireless communication such as RF, IR, ultrasonic, laser or optical, as well as wired and other communications technologies. In one embodiment, a body-LAN radio is employed. Other embodiments can employ a flexible-circuit design. Many commercially available devices can be used as transceiver **630**. For example, without limitation, Texas Instruments, National Semiconductor, Motorola manufacture and develop single RF transceiver chips, which can use, for example, 0.18 micron, 1.8 V power technologies and 2.4 GHz transmission capabilities. Of course, a variety of transceiver specifications are available and usable, depending on the particular embodiment envisioned. In another implementation, other commercially available products operating at 900 MHz to 1.9 GHz or more can be used. Data rates for information transfer to wearable or other type computing devices will vary with each possible design. In a preferred implementation, a data rate is sufficient for text display. RF products, and other products, ultimately will be capable of updating a full-color display and have additional capabilities as well. Thus, heads-up displays, such as liquid crystal displays or other miniature display technology described above can be employed.

[0236] An audio network **300** in accordance with another embodiment of the present inventions is illustrated in FIG. **54**. Audio network **700** includes a content source **702** coupled to an audio device **704** via communications link **706**. The content source **702** is any of a variety of information sources, including, but not limited to, radio stations and/or signals, a satellite radio source, a computer, a network, a storage device, such as a hard drive, a memory card, or a USB (Universal Serial Bus) drive, an audio component (e.g., a stereo receiver, a CD player, a tuner, an MP3 player, a digital audio player, etc.), a database, and/or a communications-enabled device, such as a telephone (including a BLUETOOTH enabled tele-

phone), a PDA, a BLACKBERRY, the Internet, or the like. The content provided by the content source **702** may be any of a variety of information, including but not limited to, audio files, entertainment, news, media, music, photos, videos, advertising, etc.

[0237] The audio device **704** may be any of the audio devices described above with respect to FIGS. 1-19 of U.S. Application Publication No. 2006/0132382, the entirety of which is incorporated herein by reference, or may include any of the audio devices described below. In one embodiment, audio device **704** is electronically enabled eyewear, as discussed herein. Audio device **704** is coupled to content source **702** via communications link **706**. Communications link **706** may be any of a variety of information conduits known to those of skill in the art, including: a cable, a wire, a conductor, a bus, an RF signal, a radio signal, a satellite signal, a BLUETOOTH signal, etc. In one embodiment, the communications link **706** includes a USB, mini-USB, USB-to-mini-USB, FIREWIRE, IEEE 1394, RS232, SCSI, or any other cable. In one embodiment, the communications link **706** is temporarily attached to the audio device **704** for the transfer of content from the content source **702** to the audio device **704**. In another embodiment, the communications link **706** is a retractable cable mounted at least partially inside of the audio device **704**.

[0238] In one embodiment, the audio network **700** is configured for the downloading of music from the content source **702** (e.g., a user's computer) to the audio device **704**. In another embodiment, the audio network **700** is configured for the uploading of content stored within the audio device **704** to the content source **702**.

[0239] One embodiment of the audio device **704** is illustrated in FIG. **54**. Audio device **704** generally includes a data port **708**, data interface **710**, processor **712**, digital-to-analog converter **714**, speaker drivers **716**, and speakers **718**. In addition, audio device **704** generally also includes a control interface **720**, user controls **722**, display/indicator drivers **724**, display/indicators **726**, power module **728**, and memory module **730**; however, any one or more of these components may be combined. For example, in one embodiment, data interface **710**, control interface **720**, display/indicator drivers **724**, digital-to-analog converter **714**, and speaker drivers **716** are combined with processor **712** into a single component.

[0240] The display/indicator drivers **724** are generally amplifiers or other drivers known to those of skill in the art, useful for driving or activating display/indicators **726**. In one embodiment, the display/indicator drivers **724** receive signals from the processor **712** and generate drive signals to turn on or off display elements of the display/indicators **726**. In one embodiment, the display/indicators **726** include an LED, LCD, light, tone, sound, beep, vibration, or other such display or indicator, or other indicators known to those of skill in the art. In one embodiment, the display/indicators **726** indicate a song selection, a power level, a volume, a remaining battery life, an artist, a song title, a time remaining during the playback of an audio file, a duration of an audio file's playback, or any other data related to an audio data file.

[0241] Although these inventions have been disclosed in the context of a certain preferred embodiments, it will be understood by those skilled in the art that the present inventions extend beyond the specifically disclosed embodiment to other alternative embodiments and/or uses of the inventions and obvious modifications and equivalents thereof. In particular, while the present support assembly, support, detachable module and methods have been described in the context of a particularly preferred embodiment, the skilled artisan will appreciate, in view of the present disclosure, that certain advantages, features and aspects of the support assembly, support, detachable module and method may be realized in a variety of other devices. Additionally, it is contemplated that various aspects and features of the inventions described can be practiced separately, combined together, or substituted for one another, and that a variety of combination and sub-combinations of the features and aspects can be made and still fall within the scope of the invention. Thus, it is intended that the scope of the present inventions herein disclosed should not be limited by the particular disclosed embodiment described above, but should be determined only by a fair reading of the claims that follow.

1. An eyewear system, comprising:
an eyeglass, having a right ear stem and a left earstem;
a first speaker supported by one of the right and left earstems;
a display device; and
an electronics module supported by the eyeglass and in electrical communication with the first speaker and the display device.

2. An eyewear system as in claim **1**, further comprising a second speaker supported by the left earstem.

3. An eyewear system as in claim **1**, wherein the electronics module includes an MP3 format memory.

4. An eyewear system as in claim **1**, wherein the electronics module includes a cellular telephone.

5. An eyewear system as in claim **1**, wherein the display device comprises a video display unit.

6. An eyewear system as in claim **1**, wherein the display device unit comprises a projector.

7. An eyewear system as in claim **1**, wherein the display device unit is spaced from a lens of the eyeglass.

8. An eyewear system as in claim **1**, wherein the display device unit is positioned along a lens of the eyeglass.

9. An eyewear system as in claim **1**, further comprising an articulating arm that couples the first speaker to the right earstem.

10. A media communication device for providing video and audio media to a wearer, the media communication device comprising a clip-on module that is removably attachable to a wearable support configured to be worn by the wearer, the media communication device comprising a speaker, a display device, and an electronics module, the electronics module being in electrical communication with the first speaker and the display device to provide video and audio media communication to the wearer.

11. A media communication device as in claim **10**, wherein the electronics module comprises a receiver.

12. A media communication device as in claim **10**, wherein the electronics module comprises a transmitter.

13. A media communication device as in claim **10**, wherein the display device comprises a retinal projector.

14. A media communication device as in claim **10**, wherein the display device comprises a LCD display.

15. A media communication device as in claim **10**, wherein the display device is adjustably mounted to the electronics module.

16. A media communication device as in claim **10**, wherein the display device comprises a viewing plane that is positionable at a location anterior to the wearable support.

17. A media communication device as in claim **10**, wherein the wearable support is an eyeglass and the media communication device is removably attachable to an earstem of the eyeglass.

18. A media communication device for use with a wearable support, the device comprising:

a first speaker assembly comprising a first speaker and a first coupling, the first coupling configured to removably attach to the wearable support;

a display device supported by the first speaker assembly, the display device being positionable in the field of view of the wearer;

source electronics supported by the first speaker assembly; and

a communications link in communication with the first speaker, the display device, and the source electronics.

19. A media communication device as in claim **18**, further comprising a second speaker assembly comprising a second speaker and a second coupling, the second coupling configured to removably attach to the wearable support.

20. A media communication device as in claim **18**, wherein the communications link is further in communication with the second speaker.

21. A media communication device as in claim **18**, wherein the display device comprises a retinal projector.

22. A media communication device as in claim **18**, wherein the display device comprises a LCD display.

23. A media communication device as in claim **18**, wherein the display device is adjustably supported by the first speaker assembly.

24. A media communication device as in claim **23**, wherein the display device comprises a viewing plane that is positionable at a location anterior to the wearable support.

25. A media communication device as in claim **18**, wherein the wearable support is an eyeglass and the first speaker assembly is removably attachable to an earstem of the eyeglass.

* * * * *