CORI C. STEINMANN (Bar No. 309861)
csteinmann@kslaw.com
KING & SPALDING LLP
633 West Fifth Street, Suite 1600
Los Angeles, CA 90071
Telephone: (213) 443-4355
Facsimile: (213) 443-4310

CHRISTOPHER C. CAMPBELL (*pro hac vice*)
ccampbell@kslaw.com
JEFFREY M. TELEP (*pro hac vice*)
jtelep@kslaw.com
KING & SPALDING LLP
1700 Pennsylvania Avenue, NW, Suite 200
Washington, DC 20006-4707
Telephone: (202) 626-5578

BRITTON F. DAVIS (*pro hac vice*)
bfdavis@kslaw.com
KING & SPALDING LLP
1401 Lawrence Street, Suite 1900
Denver, CO 80202
Telephone: (720) 535-2300
Attorneys for Plaintiffs
E-VISION OPTICS, LLC and E-VISION SMART OPTICS, INC.

UNITED STATES DISTRICT COURT
CENTRAL DISTRICT OF CALIFORNIA

E-VISION OPTICS, LLC AND E-VISION SMART OPTICS, INC., Plaintiffs, v. LUXOTTICA GROUP S.P.A. and LUXOTTICA OF AMERICA INC., Defendants.	Case No. 8:23-cv-02013-AB-(SHKx) **PLAINTIFFS' CLAIM CONSTRUCTION BRIEF**

Luxottica v. e-Vision
IPR2025-00216
Luxottica Ex. 1045

TABLE OF CONTENTS

I. INTRODUCTION 1

II. LEGAL STANDARD 1

III. ARGUMENT 2

A. Overview of the ’960 Patent 2

1. “application module” (’960 patent, claim 1) 4

2. “verbal query” (’960 patent, claim 1) 5

B. Overview of the ’483 Patent 8

1. “inductively rechargeable battery” (’483 patent, claims 17, 36) 8

C. Overview of the ’174 Patent 11

1. “electronics module” (’174 patent, claim 1; ’541 patent, claim 1) 13

2. “conductive path” (’174 patent, claim 1) 14

3. “couple the electronics module to the first temple to constrain the electronics module” (’174 patent, claim 1) 16

4. “coupling the capacitive touch switch to a partial enclosure to constrain the capacitive touch switch” (’174 patent, claim 15) 19

IV. CONCLUSION 21

TABLE OF AUTHORITIES

Page(s)

Cases

Arlington Indus., Inc. v. Bridgeport Fittings, Inc.,
632 F.3d 1246 (Fed. Cir. 2011) 7

Aventis Pharma S.A. v. Hospira, Inc.,
675 F.3d 1324 (Fed. Cir. 2012) 7

Bd. of Trustees of Leland Stanford Junior Univ. v. Roche Molecular Sys., Inc.,
528 F. Supp. 2d 967 (N.D. Cal. 2007) ..... *passim*

Cadence Pharms. Inc. v. Exela PharmSci Inc.,
780 F.3d 1364 (Fed. Cir. 2015) 14, 19, 21

Cont'l Circuits LLC v. Intel Corp.,
915 F.3d 788 (Fed. Cir. 2019) 2

Eon Corp. IP Holdings v. Silver Spring Networks,
815 F.3d 1314 (Fed. Cir. 2016) 22

Ethicon LLC v. Intuitive Surgical, Inc.,
847 F. App'x 901 (Fed. Cir. 2021) 11

Function Media, L.L.C. v. Google, Inc.,
708 F.3d 1310 (Fed. Cir. 2013) 22

K-fee Sys. GmbH v. Nespresso USA, Inc.,
89 F.4th 915 (Fed. Cir. 2023) 2

Linear Tech. Corp. v. Int'l Trade Comm'n,
566 F.3d 1049 (Fed. Cir. 2009) 11

In re Lockwood,
679 F. App'x 1021 (Fed. Cir. 2017) 14, 19, 21

Phillips v. AWH Corp.,
415 F.3d 1303 (Fed. Cir. 2005) 1, 2, 7

Prolitec, Inc. v. Scentair Techs., Inc.,
807 F.3d 1353 (Fed. Cir. 2015), *overruled on other grounds by Aqua Prod., Inc. v. Matal*, 872 F.3d 1290 (Fed. Cir. 2017).....15, 19, 22

Purdue Pharma L.P. v. Faulding Inc.,
230 F.3d 1320 (Fed. Cir. 2000) 7

Sequoia Tech., LLC v. Dell, Inc.,
66 F.4th 1317 (Fed. Cir. 2023) 6, 7, 15

Taction Tech., Inc. v. Apple Inc.,
686 F. Supp. 3d 995 (S.D. Cal. 2023) 18

Thorner v. Sony Computer Entm't Am. LLC,
669 F.3d 1362 (Fed. Cir. 2012) 2, 11

Vehicle IP, LLC v. AT&T Mobility, LLC,
594 F. App'x 636 (Fed. Cir. 2014) 11

Vitronics Corp. v. Conceptronic, Inc.,
90 F.3d 1576 (Fed. Cir. 1996) 15

Weber, Inc. v. Provisur Techs., Inc.,
92 F.4th 1059 (Fed. Cir. 2024), *cert. docketed*, No. 23-1349
(June 27, 2024) 2, 4

I. INTRODUCTION

Plaintiffs e-Vision Optics, LLC, and e-Vision Smart Optics, Inc. ("e-Vision" or "Plaintiffs") hereby respectfully submit their opening brief in support of construction of the disputed terms and limitations in U.S. Patent Nos. 8,708,483 (the "'483 patent"), Ex. 3, 8,801,174 (the "'174 patent") Ex. 5, 8,905,541 (the "'541 patent"), Ex. 6, 10,598,960 (the "'960 patent"), Ex. 1, and 10,613,355 (the "'355 patent"), Ex. 7 (collectively the "Asserted Patents").

E-Vision's proposed constructions should be adopted. They are supported by the intrinsic evidence, the extrinsic evidence, reflect the understanding of a person of ordinary skill in the art, and provide helpful clarification that will avoid potential jury confusion.

II. LEGAL STANDARD

"It is a bedrock principle of patent law that the claims of a patent define the invention to which the patentee is entitled the right to exclude." *Phillips v. AWH Corp.*, 415 F.3d 1303, 1312 (Fed. Cir. 2005)[1]. Consistent with this bedrock principle, it is "unjust to the public, as well as an evasion of the law, to construe it in a manner different from the plain import of its terms." *Id.*

During claim construction, the words of a claim are generally to be given their ordinary and customary meaning. *Id.* As such, the process of claim construction should begin with the claims themselves. *Id.* at 1312-13. Oftentimes, the meaning of a claim term may be readily apparent by the claim language alone. *Id.* at 1314. ("[T]he ordinary meaning of claim language as understood by a person of skill in the art may be readily apparent even to lay judges and claim construction in such cases involves little more than the application of the widely accepted meaning of commonly understood words.").

[1] Unless otherwise stated, citations and internal quotations marks are omitted, and emphasis is added.

Apart from the claims themselves, disputed claim terms should be considered in the context of the specification. *Id.* However, the Federal Circuit has consistently cautioned against reading limitations into the claims, such as by reading specific embodiments into the claims. *Weber, Inc. v. Provisur Techs., Inc.*, 92 F.4th 1059, 1070 (Fed. Cir. 2024) ("Although the specification often describes very specific embodiments of the invention, we have repeatedly warned against confining the claims to those embodiments."), *cert. docketed*, No. 23-1349 (June 27, 2024). It should also be noted that a construction that limits the scope of a claim term must meet an "exacting standard," and absent clear evidence of intent by the patentee to disclaim the plain and ordinary meaning of a claim term, or to provide the claim term with a special definition, the plain and ordinary meaning shall apply. *K-fee Sys. GmbH v. Nespresso USA, Inc.*, 89 F.4th 915, 919 (Fed. Cir. 2023) ("[T]he patentee can, by acting with sufficient clarity, disclaim such a plain meaning or prescribe a special definition."); *Cont'l Circuits LLC v. Intel Corp.*, 915 F.3d 788, 798 (Fed. Cir. 2019) (noting the "exacting standard" required to limit the scope of the claims, which requires "clear and unmistakable language"). This exacting standard also applies to the prosecution history of the patent at issue. *Thorner v. Sony Computer Entm't Am. LLC*, 669 F.3d 1362, 1365 (Fed. Cir. 2012) ("There are only two exceptions to [the] general rule [that claim terms are to be given their plain and ordinary meaning]: 1) when a patentee sets out a definition and acts as his own lexicographer, or 2) when the patentee disavows the full scope of a claim term either in the specification or during prosecution.").

The extrinsic evidence may also be considered, but only if contemplated by (and therefore consistent with) the intrinsic evidence. *Weber*, 92 F.4th at 1070.

III. <u>ARGUMENT</u>

A. Overview of the '960 Patent

At the time of the patented invention disclosed in the '960 patent, conventional electronic eyewear was limited to one application in addition to being used as

traditional eyewear. Ex. 1, 1:24-26. For example, there were commercially available electronic focusing eyeglasses, eyeglasses with a built in MP3 player, or occupation-specific eyeglasses with video. *Id.* at 1:26-32. But in relying on this method, the prior art electronic eyeglasses were limited to one application device at a time. *Id.* Accordingly, there was a need for improved, fashionable eyewear capable of utilizing one or more different applications while in use. *Id.* at 1:49-62.

The ’960 patent discloses an eyewear frame which incorporates a mechanically coupled application module. *Id.* at cls. 1, 11, 22. The application module may include one or more electronic devices that perform a variety of functions—for example, audio playback and recording, acoustic amplification and canceling, video playback and recording, geolocation, wireless communication, and more. *Id.* at 9:32-43. Each application module may include its own circuitry and logic sufficient to control its function and/or the function of a device included within the eyewear frame. *Id.* at 9:55-58.

The ’960 patent discloses an eyewear frame that incorporates this application module—either externally, internally within a recess, or via some kind of releasable fixing mechanism, e.g., pins, rails magnets, sockets, etc., as illustrated below. *Id.* at 9:63-67.

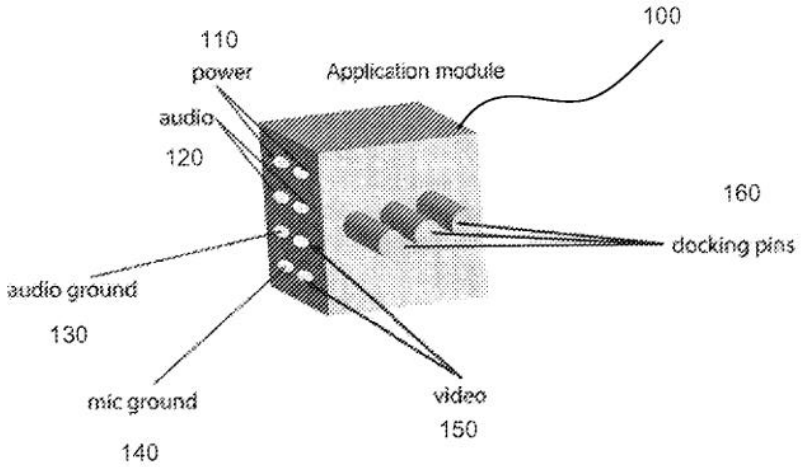

Id. at FIG. 1.

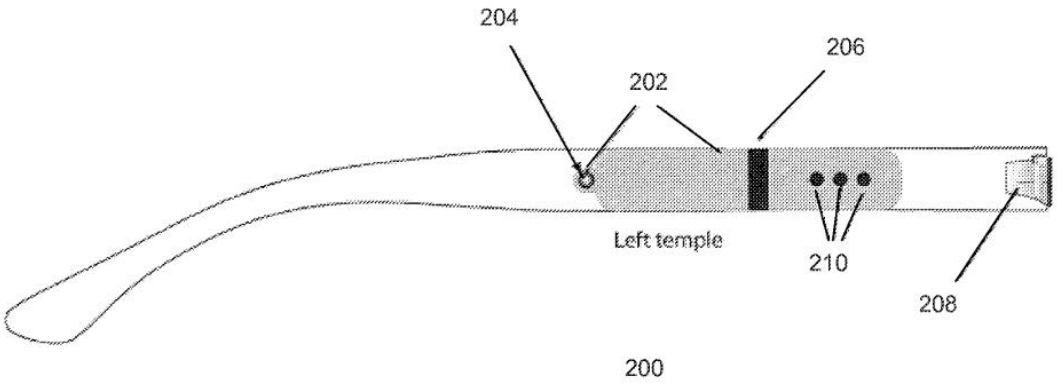

Id. at FIG. 4. Accordingly, the application module may be a separate device attached to the eyewear, or it may be an integral portion of the eyewear. *Id.* The '960 patented invention advantageously allows a variety of functional devices to be incorporated into the eyewear while maintaining the aesthetics.

1. "application module" ('960 patent, claim 1)

Disputed Claim Term	Luxottica's Proposed Construction	e-Vision's Proposed Construction
"application module"	a replaceable device that can be docked to the eyewear to support an application	No construction necessary; Plain and ordinary meaning

Luxottica's proposed construction is an attempt to read limitations into the claims, which is highly disfavored. *Weber, Inc.*, 92 F.4th at 1070 ("Although the specification often describes very specific embodiments of the invention, we have repeatedly warned against confining the claims to those embodiments."). Nothing in the claims indicates that the application module is replaceable. Indeed, the claims merely indicate that the claimed eyewear comprises "an application module mechanically coupled to the eyewear frame and operably coupled to the speaker." This language is easily understood by a lay jury and the claim language, as shown below, is used in its plain and ordinary fashion. As a result, no construction is warranted or required. *Bd. of Trustees of Leland Stanford Junior Univ. v. Roche*

Molecular Sys., Inc., 528 F. Supp. 2d 967, 976 (N.D. Cal. 2007) ("[Claim] terms do not need to be construed [if] they are neither unfamiliar to the jury, confusing to the jury, nor affected by the specification or prosecution history.") (citing *United States Surgical Corp. v. Ethicon, Inc.*, 103 F.3d 1554, 1568 (Fed. Cir. 1997) ("Claim construction is a matter of resolution of disputed meanings and technical scope, to clarify and when necessary to explain what the patentee covered by the claims, for use in the determination of infringement. It is not an obligatory exercise in redundancy.")).

Further, the claims say nothing about the application module being "docked" to the claimed eyewear to support an application. The specification also does not support Luxottica's construction that requires replaceability, docking, and support for an application. Instead, the specification provides that "[t]he term application module as used herein to be *any device when added to the inventive eyewear that provides one of an improvement, pleasure, or a benefit to or for a wearer of the eyewear*." Ex. 1, 21:59-62. The specification's discussion of "application module," is entirely consistent with the plain and ordinary meaning of the term—*any device* that provides an improvement or benefit. Nothing more is required.

The prosecution history also lacks any lexicography or disclaimer that would support Luxottica's improper importation of limitations into the claims. *See generally*, e.g., Ex. 2.

Accordingly, no construction is necessary for "application module," and it should be afforded its plain and ordinary meaning. However, to the extent the Court construes this term, such a construction should be expansive enough to cover the full scope of the disclosure in the intrinsic evidence, which includes any device configured to perform a function, or alternatively "any device when added to the inventive eyewear that provides one of an improvement, pleasure, or a benefit to or for a wearer of the eyewear." Ex. 1, 21:59-62.

2. "verbal query" ('960 patent, claim 1)

Disputed Claim Term	Luxottica's Proposed Construction	e-Vision's Proposed Construction
"verbal query"	No construction necessary	Verbal question raised orally by a wearer of the eyewear

The term "verbal query" is a commonly understood term – it is a "query" (question) that is "verbal" (composed of words spoken orally). The claims make clear that a "verbal query" is a "verbal question." Claim 1 of the '960 patent, for example, recites that an application module comprises "a microphone and a wireless chip to receive a verbal query from a wearer of the eyewear." Ex. 1, cl. 1. Claim 4 further provides that "the verbal query includes a query about the weather." Thus, as the claims indicate, a "verbal query" must be 1) verbal, 2) a question, and importantly, 3) raised orally by the wearer of the eyewear so that it can be received by the microphone. The addition of "raised orally by the wearer" is consistent with the plain and ordinary meaning of the term and necessitated by the context of the claim language—because the verbal query is received from the wearer by the microphone. *Sequoia Tech., LLC v. Dell, Inc.*, 66 F.4th 1317, 1324 (Fed. Cir. 2023) ("Claims . . . do not have meaning removed from the context from which they arose.").

The specification further supports this construction. While the term "query" is not used in the specification, claims need not copy the disclosure in the specification *in haec verba*. *Purdue Pharma L.P. v. Faulding Inc.*, 230 F.3d 1320, 1323 (Fed. Cir. 2000) ("[T]he disclosure as originally filed does not have to provide *in haec verba* support for the claimed subject matter at issue.").

While it is true that courts should be very careful not to read specific embodiments into the claims, courts should also be careful to define claim terms consistent with the specification, particularly where claimed functionality is described in a manner consistent with a particular definition. *Arlington Indus., Inc. v. Bridgeport Fittings, Inc.*, 632 F.3d 1246, 1254 (Fed. Cir. 2011) ("This court has, on occasion, supplied a definition by implication, if the specification manifests a clear intent to

limit the term by using it in a manner consistent with only a single meaning."). The specification explains what a verbal query is – it is a verbal question raised orally by a wearer of the inventive eyewear. Ex. 1, 20:5-6, cls. 1, 4. Moreover, this verbal query is made in the context of a conversational communication between the wearer of the eyewear and a virtual personal assistant. *Id. at* 19:64-20:21; *Sequoia Tech.*, 66 F.4th at 1324; *Aventis Pharma S.A. v. Hospira, Inc.*, 675 F.3d at 1330 (A "clear expression [of lexicography] need not be *in haec verba* but may be inferred from clear limiting descriptions of the invention in the specification or prosecution history."). This is the only meaning consistent with the specification and should be construed as such.

Indeed, the specification differentiates between, for example, questions and commands – two widely known terms to POSITAs and laypersons alike – and makes clear they are oral. Ex. 1, 20:27-34 ("[T]he wireless enabled personal assistant device module . . . can be used to provide direction by the wearer of the eyeglasses such that the wearer provides an *oral command*. . . such as . . . change a TV station."). Based on this implication, the '960 patent shows that the patentee intended to read the commonly understood word "query" in the manner in which it is widely accepted in the art and apparent to laypersons. *Phillips*, 415 F.3d at 1314 ("[T]he ordinary meaning of claim language as understood by a person of skill in the art may be readily apparent even to lay judges and claim construction in such cases involves little more than the application of the widely accepted meaning of commonly understood words.").

The extrinsic evidence further supports this construction. The plain and ordinary meaning of the term "query" is "a question" or "an inquiry." Ex. 8; Ex. 9. Thus, it is a synonym for the term "query" as used in the claims. Consistent with the extrinsic evidence, the claims and specification provide that the claimed eyewear receives "a verbal query from a wearer of the eyewear." Ex. 1, cl. 1.

Accordingly, the proper construction for "verbal query" is "a verbal question raised orally by a wearer of the eyewear."

B. Overview of the ’483 Patent

The ’483 patent discloses improved electro-active eyewear. Like the ’541 and ’174 patents to which the ’483 patent is related, the ’483 patent seeks to incorporate electronics into eyewear without limiting the fashion of the eyeglass frame or the materials with which it is made, minimize the number of components, and allow robust placement of electronics in a way that maintains affordable manufacturing costs and aesthetics. Ex. 3, 1:51-2:17.

The ’483 patent also discloses an electro-active frame containing two temples, lenses, and an electronics module. *Id. at* FIGs. 9A-C. The exemplary incorporation of an electronics module (401) within a frame hinge’s receptable (404) is illustrated below:

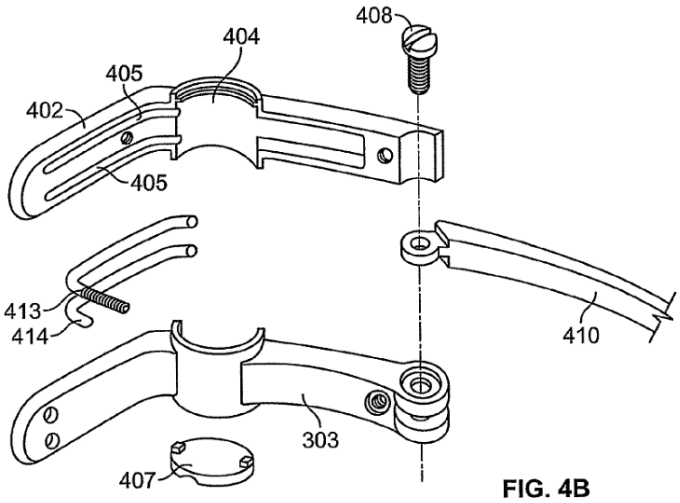

FIG. 4B

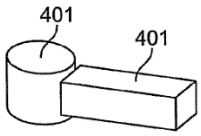

FIG. 4C

Id. at FIGs. 4B, 4C. To improve the functionality of the electro-active frames, the ’483 patent discloses an electronics module formed of one or more electrical components in a substantially waterproof and wear resistant/moisture resistant environment—for example, one that is hermetically sealed. *Id. at* 10:40-50, cls. 1, 19. The ’483 patent may power the electronic components using a battery. The battery may be inductively rechargeable using, for example, a charging coil, which can allow the battery to be charged while the environment remains hermetically sealed. *Id. at* 9:13-17.

1. “inductively rechargeable battery” (’483 patent, claims 17, 36)

Disputed Claim Term	Luxottica’s Proposed	e-Vision’s Proposed

	Construction	Construction
"inductively rechargeable battery"	battery that is recharged through wireless power transfer rather than direct electrical contact	No construction necessary; Plain and ordinary meaning

This term requires no construction because there is no intent by the patentee to act as its own lexicographer, nor is there any specification disclaimer. The claims are plain and consistent with their ordinary meaning—a rechargeable battery that can be recharged using induction. *See Stanford Junior Univ.*, 528 F. Supp. 2d at 976 ("[Claim] terms do not need to be construed [if] they are neither unfamiliar to the jury, confusing to the jury, nor affected by the specification or prosecution history.") (citing *United States Surgical*, 103 F.3d at 1568). Luxottica, however, seeks to import the limitation "wireless power" and the negative limitation "rather than direct electrical contact" into the claims, which is highly disfavored. Nothing in the intrinsic or extrinsic record indicates that "inductively rechargeable battery" requires "wireless" charging or prohibits "direct electrical contact."

The claims merely require an "inductively rechargeable battery." *Id.* at cls. 17, 36. Nowhere do the claims preclude direct electrical contact, and nowhere do the claims state "wireless power." *See id.* Accordingly, Luxottica has no support in the claims that the "inductively rechargeable battery" implicates "wireless power" or the negative limitation "rather than direct electrical contact." Luxottica's proposed negative limitation precludes, for example, a rechargeable battery that can be recharged by both wireless power and direct electrical contact. Nothing in the intrinsic evidence supports such a construction.

The specification is similarly lacking in any support for the limitations imported by Luxottica's proposed construction. For instance, Luxottica cannot point to anywhere in the specification any special definition, nor can Luxottica point to any express (or even implied) disclaimer. The specification provides the following nonlimiting embodiment with regard to an inductively rechargeable battery:

> FIG. 10 illustrates an electronic module 1000 of another embodiment of the present invention. The module includes a flex circuit 1010 with two conductive buses 1020 and 1030 for making electrical contact to the front surface of an electro-active lens. The module includes a drive circuit 1040 placed above a rechargeable battery 1050. Below the battery is a recharging coil 1060. The charging coil is used to inductively recharge the battery without direct contact. In this way, the module may be hermetically sealed while still allowing the battery to be recharged without breaking a moisture resistant seal.

Id. at 9:8-17. As noted in the passage above, the '483 patent describes "another embodiment of the present invention." *Id.* This nonlimiting embodiment of an electronic module may include a power source. The power source may be a battery that is recharged using a charging coil. The charging coil may allow the battery to be inductively charged. In this nonlimiting embodiment, the charging coil can do so without direct contact. Nothing in the passage above meets the exacting standard required to find that the patentee intended to redefine the scope of "inductively rechargeable battery," or to limit the scope of this term to this nonlimiting embodiment. *Thorner*, 669 F.3d at 1365 ("It is not enough for a patentee to simply disclose a single embodiment or use a word in the same manner in all embodiments, the patentee must 'clearly express an intent' to redefine the term."). Absent clear evidence to the contrary, Luxottica's proposed construction aims to improperly limit the scope of "inductively rechargeable battery" and should therefore be rejected.

Perhaps even more problematic is that Luxottica seeks to import a negative limitation – "rather than direct contact" – into the claims. The Federal Circuit has stated time and time again that a construction that would import a negative limitation is highly disfavored. *Ethicon LLC v. Intuitive Surgical, Inc.*, 847 F. App'x 901, 907-

08 (Fed. Cir. 2021) ("We have identified claim constructions that exclude a particular element as including a 'negative limitation' and held that such exclusions must find support either in 'the words of the claim' or through an "express disclaimer or independent lexicography in the written description that would justify adding that negative limitation.'") (quoting *Omega Eng'g, Inc. v. Raytek Corp.*, 334 F.3d 1314, 1323 (Fed. Cir. 2003)); *Vehicle IP, LLC v. AT&T Mobility, LLC*, 594 F. App'x 636, 642 (Fed. Cir. 2014) (same); *Linear Tech. Corp. v. Int'l Trade Comm'n*, 566 F.3d 1049, 1060 (Fed. Cir. 2009) (same). Here, there is no evidence that the words of the claim include the negative limitation "rather than direct contact." There is also no evidence in the specification or prosecution history that "inductively rechargeable battery" was intended to include the negative limitation "rather than direct contact." Absent this evidence, Luxottica's proposed construction is highly improper and must be rejected.

The prosecution history of the '483 patent also lacks any express disclaimer or independent lexicography. The application that issued as the '483 patent originally included claims 32 and 53 (claims 17 and 36 of the '483 patent), which recites "wherein the power source comprises an inductively rechargeable battery." There was no argument or statement by the patentee evincing an express intent to limit this term, and these claims were allowed. Ex. 4, pg. *202 of Exhibit (Dec. 24, 2012, Preliminary Amendment, cl. 32), pgs. *112, *114 (Sept. 5, 2013, Response to Office Action, cls. 32, 53), pg. *69 (Sept. 16, 2013, Notice of Allowance). There were no statements by the Examiner that could possibly have been ratified by the patentee to limit the scope of this term. Therefore, the patentee did not disclaim any subject matter in order for this claim to be allowed. Absent evidence to the contrary, Luxottica again has no support for its importation of limitations, including negative limitations, into the claim language.

C. Overview of the '174 Patent

The '174 patent is related to the 483 patent and similarly discloses improved

electro-active eyewear. The ’174 patent describes a device containing a “lens housing” (103)—e.g., part of the eyeglass frame that is configured to hold two lenses in place—and two temples (e.g., 102) coupled to the lens housing, as illustrated below:

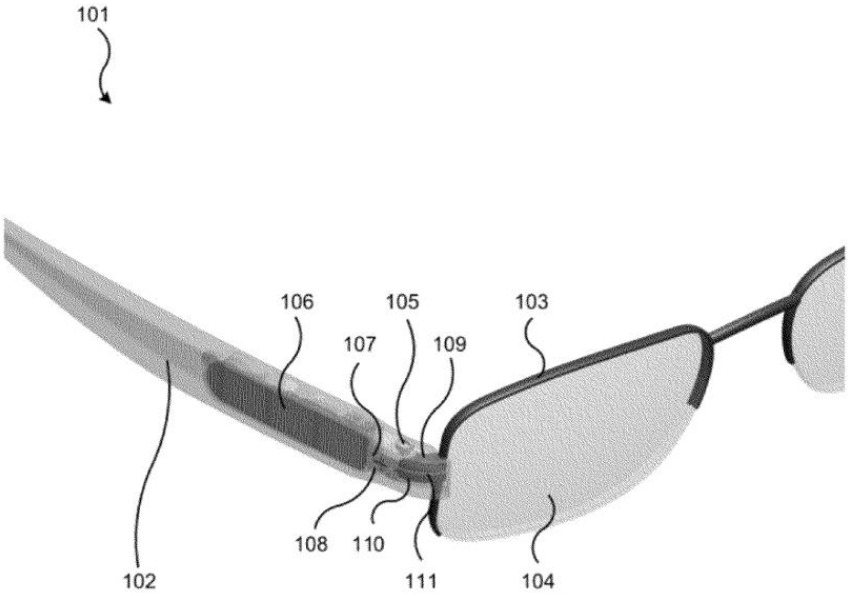

Ex. 5, FIG. 2, cl. 1. Like the ’483 patent, an electronics module (106) may be incorporated at least partially within a temple. *Id.* at, 15:41-45, cl. 1. One example of an electronics module is a capacitive switch, a portion of which is exposed through the temple so that the user may interact with the switch using his finger. *Id.* at, 11:26-36, cl. 15, FIGs. 25-26.

The ’174 patent claims the inclusion of two electrical conductors (107, 108), which can be coupled to a temple, and which may provide a conductive path from the temple to the lens housing. *’Id.* at 15:45-16:6, cl. 1. A close-up of exemplary conductors is shown below:

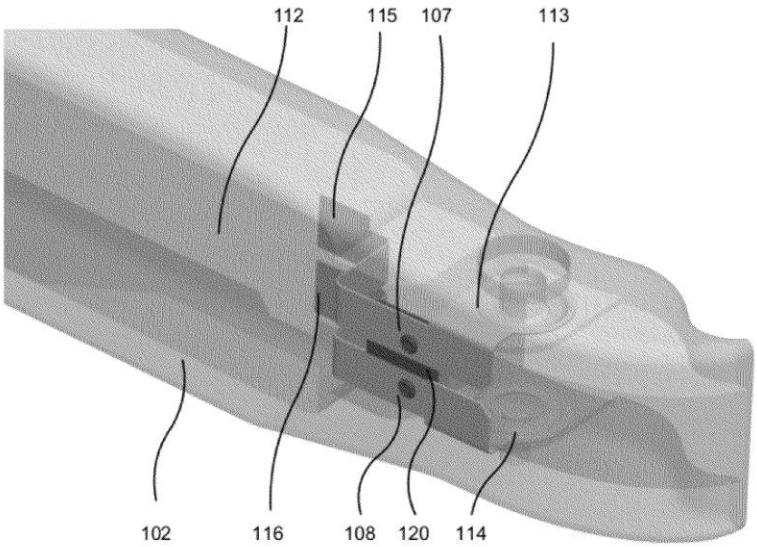

Id. at FIG. 5. These electrical conductors may serve to constrain the electronics module—for example, by providing a restraining force to hold the electronics module in a fixed position within the temple. *Id.* at 11:50-65, cl. 1.

1. "electronics module" ('174 patent, claim 1; '541 patent, claim 1)

Disputed Claim Term	Luxottica's Proposed Construction	e-Vision's Proposed Construction
"electronics module"	a housing or container with one or more electronic components disposed therein	No construction necessary; Plain and ordinary meaning

This term needs no construction because the plain language of the claims speak for themselves. The terms are easily accessible to a lay juror and there is no risk of confusion. *See Stanford Junior Univ.*, 528 F. Supp. 2d at 976 ("[Claim] terms do not need to be construed [if] they are neither unfamiliar to the jury, confusing to the jury, nor affected by the specification or prosecution history.") (citing *United States Surgical*, 103 F.3d at 1568).

The specification provides multiple examples that an electronics module *may* be. For example, it "*may* refer to a housing or container that comprises a plurality of

electrical components disposed therein," but it also "*may* comprise a power source …, a sensing mechanism …, and/or a controller," and it also "*may* comprise an outer casing." *E.g.*, '174 patent, 8:8-27. The repeated use of "may" clearly indicates these are permissive examples what an electronics module *may* be, and it is clear that the "housing or container" and "disposed therein" are nonlimiting embodiments. *See In re Lockwood*, 679 F. App'x 1021, 1027 (Fed. Cir. 2017) (finding that the words "may" and "for example" "are not the "clear and unmistakable" statements necessary for disclaimer."); *Cadence Pharms. Inc. v. Exela PharmSci Inc.*, 780 F.3d 1364, 1369 (Fed. Cir. 2015) ("The statement in the specification that the concentration of the buffer 'may be' between 0.1 and 10 mg/ml is not limiting, because even if all of the embodiments discussed in the patent" included a specific limitation, it would not be proper to import from the patent's written description limitations that are not found in the claims themselves."); *Prolitec, Inc. v. Scentair Techs., Inc.*, 807 F.3d 1353, 1358 (Fed. Cir. 2015), *overruled on other grounds by Aqua Prod., Inc. v. Matal*, 872 F.3d 1290 (Fed. Cir. 2017) ("the use of 'may' signifies that the inventors did not intend to lim it, [sic] the patent."). Yet, Luxottica wants to limit the construction to only some of these disclosed embodiments. That is improper. *Sequoia Tech.*, 66 F.4th at 1327; *Vitronics Corp. v. Conceptronic, Inc.*, 90 F.3d 1576, 1583 (Fed. Cir. 1996).

The specification further describes several embodiments consistent with the plain language of the claims. *See, e.g.*, Ex. 3 at 19:52-57 ("an electronics module 106 (which may comprise a plurality of electronic components such as a power source—e.g. a battery-, a controller, and/or a sensor) may be coupled to the temple 102 (not shown) in part by the first electrical conductor 107 and the second electrical conductor 108."). Again, these all use non-limiting, exemplary language that does not warrant or require a construction.

Accordingly, this term needs no construction.

2. "conductive path" ('174 patent, claim 1)

Disputed Claim Term	Luxottica's Proposed Construction	e-Vision's Proposed Construction
"conductive path"	a continuous path for which electrons (i.e. current) may flow from one point to another.	No construction necessary; Plain and ordinary meaning

This term needs no construction because the plain language of the claims speaks for itself—it is easily understood by lay jurors, used in its ordinary sense (a path that allows conduction of electricity), and requires no construction, especially one like Luxottica's that introduces overly technical language that could serve to confuse and obfuscate, rather than clarify. Indeed, Luxottica's construction does nothing more than articulate the plain meaning of the term, as used in the claims and the specification, but in a more complex and less clear manner. *Compare* Ex. 5, cl. 1, *with* 6:45-51. As a result, Luxottica's construction should be rejected. *See Stanford Junior Univ.*, 528 F. Supp. 2d at 976 ("[Claim] terms do not need to be construed [if] they are neither unfamiliar to the jury, confusing to the jury, nor affected by the specification or prosecution history.") (citing *United States Surgical*, 103 F.3d at 1568).

Luxottica's, a "conductive path" as used in the claims involves a path "provided from the first temple to the lens housing at least in part by the first electrical conductor." Ex. 5, cl. 1. Claim 14 of the '174 patent further describes the conductive path: "the first conductive path is electrically coupled to the first electrical contact." *Id. at* cl. 14. Further, there may be multiple conductive paths from a temple to a lens housing of the inventive eyewear. *Id. at* cl. 1. The specification describes the conductive path in a manner consistent with the language used in the claims. For instance, a "conductive path may be electrically coupled to an electro-active lens." *Id at* 3:32-33; *see also* '174 patent, 6:45-51 ("The conductive path may comprise one component, or more than one component. For instance, a conductive path may comprise portions of a lens housing, a temple, a hinge, a lens, and/or conductive

material disposed between (or within) some or all of the components."). These are all consistent with the plain and ordinary meaning of the term and adding Luxottica's construction does not clarify the term or help a jury.

Further, Luxottica's proposed construction unnecessarily imports technical terms and jargon (like the flow of electrons) into an otherwise easily understood term which does not help clarify or explain things to a jury, and may well do the opposite. As a result, it should be rejected. *Bd. of Trustees of Leland Stanford Junior Univ. v. Roche Molecular Sys., Inc.*, 528 F. Supp. 2d 967, 976 (N.D. Cal. 2007) ("[Claim] terms do not need to be construed [if] they are neither unfamiliar to the jury, confusing to the jury, nor affected by the specification or prosecution history.") (citing *United States Surgical Corp. v. Ethicon, Inc.*, 103 F.3d 1554, 1568 (Fed. Cir. 1997)).

As such, the meaning of conductive path is clear from the language of the claims, and no construction is necessary.

3. "couple the electronics module to the first temple to constrain the electronics module" ('174 patent, claim 1)

Disputed Claim Term	Luxottica's Proposed Construction	e-Vision's Proposed Construction
"couple the electronics module to the first temple to constrain the electronics module"	physically secure or provide a restraining force to the electronics module to retain the module in a fixed position within the temple	No construction necessary; Plain and ordinary meaning

This term does not need any construction. This term is easily understood when read in the context of the entire limitation (which Luxottica excludes) and its usage is consistent with the words' plain and ordinary meaning. These terms are not confusing or technical, and they are well within the capability of a lay juror to understand. As a result, no construction is necessary or warranted and certainly not the construction that Luxottica proposes which adds limitations and unnecessary technical jargon. *See Stanford Junior Univ.*, 528 F. Supp. 2d at 976 ("[Claim] terms do not need to be

construed [if] they are neither unfamiliar to the jury, confusing to the jury, nor affected by the specification or prosecution history.") (citing *United States Surgical*, 103 F.3d at 1568).

Moreover, Luxottica leaves out critical context—the interplay with the "electrical conductors" (see Ex. 5, cl. 1)—in its proposed construction and reads the claim term out of that context to provide overly narrow constructions of "constrain" and "couple," all while seeking to import limitations from the specification. *Taction Tech., Inc. v. Apple Inc.*, 686 F. Supp. 3d 995, 1017 (S.D. Cal. 2023) ("The context in which a disputed term is used in the asserted claims may provide substantial guidance as to the meaning of the term.").

Luxottica's construction also disregards multiple and varied specification disclosures discussing "couple," "constrain," and even "restraining force" as it can be used in the claims. For example, Luxottica seeks to narrowly construe "couple" to import the limitation "physically secure" into the claims. However, "couple" as used in the '174 patent is broader than just "physically secur[ing]" something. Instead, it is defined expansively (Ex. 5, 6:52-72) and can be as simple as components being "in physical contact" and also includes things like electrical connections. *Id., also id*. at 29:27-33 ("electrical traces 212 may be *electrically coupled* to one or electronic components (not shown) and may *thereby send signals* from the capacitive touch Switch 201 …"), at 30:6-7 ("structure that may be utilized to *both electrically and physically couple*"). The specification also discusses "moveably coupled" and "removably coupled." *Id. at* 1:56-61, 2:34-38. Further, the '174 patent suggests that components can be coupled even if they are "not in direct contact." *Id. at* 6:62-7:2. Nothing suggests or requires limiting the type of coupling in the claim to just "physically securing" something, let alone in a fixed position. Indeed, the context of the claim language—indicating the coupling to the electronics module is accomplished by the "electrical conductors" strongly suggests, if not outright requires, that coupling at least includes "electrical coupling" as opposed to "physically

securing." *Id. at* cl. 1; *Taction Tech., Inc. v. Apple Inc.*, 686 F. Supp. 3d 995, 1017 (S.D. Cal. 2023) ("The context in which a disputed term is used in the asserted claims may provide substantial guidance as to the meaning of the term.").

The specification of the '174 patent also discusses what is meant by "constrain" in several places. For example, the specification provides that "constrain", "*may* refer to when the first electrical conductor is configured to provide support (i.e., a restraining force) for the electronics module to retain the module in a fixed position within the temple." Ex. 5, 11:50-57. This is clearly permissive language, not limiting language, as denoted by the use of "may." *See In re Lockwood*, 679 F. App'x at 1027; *Cadence Pharms.*, 780 F.3d at 1369; *Prolitec*, 807 F.3d at 1358 ("the use of 'may' signifies that the inventors did not intend to lim it, [sic] the patent."), *overruled on other grounds by Aqua Prod.*, 872 F.3d 1290 (Fed. Cir. 2017). Despite this, Luxottica attempts to use this permissive disclosure to require the module be retained in a "fixed position," by a "restraining force." But this is not required by "constrain," as the specification goes on to state that:

> the first electrical conductor *may constrain* the electronics module when it is disposed within the temple *such that, during normal use, the electrics module remains in place*. However, the electronics module and/or the electrical conductor may be configured such that the module may also be removed from the temple without damaging the temple.

Ex. 5, 13:44-48, *see also id*. at 2:13-14 ("couple (e.g., constrain")), 1:42-47 (coupled such that a module is held in place, such as within a temple). As a result, it is clear that constrain within the '174 patent does not require a fixed position. This becomes even more apparent when claim language is read in context with the word "couple" discussed above, which allows for various types of coupling, including moveable and removeable coupling, indirect coupling, and electrical coupling.

Further, Luxottica seeks to add technical terms from the specification in place

of everyday language by proposing "providing a restraining force" in place of "constrain" or the specification's plain language alternative of "providing support." This overly technical language does not help explain or clarify the term and will only serve to confuse the jury with extra technical jargon. *Id. at* 11:50-57. Luxottica compounds its error by trying to construe the term to require this "restraining force" hold the module in a "fixed position." But this is again undermined by the specification. Instead, the specification goes into great detail about different types of forces and how they may apply when conductors are coupled, and how electronic modules may be coupled to the temples. *Id.* at 10:40-11:08. For example, the specification states that the first electrical connector "need not continually apply a force," "but could apply a force when the module begins to move in a particular direction—e.g. *a restraining force*—and thereby restrict the movement of the module and thus couple the module to the temple." *Id.* at 10:61-67. In other words, nothing requires a "restraining force," as used in the '174 patent, hold a module in a "fixed position." Instead, it may only act in limited circumstances for certain types of movement. And, again, as discussed above, "couple" is used extremely broadly in the '174 patent, and includes any kind of physical contact, indirect connections, electrical connections, removeable connections, and moveable connections. *E.g.*, *id*. at 6:52-72.

Given the permissive examples and broad definitions in the specification of the words couple, constrain, and restraining force, Luxottica's attempt to narrowly define this claim term to certain specification embodiments, while reading out others should be rejected.

Accordingly, this term needs no construction.

4. "coupling the capacitive touch switch to a partial enclosure to constrain the capacitive touch switch" ('174 patent, claim 15)

Disputed Claim Term	Luxottica's Proposed Construction	e-Vision's Proposed Construction
"coupling the capacitive touch switch to a partial	physically securing or providing a restraining	No construction necessary; Plain and

enclosure to constrain the capacitive touch switch"	force to the capacitive touch switch to retain the capacitive touch switch in a fixed position relative to an enclosure that substantially surrounds the electronic components that are disposed on a surface of the capacitive touch switch	ordinary meaning

This claim term is similar to the above disputed claim term "couple the electronics module to the first temple to constrain the electronics module." For the same reasons set forth above, the Court should decline to construe this term. *See* Section IV.C.3, *supra*.

Indeed, Luxottica's proposed construction here seeks to improperly limit this term *even further*. The specification of the '174 patent permissively recites that "a "partial enclosure" *may* refer to a component or components that *may* substantially surround the electronic components that are disposed on a surface of the capacitive touch switch. Ex. 5, 23:43-46. These are expressly not limiting requirements as indicated by the repeated use of "may." *See In re Lockwood*, 679 F. App'x at 1027; *Prolitec*, 807 F.3d at 1358 ("the use of 'may' signifies that the inventors did not intend to lim it, [sic] the patent."), *overruled on other grounds by*, *Aqua Prod.*, 872 F.3d 1290. The '174 patent goes further and discusses "partial enclosure" as follows:

> That is, for instance, the enclosure *may* surround the portions of the electronic components that are not covered by the capacitive touch switch. However, the enclosure *need not completely enclose or encircle the electronic components*. For example, the enclosure may have one or more openings that allow external components to interact with the components disposed within the enclosure. This

> may enable electrical connections to be made to the components therein.

Ex. 5, 23:46-54. From this additional discussion, it is clear that a "partial enclosure" need only "surround [] portions of the electronic components," and expressly allows openings to interact with components. *Id*. There is no requirement that the enclosure "substantially surrounds" the electronic components in every instance as Postscript's construction would require.

The plain and ordinary meaning of the words, when read in combination with the specification, makes it clear that this disputed claim term means what the words say it means – there is no need to further construe this term *ad infinitum*. *Eon Corp. IP Holdings v. Silver Spring Networks*, 815 F.3d 1314, 1318 (Fed. Cir. 2016) ("[A] court need not attempt the impossible task of resolving all questions of meaning with absolute, univocal finality. Such an endeavor could proceed ad infinitum, as every word—whether a claim term itself, or the words a court uses to construe a claim term—is susceptible to further definition, elucidation, and explanation."); *Function Media, L.L.C. v. Google, Inc.*, 708 F.3d 1310, 1326 (Fed. Cir. 2013) ("Nearly every patent case will involve some amount of 'word games,' because claims and claim constructions are, after all, just words."). However, Luxottica picks and chooses which portions of the definition to include, and which to omit, without any clear basis or reasoning. This approach to claim construction should be rejected, and this claim term should not be construed. However, to the extent the Court finds that this term should be construed, such a construction should be consistent with the intrinsic evidence, which is "provide support for the electronics module such that it remains in an operative position withing the first temple."

IV. <u>CONCLUSION</u>

In view of the foregoing, e-Vision respectfully requests that the Court reject Luxottica's improper proposed constructions and adopt e-Vision's proposed

constructions.

Dated: August 30, 2024

KING & SPALDING LLP

By: /s/ Christopher C. Campbell

CHRISTOPHER C. CAMPBELL (*pro hac vice*)
ccampbell@kslaw.com
JEFFREY M. TELEP (pro hac vice)
jtelep@kslaw.com
KING & SPALDING LLP
1700 Pennsylvania Avenue, NW, Suite 200
Washington, DC 20006-4707
Telephone: (202) 626-5578

CORI C. STEINMANN (Bar No. 309861)
csteinmann@kslaw.com
KING & SPALDING LLP
633 West Fifth Street, Suite 1600
Los Angeles, CA 90071
Telephone: (213) 443-4355
Facsimile: (213) 443-4310

BRITTON F. DAVIS (pro hac vice)
bfdavis@kslaw.com
KING & SPALDING LLP
1401 Lawrence Street, Suite 1900
Denver, CO 80202
Telephone: (720) 535-2300

Attorneys for E-VISION OPTICS, LLC and E-VISION SMART OPTICS, INC.