Wideband TDD

WCDMA for the Unpaired Spectrum

DR. PRABHAKAR CHITRAPU
DR. ALAIN BRIANCON

WILEY

Wideband TDD

WCDMA for the Unpaired Spectrum

Prabhakar Chitrapu

InterDigital Communications Corporation, USA

With a Foreword by Alain Briancon

John Wiley & Sons, Ltd

Wideband TDD

Wideband TDD

WCDMA for the Unpaired Spectrum

Prabhakar Chitrapu

InterDigital Communications Corporation, USA

With a Foreword by Alain Briancon

John Wiley & Sons, Ltd

Copyright © 2004
John Wiley & Sons Ltd, The Atrium, Southern Gate, Chichester,
West Sussex PO19 8SQ, England

Telephone (+44) 1243 779777

Email (for orders and customer service enquiries): cs-books@wiley.co.uk
Visit our Home Page on www.wileyeurope.com or www.wiley.com

All Rights Reserved. No part of this publication may be reproduced, stored in a retrieval system or transmitted in any form or by any means, electronic, mechanical, photocopying, recording, scanning or otherwise, except under the terms of the Copyright, Designs and Patents Act 1988 or under the terms of a licence issued by the Copyright Licensing Agency Ltd, 90 Tottenham Court Road, London W1T 4LP, UK, without the permission in writing of the Publisher. Requests to the Publisher should be addressed to the Permissions Department, John Wiley & Sons Ltd, The Atrium, Southern Gate, Chichester, West Sussex PO19 8SQ, England, or emailed to permreq@wiley.co.uk, or faxed to (+44) 1243 770620.

This publication is designed to provide accurate and authoritative information in regard to the subject matter covered. It is sold on the understanding that the Publisher is not engaged in rendering professional services. If professional advice or other expert assistance is required, the services of a competent professional should be sought.

Other Wiley Editorial Offices

John Wiley & Sons Inc., 111 River Street, Hoboken, NJ 07030, USA

Jossey-Bass, 989 Market Street, San Francisco, CA 94103-1741, USA

Wiley-VCH Verlag GmbH, Boschstr. 12, D-69469 Weinheim, Germany

John Wiley & Sons Australia Ltd, 33 Park Road, Milton, Queensland 4064, Australia

John Wiley & Sons (Asia) Pte Ltd, 2 Clementi Loop #02-01, Jin Xing Distripark, Singapore 129809

John Wiley & Sons Canada Ltd, 22 Worcester Road, Etobicoke, Ontario, Canada M9W 1L1

Wiley also publishes its books in a variety of electronic formats. Some content that appears in print may not be available in electronic books.

"3GPP TSs and TRs are the property of ARIB, CWTS, ETSI, T1, TTA and TTC who jointly own the copyright in them. They are subject to further modifications and are therefore provided to you "as is" for information purposes only. Further use is strictly prohibited".

British Library Cataloguing in Publication Data

A catalogue record for this book is available from the British Library

ISBN 0-470-86104-5

Typeset in 10/12pt Times by Laserwords Private Limited, Chennai, India
Printed and bound in Great Britain by Antony Rowe Ltd, Chippenham, Wiltshire
This book is printed on acid-free paper responsibly manufactured from sustainable forestry in which at least two trees are planted for each one used for paper production.

To
The InterDigital Engineers, who developed the TDD WCDMA Technology;
my parents, Ramanamma & Vencatachelam, because of whom, I am;
my family, Uma, Anjani & Anil, for their Love & Being;
my teachers, for their Insights & Values.

Contents

List of Figures **xiii**
List of Tables **xix**
Preface **xxi**
Acknowledgements **xxiii**
Foreword **xxv**
Acronyms **xxix**

1 Introduction **1**
1.1 WTDD Technology 2
1.2 Other Advanced Radio Interface Technologies 2
1.3 3GPP Standards for Wideband TDD (WTDD) 3
1.4 Overview of the Book 4

2 System Architecture and Services **5**
2.1 UMTS System Architecture 5
2.1.1 CN Architecture 5
2.1.2 UTRAN Architecture 7
2.1.3 Radio Interface 10
2.2 Protocol Architecture 10
2.2.1 UMTS Protocol Layers 11
2.2.2 Protocol Models for UTRAN Interfaces 12
2.3 UMTS Services 15
2.3.1 Traffic Classes and Quality of Service 16
2.3.2 UMTS QoS Attributes 18
References 19

3 Fundamentals of TDD-WCDMA **21**
3.1 TDD Aspects 21

3.2 TDMA Aspects 22
3.2.1 Data Burst Structure 22
3.2.2 Midamble Generation 23
3.2.3 Synchronization Bursts 25
3.3 WCDMA Aspects 26
3.3.1 Spreading and Modulation 26
3.4 Modem Transmitter 28
3.4.1 Error Protection 29
3.4.2 Interleaving and Rate Matching 31
3.4.3 WCDMA and TDMA Processing 32
3.4.4 Pulse Shaping and Up Conversion 32
3.4.5 RF Characteristics 32
3.4.6 Transmit Diversity 34
3.5 Mobile Radio Channel Aspects 36
3.5.1 Mean Pathloss and Shadow Characteristics 36
3.5.2 Multipath Characteristics 37
3.6 Modem Receiver Aspects 38
3.6.1 RF Characteristics 38
3.6.2 Detection of Direct Sequence Spread Spectrum Signals 39
3.6.3 Rake Receiver Structure 39
3.6.4 Joint Detection Receiver Structure 41
References 42

4 TDD Radio Interface 43
4.1 Overview 43
4.2 Protocol Architecture 45
4.3 Layer 1 Structure 48
4.3.1 Physical Channels 48
4.3.2 Transport Channels 55
4.4 Layer 1 Communication 59
4.4.1 Layer 1 Processing 59
4.4.2 Inter-Layer Communication 61
4.5 Layer 2 Structure 63
4.5.1 Logical Channels 63
4.5.2 Radio Bearers 64
4.6 Layer 2 Communication 65
4.6.1 Medium Access Control (MAC) Protocol 65
4.6.2 Radio Link Control (RLC) Protocol 71
4.6.3 Packet Data Protocols (PDCP) 77
4.6.4 BMC Protocol 79
4.7 Layer 3 Communication 81
4.7.1 Radio Resource Control (RRC) Protocol 81
Appendix 4.1 System Information Blocks 85
References 86

5 TDD Procedures 89
5.1 Introductory Concepts 89
5.1.1 RRC Modes and States 89
5.1.2 DRX/Sleep Mode 90
5.2 Overview of Procedures 93
5.3 PLMN/Cell Selection/Reselection Procedure 95
5.4 Random Access Procedure 97
5.5 Paging Procedures 99
5.5.1 Paging Types 99
5.5.2 Paging Process at Layer 2 and Above 100
5.5.3 Broadcast Paging 101
5.5.4 Paging at Layer 1 103
5.5.5 Dedicated Paging Example 104
5.6 RRC Connection Procedures 104
5.6.1 Procedure between Network Elements 104
5.6.2 Procedure between Protocol Entities 105
5.7 RAB/RB Establishment Procedures 106
5.8 RAB/RB Management Procedures 110
5.9 Power Control Procedures 114
5.10 UE Timing Advance Procedures 119
5.10.1 Initial Timing Advance 120
5.10.2 Steady-State Timing Advance 121
5.11 Measurements Procedures 122
5.11.1 Common UE Measurements 123
5.11.2 Specific UE Measurements 123
5.11.3 Measurement Types 123
5.11.4 Measurement Reporting Methods 125
5.11.5 Node B Measurements 127
5.12 Cell/URA Update Procedures 127
5.13 Handover Procedures 130
5.14 NAS Signaling Message Transmission Procedures 135
5.15 Data Transmission Initialization Procedures 136
5.15.1 Inter-Layer Procedure 138
5.16 End-to-End Communication Procedures 139
5.16.1 UE Registration Procedures 139
5.16.2 Authentication and Security 142
5.16.3 CS Call Control Procedures 143
5.16.4 PS Session Control Procedures 146
5.16.5 CS Call and PS Session Data Procedures 147
References 149

6 Receiver Signal Processing 151
6.1 Receiver Architecture 151
6.2 Channel Estimation 154
6.2.1 Post-processing 157

6.3 Data Detection 157
6.3.1 Introduction 157
6.3.2 Multi-User Detection 159
6.3.3 Zero-Forcing Block Linear Equalizer (ZF-BLE) JD 160
6.3.4 Minimum Mean Square Error Block Linear Equalizer (MMSE-BLE) Joint Detector 161
6.3.5 Zero Forcing Block Linear Equalizer with Decision Feedback (DF ZF-BLE) Joint Detector 161
6.3.6 Minimum Mean Square Error Block Linear Equalizer with Decision Feedback (DF MMSE-BLE) Joint Detector 162
6.3.7 Approximate Cholesky/LDL^H Factorization 162
6.3.8 Parallel Interference Cancellation (PIC) Detectors 165
6.3.9 Successive Interference Cancellers (SIC) Detectors 165
6.3.10 Implementation and Performance 166
6.4 Cell Search 169
6.4.1 Basic Initial Cell Search Algorithm 170
6.4.2 Basic Targeted Cell Search Algorithm 170
6.4.3 Hierarchical Golay Correlator 171
6.4.4 Auxiliary Algorithms 172
References 173

7 Radio Resource Management 175
7.1 Introduction 175
7.2 RRM Functions 177
7.2.1 Cell Initialization 177
7.2.2 Admission Control 178
7.2.3 Radio Bearer Establishment 179
7.2.4 Radio Bearer Maintenance 186
7.2.5 Cell Maintenance 190
7.3 Physical Layer RRM Algorithms 196
7.3.1 Basic Concepts 196
7.3.2 Dynamic Channel Assignment (DCA) Algorithms 200
References 207

8 Deployment Scenarios 209
8.1 Types of Deployment 209
8.2 Capacity and Coverage 210
8.2.1 Network Capacity 210
8.2.2 Analysis 211
8.2.3 TDD Capacity: Over-the-Rooftop Deployment 214
8.3 Coexistence 216
8.3.1 BS to BS Interference 217
8.3.2 UE to UE Interference 224
References 228

9 Alternate Technologies 229
9.1 WTDD-WLAN Comparison 229
9.1.1 System and Service Attributes of WLANs 229
9.1.2 Comparison of TDD and WLAN System and Service Attributes 231
9.1.3 Performance of 802.11b WLAN Systems 233
9.1.4 Comparison of UMTS TDD and 802.11b WLAN System Performance 235
9.1.5 Deployment Considerations for UMTS TDD and WLAN Systems 237
9.2 WTDD – TDSCDMA Comparison 237
9.2.1 TD-SCDMA in the Standards Evolution 237
9.2.2 Comparison 237
9.2.3 TD-SCDMA Potential Deployment Scenarios 239
References 240

Index 241

List of Figures

2.1 UMTS Architecture 6
2.2 Core Network (CN) Architecture for Release 99 7
2.3 CN Architecture for 3GPP Release 4 8
2.4 UTRAN Architecture 9
2.5 One RNS Providing CN Interface and Node B Resources to a Given UE 9
2.6 Use of Drift RNS When Different RNSs Provide CN Interface and Node B Resources to a Given UE 10
2.7 UMTS Protocol Layers 11
2.8 General Protocol Model for UTRAN Interfaces 12
2.9 Iub Interface Protocol Structure 13
2.10 Iu-CS Interface Protocol Structure 14
2.11 Iu-PS Interface Protocol Structure 15
2.12 Example Mapping of Applications to Traffic Classes 16
2.13 QoS Architecture 17

3.1 TDMA Aspects: Frames and Timeslots 21
3.2 Flexible Duplexing in Time Domain 22
3.3 Radio Bursts: Top to Bottom = Type 1 to Type 3; GP = Guard Period; CP = Chip Period 23
3.4 Location of TPC and TFCI Signaling Bits: Top = Downlink Burst; Bottom = Uplink Burst 24
3.5 Midamble Generation by Periodic Extension of Complex Midamble Code 24
3.6 Generation of Multiple ($K = 2K'$) Midambles 25
3.7 Synchronization Bursts 26
3.8 Basic Principle of Spreading 27
3.9 OVSF Spreading/Channelization Code Generation 27
3.10 WCDMA Aspects: Spreading and Scrambling 28
3.11 Essentials of Modem Tx-Processing 28
3.12 Convolutional Coders 29
3.13 Structure of Rate 1/3 Turbo Coder (dotted lines apply for trellis termination only) 30
3.14 Two Stages of Interleaving 31
3.15 Principle of 1st Interleaving 31
3.16 Pulse Shaping and Up Conversion 32

3.17 Spectrum Emission Mask 34
3.18 Transmit Diversity Schemes: (Top) Closed Loop; (Middle) Switched Open Loop – TSTD; (Bottom) Non-Switched Open Loop – SCTD 35
3.19 Tapped Delay Line Model for Multipath Fading Effects 38
3.20 Detection of Spread Spectrum Signals 39
3.21 Rake Receiver Structure 40
3.22 Joint Detection Receiver Structure 41

4.1 Layered Model for the Radio Interface 44
4.2 Concept of Radio Channels 44
4.3 Radio Interface Protocol Architecture 45
4.4 Mapping of Logical, Transport and Physical Channels 48
4.5 Physical Channel Examples 50
4.6 MultiChannel Examples: (Top) Code domain; (Bottom) Time domain 50
4.7 Structure of Synchronization Channel 52
4.8 Paging Indicators in a PICH Burst 54
4.9 Structure of a PICH/P Block 55
4.10 Example of a Transport Channel 56
4.11 Example of a CCTrCH 57
4.12 Paging Sub-Channels and Association of PICH and PCH blocks 58
4.13 Peer-to-Peer Communication of a Transport Block Set by Layer 1 60
4.14 Service Example of 64 kbps Traffic and 2.5 kbps Signaling Data 62
4.15 Interfaces between Physical and Higher Layers 62
4.16 Illustration of PDU, SDU Concepts 65
4.17 MAC Architecture: UE (top) and RNC (bottom) 66
4.18 MAC Processing at the UE 68
4.19 MAC Processing at RNC 69
4.20 MAC PDU 70
4.21 Example MAC PDU Formats 70
4.22 MAC Inter-Layer Primitives 71
4.23 RLC Architecture 71
4.24 Transparent Mode RLC Entity Peer-to-Peer Communication 74
4.25 Unacknowledged Mode RLC Entity Peer-to-Peer Communication 75
4.26 Acknowledged Mode RLC Entity Peer-to-Peer Communication 75
4.27 RLC Inter-Layer Primitives 77
4.28 PDCP Architecture 77
4.29 PDCP PDU Formats: (Top to Bottom) (1) No Header PDU, (2) PDU with Header, (3) PDU with Header and Sequence Number 78
4.30 PDCP Inter-Layer Primitives 79
4.31 BMC Architecture 80
4.32 BMC Inter-Layer Primitives 80
4.33 RRC Model: UE View 82
4.34 RRC Inter-Layer Primitives 85

5.1 UE Mode and State Transitions 91
5.2 Optimization of Transitions Triggered by the UTRAN According to UE Activity and UE Mobility 92

5.3 DRX Cycle 92
5.4 PLMN/Cell Selection Procedure 96
5.5 Cell Search Procedure 97
5.6 RACH Initial Access Procedure 99
5.7 System Information Regarding RACH/T 100
5.8 CN Paging Procedure across Network Elements 101
5.9 Paging Procedure across Protocol Layers 102
5.10 Paging Indicators and Paging Groups 103
5.11 Paging for an UE in RRC Connected Mode (Cell_DCH or Cell_FACH States) 104
5.12 RRC Connection Establishment Procedure – Network Element View 105
5.13 RRC Connection Establishment Procedure – Protocol Entity View 106
5.14 Example RAB Establishment Procedure – Network Element Viewpoint 107
5.15 Radio Bearer Establishment Procedure 109
5.16 RAB Modification – Network Element Viewpoint 111
5.17 RB Reconfiguration – Radio Interface Protocol Viewpoint 113
5.18 Physical Channel Reconfiguration – Radio Interface Protocol Viewpoint 115
5.19 Downlink Power Control Scheme 116
5.20 Downlink Power Control Procedure 117
5.21 Uplink Power Control Scheme 118
5.22 Working of the Inner Loop Uplink Power Control 118
5.23 UE Timing Advance Concept 119
5.24 Initial TA Procedure 120
5.25 Steady-State Timing Advance Procedure 122
5.26 Example UE and Node B Measurement Procedures 123
5.27 UE Measurement Control System Information 124
5.28 UE Measurement Control by Dedicated Signaling 124
5.29 Hysteresis Parameter for Measurements 124
5.30 Use of Time-to-Trigger Parameter 127
5.31 Cell Update with SRNS Relocation 128
5.32 URA Update without SRNC Relocation 129
5.33 Inter-Layer Procedure for Cell Update 130
5.34 Handover Types 131
5.34 (*continued*) 132
5.35 Inter-RNC Handover Procedure (Peer-to-Peer Procedure) 133
5.36 Inter-Node B Handover Procedure (Inter-Layer Procedure) 135
5.37 Uplink Direct Transfer 136
5.38 Downlink Direct Transfer Procedure 136
5.39 Data Flow Initialization Procedure (Peer-to-Peer) 137
5.40 Data Flow Initialization Procedure (Inter-Layer) 138
5.41 UE Registration on CS Domain 140
5.42 UE Registration on PS Domain 141
5.43 Authentication and Security 142
5.44 Call Control Setup Signaling Procedure 144
5.45 Call Control Connect Signaling Procedure 145
5.46 Activate PDP Context Signaling Procedure 147

5.47 CS Overall Procedure 148
5.48 PS Overall Procedure 149

6.1 BS Receiver Architecture 152
6.2 Receiver Front End Processing Details 152
6.3 Physical Channel Processing Details 153
6.4 Transport Channel Processing 153
6.5 UE Receiver Architecture 153
6.6 Derivation of the Midamble Code Set from a Single Basic Midamble Code 155
6.7 Model for Received Signal 156
6.8 Raw BER vs. Eb/No in ITU Pedestrian Type B Channel 158
6.9 Discrete-Time Baseband Model of Multi-user Signal Transmission and Reception 159
6.10 A Typical PIC Detector 165
6.11 Raw BER vs Eb/No Performance of MMSE-JD in Non-Fading Channel 167
6.12 Raw BER vs Eb/No Performance of ZF-BLE JD and M, MMSE-BLE JD and Approx. MMSE-BLE JD with Known Pedestrian-A Channel 167
6.13 Raw BER vs Eb/No Performance of Approx. MMSE-BLE JD and PIC Detectors in Indoor-A channel 168
6.14 Raw BER vs Eb/No Performance of JD and SIC-JD 168
6.15 Physical Synchronization Channel (SCH/P) Timeslot 169
6.16 Initial Cell Search Algorithm Steps 171
6.17 Hierarchical Golay Correlator 171
6.18 Example Algorithm for Start-up AFC 172

7.1 Steps Involved in Radio Bearer Establishment 180
7.2 Example Mapping of Symmetric 12.2 kbps RT service 187
7.3 Example DL TPC Behavior for Steady-State Step Size = 0.25, Transient Step Size = 3 dB, Initial Target SIR = 9 dB and Target BLER = 0.1 189
7.4 Example Performance of UL Outer Loop Power Control 191
7.5 Overview of FACH Flow Control (DCCH/DTCH Mapped to FACH) 193
7.6 Blocked Codes 194
7.7 Alternate Code Allocation 195
7.8 Performance of 3 DCA Algorithms (Uplink - Downlink) 204

8.1 Example of Cell Layout 213
8.2 Example Coverage at 12.2 kbps 213
8.3 Example of Cell Layout 214
8.4 Example Capacity Numbers for Various Services 215
8.5 TDD and FDD UL Carriers 217
8.6 TDD–FDD Interference Scenarios 218
8.7 Interference Scenarios between TDD Systems in Adjacent Bands 219
8.8 Three Factors Affecting Interference 220
8.9 Same-Site TDD Networks 220
8.10 Same-Area TDD Networks 221
8.11 Timeslot Allocation 223

8.12 Basic UE–UE Interference 224
8.13 Deployment Scenario Used for the Simulations 225
8.14 Detail of the Building Containing the TDD Pico-Cells 225
8.15 TDD Outage Probability as a Function of Distance 227

9.1 Aggregate Throughput of 802.11b-based WLANs 234
9.2 Cell Layout and Cell Throughput (Capacity) 234
9.3 Comparison of WLAN and TDD Throughput/Cell for Indoor and Outdoor Micro Deployments 236
9.4 TD-SCDMA Evolution 238
9.5 Example Deployment Scenarios 240

List of Tables

1.1 Classification and numbering of 3GPP specs 3
1.2 TDD specifications 4

2.1 Value Ranges of UMTS Bearer Service Attributes 18

3.1 (Time-Varying) Channel Impulse Characterization 38

4.1 Radio Channels 47
4.2 SSC Modulation and Code Group/Timing Offset Association 52
4.3 Code Groups and Cell Parameters 53
4.4 Number of Paging Indicators per Burst 54
4.5 Channel Coding Scheme 59
4.6 System Information Blocks 85

5.1 UE States and Applicable Measurement Types 126

6.1 TDD Burst Parameters 155
6.2 Relative Complexity of MUD Algorithms 166

7.1 RRM Functions and Algorithms 176
7.2 Mapping of BLER Requirement 183
7.3 RUs and Code Sets for Service Rates in the Downlink 185
7.4 RUs and Code Sets for Service Rates in the Uplink 185
7.5 Example Parameters for 12.2 kbps RT service 186

8.1 TDD Capacity vs Traffic Asymmetry 216
8.2 Robustness of Capacity Relative to Cell Size 216
8.3 Robustness of Capacity Relative to Indoor/Outdoor Users 216
8.4 TDD and FDD Adjacent Channel Leakage Power Requirements 221
8.5 TDD Transmitter ACLR Requirements 221
8.6 FDD and TDD BS ACS 222
8.7 TDD → FDD Co-sited Coexistence Scenarios 223
8.8 TDD → FDD Same Area Coexistence Scenarios 224
8.9 System Characteristics of the TDD Pico System 226
8.10 System Characteristics of the FDD Macro System 226

9.1 Comparison of HCR and LCR TDDs 239

Preface

This book is an outgrowth of the pioneering development work done by InterDigital Communication Corporation in 3rd Generation TDD WCDMA Technology. Many engineers and managers were involved in this development, which spanned a wide range of technology areas, including system architecture, radio interface, radio modem design, radio resource management and hardware/software implementation. In addition, TDD WCDMA technology had many direct and indirect contributors across the globe in the context of the development of the 3GPP TDD WCDMA Standard.

During the late 2002–early 2003 time period, InterDigital executive management took a decision to produce a book on the collective work done at InterDigital on TDD WCDMA technology. I was entrusted with the daunting task of bringing together this vast body of TDD WCDMA expertise and presenting it in a comprehensive, logically connected and readable form. I hope I have met these objectives.

After a quick introduction in Chapter 1 to 3rd Generation TDD WCDMA technology as well as 3GPP Standards, Chapters 2 through 5 address TDD WCDMA technology from the 3GPP Standards point of view. Chapter 2 presents a succinct account of UMTS system architecture. Next, the essential principles of the TDD WCDMA radio interface are presented in Chapter 3. On the basis of these principles, a detailed and comprehensive exposition of the TDD WCDMA radio interface is given in the next two chapters. The structural aspects, including the layered protocol model, protocols and messages, are described in Chapter 4. The interactive dynamic procedural aspects of radio interface are detailed in Chapter 5.

The remaining chapters are devoted to the aspects of TDD WCDMA technology not covered by 3GPP Standards. Chapter 6 deals with signal processing in TDD WCDMA receivers, including advanced topics such as multiuser detection. Chapter 7 addresses radio resource management, which is especially challenging for TDD WCDMA. In Chapter 8, we cover various aspects of TDD WCDMA deployment, both by itself and in conjunction with its FDD WCDMA counterpart. Finally, Chapter 9 presents a brief comparison between TDD WCDMA, WLAN and Narrowband TDD WCDMA or TDSCDMA.

This book may be used as a reference book by practicing engineers, who are involved in the development of TDD WCDMA or TDSCDMA technologies. It may also be used as a textbook for an advanced graduate level course in wireless communication systems.

Prabhakar Chitrapu
Prabhakar.Chitrapu@Interdigital.com

Acknowledgments

It is now my pleasant duty to express my heartfelt gratitude to several coworkers and friends at InterDigital, without whose help, encouragement and input, this book would not be.

First and foremost, I would like to thank the Executive Management of InterDigital, for having the foresight and wisdom to undertake this project and, in particular, for giving me the time, facilities and resources to execute it. In particular, I would like to thank Rip Tilden (COO) who enthusiastically supported the book idea from the very beginning; Rich Fagan (CFO) who always had an encouraging word to add during the project and Howard Goldberg (CEO) from whose vision all of us at InterDigital benefit daily. I would also like to thank Jack Indekeu (VP, Marketing) for handling all the project-related matters internally at InterDigital and for interfacing with John Wiley.

Next, I would like to thank the many engineers at InterDigital, who took the time to patiently explain their work, provide verbal and written inputs and review multiple drafts of the book chapters. Brian Kiernan (SVP, Standards) provided aid and guidance throughout the project and assisted with Chapter 1. Narayan Menon and Janet Stern gave tremendous help in reviewing and writing the chapters on system architecture, TDD radio interface, and TDD procedures. Ana Iacono was a constant source of help and encouragement from the beginning to the end of the project. Starting from the book outline, she helped with the chapter on radio interface as well as the chapter on radio resource management. Steve Terry provided detailed inputs to the chapter on radio interface initially. Charlie Dennean provided several inputs to power control and other system issues. John Tomici and Ken Kearney gave inputs to and reviewed the TDD procedures chapter. Don Grieco and John Haim reviewed and improved the chapters on TDD WCDMA fundamentals, as well as receiver signal processing. Christopher Cave, Teresa Hunkeler and Akbar Rahman provided valuable inputs to the chapter on radio resource management. Teresa also provided much help with the chapter on WLAN Comparison and gave constant encouragement during the entire project. Vincent Roy, Gregg Charlton and Dr. Eldad Zeira provided thorough and critical comments and inputs to the chapter on deployments. Eldad also provided valuable inputs to the TDSCDMA discussions.

I would also like to specially thank Kiran Vanganuru (graduate co-op student from Virginia Tech) for reading the entire book and helping me with valuable comments and for producing the Index list. Similarly, I would like to thank Adam Kaewell (summer

intern student from Penn State University) for helping with the proof reading of some of the initial chapters and the drawing of several figures.

I would like to thank Aaron Schantz for the tedious and careful work involved in preparing the final documents for sending to the publisher. Thanks are also due to Lisa Watkins for handling the administrative matters with 3GPP and UMTS Forum.

Finally, I wish to express my special thanks to Dr. Alain Briancon (CTO), who gave me this opportunity and expressed unswerving confidence in my ability to pull this project through. My thanks are also due to Alain for writing the Foreword.

Foreword

FROM PAPER TO REALITY

WCDMA (wideband code division multiple access) is fulfilling its potential as the key foundation for third-generation public mobile services. The WCDMA standards documents have been developed by the Third-Generation Partnership Project, as the evolution from GSM, the leading second-generation mobile standard. Many companies, InterDigital Communications Corporation among them, have poured innovative energy, intellectual property and technology capital to develop the architectural foundation of a mobile system that supports voice, data, multimedia, games, e-commerce, and all the many applications that have been and will be dreamed as consumers make their life mobile.

The reason for WCDMA is the need to cope with growing mobile voice and data volumes and falling voice and data unit prices in a way that is more spectrally efficient and cost-effective than 2G/2.5G solutions such as GSM, GPRS, EGPRS and IS-95.

WCDMA comprises two main technologies equal in status in the standards. One technology is called FDD (frequency-division duplex), which entails simultaneous operation on different downlink (to the subscriber) and uplink (from the subscriber) radio frequencies. Regulators around the world have allocated pairs of 5-MHz channels near 2,000 MHz that are suitable for FDD-WCDMA operation, and commercial operation has already begun in several countries.

The other WCDMA technology is called WTDD (wideband time-division duplex WCDMA), which entails ping-pong operation in both directions of transmission on a single radio frequency channel. WTDD is a standard that was originally proposed by the European Telecommunications Standards Institute 'Delta' group, and the specifications for it were finalized in 1999. Airtime on the single frequency channel is divided into timeslots that are used either in the uplink or downlink direction depending on the ratio of uplink to downlink traffic. WTDD uses 5-MHz radio channels like FDD-WCDMA. Many countries have allocated unpaired 5-MHz channels that are suitable for WTDD, and in some countries additional unpaired 5-MHz channels are also available for operators to use on an unlicensed basis.

FDD AND WTDD: THE WCDMA COMPLEMENTS

Completed, documented and tested, WCDMA is now being successfully deployed throughout the world. This started with FDD deployment supporting mostly voice and early data applications and the more advanced development status of the technology.

WTDD will play a complementary role to FDD-WCDMA. WTDD adds capacity to FDD in a way that is more cost-effective than by expanding with FDD-WCDMA alone, because WTDD can support asymmetric data better. WTDD is also more cost-effective than FDD-WCDMA to deploy broadband mobile data over urban areas, and more cost-effective than either FDD-WCMA or 802.11 in providing coverage in hot spots and 'hot zones' (contiguous zones of hot spot picocells).

WTDD architecture has been designed to be harmonized and aligned with the FDD architecture, sharing chip rate processing, protocol stacks, and many of common blocks allowing dual mode devices to be designed. Seamless handoffs between FDD and WTDD were built in as basic, thus avoiding some of the early issues between FDD and GSM.

THE RISE OF ASYMMETRIC APPLICATIONS

More than before, wireless operators have an opportunity to significantly increase their revenues and profits with wireless data offerings. The rollouts of WAP and I-mode services have been analyzed and lessons have been learned. Camera phones are becoming common, MMS services are interoperable. Wireless data services and applications are poised to grow significantly in the next couple of years, in both subscriber uptake and individual subscriber usage, potentially becoming the basis of profitability for operators.

While narrowband, slow-speed data services are currently available from most operators, current mobile data services are characterized by abbreviated interfaces and text or low-resolution graphics displayed on tiny screens. The very nature of these services limits the applications to lower-value utilities. Moreover the low spectral efficiency of 2.5G systems renders these services too costly for mass-market adoption.

Subscribers eagerly require the rich multimedia applications to which they are accustomed in today's wired Internet. Compact, portable electronic terminals with sufficient computational power, rich displays and software applications have evolved to enable this experience on a nomadic and portable devices.

Most emerging broadband data applications are asymmetric, whereby the mobile terminal typically receives far more data than the server or host. In the case of wireless data, with the limited input capability of most wireless terminal equipment, the average session is likely to be even more asymmetric than a wired connection. For example, if the typical data applications are sending and receiving e-mail, web browsing, file transfers and multimedia streaming, average downlink/uplink asymmetries can have a wide range but might be of the order of perhaps 2, 6, 10 or more.

FDD-WCDMA allocates equal spectrum resources to the uplink and downlink, so some resources are wasted when traffic is asymmetric. In contrast, WTDD can allocate timeslots to the downlink or the uplink as required to carry the actual data load. This makes it perfectly suited to support these asymmetric data and thus let the operator support these applications while minimizing the impact on the network. The rise of asymmetric applications, for both businesses and consumers, bode well for the adoption of WTDD.

IMPLEMENTATION KNOW-HOW IS KEY TO DEVELOPING THE TECHNOLOGY VALUE OF WTDD

One of the most important elements of the WTDD technology revealed in this book is the sheer importance of the implementation know-how. This is something that InterDigital learned during its multi-year development of the technology.

CDMA systems are generally interference-limited, whereby traffic increases to a point at which the noise floor degrades the carrier to interference ratio to the threshold of the receiver detection capability. Interference can be classified as inter-cell and intra-cell.

Multi-User Detection can provide significant radio link carrier-to-interference performance improvement through cancellation of interference from other mobiles within a given cell. MUD can be very computationally intense. It is not generally practical in FDD-CDMA platforms because a large number of mobiles can potentially coexist in a single FDD-WCDMA carrier. In contrast, because WTDD divides the mobile transmissions in a cell into timeslots, there are far fewer simultaneous users and interferers per timeslot than in the FDD case, making MUD treatment practical for TDD in the handset. MUD, simply put, provides the processing power of a base station in the portable device. The inclusion of MUD in a WTDD system effectively eliminates inter-cell interference even under full loading, a benefit that is unique in WCDMA.

In WTDD systems, the radio interference is different in each timeslot. The Radio Resource Management (RRM) system in the WTDD network essentially solves the C/I link power equation for each code in each timeslot. Through the judicious assignment of timeslots, an RRM can appreciably reduce intra-cell interference.

MUD and RRM enable TDD to provide continuous high-speed coverage capabilities that do not require reliance on soft handover, as in FDD. During the course of the technology development, we discovered that MUD and RRM were critical components of the WTDD solution.

BEYOND WTDD

Time division duplex has been extended beyond WTDD. Channel reciprocity inherent in TDD enables the base station to compensate for cheaper, poorer-performing devices. Also, TDD potentially enables longer device battery life by allowing the receiver to shut down many internal power-consuming functions during non-allocated timeslots.

The TD-SCDMA standard, a variant of WTDD targeted for the Chinese market, is building on the legacy and invention of WTDD. Targeted to support both voice and data services in one integrated air interface, it enjoys significant support as well.

In the wireless LAN arena, RRM concepts similar to those developed for WTDD are finding their way into key products (802.11-based access point and terminal cards). Some of the hooks for bring additional performance are starting to be included in later versions of the standards.

FROM REALITY TO PAPER (AGAIN)

Dr Chitrapu's book is the first comprehensive description of the many aspects of the WTDD standard, technology, deployment, and key implementation knowhow and benefits.

It is a timely addition to the emerging body of literature on WCDMA. It places WTDD in its rightful place as the logical enabler of asymmetric services.

I very much welcome the publication of this book as a focused introduction to this component of the whole WCDMA solution. I thank Dr Chitrapu and the many engineers at InterDigital Communications Corporation for their contribution in bringing this standard and technology alive.

Dr Alain C. Briancon
Executive Vice-President and Chief Technology Officer
InterDigital Communications Corporation

Acronyms

2G	Second Generation
3GPP	Third Generation Partnership Project
AAL	ATM Adaption Layer
AAL2	ATM Adaption Layer – Type 2
AAL5	ATM Adaption Layer – Type 5
ACIR	Adjacent Channel Interface Ratio
ACK	Acknowledgement
ACLR	Adjacent Channel Leakage Power Ratio
ACPR	Adjacent Channel Power Ratio
ACS	Adjacent Channel Selectivity
AGC	Automatic Gain Control
ALCAP	Access Link Control Application Part
ARQ	Automatic Repeat Request
AS	Access Stratum
ASC	Access Service Class
ASIC	Application Specific Integrated Circuit
ATM	Asynchronous Transfer Mode
AWGN	Additive White Gaussian Noise
BCCH	Broadcast Control Channel
BCFE	Broadcast Control Functional Entity
BCH	Broadcast Channel
BER	Bit Error Rate
BLE	Block Linear Equalizer
BLER	Block Error Rate
BPSK	Binary Phase Shift Keying
BS	Base Station
BSC	Base Station Controller
BSS	Base Station Subsystem
BTS	Base Transceiver Station
CB	Cell Broadcast
CBR	Constant Bit Rate
CC	Connection Control, Call Control

CCCH	Common Control Channel
CCH	Control Channel
CCPCH	Common Control Physical Channel
CCTrCH	Coded Composite Transport Channel
CDMA	Code Division Multiple Access
CFN	Connection Frame Number
CN	Core Network
CRC	Cyclic Redundancy Check
CRNC	Controlling Radio Network Controller
CS	Convergence Sublayer, Circuit Switched
CTCH	Common Traffic Channel
DB	Decibel
DCA	Dynamic Channel Allocation
DCCH	Dedicated Control Channel, Dedicated Control Channel Messages
DCFE	Dedicated Control Functional Entity
DCH	Dedicated Channel
De-MUX, DEMUX	Demultiplexer
DF	Decision Feedback
DFT	Discrete Fourier Transform
DL	DownLink (Forward Link)
DPCCH	Dedicated Physical Control Channel
DPCH	Dedicated Physical Channel
DPDCH	Dedicated Physical Data Channel
DRNC	Drift Radio Network Controller
DRNS	Drift Radio Network Subsystem
DRX	Discontinuous Reception
DS-CDMA	Direct-Sequence Code Division Multiple Access
DSCH	Downlink Shared Channel
DSP	Digital Signal Processor
DTCH	Dedicated Traffic Channel
DTX	Discontinuous Transmission
EIRP	Equivalent Isotropic Radiated Power
ETSI	European Telecommunications Standards Institute
PIC	Parallel Interference Canceller
FACH	Forward Access Channel, Forward Link Access Channel
FCS	Frame Check Sequence
FDD	Frequency Division Duplex
FEC	Forward Error Correction, Forward Error Control
FER	Frame Error Rate
FFT	Fast Fourier Transform
FHT	Fast Hadamarad Transform
FN	Frame Number
FP	Frame Protocol
GHz	Gigahertz
GP	Guard Period

GPRS	General Packet Radio Service
GSM	Global System for Mobile Communication
GTP	GPRS Tunneling Protocol
HCS	Hierarchical Cell Structure
HGC	Hierarchical Golay Correlator
HO	Handover
Hz	Hertz
ID	Identifier
IEEE	Institute of Electrical and Electronic Engineers
IFFT	Inverse Fast Fourier Transform
IMSI	International Mobile Subscriber Identity
IMT-2000	International Mobile Telecommunications-2000
IP	Internet Protocol
ISCP	Interface Signal Code Power
ITU	International Telecommunications Union
JD	Joint Detection
Kbps	kilo-bits per second
Ksps	Kilo-symbols per second
KHz	KiloHertz
L1	Layer 1 (physical layer)
L2	Layer 2 (datalink layer)
L3	Layer 3 (network layer)
LAN	Local Area Network
MAC	Medium Access Control
MAI	Multiple-Access Inteference
MAP	Mobile Application Part
Mcps	Mega Chip Per Second
ME	Mobile Equipment
MHz	Megahertz
MIPS	Million Instructions per Second
MM	Mobility Management
MMSE-BLE	Minimum Mean Square Error-Block Linear Equalizer
MO	Mobile Origination
MS	Mobile Station
MSC	Mobile Services Switching Center, Message Sequence Chart
MT	Mobile Termination
MUD	Multi-user Detection
MUI	Mobile User Identifier
MUX, Mux	Multiplexer
NAS	Non-Access Stratum
NBAP	Node B Application Part, Nobe B Application Protocol
NRT	Non-Real Time
OPC	Open loop Power Control
OVSF	Orthogonal Variable Spreading Factor (codes)
PC	Power Control

P-CCPCH, PCCPCH	Primary Common Control Physical Channel
PCH	Paging Channel
PCPCH	Physical Common Packet Channel
PDN	Public Data Network
PDSCH	Physical Downlink Shared Channel
PDU	Protocol Data Unit
PHY	Physical Layer
PhyCH	Physical Channel
PI	Paging Indication, Page Indicator
PIC	Parallel Interference Canceller
PICH	Page Indication Channel
PL	Puncturing Limit
PLMN	Public Land Mobile Network
PN	Pseudo Noise
PNFE	Paging and Notification Control Functional Entity
PRACH	Physical Random Access Channel
PS	Packet Switched
PSC	Primary Synchronization Code
PSCCCH	Physical Shared Channel Control Channel
PSCH	Physical Synchronization Channel, Physical Shared Channel
PSTN	Public Switched Telephone Network
PUSCH	Physical Uplink Shared Channel
QoS	Quality of Service
QPSK	Quaternary Phase Shift Keying
RAB	Radio Access Bearer
RACH	Random (Reverse) Access Channel
RAN	Radio Access Network
RANAP	Radio Access Network Application Part
RBC	Radio Bearer Control
RF	Radio Frequency
RFE	Routing Functional Entity
RL	Radio Link
RLC	Radio Link Control
RNC	Radio Network Controller
RNS	Radio Network Subsystem
RNSAP	Radio Network Subsystem Application Part
RNTI	Radio Network Temporary Identity
RRC	Radio Resource Control
RRM	Radio Resource Management
RSCP	Received Signal Code Power
RSSI	Received Signal Strength Indicator
RT	Real Time
RU	Resource Unit
RX	Receive, Receiver
SAP	Service Access Point

S-CCPCH, SCCPCH	Secondary Common Control Physical Channel
SCH	Synchronization Channel
SDCCH	Standalone Dedicated Control Channel
SDU	Service Data Unit
SF	Spreading Factor
SFN	System Frame Number
SGSN	Serving GPRS Support Node
SIC	Successive Interference Canceller
SIM	Subscriber Identity Module
SINR	Signal-to-Interference-and-Noise-Ratio
SIR	Signal to Interference Ratio
SMS	Short Message Service
SNR	Signal-to-Noise Ratio
SRNC	Serving Radio Network Controller
SRNS	Serving Radio Network Subsystem
SSC	Secondary Synchronization Code
STTD	Space Time Transmit Diversity
TCH	Traffic Channel
TD-SCDMA	Time Division- Synchronous Code Division Multiple Access
TDD	Time Division Duplex
TDMA	Time Division Multiple Access
TE	Terminal Equipment
TF	Transport Format
TFC	Transport Format Combination
TFCI	Transport Format Combination Indicator
TFCS	Transport Format Combination Set
TFI	Transport Format Indicator
TFS	Transport Format Set
TPC	Transmit Power Control
TR	Technical Report
TrCH	Transport Channel
TS	Time Slot
TSG	Technical Specification Group (3GPP)
TSTD	Time Switched Transmit Diversity
TTI	Transmission Timing Interval
TX	Transmit, Transmitter
UARFCN	UTRA Absolute Radio Frequency Channel Number
UARFN	UTRA Absolute Radio Frequency Number
UE	User Equipment
UMTS	Universal Mobile Telecommunications System
UP	User Plane
URA	UTRAN Registration Area
USCH	Uplink Shared Channel
USIM	UMTS Subscriber Identity Module (User Service Identity Module))

UTRA	UMTS Terrestrial Radio Access
UTRAN	UMTS Terrestrial Radio Access Network
VCO	Voltage Controlled Oscillator
W-CDMA	Wideband Code Division Multiple Access
WG	Working Group (3GPP)
ZF-BLE	Zero Forcing Block Linear Equalizer

1

Introduction

The late 1980s and early 1990s saw the world-wide development of Digital Cellular Mobile Communication Standards. Growing out of existing regional analog mobile radio standards, these digital versions are commonly referred to as 2nd Generation (2G) mobile standards. Foremost among them is the pan-European Group Special Mobile (GSM) Standard, developed by the European Telecommunication Standards Institute (ETSI). This is followed by the TIA/EIA-54/-136 North American TDMA and TIA/EIA-95 cdmaOne Standards, developed by the Telecommunications Industry Association (TIA) in the USA and the Personal Digital Cellular (PDC) Standard, developed by the Japanese Association of Radio Industries and Businesses (ARIB).

Driven by the rapid deployment and growth of these 2nd generation standards, and motivated by visions of a single worldwide mobile standard, the International Telecommunications Union (ITU) began coordinating development of a 3rd Generation Mobile Radio Interface standard, referred to as International Mobile Telecommunications-2000 (IMT-2000). During this process, a number of different radio technology proposals were put forward and considered by the ITU. However, the hope of a single worldwide radio standard did not materialize. Instead, the different proposals were unified into a 'family' of standards, each with its own unique characteristics. The individual parts of this 'family' were then relegated to the different proposing standards organizations for further development.

With an eye towards worldwide coordination and cooperation, ETSI, along with a number of other standards organizations, formed a new group called the 3rd Generation Partnership Project (3GPP). This group was created specifically to develop 3G mobile standards based on the modification and evolution of the GSM network and all its related radio technologies. This includes the existing GSM/GPRS TDMA-based radio technology and its evolved form, EDGE, as well as a 'harmonized' version of the ETSI Universal Mobile Telecommunications System (UMTS) proposal, which encompassed two related wideband-CDMA (WCDMA) air interfaces – FDD and TDD. A variant of the TDD air interface using less RF bandwidth was later included.

Similarly, with the TIA as lead, 3GPP2 was formed to develop specifications based on the evolution of the North American TIA/EIA-95 CDMA radio interface into cdma2000.

Wideband TDD: WCDMA for the Unpaired Spectrum P.R. Chitrapu
© 2004 John Wiley & Sons, Ltd ISBN: 0-470-86104-5

This text concentrates on the WCDMA TDD radio interface standard being developed by 3GPP, officially called High Chip Rate (HCR) TDD, and commonly referred to as Wideband TDD (WTDD). We shall use these terms interchangeably.

1.1 WTDD TECHNOLOGY

WTDD is a radio interface technology that combines the best of WCDMA and TDMA. As the name indicates, WTDD performs duplexing in the time domain by transferring uplink and downlink data in different timeslots. Thus, it requires only a single frequency for operation. In contrast, FDD duplexes the uplink and downlink into different frequencies, thus requiring a frequency pair. The single frequency of operation provides an intrinsic advantage for WTDD in both the short and the long term. Indeed, WTDD may become a key communications solution as the new spectrum is allocated for commercial use.

Within WTDD, the number of timeslots allocated for the uplink and downlink can be arbitrarily set and even changed during operation in response to varying traffic demands. This inherent flexibility of WTDD makes it ideally suited for supporting asymmetric data traffic, such as web browsing.

The WTDD radio interface forms a part of the over-the-air link between the user equipment and the UMTS Radio Access Network, which, in turn, connects to the core network of a complete UMTS system.

Together with the UMTS Radio Access and Core Networks, the WTDD radio interface supports a variety of services, including voice and data applications at a range of data rates up to 2 Mbps with the potential to go even higher.

It is also worth mentioning that WCDMA TDD and FDD have a lot in common, so that dual mode devices or equipment can be developed with only a marginal cost increase.

1.2 OTHER ADVANCED RADIO INTERFACE TECHNOLOGIES

There are a number of new radio interfaces with advanced capabilities like WTDD. In many cases these are complementary to WTDD, so that dual mode user equipment may be efficiently built, and close network interworking is possible.

First and foremost is WCDMA FDD, the other radio interface being developed by 3GPP, which is very closely coupled to and complementary to WTDD. Both radio interfaces share the same WCDMA principle and many of the same parameters, such as chip rates. Network interworking, including handovers, between WCDMA FDD and WTDD has been well studied and standardized. Coexistence between the two radio interfaces has also been extensively studied and understood in terms of minimal mutual interference.

3GPP has also standardized a variant of WTDD which occupies less RF spectrum compared to WTDD. Officially called Low Chip Rate TDD (LCR-TDD) because the 'chip rate' (which determines the RF bandwidth of a CDMA signal) is 1.28 Mcps compared to 3.84 Mcps for WTDD, this variant is sometimes called Narrowband TDD. It is also referred to as Time Division-Synchronous CDMA (TD-SCDMA) because uplink synchronization is required, unlike in WTDD. Wideband TDD and narrowband TDD have comparable capabilities and it is expected that both will be deployed, although not together. A more detailed comparison of these two forms of TDD is given in the last chapter of this book.

Another set of radio interfaces, developed for Wireless LAN applications by the IEEE 802 LAN/MAN Standards Committee operate in license-exempt frequency bands in the 2.4 and 5 GHz range. Referred to as 802.11b, 802.11a, and 802.11 g, these are very high speed (11–54 Mbps) radio interfaces designed for data applications at short range. Again, a detailed comparison with WTDD is given in the last chapter of this book.

Also within IEEE 802 are other high-speed radio interfaces currently being developed for Wireless Wide Area and Metropolitan Area Networks (such as 802.16), and for Wireless Personal Area Networks (802.15). Finally, there are the radio interfaces being developed by 3GPP2. These are also CDMA based and are being evolved from the US TIA/EIA-95 CDMA standard. Generally referred to as cdma2000, there are various extensions such as cdma2000 1x EV-DO, cdma2000 1x EV-DV, and cdma2000 3x. These radio interfaces are outside the scope of this book.

1.3 3GPP STANDARDS FOR WIDEBAND TDD (WTDD)

WTDD is part of a set of specifications generated by the 3GPP organization (www.3gpp.org), a partnership project between several regional standards organizations. This standardization work is performed within 3GPP by a number of Technical Specification Groups (TSGs).

The specifications developed by the various working groups are classified and numbered into the following categories, as shown in Table 1.1.

Each of these 'Numbered Series' contains both Technical Specifications (TSs) and Technical Reports (TRs). The TSs are the normative documents that actually define the standard. TRs are mainly for information. For example, the 25 series of documents deals with the Radio Aspects of both WCDMA FDD and TDD. Within this series, the current WTDD specifications are grouped as shown in Table 1.2.

In Table 1.2, the acronym HSDPA stands for High Speed Downlink Packet Access, which is a recent packet-oriented initiative that employs advanced radio techniques such as Adaptive Modulation and Coding. This illustrates the fact that the specifications are

Table 1.1 Classification and numbering of 3GPP specs

Subject of specification series	Series
Requirements	21 series
Service aspects	22 series
Technical realization	23 series
Signaling protocols – UE to Network	24 series
Radio aspects	25 series
CODECs	26 series
Data	27 series
Signaling protocols – RNS to CN	28 series
Signaling protocols – intra-fixed network	29 series
User Identity Module (SIM/USIM)	31 series
O and M	32 series
Security aspects	33 series
SIM and test specifications	34 series
Security algorithms	35 series

Table 1.2 TDD specifications

Subject	TS Number(s)
Layer-1	25.201, 25.102, 25.105, 25.221 through 25.225
Layer-2	25.321 through 25.324
Layer-3	25.331
Iub	25.426, 25.427, 25.430 through 25.435.
Iur	25.420 through 25.427
Iu	25.402, 25.410 through 25.415, 25.419
Others	Protocols (25.301)
	Procedures (25.303, 25.304)
	RRM (25.123)
	Testing (25.142)
	UE Capabilities (25.306)
	UTRAN (25.401)
	MBMS (25.346)
	HSDPA (25.308),
	OAM (25.442), etc.

constantly evolving to incorporate new features and capabilities. As such, they are also categorized by Release numbers: Release 99 was the first complete release of TSs, followed by Release 4 and 5. Release 6 is presently under development.

1.4 OVERVIEW OF THE BOOK

In the next chapter, we begin with an overview of the UMTS System architecture, including the WTDD-based Radio Access Network. We also discuss briefly the services provided by the UMTS system and supported by the WTDD Radio Interface.

In Chapter 3, we present the fundamental concepts of the WCDMA-TDD technology, as implemented in the standard.

Chapters 4 and 5 are devoted to detailed presentations of the Radio Interface and Radio Procedures as defined in the 3GPP standards.

In contrast, Chapters 6 and 7 are devoted to implementation technologies of the Receiver and Network Optimization (i.e. Radio Resource Management).

We present various deployment scenarios and solutions in Chapter 8. Finally, we conclude the book with Chapter 9, which briefly describes WLAN and TD-SCDMA Radio Interface Technologies and compares them with WTDD Radio Interface.

2

System Architecture and Services

In this chapter, we shall describe the main aspects of the UMTS System, including the TDD Radio Interface.

2.1 UMTS SYSTEM ARCHITECTURE

Figure 2.1 shows a simplified UMTS architecture with its network elements and interfaces. It consists of a Core Network (CN) and a Radio Access Network (RAN), which in turn consists of the Radio Interface (Uu) and the UMTS Terrestrial Radio Access Network (UTRAN). As the name indicates, the RAN deals primarily with user access and radio resource related issues, whereas the Core Network forms the backend network and deals with services. For instance, the Radio Access Network is defined in terms of different Radio Access Technologies, as exemplified by different Radio Interfaces (FDD, TDD etc). On the other hand, the Core Network contains user related databases, and provides services such as Call and Mobility Management, Short Message Service, Location Based Services and IP-based Multimedia Services. This fundamental separation between the access networks and the backend service networks allows their independent evolution.

2.1.1 CN Architecture

Shown below is the CN architecture for 3GPP Release 99 (R99) [3]. The 3G CN is split into Circuit Switched (CS) and Packet Switched (PS) domains. Accordingly, the UTRAN interface is logically separated into the Iu-CS and Iu-PS interfaces, which connect into the CS and PS domains respectively. The CN can also interface with 2G radio access networks (referred to as Base Station Subsystems). In the 2G case, the A interface and the Gb interface support the CS and PS domains respectively. The Core Network architecture and functionality is independent of the Radio Access Technology (i.e. TDD or FDD).

Circuit switched traffic is handled by the MSC (Mobile Switching Center) and GMSC (Gateway MSC), whereas packet switched traffic is handled by the SGSN (Serving GPRS Support Node) and GGSN (Gateway GPRS Support Node). The circuit traffic feeds into the PSTN or other PLMN networks, whereas the packet traffic feeds into Public Data

Wideband TDD: WCDMA for the Unpaired Spectrum P.R. Chitrapu
© 2004 John Wiley & Sons, Ltd ISBN: 0-470-86104-5

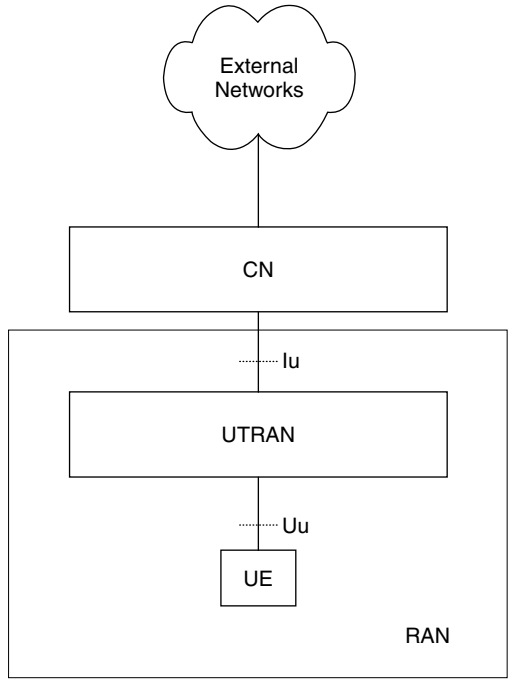

CN	Core Network
RAN	(UMTS) Radio Access Network
UTRAN	UMTS Terrestrial Radio Access Network
UE	User Equipment

Figure 2.1 UMTS Architecture

Networks such as the IP-based Internet. The packet traffic generally originates as TCP/IP based data.

The SGSN and MSC may be connected to additional SGSNs and MSCs as shown. The HLR (Home Location Register) is the main database containing subscriber related information. It is connected to the AuC (Authentication Center) which authenticates users for access to UMTS network services. The VLR (Visitor Location Register), typically collocated with the MSC, contains information on the local users within an MSC serving area (including roaming users that are homed on other PLMN networks). The CS and PS domains are connected via a number of interfaces for the purposes of signaling. This allows coordination of CS and PS services. For example, an incoming CS call may involve paging via the PS domain. The 3G CN can also handle interfacing with 2G/2.5G access networks. In this case, the CS data is transported over the A interface and the PS data on the Gb interface.

In 3GPP Release 4 [4], the signaling and traffic handling functions of the MSC were separated into two functional entities, termed as MSC Server and CS-MGW (CS – Media Gateway) respectively. The CS-MGW supports the traffic carrying bearers, whereas the MSC Server handles the Call Control and Mobility Control functions. Additionally, the MSC Server controls the establishment, maintenance and release of the traffic carrying

bearers in the CS-MGW. The figure below shows these elements, including new interfaces arising due to the addition of these elements.

2.1.2 UTRAN Architecture

The UTRAN architecture is shown in the figure below (Figure 2–4). The UTRAN consists of a set of Radio Network Subsystems (RNSs) connected to the Core Network through the Iu interface. An RNS consists of a Radio Network Controller (RNC) and one or more Node Bs.

The RNC is responsible for the flow of data and control messages (e.g. voice call, packet data, short message service, call control, etc.) between the CN and the user (i.e. the UE) over the radio interface (also called the air interface).

To achieve the flow between the CN and the UE, the RNC controls the decisions associated with allocating radio interface resources to users (such as Radio Resource allocation and Handover decisions). The RNC also controls communication between the RNS and the UE such as broadcast, paging, and resource allocation messages.

The actual radio transmitter and receiver functions of the radio interface are controlled by the Node B. The RNC must request resources from a Node B to ensure they are available and inform the Node B when to release resources. The Node B will initiate/terminate data flow over designated resources in accordance with the instructions from the RNC. A Node B is connected to the RNC through the Iub interface.

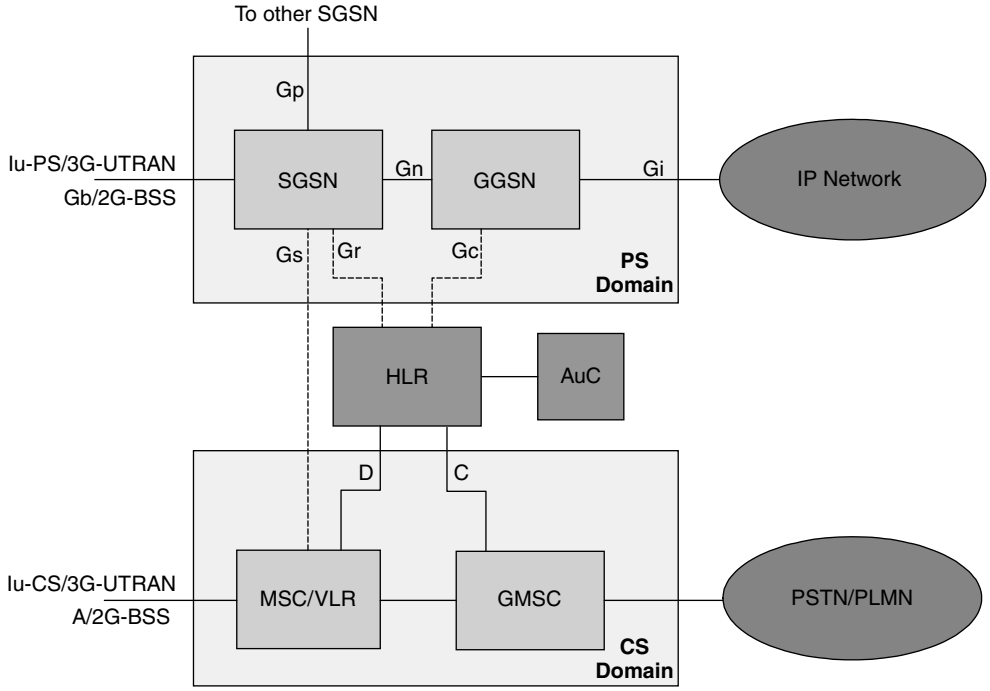

Figure 2.2 Core Network (CN) Architecture for Release 99

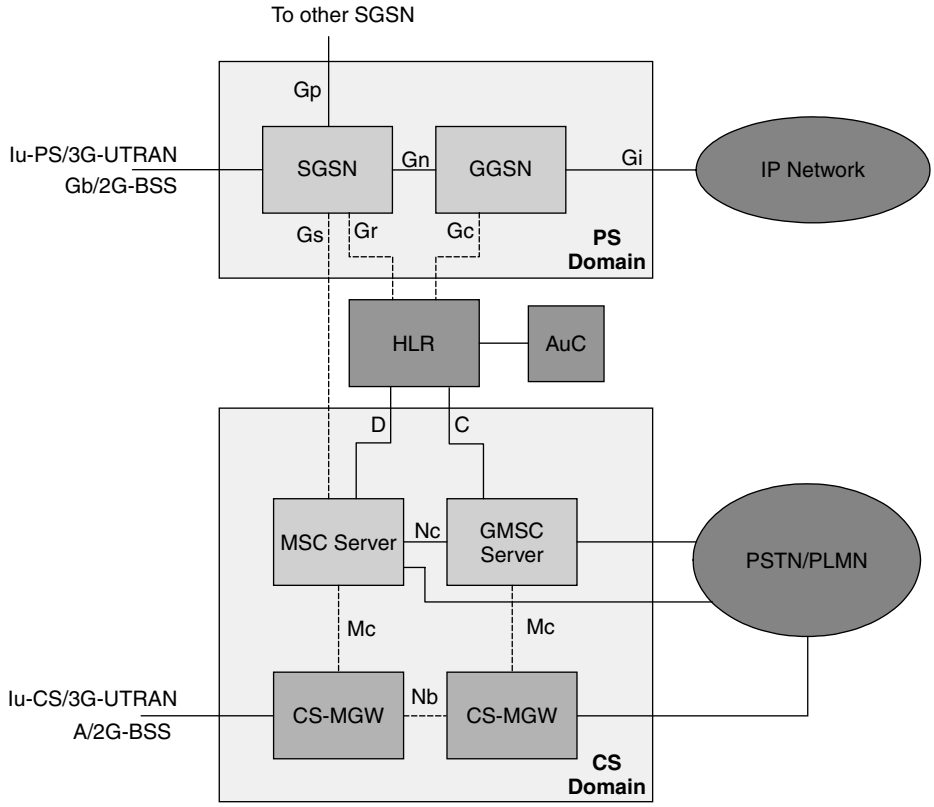

Figure 2.3 CN Architecture for 3GPP Release 4

In general, a Node B can support FDD radio interface, TDD radio interface or both. Each Node B can control the radio transmitter and receiver functions for one or more cells, where a cell is defined by a radio transmitter and receiver, providing radio access services over a coverage area, using one or more carrier frequencies. The physical entity which includes the transmitter and receiver functions for one cell is depicted as an ellipse in the figure. This physical entity is sometimes referred to as a base station (BS)[1]. If a Node-B consists of a single BS, the terms Node-B and BS may be used interchangeably.

In a UTRAN system with multiple RNSs, the RNCs of the different RNSs can communicate with each other through the Iur Interface. The Iur Interface is used to enable users to handover from the cells of a Node B in one RNS to the cells of a Node B in another RNS.

The RNS that provides the user with its interface to the CN is known as its Serving RNS (SRNS). The function in the RNC of the SRNS which provides the user with this interface is known as the Serving RNC (SRNC).

[1] This is consistent with the 3GPP standards relating to radio performance.

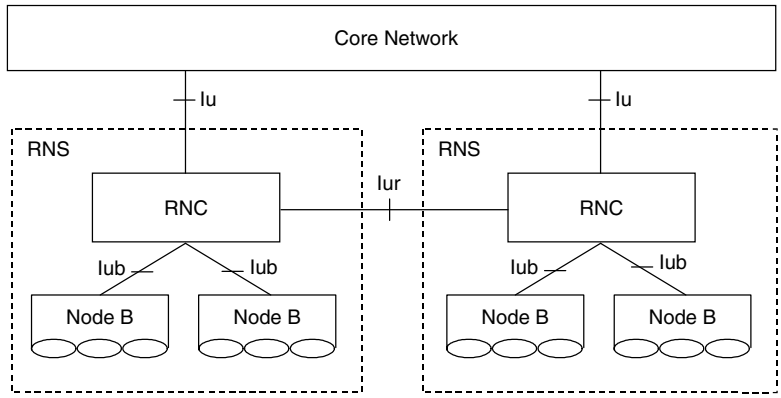

Figure 2.4 UTRAN Architecture

The RNC in each RNS also includes one or more Controlling RNC (CRNC) functions. The CRNC function controls the radio resource allocation in the Node B. There is a separate CRNC function controlling the resources for each cell.

Each UE communicates with one SRNC function and one CRNC function. The Figure 2.5 depicts the case in which the resources assigned to a user are controlled by a Node B in its SRNS. In this case, its CRNC function and its SRNC function are in the same RNS.

When a handover occurs that results in resources being assigned to a user in a different RNS than its SRNS, the RNS controlling the resources is known as the Drift RNS (DRNS) for the user. The function in the RNC of the DRNS providing the interface over the Iur between the SRNS and the DRNS for this user is known as its Drift RNC (DRNC). Since the resources for this user are now provided by the DRNS, the CRNC function for this user is in the RNC in the DRNS. This is depicted in the Figure 2.6.

Both during and after handover to another RNS, it is possible to switch the connection to the CN to the new RNS using an SRNS relocation procedure.

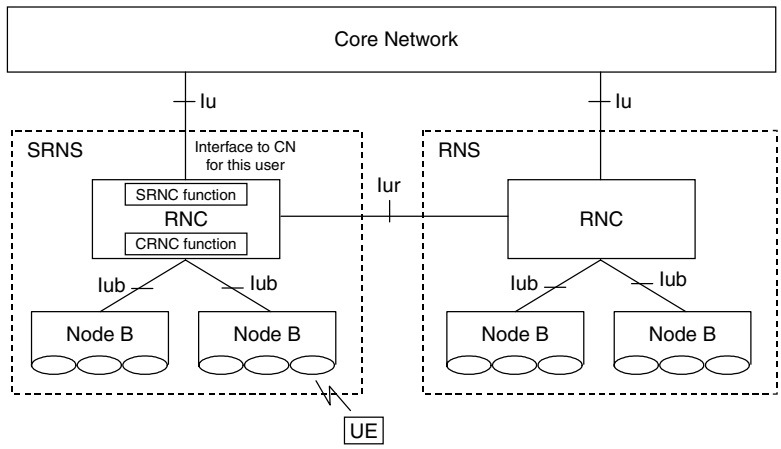

Figure 2.5 One RNS Providing CN Interface and Node B Resources to a Given UE

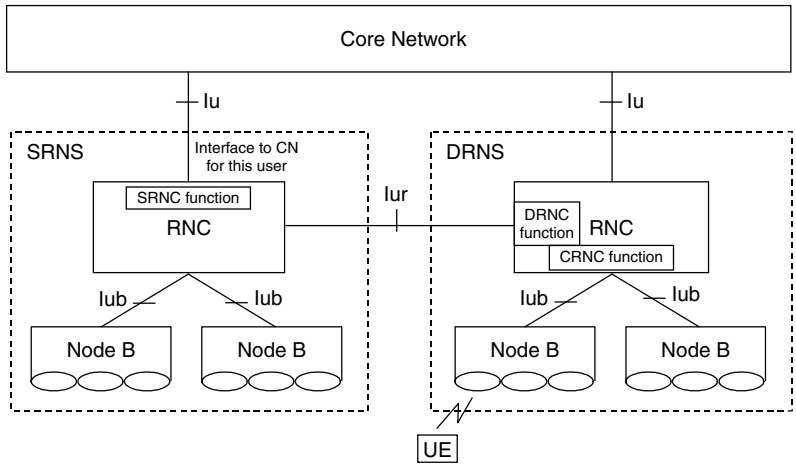

Figure 2.6 Use of Drift RNS When Different RNSs Provide CN Interface and Node B Resources to a Given UE

2.1.3 Radio Interface

UMTS supports FDD (Frequency Division Duplex) and TDD (Time Division Duplex) Radio Interfaces. As the name indicates, the FDD Radio Interface uses different spectrum blocks for Uplink and Downlink. In contrast, the TDD Radio Interface uses different time-slots in the same spectrum block for Uplink and Downlink. Both FDD and TDD use WCDMA for modulation and multiple access, with a chip rate of 3.84 Mcps and a nominal radio bandwidth of 5 MHz. During the course of the standards, a lower chip rate version of TDD was developed at 1.28 Mcps. This variant of TDD is referred to as LCR-TDD (Low Chip Rate TDD) or Narrowband-TDD or TD-SCDMA, in contrast to the HCR-TDD (High Chip Rate TDD) or Wideband-TDD. (The name TD-SCDMA stands for Time Domain – Synchronous CDMA, reflecting the fact that this standard also requires explicit Uplink Synchronization).

There are many intrinsic advantages of the TDD Radio Interface. For example, the number of timeslots for Uplink and Downlink can be dynamically changed to suit the needs of the traffic. Thus it is ideally suited to support asymmetric data traffic, which is typically greater in the Downlink than in the Uplink.

Another advantage is that the Uplink and Downlink radio channel characteristics are very similar, as the same spectrum is used, making it a ‘reciprocal channel’. This allows radio measurements, such as pathloss, made in one link direction to be usable for the other link direction.

2.2 PROTOCOL ARCHITECTURE

Complex communication systems such as UMTS are necessarily described in terms of OSI Protocol Layers. In this section, we shall provide a brief description of the layered description of UMTS.

2.2.1 UMTS Protocol Layers

The UMTS protocols operational between the UE, UTRAN and Core Network can be classified into two horizontal layers: Access Stratum (AS) and Non Access Stratum (NAS). The Figure 2.7 illustrates the layering.

The Access Stratum itself consists of two back-to-back sets of protocols:

- The radio protocols, which are used to manage the radio connections and radio resources between the UE and UTRAN. These include Radio Resource Control (RRC), Packet Data Convergence Protocol (PDCP), Radio Link Control (RLC),Medium Access Control (MAC) and the Physical Radio Layer (FDD/TDD).
- The Iu protocols, which manage the interface between the RNC and CN, as well as "radio access bearers" operational between the UE and CN.

The Non Access Stratum protocols (NAS) operate between the UE and Core Network. The NAS manages functions such as Call Control, Mobility Management, Short Message Service, Supplementary Services and Session Management procedures for packet switched services. In the Core Network, the protocols related to circuit switched services terminate at the MSC, whereas packet NAS protocols terminate at the SGSN. NAS information between the UE and CN is transported as transparent data by the Access Stratum, over the Uu, Iub and Iu interfaces.

Following OSI terminology, these protocols fall into Layer-1 , 2 and 3 of the OSI protocol stack. Layer-1 includes the Radio Interface (e.g. FDD, TDD) protocols, and the physical layer protocols over the terrestrial interfaces (e.g. Iub, Iu). Examples of the Layer-2 protocols are Medium Access Control (MAC) and Radio Link Control (RLC). Similarly, some of the main Layer-3 protocols are Radio Resource Control (RRC), Mobility Management (MM) and Call Control (CC). Among the Layer-3 protocols, RRC belongs to the Access Stratum, whereas MM & CC belong to the Non Access Stratum. Above these protocols ride higher layer protocols, such as IP, which are not UMTS specific.

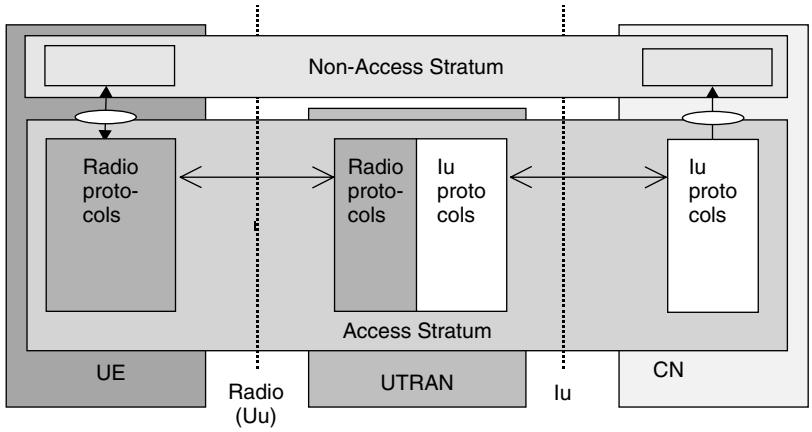

Figure 2.7 UMTS Protocol Layers

2.2.2 Protocol Models for UTRAN Interfaces

The general protocol model for UTRAN interfaces (Iu, Iub and Iur) is depicted in the Figure 2.8. The structure is based on the principle that the layers and planes are logically independent of each other, and if required, certain protocol entities may be changed while others remain intact.

The protocol structure of the UTRAN can be described in terms of two layers, namely the Transport Network Layer (TNL) and the Radio Network Layer (RNL). The RNL handles all UTRAN related issues. The TNL represents standard transport technology used to carry the RNL protocol information between nodes.

Since each of these layers enables the exchange of traffic as well as signaling data, it is convenient to split each layer into User Plane and Control Plane. User Plane protocol functions implement the bearer service of carrying user data. Control Plane protocol functions control the radio access bearers and the connection between the UE and the network.

The User Plane and Control Plane data of the RNL are transported as User Plane Data by the TNL. The TNL has its own Control Plane data, which is exchanged between peer entities.

The User Plane and Control Plane protocols of the RNL of the UTRAN are referred to as Frame Protocols and Application Part protocols respectively. The RNL Control Plane protocols are Node-B Application Protocol (NBAP) for the Iub Interface, RAN Application Protocol (RANAP) for the Iu Interface, and RNS Application Protocol (RNSAP) for the Iur Interface.

The Transport Network Layer in Release 99 and Release 4 is based on the ATM standard (ITU-T Recommendation I.361). Two ATM adaptation layers are primarily used: AAL2 (ITU-T Recommendation I.363.2) and AAL5 (ITU-T Recommendation I.363.5).

The TNL Control Plane includes the ALCAP protocols that are needed to set up the transport bearers (Data Bearers) for the TNL User Plane. It also includes the appropriate

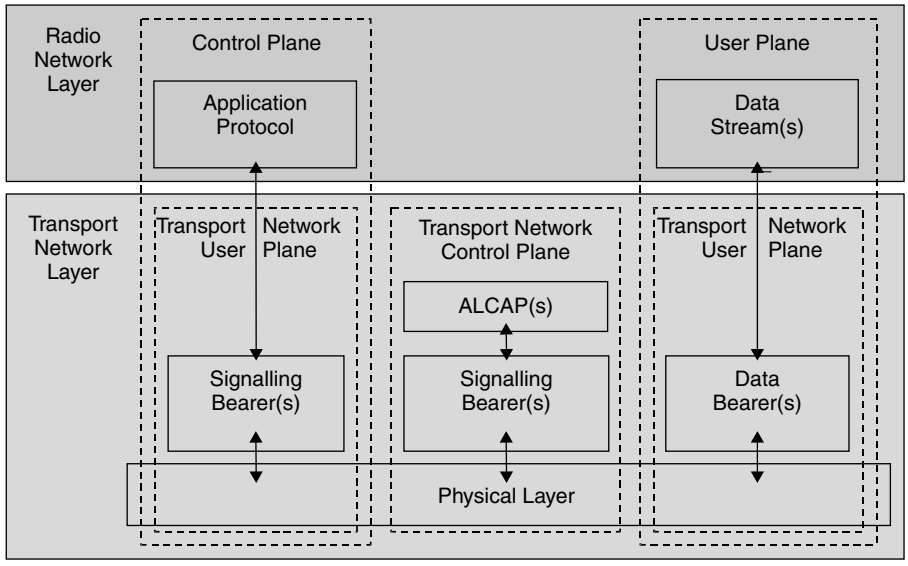

Figure 2.8 General Protocol Model for UTRAN Interfaces

Signalling Bearers needed for the ALCAP protocols. ALCAP is the Access Link Control Application Part, which is the generic name for the transport signaling protocols used to set up and tear down transport bearers. The introduction of the TNL Control Plane makes it possible for the protocols in the RNL to be completely independent of the technology selected for the TNL.

Figures 2.9, 2.10 and 2.11 are the User Plane and Control Plane protocol architectures of the Iub, Iu-CS and Iu-PS interfaces respectively [3, 4].

The Iub RNL User Plane frame protocols "frame" the user plane data for the different transport channels for transfer between the Node B and the RNC. The framing is an encapsulation (in a structured format) to ensure proper routing and handling of the data. The frame protocols carry Access Stratum and Non Access Stratum protocol signaling, as well as PS/CS bearer data, to/from the UE. The RNL control plane protocol, NBAP, is used for communication between the RNC and the Node B for the purpose of setting up and releasing resources in the Node B as well as for passing status information between the RNC and the Node B.

The Iub TNL Control Plane consists of the ALCAP protocol (Q.2630.2) and adaptation layer Q.2150.2 for setting up AAL2 bearer connections. The TNL User Plane uses AAL2, over ATM, as transport technology.

The Iu Interface protocol structures for CS data and PS data are shown separately. For both protocol structures, the RNL User Plane frame protocol is Iu-UP and the RNL Control Plane protocol is RANAP. Iu-UP frames the user plane data for transfer between the RNC and the CN. RANAP is used for communication between the RNC and the CN for service requests, radio access bearer management, and management of the Iu interface.

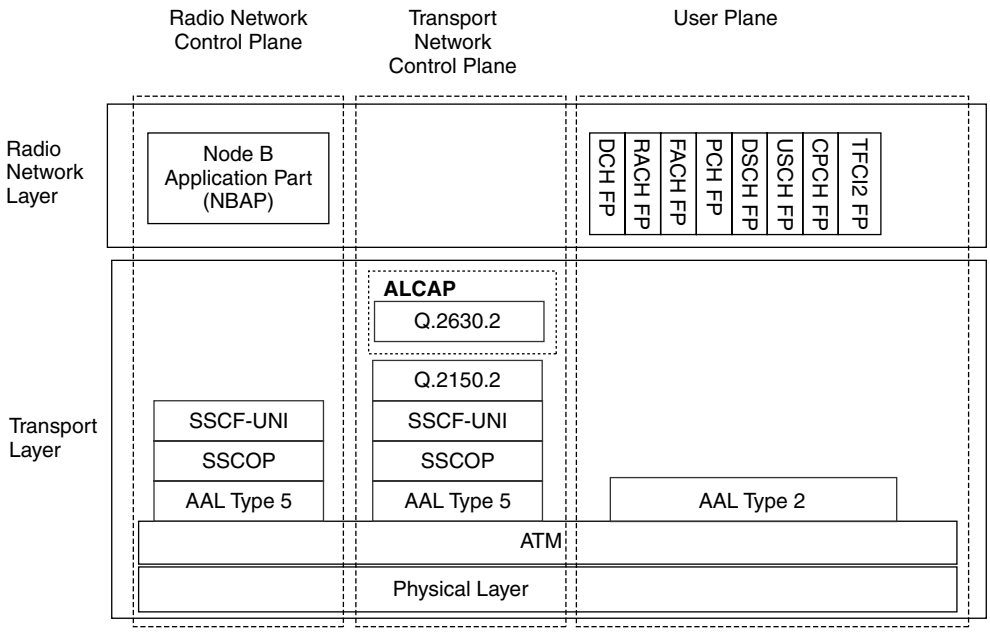

Figure 2.9 Iub Interface Protocol Structure

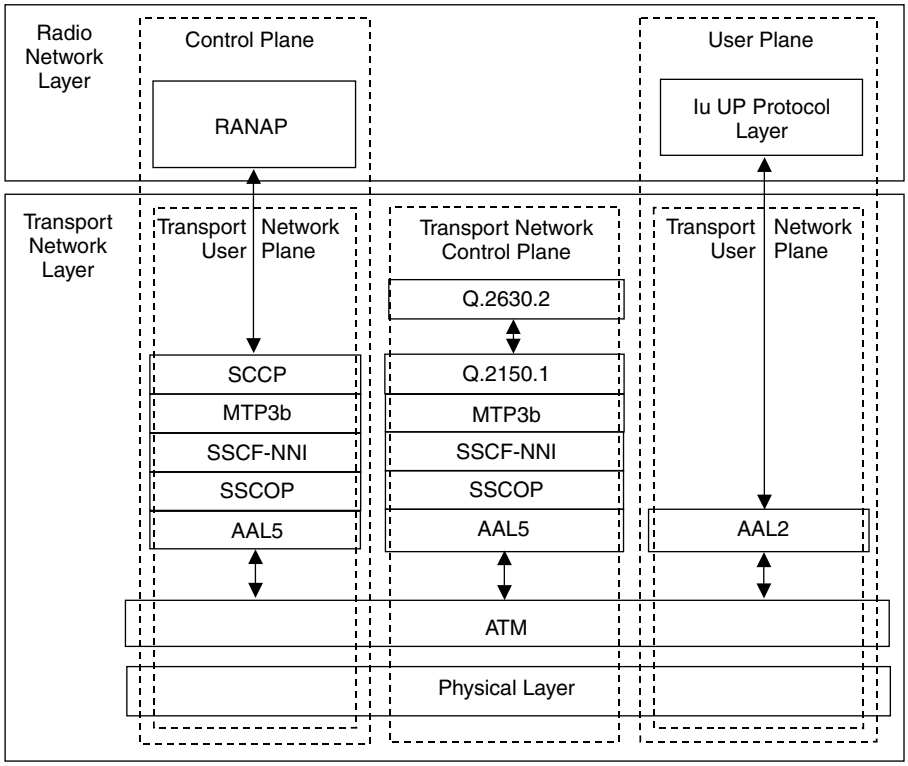

Figure 2.10 Iu-CS Interface Protocol Structure

The Iu-CS TNL Control Plane consists of the ALCAP protocol (Q.2630.2) and adaptation layer Q.2150.1 for setting up AAL2 bearer connections. These operate on top of of SS7 protocols. The TNL User Plane uses an AAL2 connection for each CS service.

The Iu-PS TNL User Plane uses GTP-U (User Plane part of the GPRS Tunneling Protocol) to carry PS data over the Iu interface. No TNL Control Plane is employed for the PS domain, as the information exchanged between the RNC and SGSN for establishment of GTP tunnels is carried in RANAP messages.

The Iu-PS RNL Control Plane uses RANAP, running over SS7 or IP-based protocols.

The Iur Interface protocol structure, not shown, includes the user plane frame protocols to frame the user plane data for the different transport channels for transfer between two RNCs. The RNL control plane protocol is the RNSAP. This is used for the transfer of resource requests, replies, measurements and status between the two RNCs. Similar to the Iub and Iu interfaces, the TNL Control Plane includes the ALCAP protocols that are needed to set up the transport bearers for the TNL User Plane and the appropriate Signalling Bearers needed for the ALCAP protocols.

A detailed discussion of the UMTS protocols can be found in [Chapter 9, 2]. Details of UTRAN terrestrial interface protocols can be found in [Chapter 5, 1].

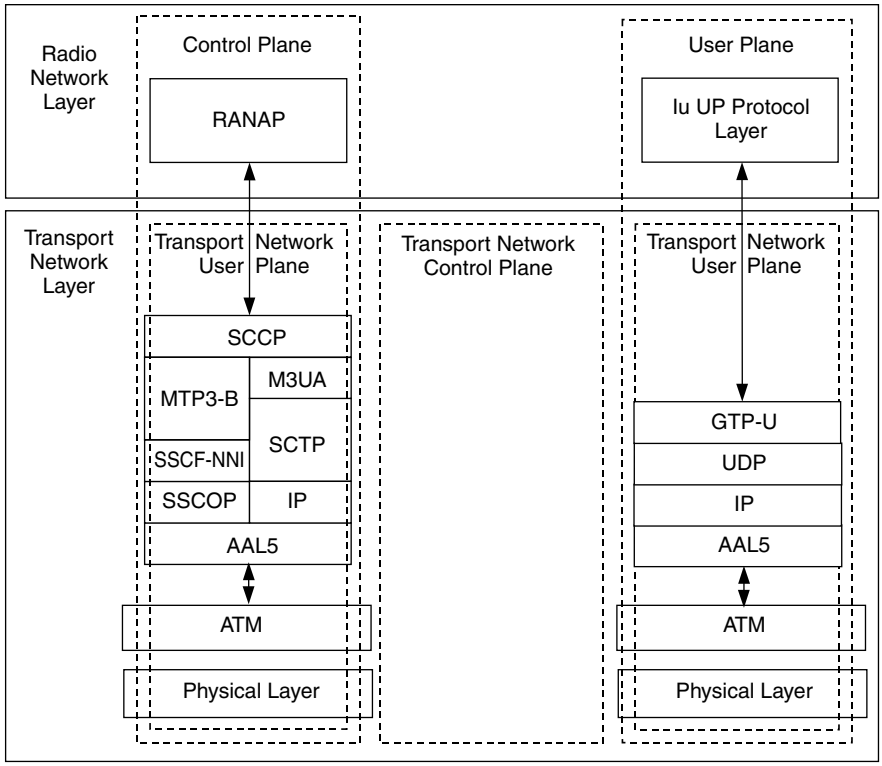

Figure 2.11 Iu-PS Interface Protocol Structure

2.3 UMTS SERVICES

No system level discussion of UMTS is complete without a reference to the handling of services. As described in the earlier sections, the Core Network provides the platform for the delivery of UMTS services to the user. Circuit switched services (call control, supplementary services, etc.) are delivered by the MSC. The SGSN/GGSN elements deliver packet oriented services. UMTS differentiates its handling of services from that of second-generation radio interfaces, by providing the following capabilities:

- Higher bit rates
- Variable bit rate services
- Multiplexing of services, with differing quality requirements, on a given connection
- Support of a wide range of quality requirements, based on criteria such as bit rate, delay, delay variation, error rate, packet size, etc.
- Support of asymmetric uplink and downlink traffic (with TDD only)
- Negotiation of radio bearer characteristics by a user or application
- Support of multiple quality of service (QoS) classes that applications can be mapped to.

The TDD flavor of WCDMA is especially efficient for the support of data services. The inherent time-slotted nature of TDD makes its support of asymmetric data applications

efficient. Several of the commonly used data applications are asymmetric in nature, and TDD, with its ability to adjust the uplink/downlink bandwidth switching point flexibly, provides a spectrally efficient solution at low cost to the operator.

2.3.1 Traffic Classes and Quality of Service

In UMTS, applications are mapped onto one of four Traffic or QoS Classes: Conversational, Streaming, Interactive and Background classes. In this book, we shall also refer to the first two classes of service as Real Time (RT), and the last two as Non-Real Time (NRT).

These traffic classes differentiate themselves from one another based primarily on delay sensitivity and bit error rate (BER) requirements, key elements of quality of service. For example, Conversational traffic is highly delay sensitive, while Background traffic is more delay tolerant.

The Figure 2.12 shows a possible mapping of various applications to Traffic Classes.

2.3.1.1 Traffic Classes

The Conversational class includes applications with real-time, 2-way communication processes, such as telephony speech, VoIP, and video conferencing. Typically, the communication process is carried between peer end-users (humans). With this type of traffic, the time relation between the information entities and conversational pattern must be preserved. Accordingly, this class has the tightest delay and delay variation requirements. Error rates may be relatively high, compared to Background or Interactive traffic.

The Streaming class includes real-time, 1-way communication processes, such as an audio or video stream delivered to a human user. Here, the data needs to be delivered as a steady and continuous stream. Hence, the time relation between information entities (samples, packets) has to be preserved. Although the delay need not be small, delay variations must be minimal.

The Interactive class includes the request-response type of 2-way communication processes between machines and humans, such as Web browsing, database retrieval, server

	Conversational (delay <<1 sec)	Interactive (delay approx.1 sec)	Streaming (delay <10 sec)	Background (delay >10 sec)
Error tolerant	Conversational voice and video	Voice messaging	Streaming audio and video	Fax
Error intolerant	Interactive games	E-commerce, WWW browsing, FTP	Still image, paging	E-mail arrival notification

Figure 2.12 Example Mapping of Applications to Traffic Classes

access etc. The delay requirements here are rather elastic, and are only governed by the expectations of the end-user of a response time. However, the payload contents must be transferred with low or zero BER (something that is facilitated by forward or backward error correction procedures).

The Background class includes transactions, such as delivery of E-mail, SMS, and other machine-machine transactions. Here, the destination is not expecting the data within a certain time frame, so delay is tolerated. However, payload contents must be preserved, so BER requirements tend to be stringent.

2.3.1.2 Quality of Service

Although user satisfaction with a service is somewhat subjective, measurable attributes can be used to quantify the "Quality of Service" (QoS) the user can expect. These attributes ultimately result in user perceived delays (voice delay, download time, etc.) and errors (clicks, drops, fades, etc.).

Before looking at specific QoS attributes, it is important to note that the UTRAN is only one point of the overall architecture for user to network (e.g. PSTN, PDN) and user to user communication. Many nodes play a part in the QoS of a service. The figure below (Figure 2.13) [5] depicts the overall QoS architecture and all the components which influence the end-to-end QoS. It illustrates the layered architecture of a UMTS bearer service. Each bearer service, at a specific level, provides services using those provided by the underlying bearer service layers.

In actual operation, every user session (e.g. speech call, data session, etc.) is mapped onto a traffic class appropriate to its requirements. At the top level, an End-to-End Service is established between the UMTS UE and the remote (destination) TE. As the corresponding session is established within the UMTS network, a UMTS Bearer Service is

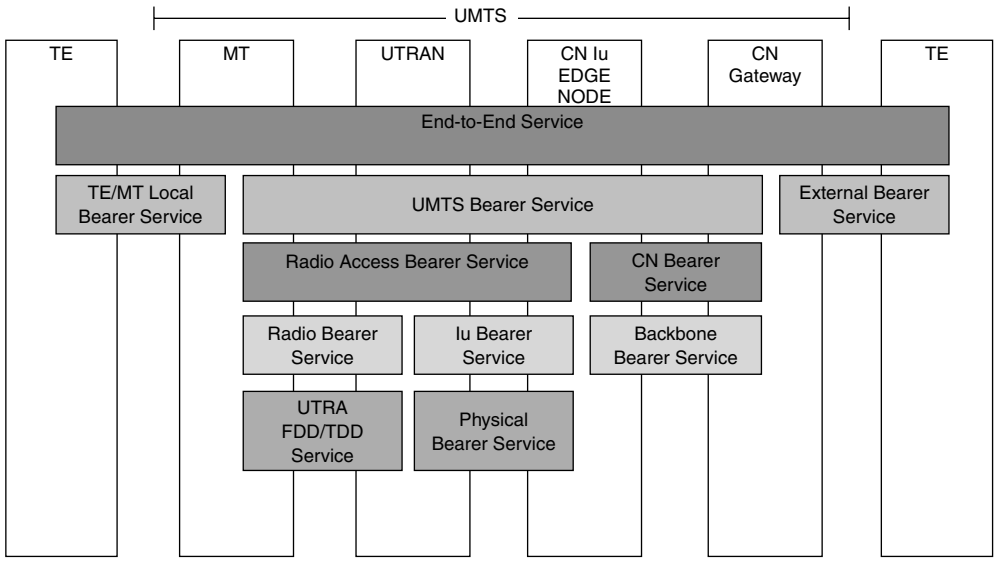

Figure 2.13 QoS Architecture

established between the MT and the CN. The UMTS Bearer Service represents end-to-end QoS between the MT and CN.

The UMTS Bearer Service attributes are then translated into the QoS attributes of the underlying Radio Access Bearer Service and Core Network Bearer Service, which are the transport related services provided by RAN and CN respectively. The Radio Access Bearer QoS attributes further decompose into the QoS attributes of the Radio Bearer Service (covering the radio interface) and the Iu Bearer Service (covering the Iu interface). Finally, these are implemented in terms of the physical radio channel and physical Iu interface channels.

Effectively, resources (radio and/or terrestrial) are allocated to each one of the underlying bearer service levels. This enables a given bearer service to meet the quality requirements allocated to it. At a higher level, the UMTS Bearer Service aggregates all these underlying services to provide end-to-end QoS for the session as a whole. The UMTS NAS and Access Stratum signaling protocols facilitate the negotiation of QoS parameters, and the communication of resource allocations, between the MT, Node B and RNC.

2.3.2 UMTS QoS Attributes

QoS for each of the UMTS Traffic classes is specified in terms of a number of attributes, some of which are listed below:

- Data Rate attributes: maximum and guaranteed bit rates
- 'Packet' attributes: SDU (Service Data Unit) size, format
- Error Rate attributes: bit and SDU error rates
- Priority attributes: traffic handling, allocation, retention priorities
- Delay attributes: maximum transfer delay
- Delivery attributes: in or out of sequence delivery, delivery of erroneous SDUs

The values of the QoS attributes depend upon the service class that the application belongs to. The table below Table (2.1) provides the ranges of values of the attributes of the UMTS Bearer Service [7].

Table 2.1 Value Ranges of UMTS Bearer Service Attributes

Traffic class	Conversational class	Streaming class	Interactive class	Background class
Maximum bitrate (kbps)	≤2048	≤2048	≤2048-overhead	≤2048-overhead
Delivery order	Yes/No	Yes/No	Yes/No	Yes/No
Maximum SDU size (octets)	≤1500	≤1500	≤1500	≤1500
Delivery of erroneous SDUs	Yes/No	Yes/No	Yes/No	Yes/No

Table 2.1 (*continued*)

Traffic class	Conversational class	Streaming class	Interactive class	Background class
Residual BER	$5*10^{-2}$, 10^{-2}, $5*10^{-3}$, 10^{-3}, 10^{-4}, 10^{-5}, 10^{-6}	$5*10^{-2}$, 10^{-2}, $5*10^{-3}$, 10^{-3}, 10^{-4}, 10^{-5}, 10^{-6}	$4*10^{-3}$, 10^{-5}, $6*10^{-8}$	$4*10^{-3}$, 10^{-5}, $6*10^{-8}$
SDU error ratio	10^{-2}, $7*10^{-3}$, 10^{-3}, 10^{-4}, 10^{-5}	10^{-1}, 10^{-2}, $7*10^{-3}$, 10^{-3}, 10^{-4}, 10^{-5}	10^{-3}, 10^{-4}, 10^{-6}	10^{-3}, 10^{-4}, 10^{-6}
Transfer delay (ms)	100 – maximum value	280 – maximum value		
Guaranteed bit rate (kbps)	$\leq$2048	$\leq$2048		
Traffic handling priority			1,2,3	
Allocation/ Retention priority	1,2,3	1,2,3	1,2,3	1,2,3

REFERENCES

[1] Holma, H., A. Toskala, "*WCDMA for UMTS*", John Wiley, 2nd Edition, 2001.
[2] Kaaranen, H., *et al*, "*UMTS Networks*", John Wiley, 2001.
[3] 3GPP, TSG Services and System Group, "3G TS 23.002 v3.6.0 Network Architecture", 2002–09.
[4] 3GPP, TSG Services and System Group, "3G TS 23.002 v4.8.0 Network Architecture", 2003–06.
[5] 3GPP, TSG Services and System Group, "3G TS 23.107 v4.6.0 Quality of Service (QoS) Concept and Architecture (Release 4)", 2002–12.

3

Fundamentals of TDD-WCDMA

TDD-WCDMA is a radio interface technology that combines Code Division Multiple Access (CDMA) and Time Division Multiple Access (TDMA), as well as Time Division Duplexing (TDD).

The user data bits are converted to a sequence of chips, at a rate of 3.84 Mcps, which occupies approximately 5 MHz bandwidth. The chips are obtained by a direct-sequence spreading operation, using a code referred to as a spreading code or a channelization code. By assigning different codes to multiple users, Code Division Multiple Access is realized. It is referred to as WCDMA because the bandwidth is wider than the previous generation CDMA systems (e.g. IS-95, the bandwidth of which was 1.25 MHz).

In order to realize TDMA, time is segmented into Radio Frames of 10 ms duration and each Radio Frame is further split into 15 timeslots. Each timeslot can carry one of several types of radio bursts, which contain the spread/chipped user data. By assigning timeslots to multiple users, TDMA is realized.

Finally, Time Division Duplexing is achieved by assigning some timeslots for uplink and others for downlink transmissions. Thus, a single band of 5 MHz can support bi-directional communication and support multiple users.

3.1 TDD ASPECTS

Figure 3.1 shows time segmented into 10 ms Radio Frames, and 15 timeslots per radio frame. Frames are numbered by the so-called System Frame Number (SFN), which is a 12-bit number (range = 0 to 4095). It is specific to and maintained by the cell.

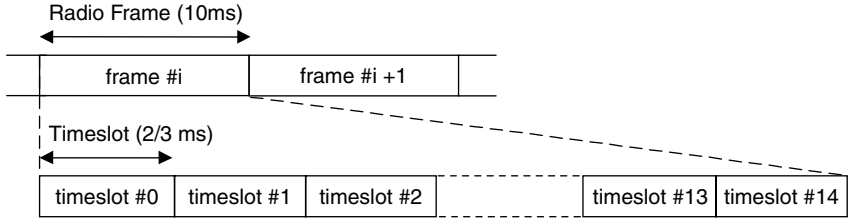

Figure 3.1 TDMA Aspects: Frames and Timeslots

Wideband TDD: WCDMA for the Unpaired Spectrum P.R. Chitrapu
© 2004 John Wiley & Sons, Ltd ISBN: 0-470-86104-5

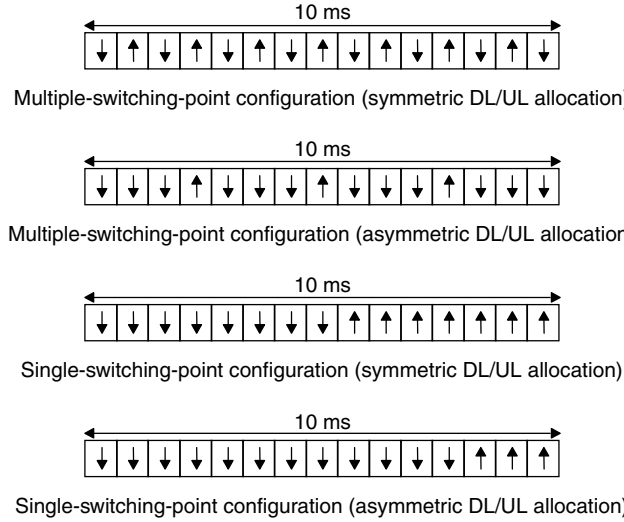

Figure 3.2 Flexible Duplexing in Time Domain

Duplex operation is achieved by allocating the timeslots to either uplink or downlink. This can be done in an arbitrary and flexible manner, as the examples in Figure 3.2 show. However, in any configuration, at least one timeslot has to be allocated for the downlink and at least one timeslot has to be allocated for the uplink. Clearly, this flexible allocation of timeslots makes the radio interface ideally suited for asymmetric data applications and to balance uplink and downlink coverage.

3.2 TDMA ASPECTS

Multiple Access in Time Domain is achieved by assigning different timeslots to different users. We shall now describe how each timeslot carries user data. Since the chip rate is 3.84 Mcps, each timeslot with a duration of 10/15 msec carries 2560 chips. Each chip is a complex valued symbol that can take any of 4 values ($\pm 1 \pm j$) thus carrying 2 bits of information. The 2560 chips are organized into three types of Data Bursts, as described below.

3.2.1 Data Burst Structure

Every Data Burst is partitioned into two data symbol fields, a midamble and a guard period. See Figure 3.3. The midamble serves as a training signal for estimating the radio channel characteristics, while the guard period minimizes the interference between radio bursts in adjacent timeslots and allows time for transition between transmit and receive modes. The interference between successive radio bursts may occur if they originate from different UEs, which have different propagation delays to the BS. The guard time also allows the so-called Timing Advance operation, whereby a UE advances its uplink burst transmission, so that the bursts arrive at the correct time at the Base Station after the propagation delay.

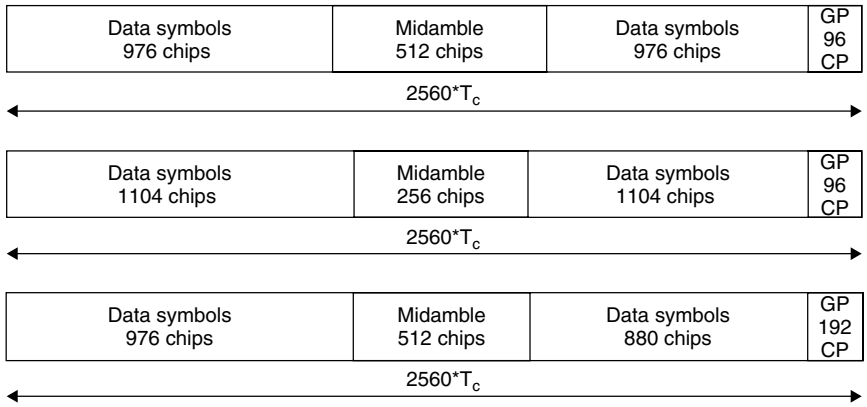

Figure 3.3 Radio Bursts: Top to Bottom = Type 1 to Type 3; GP = Guard Period; CP = Chip Period

The three different bursts are suited for different applications. Burst Types 1 and 2 are typically used for uplink and downlink data transfer. Burst Type 2 offers a longer data field than Burst Type 1 at the cost of a shorter midamble. Since the midamble is used to estimate the channel, a shorter midamble may reduce the estimation accuracy. Burst Type 3 is used for uplink only. Due to the longer guard period it is suitable for initial access or access to a new cell after handover. This is because the initial uplink burst transmissions cannot be synchronized at the Base Station via the Timing Advance operation and thus requires longer guard time to account for propagation delays. Although different bursts can be transmitted within a timeslot, some receiver implementations may put certain restrictions on the burst types that can be mixed.

The Data parts of the bursts can also carry signaling information. Specifically, the signaling information consists of the TPC bits (Transmit Power Control bits, either 0 or 2) and TFCI bits (Transport Format Combination Indicator bits, either 0, 4, 8, 16 or 32). The location of these bits is shown in Figure 3.4. Since these signaling bits are part of the data field, it follows that they are spread with the same spreading factor as the data bits, with the exception that in the uplink, a spreading factor of 16 is used for TFCI bits regardless of the spreading factor for data. TPC bits are transmitted at least once per frame in the uplink. The meaning and usage of the TPC and TFCI bits will be explained later in Chapter 4.

3.2.2 Midamble Generation

The midambles (also known as training sequences) are generated from a set of Basic Midamble Codes, specified in 3GPP TS 25.221, Annex A [7]. There are 128 'long' Basic Midamble Codes of length 456 bits for use in Bursts of Types 1 and 3 and 128 'short' Basic Midamble Codes of length 192 bits for use in Bursts of Type 2. The long and short Basic Midamble Codes are specific to a Cell. The midamble is generating by periodically extending the cell's Basic Midamble Code as follows: let the Basic Midamble Code vector be:

$$\mathbf{m}_{\mathrm{P}} = (m_1, m_2, \ldots, m_P) \qquad \mathrm{P} = 456 \text{ or } 192 \tag{3.1}$$

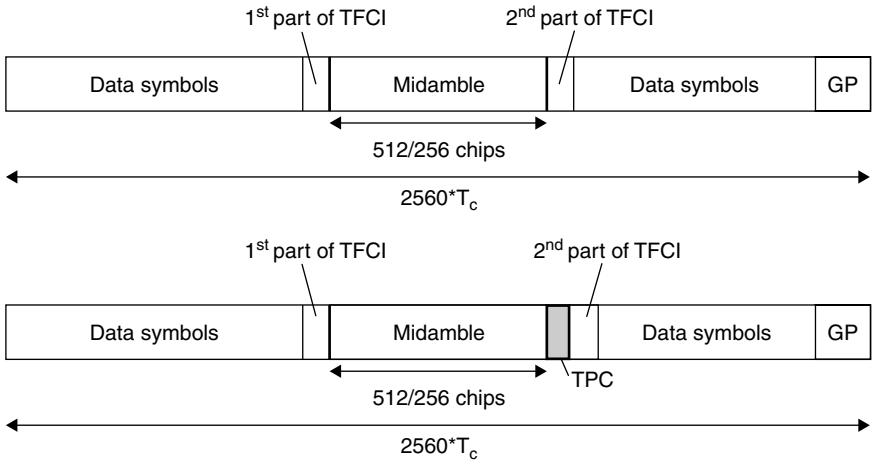

Figure 3.4 Location of TPC and TFCI Signaling Bits: Top = Downlink Burst; Bottom = Uplink Burst

where m_i is $+/-1$. Define Complex Midamble Code vector (corresponding to QPSK modulation) as:

$$\underline{\mathbf{m}}_{\mathrm{P}} = (\underline{m}_1, \underline{m}_2, \ldots, \underline{m}_P) \tag{3.2}$$

where:

$$\underline{m}_i = (\mathrm{j})^i \cdot m_i \text{ for } i = 1, \ldots, P \tag{3.3}$$

The actual midamble (training sequence) $\underline{\mathbf{m}}$ is derived by periodically extending the Complex Midamble Code vector of length P to the appropriate length L (512 or 256), see Figure 3.5.

Additional midambles $\underline{\mathbf{m}}^{(k)}$ $\mathrm{k} = 1, \ldots, \mathrm{K}$ may be generated by applying shifts to the periodic extension of the Complex Midamble Code $\underline{\mathbf{m}}_{\mathrm{P}}$. The scheme is illustrated in Figure 3.6.

The first K′ midambles are generated by shifts of multiples of W chips, whereas the second K′ midambles use an additional constant shift of S = P/K rounded to the lower integer.

The midambles generated as above may be used when a timeslot carries more than one user. They may also be used in contention-based common access radio channels (i.e. the Random Access Channel which will be introduced in Chapter 4).

The Network may allocate midambles to UEs in three different ways: (1) UE specific midamble allocation; (2) common midamble allocation; and (3) Default midamble allocation (based on a fixed relationship to the channelization code).

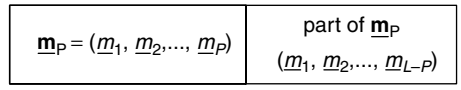

Figure 3.5 Midamble Generation by Periodic Extension of Complex Midamble Code

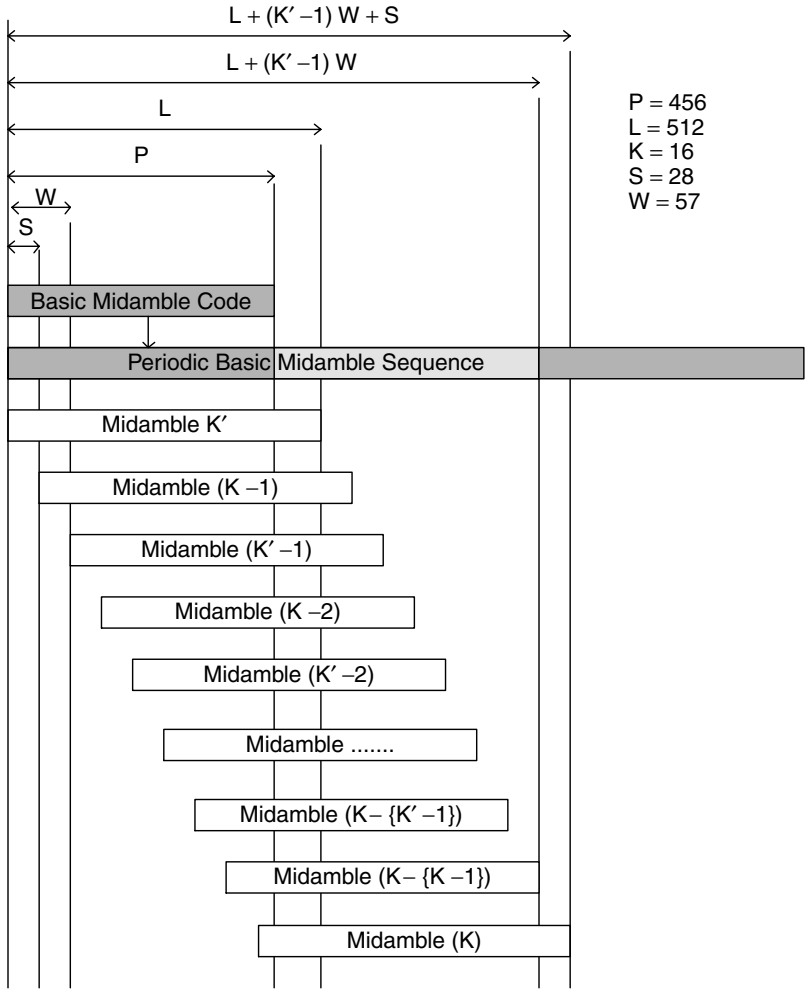

Figure 3.6 Generation of Multiple (K = 2K′) Midambles

3.2.3 Synchronization Bursts

Although the standards do not classify 'synchronization bursts', it is convenient here to describe radio bursts used for providing initial chip level and timeslot level synchronization to the UE, see [4, Section 7].

There are two types of synchronization bursts, called Primary Synchronization Burst and Secondary Synchronization Burst, each of which is of 256 chips duration. These bursts are situated within one or two timeslots (referred to as Beacon timeslots) per each frame, with a predetermined offset, see Figure 3.7.

C_p and C_s refer to the Primary and Secondary Synchronization Codes. The Primary Synchronization Code (PSC) is a complex valued sequence of 256 chips and unique for all cells. It is constructed as a generalized hierarchical Golay sequence, which has good

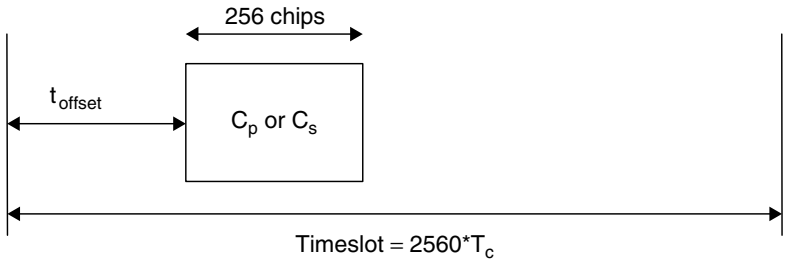

Figure 3.7 Synchronization Bursts

aperiodic auto-correlation properties. Synchronizing with the PSC achieves chip level synchronization between the UE and the Network.

There are 12 complex valued Secondary Synchronization Codes, which are generated from Hadamard sequences. The power of each SSC is 1/3 the power of the PSC. The SSCs are modulated by a signal, which is specific to each cell and uniquely determines the time offset shown in Figure 3.7. Thus, determination of the SSC modulation achieves timeslot synchronization.

The time-offset t_{offset} can take one of 32 possible values, given by:

$$t_{offset} = n \cdot 71T_c;\ n = 0, \ldots, 31, \text{ and } T_c = \text{chip duration.}$$

3.3 WCDMA ASPECTS

3.3.1 Spreading and Modulation

The basic principle of spreading is depicted in Figure 3.8, where a binary signal is spread by a factor of 8. The spread bits are referred to as chips.

In WTDD, the binary user data is first converted to 4-valued complex data symbols according to the QPSK modulation scheme, as shown below:

Data Bits	Complex Symbol
0 0	1
0 1	−1
1 0	j
1 1	−j

The complex data symbols are spread using a binary valued Spreading Code, whose length is variable with possible values 1, 2, 4, 8, 16 in the uplink and 1 or 16 in the downlink. The Spreading Codes are also called Channelization Codes, since they define distinct channels in the Code domain.

The Spreading/Channelization Codes are generated as shown in Figure 3.9 using a binary tree [4]. The codes are designated as C_Q^k, where Q (1, 2, 4, 8, 16 for uplink and 1, 16 for downlink) refers to the Spreading Factor and k ($1 \leq k \leq Q$) is the code index. The spreading codes are orthogonal for all values of k and Q, so that they are

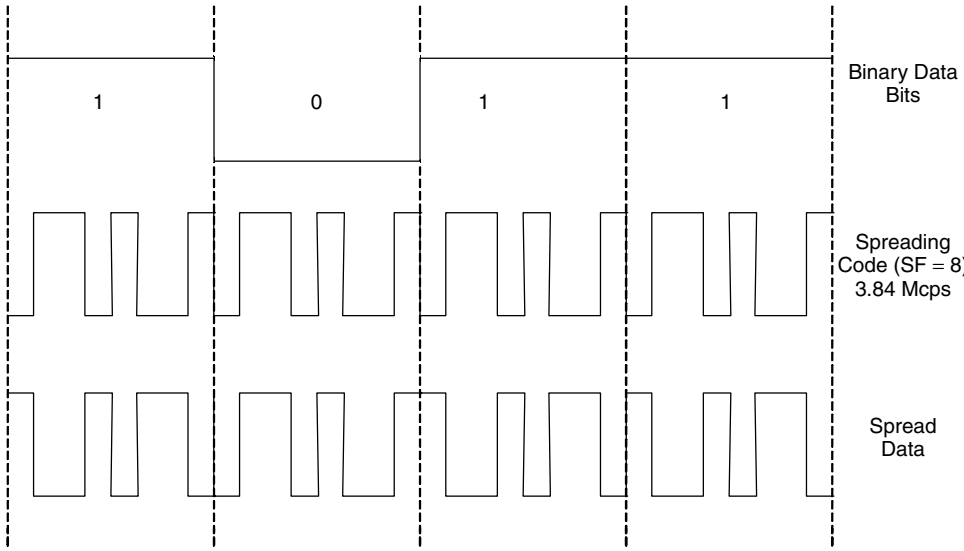

Figure 3.8 Basic Principle of Spreading

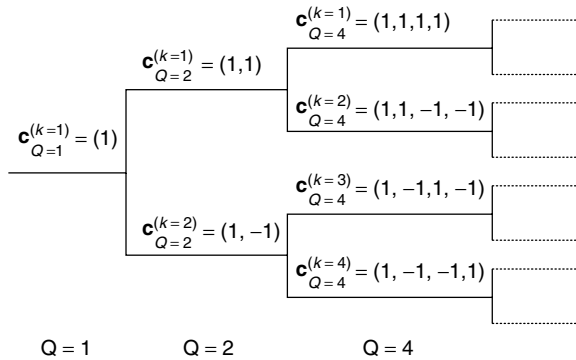

Figure 3.9 OVSF Spreading/Channelization Code Generation

called Orthogonal Variable Spreading Factor (OVSF) codes. The orthogonality allows data signals with different spreading codes to be overlapped in the same timeslot without causing mutual interference.

Note that the tree structure of the OVSF codes imposes certain restrictions for code assignment. When a Spreading Code is assigned with a Spreading Factor <16, then all the Spreading Codes in the subtree emanating from the assigned code are locked out and cannot be assigned to any other user. For example, if code (1,1) with SF = 2 is assigned, then all codes starting with (1,1,xxxx) are locked out. Only the code (1,−1) or codes in the subtree emanating from it can be assigned to other users.

The real valued spreading codes are multiplied by a complex sequence of $\{1, -1, j, -j\}$, effectively making the spreading sequence complex. The sequences have the same length as that of the Channelization Code and are called Code Specific Multipliers [4].

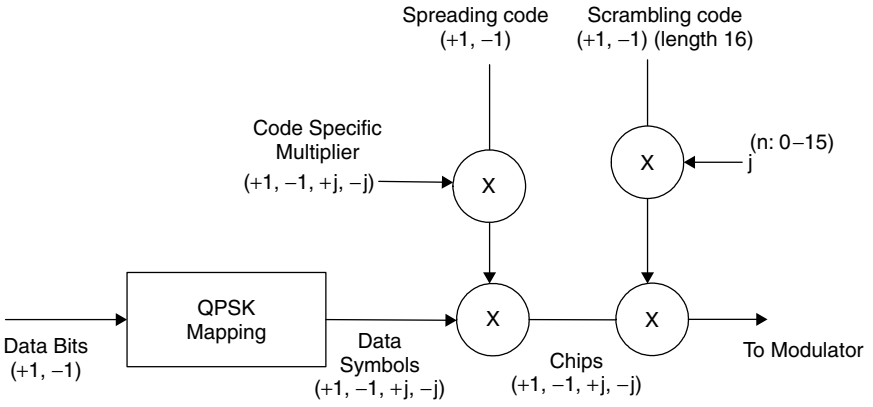

Figure 3.10 WCDMA Aspects: Spreading and Scrambling

The complex valued data symbols are spread by multiplying by the complex spreading code. Irrespective of the spreading factor, the rate after spreading is 3.84 Mcps, so that the data symbol rate equals 3.84/Q Msps.

The spread data symbols are finally scrambled by multiplying with a complex scrambling sequence, which is generated by multiplying a binary valued, 16-chip long sequence with a fixed complex sequence (j^n, $0 \leq n \leq 15$). The Scrambling Code occurs at the same rate as the Spread Data, so that the chip rate is not altered. The Scrambling Code is specific for a Cell and thus serves to provide isolation between signals from adjacent cells. There are 128 real valued codes specified in Annex A of [4].

Figure 3.10 shows the spreading and scrambling operation of the data.

3.4 MODEM TRANSMITTER

In this section, we shall review the salient features of a TDD-WCDMA Transmitter. The key functional blocks operating on a block of data, referred to as a Transport Block, are shown in Figure 3.11.

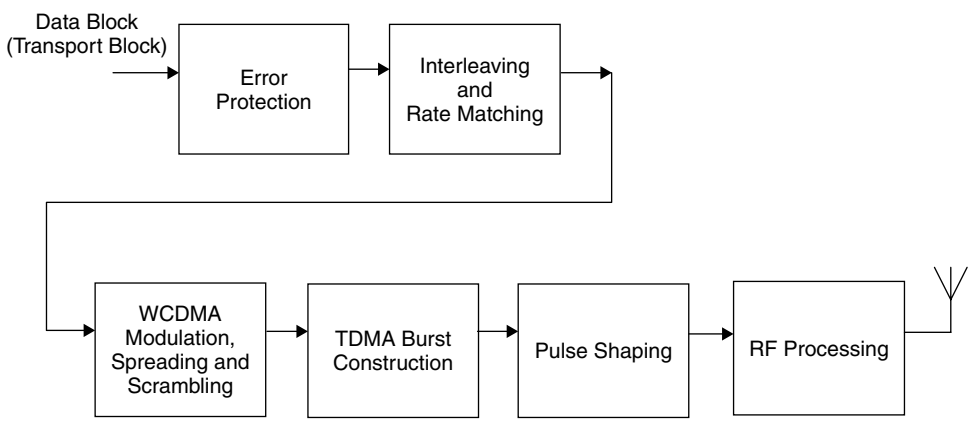

Figure 3.11 Essentials of Modem Tx-Processing

3.4.1 Error Protection

A Transport Block of data is first coded to protect against channel errors. Error protection is achieved by the following methods: (1) Block Error Coding by addition of CRC (Cyclic Redundancy Check) for Error Detection; (2) Forward Error Correction (FEC) coding, by either Convolutional Coding or Turbo Coding. Convolutional Coding rates may be 1/2 or 1/3, while the Turbo Coding rate is fixed at 1/3. These error protection methods are effective against random errors, but not against burst errors. Errors of the latter type are protected against by the Data Interleaving method, discussed in the next section.

CRC Coding: The size of CRC is 24, 16, 12, 8 or 0 bits and is signaled from higher layers. The parity bits are generated by one of the following cyclic generator polynomials:

$$g_{CRC24}(D) = D^{24} + D^{23} + D^6 + D^5 + D + 1 \tag{3.4}$$

$$g_{CRC16}(D) = D^{16} + D^{12} + D^5 + 1 \tag{3.5}$$

$$g_{CRC12}(D) = D^{12} + D^{11} + D^3 + D^2 + D + 1 \tag{3.6}$$

$$g_{CRC8}(D) = D^8 + D^7 + D^4 + D^3 + D + 1 \tag{3.7}$$

FEC by Convolutional Codes: Convolutional codes with constraint length 9 and coding rates 1/3 and 1/2 are defined. The configuration of the convolutional coder is presented in Figure 3.12. 8 tail bits with binary value 0 are added to the end of the code block before encoding. The initial value of the shift register of the coder are set to 'all 0' when starting to encode the input bits. The outputs are sequentially selected from output 0, output 1, etc.

Forward Error Correction by Turbo Codes: The scheme of the Turbo coder is a Parallel Concatenated Convolutional Code (PCCC) with two 8-state constituent encoders and one Turbo code internal interleaver. The coding rate of Turbo coder is 1/3. The structure of Turbo coder is illustrated in Figure 3.13.

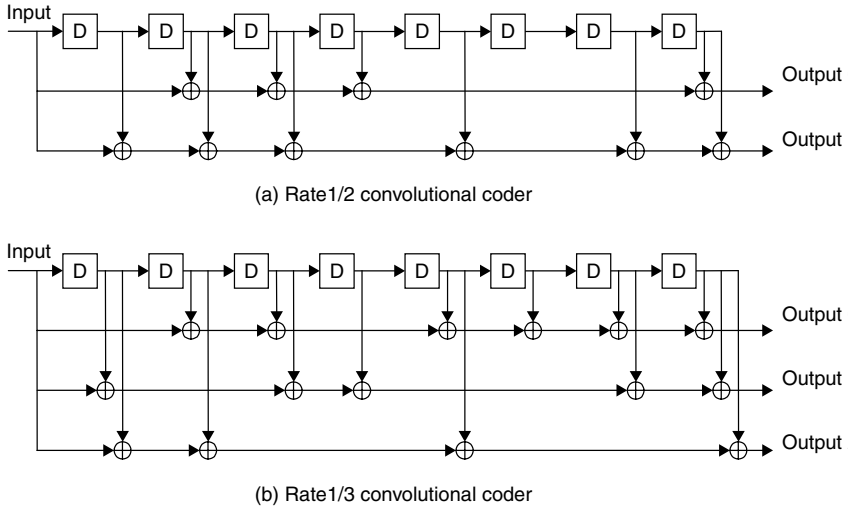

Figure 3.12 Convolutional Coders

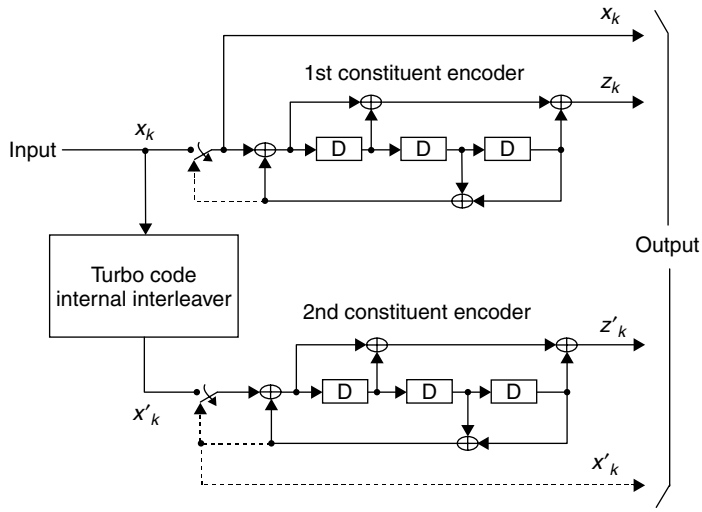

Figure 3.13 Structure of Rate 1/3 Turbo Coder (dotted lines apply for trellis termination only)

The transfer function of the 8-state constituent code for PCCC is:

$$\mathrm{G(D)} = \left[1, \frac{g_1(D)}{g_0(D)}\right] \tag{3.8}$$

where:

$$g_0(D) = 1 + D^2 + D^3 \tag{3.9}$$

$$g_1(D) = 1 + D + D^3 \tag{3.10}$$

The initial value of the shift registers of the 8-state constituent encoders is set to all zeros when starting to encode the input bits.

Output from the Turbo coder is $\{x_1, z_1, z'_1, x_2, z_2, z'_2, \ldots, x_K, z_K, z'_K, \}$ where $x_1, x_2, \ldots, x_K$ are the bits input to the Turbo coder, K is the number of bits, and $\{z_1, z_2, \ldots, z_K\}$ and $\{z'_1, z'_2, \ldots, z'_K\}$ are the bits output from first and second 8-state constituent encoders, respectively. The bits output from Turbo code internal interleaver are denoted by $\{x'_1, x'_2, \ldots, x'_K\}$ and these bits are to be input to the second 8-state constituent encoder.

Trellis termination is performed by taking the tail bits from the shift register feedback after all the information bits are encoded. The first three tail bits are used to terminate the first constituent encoder (upper switch of Figure 3.13 in lower position) while the second constituent encoder is disabled. The last three tail bits are used to terminate the second constituent encoder (lower switch of Figure 3.13 in lower position) while the first constituent encoder is disabled. The transmitted bits for trellis termination are: $\{x_{K+1}, z_{K+1}, x_{K+2}, z_{K+2}, x_{K+3}, z_{K+3}, x'_{K+1}, z'_{K+1}, x'_{K+2}, z'_{K+2}, x'_{K+3}, z'_{K+3}.\}$ Tail bits are padded after the encoding of information bits.

The Turbo code internal interleaver consists of bits-input to a rectangular matrix with padding, intra-row and inter-row permutations of the rectangular matrix, and bits-output from the rectangular matrix with pruning.

The number of input bits K takes a value of $40 \leq K \leq 5114$. The output of the channel coder is padded, if necessary, with extra bits so that the number of bits can exactly fit in an integer number of radio bursts.

3.4.2 Interleaving and Rate Matching

Data Interleaving is used to distribute burst errors, which are then corrected by FEC decoding. In WTDD, Interleaving is done in two stages as shown in Figure 3.14.

During the first interleaver, the output of the channel coder (after suitable padding if necessary) is input into a matrix row by row, after which the columns are permuted according to a rule [3, Section 4.2.5] and output column by column. Figure 3.15 below illustrates the concept.

The second interleaver is essentially same as the first, except that padding of bits may be needed during the construction of the matrix. These padded bits are pruned, as the interleaved bits are being output. In the first interleaver, the number of columns is 1, 2, 4 or 8, whereas the number of columns is 30 in the second interleaver.

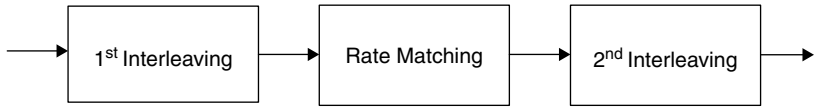

Figure 3.14 Two Stages of Interleaving

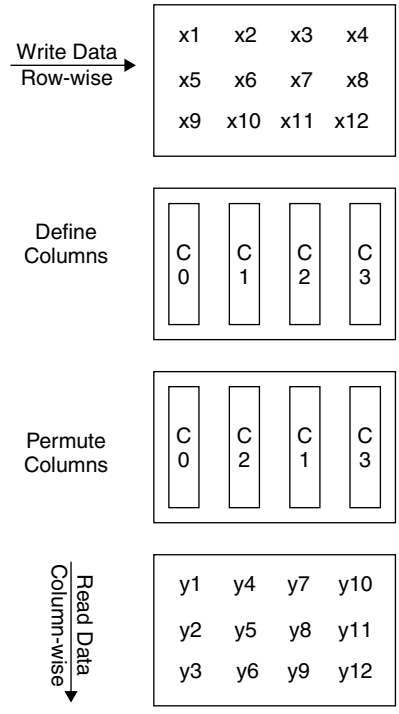

Figure 3.15 Principle of 1st Interleaving

Rate matching is a process by which bits are either repeated or punctured. Bits are repeated or punctured to ensure that the total bit rate after Transport Channel multiplexing is identical to the total channel bit rate of the allocated Physical Channels. (The concepts of Transport and Physical Channels will be introduced in Chapter 4.) Puncturing data bits also increases capacity, by minimizing the number of physical radio resources required.

3.4.3 WCDMA and TDMA Processing

For a discussion of WCDMA and TDMA processing, see Sections 3.3 and 3.2 respectively.

3.4.4 Pulse Shaping and Up Conversion

The complex valued chips are filtered with a pulse shaping filter, as shown in Figure 3.16. The pulse-shaping filter is a root-raised cosine (RRC) with roll-off $\alpha = 0.22$ in the frequency domain. The impulse response $RC_0(t)$ is

$$RC_0(t) = \frac{\sin\left(\pi \frac{1}{T_C}(1-\alpha)\right) + 4\alpha \frac{t}{T_C} \cos\left(\pi \frac{t}{T_C}(1+\alpha)\right)}{\pi \frac{t}{T_C}\left(1 - \left(4\alpha \frac{t}{T_C}\right)^2\right)} \tag{3.11}$$

where T_c is the chip duration.
After pulse shaping, the complex data is up-converted to the carrier frequency.

3.4.5 RF Characteristics

The RF characteristics include frequency characteristics and transmitter/receiver characteristics, the latter being considered separately for UE and BS. The frequency characteristics consist of frequency bands, channel spacing, and channel raster. The transmit characteristics consist of transmit power, frequency stability, RF spectrum and modulation imperfections. The receive characteristics consist of input sensitivity, input selectivity and spurious responses.

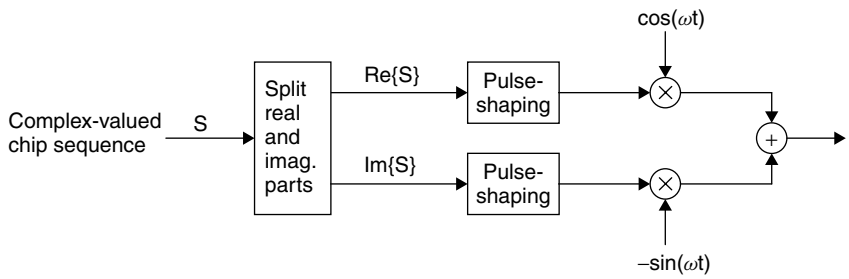

Figure 3.16 Pulse Shaping and Up Conversion

- Frequency Characteristics: The TDD frequency bands are 1900–1920 MHz and 2010–2025 MHz. The nominal channel spacing is 5 MHz, but it can be adjusted to optimize performance in a particular deployment scenario. The carrier frequency must be a multiple of 200 kHz. For convenience, the channel is denoted by a channel number, which is an integer obtained by multiplying the channel frequency in MHz by 5.
- Frequency Stability: The frequency deviation of the UE modulated carrier frequency should be within ±0.1 ppm relative to the BS carrier frequency, as perceived with a possible Doppler shift, over a timeslot. Similarly, the absolute frequency deviation of the BS carrier frequency should be within ±0.05 ppm over a timeslot.
- Transmit Power: The power transmitted by the UE is nominally either 10, 20, 30 or 40 dBm depending on whether the Power class is 1, 2, 3 or 4 respectively. Uplink Open Loop Power control provides a range of ±9 dB of transmit power under normal conditions and ±12 dB under extreme operating conditions.
  If the UE goes out of sync with the BS for more than 160 ms, then the UE is required to shut off transmit power within 40 ms. When the UE transmitter is 'off', any transmitted power should not exceed −65 dBm. The ramp up and ramp down of power should take place in 146 and 96 chips respectively. (Detailed masks can be found in [5]) All power values are defined over a bandwidth of 1/2 chip rate after RRC filtering.
  The power transmitted by a BS should not normally vary more than ±2 dB within a timeslot. There are no BS classes defined based on transmitted power. Downlink Closed (Inner) Loop Power control varies power in steps of either 1, 2 or 3 dB. The total range of transmit power is at least 30 dB with power control, with the minimum power being −30 dB. When the BS transmitter is 'off', any transmitted power should not exceed −79 dBm. The ramp up and ramp down of power should take place in 27 and 84 chips respectively. (Detailed masks can be seen in [6].)
- RF Spectrum: The bandwidth occupied by the transmitted signal, measured as the bandwidth containing 99% of the total power, should not exceed 5 MHz.

  Outside of the 5 MHz bandwidth, the out-of-band RF spectrum (excluding spurious emissions) should not exceed values detailed in [5] for UE and [6] for BS. For example, for the UE, the spectral ceiling goes from −35 dBc at 3.5 MHz deviation to −39 dBc at 12.5 MHz deviation when measured over 1 MHZ bandwidth. For the BS, an example mask is shown in Figure 3.17.

  The RF spectrum should be such that the transmitted signal does not spill into adjacent carriers, exceeding the allowable Adjacent Channel Leakage power Ratio (ACLR). For example, if the UE is of Power Class 2 or 3, the ACLR limit is 33 dB when the adjacent channel is 5 MHz away. For BS, the corresponding ACLR limit is 45 dB.
- Spurious Emissions: Spurious emissions (caused by transmitter effects such as harmonics emission, parasitic emission, intermodulation products and frequency conversion products) outside the wanted signal band should be limited to values given in TS 25.102 for UE and TS 25.105 for BS.
- Modulation Imperfections: Due to imperfections in the modulator, the pulse shaping filter and/or amplifier, transmitted waveforms deviate from the ideal waveforms. The deviation is measured in terms of Error Vector Magnitude (EVM) and Peak

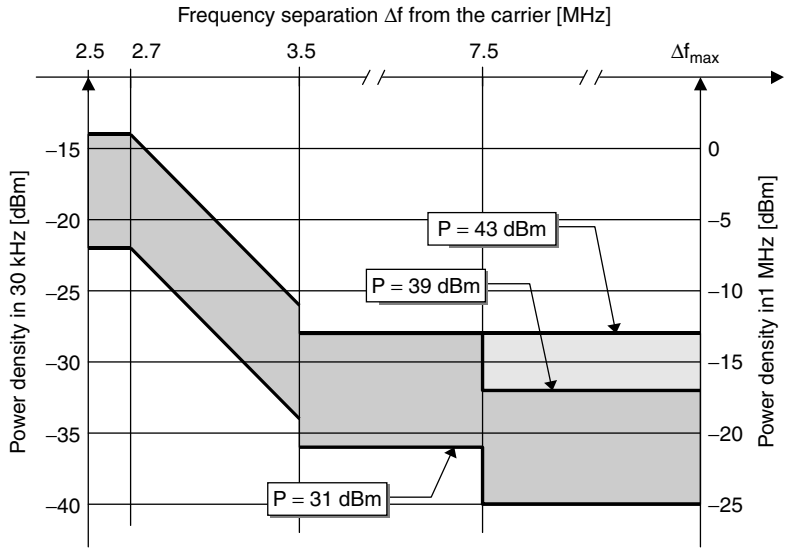

Figure 3.17 Spectrum Emission Mask

Code Domain Error (PCDE) for multicode transmissions. EVM is a mean-square error measurement of the difference between the ideal waveform and the transmitted waveform, not including errors due to frequency offset. PDCE is the projection of EVM onto the code domain and represents the interference between codes.

3.4.6 Transmit Diversity

WTDD supports Transmit Diversity in the downlink to improve link budget, whereby DL signals are transmitted by two antennas for improved and optimized reception by the UE. Transmit Diversity is typically not supported in the uplink.

Transmit Diversity Schemes can be divided into Closed Loop and Open Loop Diversity Schemes, depending on whether the Diversity scheme is or is not based on uplink channel information. Within the Open Loop Diversity approach, TDD supports both Switched and Non-Switched Diversity schemes. In the Switched scheme, the signals are transmitted alternately between the two antennas, whereas in the Non-Switched scheme, the signals are constantly transmitted on both the antennas using separate Spreading Codes and midambles. In TDD standards, the Switched Open Loop Diversity is referred to as TSTD (Time Switched Transmit Diversity) and the Non-Switched Open Loop Diversity is referred to as SCTD (Space Code Transmit Diversity). Figure 3.18 illustrates the three concepts.

In the Closed Loop Transmit Diversity approach, the uplink channel characteristics are estimated using the most recent uplink transmissions to the two receiving antennas and utilized to determine the optimal gains for the signals from the two antennas. A particularly simple choice is for the weights to be (0,1) or (1,0) which is called Selective Transmit Diversity.

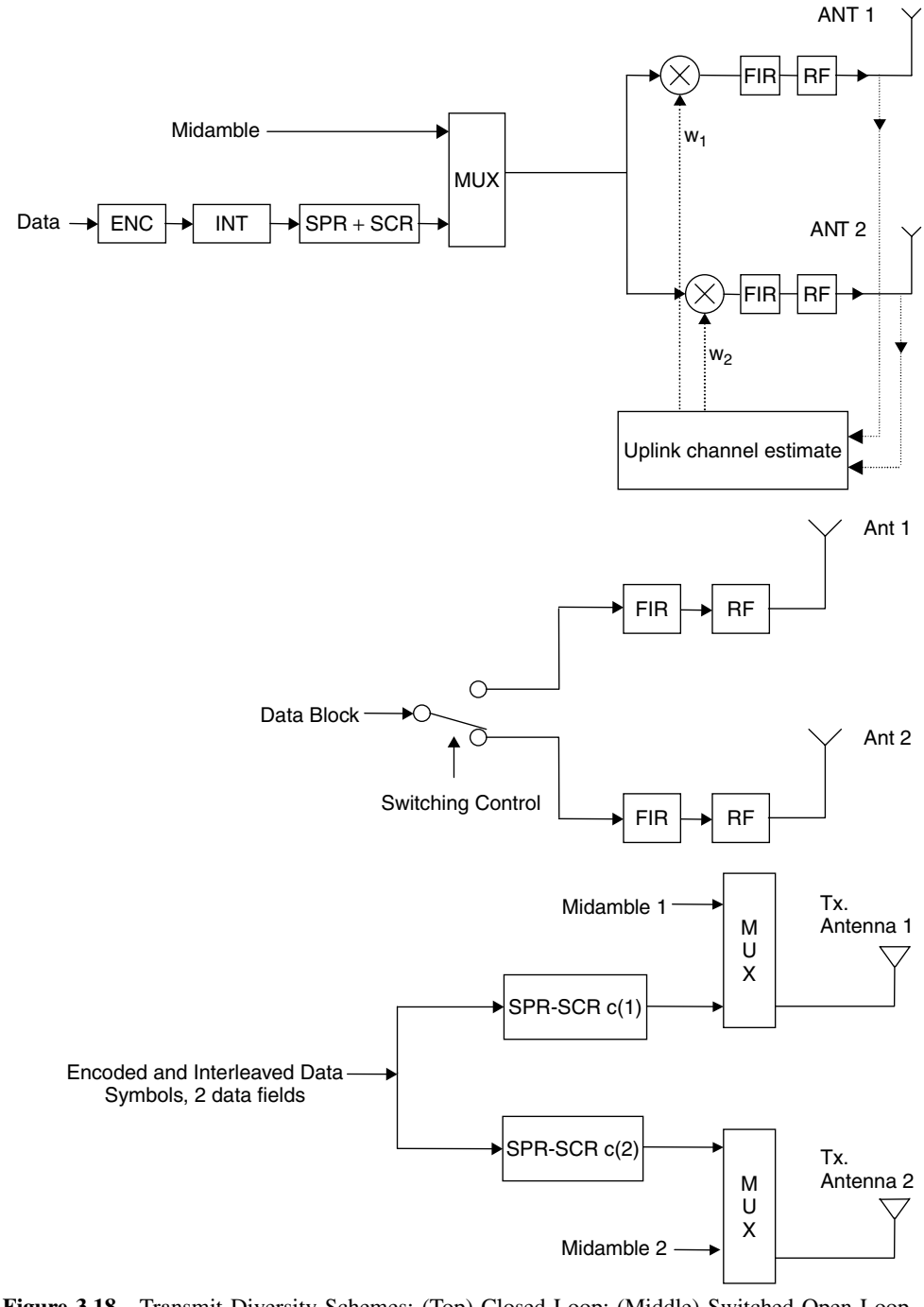

Figure 3.18 Transmit Diversity Schemes: (Top) Closed Loop; (Middle) Switched Open Loop – TSTD; (Bottom) Non-Switched Open Loop – SCTD

In TDD, the Closed Loop Transmit Diversity, TSTD and SCTD are used for Traffic Channels (DPCH and PDSCH), Synchronization Channel (SCH) and Beacon Channels, respectively. (These concepts will be explained in Chapter 4.)

3.5 MOBILE RADIO CHANNEL ASPECTS

In this section, we shall review the salient features of the mobile channel within which the modem has to work.

The radio signal propagation is highly dependent upon the physical scenario of the transmitter and receiver. Although there is a wide range of possible scenarios, the following are identified as a representative set for selecting a Radio Technology for IMT2000 [1, 2]:

Scenario 1 Base Station and Pedestrian Users in an Indoor Office Environment.
Scenario 2 Base Station Outdoors and Pedestrian Users in Indoor Office Environments and Outdoors.
Scenario 3 Base Station Outdoors and High Speed Vehicular Users.

The radio signals in each of these scenarios undergo three distinct types of impairments as they propagate from the transmitter to the receiver. They are:

Characteristic 1 Mean pathloss as a function of distance.
Characteristic 2 Slow variation around the mean due to shadowing and scattering.
Characteristic 3 Rapid Variation in the signal due to multipath effects. These are further characterized by the Time-Delay Spread of the impulse response (structure and statistics) and fading properties of the signal envelope/power (Probability Distribution and Spectrum).

3.5.1 Mean Pathloss and Shadow Characteristics

We now give a brief characterization of the pathloss and shadow loss in each of the above scenarios [1].

3.5.1.1 Base Station and Pedestrian Users Indoors

In this scenario, the pathloss is due to scatter and attenuation by walls, floors and metallic structures (such as partitions and filing cabinets). The mean pathloss is modeled as:

$$L = 37 + 30\log(R) + 18.3\ n^{\left(\frac{n+2}{n+1} - 0.46\right)} \text{ in dB} \tag{3.12}$$

where:

R = distance between transmitter and receiver

n = number of floors in the path

The additional loss in dB due to shadowing is modeled as a zero-mean normal (Gaussian) variable with a standard deviation of 12 dB. The shadowing loss is correlated as the user moves and the correlation function as a function of movement is defined as follows:

$$R(\Delta d) = e^{\left(\frac{-|\Delta d|}{d_{corr}} \ln 2\right)} \tag{3.13}$$

where Δd is the displacement and d_{corr} is the 'decorrelation distance' – that is the distance beyond which the shadowing loss correlation is 'small'. The decorrelation distance may be taken as 5 meters.

3.5.1.2 Base Station Outdoors and Pedestrian Users Indoors or Outdoors

In this scenario, the pathloss depends on whether the user is indoors or outdoors. If outdoors, the pathloss again depends on whether the obstructions between the UE and the BS have a clear first Fresnel zone or not. Thus, the general pathloss may be taken as R^{-4}:

$$L = 49 + 40\log(R) + 30\log(f) \quad \text{in dB} \tag{3.14}$$

where R = distance between transmitter and receiver and f = frequency.

A pathloss of free-space R^{-2} is appropriate if the first Fresnel zone is cleared and R^{-6} is UE is indoors. Detailed analytical formulae are available in [1]. An additional loss of 12 dB with a standard deviation of 8 dB may be assumed for building loss.

The effect of shadowing is modeled as a log-normal fading process with a standard deviation of 10 and 12 dB for outdoor and indoor users, respectively. The decorrelation distance, as defined in section 3.5.1.1, may be taken as 5 meters.

3.5.1.3 Base Station Outdoors and High Speed Vehicular Users

In this scenario, the pathloss may be taken as R^{-4}, although the pathloss is less for rural areas with flat terrain than urban and suburban areas with buildings. The formula below gives the pathloss for the case where carrier frequency is 2000 MHz, the BS antenna height is 15 meters and all the buildings are nearly of uniform height. For other frequencies and BS antenna heights, see [1].

$$L = 128.1 + 37.6\log(R) \quad \text{in dB} \tag{3.15}$$

where R = distance between transmitter and receiver.

In mountainous areas, a free-space pathloss of R^{-2}, may be appropriate if path blockage is avoided.

The effect of shadowing is modeled as a log-normal fading process with a standard deviation of 10 dB in urban and suburban areas. The decorrelation distance, as defined in Section 3.5.1.1, may be taken as 20 meters.

3.5.2 Multipath Characteristics

We now give a brief characterization of the multipath characteristics in terms of the time-varying channel impulse response from [6]. The time-varying channel impulse response

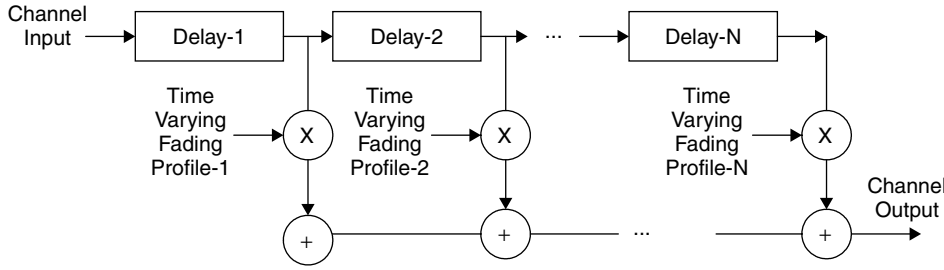

Figure 3.19 Tapped Delay Line Model for Multipath Fading Effects

Table 3.1 (Time-Varying) Channel Impulse Characterization

Case 1, speed 3 km/h		Case 2, speed 3 km/h		Case 3, 120 km/h	
Relative Delay [ns]	**Average Power [dB]**	**Relative Delay [ns]**	**Average Power [dB]**	**Relative Delay [ns]**	**Average Power [dB]**
0	0	0	0	0	0
976	−10	976	0	260	−3
		12000	0	521	−6
				781	−9

is modeled as a tapped delay line filter, with the tap weights being random and time varying, see Figure 3.19.

The randomness of the tap weights is characterized by a Rayleigh distribution. The time variation of the tap weights is characterized by the power spectrum, which has Doppler spectrum as follows:

$$S(f) \propto \frac{1}{\sqrt{1-\left(\frac{f}{f_D}\right)^2}} \text{ with } f_D = \text{Max Doppler frequency shift} = \frac{v.f}{c}$$

where f is the carrier frequency and v is the velocity of the UE.

In Table 3.1 the tap delays (relative to the first multipath component) and their relative average powers (which define the standard deviation of the Rayleigh variable describing the weight distribution) for three cases defined by 3GPP WG4 for TDD [6] are given.

3.6 MODEM RECEIVER ASPECTS

In this section, we shall review the salient features of a TDD-WCDMA Receiver.

3.6.1 RF Characteristics

- Input Sensitivity: The UE should work with BER less or equal to 0.001, when the input signal power (denoted as $\hat{I}_{or}$) is at least −105 dBm/3.84 MHz. The corresponding value for the BS is −109 dBm.

- Input Selectivity: The UE should work with BER less than or equal to 0.001, when the Adjacent Channel Selectivity (defined as the receive filter attenuation at the adjacent channel frequency relative to the assigned channel frequency) is 33 dB (for UE power class 2 or 3). The corresponding value for the BS is 58 dB.

3.6.2 Detection of Direct Sequence Spread Spectrum Signals

Section 3.3.1 described the basic principle of generating spread spectrum signals, using spreading codes (also known as direct sequences). Essentially, narrowband data bits are converted into wideband relatively-low-energy chips. The detection of such spread bits basically consists of correlating with the received chip sequence with the despreading code, a process known as despreading. For real-valued codes, the despreading code is the same as the spreading code, whereas for complex valued codes, the despreading code is the complex conjugate of the spreading code. The despreading operation may also be viewed as a correlation or a matched filter operation. It should be noted that the received chips and the spreading code should be synchronized in time for the correlation operation, see Figure 3.20.

As is well known, the main advantage of the spread spectrum modulation scheme is the processing gain, which is the ratio of the bandwidth of the wideband spread spectrum signal to that of the narrowband data signal. It is also capable of suppressing the interference caused by narrowband signals.

Based on the above basic principle of spread spectrum signal detectors, two types of CDMA detectors have been developed for multipath, multiple access channels. They are known as Rake Receiver and Joint Detectors, and they are described next.

3.6.3 Rake Receiver Structure

The common receiver implementation for a spread spectrum signal that has suffered multipath propagation is the so-called Rake receiver, shown in Figure 3.21.

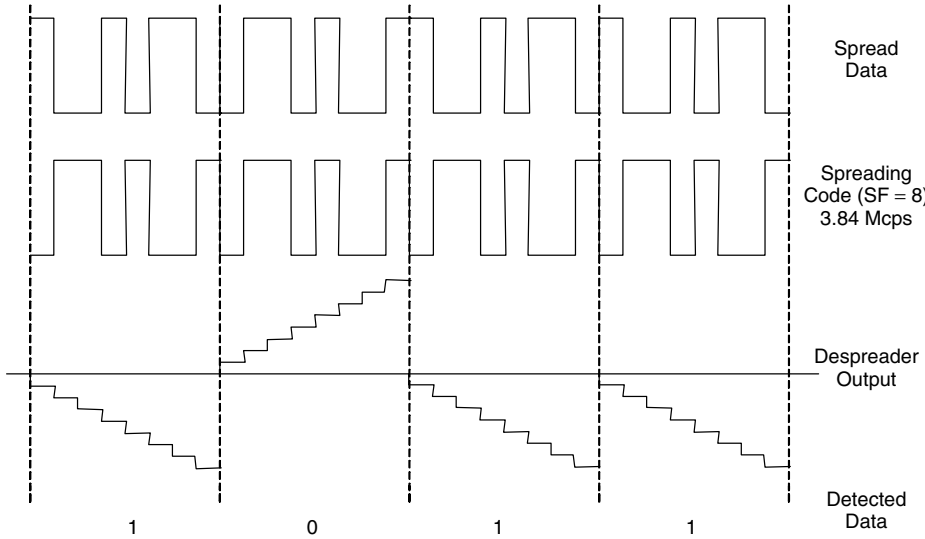

Figure 3.20 Detection of Spread Spectrum Signals

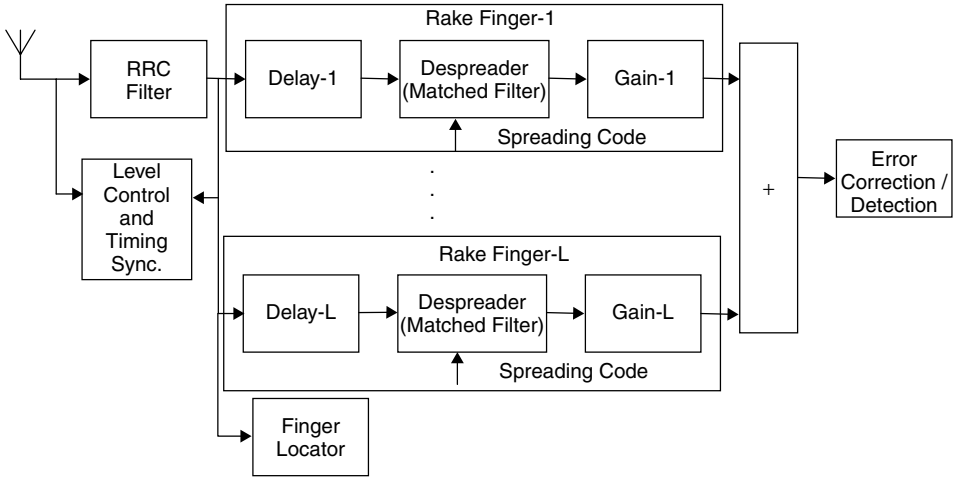

Figure 3.21 Rake Receiver Structure

At the very outset, the block marked as 'Level Control and Timing Sync.' automatically controls the power level of input signal for subsequent processing. Similarly, synchronization of the carrier frequency, as well as timing synchronization at the chip, symbol, timeslot and radio frame levels is achieved. The synchronized signal is now passed through an RRC filter, corresponding to its counterpart at the transmitter.

The RRC filtered signal is now processed for locating the significant multipath reflections (Finger Locator in Figure). Based on this information, Rake processing is done in parallel for the L-fingers. For each finger, the signal is delayed appropriately to align with the multipath signal under consideration, following which the signal is despread. The despreading is essentially a cross-correlation with the spreading code (or matched filtering). The output is an estimate of the symbol as detected in that multipath component, which is suitably scaled for summing with the other symbol estimates from the remaining fingers. The scaling may be based, for example, on the signal strength and quality (as in the case of Maximal Ratio Combining).

After the symbol estimates from the various Rake fingers are summed, symbol and data detection is done by the FEC decoder, or simply by thresholding for the case of no coding.

The detected data bits are now processed for error correction (the inverse operation to the Convolutional or Turbo coding performed at the transmitter). For Convolutional codes, the commonly employed method is the Viterbi algorithm. Turbo decoding is considerably more complex but also more powerful. Following the decoder processing, blocks of data are checked for the CRC, based on which block errors are detected.

However, for TDD-WCDMA, the Rake Receiver is not optimal. The main reason is that the spreading factors are small (16 max), so that shifted versions of the multipath components result in excessive code cross-correlation. As a result, the common assumption in the Rake Receivers that the interference from all other users in the same cell is sufficiently uncorrelated so that it can be modeled as additive Gaussian noise is not valid in TDD-WCDMA. Therefore, the Joint Detection method as explained in the next section is preferred.

3.6.4 Joint Detection Receiver Structure

Joint Detection (JD) refers to the detection of the data of not only the intended user, but also all the other users in the same timeslot and in the same cell. No assumptions need be made regarding the low correlation of multipath components and signals of other users. The very fact that TDD-WCDMA uses short spreading codes and that TDD-WCDMA supports a small number of simultaneous users renders the JD techniques to be computationally feasible. The basic receiver structure using JD principles is shown in Figure 3.22.

Let there be K users in the timeslot of interest in a given cell, each with its own midamble (training sequence) and spreading code. Since all users belong to the same cell, their scrambling codes are the same. Each of these signals is passed through an RRC filter, after controlling the signal level and achieving timing synchronization. The channel impulse responses are estimated for each of these users. This is done in an efficient manner thanks to the clever design of the training sequences of each of the users in the same timeslot, as described in Section 3.2.2.

The channel impulse responses are used to filter the various spreading codes of the K users, so that the filter outputs capture the complete multipath characteristics of the channels. The filtered signals are used as reference signals for despreading (matched filtering), producing estimated symbols of the users. These are now equalized and optimally detected in a single step producing the detected data symbols of all the users.

Finally, Convolutional Decoders or Turbo Decoders process the data bits to correct for any errors. These corrected bits are processed for Block Decoding by CRC checking.

Uplink vs. Downlink Application: In the uplink direction, the Base Station (i.e. Node B) needs to detect the data of all K users and further knows their individual midambles and spreading codes. Therefore the application of a JD-based receiver is natural and efficient. However, in the downlink direction, the UE needs to detect only data meant for itself and there is no need to detect data meant for other users. Furthermore, the UE does not know, in general, how many other users are active in the timeslot (i.e. K), their spreading codes and their midambles (or more accurately the midamble shifts). Yet, the JD method

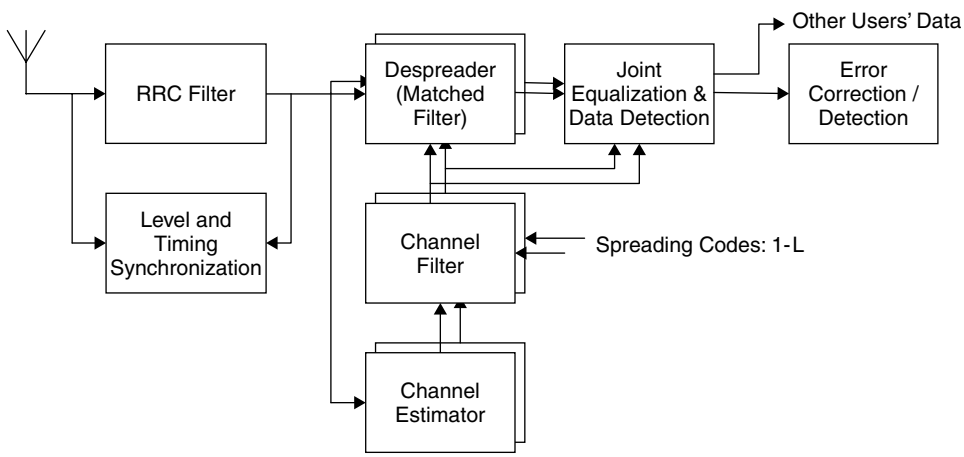

Figure 3.22 Joint Detection Receiver Structure

can be applied at the UE also, by estimating this information in a 'blind' manner. This process is called Blind Code Detection.

REFERENCES

[1] ETSI Technical Report TR 101 112 v3.2.0 April 1998, 'UMTS: Selection Procedures for the Choice of Radio Transmission Technologies of the UMTS' (UMTS 30.03 version 3.2.0).
[2] ITU-R M.1034.
[3] 3GPP TR 25.222 v4.6.0, 2002–12. '3GPP; TSG RAN; Multiplexing and Channel Coding (TDD) (Release 4)'.
[4] 3GPP TR 25.223 v4.5.0, 2002–12. '3GPP; TSG RAN; Spreading and Modulation (TDD)(Release 4)'.
[5] 3GPP TR 25.102 v4.4.0, 2002–03. '3GPP; TSG RAN; UE Radio Transmission and Reception (TDD) (Release 4)'.
[6] 3GPP TR 25.105 v4.4.0, 2002–03. '3GPP; TSG RAN; BS Radio Transmission and Reception (TDD) (Release 4)'.
[7] 3GPP TS 25.221, v.3.4.0 2000–09. '3GPP TSG RAN: Physical Channels and Mapping Transport Channels into Physical Channels (Release 1999)'.

4

TDD Radio Interface

4.1 OVERVIEW

Due to the complex nature of the TDD Radio Interface, it is convenient to describe it in terms of OSI-like Protocol Layers. Basically, the Radio Interface can be split into Physical Layer (Layer-1), Radio or Data Link Layer (Layer-2) and what may be called the System Network Layer (Layer-3). In accordance with the usual meaning of the OSI-layers, the Physical Layer describes how data signals are transferred across the Radio Link between the UE and the UTRAN. For example, it includes various RF and TDD-WCDMA aspects. The Radio Link Layer describes how data from one or more higher layer sources is transmitted over a single Radio Link. For example, it spells out how data is segmented, numbered for retransmission, how multiple higher layer data signals are multiplexed, etc. Finally, the System Network Layer describes the end-to-end connection from the UE to the UTRAN to the CN. As such, it describes methods and messages needed for establishing Radio Links as well as UMTS Bearers, which are communication paths between the UE and the CN. Furthermore, Layer-3 also manages the mobility of the UE.

It is useful to relate these Radio Interface Protocol Layers to the Access and Non-Access Strata introduced in Chapter 2. Clearly, the Physical Layer Protocols and the Radio Link Layer Protocols belong to the Access Stratum, as they operate between the UE and the UTRAN. However, the System Network Layer belongs to both Access Stratum and Non-Access Stratum because some parts deal with establishing Radio Links and other parts deal with communicating with the CN. Figure 4.1 depicts these concepts.

In this book, we shall concentrate only on the Access Stratum Protocols that are TDD-specific. Among these, the main Layer-3 protocol is RRC (Radio Resource Control), whereas the main Layer-2 protocols are RLC (Radio Link Control) and MAC (Medium Access Control) protocols. Finally, the Layer-1 functions can be split into two main categories, namely, Coding+Multiplexing and Modulation+RF Processing.

The data transport across the Radio Interface is described in terms of 'radio channels', which may be loosely characterized as a set of communication resources. Since the Radio Interface is characterized in terms of a number of layers, a number of radio channel types are defined. They are: Radio Access Bearer, Radio Bearer, Logical Channels, Transport Channels, Coded-Composite Transport Channels and Physical Channels. These may be

Wideband TDD: WCDMA for the Unpaired Spectrum P.R. Chitrapu
© 2004 John Wiley & Sons, Ltd ISBN: 0-470-86104-5

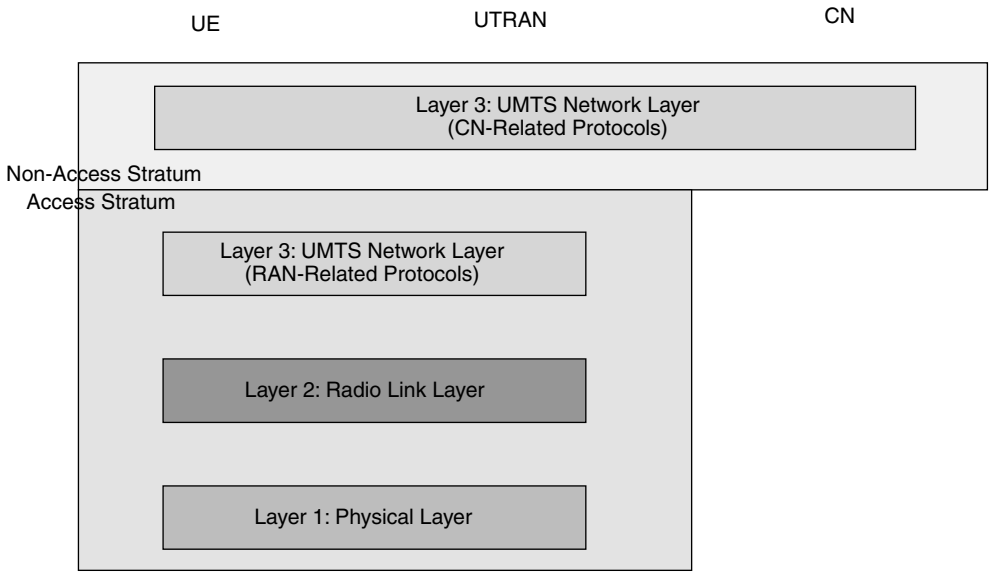

Figure 4.1 Layered Model for the Radio Interface

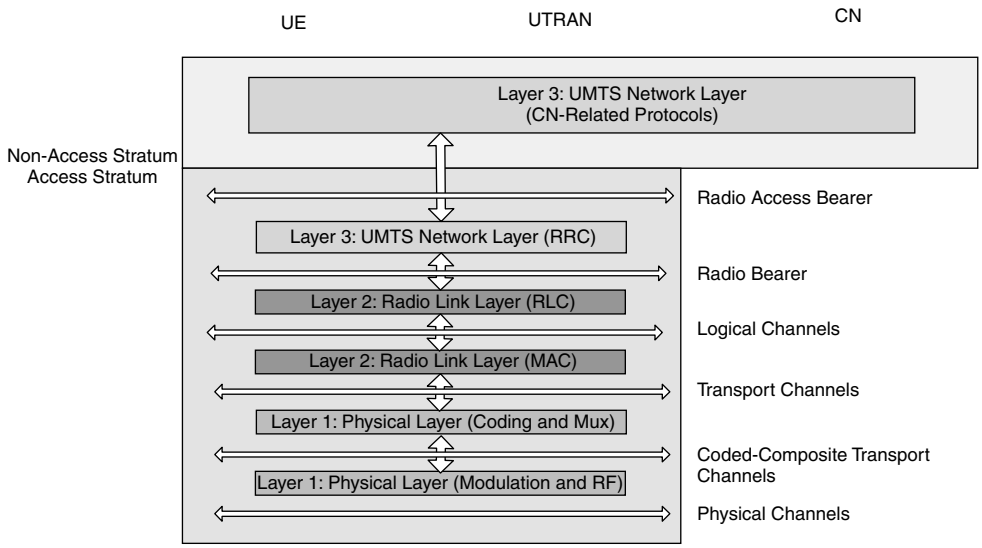

Figure 4.2 Concept of Radio Channels

interpreted as data transport services provided by a lower layer to an immediately higher layer and are depicted in Figure 4.2.

A Radio Access Bearer (RAB) represents an end-to-end connection over the RAN as seen by the CN, whereas the Radio Bearer is a connection over the radio interface (Uu) as seen by the UTRAN. Accordingly, a RAB is a combination of an RB and a connection over the Iub interface. A Radio Bearer consists of a Logical Channel, which essentially

defines what *type* of information is being transferred (e.g. user specific data, common data, etc.). Each Logical Channel is mapped onto a Transport Channel (TrCH), which defines *how* the data is being transferred. One or more Transport Channels are coded for error protection and multiplexed to form a so-called Coded-Composite Transport Channel (CCTrCH). Each CCTrCH is mapped onto one or more Physical channels, which transfer the data by converting them into TDD-WCDMA format.

4.2 PROTOCOL ARCHITECTURE

The detailed structure of the Radio Interface in terms of the protocols, radio channels, User and Control Planes (which were introduced in Chapter 2) is shown in Figure 4.3. Shown also are Service Access Points (SAPs), which are interfaces between adjacent layers and are marked as circles/ellipses.

Layer 1, or the Physical Layer, processes digital data from Layer 2 higher layers using TDD-WCDMA methodology and transmits them over the radio interface using the

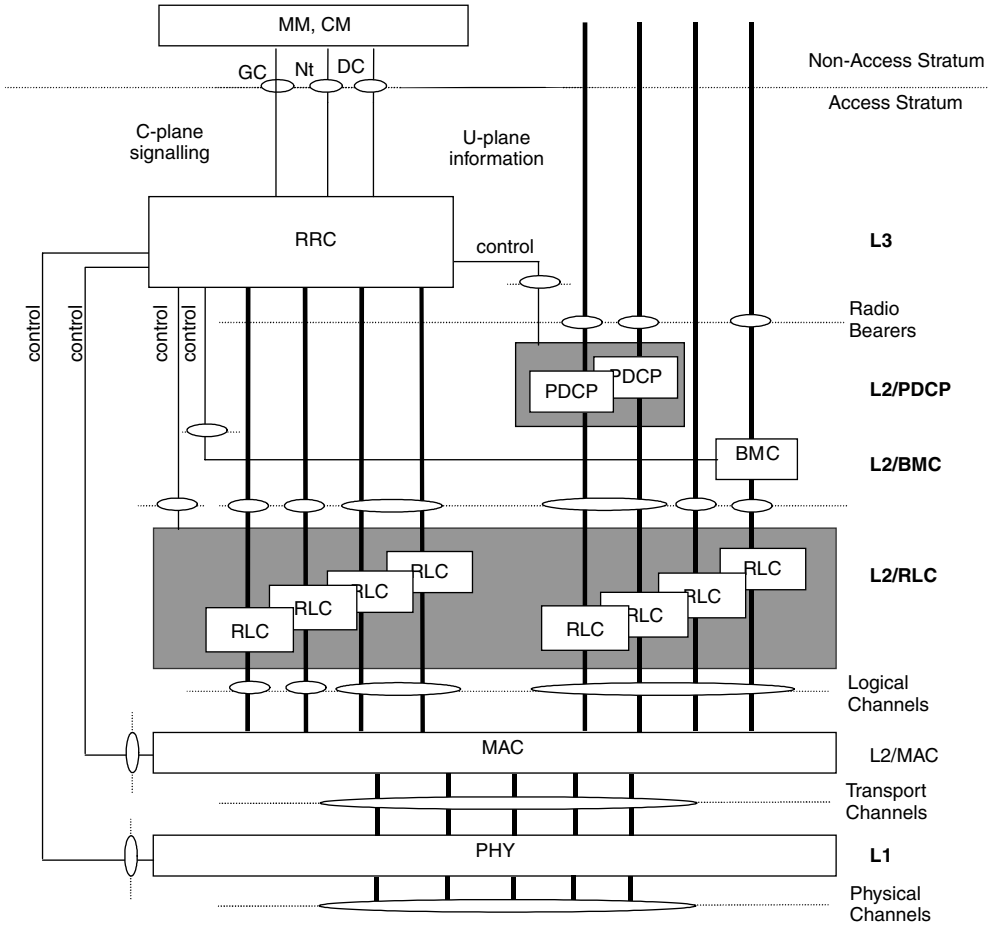

Figure 4.3 Radio Interface Protocol Architecture

Physical Channels. Conversely, it processes radio signals from the Physical Channels of the radio interface and delivers digital data to Layer 2 for further processing. A number of Physical Channels are defined in the TDD standards for various specific functions.

Layer 2, or the Radio Link Layer, provides data transport services to Layer 3 using Radio Bearers. As shown in Figure 4.3, Layer 2 also separates Layer 1 data into User plane (U-plane) data and Control plane (C-plane) data. Conversely, it multiplexes the User plane and Control plane data provided by Layer 3. Accordingly, the standards distinguish between the Signaling Radio Bearers and (Traffic) Radio Bearers. Layer 2 is split into three sublayers, called MAC, RLC and the PDCP/BMC sublayers, as shown in Figure 4.3. The services that the MAC sublayer provides to the RLC sublayer are called Logical Channels. (There is no special name given to the Service Access Points between the RLC sublayer and the PDCP and BMC sublayers.)

In the C-plane, Layer 3, or the UMTS Network Layer, is partitioned into sublayers where the lower sublayer, denoted as Radio Resource Control (RRC), interfaces with Layer 2 as well as Layer 1. RRC terminates in the UTRAN and belongs to the Access Stratum. The higher sublayer contains signaling functions such as Mobility Management (MM) and Call Control (CC). This sublayer terminates in the Core Network and belongs to the Non-Access Stratum. The interface to the higher L3 sublayers (CC, MM) is defined by the General Control (GC), Notification (Nt) and Dedicated Control (DC) SAPs.

Table 4.1 gives a complete list of TDD Physical, Transport and Logical Channels, whose details are provided in subsequent sections of this chapter. Since the channel names do not clearly suggest the type of channel, we shall explicitly specify the channel type as a suffix, as shown in the last column of the table. When clear from the context, sometimes we drop the suffix.

The Logical Channels are broadly classified into Traffic Channels and Control Channels, to carry User Data/Traffic and Signaling/Control data respectively in UL and/or DL directions. Of the Traffic Channels, a Dedicated Traffic Channel (DTCH/L) is exclusively assigned to a UE, whereas a Common Traffic Channel (CTCH/L) is shared among multiple UEs. Of the Control Channels, the Broadcast Control Channel (BCCH/L) is used by the UTRAN to broadcast control information in the downlink direction to all the UEs in a cell. The Paging Control Channel (PCCH/L) is used by the UTRAN to page a specific UE, for example, to alert the UE of an incoming call. The Common Control Channel (CCCH/L) is a common channel shared by all UEs in a cell to convey control-signaling messages between UE and the UTRAN. Thus CCCH/L is applicable in both Uplink and Downlink directions. The Dedicated Control Channel (DCCH/L) is used by a specific UE to convey control signaling messages between itself and the UTRAN. Finally, the Shared Channel Control Channel SHCCH/L is the channel for conveying the signaling control information between the UTRAN and all the UEs using the shared transport channels USCH/T and DSCH/T. For the CCCH/L and the SCCH/L channels, a UE identity is included in the message to identify which UE the message is from (UL) and directed to (DL).

The Transport Channels are broadly classified as Dedicated channels and Common (or shared) channels to support the Logical Channels defined above. The Dedicated Transport Channel (DCH/T) is used for the transport of traffic and/or signaling data of a single UE. A number of Common Transport Channels are defined suited for a number of purposes such as transport of Downlink and Uplink Traffic Data (DSCH/T and USCH/T), Downlink and Uplink Signaling data and small amounts of traffic data (DSCH/T, USCH/T, FACH/T and

Table 4.1 Radio Channels

	Type	Name	Stds	Book Notation
Logical Channels	Traffic Channels	Dedicated Traffic Channel	DTCH	DTCH/L
		Common Traffic Channel	CTCH	CTCH/L
		Broadcast Control Channel	BCCH	BCCH/L
		Paging Control Channel	PCCH	PCCH/L
	Control Channels	Common Control Channel	CCCH	CCCH/L
		Dedicated Control Channel	DCCH	DCCH/L
		Shared Channel Control Channel	SHCCH	SHCCH/L
Transport Channels	Dedicated Transport Channels	Dedicated Channel	DCH	DCH/T
		Random Access Channel	RACH	RACH/T
		Forward Access Channel	FACH	FACH/T
	Common Transport Channels	Downlink Shared Channel	DSCH	DSCH/T
		Uplink Shared Channel	USCH	USCH/T
		Broadcast Channel	BCH	BCH/T
		Paging Channel	PCH	PCH/T
Physical Channels	Dedicated Physical Channels	Dedicated Physical Channel	DPCH	DPCH/P
		Primary Common Control Physical Channel	P-CCPCH	P-CCPCH/P
		Secondary Common Control Physical Channel	S-CCPCH	S-CCPCH/P
		Physical Random Access Channel	PRACH	PRACH/P
	Common Physical Channels	Physical Uplink Shared Channel	PUSCH	PUSCH/P
		Physical Downlink Shared Channel	PDSCH	PDSCH/P
		Paging Indicator Channel	PICH	PICH/P
		Synchronization Channel	SCH	SCH/P

RACH/T) and Downlink Signaling Data such as Broadcast and Paging data (BCH/T and PCH/T). The Random Access Channel (RACH/T) is primarily used by a UE to perform the initial access to the UTRAN before any Radio Resources are dedicated or allocated to the UE. As such, it is a contention-based channel, where collisions could occur between RACH/T transmissions from multiple UEs at the same time.

In a similar way, the Physical Channels are classified into a single Dedicated Channel (DPCH/P) and a number of Common Channels to implement the Transport Channels defined above. Two additional physical channels are defined, namely the Synchronization

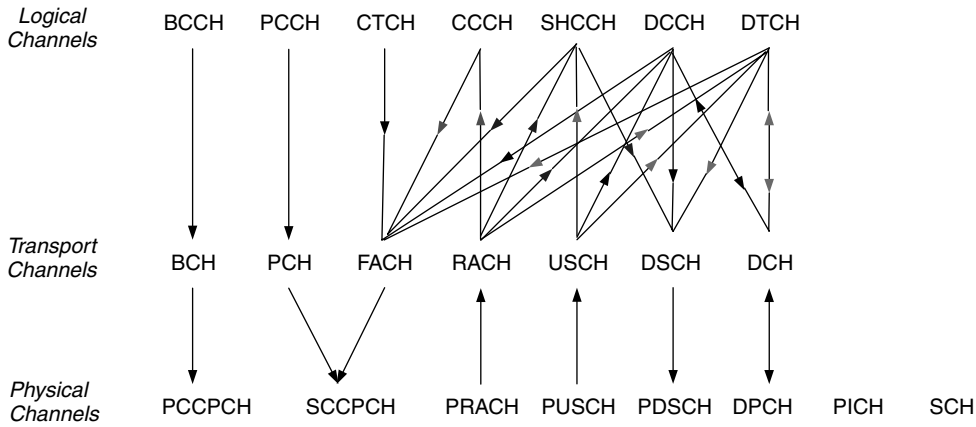

Figure 4.4 Mapping of Logical, Transport and Physical Channels*

Channel (SCH/P), which provides synchronization information required by the UEs and the Paging Indicator Channel (PICH/P), which alerts idle UEs when paging data should be decoded. These are explained in sections 4.3.1.3 and 4.3.1.8 respectively.

The TDD Radio Interface provides a great amount of flexibility in implementing Logical Channels in terms of Transport Channels and in turn Transport Channels in terms of Physical Channels. For example, a Logical Channel can be implemented by more than one Transport Channel (DCCH/L by RACH/T or USCH/T) and a Transport Channel can implement more than one Logical Channel (FACH/T for DCCH/L and DTCH/L). Figure 4.4 illustrates the complete mapping between Logical, Transport and Physical Channels. The downward and upward arrows indicate Downlink and Uplink Channels.

The data that flows across the Radio Interface essentially consists of User Traffic data and Signaling Messages. The Signaling Messages can in turn be classified into RRC-generated signaling messages (i.e. AS messages) and NAS messages generated in the higher layers.

4.3 LAYER 1 STRUCTURE

4.3.1 Physical Channels

4.3.1.1 Definitions

A physical channel is defined by frequency, timeslot, channelization code, burst type and allocated radio frames. The scrambling code is cell-specific, so that all the physical channels in a cell use the same scrambling code.

As explained in Chapter 3, the frequency is a multiple of 200 kHz within the TDD band, which is 1900–1920 MHz and 2010–2025 MHz. There are 15 timeslots per frame, numbered 0 through 14, 16 channelization codes and 3 Burst types. The frame allocation is specified in terms of a number of parameters, such as a start frame, duration, etc.

* One of the BCCH/L messages, "System Information Update", is mapped onto FACH/T.

The duration can be finite or unspecified (i.e. 'infinite'). Furthermore, the allocation of frames may be continuous (every consecutive frame) or discontinuous (only a subset of frames).

The data rate of a physical channel depends primarily on the used midamble length and the spreading factor of the channelization code and to a lesser extent on the guard period length and the presence of any TFCI and/or TPC bits.

We recall the list of Physical Channels from Table 4.1:

1. Dedicated Physical Channel (DPCH/P)
2. Primary Common Control Physical Channel (PCCPCH/P)
3. Secondary Common Control Physical Channel (SCCPCH/P)
4. Physical Random Access Channel (PRACH/P)
5. Physical Uplink Shared Channel (PUSCH/P)
6. Physical Downlink Shared Channel (PDSCH/P)
7. Paging Indicator Channel (PICH/P)
8. Synchronization Channel (SCH/P)

4.3.1.2 Dedicated Physical Channel: DPCH/P

Dedicated Physical Channels are the primary means of transferring user traffic across the radio interface in the Downlink and Uplink directions. Some of the key parameters defining a DPCH/P are: Timeslot, Burst Type, Midamble Shift, Channelization Code(s) and Frame Allocation Parameters. (Note that the 3GPP standards are inconsistent with respect to the inclusion of the Frame Allocation Parameters in the definition of a Physical Channel. In this book, we choose to include it in the Physical Channel definition.)

The Spreading Factors for the channelization codes for Downlink channels are 16 or 1, whereas those for Uplink channels are 16, 8, 4, 2 or 1. Downlink and Uplink channels are independently specified, so that they use different timeslots.

The Frame Allocation Parameters consist of Activation Time, Duration, Repetition Period and Repetition Length. The Activation Time refers to the Connection Frame Number at which the DPCH/P starts and is a value from 0 to 255. The Duration is the number of frames for which the DPCH/P is defined and is a number from 1 to 4096 or a number indicating 'infinite'. The Repetition Period is a number with values 1, 2, 4, 8, 16, 32 or 64, which defines the Frame Allocation periodicity within the duration of the DPCH/P. The Repetition Length is a number from 1 to (Repetition Period -1) and denotes the number of allocated frames within the Repetition Period. See RRC Spec [6] for further details.

Figure 4.5 illustrates some examples of physical channels: The horizontal axis is marked in terms of Connection Frame Number and the vertical axis indicates the channelization codes (only 10 out of the possible 16 are shown, for the sake of simplicity). For example, the Physical Channel #1 (marked by triangular symbols) uses Channelization Code #9. Starting at CFN#4, five successive frames out of every eight frames are allocated periodically. The allocation is unspecified, so that it continues without limit (until the channel is released by higher layer procedures).

Multiple physical channels can be allocated per CCTrCH to support higher data rates in both UL and DL. The individual channels can be separated into time domain (by assigning multiple timeslots in a radio frame) or into the code domain (by assigning multiple codes

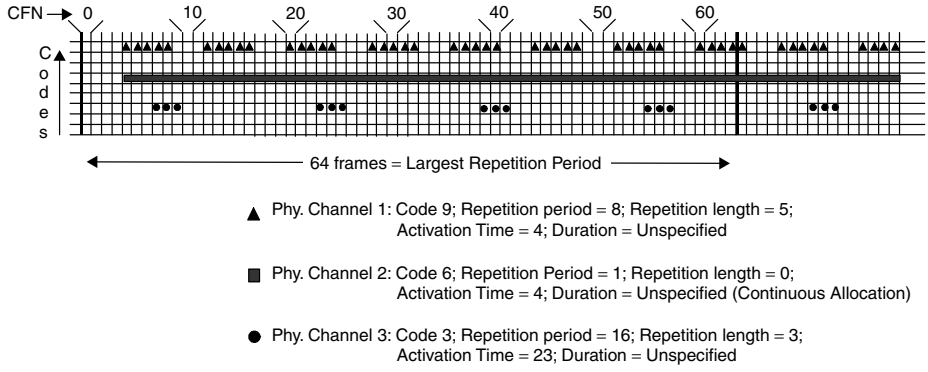

Figure 4.5 Physical Channel Examples

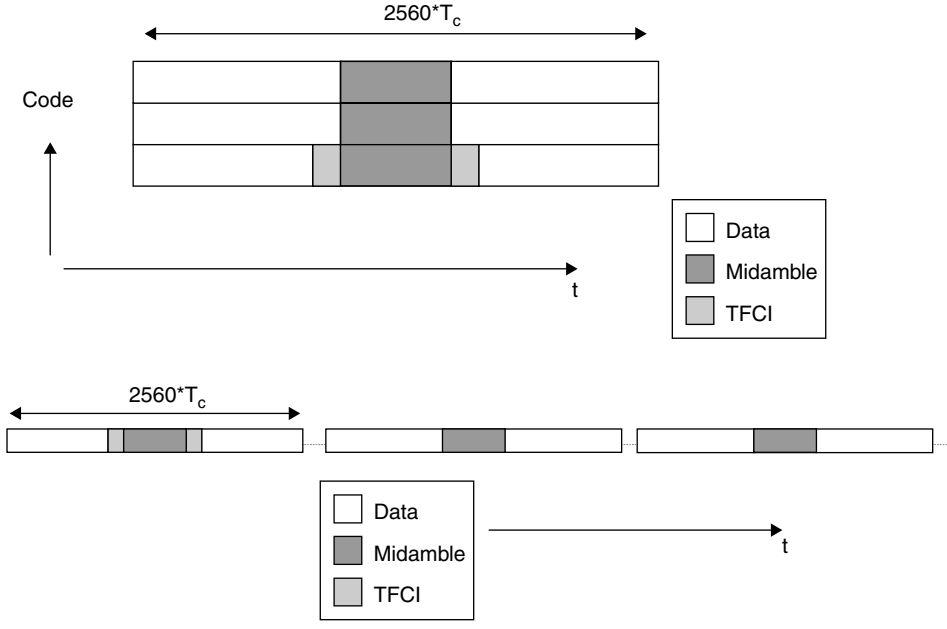

Figure 4.6 MultiChannel Examples: (Top) Code domain; (Bottom) Time domain

in the same timeslot) or both. The maximum number of codes per timeslot in a radio frame that can be assigned to a single UE is 2 in UL. In the DL, all 16 codes in a timeslot can be assigned to the same UE. Figure 4.6 illustrates examples of multiple codes and multiple timeslots to support a CCTrCH. (The meaning of TFCI bits is explained in Section 4.3.2).

The transmit power of the data parts of physical channels are either set to some fixed level (for beacons) or are dynamically power controlled. Multiple physical channels in one timeslot, i.e. multicodes, can have different power levels. The transmit power of the midamble part is set such that the average power of the midamble part is the same as the average power of the data part.

4.3.1.3 Synchronization Channel: SCH/P

The Synchronization Channel provides signals by which the UE can establish initial chip level synchronization with the UTRAN. The SCH/P is transmitted in one or two timeslots per every consecutive frame, as follows:

Case 1: SCH/P allocated in one TS per frame: Time Slot #k, $k = 0 \ldots .14$

Case 2: SCH/P allocated in two TSs per frame: Time Slots # k and #k+8, $k = 0 \ldots 6$;

The position of SCH/P (value of k) in the frame can change on a long-term basis.

Each time slot containing the SCH/P carries a Primary Synchronization Code (PSC) and three Secondary Synchronization Codes (SSCs), each having 256 chips. They are offset from the timeslot edge by t_{offset}, which can take one of 32 values. The timing offset enables the system to overcome the so-called capture effect, where the SCH/P from different base stations may overlap due to base station synchronization. The power of each SSC is 1/3 the power of the PSC.

While the PSC is the same for all cells, the SSCs are selected from the 12 possible codes. Each of the SSCs is modulated over a two-frame cycle with two modulating symbols per frame. The modulating pattern has a unique (1:1) relationship with the Code Group and the value of timing offset. Corresponding to the 32 timing offset values, there are 32 Code Groups, numbered from 0 through 31. The time offset may be used later to identify the code group without having to decode the SSCs, for example, when searching neighbor cells. Full details can be found in [3].

Figure 4.7 illustrates an example of SCH for Case 2, where the Primary and Secondary Synchronization Bursts are in timeslot $k = 0$ and $k = 8$. The PSC is denoted as Cp and the 12 SSCs are denoted as {C0, C1, C3, C4, C5, C6, C8, C10, C12, C13, C14, C15}. The modulating symbols are denoted as {b1, b2, b3} and their association with the Code Group and timing offset are given in Table 4.2.

Each Code Group supports four Cell Parameters, which in turn uniquely specify the cell-specific Scrambling and Midamble Codes. An example is shown in Table 4.3.

4.3.1.4 Primary Common Control Physical Channel: PCCPCH/P

As depicted in Figure 4.4, the Primary Common Control Physical Channel (PCCPCH/P) is used by the UTRAN to broadcast control information that is common to all UEs in a cell. It is located in the SCH/P time slot 'k' (for both Case 1 & Case 2) . PCCPCH/P uses fixed spreading with a spreading factor $SF = 16$ and channelization code $c_{Q=16}^{(k=1)}$, see Figure 3.10. The burst type 1 is used. The midamble is $m^{(1)}$ generated by the cell-specific Basic Midamble Sequence, if there is no SCTD (Space Code Transmit Diversity). If SCTD is used, midambles $m^{(1)}$ and $m^{(2)}$ are used for the first and second antennas, see Section 3.2.2.

4.3.1.5 Secondary Common Control Physical Channel: SCCPCH/P

As depicted in Figure 4.4, the Secondary Common Control Physical Channel is a downlink channel, used for Paging via PCH/T and for sending signaling messages or small amounts of data to the UE via FACH/T. The SCCPCH/P uses fixed spreading with a spreading

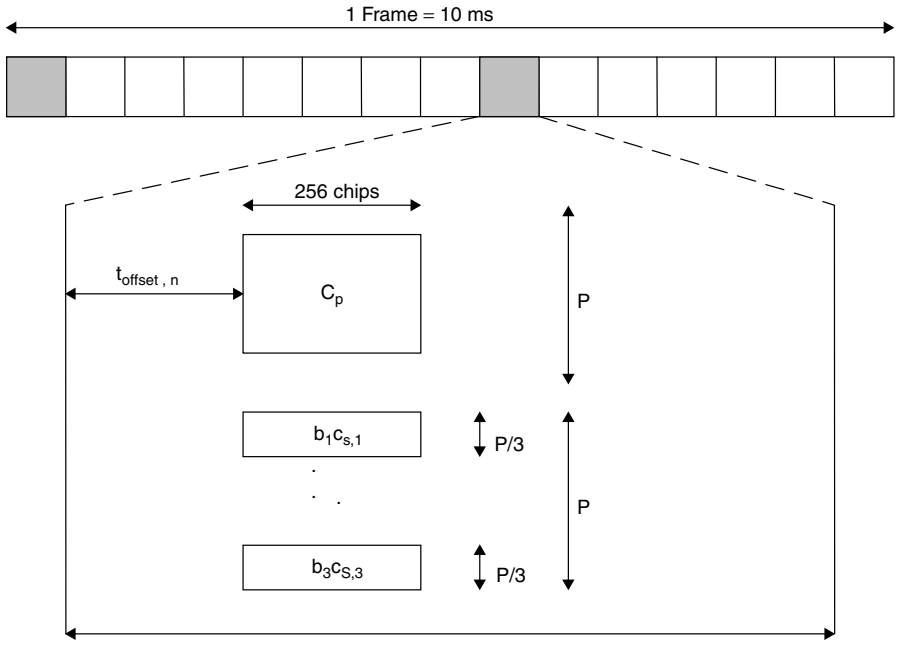

$C_{s,i} \in \{C_0, C_1, C_3, C_4, C_5, C_6, C_8, C_{10}, C_{12}, C_{13}, C_{14}, C_{15}\}$, i = 1,2,3

Figure 4.7 Structure of Synchronization Channel

Table 4.2 SSC Modulation and Code Group/Timing Offset Association

SSC Codes	Frame 1		Frame 2		Code Group	Timing Offset
	Slot k	Slot (k + 8)	Slot k	Slot (k + 8)		
SSC1	C1	C1	-C1	-C1		
SSC2	C3	C3	-C3	-C3	0	t_0
SSC3	C5	-C5	C5	-C5		
SSC1	C1	C1	-C1	-C1		
SSC2	-C3	-C3	C3	C3	1	t_1
SSC3	C5	-C5	C5	-C5		

factor SF = 16 and burst types 1 or 2. There may be more than one SCCPCH/P in a cell to meet the traffic demands. The details of the SCCPCH/P, such as SF, number of channels, etc., are transmitted on the Broadcast channel.

4.3.1.6 Physical Random Access Channel: PRACH/P

The PRACH/P carries the RACH/T Transport Channel and is defined on one or more timeslots per every consecutive frame. PRACH/P uses a spreading factor of 16 or 8. All

Table 4.3 Code Groups and Cell Parameters

Code Group	Cell Parameter	Associated Codes		
		Scrambling Code	Long Basic Midamble Code	Short Basic Midamble Code
	0	Code 0	mPL0	mSL0
	1	Code 1	mPL1	mSL1
Group 0	2	Code 2	mPL2	mSL2
	3	Code 3	mPL3	mSL3
	4	Code 4	mPL4	mSL4
Group 1	5	Code 5	mPL5	mSL5
	6	Code 6	mPL6	mSL6
	7	Code 7	mPL7	mSL7

UEs will use the PRACH/P for UL communication with UTRAN when they do not have a dedicated channelization code assigned, such as during initial access to UTRAN. This results in the possibility of collision (i.e. multiple UEs using the same PRACH/P at the same time). For this reason, a set of admissible channelization codes on the PRACH/P is specified, from which the UE randomly selects a code. The random selection is used to minimize the possibility of collision. The midamble is determined through a fixed association between the midamble and the channelization code [7]. The available midambles for PRACH/P are from the long midamble set, using either all eight shifts or only the four odd shifts from $k = 1$ to 8. Using odd-only shifts is intended for larger cells; whereby using only half of the available midamble shifts allows for double-length channel responses. For larger cells, the effective number of available midamble shifts can be doubled from four to eight by using a second basic midamble sequence, which is a time 'inverted' or reverse version of the original basic midamble sequence.

Since Random Access is used for initial access to UTRAN, the UE does not have tight time synchronization with the UTRAN. For this reason, PRACH/P uses Type-3 bursts, which have the larger guard period of 192 chips. This reduces the probability of the PRACH/P transmission spilling into an adjacent timeslot. Power Control is not used on the PRACH/P channel.

Each PRACH/P can be split into N-subchannels, with the i-th subchannel using the frames with $i = \text{SFN mod } N$, with possible values of N being 1, 2, 4 or 8. The purpose of the subchannels is to reduce probability of collision, by offering more opportunities for random transmissions.

Multiple PRACH/Ps may be configured on the same or different timeslots. If they are on different timeslots, then each PRACH/P may use the channelization codes and subchannels without any restrictions. However, if they are on the same timeslot, then each PRACH/P must use distinct subsets of channelization codes and sub-channels. From a service point of view, the Random Access Channel is partitioned into a number of Access Service Classes (ASCs), each having a relative priority level. For example, high priority ASCs are assigned for Emergency Calls as well as for Network Operator personnel, etc. Each ASC is mapped onto one or more PRACH/P subchannels and a set of associated channelization codes.

The details of the PRACH/PC (Timeslot, channelization code list, midamble type, sub-channels, ASCs, etc.) are transmitted by the UTRAN on the broadcast channel. Physical Uplink and Downlink Shared Channels: PUSCH/P and PDSCH/P. As the name indicates, Physical Uplink and Downlink Shared Channels are common channels on which several users may send and receive data.

Higher layer signaling is used to indicate to the UE that there is data to decode on the shared channels. PDSCH/P and PUSCH/P use the same burst structure of PDCH/P as described in Section 4.3.1.2.

4.3.1.7 Physical Paging Indicator Channel: PICH/P

The Physical Paging Indicator Channel (PICH/P) is a physical channel used to carry the paging indicators. The PICH/P is always transmitted at a power level that is broadcast in system information (specified as an offset from the PCCPCH/P reference power level).

A Paging Indicator is a sequence of L_{PI} symbols, which indicates to a UE whether or not Paging Information is present in the following occurrence of the Paging (transport) channel (PCH/T). L_{PI} is either 2, 4 or 8 symbols. A single Paging Indicator is assigned to a group of the UEs based on IMSIs (International Mobile Subscriber Identity). This increases the system's paging capacity but will sometimes cause UEs to decode the PCH/T when they have not been paged.

Bursts of Type-1 or Type-2 are used to carry Paging Indicators. With a spreading factor of 16 and with 4 bits being reserved, the number of bits available for Paging Indicators (NPIB) is 240 for Type-1 and 272 for Type-2 bursts, see Figure 4.8.

Accordingly, the number of Paging Indicators per Burst, N_{PI}, is easily determined to be as shown in Table 4.4.

A number of PICH Bursts (N_{PICH}), with one burst per timeslot per frame, form a PICH Block, as shown in Figure 4.9.

Thus, the total number of Paging Indicators per PICH Block N_P is $N_{PICH}{}^{*}N_{PI}$.

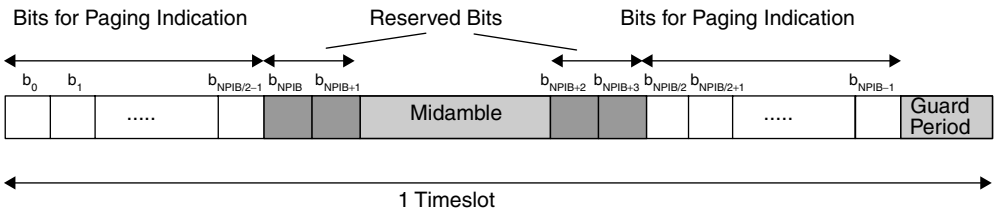

Figure 4.8 Paging Indicators in a PICH Burst

Table 4.4 Number of Paging Indicators per Burst

	$L_{PI} = 2$	$L_{PI} = 4$	$L_{PI} = 8$
Burst Type 1	$N_{PI} = 60$	$N_{PI} = 30$	$N_{PI} = 15$
Burst Type 2	$N_{PI} = 68$	$N_{PI} = 34$	$N_{PI} = 17$

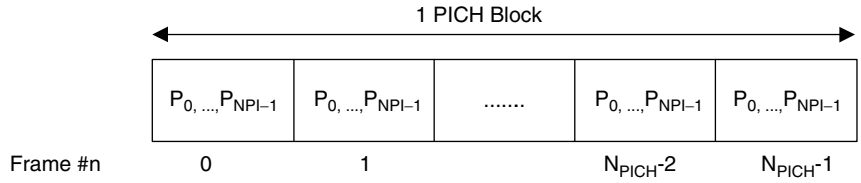

Figure 4.9 Structure of a PICH/P Block

PICH data does not use the channel coding, rate matching or interleaving used by other transport channel types. PICH data is in effect repetition-coded (L_{PI} times) and interleaved between the first and second data fields.

4.3.2 Transport Channels

As explained in Section 4.1, Transport Channels are the services that the Physical Layer provides to Layer 2. Transport Channels are characterized by *how* data is transferred, in terms of the size of the data block, the periodicity of the data blocks, the type of error protection, etc. A Transport Channel is a very flexible concept that allows a variety of channels with very different characteristics to be realized.

The definition of a Transport Channel is based on the concepts of Transmission Time Interval and Transport Format as follows. Briefly, a Transport Channel consists of a sequence of time periods, called Transmission Time Intervals (TTIs). Data in a TTI consists of one or more 'Transport Blocks', carrying equal number of bits. The data is characterized by a 'Transport Format (TF)', which specifies the number of Transport Blocks, the number of data bits per Transport Block and the duration of the TTI itself. The Transport Format also specifies other parameters, as described below.

The TTI can be either 10, 20, 40 or 80 msecs. The number of TBs in a TTI can be 0 through 512, with 0 TBs denoting that no data is transported within that TTI. The maximum number of bits in a TB is 5000. Additional so-called semi-static TB attributes are:

1. Coding Scheme (Convolutional Rate 1/2 or Convolutional Rate 1/3 or Turbo or No-coding).
2. Number of CRC bits (0, 8, 12, 16, 24).
3. Rate Matching parameter (integer from 1 to 256). The Rate Matching parameter puts limits on the number of error-coded bits that may be punctured (or deleted) in the process of mapping the data from multiple transport channels onto a CCTrCH. If the RM parameter is higher for one TrCH than for another, the one with the higher RM parameter would be given more of the output bits and, therefore less puncturing would be performed on that TrCH. If there is only one TrCH in the CCTrCH, the RM parameter has no effect.

TB size (bits), number of TBs and TTI, which effectively determine the Layer 2 to Layer 1 data rate, can be 'changed' on a TTI basis. That is, the following so-called 'dynamic'

attributes can have multiple values, one of which is selected or in effect for any particular TTI: (1) transport block size; (2) number of transport blocks per TTI; and (3) TTI. These parameters are changed by the MAC, which performs TFC selection, based on a number of factors such as data available from each logical channel and logical channel priority.

The other TrCH parameters are referred to as semi-static parameters. TTI can be either a dynamic or a semi-static parameter. These parameters require higher layer signaling. All the attributes characterizing a TrCH can be changed on a slow basis by reconfiguration.

The set of possible TFs for a Transport Channel is called a Transport Format Set (TFS) and each TF within the TFS is known by a unique Transport Format Indicator (TFI).

Example:	TFS = {TF1, TF2, TF3}
TF1:	Dynamic part: {TB size = 320 bits, No. of TBs = 1};
	Semi-static part: {TTI = 10 ms, Coding = Convolutional, Coding Rate = 1/2; Static rate matching parameter = 2}.
TF2:	Dynamic part: {TB size = 320 bits, No. of TBs = 2};
Semi-static part:	{TTI = 10 ms, Coding = Convolutional, Coding Rate = 1/2; Static rate matching parameter = 2}.
TF3:	Dynamic part: {TB size = 480 bits, No. of TBs = 3};
Semi-static part:	{TTI = 10 ms, Coding = Convolutional, Coding Rate = 1/2; Static rate matching parameter = 2}.

Specific Realization in time: (TF1, TF3, TF2) is shown in Figure 4.10.

Coded Composite Transport Channel (CCTrCH): Multiple Transport Channels with different error protection requirements (which are driven by the Quality of Service requirements) can be multiplexed to form a Coded Composite Transport Channel (CCTrCH). This can save physical resources by sharing them among multiple transport channels. The parameters of the individual TrCHs (number of bits after error coding + rate matching) must be such that their mapping onto the allocated Physical Channels is possible.

The structure of the Coded Composite Transport Channels is based on the concept of Transport Format Combination (TFC), which is introduced via an example. For example, consider 3 Transport Channels (TrCH1, TrCH2 and TrCh3) being combined to form a single CCTrCH. Let the associated Transport Format Sets be TFS1 = {TF1, TF2}, TFS2 = {TF1} and TFS3 = {TF1, TF2, TF3}, where TF1, TF2 and TF3 are as defined in the previous example. A 'Transport Format Combination' refers to allowed combinations of Transport Formats for the three channels. For example, TFC1 = {TrCH1 =

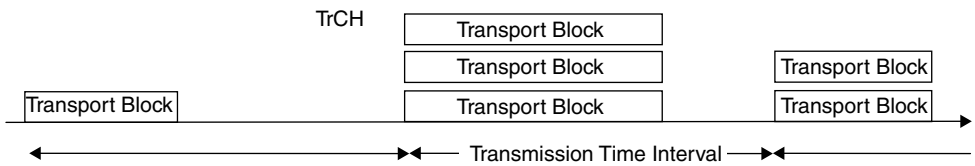

Figure 4.10 Example of a Transport Channel

TF1, TrCH2 = TF1, TrCH3 = TF1}, TFC2 = {TrCH1 = TF2, TrCH2 = TF1, TrCH3 = TF2} and TFC3 = {TrCH1 = TF1, TrCH2 = TF1, TrCH3 = TF3}. Note that the number of allowed TFCs (3) is smaller than the total number of theoretical TF combinations (6).

The CCTrCH is now defined by a set of allowed TFCs, i.e. CCTrCH: TFCS = {TFC1, TFC2, TFC3}. An example realization in time is shown in Figure 4.11.

The Transport Format Combination present in a specific radio frame is denoted by a group of bits TFC Indicator (TFCI), first introduced in Section 3.2.1. This is a key field of data for the receiver, as it indicates what Transport Blocks to look for in the radio frame.

4.3.2.1 Transport Channel Types

TDD radio interface defines a number of Transport Channels, which may be classified into two groups:

- Common Transport channels (where the transport channel is common to several UEs, which may be explicitly addressed for data transfer to a particular UE).
- Dedicated Transport channels (where the transport channel, i.e. TFCS, Coding, TTI, etc., is dedicated to a particular UE).

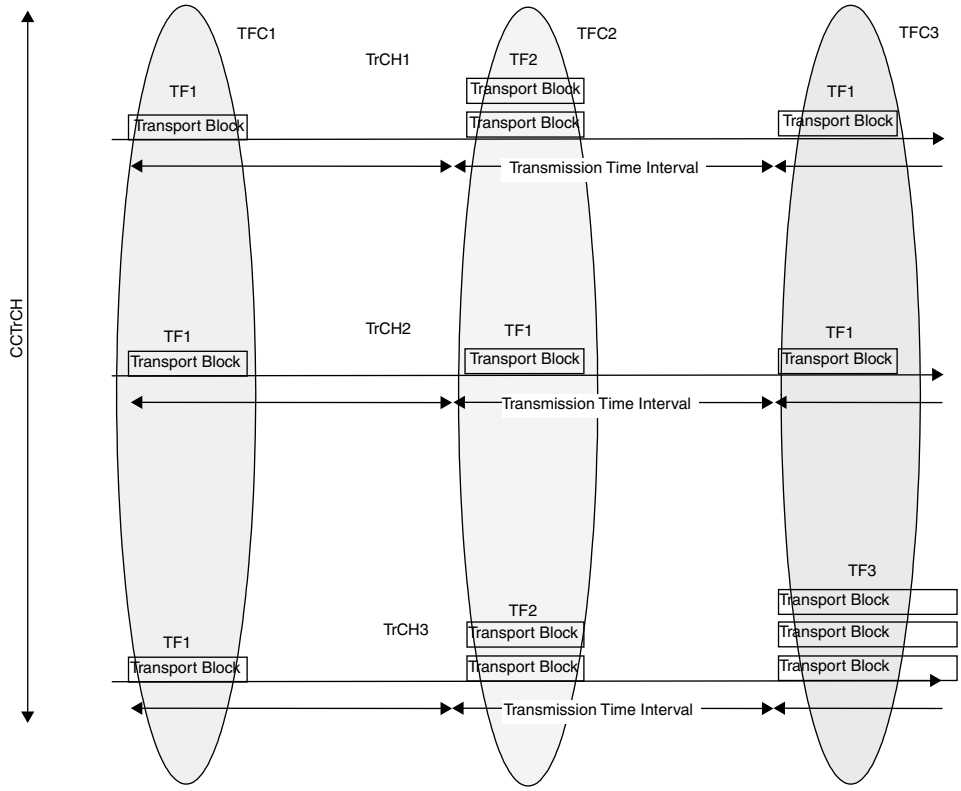

Figure 4.11 Example of a CCTrCH

There are six types of **Common Transport channel types** in TDD – RACH/T, FACH/T, DSCH/T, USCH/T, BCH/T, PCH/T:

- **The Random Access Channel (RACH/T) is a** contention-based uplink channel used for transmission of signaling messages and relatively small amounts of data, e.g. for initial access or non-real-time dedicated control or traffic data. The TTI for RACH/T channel is fixed at 10 msecs, whereas the Transport Block size, Transport Block Set size, CRC size and rate-matching parameters are not fixed by the standards. However, a CCCH message must be sent in a single RACH burst (Type 3 burst) and in a single Transport Block (TB).
- **The Forward Access Channel (FACH/T) is a** common downlink transport channel used for transmission of signaling messages and relatively small amounts of data. It is used to carry control information to a mobile station when dedicated channels are not assigned or when shared channels are in use. The FACH may also carry small amounts of non-real-time traffic data.
- **The Downlink and Uplink Shared Channels (DSCH/T and USCH/T) are** downlink and uplink channels time shared by several UEs carrying dedicated control and/or traffic data, as per allocations from higher layers.
- **The Broadcast Channel (BCH/T) is a** downlink channel used for broadcast of system and cell information into an entire cell.
- **The Paging Channel (PCH/T)** is a downlink transport channel that is used to carry control information to inactive or idle UEs. It is also used to broadcast notification of change of BCCH information.
- The PCH/T is divided into PCH blocks, each of which comprises of N_{PCH} paging sub-channels. Each paging sub-channel is mapped onto two consecutive PCH frames within one PCH block. To allow an efficient DRX for UE battery savings, Layer 3 information to a particular UE is transmitted only in a paging sub-channel, which is assigned to the UE by higher layers. Figure 4.12 shows PCH blocks, including PICH blocks introduced earlier.

There is only one type of Dedicated transport channel, namely **Dedicated Channel (DCH/T)**, which is a channel dedicated to one UE used in uplink or downlink. The Channel Coding for the Transport Channels is specified in Table 4.5.

When multiplexing transport channels into a CCTrCH, some rules apply [2]. Dedicated transport channels and common transport channels cannot be multiplexed into the same

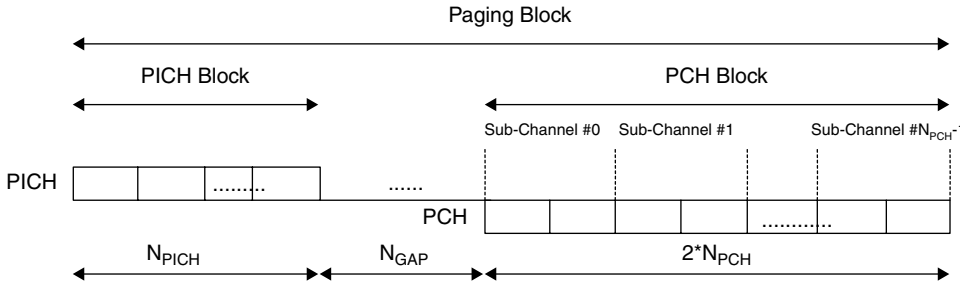

Figure 4.12 Paging Sub-Channels and Association of PICH and PCH blocks

Table 4.5 Channel Coding Scheme

Type of Transport Channel	Coding Scheme	Coding Rate
BCH/T		
PCH/T	Convolutional coding	1/2
RACH/T		
		1/3, 1/2
DCH/T, DSCH/T, FACH/T, USCH/T	Turbo coding	1/3
	No coding	

CCTrCH, since they are mapped onto different physical channels. Moreover, not all combinations of transport channels can be used [8]. The allowed combinations are: several uplink DCH/Ts; several downlink DCH/Ts; several USCH/Ts; several DSCH/Ts; one or more FACH/Ts; a PCH/T and one or more FACH/Ts. RACH/T and BCH/T cannot be combined with other transport channels.

4.4 LAYER 1 COMMUNICATION

4.4.1 Layer 1 Processing

Layer 1 of the UE and the UTRAN communicate with each other by exchanging Transport Blocks (TB), which are delivered to/from Layer 2 once every Transmission Time Interval (10, 20, 40 or 80 ms). Figure 4.13 depicts how these Transport Blocks arising from two Transport Channels are processed and multiplexed into a single CCTrCH and then mapped to a Physical Channel [2, Section 4.2]. A common example is the mapping of DTCH/L:DCH/T and DCCH/L:DCH/T onto a single DPCH/P.

Let Layer 2 submit on Transport Channel #1 a number ($W \geq 1$) of Transport Blocks with A bits each. Transport Blocks are first block coded by appending a CRC (24, 16, 12, 8 or 0 bits) and then serially concatenated. If necessary, padding bits are appended, so that the total number of bits is the minimum integer ($X \geq 1$) multiple of the length (B) of a so-called 'Code Block'. The resulting bits are then segmented to produce X Code Blocks. B depends upon the type of Channel Coding that is to be performed subsequently: $B \leq 504$ bits for Convolutional Coding, ≤ 5114 for Turbo Coding and Unlimited for 'No-Coding'.

Each of these Code Blocks is now 'channel coded' as per Table 4.5, using either Convolutional Coding, Turbo Coding or 'No-Coding', to produce X 'Channel Blocks' of size C bits each. The total number of channel coded bits is XC.

Since these bits have to be transmitted within an integer number of frames ($F = TTI/10 = 1, 2, 4$ or 8), it may be necessary to pad extra bits, so that the number of bits, say D, is an integer multiple of F. That is, $D = N * F$, where N is an integer, equaling the number of bits to be transmitted per Radio Frame.

These D bits are now interleaved by first writing row-wise the data into a matrix with F columns, permuting the columns and then reading out data column-wise. See Chapter 3 for the concept and TS 25.222 [2] for details.

Similarly, Transport Channel #2 is processed to produce an integer number of Radio Segments. The Radio Segments from Transport Channels 1 and 2 are and multiplexed to

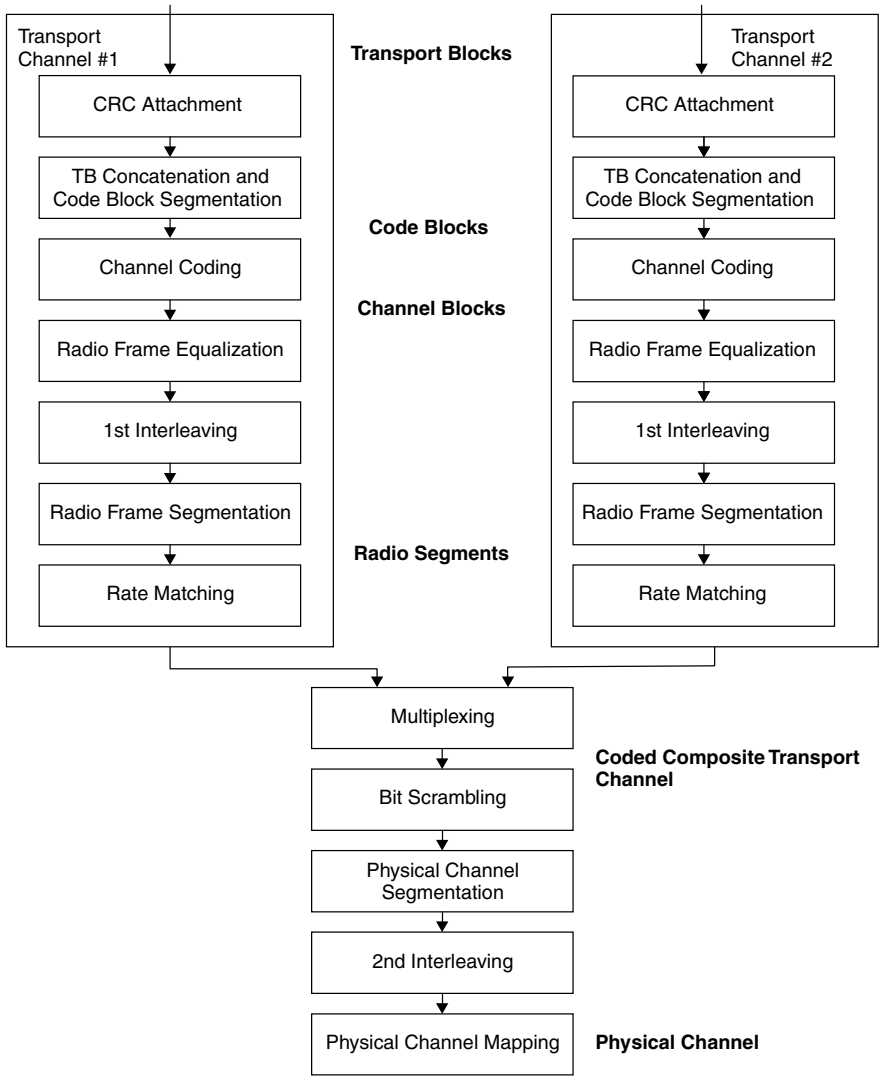

Figure 4.13 Peer-to-Peer Communication of a Transport Block Set by Layer 1

form a Coded Composite Transport Channel, which is then mapped onto one or more Physical Channels. However, prior to multiplexing, the Radio Segments are 'Rate Matched', so that the multiplexed Radio Segments fit exactly into the physical resources allocated. The principle of Rate Matching is now explained.

Let the physical channel resources allocated to the CCTrCH under consideration carry a total number (Ndata) of bits. The Rate Matching parameter, associated with each transport channel, specifies its relative share of bits among the Ndata bits. Let the share of the i-th TrCH be {Ndata(i) per Radio Segment}. The number of bits (E) in the Radio Segment of each TrCH are now either punctured or repeated to equal Ndata(i). This process is called Rate Matching among the constituent TrCHs of a CCTrCH.

Note that puncturing 'some' bits in each Radio Segment is acceptable, thanks to the error-correcting capability provided by the channel coding. However, puncturing does degrade the performance, so that limits are set by higher layers to the number of bits that can be punctured based on quality of service requirements.

Another reason for 'Rate Matching' is to minimize or maintain the number of physical channels used when the number of data bits in a Transport Block changes in time.

The multiplexed Radio Segments of the CCTrCH are now scrambled using a locally generated bit stream, defined by standards. In case more than one physical channel is used (e.g. two channelization codes with SF 16 in a timeslot), the scrambled bits are segmented for transmission on each physical channel.

These bits are now interleaved for a second time, which is also a block interleaver as in the first case. That is, the input bits are read into a data matrix row-wise (some padding bits may be needed here), columns permuted and output bits are read out column-wise (the padded bits are pruned here). The selection of the second interleaving scheme is controlled by higher layers. Finally, these bits are mapped into the radio bursts of the allocated physical channels, after appropriate spreading.

Figure 4.14 illustrates a service example, with 64 kbps DL data and associated dedicated in-band signaling at 2.5 kbps (both rates measured at the Transport Channel SAP between the MAC and PHY layers).

Specifically, data arrives at the transport channel DCH/T in Transport Blocks of size 1280 bits within a TTI of 20 ms (yielding $1280/20 = 64$ kbps data rate). The in-band signaling data arrives at a different transport channel DCH/T in Transport Blocks of size 100 bits within a TTI of 40 ms (yielding $100/20 = 2.5$ kbps rate). Both these transport channels are to be multiplexed into 5 physical channels, where each physical channel is characterized by a single timeslot supporting 5 channelization codes with $SF = 16$ and radio burst Type-1 (i.e. Midamble 512 chips). 16 bits are used per timeslot for TFCI.

Since the TTIs of the two Transport Channels to be multiplexed are different, the multiplexing has to be performed over the larger TTI, namely 40 ms, which contains two Transport Blocks of Traffic Data and one Transport Block of Signaling Data. Each of the Traffic Data Transport Blocks is CRC coded with 16 CRC bits, and further coded with Rate 1/3 Turbo Code, which increases the size 3- fold. 12 Trellis termination bits are added and interleaved. The resulting 3900 bits are split into two radio segments, so that they may be transmitted over two radio frames.

Similarly, the Signaling Data Transport Block is CRC coded with 12 CRC bits, and Convolutionally coded with Rate 1/2 and 8 Trellis Coding bits. The resulting 240 bits are interleaved.

The Radio Segments corresponding to the Traffic and Signaling Data are now punctured as shown in order to produce four 1204 bit blocks, which are then interleaved a second time and packed into five radio bursts (multicode transmission) after inserting TCFI fields.

4.4.2 Inter-Layer Communication

The Physical Layer interfaces with the Medium Access Control (MAC) sublayer of Layer 2 and the Radio Resource Control (RRC) sublayer of Layer 3 as depicted in Figure 4.15.

Communication between the Physical Layer and MAC is performed by means of PHY primitives. The PHY primitives enable the transfer of transport blocks over the radio interface and indicate the status of Layer 1 to Layer 2. Communication between the Physical

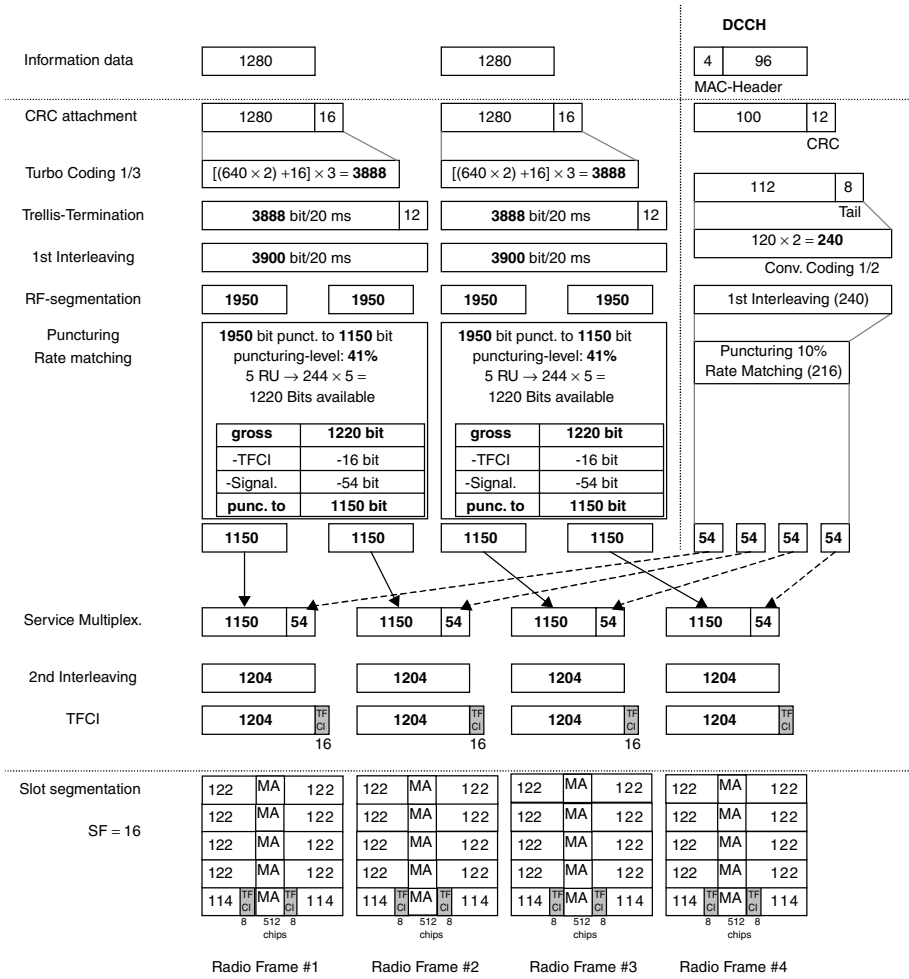

Figure 4.14 Service Example of 64 kbps Traffic and 2.5 kbps Signaling Data

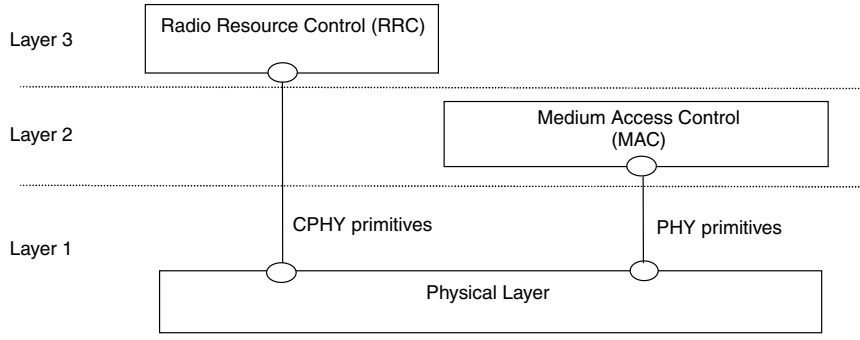

Figure 4.15 Interfaces between Physical and Higher Layers

Layer and RRC is performed by means of CPHY primitives. The CPHY primitives enable the control of the configuration of the Physical Layer. Since these primitives are only for internal communications between layers in the UE or the Network, they are not subject to standardization and are vendor dependent. As such, what follows should be considered as examples only.

The PHY primitives include primitives to request and to indicate the receipt of Layer 1 SDUs respectively and are submitted every TTI for each Transport Channel.

There are two classes of CPHY primitives, namely Status primitives and Control primitives. Among the Status primitives are the Synchronization primitives, which indicate to the RRC that the Layer 1 synchronization is achieved or lost. The Measurement primitives enable RRC to request measurements and the Physical Layer to report measurements. For UE, these primitives specify measurements such as: PCCPCH RSCP (Received Signal Code Power), Timeslot ISCP, SIR (Signal to Interference Ratio), Carrier RSSI (Received Signal Strength Indicator), Transport Channel BLER (Block Error Rate), Transmitted Power, etc. For the UTRAN, the measurement parameters include: Received Total Wideband Power, Transmitted Carrier Power, Transmitted Code Power, Transport Channel BER, Rx Timing Deviation, Timeslot ISCP, RSCP, Round Trip time, SIR, PRACH/P Propagation Delay, etc. The CPHY Control primitives include those for setting up/releasing Transport Channels, and Radio Links.

4.5 LAYER 2 STRUCTURE

As shown in Figure 4.3, the structure of Layer 2 (Radio Link Layer) consists of a number of protocol entities, namely MAC, RLC, PDCP, and BMC. Furthermore, Layer 2 provides Services to Layer 3 via Radio Bearers. The intermediate Service Access Points between the MAC and RLC protocol entities are referred to as Logical Channels.

4.5.1 Logical Channels

Logical Channels are classified according to the type of information that is transferred. The set of Logical Channel types is listed in Table 4.1, and they are briefly described here.

The first group of Logical Channels is Control channels, which are used for transfer of control plane information only:

- **The Broadcast Control Channel (BCCH/L)** is a downlink channel for broadcasting system control information.
- **The Paging Control Channel (PCCH/L)** is a downlink channel that transfers paging information. This channel is used when the network does not know the location cell of the UE, or when the network knows the location cell of the UE but the UE does not have a signaling connection to the network. (Specifically, the Paging Control Channel is used when the UE is in the CELL_PCH or URA_PCH state of RRC connected mode or UE is in RRC idle mode. These are described later in Section 4.7.1.)
- **The Common Control Channel (CCCH/L)** is a bi-directional channel for transmitting control information between the network and UEs. This channel is commonly used by the UEs having no RRC connection with the network and by the UEs when accessing a new cell after cell reselection.

- **The Dedicated Control Channel (DCCH/L)** is a point-to-point bi-directional channel that transmits dedicated control information between a UE and the network. This channel is established through RRC connection set-up procedure.
- **The Shared Channel Control Channel (SHCCH/L)** is a bi-directional channel that transmits control information for uplink and downlink shared channels between network and UEs.

The second group of Logical Channels is Traffic Channels, which are used for the transfer of user plane information only:

- **Dedicated Traffic Channel (DTCH/L)** is a point-to-point channel, dedicated to one UE, for the transfer of user information. A DTCH can exist in both uplink and downlink.
- **Common Traffic Channel (CTCH/L)** The Common Traffic Channel (CTCH/L) is a point-to-multipoint unidirectional channel for transfer of dedicated user information for all or a group of specified UEs. It is used primarily for sending Broadcast and Multicast information.

While the information carried by each of above logical channels is self-evident, the information carried by the Broadcast Channel deserves elaboration. The Broadcast Logical Channel carries critical system information that is needed by the UEs, the details of which are included in Appendix 4.1.

4.5.2 Radio Bearers

Radio Bearer is a service abstraction between Layer 3 and Layer 2. It represents a data stream provided by the RLC layer for transfer of user data between User Equipment and Serving RNC. A Radio Bearer is specified by the RLC, PDCP and MAC information as well as information about mapping the RB to Logical and Transport Channels as follows [6, Sections 10.3.4.16–10.3.4.24]:

- RLC Size and Mode (AM/UM/TM)
- PDCP Information
- Logical Channel Identity
- MAC Logical Channel Priority
- Transport Channel Type and Identity
- Transport Format Parameters.

The RLC modes AM/UM/TM refer to Acknowledged Mode/Unacknowledged Mode/Transparent Mode and are further described in Section 4.6.2. A Radio Bearer is identified by a number from 0–31 [6]. Radio Bearers RB0 through RB3 (and optionally RB4) are used for RRC Signaling Messages and hence are referred as Signaling Radio Bearers. Their typical use is as follows:

- Signaling Radio Bearer RB0 is used for all messages sent on the CCCH/L with RLC-TM for Uplink and RLC-UM for Downlink.

- Signaling Radio Bearer RB1 is used for all messages sent on the DCCH/L, with RLC-UM.
- Signaling Radio Bearer RB2 is used for all messages sent on the DCCH/L, with RLC-AM, except for the RRC messages carrying higher layer (NAS) signaling. These messages are carried using Signaling Radio Bearer RB3 (and optionally Signaling Radio Bearer RB4) with RLC-AM.

The UE and UTRAN select which Signaling Radio Bearer to use according to the message type to be sent and the type of Logical Channel (DCCH/L or CCCH/L). For example, RB0 is used by the UE in idle mode to send an 'RRC Connection Request'. In connected mode, the UE uses RB1, RB2 or RB3, with the exception of the RRC messages 'Cell Update' and 'URA Update', which are sent in RB0 (CCCH). (These RRC messages are explained further in Section 4.7.1).

4.6 LAYER 2 COMMUNICATION

First, we recall the notions of Protocol Data Units (PDUs) and Service Data Units (SDUs). The term PDU refers to the block of data exchanged between peer protocol entities. It is also a block of data exchanged between adjacent protocol entities in a protocol stack. The term SDU refers to the block of data serviced internally by a protocol entity, see Figure 4.16.

4.6.1 Medium Access Control (MAC) Protocol

4.6.1.1 MAC Architecture

The MAC layer controls the mapping of various Logical Channels onto Transport Channels. Depending on the type of Transport Channel being controlled, three types of MAC protocol entities are identified. They are termed MAC-d, MAC-c/sh and MAC-b for Dedicated, Common/Shared and Broadcast Transport Channels respectively. The

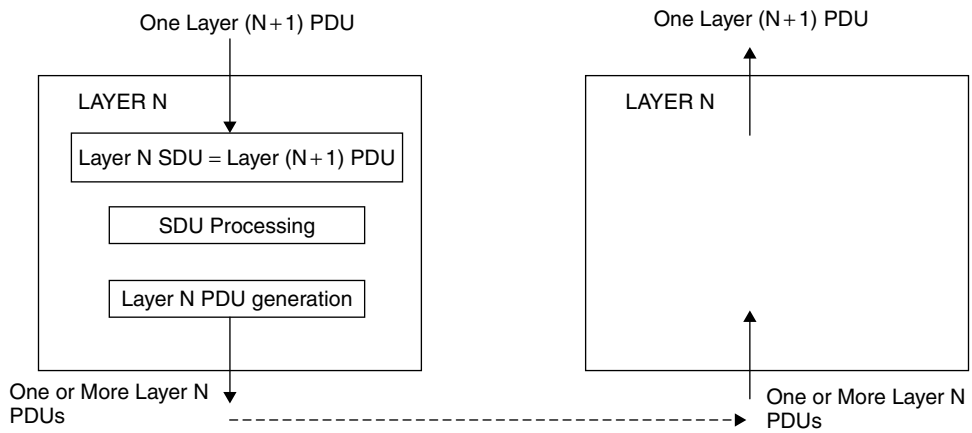

Figure 4.16 Illustration of PDU, SDU Concepts

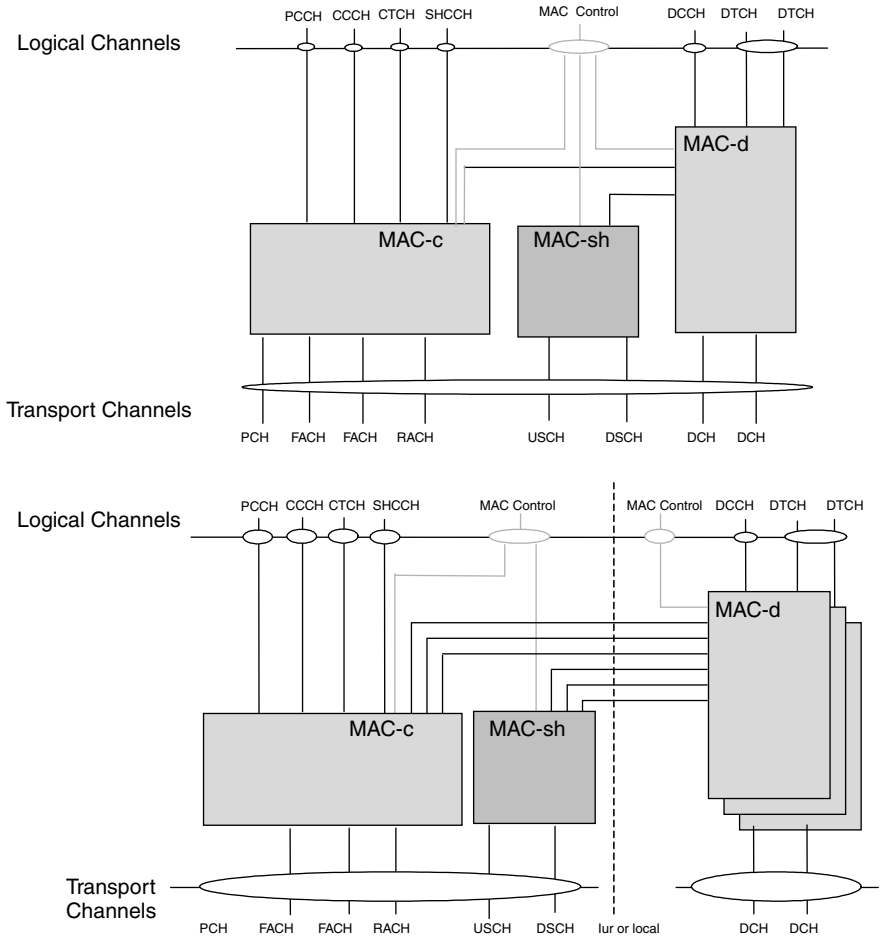

Figure 4.17 MAC Architecture: UE (top) and RNC (bottom)

Common/Shared Transport Channels include PCH/T, FACH/T, RACH/T, DSCH/T and USCH/T. Figure 4.17 depicts the architecture for MAC-d and MAC-c/sh in the UE and in the RNC. Observe that there are multiple Dedicated MAC protocol entities at the RNC, each instance corresponding to a particular UE.

4.6.1.2 MAC Services and Functions

MAC Services to upper layers are:

1. Data transfer: Two Peer MAC entities communicate by exchanging MAC PDUs in a transparent manner. (That is, there is no error correction, no retransmissions, etc. These are services provided by higher (sub-)layers.)
2. Reallocation of radio resources and MAC parameters: This service performs the execution of radio resource reallocation at the request of the RRC protocol and change

of MAC parameters, such as transport format (combination) sets, transport channel type, etc.
3. Reporting of measurements: Local measurements such as traffic volume and quality indication are reported to the RRC protocol.

The MAC protocol provides the above services by implementing the following 'MAC Functions':

1. Mapping between Logical Channels and Transport Channels: The MAC is responsible for mapping of Logical Channel(s) onto the appropriate Transport Channel(s).
2. Selection of appropriate Transport Format for each Transport Channel depending on instantaneous source rate: Given the Transport Format Combination Set assigned by RRC, MAC selects the appropriate transport format for each active transport channel depending on the source rate. The control of transport formats ensures efficient use of transport channels.
3. Priority handling between data flows of one UE: When selecting between the Transport Format Combinations in the given Transport Format Combination Set, priorities of the data flows to be mapped onto the corresponding Transport Channels can be taken into account. Priorities may be given based on the attributes of Radio Bearer services and RLC buffer status.
4. Priority handling between UEs by means of dynamic scheduling: In order to utilize the spectrum resources efficiently for bursty data, a dynamic scheduling function may be applied. This is done by MAC priority handling on common and shared Transport Channels. For dedicated Transport Channels, a dynamic scheduling function is implicitly included as part of the reconfiguration function of the RRC protocol.
5. Identification of UEs on common transport channels: When a particular UE is addressed on a common downlink channel, or when a UE is using the RACH/T, there is a need for inband identification of the UE. Since the MAC layer handles the access to, and multiplexing onto, the Transport Channels, the identification functionality is naturally also placed in MAC.
6. Multiplexing/demultiplexing of upper layer PDUs into/from transport blocks delivered to/from common/dedicated Transport Channels.
7. Traffic volume measurement: MAC layer measures the traffic volume on logical channels and reports to RRC protocol. Based on the reported traffic volume information, RRC performs transport channel switching decisions.
8. Ciphering: This function prevents unauthorized acquisition of data. Ciphering is performed in the MAC layer for transparent RLC mode. Details of the security architecture are specified in [4].

Figures 4.18 and 4.19 depict how the MAC/d and MAC/c functions are implemented at the UE and the RNC.

4.6.1.3 MAC Peer-to-Peer Communication

As stated previously, two Peer MAC entities communicate by exchanging MAC PDUs in a transparent manner. (That is, there is no error correction, no retransmissions, etc. These are services provided by higher (sub-)layers.)

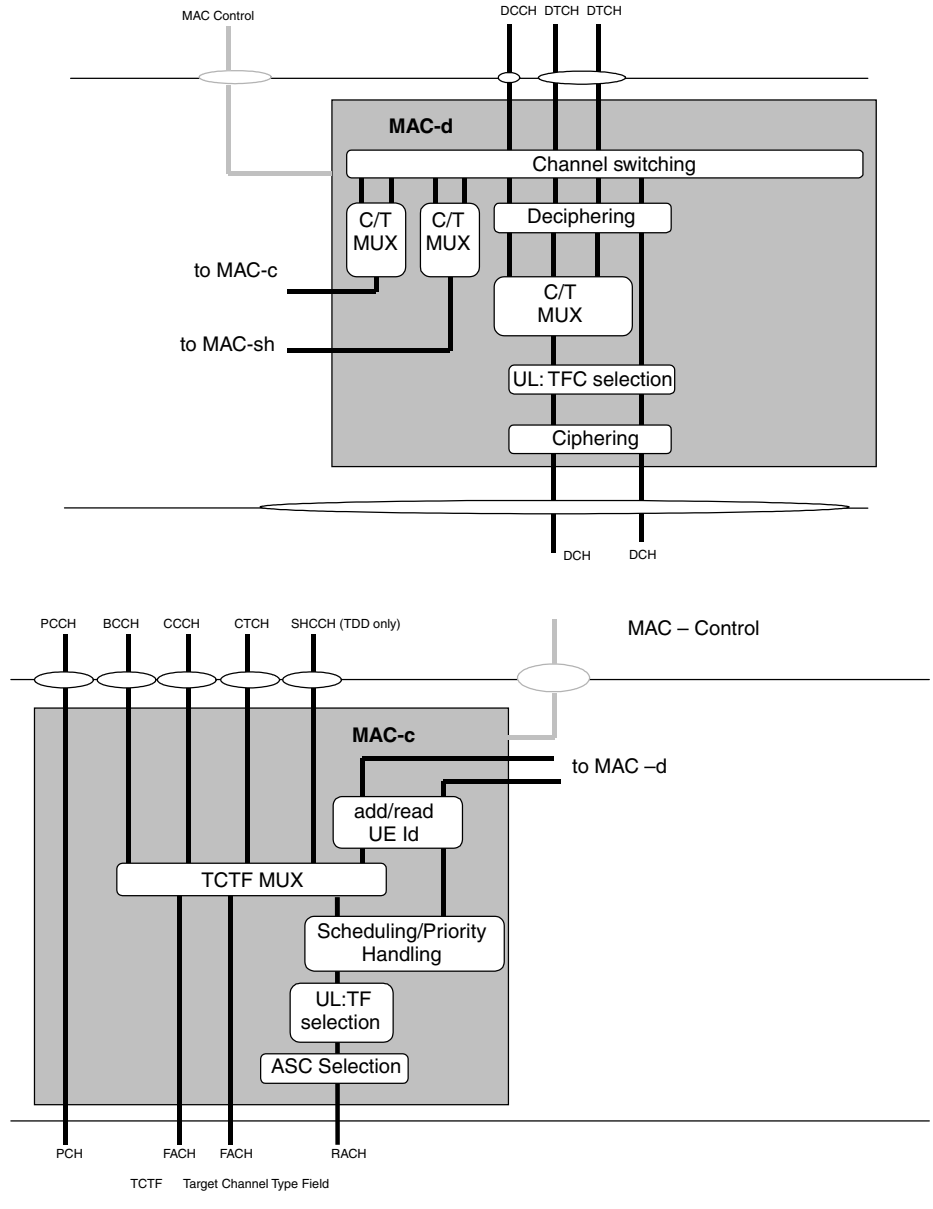

Note: Ciphering is performed in MAC-d only for transparent RLC mode

Figure 4.18 MAC Processing at the UE

In the UE for the uplink, all MAC PDUs delivered to the physical layer within one TTI are defined as a Transport Block Set (TBS). This consists of one or several Transport Blocks, each containing one MAC PDU. The Transport Blocks are transmitted in the order as delivered from RLC. When MAC multiplexes RLC PDUs from different logical channels, the order of the different Logical Channels is set by the MAC protocol priorities.

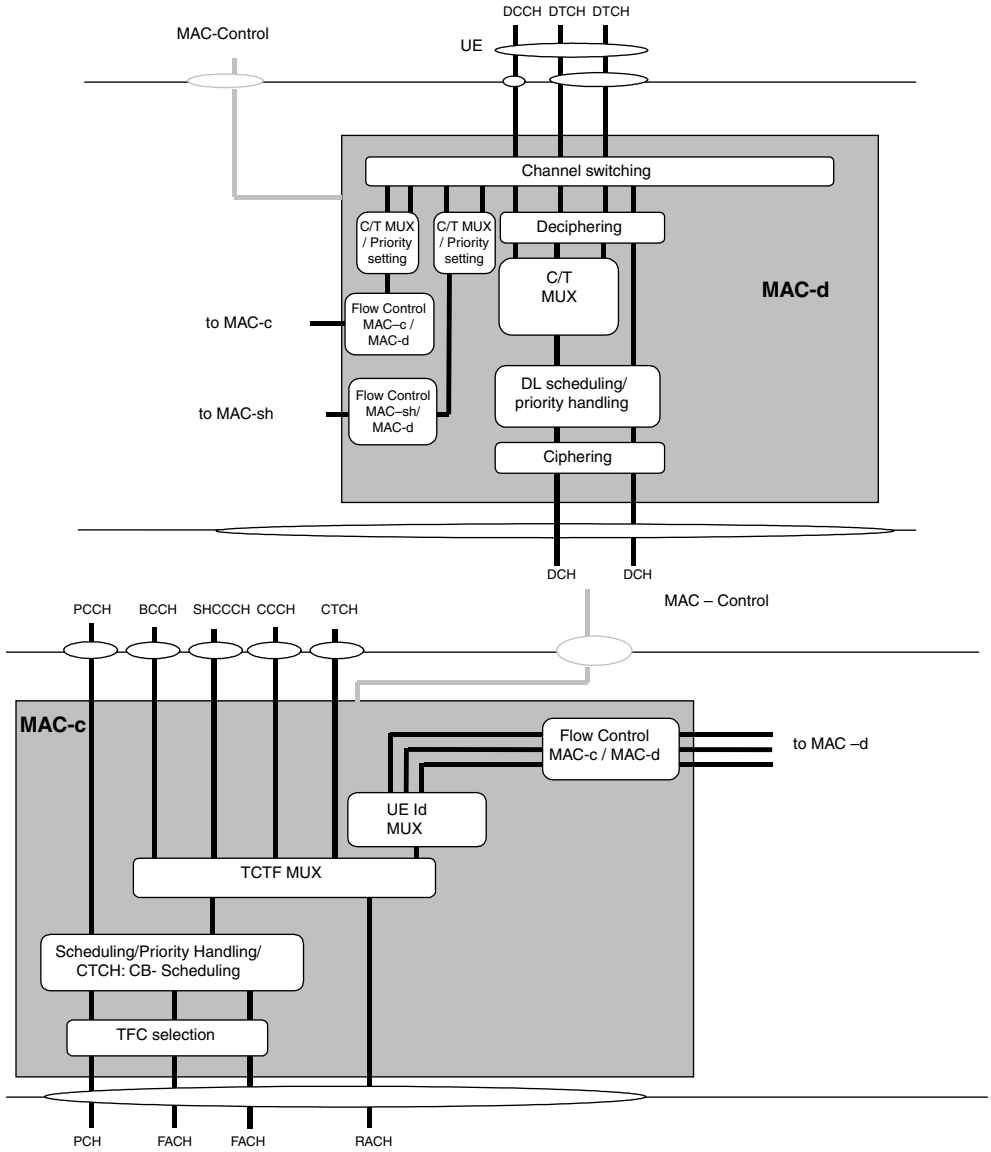

Figure 4.19 MAC Processing at RNC

A MAC PDU consists of an optional MAC header and a MAC Service Data Unit (MAC SDU), as shown in Figure 4.20. Both the MAC header and the MAC SDU are of variable size. The content and the size of the MAC header depend on the type of the Logical Channel, and in some cases none of the parameters in the MAC header are needed. The size of the MAC-SDU depends on the size of the RLC-PDU.

- Target Channel Type field: The TCTF field is a flag that provides identification of the Logical Channel class on FACH/T and RACH/T Transport Channels, i.e. whether it

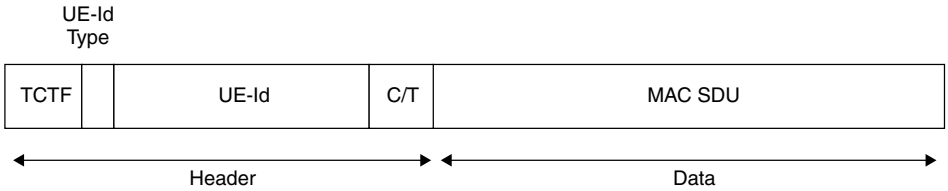

Figure 4.20 MAC PDU

carries BCCH/L, CCCH/L, CTCH/L, SHCCH/L or dedicated Logical Channel information. The size of the TCTF field of FACH/T and RACH/T is 3 or 5 bits and 2 or 4 bits respectively.

- C/T field: The C/T field provides identification of the Logical Channel instance when multiple Logical Channels are carried on the same Transport Channel. The size of the C/T field is fixed to 4 bits, allowing 15 Logical Channels to be distinguished.
- UE-Id: The UE-Id field provides an identifier of the UE on common Transport Channels. The following types of UE-Id are defined:
  - the 32-bit-long UTRAN Radio Network Temporary Identity (U-RNTI);
  - the 16-bit-long Cell Radio Network Temporary Identity (C-RNTI).
- UE-Id Type: The 2 bit UE-Id Type field specifies whether the UE Id is U-RNTI or C-RNTI.

Figure 4.21 below shows some example cases of MAC PDU:

4.6.1.4 MAC Layer-to-Layer Communication

MAC communicates with the upper layers (RLC and RRC) using the so-called 'primitives': (communication with the lower layer is described in the section on Layer 1, namely Section 4.4.2). As stated earlier, these primitives are not subject to standardization and are vendor dependent. The following are examples only, see Figure 4.22.

The RLC layer uses the MAC-DATA primitives to send and receive MAC SDUs'. These primitives specify an RLC-PDU or an RLC message, RLC Buffer Occupancy, which indicates the amount of data available for transmission/retransmission in the RLC layer, Timing Deviation of RACH transmissions, etc.

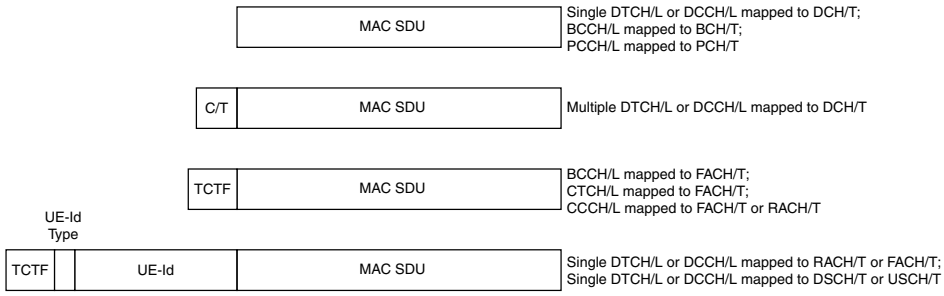

Figure 4.21 Example MAC PDU Formats

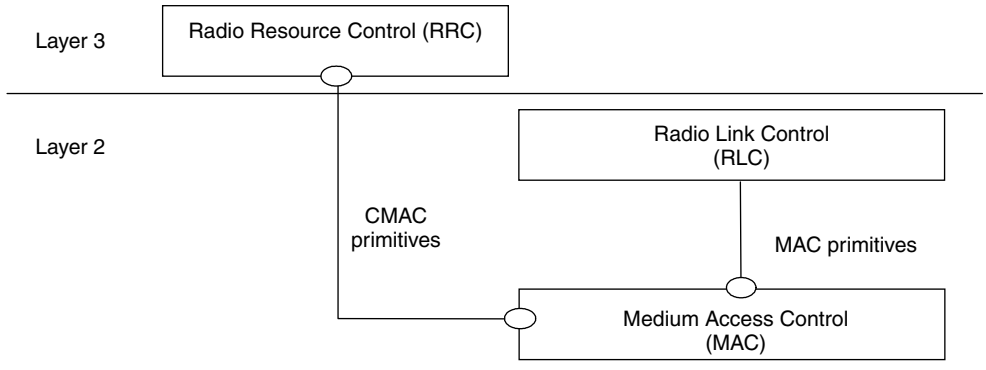

Figure 4.22 MAC Inter-Layer Primitives

RRC uses CMAC-CONFIG primitives to set up, configure and release logical channels. These primitives include UE Information elements, RB information elements (such as Transport Channel Identity, Logical Channel Identity and Logical Channel Priority), Transport Channel Information Elements, RACH/T transmission control elements etc.

Similarly, RRC uses CMAC-MEASUREMENT primitives to manage measurements, such as traffic volume measurements. These primitives specify parameters such as Measurement Mode (Periodic or Event Triggered), Reporting Interval, Trigger Thresholds, Averaging Interval, etc.

4.6.2 Radio Link Control (RLC) Protocol

4.6.2.1 RLC Architecture

The RLC protocol consists of three entities supporting three types of Layer 2 data transfer. They are Transparent Mode (TM), Unacknowledged Mode (UM), and Acknowledged Mode (AM) RLC entities, see Figure 4.23.

Each RLC UM, and TM entity uses one Logical Channel to send or receive data PDUs. An AM RLC entity can be configured to use one or two Logical Channels to send or

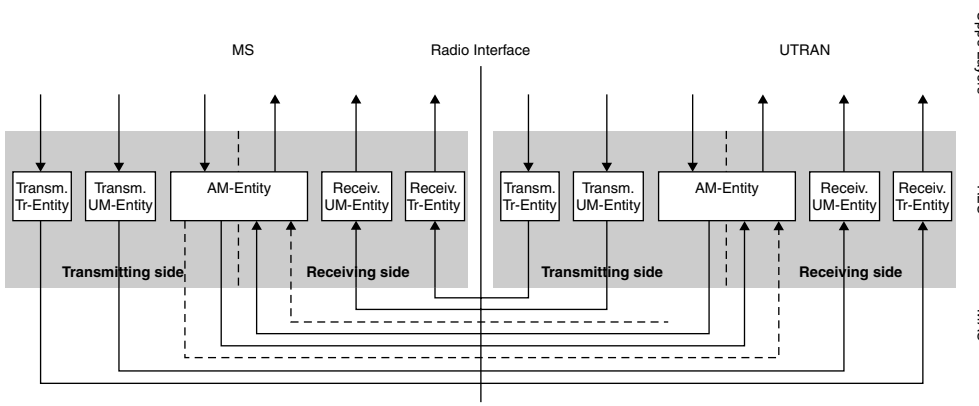

Figure 4.23 RLC Architecture

receive data and control PDUs. If two Logical Channels are configured, they are of the same type (DCCH or DTCH). In Figure 4.23, the dashed lines between the AM entities illustrate the possibility to send and receive RLC PDUs on separate Logical Channels, e.g. control PDUs on one and data PDUs on the other.

4.6.2.2 RLC Services and Functions

The RLC sublayer provides the following services to the upper layers [1]: Data transfer Service in Transparent, Unacknowledged and Acknowledged Modes; Maintenance of QoS as defined by upper layers and Notification of unrecoverable errors. These services are implemented by the following central functions:

- Functions common to TM, UM and AM: Segmentation and reassembly; Transfer of user data; and SDU discard.
- Additional Functions common to UM and AM: Ciphering; Sequence number check.
- Additional Functions exclusive to AM: In-sequence delivery of upper layer PDUs; Duplicate detection; Error correction; Flow Control; Protocol error detection and recovery.

We now provide a brief description of these RLC functions:

1. Segmentation and reassembly: This function performs segmentation/reassembly of variable-length upper layer PDUs into/from smaller RLC PDUs. The RLC PDU size is adjustable to the actual set of transport formats. However, the PDU size is fixed for AM mode.
2. Transfer of user data: This function is used for conveyance of data between users of RLC services, using acknowledged, unacknowledged and transparent data transfer modes. QoS setting controls type of transfer of user data.

The following functions are employed in the transfer of user data:

1. Transparent data transfer: This service transmits RLC PDUs without adding any RLC protocol information (header).
2. Unacknowledged data transfer. This service transmits RLC PDUs with protocol information (header), but does not guarantee delivery to the peer entity. The unacknowledged data transfer mode has the following characteristics:
   (a) Detection of erroneous data: The RLC sublayer delivers only those SDUs to the receiving upper layer that are free of transmission errors by using the sequence-number check function.
   (b) Immediate delivery: The receiving RLC sublayer entity delivers a SDU to the upper layer receiving entity as soon as it arrives at the receiver.
3. Acknowledged data transfer. This service transmits RLC PDUs and guarantees delivery to the peer entity. When the receiving RLC is unable to deliver the data correctly, the RLC at the transmitting side is notified. For this service, both in-sequence and out-of-sequence delivery are supported. In many cases, an upper layer protocol can restore the order of its PDUs. As long as the out-of-sequence properties of the lower layer

are known and controlled, allowing out-of-sequence delivery can save memory space in the receiving RLC. In this case, the upper layer protocol would not immediately request retransmission of a missing PDU. The acknowledged data transfer mode has the following characteristics:

(a) Error-free delivery: Error-free delivery is ensured by means of retransmission. The receiving RLC entity delivers only error-free SDUs to the upper layer.
(b) Unique delivery: The RLC sublayer delivers each SDU only once to the receiving upper layer using duplication detection function.
(c) In-sequence delivery: RLC sublayer provides support for in-order delivery of SDUs, i.e. RLC sublayer delivers SDUs to the receiving upper layer entity in the same order as the transmitting upper layer entity submits them to the RLC sublayer.
(d) Out-of-sequence delivery: As an alternative to in-sequence delivery, RLC entity may also deliver SDUs to the upper layer in different order than submitted to RLC sublayer at the transmitting side.

4. Notification of unrecoverable errors. RLC notifies the upper layer of errors that cannot be resolved by RLC itself within the maximum allowed retransmissions, subject to delay requirements.
5. Flow control: This function allows an RLC receiver to control the rate at which the peer RLC transmitting entity may send information.
6. Ciphering: This function prevents unauthorized acquisition of data. Ciphering is performed in RLC layer for non-transparent RLC mode. Details of the security architecture are specified in [4].

Other functions include Concatenation of successive RLC SDUs, Padding of RLC PDUs, Detection of duplicate RLC PDUs, checking the Sequence Number of RLC PDUs in reassembling an RLC SDU, detection and recovery from RLC protocol failure, etc.

4.6.2.3 RLC Peer-to-Peer Communication

The basic mechanism of Transparent Mode RLC communication is shown in Figure 4.24.

The transmitting TM-RLC entity receives RLC SDUs from upper layers. All received RLC SDUs must be of a length that is a multiple of one of the valid TMD (Transparent Mode Data) PDU lengths used by the lower layer. If an RLC SDU is larger than the TMD PDU size, and segmentation has been configured by upper layers, the transmitting TM RLC entity segments RLC SDUs to fit the TMD PDU size. No RLC headers are added in TM. All the TMD PDUs carrying one RLC SDU are sent in the same TTI, and no segment from another RLC SDU are sent in this TTI. The resulting TMD PDUs are submitted to the lower layer as shown in Figure 4.24.

The receiving TM-RLC entity receives TMD PDUs through the configured logical channels from the lower layer. If segmentation is configured by upper layers, all TMD PDUs received within one TTI are reassembled to form the RLC SDU. If segmentation is not configured by upper layers, each TMD PDU is treated as a RLC SDU. The receiving TM RLC entity delivers RLC SDUs to upper layers through the TM-SAP.

The basic mechanism of Unacknowledged Mode RLC communication is shown in Figure 4.25 The transmitting UM-RLC entity receives RLC SDUs from upper layers through the UM-SAP. If the RLC SDU is larger than the length of available space in the

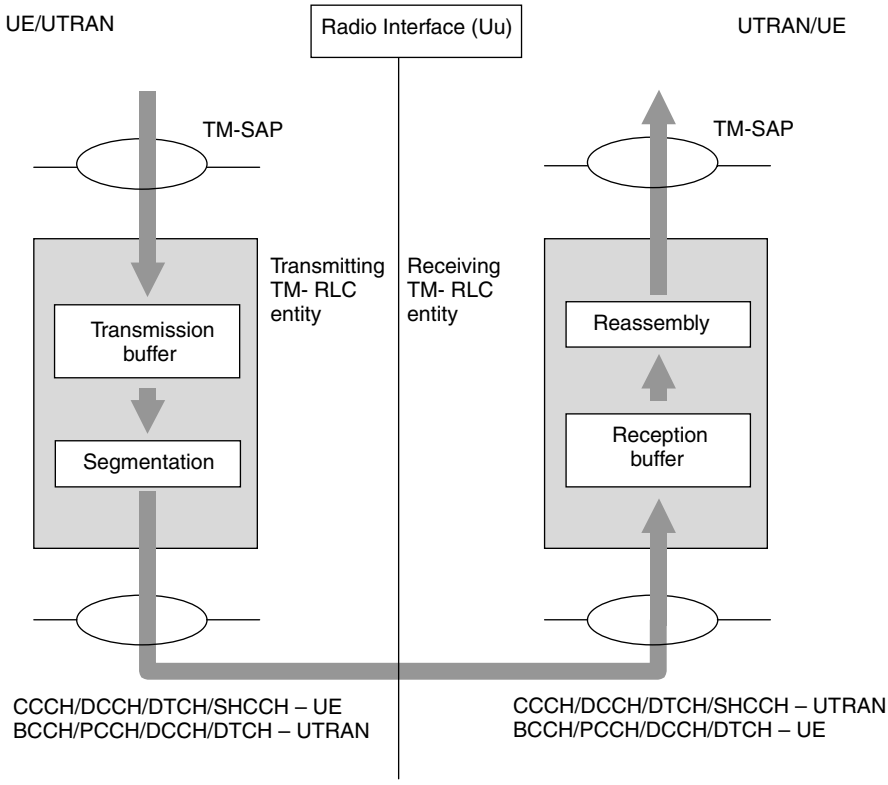

Figure 4.24 Transparent Mode RLC Entity Peer-to-Peer Communication

UMD (Unacknowledged Mode Data) PDU, the transmitting UM RLC entity segments the RLC SDU into UMD PDUs of appropriate size. An RLC header is appended and ciphering is done before submitting the UMD PDU to the lower layers for transmission.

The receiving UM-RLC entity receives UMD PDUs through the configured logical channels from the lower layer. The receiving UM RLC entity deciphers (if ciphering is configured and started) the payload of the received UMD PDUs. It removes RLC headers from received UMD PDUs, and reassembles RLC SDUs (if segmentation and/or concatenation has been performed by the transmitting UM RLC entity). RLC SDUs are delivered by the receiving UM RLC entity to the upper layers through the UM-SAP.

The basic mechanism of Acknowledged Mode RLC communication is shown in Figure 4.26. The AM RLC entity can be configured to utilize one or two logical channels. Figure 4.26 shows the model of the AM RLC entity when one logical channel (shown as a solid line) and when two logical channels (shown as dashed lines) are used. If one logical channel is configured, the transmitting side of the AM RLC entity submits AMD (AM Data) and Control PDUs to the lower layer on that logical channel. The RLC PDU size is the same for AMD PDUs and Control PDUs. If two logical channels are configured in the uplink, AMD PDUs are transmitted on the first logical channel, and Control PDUs are transmitted on the second logical channel. If two logical channels are configured in the downlink, AMD and Control PDUs can be transmitted on any of the two logical channels.

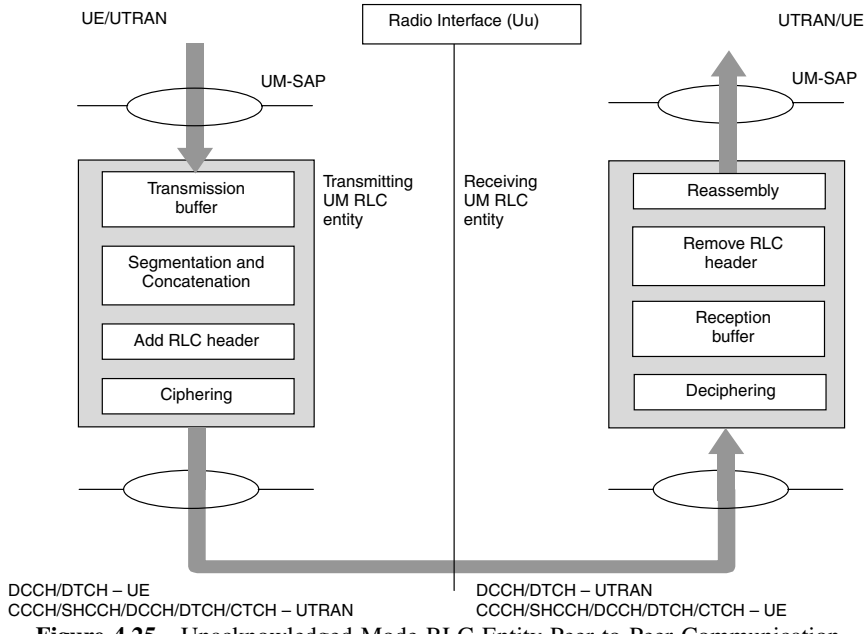

Figure 4.25 Unacknowledged Mode RLC Entity Peer-to-Peer Communication

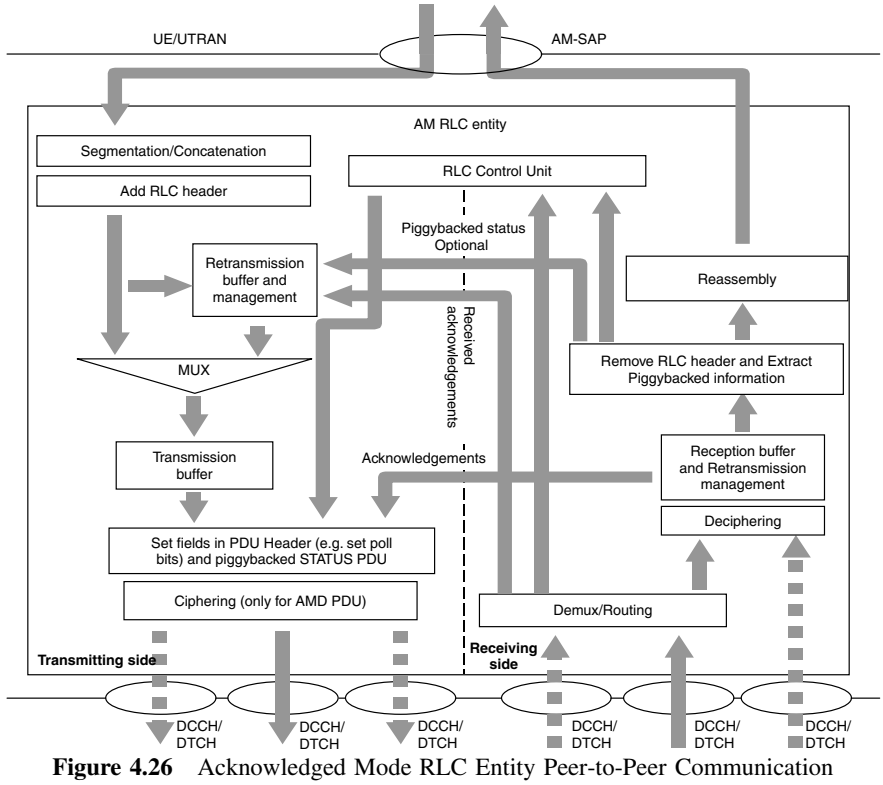

Figure 4.26 Acknowledged Mode RLC Entity Peer-to-Peer Communication

The transmitting side of the AM-RLC entity receives RLC SDUs from upper layers through the AM-SAP. RLC SDUs are segmented and/or concatenated into AMD PDUs of a fixed length. The segmentation is performed if the received RLC SDU is larger than the length of available space in the AMD PDU. The AMD PDU size is a semi-static value that is configured by upper layers and can only be changed through re-establishment of the AM RLC entity by upper layers. The AMD PDU may contain segmented and/or concatenated RLC SDUs. The AMD PDU may also contain padding to ensure that it is of a valid size. Length Indicators are used to define boundaries between RLC SDUs within AMD PDUs. After the segmentation and/or concatenation has been performed, the AMD PDUs are placed in the Retransmission buffer.

AMD PDUs buffered in the Retransmission buffer are deleted or retransmitted based on the status report found within a STATUS PDU or Piggybacked STATUS PDU sent by the peer AM RLC entity. This status report may contain positive or negative acknowledgements of individual AMD PDUs received by the peer AM RLC entity. The MUX multiplexes AMD PDUs from the Retransmission buffer that need to be retransmitted, and the newly generated AMD PDUs delivered from the Segmentation/Concatenation function. The ciphering (if configured) is then applied to the AMD PDUs as well as Piggybacked STATUS PDU. The AMD PDU header and Control PDUs are not ciphered. The transmitting side of the AM RLC entity submits AMD PDUs to the lower layer through either one or two DCCH or DTCH logical channels.

The receiving side of the AM-RLC entity receives AMD and Control PDUs through the configured logical channels from the lower layer. AMD PDUs are routed to the Deciphering Unit, where AMD PDUs (minus the AMD PDU header) are deciphered (if ciphering is configured and started), and then delivered to the Reception buffer. The AMD PDUs are placed in the Reception buffer until a complete RLC SDU has been received. The Receiver acknowledges successful reception or requests retransmission of the missing AMD PDUs by sending one or more STATUS PDUs to the AM RLC peer entity, through its transmitting side. If a Piggybacked STATUS PDU is found in an AMD PDU, it is delivered to the Retransmission buffer and Management Unit at the transmitting side of the AM RLC entity, in order to purge the buffer of positively acknowledged AMD PDUs, and to indicate which AMD PDUs need to be retransmitted. Once all the AMD PDUs of an RLC SDU have been received, the associated AMD PDUs are reassembled by the Reassembly Unit into a complete RLC SDU and delivered to upper layers through the AM-SAP.

4.6.2.4 RLC Layer-to-Layer Communication

RLC communicates with the upper layers using the following ‘primitives’. See Figure 4.27 (The communication with the lower layer is described in section on MAC protocol). The RLC-AM-DATA family of primitives is used for Acknowledged Mode operation for sending and receiving RLC-SDUs between the RLC entity and upper layers. Similarly, RLC-UM-DATA and RLC-TM-DATA families of primitives describe Unacknowledged Mode and Transparent Mode operations.

The CRLC family of primitives are used by upper layers to ‘configure’, ‘suspend’ and ‘resume’ RLC entities as well as to obtain ‘status’ of RLC entities. The ‘configuration’ primitives also include ciphering-related information for AM and UM modes.

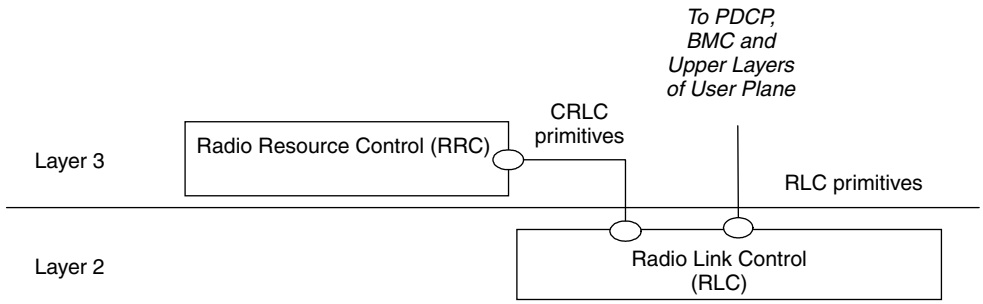

Figure 4.27 RLC Inter-Layer Primitives

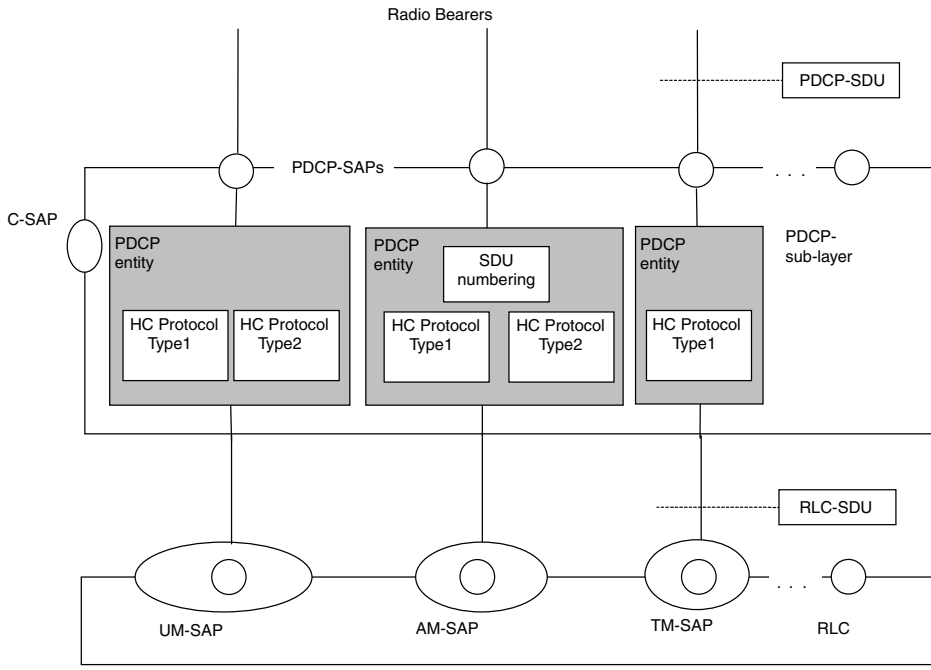

Figure 4.28 PDCP Architecture

4.6.3 Packet Data Protocols (PDCP)

4.6.3.1 PDCP Architecture

Figure 4.28 shows the model of the PDCP within the radio interface protocol architecture [9]. The PDCP sublayer is defined for the PS domain only. Every PS domain RAB is associated with one RB, which in turn is associated with one PDCP entity in the PDCP sublayer. Each PDCP entity is associated with one RLC entity.

Every PDCP entity uses zero, one or several different header compression protocol types. In Release 4 of the 3GPP/TDD specifications, only two header compression (HC) protocol types are supported: RFC 2507 [10] and RFC 3095 [11].

The PDCP sublayer is configured by the upper layer through the PDCP-C-SAP.

4.6.3.2 PDCP Services and Functions

The service provided by the PDCP to upper layers is the transfer of user (packet) data in an efficient manner over the radio interface. The efficiency is achieved by compressing the headers of IP packets, thus reducing the signaling overhead. These services are provided by the PDCP by implementing the following functions:

- Transmission of user data means that PDCP receives PDCP SDU from the Non-Access Stratum and forwards it to the RLC layer and vice versa.
- **Header compression and decompression refers to the** compression and decompression of headers of IP data streams (e.g., TCP/IP and RTP/UDP/IP headers) at the transmitting and receiving entity, respectively.

4.6.3.3 PDCP Peer-to-Peer Communication

PDCP peers communicate by exchanging PDUs, of which there are three types, as shown in Figure 4.29. PDU type is a 3-bit number, which indicates whether the PDU format is 2 (with Header) or 3 (with Header and Sequence Number). The PID is a 5-bit number specifying the type of Header Compression used. The PDU Sequence Number is a 16-bit number. The size of the data part of the PDU is a multiple of 8 bits, if the RLC entity is configured for unacknowledged or acknowledged mode. If the RLC entity is configured for transparent mode, it is bit-aligned.

4.6.3.4 PDCP Layer-to-Layer Communication

PDCP communicates with the upper (user plane) layers using the PDCP primitives, and with the RRC using CPDCP primitives, see Figure 4.30.

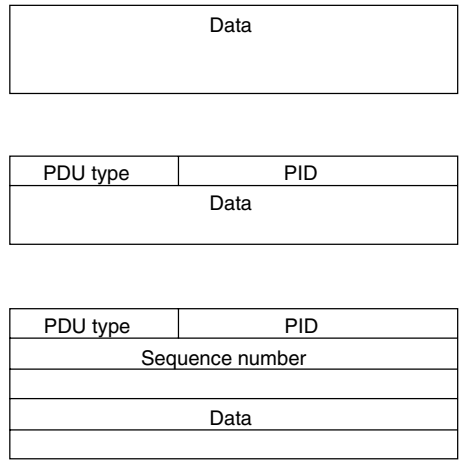

Figure 4.29 PDCP PDU Formats: (Top to Bottom) (1) No Header PDU, (2) PDU with Header, (3) PDU with Header and Sequence Number

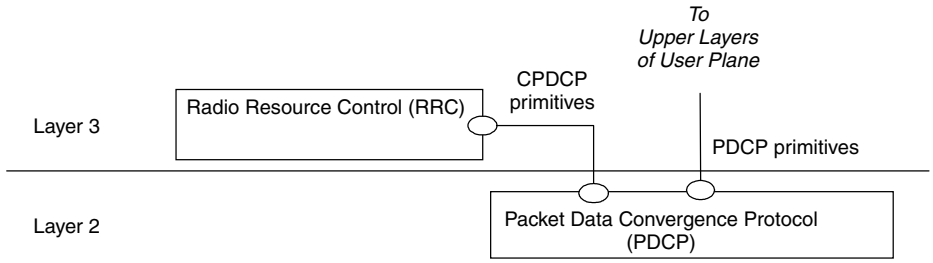

Figure 4.30 PDCP Inter-Layer Primitives

The PDCP-DATA primitives are used by the upper layers to request transfer of an upper layer PDU and by the PDCP to inform the upper layers that an upper layer PDU is ready to be delivered.

The CPDCP-CONFIGURATION and CPDCP-RELEASE primitives are used by RRC to configure and release a PDCP entity and assign it to a radio bearer. The configuration primitive parameters include Header Compression details, RLC mode (AM/UM/TM), etc.

4.6.4 BMC Protocol

4.6.4.1 BMC Architecture

Broadcast/Multicast Control (BMC) is a sublayer of Layer 2 that exists in the User-Plane only. It is located above RLC and uses the Unacknowledged mode of RLC. Each BMC entity uses a single CTCH/L, which is provided by the MAC sublayer. Figure 4.31 shows the model of the L2/BMC sublayer within the UTRAN radio interface protocol architecture.

4.6.4.2 BMC Services and Functions

The BMC-SAP provides a broadcast/multicast transmission service in the user plane on the radio interface for common user data in unacknowledged mode. This service is realized by the following BMC functions:

- **Storage of Cell Broadcast messages**.
- **Traffic volume monitoring and radio resource request for CBS**: On the UTRAN side, the BMC calculates the required transmission rate for the Cell Broadcast Service (CBS) based on the messages received, and requests for appropriate CTCH/L and FACH/T resources from RRC.
- **Scheduling of BMC messages**: On the UTRAN side, BMC generates schedule messages and schedules BMC message sequences accordingly. On the UE side, BMC evaluates the schedule messages and indicates scheduling parameters to RRC, which are used by RRC to configure the lower layers for CBS discontinuous reception.
- **Transmission of BMC messages to UE**: This function transmits the BMC messages (Scheduling and Cell Broadcast messages) according to schedule.
- **Delivery of Cell Broadcast messages to upper layer (NAS)**.

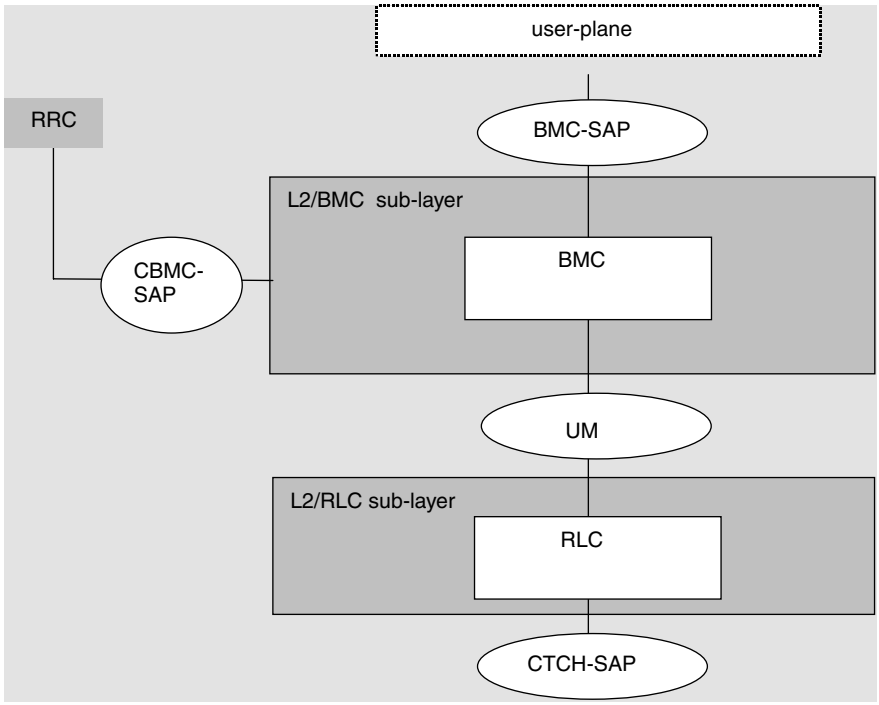

Figure 4.31 BMC Architecture

4.6.4.3 BMC Peer-to-Peer Communication

Peer entities of BMC communicate Cell Broadcast and Multicast Messages via standard scheduling techniques over CTCH/L + FACH/T channels.

4.6.4.4 BMC Layer-to-Layer Communication

As shown in Figure 4.32, BMC primitives and CBMC primitives are used for exchanging messages between User Plane Upper layers and RRC respectively.

Some example primitives are described here. The complete list can be found in [12, section 8]:

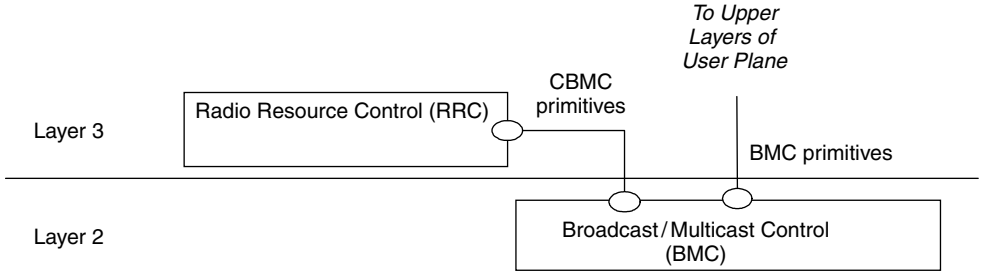

Figure 4.32 BMC Inter-Layer Primitives

- The BMC-DATA primitives are used by the User Plane Upper layers to request the transfer of a Cell Broadcast message, by the BMC to deliver an Upper layer Cell Broadcast message and confirm delivery respectively. These primitives specify the Message Data, Message Serial Number, Repetition Period, Number-of-Broadcasts, etc.
- The BMC-CONGESTION primitives are used by the BMC entity to report congestion and normal conditions respectively to upper layers.
- The RRC entity uses the CBMC-CONFIG primitives to inform the BMC about the setting of a CTCH/L configuration for the transfer of Broadcast/Multicast messages. The primitive specifies the FACH/L parameters such as TB size, TBS size, TTI and the Transmission Rate (0, 1, . . . 32 kbps).
- Similarly, the BMC entity uses CBMC-MEASUREMENT primitives to report traffic volume.

4.7 LAYER 3 COMMUNICATION

As explained in Section 4.1, Layer 3 separates the User Plane and the Control Plane in the horizontal direction as well as the Access Stratum and Non-Access Stratum in the vertical dimension. The Access Stratum consists of protocols terminating in the UTRAN, whereas the Non-Access Stratum consists of protocols terminating in the Core Network, with transparent transfer through the UTRAN. The Access Stratum C-plane protocol is the Radio Resource Control (RRC) protocol, which interfaces with Layer 2 as well as Layer 1. The Non-Access Stratum protocols in the C-plane are Mobility Management (MM) and Call Control (CC) protocols. The RRC protocol interfaces to Non-Access Stratum protocols via the General Control (GC), Notification (Nt) and Dedicated Control (DC) SAPs.

4.7.1 Radio Resource Control (RRC) Protocol

4.7.1.1 RRC Architecture

The overall architecture of RRC is shown in Figure 4.33 from the UE point of view. The RRC layer consists of a number of Function Entities. They are the Dedicated Control Function Entity (**DCFE**), the Shared Control Function Entity (**SCFE**), the Paging and Notification control Function Entity (**PNFE**), the Broadcast Control Function Entity (**BCFE**), the Routing Function Entity (**RFE**) and the Transfer Mode Entity (**TME**).

The UTRAN view is similar except for the direction of message flow. Specifically, RRC signals will flow from the BCFE and PNFE to the lower layers (i.e. from the higher layers of the UTRAN to the Physical layer).

On the network side, the Dedicated Control Function Entity (**DCFE**) handles all RRC services and functions specific to one UE. The Shared Control Function Entity (**SCFE**) controls the allocation of the PDSCH/P and PUSCH/P physical channels. The Paging and Notification control Function Entity (**PNFE**) controls the paging of UEs that do not have an RRC connection. The Broadcast Control Function Entity (**BCFE**) is used to deliver the RRC broadcast services. The Routing Function Entity (**RFE**) handles the routing of higher layer messages to different MM/CM entities (UE side) or different core network domains (UTRAN side). Finally, the Transfer Mode Entity (**TME**) handles the mapping between the different entities inside the RRC layer and the SAPs provided by RLC.

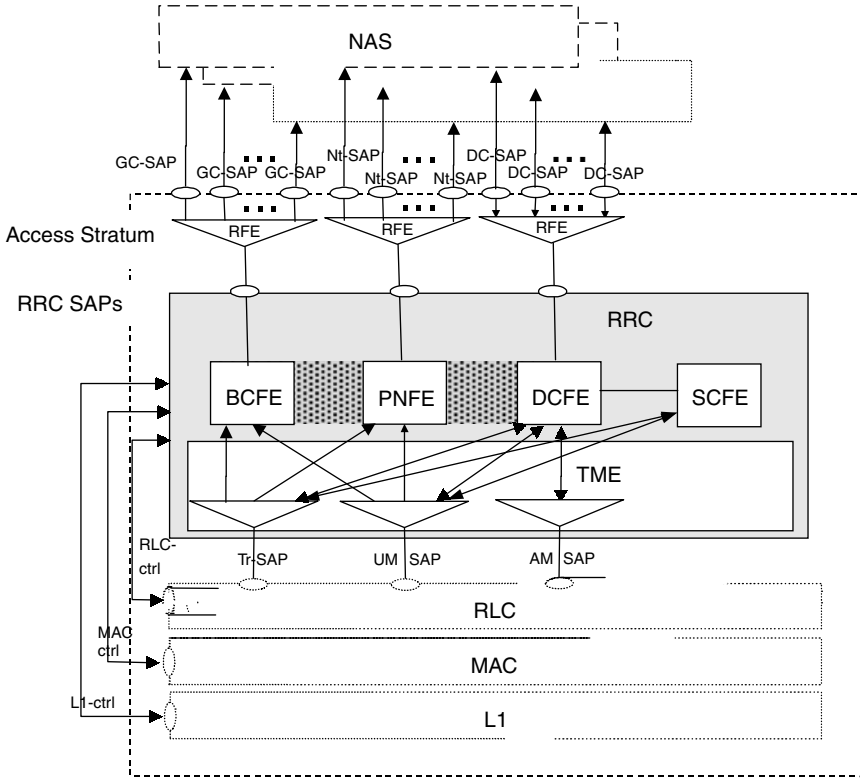

Figure 4.33 RRC Model: UE View

4.7.1.2 RRC Services and Functions

The RRC offers General Control (of the Broadcast type), Dedicated Control (of a single UE) and Notification services (of the Paging type) to the upper layers. This is done by the RRC layer providing a signaling connection to the upper layers. This RRC signaling connection supports all the signaling requirements between the UE and a Core Network domain.

Additionally, the Radio Resource Control (RRC) layer also controls the various protocol entities of the Access Stratum (via Inter-Layer procedures).

The RRC services are realized via the following RRC functions:

- Management of RRC connections between the UE and UTRAN: The establishment of an RRC connection is initiated by a request from higher layers on the UE side to establish the first Signaling Connection for the UE. The establishment of an RRC connection includes an admission control function (at the UTRAN) as well. The release of an RRC connection can be initiated by a request from higher layers to release the last Signaling Connection for the UE or by the RRC layer itself in case of RRC connection failure. In case of connection failure, the UE requests re-establishment of the RRC connection.

- The RRC layer also handles the assignment and reconfiguration of radio resources (e.g. codes) needed for the RRC connection, taking into account both control and user plane needs.
- The RRC layer performs evaluation, decision and execution related to RRC connection mobility during an established RRC connection, such as handover, preparation of handover to GSM or other systems, cell re-selection and cell/paging area update procedures, based on, for example, measurements done by the UE.
- Management of Radio Bearers: The RRC layer can, on request from higher layers, perform the establishment, reconfiguration and release of Radio Bearers in the user plane. A number of Radio Bearers can be established to a UE at the same time. On establishment and reconfiguration, the RRC layer performs admission control and selects parameters describing the Radio Bearer processing in Layer 2 and Layer 1, based on information from higher layers.
- Management of QoS: This function ensures that the QoS requested for the Radio Bearers can be met. This includes the allocation of a sufficient number of radio resources and the appropriate assignment of processing parameters such as coding type, rate and RM parameters.
- Resource Allocation: On the network side, RRC controls the allocation of preferred radio resources based on long-term decision criteria as well as on a fast basis. These Radio Resource Management (RRM) functions are discussed in great detail in Chapter 7.
- Cell Selection Reselection: On the UE side, RRC controls the selection of the most suitable cell based on measurements and cell selection reselection criteria.
- Paging/Notification: On the network side, the RRC layer broadcasts paging and notification information from the network to selected UEs, upon being requested by higher layers.
- Broadcast of information: On the network side, the RRC layer performs system information broadcasting from the network to all UEs. The system information is normally repeated on a regular basis. The RRC layer performs the scheduling, segmentation and repetition. The broadcast information may be related to the Access Stratum (i.e. specific to a cell) or the Non-Access Stratum (related to the Core Network applying to more than one cell).

  Other miscellaneous functions performed are:

- UE Measurements: The measurements performed by the UE are controlled by the RRC layer at the Network, in terms of what to measure, when to measure and how to report. The RRC layer at the UE also performs the reporting of the measurements from the UE to the network.
- Power Control: The RRC layer controls setting of the target of the closed loop power control. (The Power Control topic is discussed in Chapter 5.)
- Ciphering: The RRC layer provides procedures for setting of ciphering (on/off) between the UE and UTRAN.
- Message Integrity: This function adds a Message Authentication Code (MAC-I) to those RRC messages that are considered sensitive and/or contain sensitive information.
- Timing Advance: The RRC controls the operation of timing advance. (Details on Timing Advance are given in Chapter 5.)

- Routing of higher layer PDUs. At the UE, this function performs routing of higher layer PDUs to the correct higher layer entity, and at the UTRAN, to the correct RANAP entity.

4.7.1.3 RRC Peer-to-Peer Communication

The RRC information is exchanged between Peer RRC entities (at the UE and UTRAN) via RRC Messages, which play the role of RRC PDUs. Some important examples are given now. The complete list of messages is found in [6, section 10.2].

RRC CONNECTION REQUEST/SETUP
RRC STATUS
RADIO BEARER SETUP/RECONFIGURATION/RELEASE
UE CAPABILITY INFORMATION
INITIAL DIRECT TRANSFER
DOWNLINK/UPLINK DIRECT TRANSFER
PHYSICAL CHANNEL RECONFIGURATION
UPLINK PHYSICAL CHANNEL CONTROL
PHYSICAL SHARED CHANNEL ALLOCATION
TRANSPORT CHANNEL RECONFIGURATION
TRANSPORT FORMAT COMBINATION CONTROL
MEASUREMENT CONTROL/REPORT
CELL UPDATE/CONFIRM
URA UPDATE
PAGING TYPE 1 or 2
HANDOVER FROM UTRAN
SECURITY MODE COMMAND
SYSTEM INFORMATION

Each of these messages is either from the UE to the UTRAN or vice versa, and is transferred via lower layers via RLC-SAP (either using AM or UM or TM) and an appropriate Logical Channel. For example, the RRC CONNECTION REQUEST is a message from UE to UTRAN and uses RLC Transparent Mode over the CCCH/L logical channel.

4.7.1.4 RRC Layer-to-Layer Communication

RRC communicates with the higher sub-layers of Layer 3, namely MM and CM sublayers as shown in Figure 4.34.

RR_ESTABLISHMENT primitives are used by the MM entity to request the RRC entity for a Mobile Originated RR Connection and by the RRC entity to the MM-entity to indicate the establishment of an RR connection. Similarly, RR_DATA primitives are used to request transferring data between peer MM entities. Finally, RR_SYNCHRONIZATION primitives are used to synchronize the MM entity and the RRC entity with regard to ciphering, integrity protection, etc.

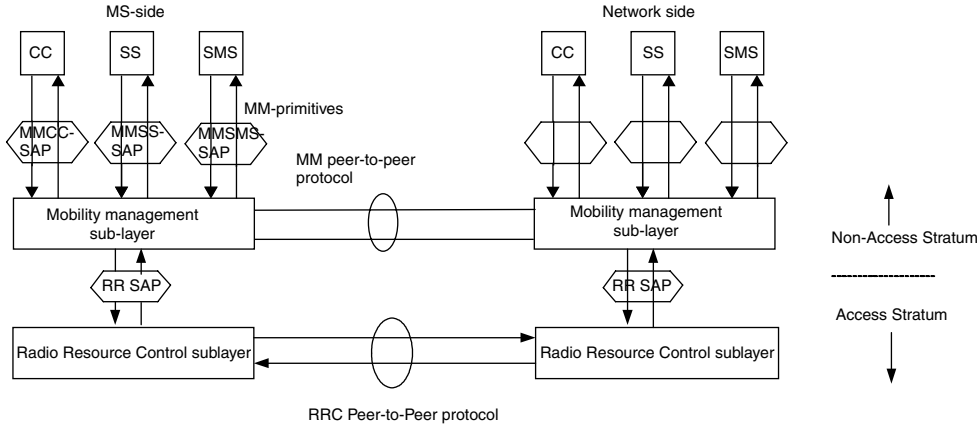

Figure 4.34 RRC Inter-Layer Primitives

APPENDIX 4.1 SYSTEM INFORMATION BLOCKS

The information on BCCH/L is transmitted in the form of 'Information Blocks'. There are three kinds of Information Blocks: Master Information Block (MIB), Scheduling Block (SB) and System Information Block (SIB).

Table 4.6 describes the nature of the system information carried by various blocks and when the UE reads them. (The missing SIBs are meant exclusively for FDD and are therefore not included here.) Note that the last column refers to RRC States, described in Section 4.7.

Table 4.6 System Information Blocks

System Information Block	Area Scope	Nature of System Information	UE Mode/State when Block is Read
MIB	Cell	PLMN ID and SIB reference list	Idle mode, CELL_FACH, CELL_PCH, URA_PCH
SB1	Cell	SIB Reference list	Idle mode, CELL_FACH, CELL_PCH, URA_PCH
SB2	Cell	SIB Reference List	Idle mode, CELL_FACH, CELL_PCH, URA_PCH
SIB-1	PLMN	NAS Info and UE Timers and Counters	Idle
SIB-2	Cell	Periodic Cell and URA Update Info	URA_PCH
SIB-3	Cell	Cell Selection and Re-selection Parameters	Idle mode, CELL_FACH, CELL_PCH, URA_PCH
SIB-4	Cell	Cell Selection and Re-selection Parameters in Connected Mode.	CELL_FACH, CELL_PCH, URA_PCH

(*continued overleaf*)

Table 4.6 (*continued*)

System Information Block	Area Scope	Nature of System Information	UE Mode/State when Block is Read
SIB-5	Cell	Common and Shared Physical and Transport Channel Configuration Parameters and Open Loop Power Control parameters if SIB 6 is not present or does not include OLPC parameters	Idle mode, CELL_FACH, CELL_PCH, URA_PCH, CELL_DCH
SIB-6	Cell	Common and shared Physical and Transport Channels Configuration Parameters in Connected Mode.	CELL_FACH, CELL_PCH, URA_PCH, CELL_DCH
SIB-7	Cell	Fast Changing Parameters, Dynamic Persistence	Idle mode, CELL_FACH, CELL_PCH, URA_PCH, CELL_DCH
SIB-11	Cell	Measurement Control Information	Idle mode, CELL_FACH, CELL_PCH, URA_PCH
SIB-12	Cell	Measurement Control Information in Connected Mode	CELL_FACH, CELL_PCH, URA_PCH
SIB-13	Cell	ANSI-41 System Information	Idle Mode, CELL_FACH, CELL_PCH, URA_PCH
SIB-14	Cell	Parameters for Common and Dedicated Physical Channel UL Open Loop Power Control Information	Idle Mode, CELL_FACH, CELL_PCH, URA_PCH, CELL_DCH
SIB-15	Cell	LCS (Location Service) Related Information	Idle Mode, CELL_FACH, CELL_PCH, URA_PCH
SIB-16	PLMN	Radio Bearer Transport and Physical Channel Parameters used during Handover to UTRAN	Idle Mode, CELL_FACH, CELL_PCH, URA_PCH
SIB-17	Cell	Fast Changing Parameters for Shared Physical and Transport Channel in Connected Mode	CELL_FACH, CELL_PCH, URA_PCH, CELL_DCH
SIB-18	Cell	PLMN Ids of Neighbor Cells	Idle mode, CELL_FACH, CELL_PCH, URA_PCH

REFERENCES

[1] 3GPP TS 25.301 v4.4.0, '3GPP; TSG RAN; BS Radio Transmission and Reception (TDD) (Release 4)', 2002–03.
[2] 3GPP TS 25.222 v4.6.0, '3GPP; TSG RAN; Multiplexing and Channel Coding (TDD) (Release 4)', 2002–12.
[3] 3GPP TS 25.223 v4.5.0, '3GPP; TSG RAN; Spreading and Modulation (TDD) (Release 4)', 2002–12.
[4] 3GPP TS 25.102 v4.4.0, '3GPP; TSG RAN; UE Radio Transmission and Reception (TDD) (Release 4)', 2002–03.
[5] 3GPP TS 25.105 v4.4.0, '3GPP; TSG RAN; BS Radio Transmission and Reception (TDD) (Release 4)', 2002–03.

[6] 3GPP TS 25.331 v4.5.0, '3GPP; TSG RAN; Radio Resource Control (RRC); Protocol Specification (Release 4)', 2002–06.
[7] 3GPP TS 25.221 v3.4.0, '3GPP; TSG RAN; Physical Channels and Mapping of Transport Channels to Physical Channels' (Release 1999)', 2002–09.
[8] 3GPP TS 25.302 v4.1.0, '3GPP; TSG RAN; Services Provided by the Physical Layer (Release 4)', 2001–06.
[9] 3GPP TS 25.323 v4.5.0, '3GPP; TSG RAN; Packet Data Convergence Protocol (PDCP) Specification (Release 4)', 2002–06.
[10] IETF RFC 2507 'IP Header Compression'.
[11] IETF RFC 3095 'Robust Header Compression (ROHC)'.
[12] 3GPP TS 25.324 v4.1.0, '3GPP; TSG RAN; Broadcast/Multicast Control (BMC) (Release 4)', 2002–06.

5

TDD Procedures

In this chapter, a number of key procedures across the TDD Radio Interface will be described. The procedures will be limited to those involving the UE and the UTRAN and will not, in general, cover the Core Network. However, we will briefly address in the last section the end-to-end procedures for user applications, which is included to illustrate how the TDD procedures fit into the overall end-to-end applications.

The TDD procedures are highly dependent upon the so-called RRC mode of the UE. Accordingly, we first describe the RRC Modes and associated States. Then we describe the TDD procedures involved in the initial System Access, the User Data Transmission, the Mobility Management and the Network (Radio-related) Operations. Finally, end-to-end procedures are briefly described from an Application point of view.

5.1 INTRODUCTORY CONCEPTS

5.1.1 RRC Modes and States

The modes and states of the UE represent the level of activity of the RRC Layer. The two modes of operation of the UE RRC are the *Idle* and *Connected* Modes. When the UE powers on, it looks for a suitable cell and tunes to its control channel. The UE, by default, enters Idle Mode. In this mode, there is no connection between the UE and the UTRAN and the location of the UE is known only to the Core Network. The location may be known in terms of geographic area referred to as Location Area (LA) or Routing Area (RA).

In order to move from Idle Mode to Connected Mode, the UE must establish an RRC connection, which is initiated by the RRC Connection Establishment procedure. Upon successful completion of the RRC Establishment procedure, the UE enters the Connected Mode. The establishment of the RRC connection may also be initiated by the Core Network via LA Update or RA Update procedures.

Once in Connected Mode, the UE can be in one of four states, maintained by the UTRAN (specifically, the entity called S-RNC DCFE – Dedicated Control Function Entity). The four states are: CELL_DCH, CELL_FACH, CELL_PCH and URA_PCH.

From Idle Mode, the UE may enter Connected Mode into CELL_FACH or CELL_DCH states (see Figure 5.1). The UE enters CELL_DCH if a dedicated physical channel is assigned during the RRC connection establishment. Otherwise, the UE enters the CELL_FACH state.

Wideband TDD: WCDMA for the Unpaired Spectrum P.R. Chitrapu
© 2004 John Wiley & Sons, Ltd ISBN: 0-470-86104-5

Once in CELL_FACH state, a DCCH is established and the UE monitors the selected SCCPCH/P and sends information in the PRACH/P:RACH/T. In CELL_FACH state, the UE may perform the cell re-selection procedure and camp onto a different cell.

From CELL_FACH state, the UE transitions to CELL_DCH state when a dedicated physical channel is established. In CELL_DCH state, the UE sends DCCH/L and DTCH/L data in the associated DCH/T transport channel. In this state, the UE mobility is managed through handover procedures, which are commanded by the UTRAN. In the CELL_DCH state, the UE could also use common transport channels, namely RACH/T:FACH/T.

In CELL_PCH and URA_PCH states, there are no dedicated/shared data connections between the UE and the UTRAN and the UTRAN must page to reach the UE. If the UTRAN knows the cell in which the UE is located, then the UE is said to be in the CELL_PCH state. On the other hand, the UTRAN may only know that the UE is located in a group of cells, referred to as UTRAN Registration Area (URA). In this case, the UE is said to be in a URA_PCH state and the UTRAN must page in all the cells of the URA to reach the UE. While the UE is in these states, the UE may also initiate Cell-Update or URA-Update procedures to reach the UTRAN. In these procedures, the UE sends 'Cell/URA Update' messages on the RACH/T and returns to CELL_FACH state. Since the physical area of URA is greater than that of a cell, the mobile UE saves more power in the URA_PCH state than in CELL_PCH as it sends Update messages less often. However, if the UTRAN has to reach the UE in URA_PCH state, the UTRAN has to send the page in the paging channels of all cells in the URA.

Although Idle Mode may seem similar to the CELL_PCH/URA_PCH states, there are some important differences. There is no RRC connection in Idle Mode. Furthermore, the battery consumption could be smaller in the Idle Mode, because a smaller number of Location Updates is typical (due to the larger area of a LA/RA compared to that of a URA/Cell).

The UE modes and states transition are shown in Figure 5.1.

As shown in Figure 5.1, the UE can transition between the Idle Mode and the Connected Mode (only CELL_FACH and CELL_DCH states) via RRC Connection Establishment and RRC Connection Release procedures.

Similarly, the UE can transition between the CELL_FACH and CELL_DCH states of the Connected Mode by establishing or releasing a Dedicated Physical Channel (DPCH).

From CELL_FACH and CELL_DCH states, the UE can transition to paging states, namely CELL_PCH and URA_PCH, by appropriate signaling from the network. Conversely, the UE can go from the paging states to the CELL_FACH/CELL_DCH states by Cell/URA Update procedures initiated by the UE.

The optimal UE RRC state is in general influenced by both the UE traffic activity and UE mobility as shown in Figure 5.2.

5.1.2 DRX/Sleep Mode

When the UE is in Idle Mode or Cell/URA_PCH states of the Connected Mode, the UE has to perform only a small set of functions, such as maintain synchronization with the UTRAN, perform radio measurements, receive any UTRAN initiated pages, etc. Furthermore, it is typical for a UE to be in these states/modes for an extended period of time. As such, it is economical for the UE to enter a 'sleep mode' in which the power to most of the parts of the UE is turned off, thereby extending the battery life. This sleep mode is facilitated by the so-called Discontinuous Reception (DRX) concept.

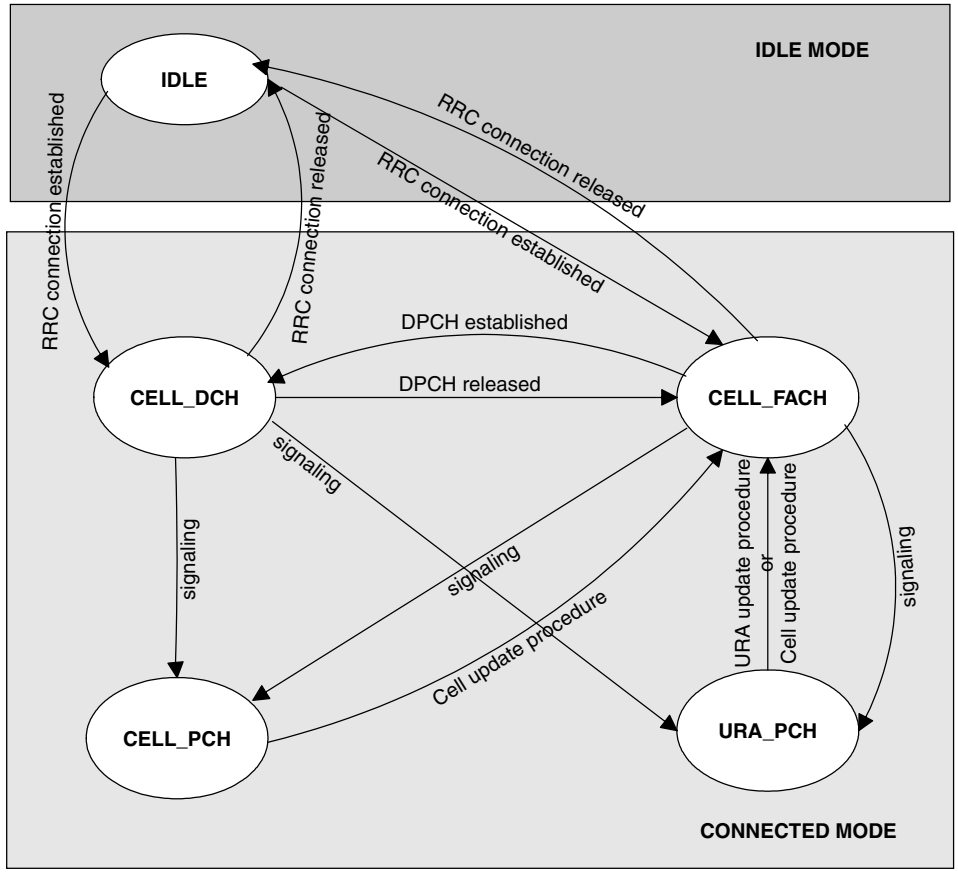

Figure 5.1 UE Mode and State Transitions

Essentially, DRX is a mechanism by which a UE 'wakes up' at regular intervals of time (known as DRX cycle) to perform 'house-keeping activities' (e.g. radio synchronization, listening to network initiated pages, etc.) and goes to 'sleep' (i.e. turn off most of the power-consuming parts of the UE) for the remainder of the DRX cycle. Alternately, the UE may also be 'woken up' from the sleep mode by User-initiated activity.

Information related to DRX cycle is transmitted on the BCCH/L via SIB1/5/6 or on DCCH/L via dedicated signaling [5]. This information consists of CN-specific DRX cycle length coefficient (kCN), UTRAN specific DRX cycle length coefficient (kUTRAN) and PICH/P Repetition Period (equal in value to PBP = Paging Block Period). The DRX cycle length is given by:

UE in Idle mode:
DRX cycle length = max (2^{kCN}, PBP)
UE in Connected Mode Cell/URA_PCH states:
DRX cycle length = min [max (2^{kUTRAN}, PBP), max (2^{kCN}, PBP)]

Clearly, a single DRX cycle may contain one or more PBPs.

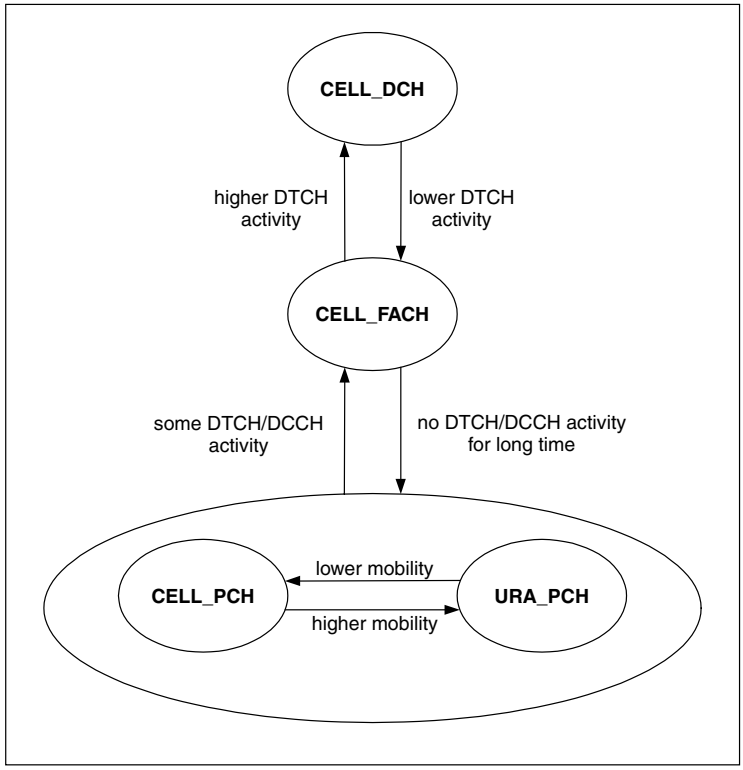

Figure 5.2 Optimization of Transitions Triggered by the UTRAN According to UE Activity and UE Mobility

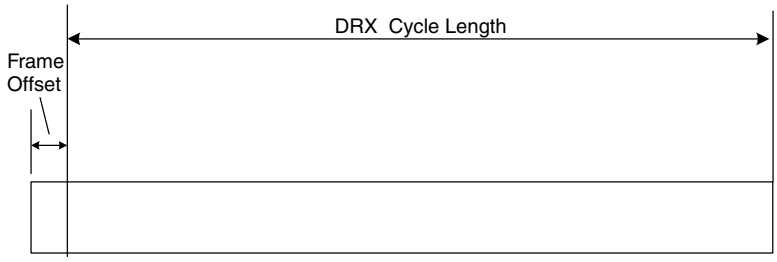

Figure 5.3 DRX Cycle

Since the values of kCN = 6 . . . 9, kUTRAN = 3 . . . 9, and PBP = 8, 16, 32, 64, the possible values of the DRX cycle length are as follows:

UE in Idle mode: DRX cycle length = 0.64, 1.28, 2.56 and 5.12 seconds.
UE in CELL/URA_PCH: DRX cycle length = 0.08, 0.16, 0.32, 0.64, 1.28, 2.56 and 5.12 seconds.

The start of the DRX cycle is specified in terms of the 12-bit SFN, with an initial Frame Offset, see Figure 5.3.

5.2 OVERVIEW OF PROCEDURES

Consider a UMTS-TDD network, consisting of a number of Base Stations (Node Bs). Each of the Base Stations broadcasts system information about the various radio parameters that will be needed by a UE to set up communications with the BS [System Broadcast Procedure]. The Base Stations themselves may be time synchronized with each other by using timing references derived from GPS or by explicit signaling over the air among the Base Stations [BS Synchronization Procedure].

In such a network, a subscriber turns on his/her user equipment, which first searches for a suitable cell (Base Station) of an appropriate PLMN to camp on [PLMN and Cell Search Procedure]. This is achieved by searching for the synchronization and broadcast signals. Having camped onto a cell, the user registers himself/herself with the Network, during which process the Network authenticates the user [Registration and Authentication Procedures]. Now the user is ready to access the network for communication services and vice versa. The access requests of various users are naturally uncoordinated and random in nature [Random Access Procedure]. The service request from the Network is performed by paging the user over areas of his/her location [Paging Procedure].

In any case, after accessing the network, a Radio Link may be established and managed. This is done by first establishing a RRC connection [RRC connection Procedure] that ensures a signaling connection to the Network, following which a Radio Bearer is established [RB Establishment Procedure], which is subsequently modified or released [RB Management Procedure]. In some abnormal cases, the radio link may fail, which has to be detected and appropriate action be taken [Radio Link Failure Procedure]. On a finer time scale, the Radio Link management consists of maintaining appropriate signal quality via power control [Power Control Procedure] and timing misalignment control [Timing Advance Procedure]. Finally, the user equipment may undergo periods of inactivity, where the transmission may be stopped temporarily to save the battery and power consumption and reduce system interference. However, such discontinuous transmission must make sure the synchronization is preserved [DTX procedure].

In wireless communication systems, security of communication is of great importance. For this purpose, data on the radio interface is encrypted [Encryption Procedure] and the integrity of signaling messages is protected by cryptographic methods [Integrity Protection Procedure].

One of the key aspects of mobile communications is Mobility Management (MM). In this book, we shall only consider MM implemented by the Radio Access Network and limit ourselves to Access Stratum-related procedures. In this limited context, the two relevant aspects of MM are Cell Reselection and Handovers. Cell Reselection refers to the user moving across one or more cells during periods of no activity (Idle Mode) or little activity (CELL_FACH/CELL_PCH/URA_PCH states of the Connected Mode). In such cases, the location information is updated by LA/RA Update Procedures in the Idle Mode and Cell/URA Update Procedures in the Connected Mode. Handover relates to the case where the user moves across a cell boundary during periods of activity (CELL_DCH of Connected Mode). In such cases the radio link with the new cell must be established and the one with the existing cell must be released [Handover Procedure]. Usually handovers are limited to the UTRAN, so that the connection to the Core Network (and hence the Serving RNS) remains fixed. However, in certain cases of handover, it may be advantageous to switch the RNS and hence the CN connection [SRNS Relocation Procedure].

Finally, the user conducts a communication process, such as a voice call [Circuit Call Procedure] or an Internet Browsing Session [Packet Session Procedure].

These procedures described above are listed below:

1. System Procedures
   (a) System Information Broadcast Procedures
   (b) BS Synchronization Procedure
2. System and UE Access Procedures
   (a) PLMN and Cell Search Procedure
   (b) Registration/Authentication Procedures
   (c) Random Access Procedure
   (d) Paging Procedure
3. Radio Link Establishment and Management Procedures
   (a) RRC Connection Procedures
   (b) RAB/RB Establishment Procedures
   (c) RAB/RB Management Procedures
   (d) Radio Link Failure Detection and Reporting
   (e) Power Control Procedures
   (f) Timing Advance Procedures
   (g) Radio Measurements Procedures
   (h) DTX Procedures
4. Mobility Management Procedures
   (a) LA/RA Update Procedures (not addressed)
   (b) Cell/URA Update Procedures
   (c) Handover Procedures
   (d) SRNS Relocation Procedures
5. Data Transmission Procedures (across the radio interface)
6. End-to-End Communication Set-Up Procedures
   (a) Circuit-Switched Call Set-Up Procedure
   (b) Packet-Switched Session Set-Up Procedure.

Most of these procedures involve the UE and the Network, characterized by a sequence of bi-directional messages that are exchanged. Exceptions include Procedure 1(a) (System Broadcast Procedure), which involves only messages emanating from the Network and Procedure 1(b) (Network Synchronization Procedure), which involves only messages within the Network (between Base Stations). Similarly, Procedure 2(a) (Cell Search Procedure) only involves UE, and is accompanied by any messages across the Radio Interface.

Additionally, most of the procedures listed above involve only the UTRAN and not the Core Network. Exceptions include Procedure 2(b) (Registration/Authentication Procedure) and Procedures 6(a) and 6(b) (End-to-End Communication Procedures). Since the focus of the book is only on the UTRAN, these procedures will be only described briefly or not at all.

Finally, most of the procedures involve all layers in the UTRAN, namely the Physical Layer, the Link Layer and the Network Layer of the UTRAN (Access Stratum).

In the following sections, some of the more involved procedures are described.

5.3 PLMN/CELL SELECTION/RESELECTION PROCEDURE

When a UE is switched on, typically the NAS selects a public land mobile network (PLMN) and sends a 'RRC PLMN Search REQ' primitive to the AS along with PLMN type and PLMN Identity. The UE/AS scans all RF channels in the UTRA bands and searches for the strongest cell. If the UE/AS can read the system information, match the PLMN identity and verify that the signal quality (RSCP of PCCPCH/P) exceeds a threshold, then UE/AS selects the cell and informs the UE/NAS with 'RRC PLMN Search CNF' primitive [2]. Figure 5.4 illustrates the procedure.

If a suitable cell is not found in the selected PLMN, the UE will attempt to camp on 'any' cell. In such a case, Cell Reselection may be triggered by a NAS primitive or autonomously by the AS at regular intervals of time. UE/AS searches for all available PLMNs and informs the UE/NAS. If a PLMN with higher priority is found, UE/NAS asks UE/AS to select a suitable cell (i.e. signal quality exceeds a threshold) belonging to the PLMN with highest priority. When a suitable cell belonging to the requested PLMN is found, that cell is selected and NAS is notified.

The UE/AS procedure for the cell search is now described [1]. During the cell search, the UE searches for a cell and determines the downlink scrambling code, basic midamble code and frame synchronization of that cell. The cell search is typically carried out in three steps:

1. Primary Synchronization Code (PSC) acquisition: During the first step of the cell search procedure, the UE uses the SCH's primary synchronization code to find a cell. This is typically done with a single matched filter (or any similar device) matched to the primary synchronization code, which is common to all cells. A cell can be found by detecting peaks in the matched filter output.

   Note that for a cell of SCH slot configuration case 1, the SCH can be received periodically every 15 slots. In case of a cell of SCH slot configuration case 2, the SCH can be received periodically twice every 15 slots, with the second SCH slot being at offsets of either 7 or 8 slots from the previous SCH slot. So, a SCH peak detected every 15 time/slots indicates case 1, whereas SCH peaks separated by 7 and 8 timeslots indicates case 2.
2. Code Group identification and slot synchronization: During the second step of the cell search procedure, the UE uses the SCH's Secondary Synchronization Codes (SSC) to identify 1 out of 32 code groups for the cell found in the first step. (Recall that there are 128 unique Cell Parameters, partitioned into 32 Code Groups with 4 Cell Parameters each. Each Cell Parameter is uniquely identified with a pair of short and long basic midamble codes. See Sections 3.2.2 and 4.2.1.3.)

   This is typically done by correlating the received signal with the secondary synchronization codes at the detected peak positions of the first step (once or twice per frame depending upon case 1 or case 2). The primary synchronization code provides the phase reference for coherent detection of the secondary synchronization codes. The code group can then uniquely be identified by detection of the maximum correlation values. (See section 4.2.1.3.)

   Since the code group uniquely identifies the t_{offset} parameter, the UE can derive the slot timing from the detected peak position in the first step and the t_{offset} parameter of the found code group in the second step. By detecting the modulation of the

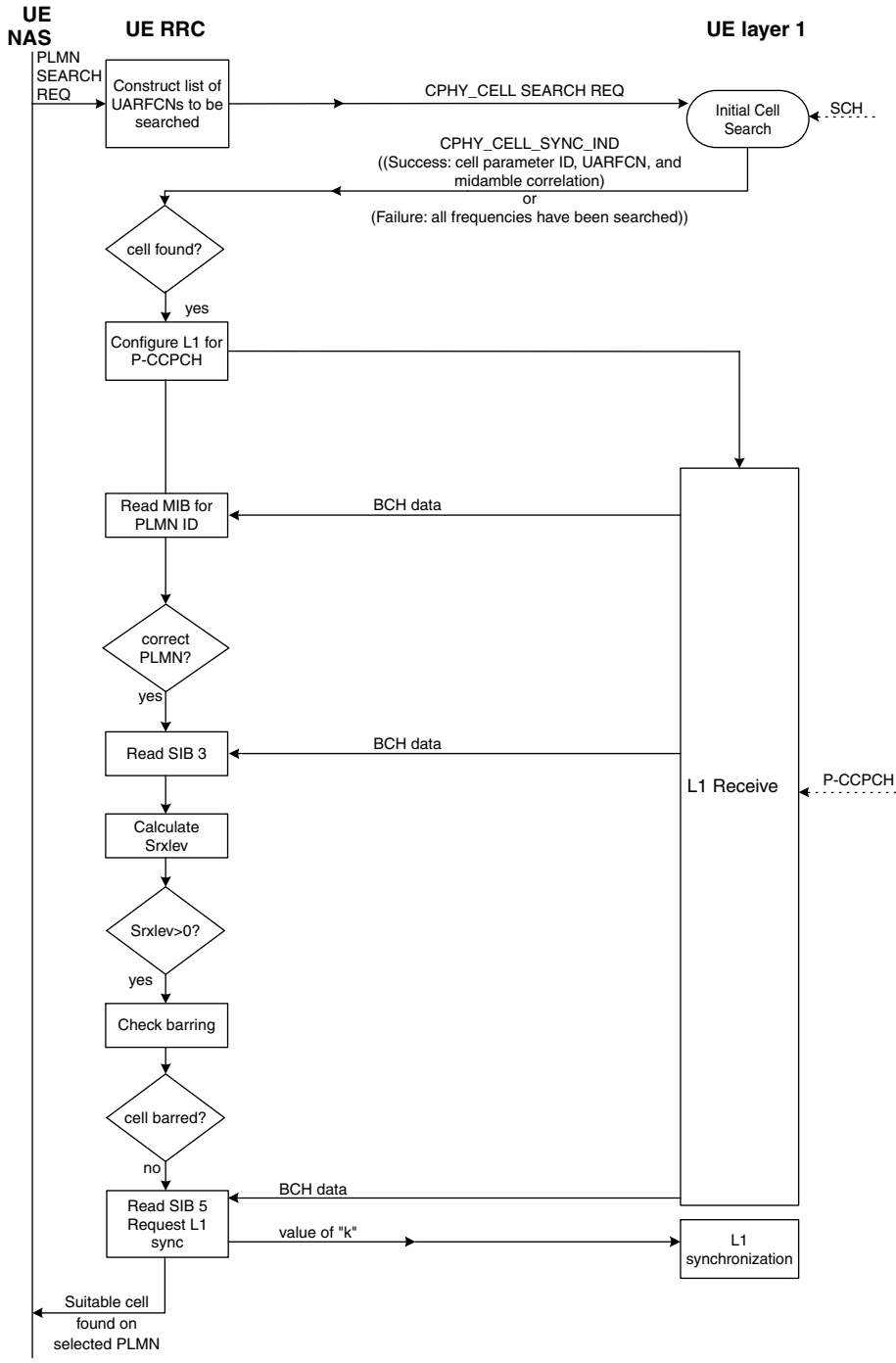

Figure 5.4 PLMN/Cell Selection Procedure

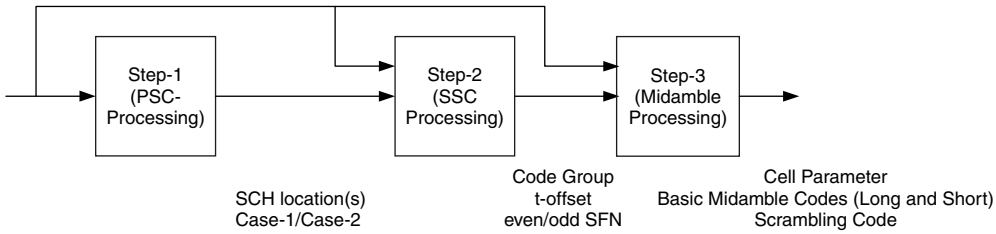

Figure 5.5 Cell Search Procedure

secondary synchronization codes, the UE can determine whether the SFN is even or odd. Similarly, for case 2, the SSC modulation also reveals the SCH slot position within one frame, e.g. first or last SCH slot.

3. Downlink scrambling code, basic midamble code identification and frame synchronization: During the third and last step of the cell search procedure, the UE determines the exact downlink scrambling code, basic midamble code and frame timing used by the found cell. This is done by correlating each of the four possible long basic midamble codes of the code group identified in step 2 and the midamble of the PCCPCH/P (which is located in the same timeslot as the SCH/P). Note that a PCCPCH/P always uses the midamble $m^{(1)}$ (and in case of SCTD also midamble $m^{(2)}$) derived from the long basic midamble code.

   When the long basic midamble code has been identified, the downlink scrambling code and the cell parameter are also known. The UE can read the system- and cell-specific BCH/T information, because the PCCPCH/P always uses a fixed and preassigned channelization code.

Note that a cell cycles through a set of two different cell parameters according to the SFN of a frame, e.g. the downlink scrambling code and the basic midamble code of a cell alternate for frames with even and odd SFN. However, since the even/odd nature of SFN is determined in step 2, this can be taken into account in decoding the BCH/T information. These steps are depicted in Figure 5.5.

5.4 RANDOM ACCESS PROCEDURE

Random Access procedure is the means by which a UE in the Idle Mode or CELL_FACH/CELL_PCH/URA_PCH states of the Connected Mode can request access for Network Services. The procedure essentially consists of the following steps:

1. UE reads the RACH-related System Information.
2. A PRACH/P channel is selected, and the MAC and PHY (RACH/T and FACH/T) layers are configured.
3. Access Service Class (ASC) is determined.
   (a) ASC sets the relative priority for the RACH transmission. Smaller values indicate higher priority.
   (b) ASC is determined by the RRC during initial (i.e. UE in Idle-Mode) access, based on Access Class of the UE. During subsequent accesses (i.e. UE is in Cell_FACH

state and RRC connection is established), ASC is determined by the MAC based on the MLP (MAC Logical Priority) of the logical channel (CCCH/DCCH/DTCH) in use.

4. MAC runs the backoff algorithm using the ASC value to determine whether or not to transmit the RACH message.
   (a) The backoff procedure basically generates a random number (R) and compares it to a number (X) computed based on ASC and other parameters. X is a non-increasing function of ASC value.
   (b) The procedure is considered successful if $R < X$, so that lower ASC values succeed with higher probability.
   (c) When the backoff procedure succeeds, MAC selects the PRACH sub-channel and CFN for RACH message transmission by the physical layer.
5. PHY randomly selects the channelization code and associated midamble, determines the power level for the RACH transmission and transmits the PRACH burst.
6. In case of successful receipt, UTRAN sends an 'ACK message'. For access via CCCH (e.g. for RRC Connection Request or Cell Update), the ACK message is a Layer 3 message. For access via DCCH/DTCH, the ACK message is provided by Layer 2 RLC-AM entity.
   It is a Layer 3 message sent via RLC Unacknowledged Mode on the FACH/T channel.
7. If UE does not receive an ACK and a Timer runs out, the RACH message is transmitted again as per the above steps.

Figure 5.6 illustrates the main steps. For simplicity, the RLC layer between the RRC and the MAC is not shown explicitly. During the initial access, RLC is used in its Transparent Mode, whereas the ACK is done in the Unacknowledged Mode RLC.

System parameters related to the random access procedure are broadcast on the BCCH/L as System Information Blocks (SIBs). (See Chapter 4 also.) Specifically, SIB-5 and SIB-6 contain the RACH/T and PRACH/P System Information List as well as the RACH/T and PRACH/P Information. In addition, they also contain a so-called PRACH constant value, which is an operator-controlled margin used to set the UE power on PRACH/P.

Each RACH/T, PRACH/P System Information consists of the following. See Figure 5.7.

- PRACH/P Information (timeslot number, channelization code list, midamble type).
- Transport channel identity.
- Transport Format (TF) information (Dynamic: Number of transport blocks; TB size; Semi-static: TTI (10 ms); channel coding; Rate matching attribute; CRC size.
- PRACH partitioning: An ordered list with at most 8 Access Service Classes (ASC), each of them characterized by available channelization codes indices, available sub-channels.
- Persistence scaling factors (s_i): Used to calculate the random backoff before MAC transmission.
- AC to ASC mapping: mapping of Access Classes into Access Service Classes.

In addition, SIB-7 carries the Dynamic persistence level (D) value, which is used to calculate the random backoff before MAC transmission. It is the same for all channels and all UEs in the cell.

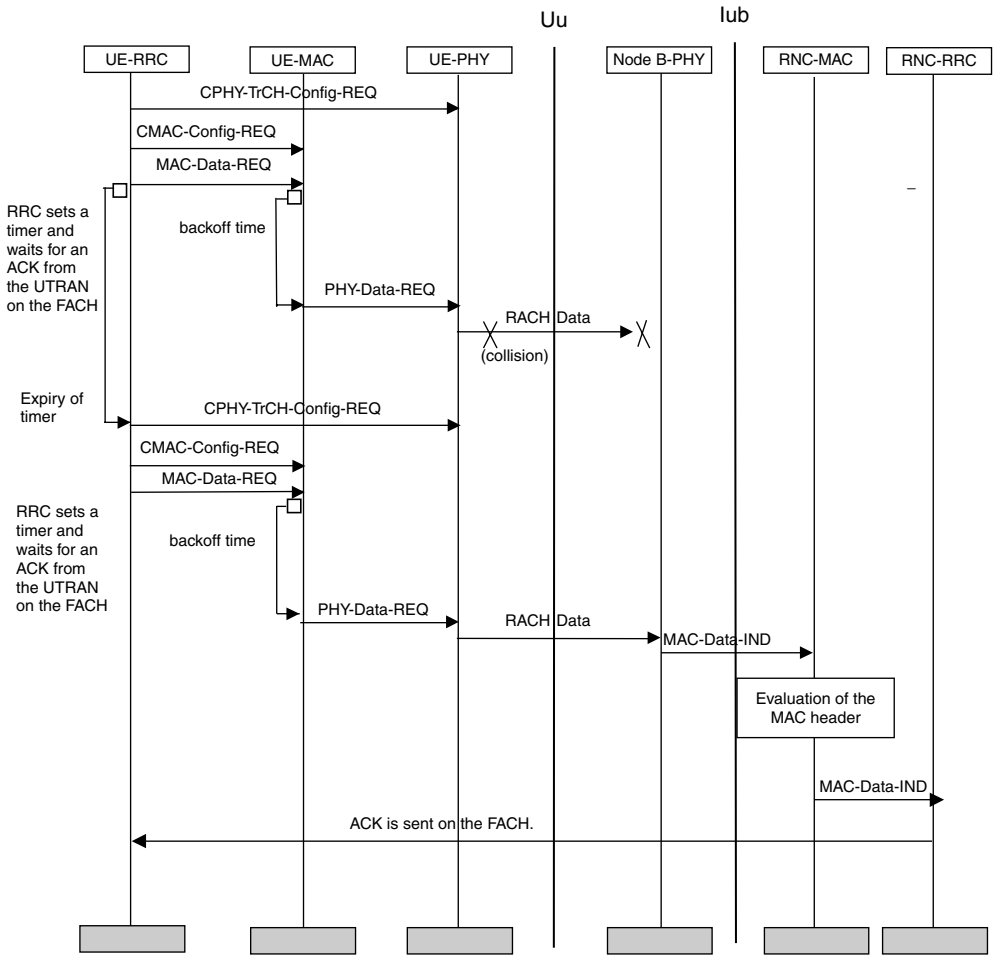

Figure 5.6 RACH Initial Access Procedure

5.5 PAGING PROCEDURES

The paging function provides a means by which the core network (CN) can inform a UE of incoming voice or data traffic. It also enables the UTRAN to inform a UE of system information updates or to indicate availability of downlink data for a UE in CELL_PCH/URA_PCH states. In the former case, UEs generally respond with a signaling connection establishment request by the non-access stratum (NAS).

5.5.1 Paging Types

CN-originated pages are sent to the RNC via Radio Access Network Application Part (RANAP) paging in CN Paging Messages. These messages or UTRAN generated pages are examined to determine what state the identified UE is in, in which cells to page this UE and when to schedule the page.

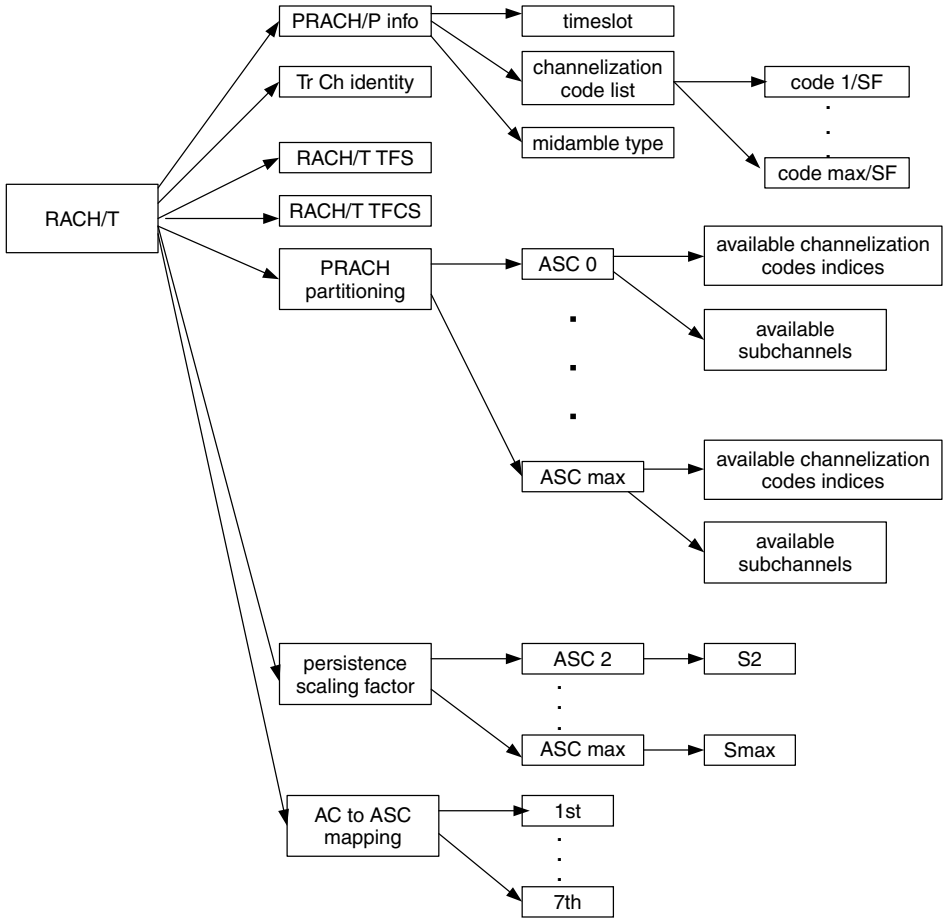

Figure 5.7 System Information Regarding RACH/T

If the UE is in Cell_DCH or Cell_FACH state of the Connected Mode, then the UE has an active DCCH/L. A page message is sent via the existing transport channel DCH/T or FACH/T via the physical channel DPCH/P or SCCPCH/P. This is called Dedicated Paging or PAGING TYPE 2. The paging done in all other cases is called Broadcast Paging or PAGING TYPE 1.

5.5.2 Paging Process at Layer 2 and Above

If the UE is in Idle Mode, then the UE is unconnected to the UTRAN-CN. The UE is known only at the LA or RA level and is identified using CN identity (such as IMSI or TMSI). A CN-generated page is sent via logical Paging Control Channels (PCCH/L) on transport Paging Channels (PCH/T) mapped to Secondary Common Control Physical Channels (SCCPCH/P). The paging cause is sent to the UE NAS, which may request establishment of a signaling connection. Similarly, a UTRAN-generated page, indicating an upcoming system information update, is also sent via PCCH/L:PCH/T:SCCPCH/P.

The BCCH/L modification information may specify the SFN when the BCCH/L should be read for system update information.

If the UE is in CELL_PCH or URA_PCH state of connected mode, then the UE has an inactive DCCH/L with no Layer 1 resources allocated. The UE is known at the Cell level (in the CELL_PCH state) and URA level (in the URA_PCH state) and is identified by URNTI. In response to the page, the inactive DCCH/L may be re-established.

5.5.3 Broadcast Paging

Shown in Figure 5.8 is an example of Broadcast Paging procedure when the UE is in Idle Mode, as executed between various network elements (UE, Node B, RNC etc). For a UE in RRC Idle Mode, only a general location for the UE is known at CN level and therefore paging is distributed over a defined geographical area (e.g. an LA). The example below illustrates the scenario where the LA spans across 2 RNCs. The UE will respond to the page request via one of the two RNCs (i.e., the one that controls the cell that the UE is camped on). The UE may be paged for a circuit switched (CS) or packet switched (PS) service.

In Step 1, CN initiates the paging of a UE over an LA spanning two RNCs (i.e. RNC1 and RNC2) via RANAP message paging. CN sends the following parameters in the paging message: CN Domain Indicator, Permanent NAS UE Identity, Temporary UE Identity, Paging Cause. Then Paging of UE is performed by cell 1 (Step 2) and cell 2 (Step 3) using PAGING TYPE 1 message. Then (Step 4), UE detects and responds to

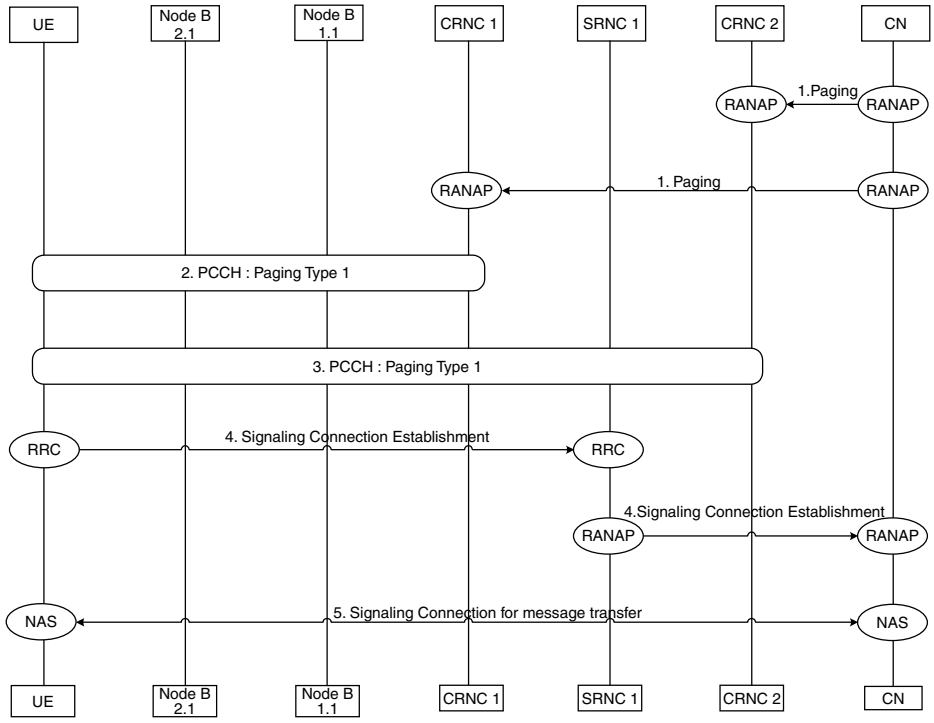

Figure 5.8 CN Paging Procedure across Network Elements

the page message from RNC1 by initiating an NAS signaling connection establishment. Finally (Step 5), NAS signaling connection between UE and CN is then used for the NAS message transfer.

Below, the details of the Type 1 Paging (Step 2 or 3) are depicted, as executed among the various protocol layers in the UE and the Network (NW). Figure 5.9 shows Inter-layer primitives and peer-to-peer communication (NW-MAC to UE-MAC) together with the parameters.

In the UE, an NAS entity issues the primitive 'RRC_Paging_Control_REQ', which tells RRC to listen to paging and notifications addressed to a given UE paging identity and on a paging group which can be calculated using information given from an NAS.

An NAS entity on the network side requests paging of a UE using the 'RRC_Paging_REQ' primitive over the Nt-SAP. The primitive contains a UE paging identity, an area where the page request is to be broadcast, information for calculation of the paging group and NAS information to be transparently transmitted to the UE by the paging request.

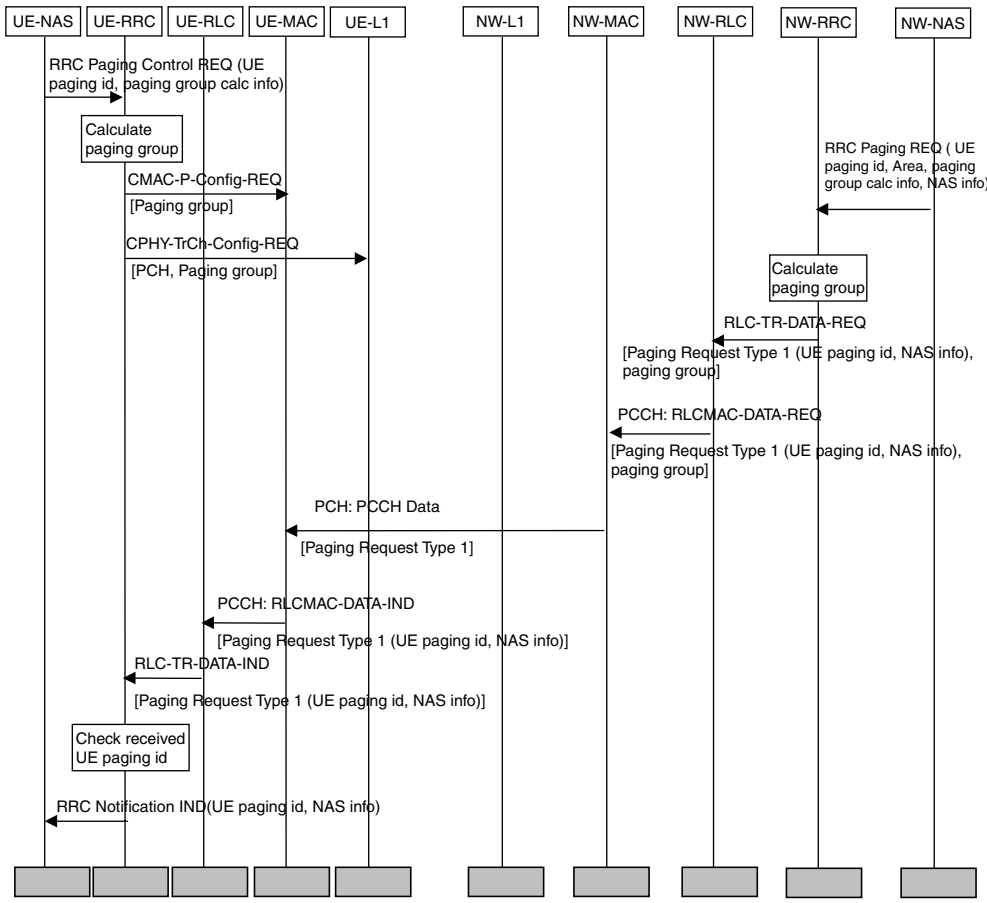

Figure 5.9 Paging Procedure across Protocol Layers

The RRC layer calculates the paging group, and formats a Paging Type 1 message containing the UE paging identity and the NAS information. The RRC layer then requests MAC to transmit the message on a specific PCH on the selected paging group. The PCH to be used for transmission of the paging message is selected based on the IMSI of the UE.

The UE periodically monitors the paging indicator. When set, the UE reads the associated paging group and the RRC layer compares the UE paging identities in received paging request messages with its own identities. When a match occurs, the UE paging identity and the NAS information are forwarded to the NAS entity of the UE. Note: The procedure described here for RRC Idle Mode applies with minor changes also to CELL_PCH and URA_PCH states of RRC Connected Mode.

5.5.4 Paging at Layer 1

Paging is done for UEs in Idle Mode or Cell/URA_PCH states of Connected Mode. In these situations, Discontinuous Reception (DRX) is applicable, so that the UE wakes up at the start of a DRX cycle to listen to its assigned Page Indicators (PI). These instants of time are referred to as Paging Occasions, and denote the beginning of a Paging Block. Each Paging Block consists of a number of Paging Indicators and a number of Paging Groups, with the Paging Message Receiving Occasions (PMROs) pointing to the beginning of each Paging Group [2]. Based on the IMSI, each UE is assigned a particular Paging Indicator and a particular Paging Group independently by higher layers. The UE checks for its assigned PI, which, if 'set', indicates that the corresponding Paging Group in the same Paging Block may carry Paging Data for that UE, see Figure 5.10.

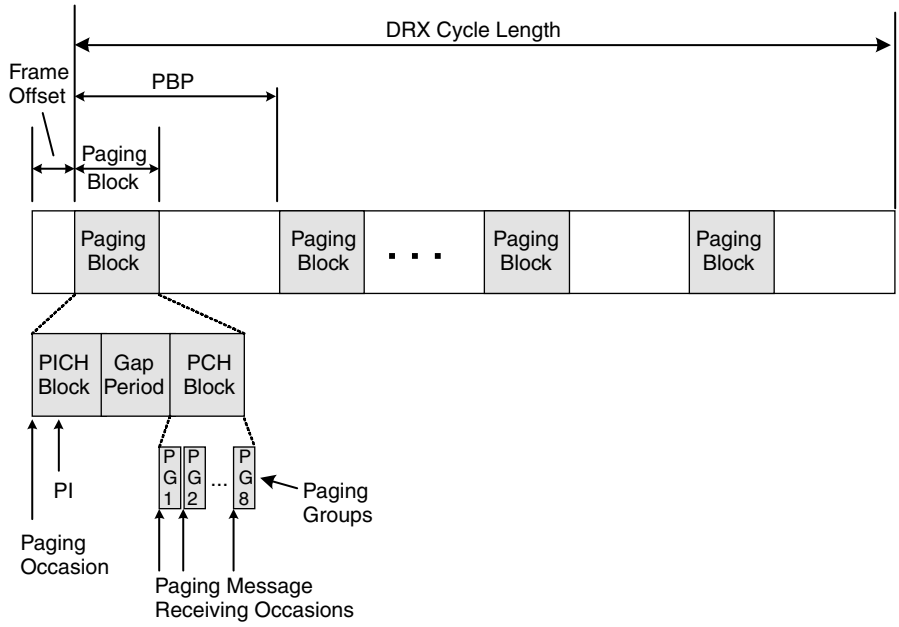

Figure 5.10 Paging Indicators and Paging Groups

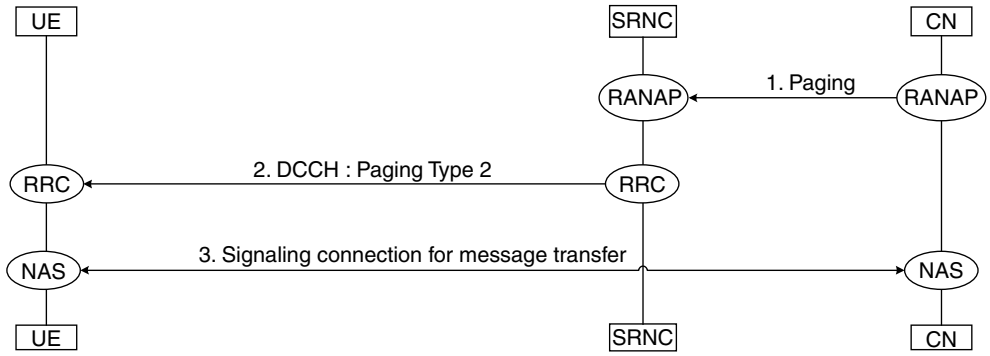

Figure 5.11 Paging for an UE in RRC Connected Mode (Cell_DCH or Cell_FACH States)

5.5.5 Dedicated Paging Example

The example in Figure 5.11 shows how paging is performed for an UE in the CELL_DCH and CELL_FACH states of the RRC Connected Mode, when the UTRAN coordinates the paging request with the existing RRC connection using DCCH/L.

Initially (Step 1), CN initiates the paging of an UE via a RANAP paging message, which contains the following parameters: CN Domain Indicator (PS or CS), Permanent NAS UE Identity (IMSI), Temporary UE Identity (optional), Paging Cause (optional). Then (Step 2), the SRNC sends a RRC message PAGING TYPE 2 on the existing RRC connection using DCCH. Finally (Step 3), the UE responds by requesting a signaling connection establishment via an Initial Direct Transfer towards the paging CN domain.

5.6 RRC CONNECTION PROCEDURES

RRC Connection Establishment allows a UE to transition from Idle Mode to Connected Mode (either Cell_FACH or Cell_DCH states) by establishing dedicated Signaling Radio Bearers between the UE and the UTRAN. The Signaling Radio Bearer is of the type of a DCCH logical channel for the purpose of sending dedicated signaling information. The Signaling Radio Bearer may be used, for example, to send an 'Initial Direct Transfer' message to the UTRAN NAS requesting the establishment of a service. The RRC Connection establishment is triggered by an UE in Idle Mode either when wishing to send uplink data, or when responding to a Page from the UTRAN.

5.6.1 Procedure between Network Elements

This example shows the establishment of an RRC connection on the RACH/FACH common transport channel as seen between the various Network Elements, see Figure 5.12 [4].

The following steps are involved in the RRC connection:

1. The UE initiates set-up of an RRC connection by sending an **RRC Connection Request** message on CCCH. Parameters: Initial UE Identity, Establishment cause.

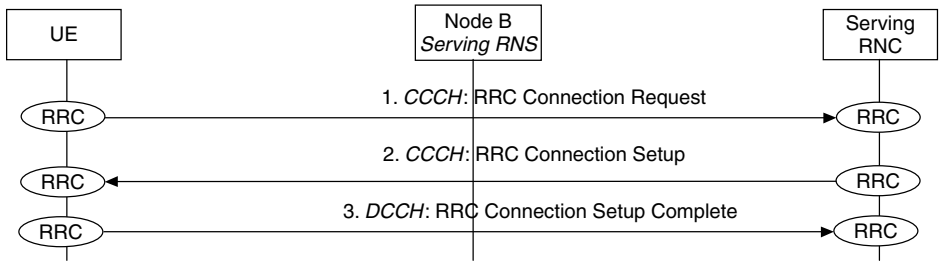

Figure 5.12 RRC Connection Establishment Procedure – Network Element View

2. The SRNC decides to use RACH/FACH for this RRC connection and allocates both U-RNTI and C-RNTI identifiers. Message **RRC Connection Setup** is sent on CCCH. Parameters: Initial UE Identity, U-RNTI, C-RNTI, etc.
3. The UE sends **RRC Connection Setup Complete** on a DCCH logical channel mapped on the RACH transport channel. Parameters: Integrity information, Ciphering information, UE radio access capability.

5.6.2 Procedure between Protocol Entities

The RRC layer in the UE leaves the Idle Mode and initiates an RRC connection establishment by sending an RRC Connection Request message using RLC-TM on the CCCH logical channel, and it is transmitted by MAC on the RACH transport channel (that is, on CCCH/L:RACH/T:PRACH/P) [3].

On the UTRAN side, upon reception of the RRC Connection Request, the RRC layer performs admission control (to be described in the next chapter), assigns a U-RNTI and C-RNTI for the RRC connection and selects radio resource parameters (such as transport channel type, transport format sets, etc.) to configure DCCH/L for the UE. Furthermore, the UTRAN decides whether the UE should enter Cell_FACH or Cell_DCH state of the Connected Mode. If the UE is to enter the Cell_DCH state and a DCH/T is to be established, CPHY-RL-Setup and CPHY-TrCH-Config request primitives are sent to the Node B involved in the channel establishment. The physical layer operation is started and confirmation primitives are returned from the Node B. The UTRAN RRC now transmits an RRC Connection Setup message using RLC-UM on CCCH/L logical channel (CCCH/L:FACH/T:SCCPCH/P). The message includes parameters including the RNTI and RRC State Indicator (which indicates whether the UE should enter Cell_FACH or Cell_DCH state).

Upon reception of the RRC Connection Setup message, the RRC layer in the UE configures the L1 and L2 using these parameters to locally establish the DCCH logical channels. In case of DCH, L1 indicates to UE-RRC when it has achieved synchronization. RLC links are locally established on both sides. The establishment can be mapped on either RACH/FACH or DCH by MAC. When the UE has established the RLC links, it transmits an RRC Connection Setup Complete message to the network using RLC-AM on the DCCH/L.

While the UE is in connected mode, if the UTRAN sends an 'RRC Connection Release' to the UE, then the signaling link and all radio bearers will be released, and the UE will return to Idle Mode.

Figure 5.13 illustrates the details of these steps.

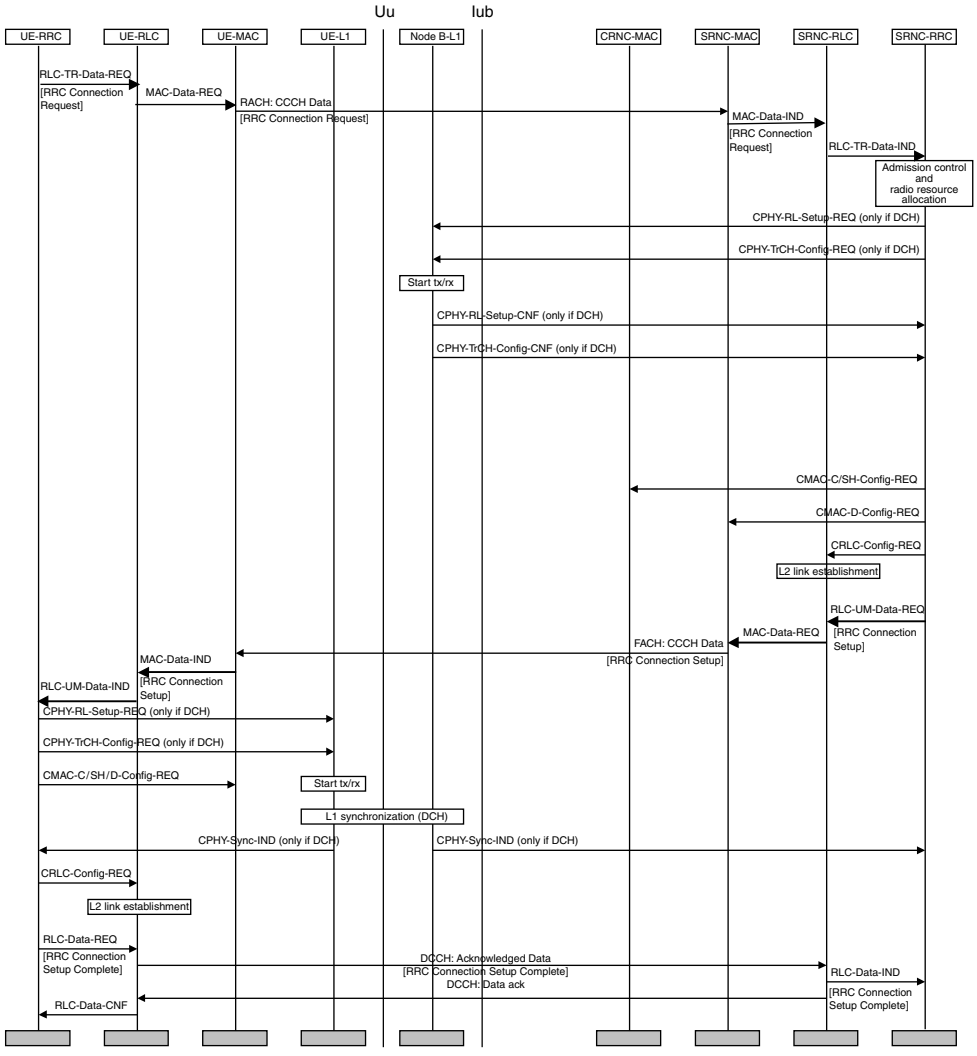

Figure 5.13 RRC Connection Establishment Procedure – Protocol Entity View

5.7 RAB/RB ESTABLISHMENT PROCEDURES

The Radio Access Bearer Establishment procedure is executed when the Core Network (CN) wants to set up a bearer service for a specific user. This can be triggered by the user, in which case the user sends a NAS message (by means of the RRC Direct Transfer procedure) to the CN requesting the bearer service or by the CN (e.g., for an incoming call).

As previously explained, the Radio Access Bearer (RAB) is divided into Radio Bearer (RB) Service and an Iu Bearer Service, with one or more (up to 8) RBs per RAB. For example, 3 RBs are used to support a voice RAB. Each RB can be on a dedicated transport channel (DCH/T) or on common transport channels (RACH/T – FACH/T). The

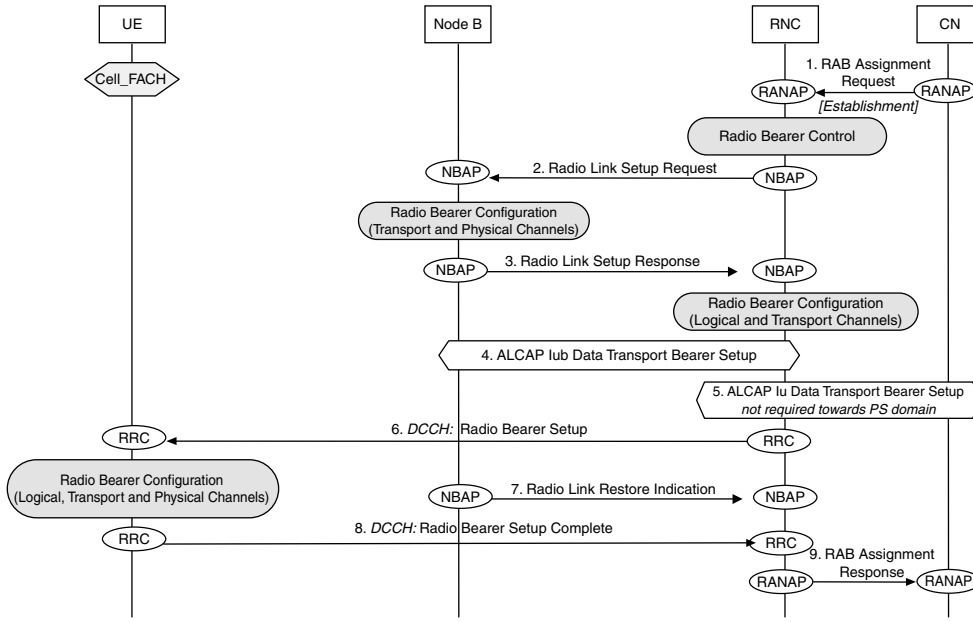

Figure 5.14 Example RAB Establishment Procedure – Network Element Viewpoint

UE is assumed to be in the Connected Mode, in either Cell_FACH or Cell_DCH states. The details of the procedure depend upon the RRC state of the UE as well as dedicated/common nature of the RB.

Shown in Figure 5.14 is the procedure of how a RAB is established when the UE is in Cell_FACH state and RB is on a dedicated transport channel (DCH/T) [4]. For simplicity, the SRNC and CRNC functions are assumed to be collocated in a single RNC. The shaded round boxes indicate Processing Functions to be implemented in the appropriate Network Element.

The following details the steps involved in the RAB establishment procedure:

1. CN initiates establishment of the radio access bearer with RANAP **RAB Assignment Request** message. Parameters: RAB parameters, Iu Transport Association, etc.
2. RNC examines the RAB parameters to determine the appropriate Radio Bearer parameters via the Radio Bearer Control function. Based on the results, the RNC requests its Node-B to establish a new DCH/T by sending the **Radio Link Setup Request** message (NBAP). Parameters include: Transport Format Set, Transport Format Combination Set, Power Control information and other Physical Channel information.
3. Node B allocates resources and configures the Transport and Physical Channels for the Radio Bearer and notifies RNC with the **Radio Link Setup Response** message. Parameters: Transport layer addressing information (AAL2 address, AAL2 Binding Id) for Iub Data Transport Bearer.
4. RNC now configures the Logical and Transport channels for the Radio Bearer and initiates set-up of Iub Data Transport Bearer using ALCAP protocol. This request contains the AAL2 Binding Identity to bind the Iub Data Transport Bearer to DCH/T.

5. RNC performs mapping of the radio access bearer QoS parameters to AAL2 link characteristics and initiates set-up of Iu Data Transport bearer using ALCAP protocol (this step is not required in PS domain in which case the existing AAL5 link is used).
6. RRC message **Radio Bearer Setup** is sent by RNC to UE using RLC AM or UM mode. Parameters: Transport Format Set, Transport Format Combination Set, Radio Bearer mapping information, Physical Channel information and Power Control information.
7. Node B achieves uplink sync and notifies RNC with NBAP message **Radio Link Restore Indication**.
8. UE sets up the Radio Bearer and sends RRC message **Radio Bearer Setup Complete** to RNC after downlink synchronization is achieved.
9. RNC sends RANAP message **Radio Access Bearer Assignment Response** to CN.

Note the following:

1. The RAB parameters in the RAB Assignment Request message include:
   (a) Traffic Class (Conversational, Streaming, Interactive, Background).
   (b) Asymmetry Indicator (Symmetric Bidirectional, Asymmetric Unidirectional Downlink, Asymmetric Unidirectional Uplink, Asymmetric Bidirectional).
   (c) Max Bit Rate for UL and DL.
   (d) Guaranteed Bit Rate (for Conversational and Streaming Traffic Classes).
   (e) Ordered SDU Delivery (yes or no).
   (f) Max SDU size.
   (g) SDU Transfer Delay (for Conversational and Streaming Traffic Classes).
   (h) SDU Priority (for Interactive Traffic Class).
   (i) SDU Error Rate.
   (j) Bit Error Rate.
2. The Radio Bearer Control function examines the RAB parameters, takes into account UE capabilities and maps them into Radio Bearer Parameters, which include:
   (a) RLC: Mode, SDU size.
   (b) Logical Channels: Type and Identity.
   (c) MAC: Priority (MLP).
   (d) Transport Channels: Type, Identity, Transport Format Set (Transport Block Size, Number of Transport Blocks, Transmission Time Interval, Error Coding Type, Error Coding Rate, Rate Matching Parameter, CRC size).
   (e) CCTrCH: Multiplexing into CCTrCH, Transport Format Combination Set.
   (f) Physical Channels: Timeslots, Codes (and implicitly Spreading Factors), Power Control Information.

In Figure 5.15, the details of the RB establishment from Radio Interface Protocols viewpoint are illustrated [3]. Since the figure is intended to describe Radio Interface related messages and primitives only, details related to UTRAN transport are not shown. For example, it does not show that the CPHY primitives from the SRNC-RRC to Node B-L1 are transported using the NBAP protocol and messages.

The Radio Bearer Establishment is initiated when an RB Establish Request primitive is received from the DC-SAP on the network side of the RRC layer. This primitive contains a bearer reference and QoS parameters. Based on these QoS parameters, L1 and L2 parameters are chosen by the RRC entity on the network side.

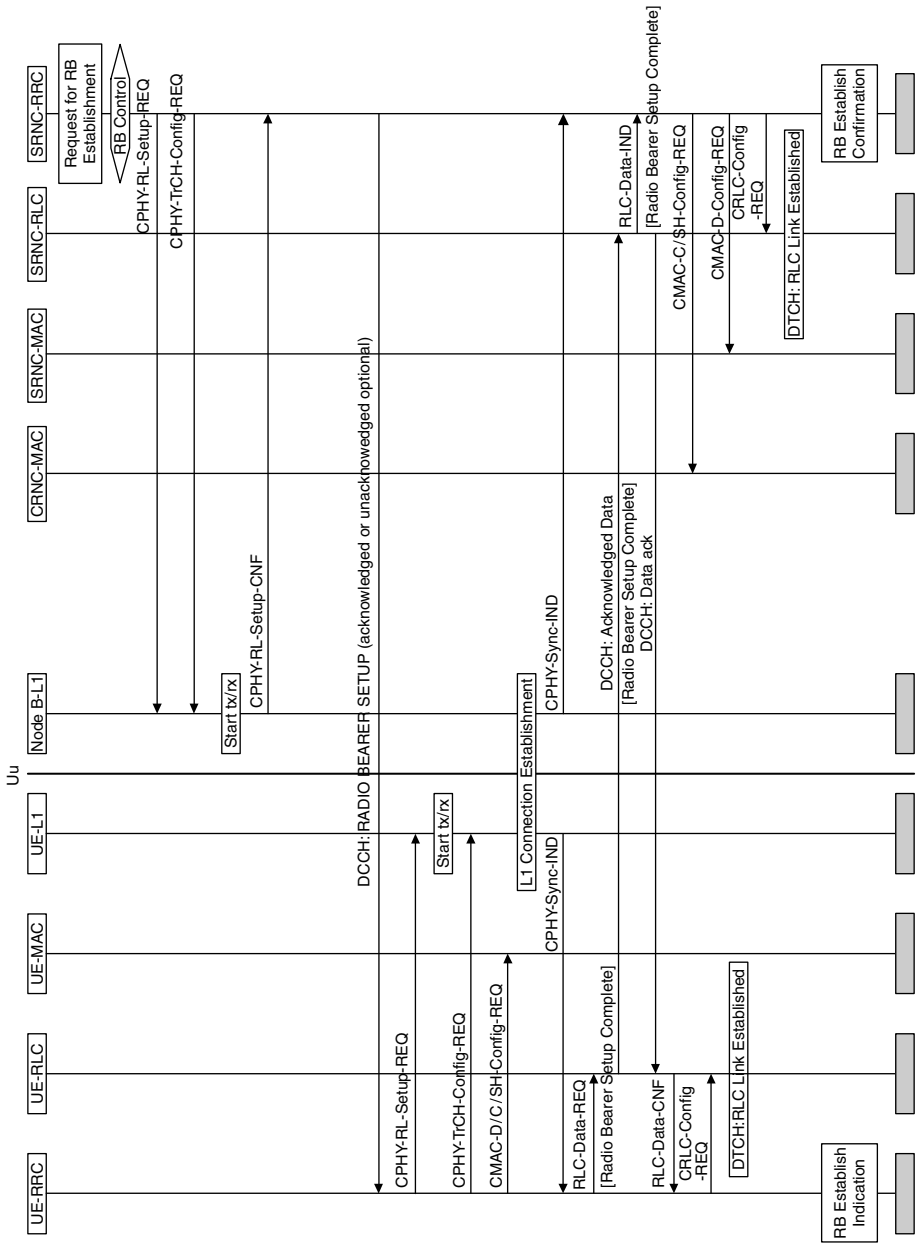

Figure 5.15 Radio Bearer Establishment Procedure

The physical layer processing on the network side is started with the CPHY-RL-Setup request primitive issued to the applicable Node B. After setting up L1 including the start of Tx/Rx in Node B, the NW-RRC sends a RADIO BEARER SETUP message to its peer entity (acknowledged or unacknowledged transmission optional for the NW). This message contains L1, MAC and RLC parameters. After receiving the message, the UE-RRC configures L1 and MAC.

When L1 synchronization is indicated, the UE sends a RADIO BEARER SETUP COMPLETE message in acknowledged-mode back to the network. The NW-RRC configures MAC and RLC on the network side.

The MAC and RLC in the RNC should be configured before the receipt of the Radio Bearer Setup Complete, actually before the Radio Bearer Setup message is sent to the UE. If the procedure is unsynchronized, as soon as the UE receives the RB Setup message, the UE can start sending data on the UL, so the UTRAN must be ready to receive data (MAC and RLC must be configured).

After receiving the confirmation of the RADIO BEARER SETUP COMPLETE, the UE-RRC creates a new RLC entity associated with the new radio bearer. The applicable method of RLC establishment may depend on RLC transfer mode.

Finally, an RB Establish Indication primitive is sent by UE-RRC and an RB Establish Confirmation primitive is issued by the RNC-RRC.

5.8 RAB/RB MANAGEMENT PROCEDURES

In this section, we describe how a Radio Access Bearer and a Radio Bearer may be modified during the course of a connection. Such a need may arise because of the Application requirements or Radio Resource Availability in a cell or during a handover to a new cell with different Radio Resources. The procedure is depicted in Figure 5.16 [4]. It shows the case of the CN triggering a modification of a RAB, for example, modifying Transport Format. RAB/RB modifications may also be triggered by the CRNC, as a part of dynamic radio resource management.

The following steps detail modification of a Radio Access Bearer:

1. CN initiates modification of the Radio Access Bearer with RANAP message Radio Access Bearer Assignment Request. Parameters: parameters to be modified at lower level, e.g. Maximum Bit Rate.
2. Processing Function: SRNC chooses which parameters (lower level) ought to be modified and what kind of procedure has to start up (i.e. Radio Bearer Reconfiguration for RRC).
3. SRNC starts an Iu Data Transport Bearer Modification between the CN and the SRNC using the ALCAP protocol with AAL2 bindings carried by radio access bearer assignment message (this step is not required towards PS domain). This has to be done before Radio Reconfiguration itself because the transport bearer must be ready when the radio channel will be ready.
4. SRNC initiates Modification of Iub Data Transport Bearer.
5. SRNC requests its Node B to prepare modification of DCH carrying the Radio Access Bearer (**Radio Link Reconfiguration Prepare**). Parameters: Transport Format Combination Set, Time Slots, User Codes, etc.

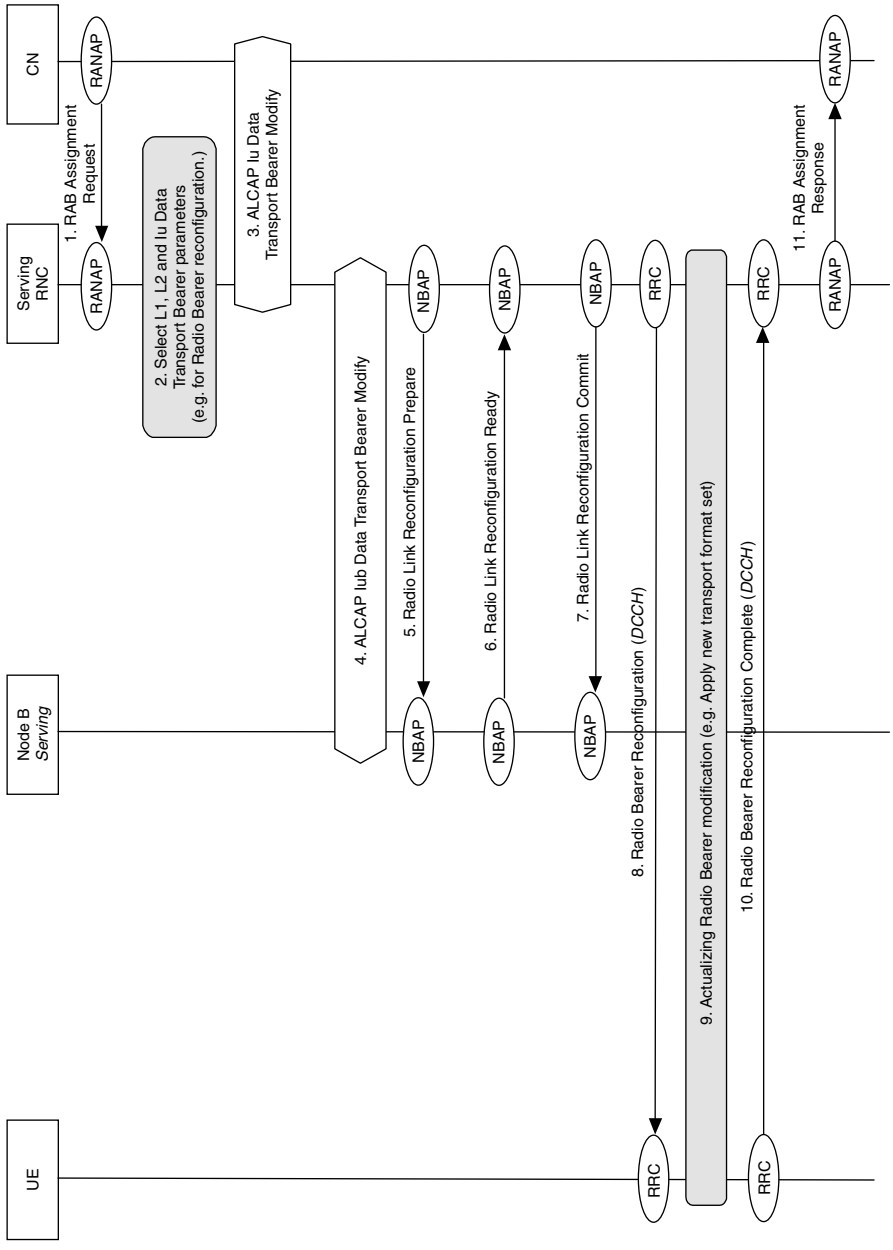

Figure 5.16 RAB Modification – Network Element Viewpoint

6. Node B notifies SRNC that modification preparation is ready (**Radio Link Reconfiguration Ready**).
7. NBAP message **Radio Link Reconfiguration Commit** is sent from SRNC to Node B with the activation time (if a 'synchronized' procedure).
8. RRC message **Radio Bearer Reconfiguration** is sent by SRNC to UE using RLC in AM or UM mode. The Radio Bearer Reconfiguration Message includes parameters related to Transport Channels, Physical Channels, etc. They include RRC Transaction Identifier, RRC State Indicator, RLC Size, MAC Logical Channel Priority, Reconfigured UL/DL Transport Channel Information (Type, Channel Identity, TFS), and Physical Channel Information. The activation time is also sent if of a synchronized procedure.
9. Both UE and Nodes B actualize modification of DCH (i.e. apply a new transport format).
10. UE sends RRC message **Radio Bearer Reconfiguration Complete** to SRNC.
11. SRNC acknowledges the modification of radio access bearer (**Radio Access Bearer Assignment Response**) to CN.

In Figure 5.17, we illustrate the Radio Bearer Reconfiguration as implemented by the various Radio Interface Protocol entities in the UTRAN and the UE [3]. After the receipt of a RADIO BEARER RECONFIGURATION from the RNC-RRC (acknowledged or unacknowledged transmission optional for the network), the UE executes the modifications on L1 and L2. Upon receipt of a RADIO BEARER RECONFIGURATION COMPLETE message from the UE-RRC, the NW-RRC executes the modifications on L1 and L2. Finally, the old configuration, if any, is released from Node B-L1.

As a variation, the configuration of network side L1, MAC, etc. may be performed prior to receiving the COMPLETE message, so that the UTRAN is ready to receive any data that UE may send immediately following the sending of the COMPLETE message.

Note that Radio Bearer Reconfiguration involves, in general, reconfiguration of Transport Channel and Physical Channel parameters. However, in some cases, it is useful to reconfigure only the Transport or Physical Channels. An example scenario is when there is excessive interference in the assigned timeslot, which could be reduced by changing the timeslot for the physical channel. In this case, a simple Physical Channel Reconfiguration procedure may be invoked without involving the CN, rather than a full-blown Radio Bearer reconfiguration procedure.

In the following, we illustrate an example of a procedure for a switch from common channels (CELL_FACH) to dedicated (CELL_DCH) channels [3]. In the UE the traffic volume measurement function decides to send a MEASUREMENT REPORT message to the network. (The network configures whether the report should be sent with acknowledged or unacknowledged data transfer.) In the network, this measurement report could trigger numerous different actions. For example the network could do a change of transport format set, channel type switching or, if the system traffic is high, no action at all. In this case a switch from CELL_FACH to CELL_DCH is initiated.

First, the modifications on L1 are requested and confirmed on the network side with CPHY-RL-Setup primitives. The RRC layer on the network side sends a PHYSICAL CHANNEL RECONFIGURATION message to its peer entity in the UE (acknowledged or unacknowledged transmission optional to the network). This message is sent on DCCH/L

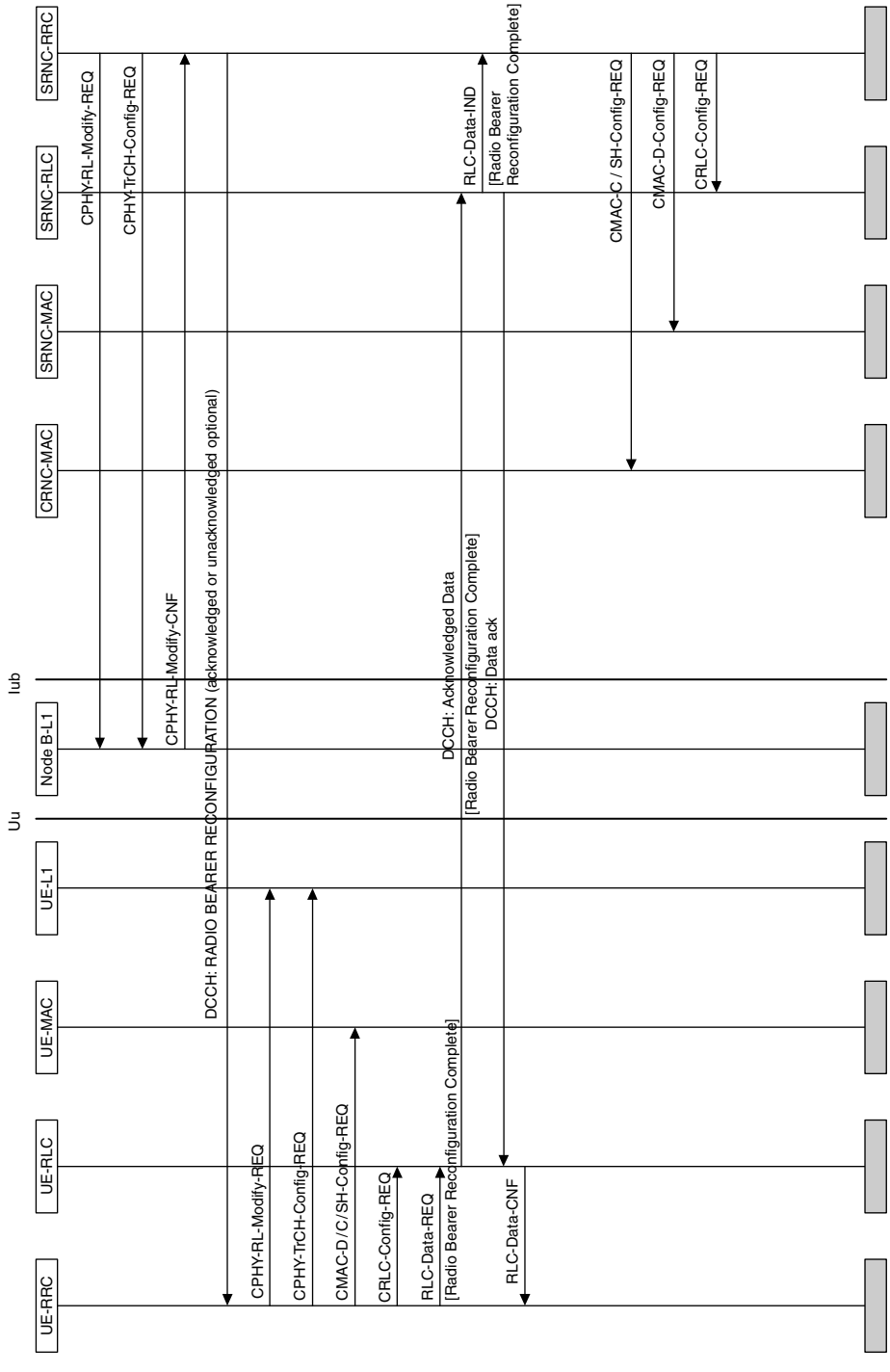

Figure 5.17 RB Reconfiguration – Radio Interface Protocol Viewpoint

mapped to FACH/T. The message includes information about the new physical channel, such as codes and the period of time for which the DCH is activated (This message does not include new transport formats. If a change of these is required due to the change of transport channel, this is done through the separate procedure Transport Channel Reconfiguration.)

When the UE has detected synchronization on the new dedicated channel, L2 is configured on the UE side and a PHYSICAL CHANNEL RECONFIGURATION COMPLETE message can be sent on DCCH/L mapped on DCH/T to RRC in the network, see Figure 5.18. Triggered by either the NW CPHY_sync_ind or the L3 complete message, the RNC-L1 and L2 configuration changes are executed in the NW.

As stated before, the configuration of network side L1, MAC, etc. may be performed prior to receiving the COMPLETE message, so that the UTRAN is ready to receive any data that UE may send immediately following the sending of the COMPLETE message.

5.9 POWER CONTROL PROCEDURES

Power Control is used to adjust the transmit power of both UE and Node B in order to achieve a desired Quality of Service with minimum transmit power, thus limiting the interference level within the system.

Power Control is useful for both Downlink and Uplink, although the reasons are different. In the Uplink direction, Power Control is useful – and necessary – to counter the near–far problem and to conserve the battery power consumption. The near-far problem refers to the signal received by BS from a Far user experiencing excessive interference from the signal received from a Near user. By decreasing the transmit power of the Near user, the excessive interference can be reduced to normal levels. In the Downlink direction, however, there is no Near–Far problem. Assuming that transmitted signals to a Near and a Far User have equal power, the signal received by the Near User will have equal powers of the desired signal and the interfering signal. Moreover, all DL transmitted signals are Orthogonal at BS (although some of it may be lost by the time they arrive at the UE due to multipath). Therefore, the reason for PC is to overcome effects of interference from neighboring BSs.

As previously stated, the purpose of Power Control is to achieve a desired QoS by adjusting the transmitted power. The desired QoS is measured in terms of block error rate (BLER) at the Physical layer. The BLER requirements at the Transport Channel level are translated into SIR per CCTrCH and the transmitted power is controlled in order to maintain a desired SIR in the ways described below:

- Inner and Outer Loop PC: The transmit power level of UL and DL dedicated physical channels are dynamically controlled based on QoS measurements. Their power control can be divided into two processes operating in parallel: inner loop power control and outer loop power control.

  The objective of the inner loop PC is to keep the received SIR of the DPCHs assigned to a CCTrCH as close as possible to a target SIR value for the CCTrCH, while the outer loop PC is used to keep the received BLER of each TrCH within the CCTrCH as close as possible to its target quality BLER. The outer loop PC provides a target SIR per CCTrCH to be used for the inner loop.

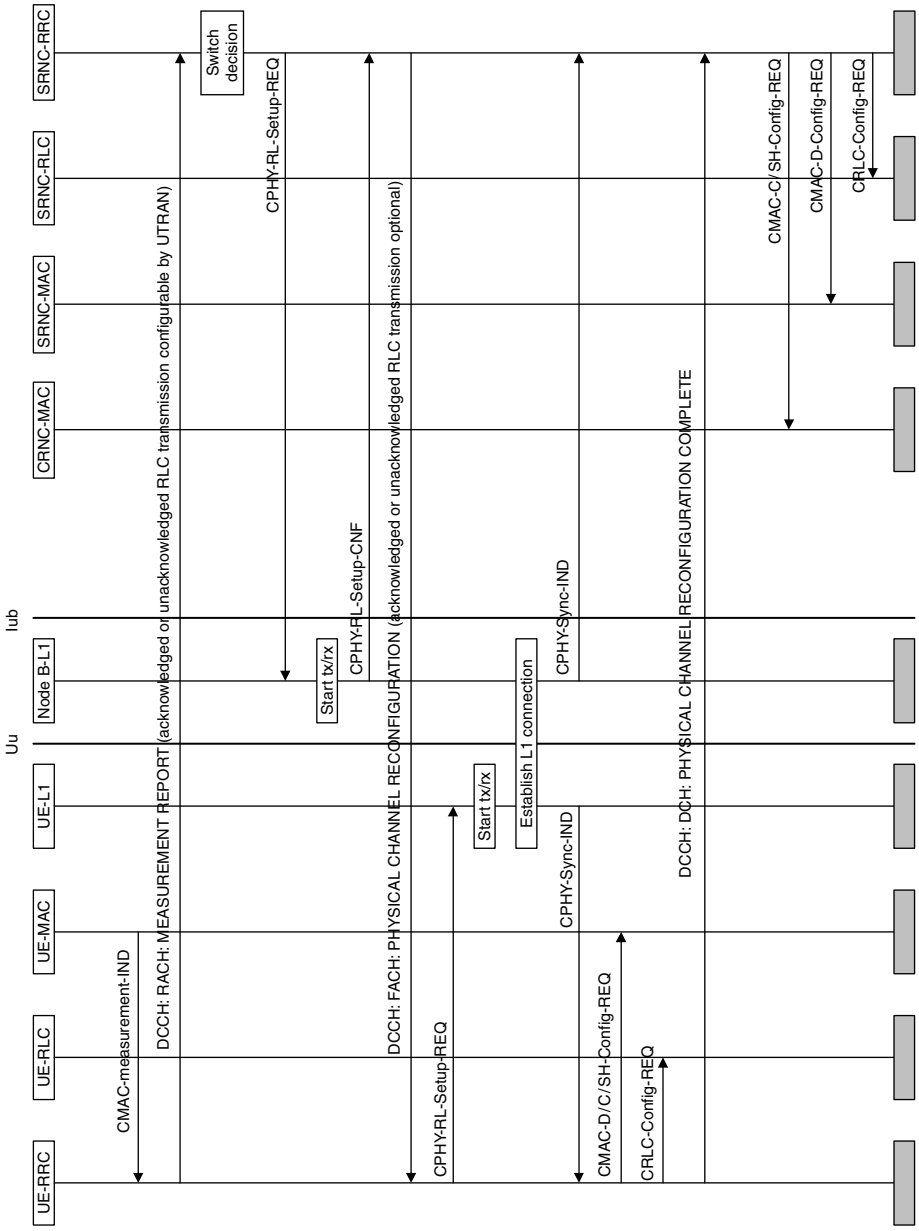

Figure 5.18 Physical Channel Reconfiguration – Radio Interface Protocol Viewpoint

The inner loop works on a frame-by-frame basis whereas the outer loop works on a longer time scale.

- Closed and Open Loop PC: Closed Loop PC refers to a control process, which involves both the UE and the UTRAN with power control information being fed back between the UE and the UTRAN. On the other hand, Open Loop PC refers to a process where the power is controlled autonomously by either the UE or the UTRAN, for UL or DL power control respectively.
- Channel Pairing for Closed Loop PC: Since Closed Loop PC requires feedback between the UE and the UTRAN, a feedback transport channel must be paired with the CCTrCH that is being power controlled. For example, Closed Loop PC for a DL CCTrCH will require a paired UL CCTrCH to send the feedback information. Although it is simpler to pair a power-controlled CCTrCH and a feedback CCTRCH, it is sometimes more efficient to share the feedback CCTrCH for multiple power controlled CCTRCHs.
- DL PC: The principles of DL transmit power control are shown in Figure 5.19. As shown in Figure 5.19, the inner loop is a closed loop technique, whereas the outer loop is an open loop technique. Open loop techniques are possible because the uplink and downlink share the same frequency band, so that radio channel characteristics are reciprocal.

  In the inner loop, the UE performs SIR measurement of each DL DPCH assigned to a DL CCTrCH and compares the measured SIR with the target SIR for the CCTrCH in order to generate power control commands that are transmitted to Node B. Then Node B receives these commands and adjusts its transmit power up or down accordingly.

  In the outer loop, the UE adjusts the target SIR autonomously (i.e. open loop) based on CRC check measurements (which are an indication of BLER).
- Initialization: For each dedicated DL CCTrCH, the SRNC provides initial power control parameters (including target BLER and Step size) to the UE via RRC signaling and to Node B via internal UTRAN signaling. The UE outer loop sets the initial target SIR based on the initial parameters received. Figure 5.20 shows the sequence of events involved in DL Power Control.

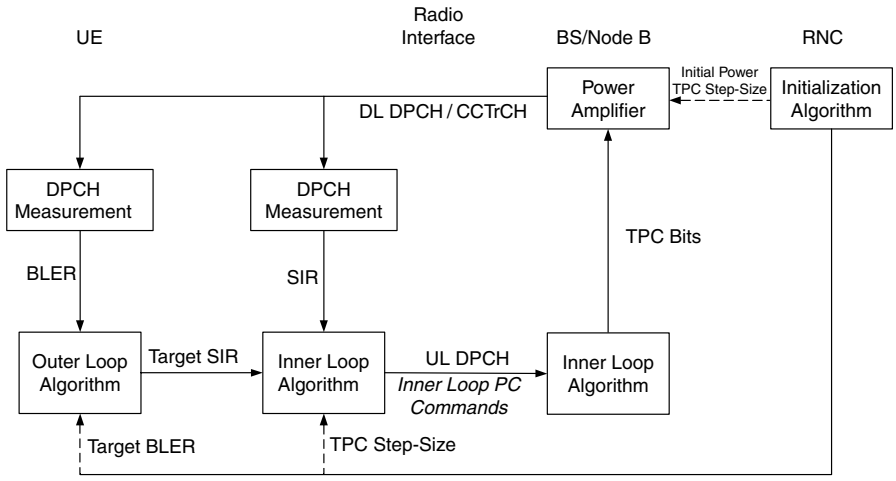

Figure 5.19 Downlink Power Control Scheme

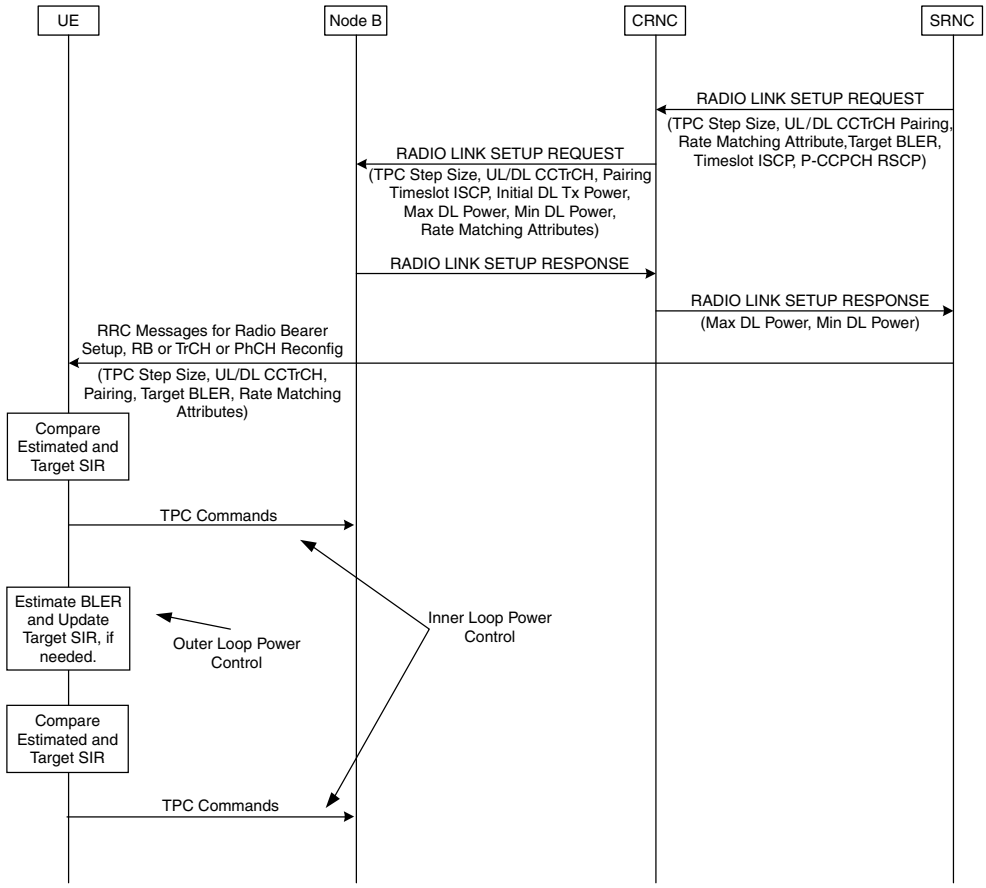

Figure 5.20 Downlink Power Control Procedure

- Uplink PC: The principles of Uplink power control are depicted in Figure 5.21. Clearly, the outer loop PC uses a closed loop technique, because it involves a feedback mechanism between UTRAN and the UE. In contrast, the inner loop PC uses an open loop technique, because it is self-contained within the UE.

  For dedicated channels, the uplink power control outer loop is mainly the responsibility of the SRNC. For each dedicated UL CCTrCH, an initial value of target SIR (determined by the CRNC and passed to the SRNC) is provided to the UE (via RRC signaling) when the CCTrCH is first established. The SRNC then updates the target SIR based on measurement of uplink CCTrCH quality. CCTrCH quality is defined by the quality (BLER) of the CCTrCH's transport channels. TrCH BLER is calculated by the SRNC based on the physical layer CRC results of the transport channels. The CRC results are passed from Node B to the SRNC via the Iub and Iur interfaces as part of the frame protocol. Updated target SIR is signaled by the SRNC (via RRC signaling) to the UE whenever an outer loop update occurs.

  The UE's inner loop measures the serving cell's PCCPCH/P RSCP each frame and calculates the pathloss between Node B and the UE. Based on the pathloss, UTRAN

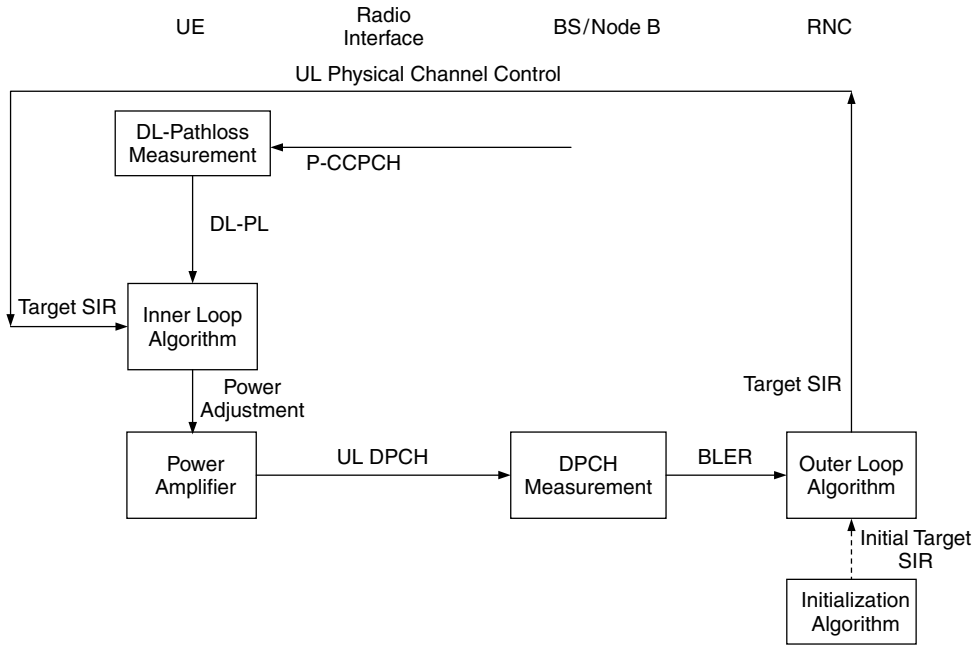

Figure 5.21 Uplink Power Control Scheme

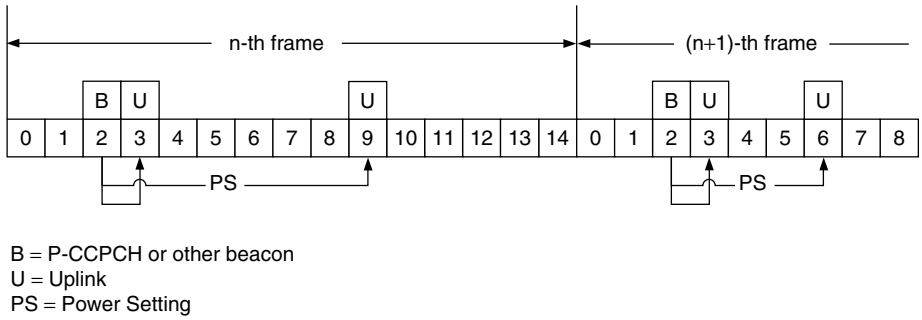

Figure 5.22 Working of the Inner Loop Uplink Power Control

signaled values of UL Timeslot interference, and UTRAN-signaled target SIR, the UE calculates its transmit power. Figure 5.22 illustrates the inner loop PC concept. The PCCPCH measurements are done in timeslot 2 and used to set the power levels of the two uplink timeslots 3 and 9.

- PC for Common Channels: In DL, the transmit power level of the PCCPCH and SCCPCH, respectively, is determined by the C-RNC during cell setup process, and can be changed based on network determination on a slow basis. Specifically, the power of PCCPCH (broadcast channel) is a constant and can range from −15 to +40 dBm. The powers of Primary SCH, Secondary SCH, PCH, PICH and FACH are specified individually relative to the PCCPCH power. The power of RACH is controlled dynamically using the Open Loop technique.

5.10 UE TIMING ADVANCE PROCEDURES

In large cells, the propagation delay between a UE and Node B may vary considerably depending on the location of the UE. In such a case, the UTRAN may decide to apply the so-called Timing Advance Procedure. Essentially, the UTRAN commands each UE to advance its transmission relative to its own timing reference, so that, after the propagation delay, all UE transmissions are aligned in time when received by Node B [1].

Figure 5.23 illustrates the Timing Advance concept. Recall that the Network transmits (marked as NW-TX in the figure) the SCH pulses, which are offset by T-offset from the timeslot boundary, see also Chapters 3 and 4. This SCH pulse is received by the UE (marked as UE-RX in the figure) after certain propagation delay. Based on the measured SCH pulse, the UE estimates the T-offset and hence the Timeslot Boundary. In order to compensate for the propagation delay, UE advances the estimated Timeslot Boundary by 2*Estimated Propagation Delay. Now, UE transmissions which start at its local time-advanced Timeslot Boundary will arrive at the Network after a propagation delay, so that they are aligned with the Timeslot Boundary at the network.

Whether or not Timing Advance is enabled in a cell is broadcast on BCCH/L. Typically, the Timing Advance is enabled in all but pico-cell environments where the limited distance

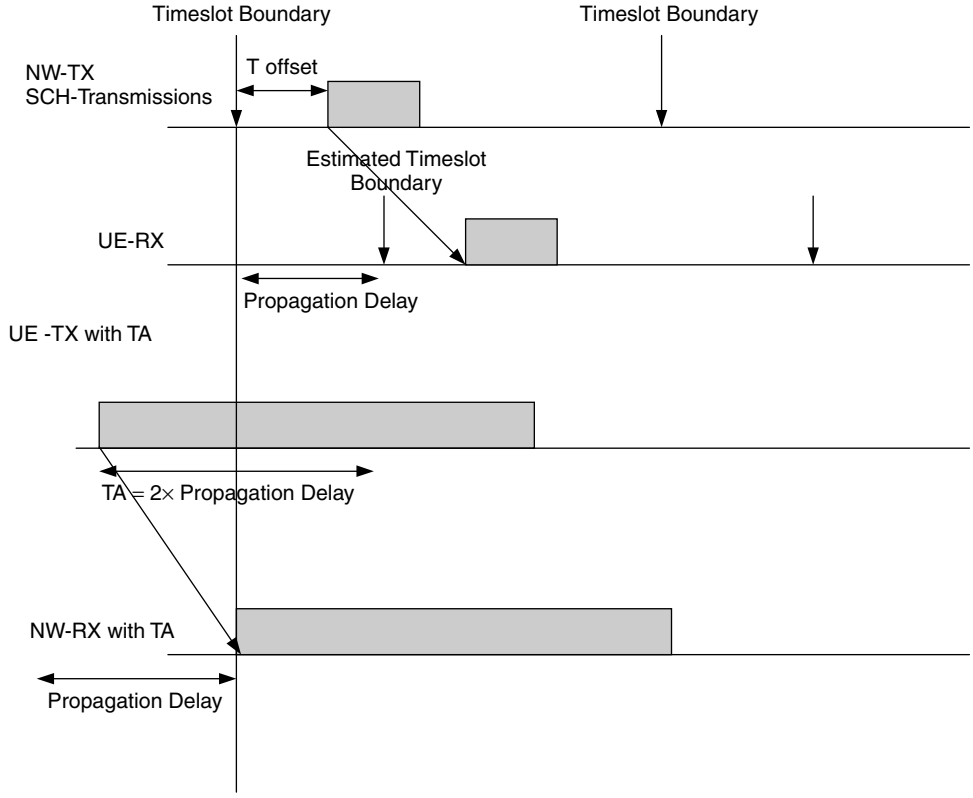

Figure 5.23 UE Timing Advance Concept

between UE and Node B/cell does not introduce propagation delays significant enough to require it.

The initial value for timing advance (TA_{phys}) will be determined in the UTRAN by measurement of the timing of the PRACH/P. The required timing advance is represented as a 6-bit number (0–63) 'UL Timing Advance' TA_{ul}, being the multiplier of 4 chips, which is nearest to the required timing advance (i.e. $TA_{phys} = TA_{ul} \times 4$ chips).

When Timing Advance is used, the UTRAN will continuously measure the timing of a transmission from the UE and send the necessary timing advance value to the UE. On receipt of this value, the UE will adjust the timing of its transmissions accordingly in steps of ±4 chips. The transmission of TA values is done by means of higher layer messages. Upon receiving the TA command, the UE will adjust its transmission timing according to the timing advance command at the frame number specified by higher layer signaling. The UE is signaled the TA value in advance of the specified frame activation time to allow for local processing of the command and application of the TA adjustment on the specified frame. Node B is also signaled the TA value and radio frame number that the TA adjustment is expected to take place.

5.10.1 Initial Timing Advance

Initialization refers to the establishment of the first Timing Advance behavior for a given UE when establishing a USCH or DCH connection. In the initial RACH burst, there is no application of Timing Advance but it is provided from then on subsequent USCH or DCH bursts. The initial value for the Timing Advance is determined from one or more measurements of Time Delay (TD) of the RACH burst, and signaled to, and implemented in the UE Layer 1 prior to the commencement of user plane traffic. Figure 5.24 shows the block level representation of the RACH burst transmission, Timing Deviation (TD) measurement, and initial TA computation. Omitted for the sake of simplicity is the RNC signal back to the Node B of Timing Advance signaled to the UE.

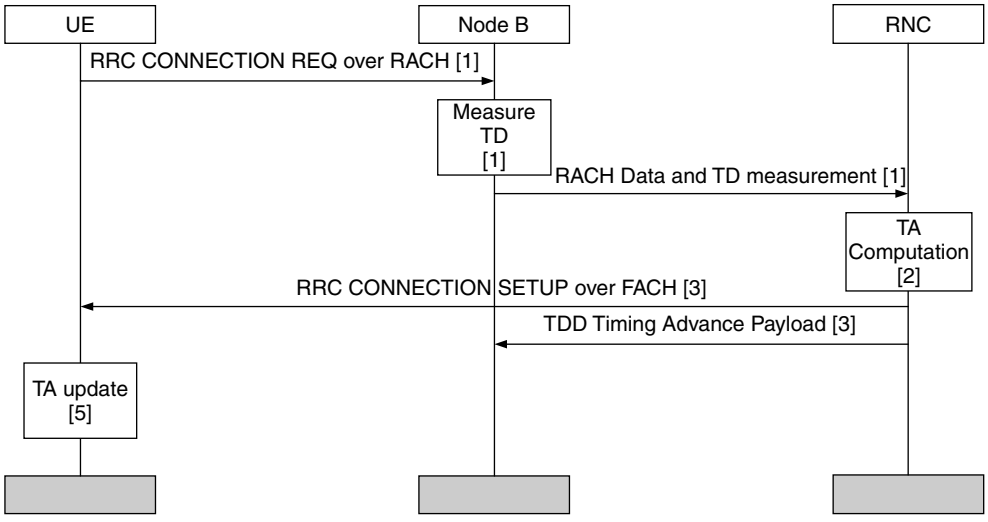

Figure 5.24 Initial TA Procedure

The following details the steps involved in the Initial Timing Advance procedure:

1. The UE signals a RRC CONNECTION REQ over the CCCH/L logical channel over RACH/T. Node B measures TD from the RACH burst. The TD measurement passes from Layer-1 in Node B, through MAC-c/sh in the RNC to the RRC.
2. The RRC in the RNC performs the Timing Advance Calculation.
3. Assuming RRC Connection establishment on DCH, the SRNC executes a Radio Link Setup procedure with Node B, and then the SRNC RRC sends an RRC CONNECTION SETUP message to the UE over FACH/T. This signal contains the Timing Advance information including the CFN for activation. The information is also forwarded to the Layer 1 in the Node B via the frame protocol for possible use.
4. The UE RRC passes the Timing Advance to Layer 1 with the CFN activation time.
5. Layer 1 implements the new Timing Advance if the CFN value is within an acceptable range. Establishment of the user plane may now be performed and the steady-state scenario becomes applicable.

5.10.2 Steady-State Timing Advance

The steady-state condition is said to exist for a UE, which is in the Cell_DCHstate or Cell FACH state with USCH/T. Such a UE would have a continuous or regular exchange of data over the air. Figure 5.25 illustrates the TD measurement and TA update signaling flows for DCH/T and USCH/T channels. Note that the TD is carried apart from the uplink data for DCH/T and together with the data for USCH/T. Not shown in the figure is the additional fact that the computation of the TA is performed in the SRNC for DCH/T and in the CRNC for USCH/T. Also omitted for the sake of simplicity is the RNC signal back to Node B of Timing Advance signaled to the UE.

The following details the steps involved in the Steady-State Timing Advance procedure:

1. A USCH or uplink DCH transmission from the UE causes the TD to be measured in Node B. For USCH, the TD and an indication of the associated UE are passed on to the CRNC RRC along with the PDU via the MAC-c/sh. For DCH, the TD is passed separately from the DCH Data directly to the SRNC RRC without MAC intervention.
2. For USCH/T, the MAC-c/sh processes TD measurements in accordance with the criteria set forth by the RRC. For example, a threshold reporting could be used. That is, when the TD is outside a window imposed by the RRC, indicating a significant change in the two-way propagation delay time since the last Timing Advance update, the MAC-c/sh sends a CMAC_MEASUREMENT_IND to the RRC.
3. For both USCH/T and DCH/T, the RRC performs the Timing Advance Computation.
4. The Timing Advance Computation results are forwarded through RRC peer-to-peer signaling to the RRC in the UE (for example, Physical Channel Reconfiguration, Transport Channel Reconfiguration, Radio Bearer Reconfiguration or Uplink Physical Channel Control). The same information is also sent to Layer 1 in Node B for possible use.
5. Within the UE, RRC Inter-layer primitive CPHY_CONFIG_REQ indicates the new Timing Advance and the CFN when the new value is to take effect in Layer 1. The Timing Advance is appropriately applied by Layer 1 for all future uplink transmissions.

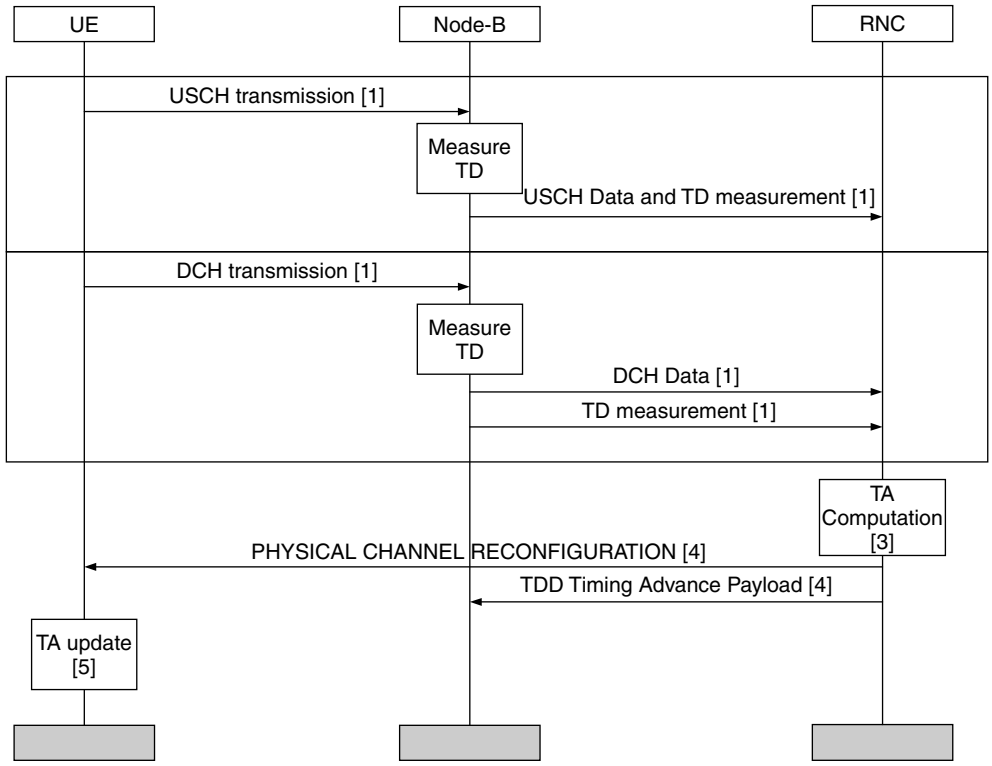

Figure 5.25 Steady-State Timing Advance Procedure

For the above procedure to work properly, it is imperative that uplink transmissions and the resulting TD measurements occur sufficiently frequently and thus prevent the UE from traveling a distance which would cause the burst to occur outside of the channel and data estimation windows.

5.11 MEASUREMENTS PROCEDURES

Measurements are performed and reported by the UE and Node B at the request of RNCs, although certain measurements are performed autonomously by the UE and Node B.

For all the UEs in a cell, the CRNC can request the set-up, modification and release of measurements via System Information (SIB 11 and SIB 12) broadcast on the BCH/T. For a specific UE, the SRNC can request measurements via the MEASUREMENT CONTROL message. (We shall refer to these measurements as Common-UE Measurements and Specific-UE Measurements respectively.) UEs perform measurements in all modes and states, but report measurements only in CELL_FACH and CELL_DCH states.

For Node B, the CRNC can request general measurements applicable to a cell or group of cells or a Node-B, called 'Common Measurements'. The CRNC or the SRNC can also request measurements that apply to a specific UE, collectively called 'Dedicated Measurements'.

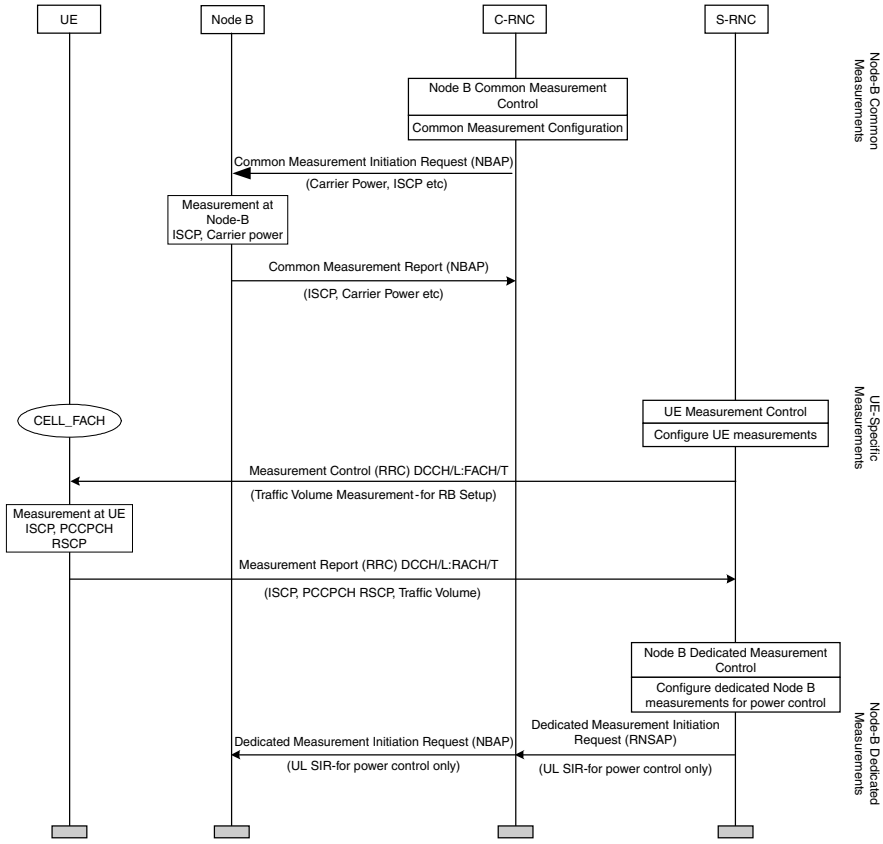

Figure 5.26 Example UE and Node B Measurement Procedures

Figure 5.26 depicts example procedures for Node B and UE measurement procedures.

5.11.1 Common UE Measurements

As mentioned earlier, UEs perform general system related measurements, the information about which is broadcast on SIB 11/12. Figure 5.27 shows the details.

5.11.2 Specific UE Measurements

Figure 5.28 shows how the Measurement Control Message can specify measurements to be performed by a specific UE.

5.11.3 Measurement Types

As shown in Figure 5.28 and Figure 5.29, the measurements can be of the following types:

1. Intra-frequency measurement.
2. Inter-frequency measurement.

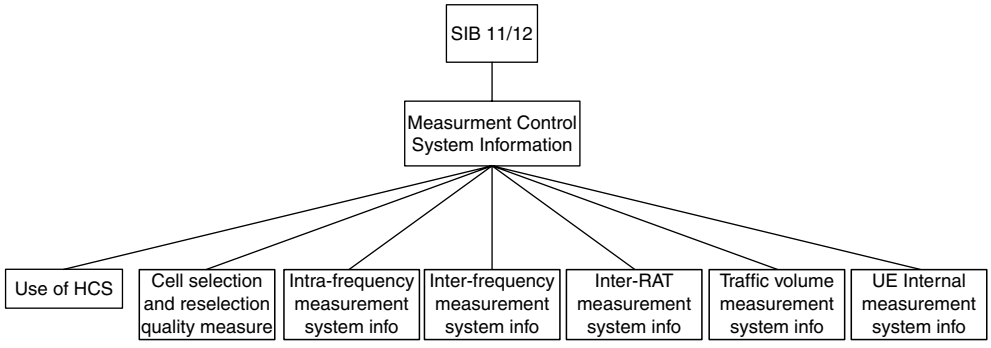

Figure 5.27 UE Measurement Control System Information

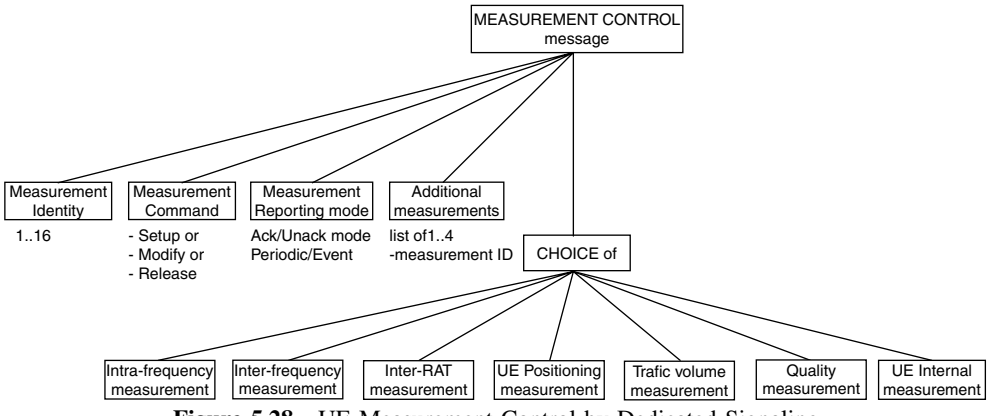

Figure 5.28 UE Measurement Control by Dedicated Signaling

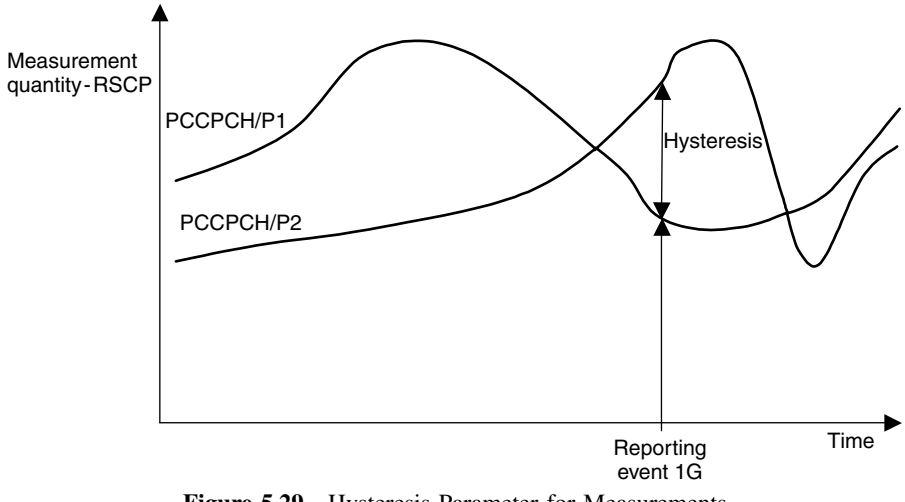

Figure 5.29 Hysteresis Parameter for Measurements

3. Inter-RAT measurement.
4. Traffic volume measurement.
5. Quality measurement.
6. UE internal measurement.
7. UE positioning measurement.

Table 5.1 shows which of these measurements are applicable in various UE states.

Table 5.1 also delineates the specific measurements involved in each of these measurement sets. Some of these are now defined briefly:

- PCCPCH/P RSCP (Received Signal Code Power): The received power on PCCPCH/P of serving or neighbor cell. The reference point for the RSCP is the antenna connector at the UE.
- Pathloss: This is based on the PCCPCH/P RSCP of the serving cell and the PCCPCH/P TX power, which is broadcast in SIB 5. It is defined as: Pathloss (in dB) = PCCPCH/P TX Power – PCCPCH/P RSCP.
- Timeslot ISCP (Interference Signal Code Power): The interference on the received signal in a specified timeslot measured on the midamble. The reference point for the ISCP is the antenna connector at the UE.
- SFN-SFN Observed Time Difference: This is the time difference of the reception times of frames from two cells (serving and target) measured in the UE and expressed in chips. It is divided into two types. Type 2 applies if the serving and the target cell have the same frame timing.
- Traffic Volume: This is typically measured for non-real-time services and consists of measuring the amount of data in RLC buffers, its average value and its variance.
- TrCh BLER: This is an estimation of the transport channel block error rate (BLER), based on evaluating the CRC on each transport block.
- GSM RSSI (Received Signal Strength Indicator): This is the wideband received power of a GSM BCCH carrier within the relevant channel bandwidth in a specified timeslot. The reference point for the RSSI is the antenna connector at the UE.
- UTRAN RSSI (Received Signal Strength Indicator): This is the wideband received power of a UTRAN DL carrier within the relevant channel bandwidth in a specified timeslot. The reference point for the RSSI is the antenna connector at the UE.
- CCTrCH SIR (Signal to Interference Ratio): This is defined as: (RSCP/ISCP)xSF, where SF is the Spreading Factor and RSCP and ISCP are as per definitions above. The reference point for the SIR is the antenna connector of the UE
- UE Transmitted Power: The total UE transmitted power on one carrier measured in a timeslot. The reference point for the UE transmitted power is the UE antenna connector.

5.11.4 Measurement Reporting Methods

The Measurement Control Message also specifies the method of measurement reporting. This can be either periodic or event triggered. In the periodic case, the amount of reporting and a reporting interval are specified. In the triggered case, a number of parameters are used to define the trigger event. They include a threshold, hysteresis, time-to-trigger. Figures 5.29 and 5.30 illustrate some of these concepts.

Table 5.1 UE States and Applicable Measurement Types

Measurement Type	Idle Mode	Connected Mode Cell_PCH/URA_PCH	Connected Mode Cell_FACH	Connected Mode Cell_DCH
Intra-frequency measurement	• PCCPCH/P RSCP (1) • Pathloss	• PCCPCH/P RSCP (1) • Pathloss	• PCCPCH/P RSCP(1) • Pathloss • Timeslot ISCP • SFN-SFN Observed Time Difference	• PCCPCH/P RSCP (1) • Pathloss • Timeslot ISCP • SFN-SFN Observed Time Difference
Inter-frequency measurement	• TDD PCCPCH RSCP (2) • FDD CPICH RSCP and CPICH Ec/Io	• TDD PCCPCH RSCP (2) • FDD CPICH RSCP and CPICH Ec/Io	• TDD PCCPCH RSCP (2) • FDD CPICH RSCP and CPICH Ec/Io	• TDD PCCPCH RSCP (2) • FDD CPICH RSCP and CPICH Ec/Io
Inter-RAT measurement	• GSM BCCH carrier strength	• GSM BCCH carrier strength	• GSM BCCH carrier strength	• GSM BCCH carrier strength
Traffic volume measurement	...	• Traffic Volume on any UL DCH or USCH (based on RLC Buffer Payload)	• Traffic Volume on any UL DCH, RACH or USCH (based on RLC Buffer Payload)	• Traffic Volume on any UL DCH, RACH or USCH (based on RLC Buffer Payload)
Quality measurement	...	...	...	• DL TrCh BLER • DL CCTrCh SIR
UE internal measurement	...	...	...	• Transmitted Power • Applied Timing Advance
UE positioning measurement	...	...	...	• Positioning method etc.

(1) of Serving Cell & Neighbor Cells broadcast on SIB 11/12
(2) 3.84 or 1.28 Mcps

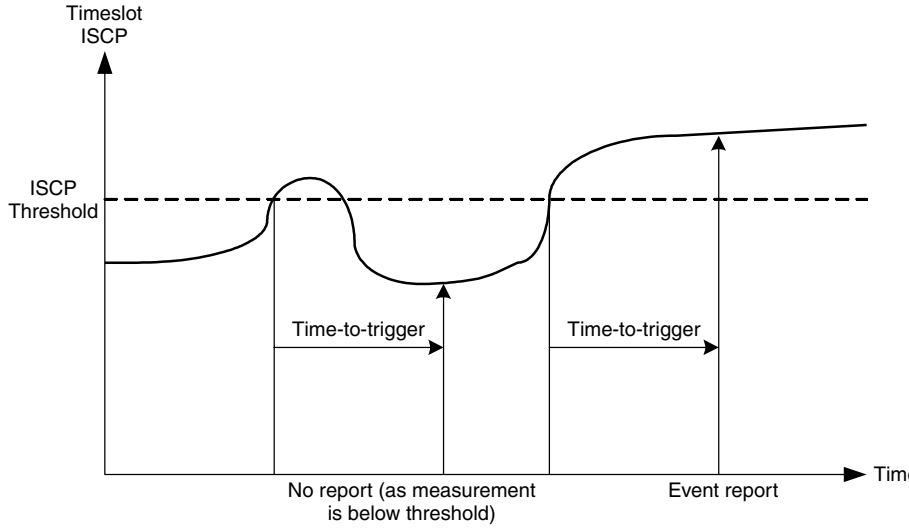

Figure 5.30 Use of Time-to-Trigger Parameter

5.11.5 Node B Measurements

As mentioned at the beginning of the section, CRNC/SRNC can request Node Bs to perform Common and/or Dedicated measurements. The following are the types of measurements:

- Common measurement types:
  - Transmitted carrier power
  - Received total wideband power
  - UL timeslot ISCP
  - Load
  - SFN-SFN observed Time Difference
  - UTRAN GPS Timing.
- Dedicated measurement types:
  - Transmitted code power
  - RSCP
  - SIR
  - Rx Timing Deviation.

As with UE measurements, these measurements can be reported periodically or triggered by an event.

5.12 CELL/URA UPDATE PROCEDURES

A cell or URA update procedure may be triggered in a variety of contexts. An example is when the UE moves into a new cell/URA in connected mode states CELL_FACH/CELL_PCH/URA_PCH. The new cell or URA may be connected to the same or different Node-B, same or different SRNC. If the associated RNC changes, the procedure involves

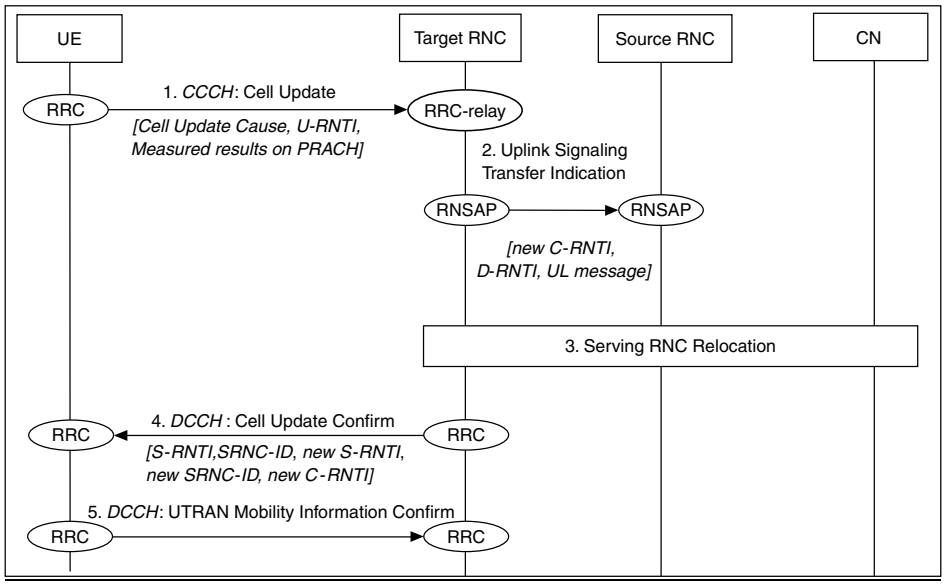

Figure 5.31 Cell Update with SRNS Relocation

the so-called 'SRNS relocation'. It is also possible not to switch to the new SRNC, but to keep the connection to the old SRNC via the new RNC (now referred to as a Drift RNC). In this case, SRNS relocation is not needed as part of this procedure.

Shown in Figure 5.31 is an example of Cell Update due to cell reselection involving SRNC relocation. The steps involved in a Cell Update are as follows:

1. UE sends a RRC message 'Cell Update' to the UTRAN, after having performed cell re-selection. Upon reception of a CCCH message from a UE, target RNC allocates a C-RNTI for the UE.
2. Controlling target RNC forwards the received message via **Uplink Signaling Transfer Indication** RNSAP message towards the SRNC. Message includes, besides target RNC-ID, also the allocated C-RNTI, which is to be used as UE identification within the C-RNC, and the D-RNTI. Upon receipt of the RNSAP message SRNC decides to perform SRNS Relocation towards the target RNC.
3. Serving RNS relocation procedure is executed (see later section), after which, the target RNC allocates new S-RNTI for the UE and becomes the new serving RNC.
4. Target RNC responds to UE by RRC **Cell Update Confirm**, including old S-RNTI and SRNC-ID as UE identifiers. Message contains also the new S-RNTI, SRNC-ID and C-RNTI.
5. UE acknowledges the RNTI reallocation by sending the RRC message **UTRAN Mobility Information Confirm**.

Shown in Figure 5.32 is an example of URA Update without SRNC relocation. Here, the target RNC and serving RNC are located separately from each other. The steps involved in a URA Update without SRNC relocation are:

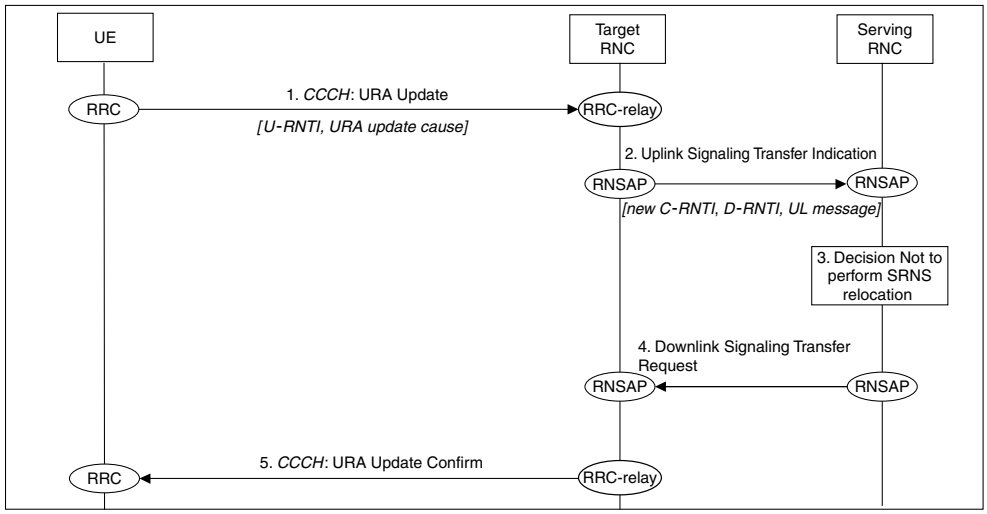

Figure 5.32 URA Update without SRNC Relocation

1. UE sends a RRC message URA Update to the UTRAN, after having made cell re-selection and determining that URA has changed.
2. Upon receipt of the message from a UE, Target RNC decodes the RNC ID and the S-RNTI. Since the UE is not registered in the target RNC, the target RNC allocates C-RNTI and D-RNTI for the UE. The Target RNC forwards the received message towards the SRNC by RNSAP **Uplink Signaling Transfer Indication** message. The message includes also the cell-ID from which the message was received and the allocated C-RNTI and D-RNTI.
3. Upon receipt of the RNSAP message SRNC decides not to perform an SRNS relocation towards the target RNC. The target RNC become C-RNC while SRNC remains unchanged.
4. SRNC sends to the Target RNC a **Downlink Signaling Transfer Request**, which includes a URA Update Confirm message.
5. The **URA Update Confirm** is forwarded to the UE (via CCCH with new RNTIs) from the target RNC.

Figure 5.33 shows the Cell Update procedure as seen between the various protocol layers of the Radio Interface (Inter-Layer Procedure).

The cell update procedure is triggered by the cell re-selection function in the UE, which notifies which cell the UE should switch to. The UE reads the broadcast information of the new cell. Subsequently, the UE RRC layer sends a CELL UPDATE message to the UTRAN RRC via the CCCH/L logical channel and the RACH/T transport channel. The RACH transmission includes the current U-RNTI (S-RNTI and the SRNC Identity).

Upon receipt of the CELL UPDATE, the UTRAN registers the change of cell. If the registration is successful it replies with a CELL UPDATE CONFIRM message transmitted on the DCCH/FACH to the UE. The message includes the current U-RNTI (S-RNTI and SRNC Identity) and it may also include new C-RNTI and/or U-RNTI (S-RNTI + SRNC Identity).

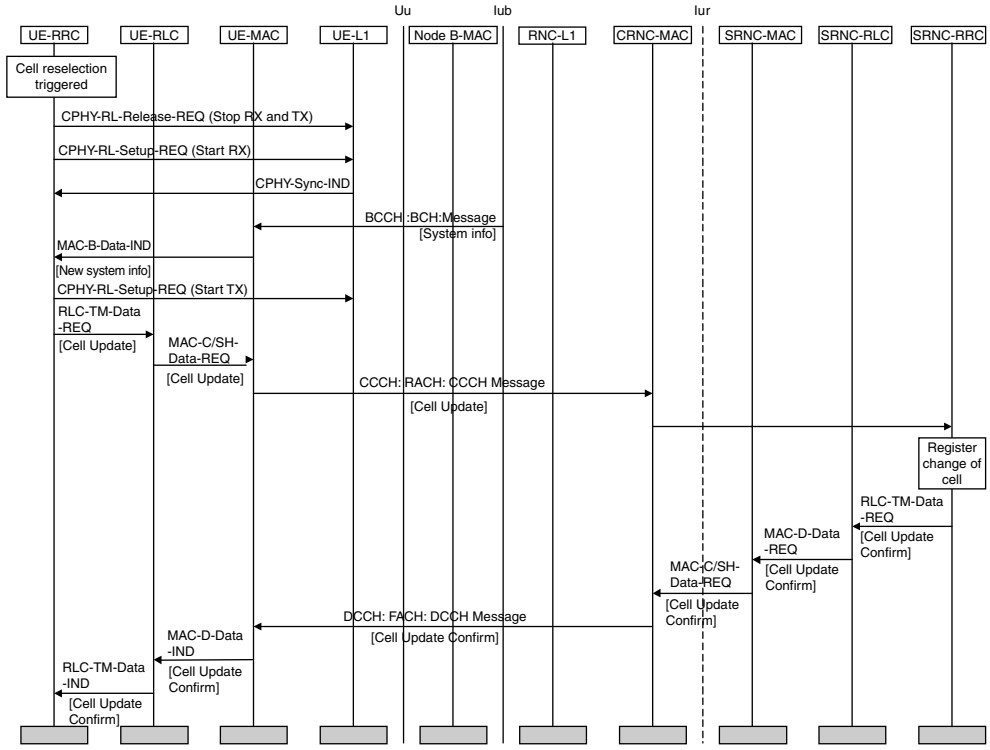

Figure 5.33 Inter-Layer Procedure for Cell Update

5.13 HANDOVER PROCEDURES

Handover is an essential function to guarantee user mobility and service QoS. As a user in CELL_DCH state moves from one cell to another, the network automatically transfers the user connection to a channel in the new cell, releasing the channel in the old cell. (In all other Connected Mode states, user mobility is handled by the Cell Reselection function.)

There are various types of handovers, including:

1. Inter-cell Intra-frequency handover.
2. Inter-Cell Inter-frequency handover.
3. Inter-RNS handover (with or without SRNS relocation).
4. Inter-mode (TDD <-> FDD) handover.
5. Inter-RAT (UMTS <-> GSM) handover.

There are two different techniques of handover: hard handover and soft handover. A *hard* handover is characterized by the UE commencing communications with a new cell after terminating communications with the old cell. A *soft* handover occurs when the UE communicates with a new cell without interrupting communications with the current serving cell. TDD only supports hard handovers.

Figure 5.34 illustrates hard handovers of type 1, 2 and 3.

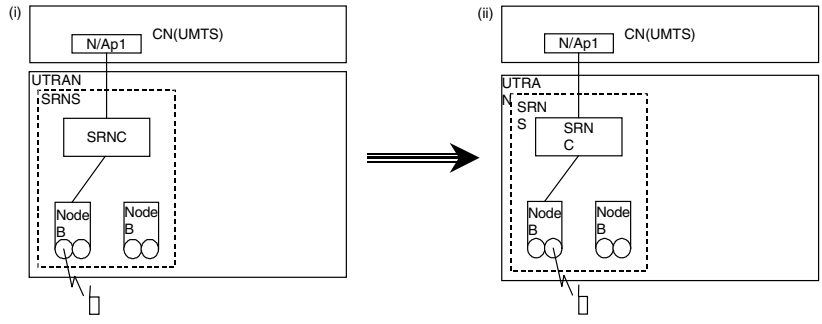

(a) Inter-Cell (Intra-Node-B)

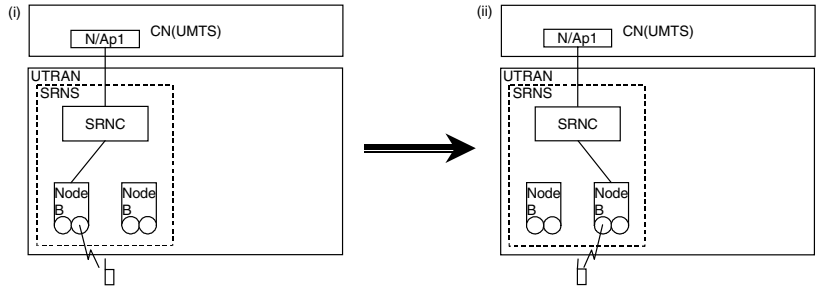

(b) Inter-Node B (Intra-RNS)

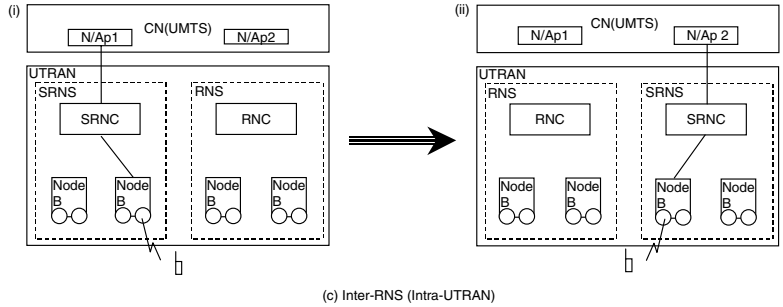

(c) Inter-RNS (Intra-UTRAN)

No Iur - Handover with SRNS relocation

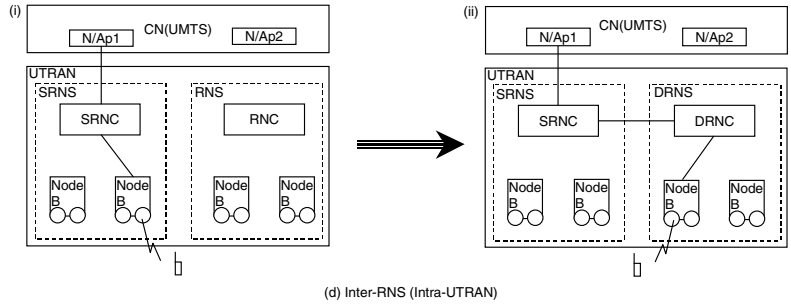

(d) Inter-RNS (Intra-UTRAN)

Iur - Handover without SRNS relocation

Figure 5.34 Handover Types

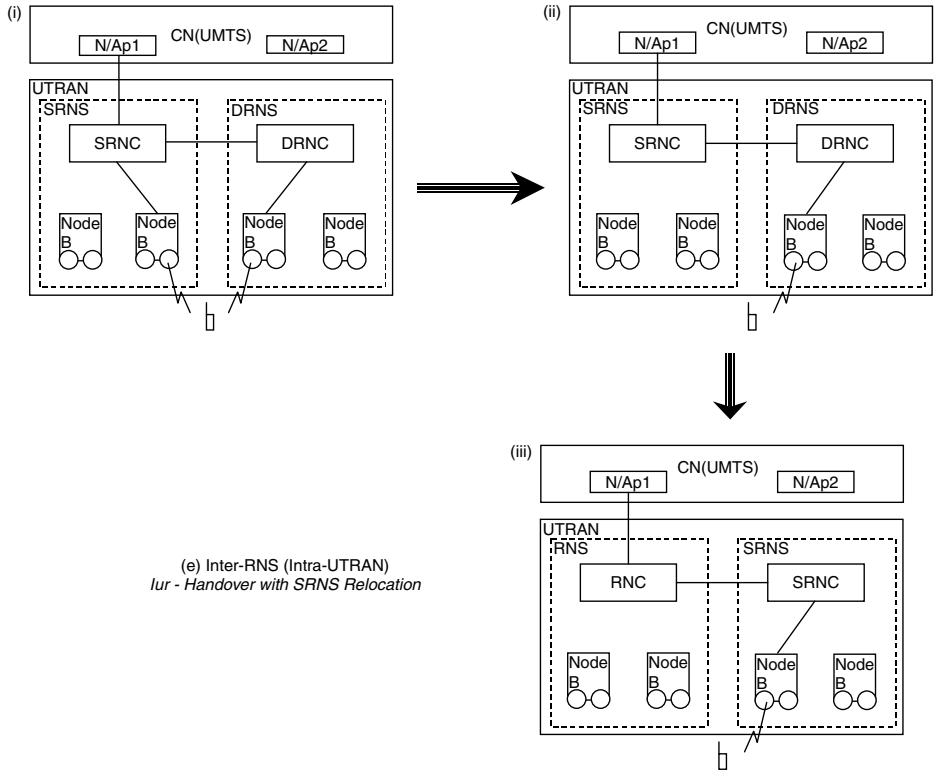

Figure 5.34 (*continued*)

When a UE is in CELL_DCH state, UTRAN (SRNC) controls the handover and decides when it is needed. The UE will assist in the handover decision by providing measurements of the radio environment it is experiencing, e.g. measurement reports reflecting signal quality from current cell and neighboring cells. Based on the UE measurements, the UTRAN makes a decision to initiate a handover. The handover procedure itself includes additional decisions pertaining to the radio and terrestrial resources to be allocated/released for a cell, when to stop and restart transmission of traffic radio bearers and signaling radio bearers based on the service type (RT or NRT), and whether to use transport channel or radio bearer reconfiguration to accomplish the handover. However, there is normally only a reassignment of physical channels, with no effect on logical or transport channels.

Figure 5.35 shows an example of a hard handover between two cells belonging to different Node Bs and different RNCs. It is assumed that there is no SRNS relocation, so that the UE is connected to the old SRNC via the new RNC via Iur interface.

The steps involved in an Inter-RNC handover procedure are as follows:

1. SRNC sends a **Radio Link Setup Request** message to the target RNC (i.e. new RNC). Parameters: target RNC identifier, s-RNTI, Cell ID, Transport Format Set, Transport Format Combination Set, DCH Information, etc.

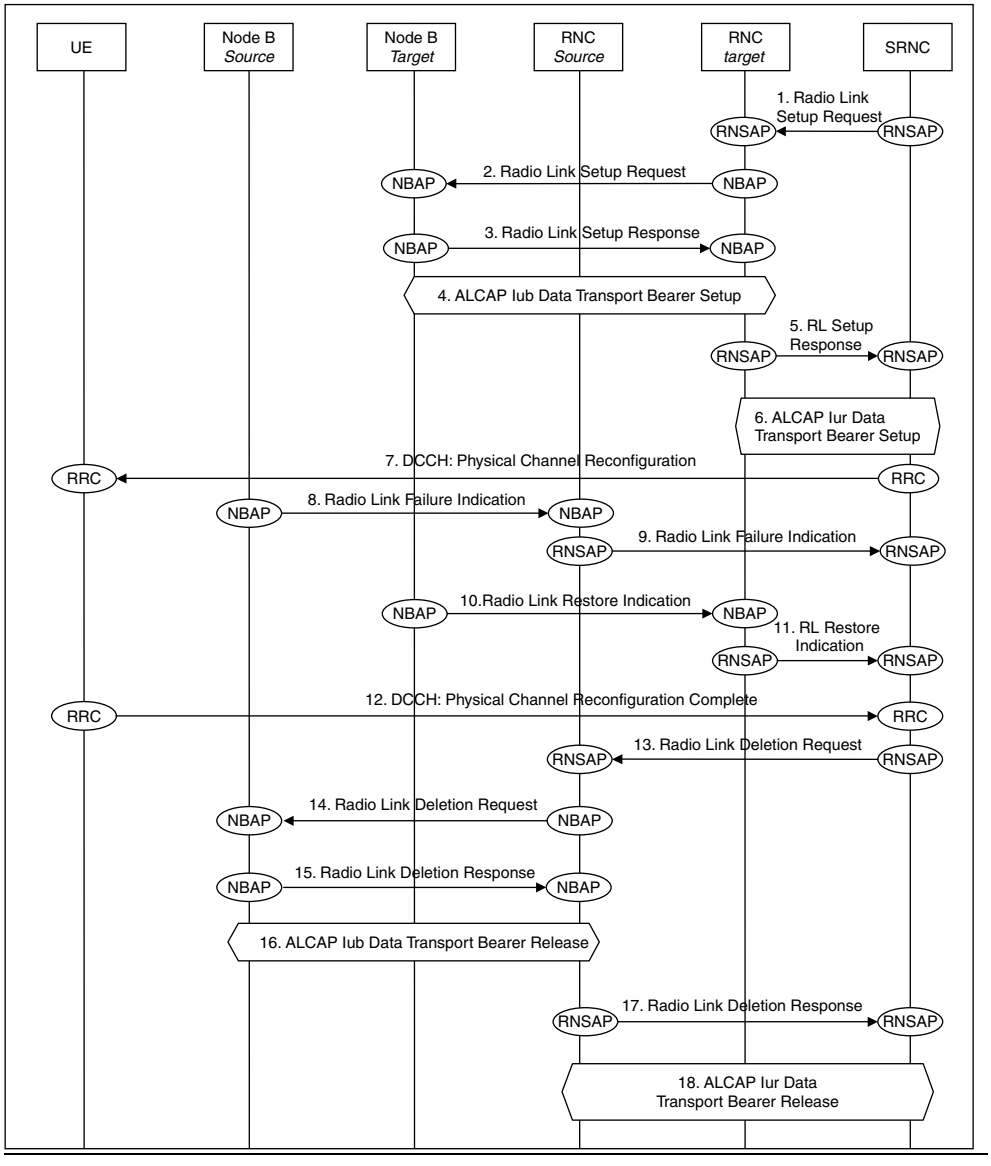

Figure 5.35 Inter-RNC Handover Procedure (Peer-to-Peer Procedure)

2. The target RNC allocates RNTI and radio resources for the RRC connection and the Radio Bearer(s) (if possible), and sends the NBAP message **Radio Link Setup Request** to the target Node B. Parameters: Cell ID, Transport Format Set, Transport Format Combination Set, frequency, Timeslots, User Codes, Power Control information; DCH information, etc.
3. Node B allocates resources, starts PHY reception, and responds with NBAP message **Radio Link Setup Response**. Parameters: Signaling link termination, Transport

layer addressing information for the Iub Data Transport Bearer, DCH information response.

4. Target RNC initiates set-up of Iub Data Transport Bearer using ALCAP protocol. The request for set-up of Iub Data Transport Bearer is acknowledged by Node B. A separate transport bearer is established for the DCH.
5. When the Target RNC has completed the preparation phase, **Radio Link Setup Response** is sent to the SRNC, including the DCH information parameters.
6. SRNC initiates set-up of Iur Data Transport Bearer using ALCAP protocol. Target RNC acknowledges the request for set-up of Iur Data Transport Bearer. A separate transport bearer is established for the DCH.
7. SRNC sends a RRC message **Physical Channel Reconfiguration** to the UE.
8. When the UE switches from the old RL to the new RL, the source Node B detects a failure on its RL and sends a NBAP message **Radio Link Failure Indication** to the source RNC (i.e. old RNC).
9. The source RNC sends a RNSAP message **Radio Link Failure Indication** to the SRNC.
10. Target Node B achieves uplink sync on the Uu and notifies target RNC with NBAP message **Radio Link Restore Indication**.
11. Target RNC sends RNSAP message **Radio Link Restore Indication** to notify SRNC that uplink sync has been achieved on the Uu.
12. When the RRC connection is established with the target RNC and necessary radio resources have been allocated, the UE sends RRC message **Physical Channel Reconfiguration Complete** to the SRNC.
13. The SRNC sends a RNSAP message **Radio Link Deletion Request** to the source RNC.
14. The source RNC sends NBAP message **Radio Link Deletion Request** to the source Node B. Parameters: Cell id, Transport layer addressing information.
15. The source Node B de-allocates radio resources. Successful outcome is reported in NBAP message **Radio Link Deletion Response**.
16. The source RNC initiates release of Iub Data Transport Bearer using ALCAP protocol. The DSCH transport bearer is also released.
17. When the source RNC has completed the release, the RNSAP message Radio Link Deletion Response is sent to the SRNC.
18. SRNC initiates release of Iur Data Transport bearer using ALCAP protocol. The Source RNC acknowledges the request for release of Iur Data Transport bearer. The DSCH transport bearer is also released.

Figure 5.36 illustrates some of the Inter-Layer messages involved in an example Inter-Node B handover.

The SRNC will send the RSNAP Radio Link Addition message to the CRNC, which will send a Node B Radio Link Setup Request message to the target Node B with Layer 1 (physical and transport channel) parameters for the new cell. A new transport data bearer is also allocated on the Iub. The handover command is then sent to the UE via the appropriate RRC message (e.g., PHYSICAL CHANNEL RECONFIGURATION). If 'activation time' is specified, the handover will be synchronized to occur at the specified CFN. Otherwise, the handover can occur upon receipt of the message.

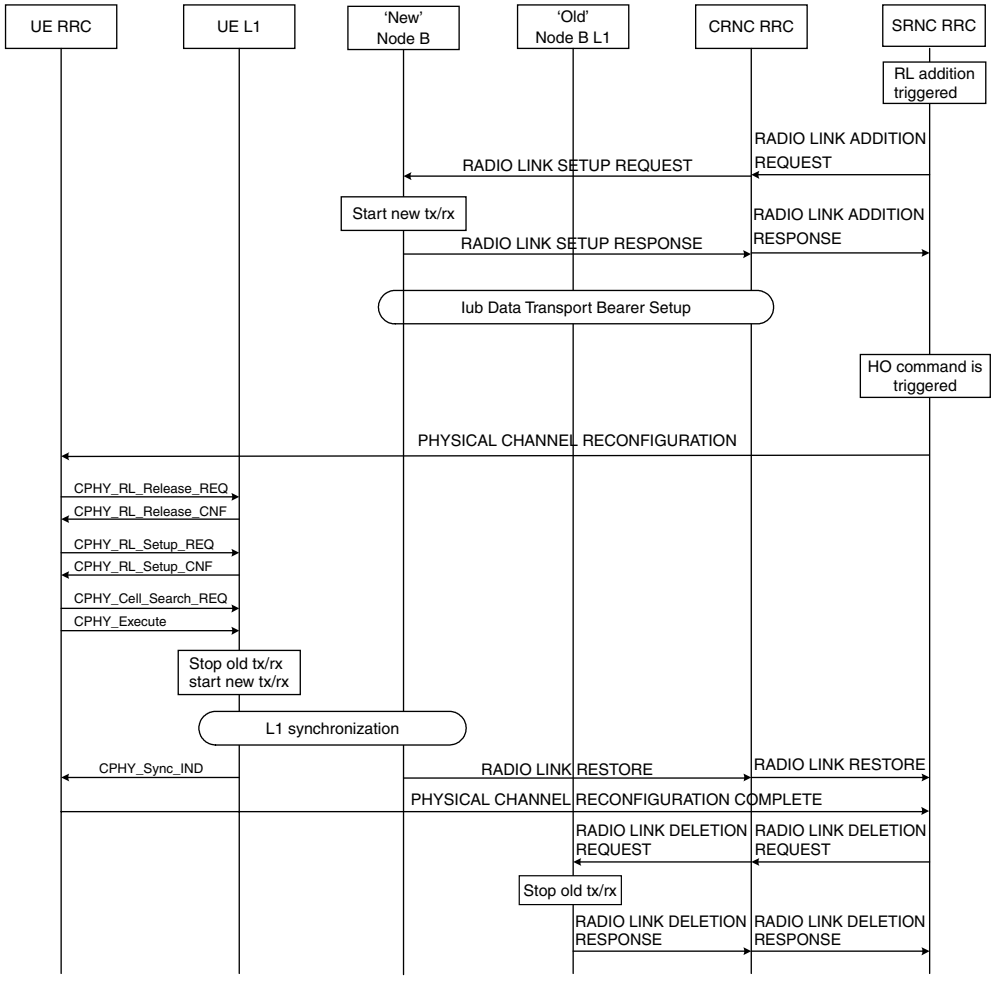

Figure 5.36 Inter-Node B Handover Procedure (Inter-Layer Procedure)

5.14 NAS SIGNALING MESSAGE TRANSMISSION PROCEDURES

One of the purposes of the Radio Link between the UE and the UTRAN is to transfer Signaling Messages and Data supplied by the NAS (in the UE and in the CN). In this section, we describe the procedures for transmitting NAS-generated signaling messages, while the transmission of NAS data is covered in the next section.

NAS Signaling messages are transported transparently by the UTRAN Uplink/Downlink 'Direct Transfer' procedures. Figure 5.37 shows the Uplink Direct Transfer procedure assuming that the UE is in Connected Mode. In step 1, UE sends RRC **Uplink Direct Transfer Message** to SRNC, containing the NAS Message as the message parameter. In step 2, the SRNC sends the RANAP message **Direct Transfer** to the CN, forwarding the NAS PDU as the message parameter.

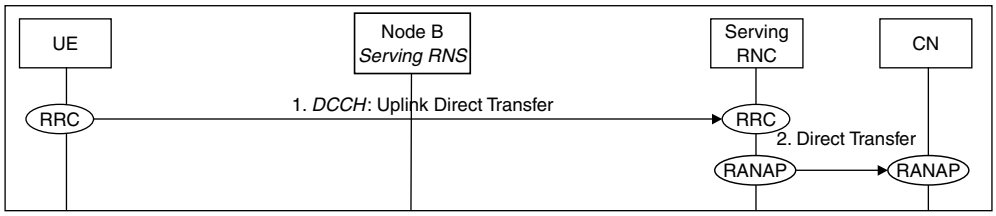

Figure 5.37 Uplink Direct Transfer

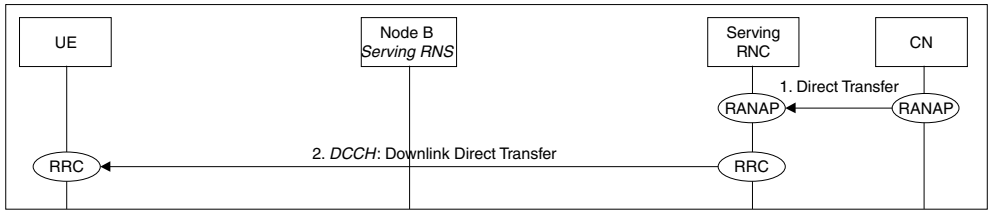

Figure 5.38 Downlink Direct Transfer Procedure

Figure 5.38 shows the Downlink Direct Transfer procedure assuming that the UE is in Connected Mode. In step 1, the CN sends the RANAP message **Direct Transfer** to the SRNC, containing the NAS PDU and the CN domain Identity as message parameters. In step 2, the SRNC sends RRC **Downlink Direct Transfer Message** to UE, forwarding the NAS Message.

5.15 DATA TRANSMISSION INITIALIZATION PROCEDURES

The message flow diagram in Figure 5.39 shows the initialization procedure among peer protocol entities for the establishment of the User Data Path. This example includes both a Serving and Drift RNC showing the functional split between SRNC (transport channel management) and DRNC (physical channel management) [4].

The steps involved in a Data Flow Initialization procedure are as follows:

1. A RAB Assignment request is received from the Core Network that triggers the establishment of a Radio Access Bearer. The RAB Assignment contains QoS parameters for each RAB required.
2. The proper Radio Bearer parameters and Transport channel parameters are selected using the QoS parameters from the RAB assignment.
3. The ALCAP layer sets up the Iu transport layer for the user plane (if not a packet domain call. PS domain uses an AAL5 connection so that there is no need to set up a time-critical AAL2 connection via ALCAP).
4. The Radio Link Setup Request from the SRNC to the DRNC includes the transport channel configurations desired. This includes TFCS and puncturing limit for each CCTrCH. It also includes TFS, desired BLERs for each transport channel, etc. Additionally, it includes UE capabilities that will be needed in the physical channel assignment.

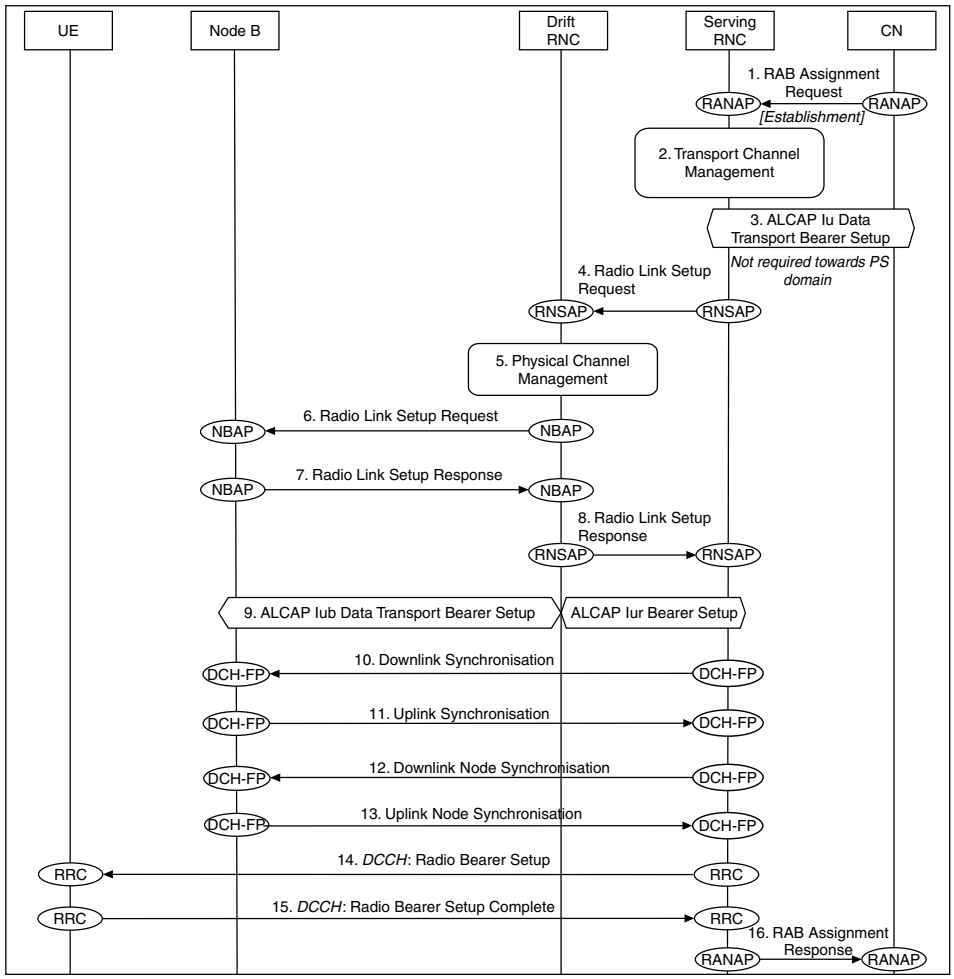

Figure 5.39 Data Flow Initialization Procedure (Peer-to-Peer)

5. The CRNC radio resource management function uses these transport parameters to determine the exact physical resources to be used to support the desired transport channels.
6. The CRNC sends the selected physical parameters and the transport channel parameters using a RADIO LINK SETUP REQUEST message to Node B, so that the Node B Layer 1 is configured with the proper values.
7. The RADIO LINK SETUP RESPONSE from Node B verifies that Node B is configured properly.
8. The RADIO LINK SETUP RESPONSE from the CRNC verifies that the CRNC is configured properly and it includes the selected physical parameters and all the neighboring cell information.
9. As a result of the Radio Link setup, the ALCAP layers will establish the user plane connections on the Iub and Iur.

10. The SRNC verifies the parameters for Downlink frame synchronization.
11. Node B returns the Uplink synchronization frame with the time of arrival allowing the SRNC to adjust its timing parameters needed to send data.
12. The SRNC sends a DL Node Synchronization frame.
13. After receiving a DL Node Synchronization frame, Node B will return the response in a UL Node Synchronization frame by adding the appropriate time stamps.
14. The RRC procedure is started by sending to the UE a RADIO BEARER SETUP containing the physical and transport channel configuration.
15. The UE returns on the new Dedicated channel the RADIO BEARER SETUP COMPLETE message that verifies the establishment.
16. The SRNC sends a RAB ASSIGNMENT RESPONSE to the Core Network to verify the establishment of the Radio Access Bearer.

The actual data flow can now occur as described in Chapter 4.

5.15.1 Inter-Layer Procedure

Figure 5.40 shows the initialization procedure among the different protocol layers [3]. In this diagram, all of the inter-layer primitives up to the RADIO BEARER SETUP message are included (Steps 1–13 of Figure 5.40). After the RADIO BEARER SETUP is received in the UE, the UE will configure Layer 1 with the proper physical parameters, and configure the MAC with proper transport channel parameters. After Layer 1 synchronization

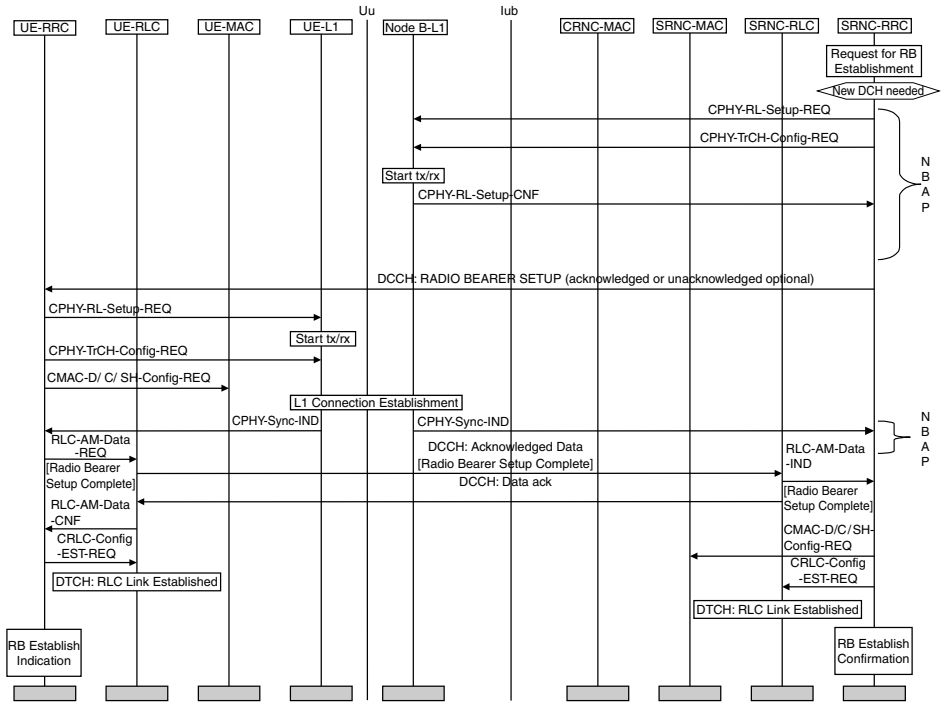

Figure 5.40 Data Flow Initialization Procedure (Inter-Layer)

(CPHY-IN_SYNC_ind received), the UE will send the RADIO BEARER SETUP COMPLETE message on the new link and configure its RLC for DTCH operation. After the CPHY-Sync_ind is received in the RNC, the RNC will configure its MAC and RLC to receive data. As mentioned before, the configuration of lower layers may be performed without waiting for the receipt of the COMPLETE messages.

5.16 END-TO-END COMMUNICATION PROCEDURES

In this section, we will describe a number of key end-to-end protocols, which go beyond the TDD Radio Access Network. Specifically, they include the elements of the Core Network as well as an external network, such as the PSTN or other PLMNs or the Internet. Since the Core Network consists of the distinctly different Circuit Switched (CS) and Packet Switched (PS) domains, we will cover these separately.

The first procedure to be addressed is UE Registration, which, for example, is the first step that happens after the user turns on his or her TDD device. This may be accompanied by an Authentication procedure, during which the network authenticates the user. The user can now initiate a CS call or a PS session, which are covered next.

5.16.1 UE Registration Procedures

Figure 5.41 shows how a UE registers in the CS domain of the Core Network.

Individual steps are described below:

1. The C-RNC sends the SYSTEM INFORMATION message to UE on BCCH to provide the UE with network information.
2. Starting from the RRC Idle Mode, the UE invokes RRC Connection Setup procedure and enters RRC Connected Mode.
3. The UE sends a LOCATION UPDATING REQUEST (NAS) message within the RRC INITIAL DIRECT TRANSFER message to the S-RNC.
4. The S-RNC forwards the LOCATION UPDATING REQUEST (NAS) message within the RANAP INITIAL DIRECT TRANSFER message to the Core Network.
5. The Authentication and Security procedure may be performed between the UE and network to authenticate the UE and to coordinate the encryption, if supported. The Authentication and Security signaling procedure is described in Section 5.16.2.
6. The Core Network sends a LOCATION UPDATING ACCEPT (NAS) message to the S-RNC within the RANAP DIRECT TRANSFER message.
7. The S-RNC forwards the LOCATION UPDATING ACCEPT (NAS) message to the UE within the RRC DIRECT TRANSFER message. This message may include a new TMSI to the UE.
8. The UE sends a TMSI REALLOCATION COMPLETE (NAS) message to the S-RNC within the RRC DIRECT TRANSFER message.
9. The S-RNC sends the TMSI REALLOCATION COMPLETE (NAS) message to the Core Network within the RANAP DIRECT TRANSFER message.
10. The RRC Connection Release procedure is invoked to release the RRC Connection, following which the UE returns to idle mode.

Figure 5.42 shows how a UE registers in the PS domain of the Core Network.

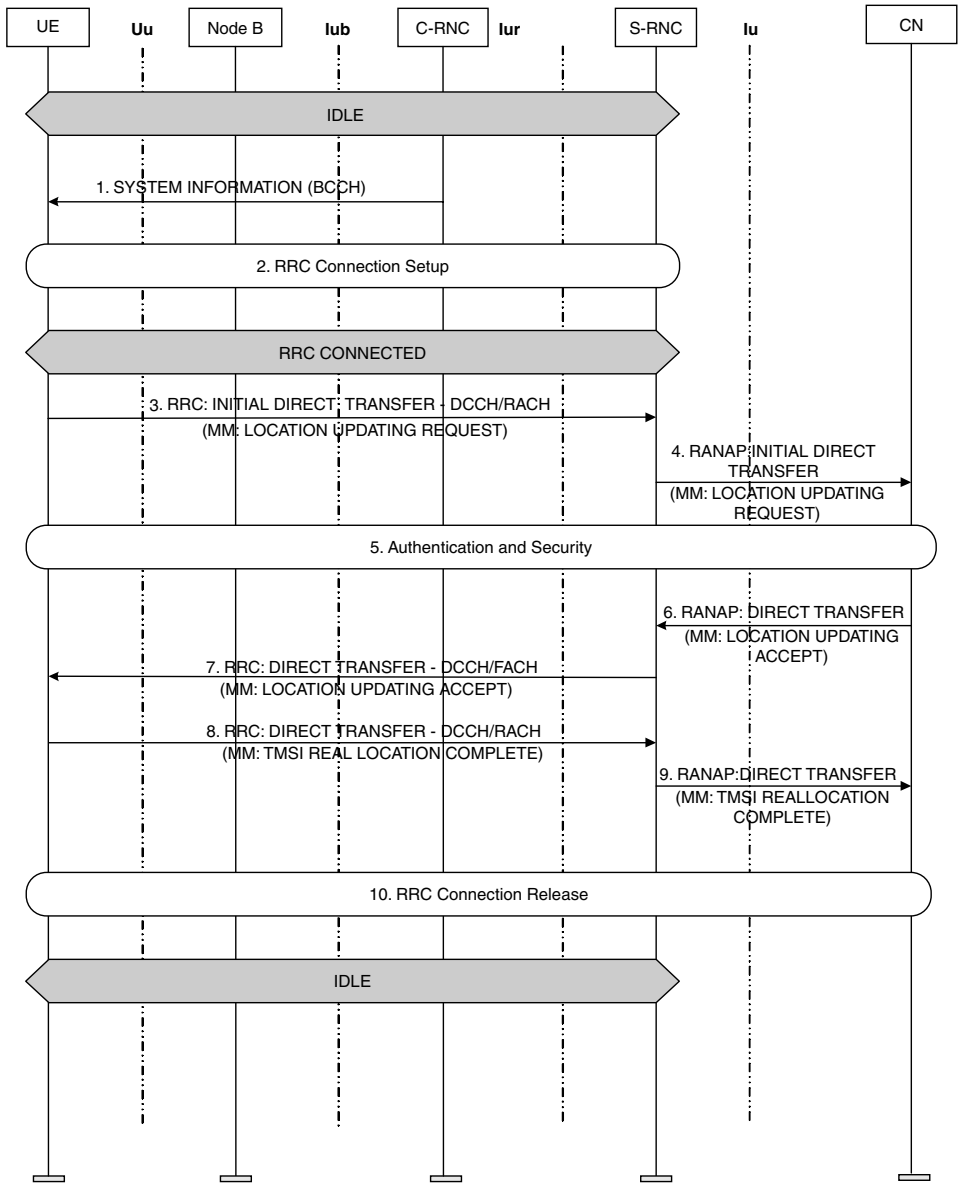

Figure 5.41 UE Registration on CS Domain

Steps 1–2 and 10 are the same as those in CS Registration case. The others are described below:

3 and 4. The UE sends a GMM (GPRS Mobility Management) message ‘Attach Request’ to the SRNC, which is relayed to the CN.

6. The Core Network sends an ATTACH ACCEPT (NAS) message to the S-RNC in RANAP DIRECT TRANSFER message.

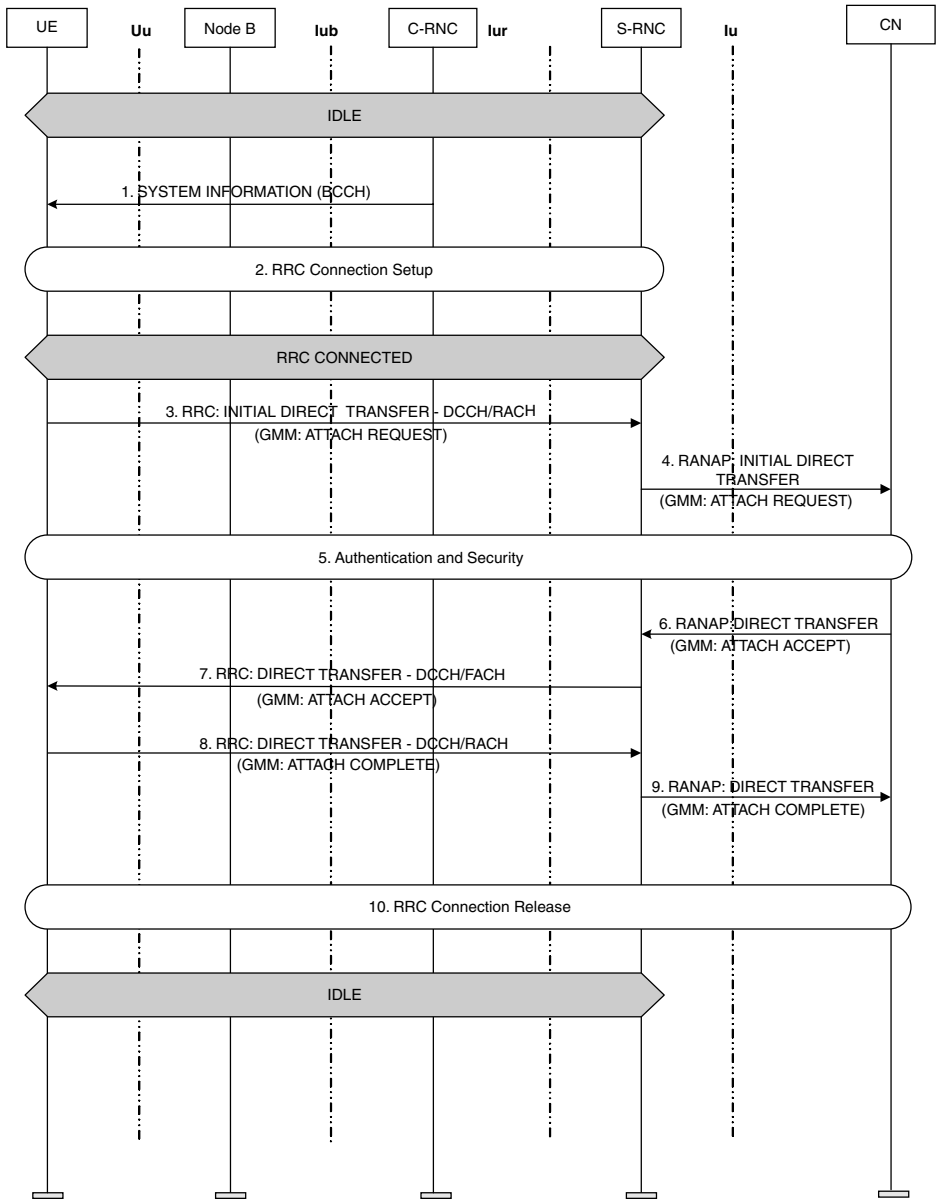

Figure 5.42 UE Registration on PS Domain

7. The S-RNC forwards the ATTACH ACCEPT (NAS) message to the UE in RRC DIRECT TRANSFER message.
8. UE sends an ATTACH COMPLETE (NAS) message to the S-RNC in RRC DIRECT TRANSFER message.
9. The S-RNC sends the ATTACH COMPLETE (NAS) message to the Core Network within the RANAP DIRECT TRANSFER message.

5.16.2 Authentication and Security

Figure 5.43 shows how a CN authenticates the User and initiates the Ciphering (for data) and Integrity Protection (for signaling messages) processes. The CS and PS procedures are separately included in the same figure.

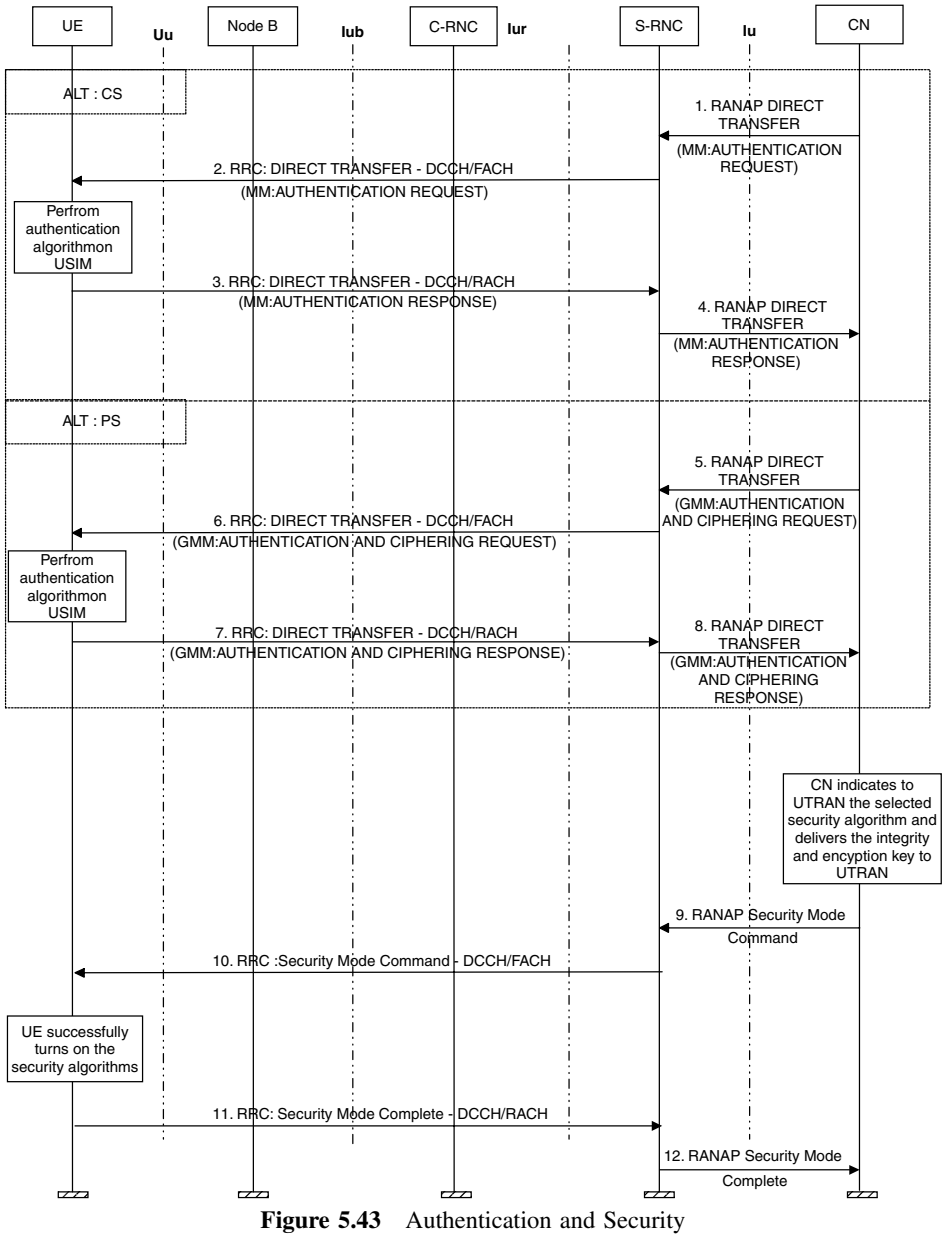

Figure 5.43 Authentication and Security

Individual steps are described below. Steps 1–4 are applicable for CS domain, whereas Steps 5–8 are for PS domain. The remaining steps are common to both CS and PS:

Alternative: for Circuit-Switched (CS) transactions

1. The CN sends a MM: AUTHENTICATION REQUEST message in the payload of RANAP Direct Transfer message to the S-RNC.
2. The S-RNC sends an MM: AUTHENTICATION REQUEST message in the payload of RRC Direct Transfer message to UE
3. After executing the authentication algorithms on USIM the UE responds with an MM: AUTHENTICATION RESPONSE message again in the payload of RRC Direct Transfer message.
4. The S-RNC sends an MM: AUTHENTICATION RESPONSE message in the payload of RANAP Direct Transfer message to CN.

Alternative: for Packet-Switched (PS) transactions

5. The CN sends a GMM: AUTHENTICATION AND CIPHERING REQUEST message in the payload of RANAP Direct Transfer message to the S-RNC.
6. The S-RNC sends a GMM: AUTHENTICATION AND CIPHERING REQUEST message in the payload of RRC Direct Transfer message to UE
7. After executing the authentication algorithms on USIM, the UE responds with a GMM: AUTHENTICATION AND CIPHERING RESPONSE message again in the payload of RRC Direct Transfer message.
8. The S-RNC sends a GMM: AUTHENTICATION AND CIPHERING RESPONSE message in the payload of RANAP Direct Transfer message to CN.

For both Circuit-Switched (CS) and Packet-Switched (PS) transactions

9. The CN sends a RANAP SECURITY MODE COMMAND message to S-RNC. In this message the CN domain indicates to UTRAN that the transaction should be encrypted. This message indicates the selected security algorithms and delivers the integrity and encryption keys to UTRAN.
10. Based on the information received in the RANAP message, the S-RNC sends RRC Security Mode Command message to UE. In this message, the S-RNC commands the UE to start encryption with the corresponding keys and algorithms.
11. The UE indicates that it has successfully turned on the selected integrity protection algorithm and encryption algorithm by sending RRC SECURITY MODE COMPLETE MESSAGE.
12. The S-RNC informs the CN domain about the procedure completion by sending the RANAP SECURITY MODE COMPLETE message.

5.16.3 CS Call Control Procedures

Call Control procedures can be classified as either UE originated or UE terminated. Furthermore, they can also be classified as Setup procedures or Connect procedures, where Setup procedure denotes the UE requesting a call, or a call being delivered to the UE, and Connect procedure denotes the completion of a call connection through the external network (PSTN).

5.16.3.1 Call Setup Procedure

Figure 5.44 illustrates the main steps involved for both UE-originated and UE-terminated calls.

Individual steps are described below:

Alternative: UE Terminating Transaction

1. The Core Network sends SETUP message to S-RNC in the RANAP Direct Transfer message to initiate a mobile terminated call establishment.
2. S-RNC sends RRC DIRECT TRANSFER message containing the SETUP message to UE.
3. UE responds with RRC DIRECT TRANSFER message containing CALL CONFIRMED to the S-RNC to confirm the incoming call request.
4. S-RNC forwards the CALL CONFIRMED message to the CN in RANAP DIRECT TRANSFER message.

Alternative: UE Originating Transaction

5. UE sends SETUP message in RRC: DIRECT TRANSFER message to S-RNC to initiate a mobile originating call establishment.
6. S-RNC forwards the SETUP message in RANAP DIRECT TRANSFER message to Core Network.
7. The Core Network responds with CALL PROCEEDING message in RANAP DIRECT TRANSFER message to indicate that the requested call establishment information has been received.

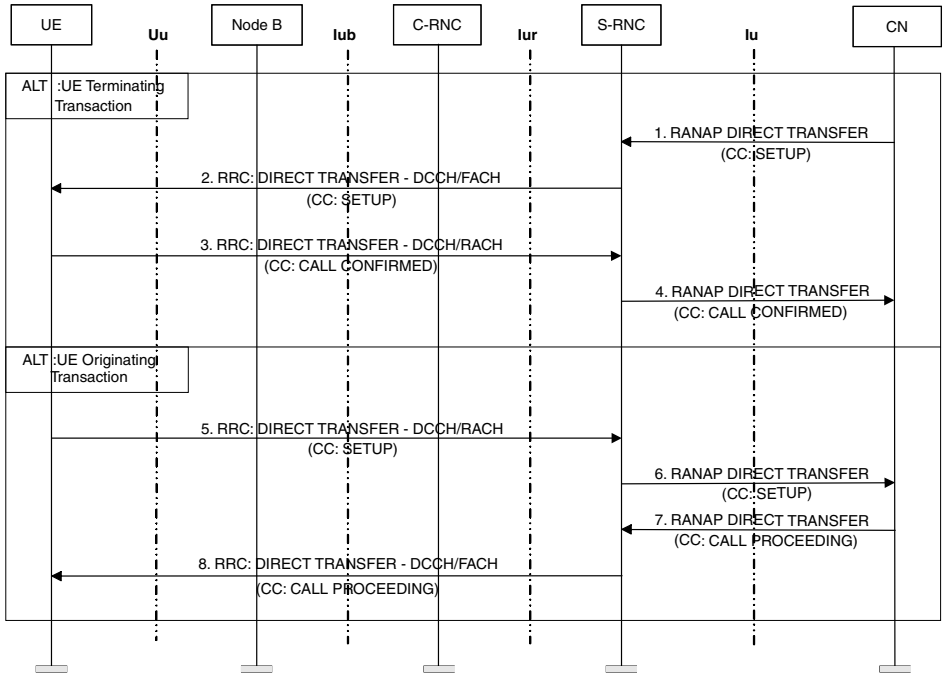

Figure 5.44 Call Control Setup Signaling Procedure

8. The S-RNC forwards the CALL PROCEEDING message in RRC DIRECT TRANSFER message to UE.

5.16.3.2 Call Connect Procedure

Figure 5.45 illustrates the main steps involved. In the UE terminated case, the call has arrived at the UE and the Connect procedure describes the steps taken by the UE subsequently. Similarly, in the UE terminated case, the call has been placed to the remote party, and an Alert indication arrives at the CN. The following steps are captured in the Connect procedure:

Alternative: UE Terminating Transaction

1. UE sends Alerting message in RRC: DIRECT TRANSFER message to the S-RNC to indicate that the called user (UE) alerting has been initiated.
2. S-RNC forwards the ALERTING message in RANAP DIRECT TRANSFER message to the Core Network.

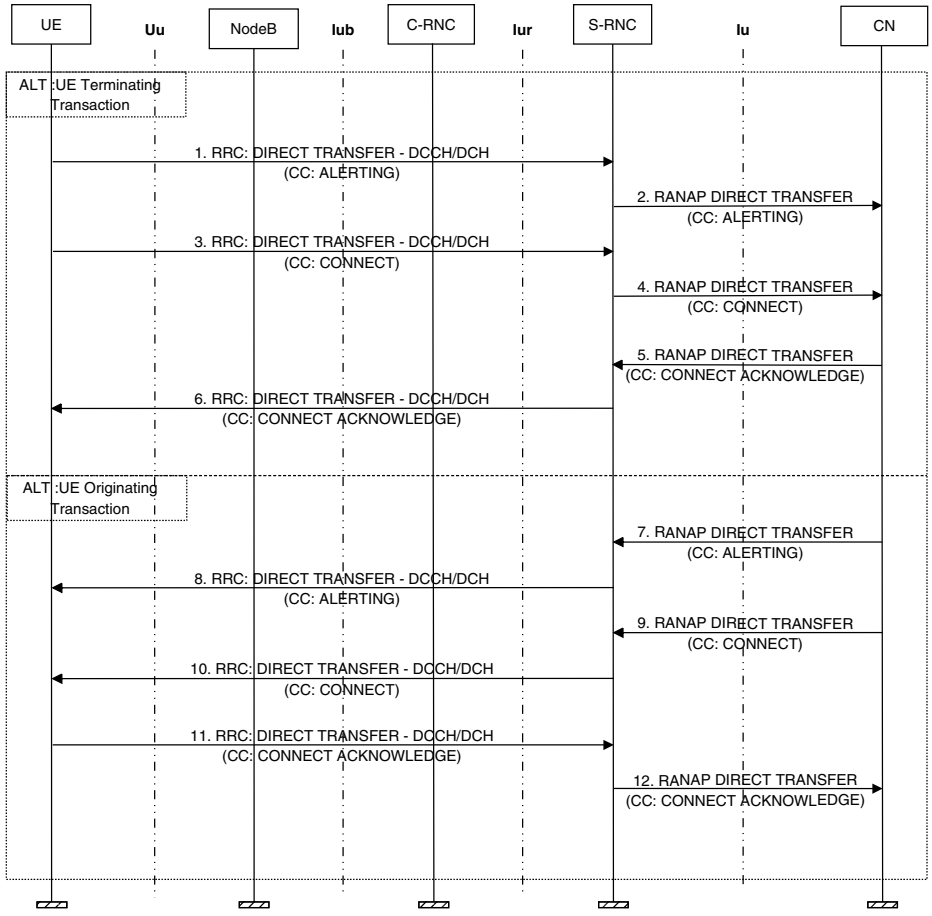

Figure 5.45 Call Control Connect Signaling Procedure

3. UE sends CONNECT message in RRC DIRECT TRANSFER message to the S-RNC to indicate call acceptance by UE.
4. S-RNC forwards the CONNECT message to the Core Network in RANAP DIRECT TRANSFER message.
5. Core Network sends CONNECT ACKNOWLEDGE message in RANAP DIRECT TRANSFER message to the S-RNC to indicate that the UE has been awarded the call.
6. S-RNC forwards the CONNECT ACKNOWLEDGE message to UE in RRC DIRECT TRANSFER message.

Alternative: UE Originating Transaction

7. Core Network sends Alerting message to the S-RNC in RANAP DIRECT TRANSFER message to indicate that the called user (UE) alerting has been initiated.
8. S-RNC forwards the ALERTING message in RRC DIRECT TRANSFER message to the UE.
9. Core Network sends CONNECT message in RANAP DIRECT TRANSFER message to the S-RNC to indicate call acceptance by UE.
10. S-RNC forwards the CONNECT message to the UE in RRC DIRECT TRANSFER message.
11. UE sends CONNECT ACKNOWLEDGE message in RRC DIRECT TRANSFER message to the S-RNC to acknowledge the offered connection.
12. S-RNC forwards the CONNECT ACKNOWLEDGE message to CN in RANAP DIRECT TRANSFER message.

5.16.4 PS Session Control Procedures

PS sessions are established by setting up a PDP Context between the UE and the GGSN of the CN, see Figure 5.46. Procedures for Requesting and Accepting the PDP Context are shown below:

Activate PDP Context Request

Optional: For UE terminating transaction only

1. Core Network sends SM: REQUEST PDP CONTEXT ACTIVATION message in RANAP DIRECT TRANSFER message to initiate activation of the PDP context.
2. S-RNC forwards the SM: REQUEST PDP CONTEXT ACTIVATION message in RRC DIRECT TRANSFER message to the UE.

For both UE-terminating and UE-originating transactions

3. UE sends SM: ACTIVATE PDP CONTEXT REQUEST message in RRC DIRECT TRANSFER message to S-RNC to request activation of a PDP context.
4. S-RNC forwards the SM: ACTIVATE PDP CONTEXT REQUEST message in RANAP DIRECT TRANSFER message to the Core Network.

Activate PDP Context Accept

5. The Core Network sends ACTIVATE PDP CONTEXT ACCEPT in RANAP DIRECT TRANSFER message to the S-RNC to acknowledge activation of a PDP context.
6. S-RNC forwards the ACTIVATE PDP CONTEXT ACCEPT to UE in RRC DIRECT TRANSFER message.

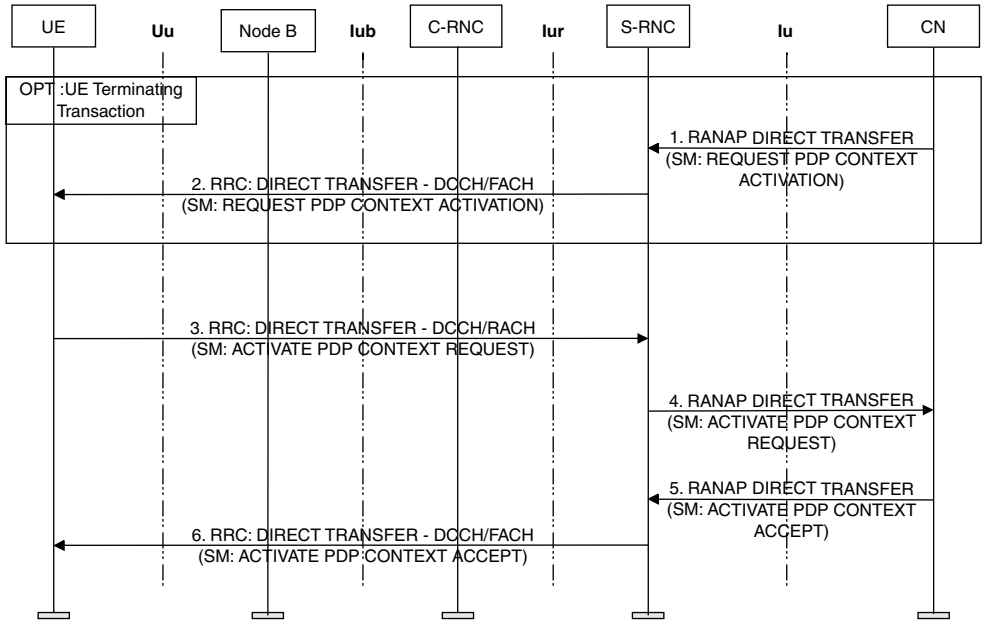

Figure 5.46 Activate PDP Context Signaling Procedure

5.16.5 CS Call and PS Session Data Procedures

Figures 5.47 and 5.48 show how a complete procedure looks like for CS Calls and PS sessions. It includes the UE Authentication, Registration, Call/Session Setup, and Data Flow.

The steps involved are:

Optional: UE-Terminated Transaction

1. In case of UE-terminating transactions, the paging signaling procedure is invoked to page the UE.
2. RRC Connection Setup procedure is invoked to establish RRC connection between UE and S-RNC for the incoming/outgoing call. After the RRC Connection Setup procedure is performed, the UE will be in RRC CONNECTED state waiting for the first RAB Setup.
3. In the Initial Direct transfer, the UE will provide the network with the reason for this transaction in the Service Request message.
4. Authentication and Security is performed between UE and network to authenticate the UE and to agree on the encryption if it is supported.
5. Call Control (CC Setup) is performed to set up the call between UE and Core Network.
6. The RAB setup procedure is performed.

6a. If the UE was in CELL-FACH, the UE now moves to the CELL-DCH state.

7. CC Connect is performed between the CN and UE to complete the call setup.
8. In case of Call the termination, the RAB Release procedure will be invoked.
9. When all the RABs in the UE are released, the UE will be in RRC CONNECTED state and RRC Connection Release will be invoked.

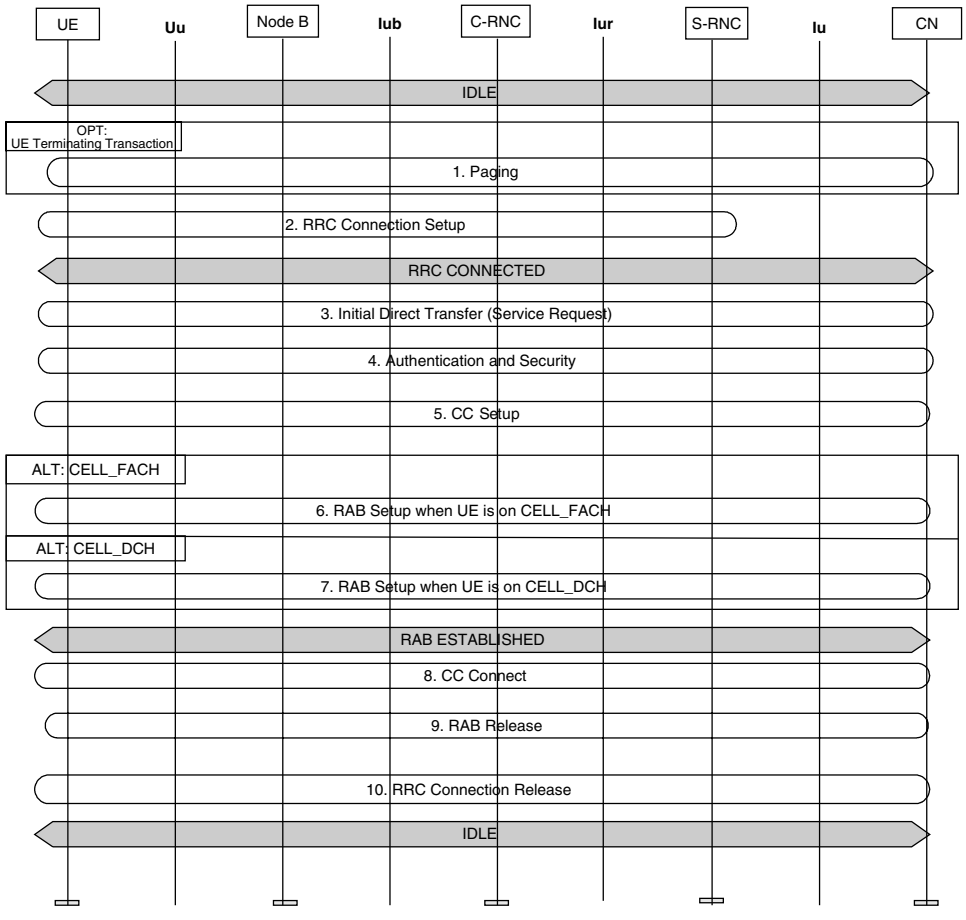

Figure 5.47 CS Overall Procedure

The complete procedure for PS is described below. Steps 1–4 and 11 are the same as those for the CS overall procedure. The others are now described:

5. The Activate PDP Context Request is performed to request establishment of a PDP context between the UE and the Core Network for a specific QoS.
6. The PS-RAB Setup (UE is on CELL_FACH) procedure is performed.
7. The Activate PDP Context Accept is performed to acknowledge activation of a PDP context.
8. First Temp-DCH allocation is invoked. (Temp-DCH is a DCH/T allocated for a finite value for the duration parameter.)
9. Subsequent Temp-DCH allocation will be invoked.
10. PS-RAB Release procedure will be invoked.

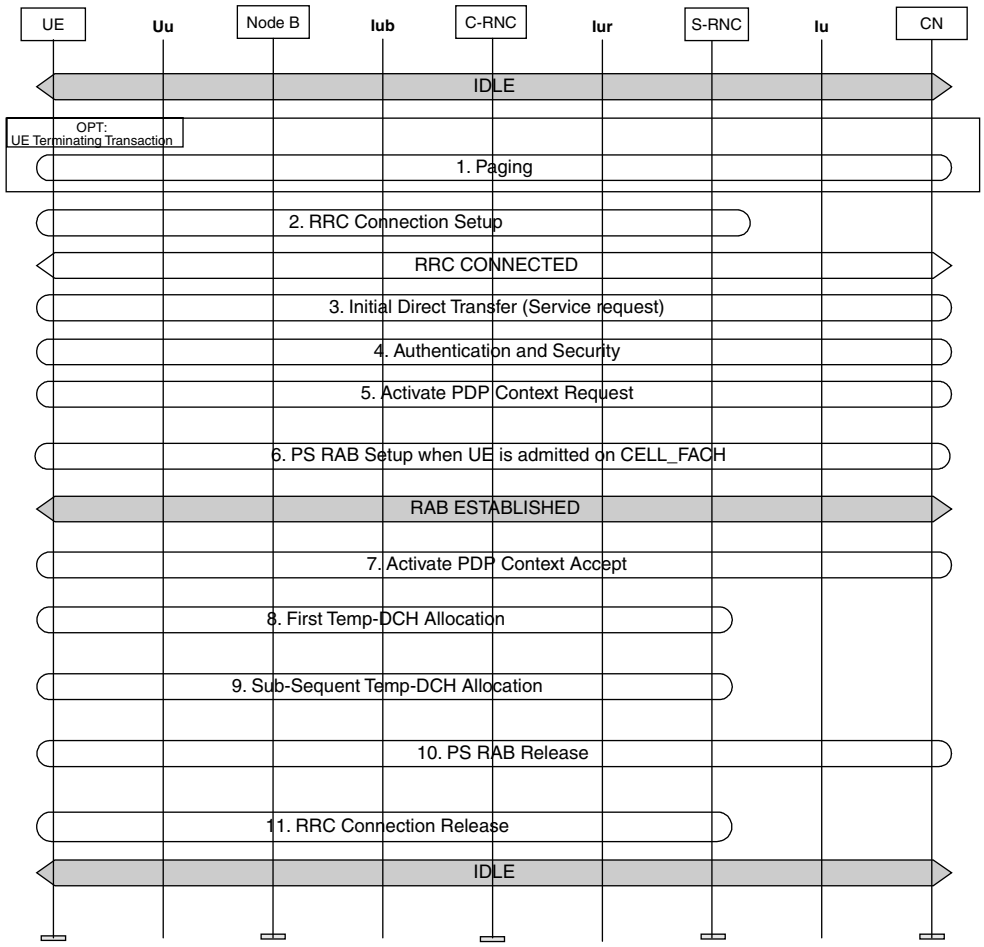

Figure 5.48 PS Overall Procedure

REFERENCES

[1] 3GPP TS 25.224 v4.5.0, '3GPP; TSG RAN; Physical Layer Procedures (TDD) (Release 4)', 2003-03.
[2] 3GPP TS 25.304 v4.5.0, '3GPP; TSG RAN; UE Procedures in Idle Mode and Procedures for Cell Reselection in Connected Mode, (Release 4)', 2002-06.
[3] 3GPP TS 25.303 v4.5.0, '3GPP; TSG RAN; Interlayer Procedures in Connected Mode (Release 4)', 2002-06.
[4] 3GPP TR 25.931 v4.4.0, '3GPP; TSG RAN; UTRAN Functions, Examples of Signaling Procedures (Release 4)', 2002-06.
[5] 3GPP TS 25.331 v4.5.0, '3GPP; TSG RAN; Radio Resource Control (RRC); Protocol Specification (Release 4)', 2002-06.

6

Receiver Signal Processing

The previous chapters have introduced the system overview, fundamentals of TDD, and details of the radio interface followed by procedures. In this chapter, we will discuss a number of technologies necessary to develop WTDD systems.

The WTDD Radio Interface and Procedures specify how to establish radio connections and manage them. Having done that, it is first of all necessary to discuss how the various features of the Radio Interface and Procedures are used to provide required Quality of Service to various user applications. Subsequently, we will address a number of aspects of efficient Management of the precious Radio Resources, with the central objective being to provide adequate QoS to a large number of users over a variety of channel conditions. Then we consider a number of Receiver algorithms, such as Data Detection, Channel Estimation, etc. Finally, we show how these various technologies may be put together to develop various network elements, namely UE, Node B and RNC.

6.1 RECEIVER ARCHITECTURE

Figure 6.1 shows the overall architecture of a BS Receiver. It is broken up into three blocks, namely the Receiver Front End, Physical Channel Processing and Transport Channel Processing:

- Receiver Front End: The receiver front end operates on the transmitted signal generated by one or more UE transmitters. The signal from each antenna is passed through the receiver pulse-shaping filter, which is a truncated version of the root-raised cosine filter, as described in a later Section of this chapter.
- Each of the data streams is passed through the joint channel estimation block and a post-processing block. There are several functionally equivalent implementations of the joint channel estimation procedure. The Steiner algorithm [2] using the prime factor DFT algorithm is a particularly suitable one. Post-processing eliminates false or weak paths from the channel estimates. The demodulator implements either a single Multi User Detector or multiple RAKE receivers (synonymously referred to as detectors/demodulators). Among the MUD receivers, there are Zero Forcing Joint Detection (ZF-BLE) and MMSE Joint Detection (MMSE-BLE) Block Linear Equalizer techniques, whereas RAKE receiver is implemented using a traditional Matched Filter. The

Wideband TDD: WCDMA for the Unpaired Spectrum P.R. Chitrapu
© 2004 John Wiley & Sons, Ltd ISBN: 0-470-86104-5

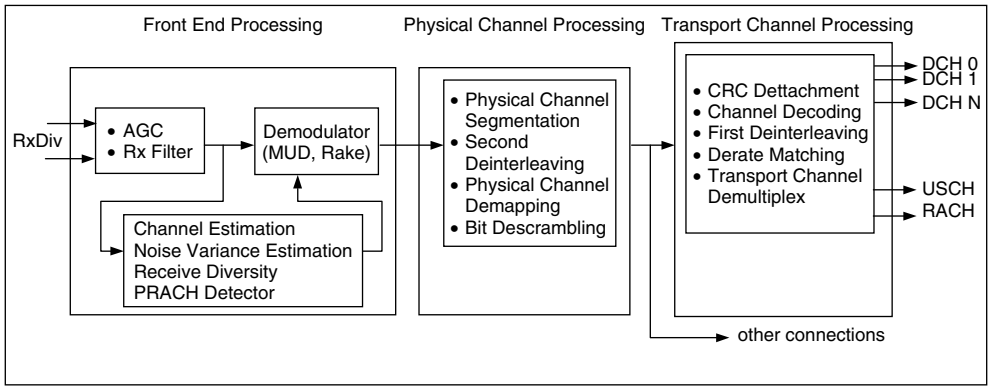

Figure 6.1 BS Receiver Architecture

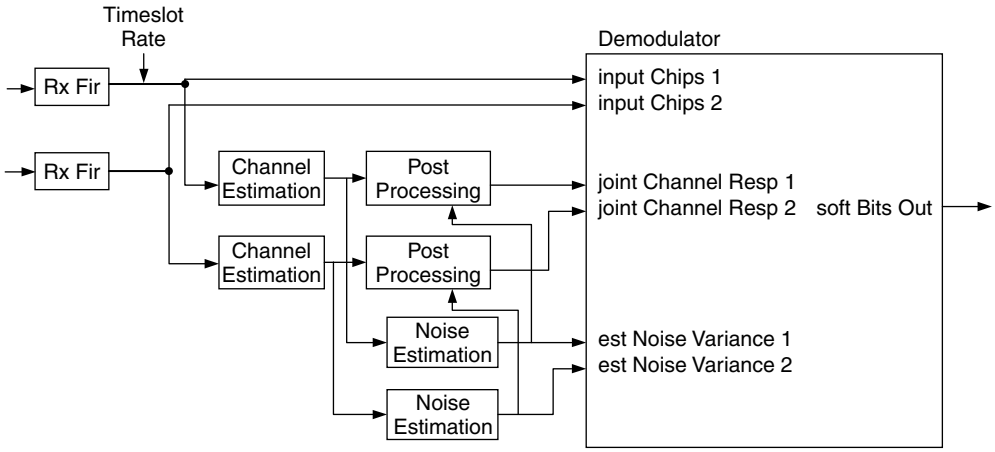

Figure 6.2 Receiver Front End Processing Details

output of the demodulator (joint detector) is a sequence of soft symbols. Figure 6.2 shows the details of the Receiver Front End; in the figure, samples from dual-diversity antennas are shown as chips 1 and 2.

- Physical Channel Processing: The physical channel processor separates the output of the Receiver front end into several data streams, each representing a coded composite transport channel (CCTrCH). In addition, it provides the TFCI and the TPC bits for each CCTrCH. For each CCTrCH, the second de-interleaving is performed (also referred to as intra-frame interleaving), followed by bit descrambling. The CCTrCH data stream is now separated into its constituent transport channels. These operations are inverses to the operations defined in TS 25.222 [1]. Figure 6.3 shows the details of the Physical Channel Processing.
- Transport Channel Processing: The transport channel processing operates on the data corresponding to a single transport channel. It performs de-rate-matching (which is the inverse operation of the rate-matching procedure) and 1st_de-interleave block (also known as interframe de-interleaving). This data is now decoded for channel decoding,

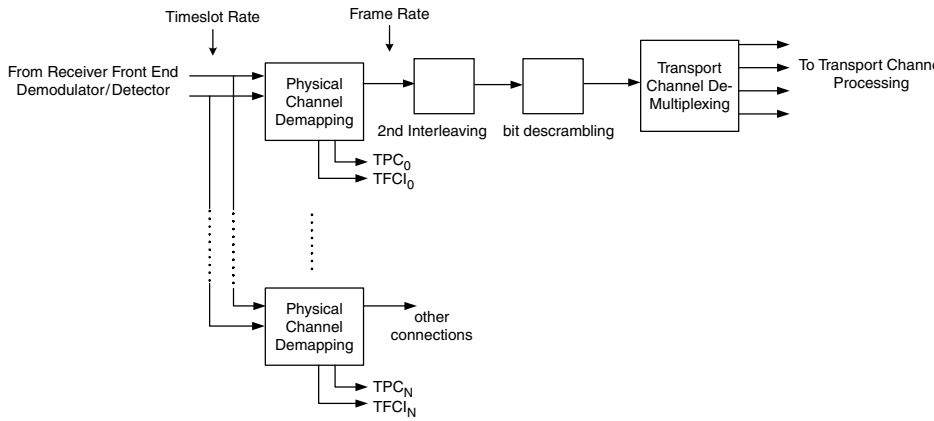

Figure 6.3 Physical Channel Processing Details

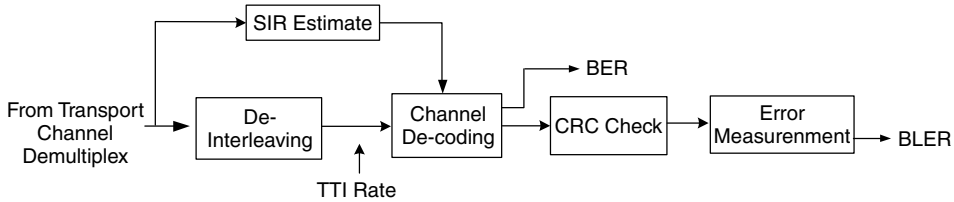

Figure 6.4 Transport Channel Processing

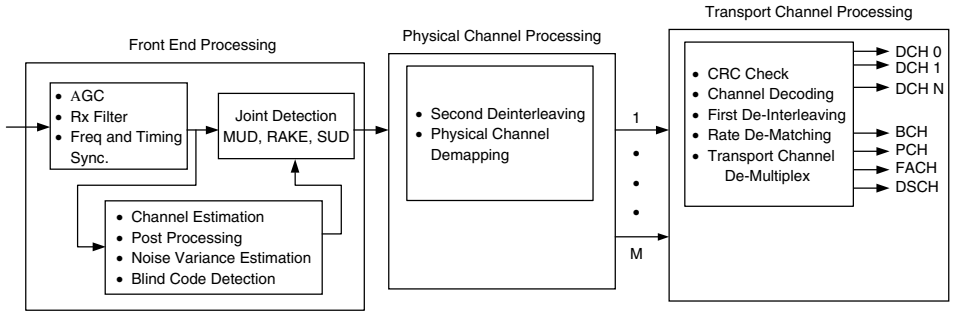

Figure 6.5 UE Receiver Architecture

which may be either Viterbi decoding or turbo decoding, depending on the channel-coding scheme used in the transmitter. The decoder also provides estimates of the channel bit error rate (BER). Note that SIR estimation is required for turbo decoding as well as for power control (except that it is performed on the CCTrCH, rather than each transport channel). Next the CRC is checked and the total number of block errors are counted, based on which block error rate (BLER) is estimated. The CRC errors are used in Uplink Outer Loop Power Control. Figure 6.4 shows the details.

From a signal processing point of view, the UE receiver is very similar to the BS receiver. One important difference is that the BS receiver processes multiple user signals unlike the

UE receiver, so that a Single User Detector (SUD – as opposed to a Multi-User Detector) may be employed. Second, the UE does not know the exact channelization code that is being used. So-called Blind Code Detection can be performed to determine which of the 16 channelization codes are being used. Removing the unused codes from the Multi-User Detector (MUD) improves the performance. These differences are depicted in Figure 6.5. An important UE function not shown is cell search, which is described later.

6.2 CHANNEL ESTIMATION

The advanced receivers employed by TDD systems, namely Joint or Multi-User Detectors, require a more accurate Channel Estimation than conventional CDMA mobile radio systems.

In the Uplink, Node B performs multi-user detection for which it requires knowledge of the channel response of each UE. Since signals from different UEs are subjected to different channels, Node B needs to compute multiple channel estimates.

In the Downlink, without transmit diversity, all Node B signals received at the UE pass through the same channel, thus obviating the need to compute multiple channel estimates. However, in the presence of transmit diversity, each UE's signal effectively passes through a different channel, necessitating the computation of multiple channel responses in order to perform multi-user detection. Since the support of the transmit diversity is mandatory in the UE, multiple channel estimation must be supported also in the UE. Hence, the channel estimation problem becomes similar for the uplink or the downlink, namely, that of estimating multiple channel responses.

To facilitate channel estimation, the TDD burst contains a known training sequence, namely, the midamble. Each UE transmits a unique midamble; for the case of two simultaneous channelization codes, one or two unique midambles are used. Node B has three options per timeslot: it may transmit a unique midamble for each UE (UE specific case), one or more midambles per UE which indicate the maximum number of physical codes (midamble-by-default case), otherwise, one midamble is used for all UEs (common midamble case). Certain restrictions apply to the selection of midambles, depending on type of channel, use transmit diversity or beamforming.

Let K be the maximum number of midambles transmitted in a timeslot, denoted as $\underline{m^{(k)}}$, $k = 1 \ldots K$ (the underscore signifies complex values). We recall from Chapter 3 that the midamble codes, of length L_m, are derived as time-shifted versions of a single periodic basic midamble code, $\underline{m_P}$, of period P and that the shift value is W chips, see Figure 6.6.

The parameters K, L_m, P, W, are carefully chosen to satisfy the following relations: $KW = P$ and $L_m = P + W - 1$. It will become apparent that channel estimation can be done accurately provided the channel impulse response is no greater than W chips. Table 6.1 summarizes the values of these parameters.

A particularly attractive joint channel estimation algorithm was originally described by Steiner and Jung [2], referred to as the Steiner algorithm henceforth. Following the estimation of the joint channel response, typically a post-processing algorithm 'cleans up' the response by only retaining channel coefficients that correspond to actual paths, and zeroing out the remaining coefficients that represent noise-only terms. Finally, if multiple channel estimates are available, they may be combined coherently to improve

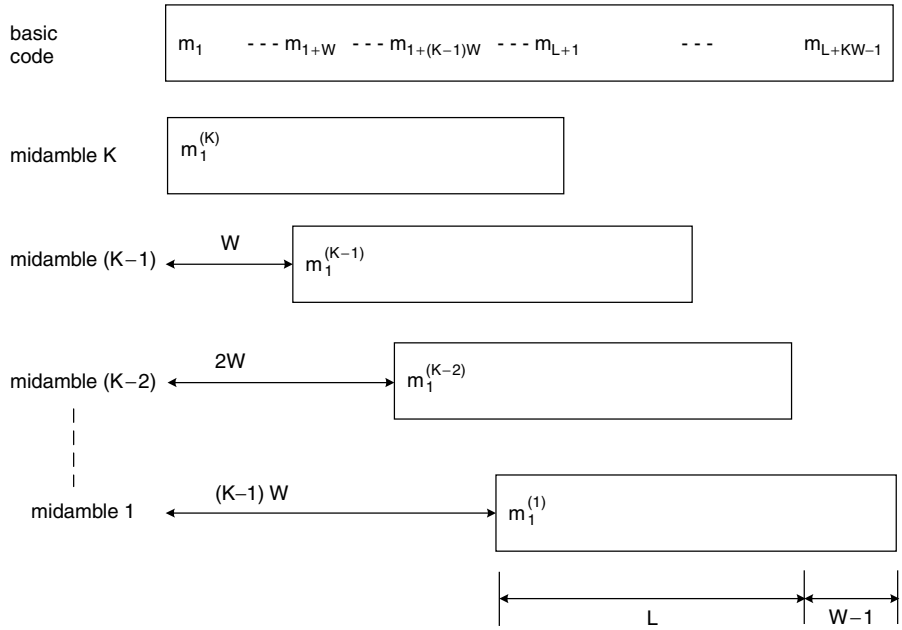

Figure 6.6 Derivation of the Midamble Code Set from a Single Basic Midamble Code

Table 6.1 TDD Burst Parameters

Parameter	Description	Burst Type 1/3			Burst Type 2	
	Channel Impulse Response Length	≤114	≤57	≤28	≤64	≤32
K	Maximum number of different midamble codes in a cell	4	8	16	3	6
W	Shift between the midambles	114	57	28/29*	64	32
P	Period of the cell-specific, basic midamble code, $\underline{m_P}$ in chips		456		192	
L_m	Length of each midamble code $\underline{m}^{(k)}$ in chips = Number of midamble chips in the burst		512		256	

* The shift alternates between 28 and 29, beginning with 28, resulting from two overlapping sets of $W = 57$ shifts.

the estimation accuracy. Multiple estimates may be available, for example, when multiple midamble shifts are transmitted via the same channel or when over-sampling is used. We now briefly describe the Steiner algorithm. We consider a discrete time system model and perform the analysis in the equivalent lowpass domain.

Let the K channel impulse responses be represented as $W \times 1$ column vectors as:

$$\underline{h}^{(k)} = (\underline{h}_1^{(k)}, \underline{h}_2^{(k)}, \ldots \underline{h}_W^{(k)})^T \text{ for } k = 1, \ldots K$$

Thus the total number of channel coefficients to be determined is $U = KW$.

Consider now the received signal corresponding to the midamble, whose length is L_m. The first (W − 1) samples of this signal are potentially contaminated by the channel impulse response acting upon the data chips preceding the midamble. So, the later $L_m - (\mathrm{W} - 1) = \mathrm{P}$ samples can be used for channel estimation. Accordingly, we define the received signal as a P × 1 vector as follows:

$$\underline{r} = (\underline{r}_W, \underline{r}_{W+1}, \ldots\ldots \underline{r}_{P+W-1})^T$$

The received signal is a sum of the contributions from each of the K midambles transmitted by various UEs, as shown in Figure 6.7.

In Figure 6.7, $\underline{G}^{(i)}$ is a Toeplitz matrix, representing the convolution operation between the midamble and channel, defined as:

$$\underline{G}^{(k)} = (\underline{G}_{ij}^{(k)} = \underline{m}_{W+i-j}^{(k)}) \text{ for } k = 1 \ldots K, i = 1 \ldots P, j = 1 \ldots W$$

Shown in the figure is also additive noise, represented as a vector $\underline{n}$. Thus, the received signal can be expressed as:

$$\begin{aligned} \underline{r} &= \underline{G}^{(1)}\underline{h}^{(1)} + \cdots + \underline{G}^{(K)}\underline{h}^{(K)} + \underline{n} \\ &= [\underline{G}^{(1)} \ldots\ldots\ldots \underline{G}^{(K)}] \begin{bmatrix} \underline{h}^{(1)} \\ \cdot \\ \underline{h}^{(K)} \end{bmatrix} + \underline{n} \\ &=^{\Delta} G.\underline{h} + \underline{n} \end{aligned}$$

where G is a P × KW = P × P square matrix constructed out of the K midambles and $\underline{h}$ is a KW = P long vector of unknown channel impulse response coefficients.

The maximum likelihood estimate of the channel impulse responses are given by:

$$\hat{\underline{h}} = (G^H G)^{-1} G^H \cdot \underline{r}$$

If G is of full rank, then the above formula reduces to

$$\hat{\underline{h}} = G^{-1} \cdot \underline{r} \tag{6.1}$$

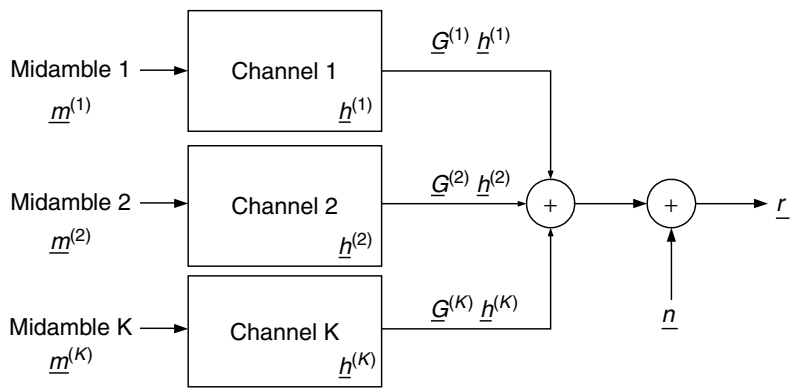

Figure 6.7 Model for Received Signal

The inversion of the G matrix can be performed efficiently by noting that G is a circulant matrix (that is, each row – starting with the second – is a circularly shifted version of the previous row). This property is a result of the fact that each midamble is a shifting segment of a periodically extended version of the basic code, (see Figure 6.6). It is well known that a circulant matrix can be expressed in terms of the DFT as shown below [5]:

$$G = D_P^{-1} \cdot \Lambda_C \cdot D_P \tag{6.2}$$

where D_P is the P-point DFT matrix:

$$D_P = \begin{bmatrix} \tilde{W}^0 & \tilde{W}^0 & \tilde{W}^0 & \tilde{W}^0 & \cdots & \tilde{W}^0 \\ \tilde{W}^0 & \tilde{W}^1 & \tilde{W}^2 & \tilde{W}^3 & \cdots & \tilde{W}^{(P-1)} \\ \tilde{W}^0 & \tilde{W}^2 & \tilde{W}^4 & \tilde{W}^6 & \cdots & \tilde{W}^{2(P-1)} \\ \tilde{W}^0 & \tilde{W}^3 & \tilde{W}^6 & \tilde{W}^9 & \cdots & \tilde{W}^{3(P-1)} \\ \vdots & \vdots & \vdots & \vdots & \cdots & \vdots \\ \tilde{W}^0 & \tilde{W}^{(P-1)} & \tilde{W}^{2(P-1)} & \tilde{W}^{3(P-1)} & \cdots & \tilde{W}^{(P-1)(P-1)} \end{bmatrix}$$

and Λ_C is a diagonal matrix whose main diagonal is the DFT of the first column of G, i.e.:

$$\Lambda_C = diag(D_P(G(:, 1)))$$

and $\tilde{W} = e^{-j\frac{2\pi}{P}}$. D_P is the DFT matrix in the sense that $D_P\underline{x}$ represents the P point DFT of the vector $\underline{x}$. Now, substituting Equation (6.2) in Equation (6.1), we get

$$\underline{\hat{h}} = (D_P^{-1} \cdot \Lambda_C^{-1} \cdot D_P)\underline{r} \tag{6.3}$$

D_P and D_P^{-1} are efficiently implemented using various FFT-type algorithms, such as Prime Factor Algorithm. Alternate implementations are also possible in time domain.

6.2.1 Post-processing

In general, among the estimated coefficients for each channel response, only a few correspond to actual multi-paths, the rest represent only the noise. The post-processing can be done to provide a more accurate channel response by reducing the number of such noise-only terms, thereby improving the performance of the data detection. For example, a simple post-processing may involve zeroing out the channel coefficients, which are less than a predetermined threshold, based on the estimated noise power.

Figure 6.8 depicts an example performance of Channel Estimation by comparing the performance of a simple Detector under three different conditions: 1) an exact known channel, 2) Channel Estimation; and 3) Channel Estimation with Post-processing.

6.3 DATA DETECTION

6.3.1 Introduction

Data estimation techniques for multi-access system can be classified into three categories: (1) Rake receivers/matched filters; (2) single user detection (SUD); and (3) multi-user

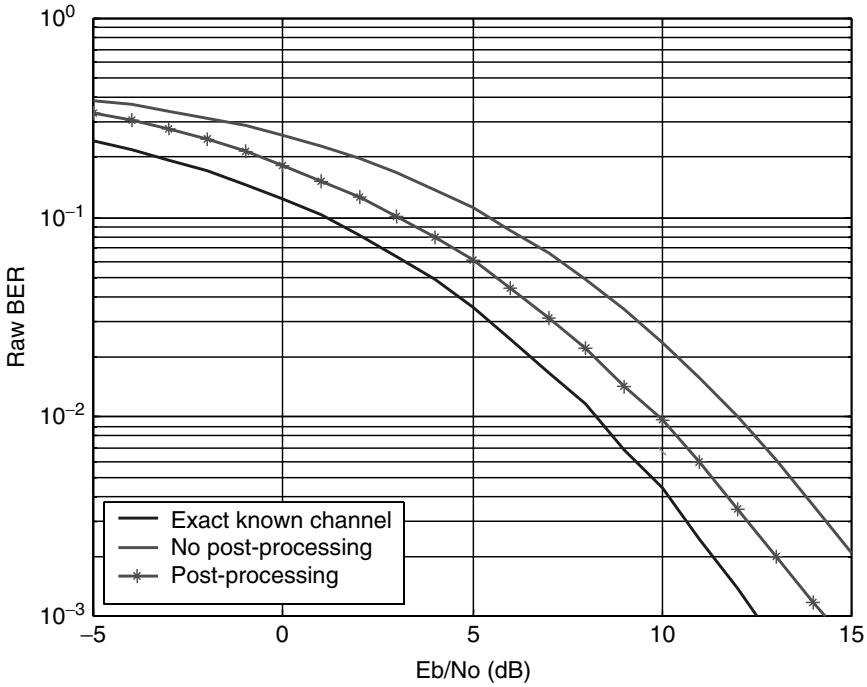

Figure 6.8 Raw BER vs. Eb/No in ITU Pedestrian Type B Channel

detection (MUD). Rake receivers/matched filters are suitable for cases where signals can be separated by codes. This is not the case for high capacity TDD systems, primarily because of the low spreading factors (SF $\leq$ 16). We therefore focus on SUD and MUD techniques.

There are a large number of MUD techniques that were derived and investigated in the literature. These techniques vary in their performance and computational complexity. The optimal data detection algorithm was derived by Verdu [3]. The computational complexity of the optimal data detection algorithm is prohibitive for current technology, even in the context of TDD where the number of users is no greater than 16. The study of candidate algorithms is focused therefore on sub-optimal algorithms.

Sub-optimal algorithms usually fall into one of the following main categories:

- Joint Detection (JD) algorithms, often referred to as 'linear detectors' or 'Block Linear Equalizers' (BLE);
- Parallel Interference Cancellation (PIC);
- Successive Interference Cancellation (SIC).

The current state of the art suggests that JD offers better performance than PIC. Within the JD approach, a number of specific algorithms are possible as listed below:

- Zero Forcing Block Linear Equalizer (ZF-BLE) [2, 3];
- Minimum Mean Square Error Block Linear Equalizer (MMSE-BLE) [2, 3];
- Zero Forcing Block Linear Equalizer with Decision Feedback (DF ZF-BLE);
- Minimum Mean Square Error Block Linear Equalizer with Decision Feedback (DF MMSE-BLE).

6.3.2 Multi-User Detection

As mentioned earlier, Multi-User Detection is useful for Uplink transmissions as well as Downlink transmissions in the presence of Transmit Diversity. For the discussion here, we shall consider the more general case of Uplink transmissions, for which the basic information is taken from [4].

Referring to Figure 6.9, we consider K users, with each user transmitting a sequence of N data symbols

$$\mathbf{d}^{(k)} = [d_1^{(k)}, d_2^{(k)}, \ldots d_N^{(k)}]^T \text{ for k } = 1 \ldots \text{ K}$$

Each data symbol is taken from a complex alphabet $V^{(k)}$ of size $M^{(k)}$, which may be different for different users, so that the data rates may be different for different users. The data symbol duration is T_S.

Each data symbol is spread using a user-specific code $\mathbf{c}^{(k)}$ of length Q:

$$\mathbf{c}^{(k)} = [c_1^{(k)}, c_2^{(k)}, \ldots c_Q^{(k)}]^T \text{ for k } = 1 \ldots \text{ K}$$

The duration of each code element is the chip duration $T_c = T_s/Q$. The spreading operation can be represented by repeating the data symbol $d_n^{(k)}$ Q-times and multiplying by $\mathbf{c}^{(k)}$. Note that Multi-User Interference occurs due to non-orthogonal code sequences, when UE signals arrive at Node B with varying time delays, as well as due to multi-path spread.

Let each of the K channels be characterized by the impulse response of length W chips:

$$\mathbf{h}^{(k)} = [h_1^{(k)}, h_2^{(k)}, \ldots h_W^{(k)}]^T \text{ for k } = 1 \ldots \text{ K}$$

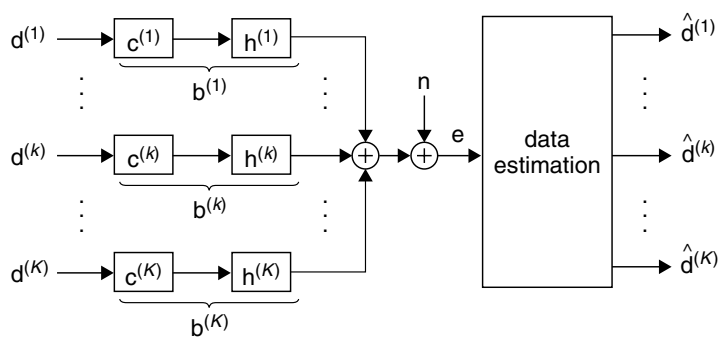

Figure 6.9 Discrete-Time Baseband Model of Multi-user Signal Transmission and Reception

We assume that the impulse response does not change during a data symbol sequence duration, but that it can change between data symbol sequences.

Note that Inter Symbol Interference occurs due to channel impulse responses beyond one chip (W > 1).

Let the combined code and channel response sequence be denoted as:

$$\mathbf{b}^{(k)} = [b_1^{(k)}, b_2^{(k)}, \ldots b_{Q+W-1}^{(k)}]^T = \mathrm{c}^{(\mathrm{k})} * \mathrm{h}^{(\mathrm{k})} \text{ for k } = 1 \ldots \text{ K}$$

The received signal r is a sum of the signals received from the K-users and noise.

Consider a case with K = 2, N = 3, Q = 3 and W = 4. The received chip-rate sequences from the two users may be written as:

$$\mathbf{s}^{(k)} = \mathbf{A}^{(k)}\mathbf{d}^{(k)} = \begin{bmatrix} b_1^{(k)} & 0 & 0 \\ b_2^{(k)} & 0 & 0 \\ b_Q^{(k)} & 0 & 0 \\ b_{Q+1}^{(k)} & b_1^{(k)} & 0 \\ b_{Q+2}^{(k)} & b_2^{(k)} & 0 \\ b_{Q+W-1}^{(k)} & b_Q^{(k)} & 0 \\ 0 & b_{Q+1}^{(k)} & b_1^{(k)} \\ 0 & b_{Q+2}^{(k)} & b_2^{(k)} \\ 0 & b_{Q+W-1}^{(k)} & b_Q^{(k)} \\ 0 & 0 & b_{Q+1}^{(k)} \\ 0 & 0 & b_{Q+2}^{(k)} \\ 0 & 0 & b_{Q+W-1}^{(k)} \end{bmatrix} \begin{bmatrix} d_1^{(k)} \\ d_2^{(k)} \\ d_3^{(k)} \end{bmatrix} \text{ for k } = 1, 2.$$

Adding noise term $\vec{\mathbf{n}} = [n_1, n_2, \ldots n_{NQ+W-1}]^T$, with covariance matrix $\mathbf{R}_\mathrm{n}$, the signal for estimating data becomes:

$$\vec{\mathbf{r}} = [\mathbf{A}^{(1)} \ldots \mathbf{A}^{(K)}] * \begin{bmatrix} \mathbf{d}^{(1)} \\ \ldots \\ \mathbf{d}^{(K)} \end{bmatrix} + \vec{\mathbf{n}} \triangleq \mathbf{A}.\vec{\mathbf{d}} + \vec{\mathbf{n}}$$

6.3.3 Zero-Forcing Block Linear Equalizer (ZF-BLE) JD

The ZF-BLE Joint Detector estimates the symbol vector $\vec{d}$ by:

$$\hat{\vec{d}} = (A^H R_n^{-1} A)^{-1} A^H R_n^{-1} \vec{r} \tag{6.4}$$

For white noise (diagonal R_n), the above equation becomes:

$$\hat{\vec{d}} = (A^H A)^{-1} A^H \vec{r} \tag{6.5}$$

Thus, the ZF-BLE data estimation scheme requires a matrix inversion, which is generally computationally expensive. For example, in the case of 8 users with a common spreading factor of 16 and impulse response length of length 57, the size of $A^H A$ is 488×488. Matrix inversion based on the Cholesky decomposition requires about $n^3/6$ complex operations [5], which is prohibitive in many practical situations.

An efficient implementation is possible by reordering the columns of the matrix $A^H A$, so that the resulting matrix has a banded structure. Such a banded matrix can be efficiently inverted. For example, an improvement by a factor of 40 is possible for the case of 8 users with a spreading factor of 16.

6.3.4 Minimum Mean Square Error Block Linear Equalizer (MMSE-BLE) Joint Detector

The MMSE-BLE estimates the symbol vector $\vec{d}$ by:

$$\vec{d} = (A^H R_n^{-1} A + R_d^{-1})^{-1} A^H R_n^{-1} \vec{r}$$

where R_n is the noise covariance matrix and R_d is the symbol covariance matrix. For the special case of white noise with covariance matrix $R_n = \sigma^2 I$, and symbol covariance $R_d = I$, the MMSE-BLE estimate is given by:

$$\hat{\vec{d}} = (A^H A + \sigma^2 I)^{-1} A^H \vec{r}$$

Just like the ZF-BLE, the MMSE-BLE requires a computationally expensive matrix inversion. The dimensions of the matrix to be inverted are the same as for the ZF-BLE. Fortunately, the matrix to be inverted has the same banded structure (after appropriate reordering of columns) as for the ZF-BLE. Thus, efficient implementation based on the banded structure of $A^H A + \sigma^2 I$ and the Cholesky decomposition is possible. The improvement in the computational complexity compared to the non-banded approach is similar to the ZF-BLE.

The estimated variance of the background noise σ^2 is an input to this algorithm, which can be provided by the channel estimation algorithm. The MMSE-BLE is robust to noise variance estimation errors.

6.3.5 Zero Forcing Block Linear Equalizer with Decision Feedback (DF ZF-BLE) Joint Detector

Let us express $A^H A$ in terms of its LDL^H decomposition:

$$A^H A = LDL^H$$

where L and D are lower triangular and diagonal matrices. Also let

$$\vec{b} = L^H \hat{d}_{ZF-BLE}$$

where $\hat{d}_{ZF-BLE}$ is the estimate provided by the ZF-BLE.

Denote by N_s the total number of symbols of all users. Let $l(i, j)$ denote the i, j element of L. The estimated symbol vector is obtained by the following recursive procedure:

$$\hat{d}_{DF\,ZF-BLE}(N_s) = Q(b_{N_s})$$

where Q is the decision operator for mapping to QPSK symbols.

For $j = 1$ though $N_s - 1$

$$\hat{d}_{DF\,ZF-BLE}(N_s - j) = Q\left(b_{N_s} - \sum_{i=1}^{j} l^*(N_s - j + i, N_s - j)\hat{d}_{ZF-BLE}(N_s - j + i)\right)$$

6.3.6 Minimum Mean Square Error Block Linear Equalizer with Decision Feedback (DF MMSE-BLE) Joint Detector

Let us express $A^H A + \sigma^2 I$ in terms of its LDL^H decomposition

$$A^H A + \sigma^2 I = LDL^H$$

where L and D are lower triangular and diagonal matrices and σ^2 is the variance of the background noise. Also let

$$\vec{b} = L^H \hat{d}_{MMSE-BLE}$$

where $\hat{d}_{MMSE-BLE}$ is the estimate provided by the MMSE-BLE. Denote by N_s the total number of symbols of all users. Let $l(i, j)$ denote the i, j element of L. The estimated symbol vector is obtained by the following recursive procedure:

$$\hat{d}_{DFMMSE-BLE}(N_s) = Q(b_{N_s})$$

where Q is the decision operator for mapping to QPSK symbols.

For $j = 1$ though $N_s - 1$

$$\hat{d}_{DFMMSE-BLE}(N_s - j) = Q\left(b_{N_s} - \sum_{i=1}^{j} l^*(N_s - j + i, N_s - j)\hat{d}_{MMSE-BLE}(N_s - j + i)\right)$$

6.3.7 Approximate Cholesky/LDL^H Factorization

The computational complexity of the above algorithms can be further reduced by employing an approximate but efficient algorithm to perform Cholesky/LDLH factorization [6, 7]. The approximation is based on the observation that the matrices $A^H A$ and $(A^H A + \sigma^2 I)$ are Hermitian, banded and block-Toeplitz. They consist of a number of equal blocks, each of dimension $K \times K$, where K is the number of codes. Instead of computing the Cholesky decomposition of the whole matrix of dimension $KN \times KN$ (N is the number of symbols per code), the decomposition is performed on a submatrix of dimension $(KN_{sub}) \times (KN_{sub})$, where $N_{sub} < N$. The Cholesky decomposition of $A^H A$ and $(A^H A + \sigma^2 I)$ is approximated by repeatedly copying and thus extending the Cholesky factor of the submatrix of dimension $(KN_{sub}) \times (KN_{sub})$ to the full dimension.

A trade-off exists between a small value of N_{sub} leading to a significant reduction in the computational complexity, and a sufficiently large value providing only a small degradation in performance. Studies in [7, 8, 9, 10] show that there exists a value of N_{sub}, which reduces the complexity by an order of magnitude with a minimal degradation in performance.

In what follows, we derive an approximate Cholesky decomposition of a banded block Toeplitz matrix. Both $A^H A$ and $A^H A + \sigma^2 I$ matrices have a banded block Toeplitz structure as described by the following equation.

$$R = \begin{bmatrix} R_0 & R_1 & R_2 & R_3 & R_{L-1} & 0 & 0 & 0 & 0 & 0 & 0 & 0 \\ R_1^H & R_0 & R_1 & R_2 & R_3 & R_{L-1} & 0 & 0 & 0 & 0 & 0 & 0 \\ R_2^H & R_1^H & R_0 & R_1 & R_2 & R_3 & R_{L-1} & 0 & 0 & 0 & 0 & 0 \\ R_3^H & R_2^H & R_1^H & R_0 & R_1 & R_2 & R_3 & R_{L-1} & 0 & 0 & 0 & 0 \\ R_{L-1}^H & R_3^H & R_2^H & R_1^H & R_0 & R_1 & R_2 & R_3 & R_{L-1} & 0 & 0 & 0 \\ 0 & R_{L-1}^H & R_3^H & R_2^H & R_1^H & R_0 & R_1 & R_2 & R_3 & R_{L-1} & 0 & 0 \\ 0 & 0 & R_{L-1}^H & R_3^H & R_2^H & R_1^H & R_0 & R_1 & R_2 & R_3 & R_{L-1} & 0 \\ 0 & 0 & 0 & R_{L-1}^H & R_3^H & R_2^H & R_1^H & R_0 & R_1 & R_2 & R_3 & R_{L-1} \\ 0 & 0 & 0 & 0 & R_{L-1}^H & R_3^H & R_2^H & R_1^H & R_0 & R_1 & R_2 & R_3 \\ 0 & 0 & 0 & 0 & 0 & R_{L-1}^H & R_3^H & R_2^H & R_1^H & R_0 & R_1 & R_2 \\ 0 & 0 & 0 & 0 & 0 & 0 & R_{L-1}^H & R_3^H & R_2^H & R_1^H & R_0 & R_1 \\ 0 & 0 & 0 & 0 & 0 & 0 & 0 & R_{L-1}^H & R_3^H & R_2^H & R_1^H & R_0 \end{bmatrix}$$

where each block is of size K-by-K where K is the number of codes and L is the total number of symbols affected by the transmission of a single symbol. In the example above, $L = 5$. Assume that all codes have the same spreading factor, and denote by Ns the number of symbols per code.

The Cholesky decomposition of a banded matrix is also banded with the same bandwidth as the original matrix [5]. We therefore can write the Cholesky factor G in the following way,

$$G = \begin{bmatrix} G_{11} & 0 & 0 & 0 & 0 & 0 & 0 & 0 & 0 & 0 & 0 & 0 \\ G_{21} & G_{22} & 0 & 0 & 0 & 0 & 0 & 0 & 0 & 0 & 0 & 0 \\ G_{31} & G_{32} & G_{33} & 0 & 0 & 0 & 0 & 0 & 0 & 0 & 0 & 0 \\ G_{41} & G_{42} & G_{43} & G_{44} & 0 & 0 & 0 & 0 & 0 & 0 & 0 & 0 \\ G_{51} & G_{52} & G_{53} & G_{54} & G_{55} & 0 & 0 & 0 & 0 & 0 & 0 & 0 \\ 0 & G_{62} & G_{63} & G_{64} & G_{65} & G_{66} & 0 & 0 & 0 & 0 & 0 & 0 \\ 0 & 0 & G_{73} & G_{74} & G_{75} & G_{76} & G_{77} & 0 & 0 & 0 & 0 & 0 \\ 0 & 0 & 0 & G_{84} & G_{85} & G_{86} & G_{87} & G_{88} & 0 & 0 & 0 & 0 \\ 0 & 0 & 0 & 0 & G_{95} & G_{96} & G_{97} & G_{98} & G_{99} & 0 & 0 & 0 \\ 0 & 0 & 0 & 0 & 0 & G_{10,6} & G_{10,7} & G_{10,8} & G_{10,9} & G_{10,10} & 0 & 0 \\ 0 & 0 & 0 & 0 & 0 & 0 & G_{11,7} & G_{11,8} & G_{11,9} & G_{11,10} & G_{11,11} & 0 \\ 0 & 0 & 0 & 0 & 0 & 0 & 0 & G_{12,8} & G_{12,9} & G_{12,10} & G_{12,11} & G_{12,12} \end{bmatrix}$$

(1)

Our goal is to show that the Cholesky factor can be approximated by a periodic structure similar to that of the matrix R. This periodic approximation will enable us to replace the Cholesky decomposition of the matrix R, by a Cholesky decomposition of a submatrix of R with a significantly lower dimension. The Cholesky decomposition of R can then be approximated by a periodic extension of the Cholesky decomposition of the submatrix. This of course leads to a significant reduction in the complexity of the Cholesky decomposition step.

To show that the Cholesky decomposition of R can be approximated by a periodic structure, let us write the equations resulting from the equality $GG^H = R$. However, let us intentionally ignore the edge effect and consider only the Lth block column and the block columns on its right.

Equations for the 5th block column:

$$\begin{aligned}
R_0 &= |G_{51}|^2 + |G_{52}|^2 + |G_{53}|^2 + |G_{54}|^2 + |G_{55}|^2 \\
R_1^H &= G_{62}G_{52}^* + G_{63}G_{53}^* + G_{64}G_{54}^* + G_{65}G_{55}^* \\
R_2^H &= G_{73}G_{53}^* + G_{74}G_{54}^* + G_{75}G_{55}^* \\
R_3^H &= G_{84}G_{54}^* + G_{85}G_{55}^* \\
R_4^H &= G_{95}G_{55}^*
\end{aligned}$$

Equations for the 6th block column:

$$\begin{aligned}
R_0 &= |G_{62}|^2 + |G_{63}|^2 + |G_{64}|^2 + |G_{65}|^2 + |G_{66}|^2 \\
R_1^H &= G_{73}G_{63}^* + G_{74}G_{64}^* + G_{75}G_{65}^* + G_{76}G_{66}^* \\
R_2^H &= G_{84}G_{64}^* + G_{85}G_{65}^* + G_{86}G_{66}^* \\
R_3^H &= G_{95}G_{65}^* + G_{96}G_{66}^* \\
R_4^H &= G_{10,6}G_{66}^*
\end{aligned}$$

and so on.

The key is to notice that all of these equations are satisfied if

$$G_{ij} = G_{|i-j|} \tag{6.6}$$

Also, because G is lower triangular, all non-zero blocks satisfy $i \geq j$. Thus, if we ignore edge effects we can assume a block Toeplitz periodic structure of the Cholesky decomposition.

This observation suggests the following procedure for calculating an approximate Cholesky decomposition.

1. Evaluate the Cholesky decomposition of the leading submatrix of size K(2L-1)-by-K(2L-1) up to the Lth block column.
2. Extend the Cholesky factor to dimension KNs-by-KNs using Equation (6.6) where G_{i-j} are obtained from the Lth column block.

6.3.8 Parallel Interference Cancellation (PIC) Detectors

PIC detectors are based on the assumption that the decisions made by a conventional receivers are 'essentially' correct and only need to be 'somewhat corrected' by canceling interference introduced by other users.

The PIC algorithm models the received signal as the sum of KL signals, with each signal corresponding to one of L paths associated with each of the K codes. Each of the KL signals passes through a channel with a distinct impulse response.

The PIC detector processes the whole block of multiple users' data simultaneously. The interference cancellation is usually repeated over several stages, resulting in iterative detectors.

The philosophy of PIC can be described as follows. The matched filter outputs (for each of the KL signals) essentially produce the correct results. The only problem with the outputs is that they also contain interference from other signals. We can therefore make tentative decisions based on the matched filter outputs, then use these to calculate an estimate of interference to each received symbol and cancel it. Next, we use the new estimates on the received data and repeat the process again. The result is an iterative (or multistage) detector.

A typical detector structure is shown in Figure 6.10, where $\vec{r}$ is the received channel vector, $\vec{y}$ is the vector of matched filter outputs, $\vec{d}(m)$ is the mth iteration/stage symbol estimates of the data sequence *in each path independently*, $\vec{c}(m)$ is the mth iteration interference estimate, and $\vec{b}(m)$ is the mth iteration estimate of the actual data obtained after maximal ratio combining of the individual per-path data sequences.

6.3.9 Successive Interference Cancellers (SIC) Detectors

SIC Detectors are attractive MUD algorithms in the presence of a near–far effect [11–13]. Such a condition may exist in TDD in the UL due to poor power control and in the DL

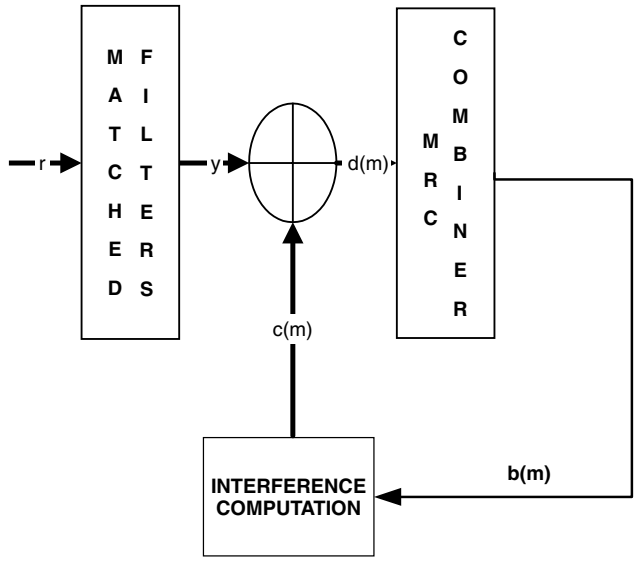

Figure 6.10 A Typical PIC Detector

because the BS may apply different gains to signals intended for different UE. However, most existing SIC and their variations have three main problems that can make them less attractive alternatives to JD algorithms.

First, although in general their complexity is less than JD receivers, it can be higher than approximate versions of JD algorithms [6, 7, 10]. The second problem is that most existing SIC algorithms employ a RAKE-like receiver to detect each user's signal, which does not optimally handle ISI because it implicitly assumes that the various multi-path images of a symbol are roughly confined to single symbol duration. The third problem is their significant loss in performance when two or more bursts arrive with the same power.

It is, however, possible to adaptively combine elements of SIC and JD receivers [14]. In each observation interval, it dynamically arranges users into different groups, with all users of approximately equal signal strength assigned to the same group. It then performs a group-wise JD to mitigate ISI and MAI within each group, and cancels MAI between groups via SIC. Thus, it improves the performance over conventional SIC in two ways. First, unlike conventional SIC, it maintains performance in the absence of a near-far effect by performing JD of bursts received with similar power. Second, unlike conventional RAKE-based SIC receivers, it optimally accounts for the ISI via Linear Sequence Estimation (LSE) that occurs implicitly during the JD of each group.

Simulation results presented later in this section show that, under certain conditions, it achieves a performance comparable to that of full JD. It achieves this performance at a lower average complexity than the full JD because, in most timeslots, it replaces the single-shot full JD by several smaller dimension JD stages. Since the JD complexity varies as the cube of the number of bursts, this scheme reduces the overall complexity.

A key application of the SIC-JD receiver is multi-code transmission, where some or all users transmit multiple bursts, which then arrive at the receiver with equal power. The SIC-JD can be configured to perform JD on multi-codes associated with the same user, and cancel MAI between groups of multi-codes via SIC.

6.3.10 Implementation and Performance

The Table 6.2 illustrates the relative computational loads of the various MUD algorithms.

We now illustrate the performance of the various MUD algorithms in various channels. The Figure 6.11 depicts the raw BER performance of a MMSE-BLE JD for a non-fading channel and compares it to a Single User lower bound. Eight users with Spreading Factor

Table 6.2 Relative Complexity of MUD Algorithms

Total number of Codes, K	**Relative Complexity (Approx. MMSE-BLE JD = 100%)**		
	Approx. MMSE-BLE JD %	**Optimized PIC Detector (3 iterations)**	**SIC-JD ($K/2$ groups of size 2 each)**
8	100	150	67
16	100	135	36

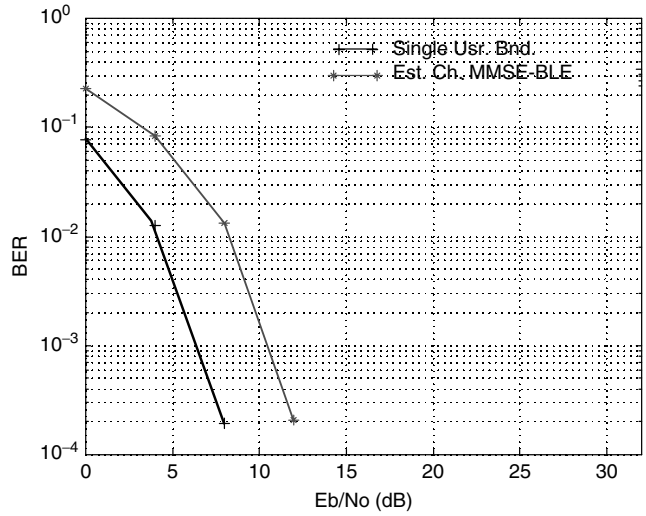

Figure 6.11 Raw BER vs Eb/No Performance of MMSE-JD in Non-Fading Channel

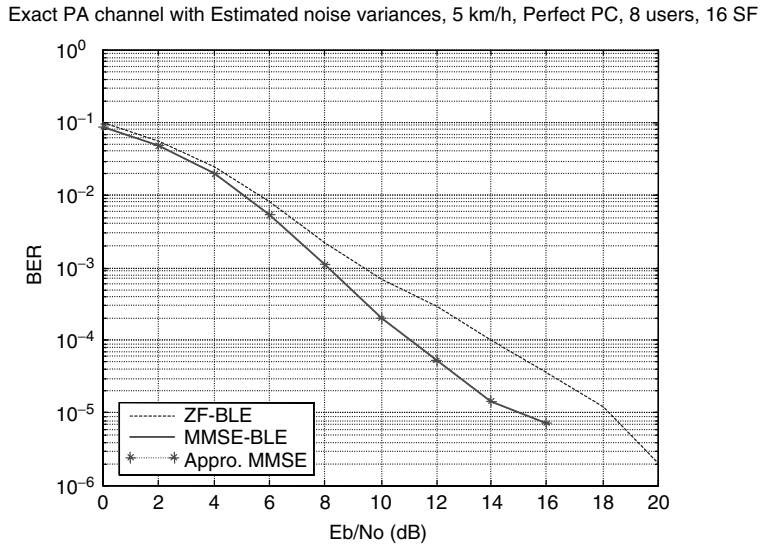

Figure 6.12 Raw BER vs Eb/No Performance of ZF-BLE JD and M, MMSE-BLE JD and Approx. MMSE-BLE JD with Known Pedestrian-A Channel

16 are assumed; 7 users are assumed to have perfect power control, whereas the 8th user's power is −10 dB off the optimal. The channel impulse response is 57 chips long.

Figure 6.12 compares the raw BER performance of ZF-BLE JD, MMSE-BLE JD and Approximate MMSE-BLE JD for a Pedestrian Channel (Type A) with known channel response (i.e. assuming perfect channel estimation). Again, 8 users with Spreading Factor 16 and perfect power control are assumed. Note that the approximation to the MMSE-BLE JD performs very well, and the MMSE-BLE JD outperforms the ZF-BLE JD.

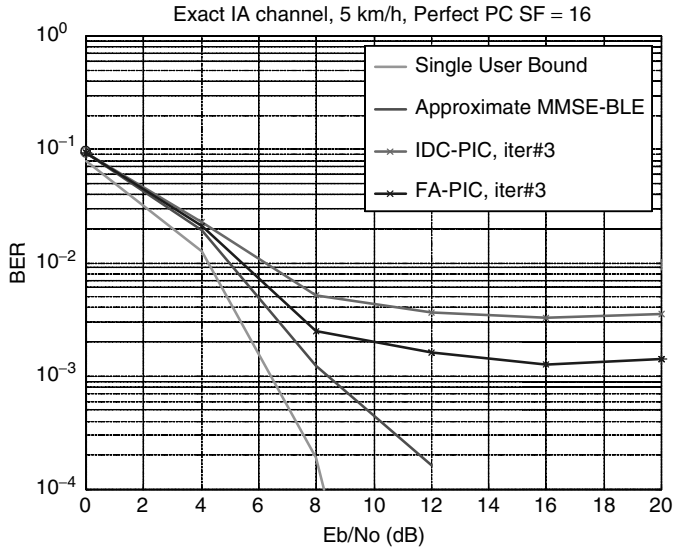

Figure 6.13 Raw BER vs Eb/No Performance of Approx. MMSE-BLE JD and PIC Detectors in Indoor-A channel

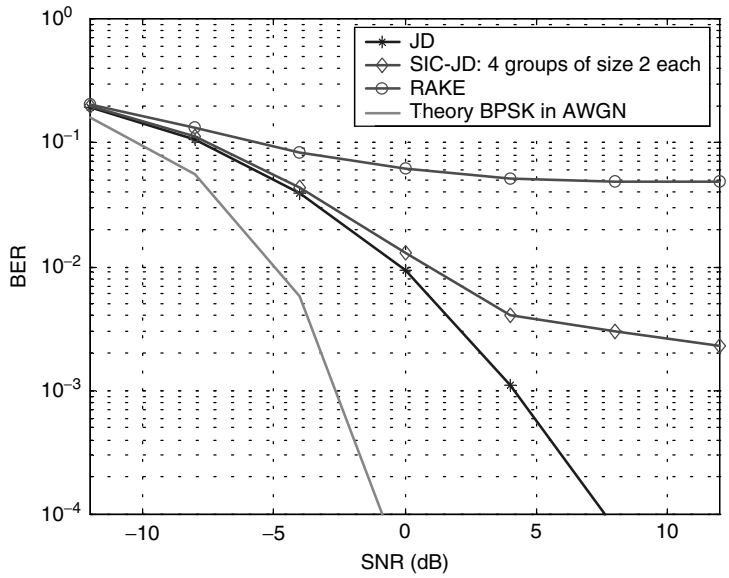

Figure 6.14 Raw BER vs Eb/No Performance of JD and SIC-JD

Figure 6.13 compares the performance of Approximate MMSE-BLE JD, standard PIC Detector and Optimized PIC Detector for an Indoor Channel (Type A). Eight users with Spreading Factor 16 are assumed; 7 users are assumed to have perfect power control, whereas the 8th user's power is – 10 dB off the optimal. The MMSE-BLE JD outperforms the PIC algorithm.

Finally, Figure 6.14 compares the raw BER performance of JD and SIC-JD. Also shown for reference are RAKE receiver performance and theoretical performance of BPSK in AWGN.

6.4 CELL SEARCH

Cell Search is an important and key function of the UE. It is typically performed when the UE is turned on and also periodically subsequently in order to determine if a neighboring cell is preferred over the current cell.

The Cell Search algorithm is used for the synchronization of User Equipment (UE) to the Base Station (BS). The UE accomplishes this procedure via a common downlink channel called Synchronization Channel (SCH/P) and via the midamble on the Primary Common Control Physical Channel (PCCPCH/P). In the following, we shall drop the suffix '/P' for notational simplicity.

The SCH is composed of a Primary Synchronization Code (PSC) and three Secondary Synchronization Codes (SSCs). The PSC and SSCs have a length of 256 chips. The PSC is an unmodulated code transmitted in the SCH. On the other hand, SSCs are modulated codes transmitted in the SCH. This is depicted in Figure 6.15. The SSC modulation depends on the frame. Frame 1 indicates an odd SFN (System Frame Number) and frame 2 indicates an even SFN. The SCH is offset from the timeslot boundary by t_{offset}. The value of t_{offset} has a 1-to-1 correspondence to the cell parameter, a number between 0 and 127 inclusive which identifies the basic midamble and scrambling code. A detailed description of PSC and SSCs code generation and allocation is given in [15].

The relative signal power of PSC is equal to the total SSC power. Hence, if the power of PSC is P, then the power of each SSC is P/3. The relative power between the SCH and the P-CCPCH is not specified but the power of P-CCPCH is to be 6 dB higher than the power of the SCH in all the 3GPP WG4 test cases.

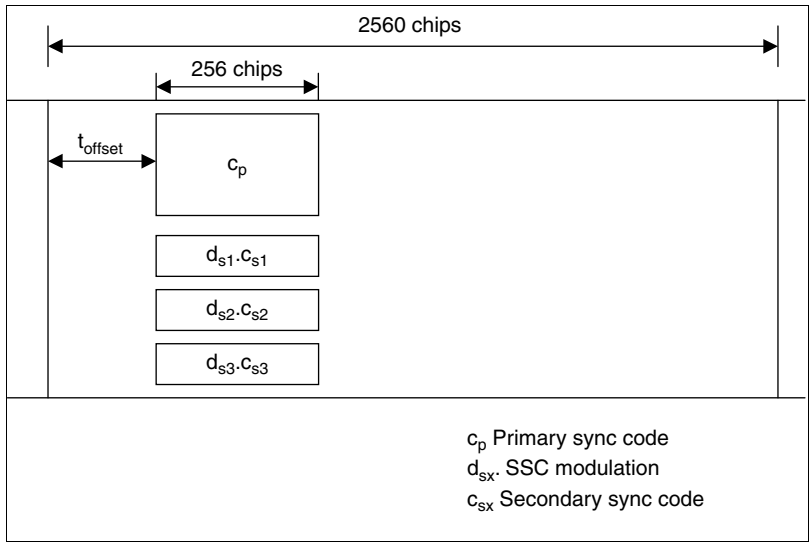

Figure 6.15 Physical Synchronization Channel (SCH/P) Timeslot

The SCH is transmitted in one or two timeslots of the 15-slot frame. The first slot is referred to as slot k, the second slot is referred to as slot $k + 8$. The P-CCPCH contains Broadcast Channel (BCH) information that is necessary for proper operation of UE. The P-CCPCH is transmitted in slot k. The transmission patterns of SCH and P-CCPCH in the frame can be split into two cases:

Case 1 : SCH and P-CCPCH are transmitted in timeslot k, where $k = 0, \ldots, 14$.

Case 2 : SCH is transmitted in two timeslots k and $k + 8$, where $k = 0, \ldots, 6$ and P-CCPCH is transmitted in slot k.

Essentially, Cell Search must locate the PSC (Step 1), determine the code group based on the SSCs (Step 2), and determine the cell parameter based on the midamble used for the P-CCPCH (Step 3).

There are two modes of cell search: Initial Cell Search and Targeted Cell Search (referred to as Target Cell Search in some TDD documents). Initial Cell Search is employed when the UE has no information about Node B. Targeted Cell Search is employed when the UE has some information about Node B. The UE employs Targeted Cell Search to identify signal strengths of neighboring cells or to measure the strength of the cell that it is camped on.

6.4.1 Basic Initial Cell Search Algorithm

During Initial Cell Search, the UE does not have any prior knowledge about the Physical Synchronization Channel (SCH) slot location in the frame or the scrambling code used on the BCH. Initial Cell Search algorithm consists of three sequential steps. Below is an initial high level description of the function of each of these three steps. In the subsequent parts of this chapter, these functions will be optimized for the best overall performance, resulting in a slight variation to the individual definitions of each of these three steps:

Step 1 identifies the SCH location in the frame and also can determine whether Case 1 or Case 2 is being utilized.

Step 2 determines the cell code group, the slot index (k or $k + 8$) and the even/odd SFN (frame 1 or frame 2).

Finally, Step 3 identifies the cell parameter (basic midamble code number and scrambling code number) from the P-CCPCH. The UE can now read the BCH and determine the value of k. The value of k locates the P-CCPCH timeslot within a frame and hence helps achieve frame synchronization. Step 3 may also be used to compute the midamble correlation value, for use by subsequent UE algorithms. Figure 6.16 depicts Initial Cell Search processing.

6.4.2 Basic Targeted Cell Search Algorithm

During the idle mode or active mode operations, the UE performs cell search procedure periodically to identify the signal strengths of the neighboring cells. This procedure is similar to the Initial Cell Search procedure, except that now the UE searches the neighboring

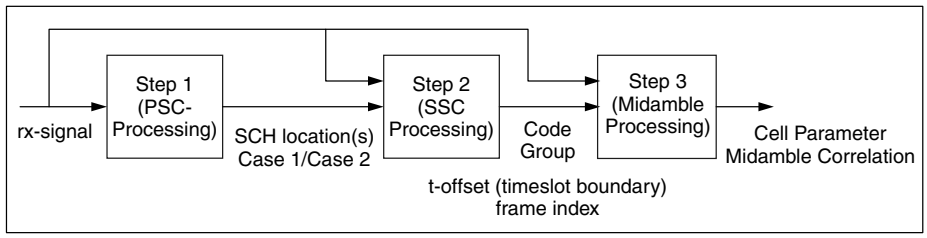

Figure 6.16 Initial Cell Search Algorithm Steps

cells according to a priority list obtained from the base station through the BCH. The UE has a priori information about the cell parameter (0–127) and the location of the SCH, thanks to the time synchronization of Node Bs. However, the SCH location is not exact, due to errors in Node B time synchronization and due to differences in propagation delays: (1) between the UE and Node B onto which the UE is presently camped: and (2) between the UE and the neighboring Node B, which is being searched for.

Essentially, there are two possibilities for Targeted Cell Search, which we shall call Targeted Cell Search 13 and Targeted Cell Search 3. Targeted Cell Search 13 performs Step 1 to determine the exact location of the PSC and Step 3 to determine the midamble correlation value. Targeted Cell Search 3 performs a variation of Step 3. It slides a 512-chip correlation across a window and selects the strongest correlation. Furthermore, the correlation may be computed in either the time domain or frequency domain. The SCH location is calculated by means of t_{offset} for the associated code group.

6.4.3 Hierarchical Golay Correlator

The Hierarchical Golay Correlator (HGC) is a reduced complexity implementation of the correlation process between PSC and the chip sampled receive signal at consecutive chip locations [16]. The HGC requires 13 complex additions rather than 256 complex additions for the correlation of PSC with the receive signal at each chip location. The details of the HGC are shown in Figure 6.17. The same HGC structure can also be used to estimate the noise (Auxiliary HGC).

In Figure 6.17 the weight vector W for the PSC is given as:

$$\begin{aligned} W &= [W_1, W_2, \ldots, W_8] \\ &= [1, 1, 1, 1, 1, 1, -1, 1] \end{aligned}$$

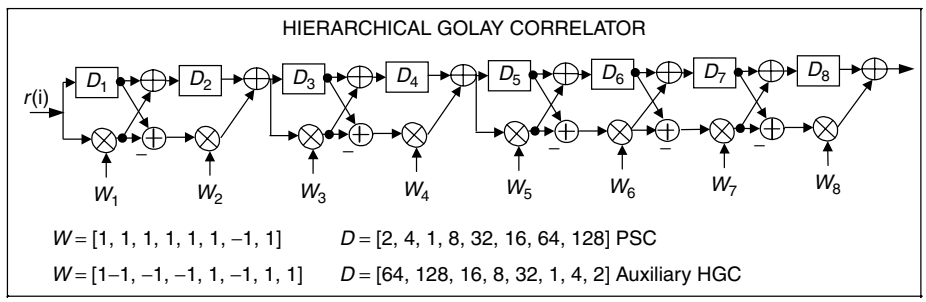

Figure 6.17 Hierarchical Golay Correlator

and the delay vector D for the PSC is given as:

$$D = [D_1, D_2, \ldots, D_8]$$
$$= [2, 4, 1, 8, 32, 16, 64, 128]$$

In Figure 6.17 a possible weight vector W for the Auxiliary HGC is given as:

$$W = [W_1, W_2, \ldots, W_8]$$
$$= [1, -1, -1, -1, 1, -1, 1, 1]$$

and the delay vector D for the Auxiliary HGC is given as:

$$D = [D_1, D_2, \ldots, D_8]$$
$$= [64, 128, 16, 8, 32, 1, 4, 2]$$

where the value of each delay element represent the number of registers in that delay. A similar implementation of HGC with the same complexity and performance is given in [17].

6.4.4 Auxiliary Algorithms

6.4.4.1 Start-up AGC

Since the Cell Search algorithms are executed at the very beginning of the receiver signal processing, it is necessary to employ Automatic Gain Control to maintain an adequate signal level. The output of the AGC amplifier is then converted to digital form by use of an Analog-to-Digital Converter. AGC is especially important for the Initial Cell Search, as the UE at this stage can neither distinguish between the Tx and Rx periods of a timeslot, nor the timeslot where SCH would occur. One approach is to step through several predetermined gain values from maximum to minimum gains.

6.4.4.2 Over-sampling

Before the onset of Cell Search, the UE does not have any time synchronization to the Base Station signals. If the input signal is sampled at the chip rate, there is a possibility that the signal quality at the sampling instants will be poor. Therefore, it is necessary for

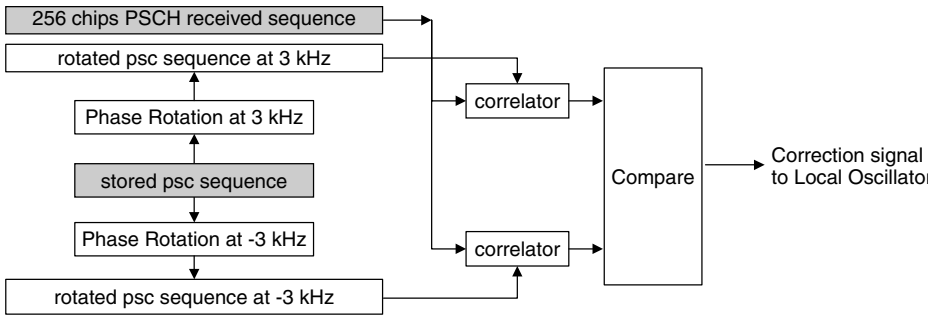

Figure 6.18 Example Algorithm for Start-up AFC

the UE to oversample (relative to the chip rate) the received signal, so that there are more than one rx-signal sample per chip.

6.4.4.3 Start-up AFC

The Start-up Automatic Frequency Control (AFC) may be used to reduce the frequency offset between Base Station (BS) and User Equipment during initial cell search procedure. This will allow longer integrations in Step 2. A simple way to do this is to generate multiple phase-rotated PSC sequences and correlate with the received signal. Figure 6.18 shows the case for 2 phase-rotated PSC sequences. When the two correlation values become equal on average, the local oscillator frequency matches that of Node B within a Doppler shift.

REFERENCES

[1] TS 25.222 V4.2.0 Technical Specification, 3rd Generation Partnership Project (3GPP); Technical Specification Group (TSG) Radio Access Network (RAN); Working Group 1 (WG1); Multiplexing and Channel coding (TDD).

[2] B. Steiner and P. Jung 'Optimum and Suboptimum Channel Estimation for the Uplink of CDMA Mobile Radio Systems with Joint Detection', *European Transactions on Telecommunications and Related Technologies*, **5**, no. 1, pp. 39–50, Jan.–Feb., 1994.

[3] S. Verdu, *Multiuser Detection*, Cambridge University Press, 1998.

[4] G. Klein and K. Kaleh, 'Zero Forcing and Minimum Mean Square-Error Equalization for Multiuser Detection in Code-Division Multiple-Access Channels', *IEEE Trans. on Vehicular Technology*, **45**, no. 2, pp. May 1996.

[5] G. H. Golub and C. F. Van Loan, *Matrix Computations*, The Johns Hopkins University Press, 1988.

[6] G. Klein, *Multiuser Detection of CDMA Signals: Algorithms and their Application to Cellular Mobile Radio*, VDI Verlag, 1996.

[7] H. R. Karimi and N. W. Anderson, 'A Novel and Efficient Solution to Block-Based Joint-Detection using Approximate Cholesky Factorization', *Personal, Indoor and Mobile Communications PIMRC' 98*, Conference Proceedings, **3**, pp. 1340–1345, Sept. 8–11, 1998, Boston, MA.

[8] Siemens, *Computational Complexity of TDD Mode*, Tdoc SMG2X 74/98, April 1998.

[9] Motorola, *Joint Detection Complexity in UTRA TDD*, Tdoc SMG2 UMTS L1 125/98, May 1998.

[10] InterDigital, 'Approximate Versions of the ZF-BLE and the MMSE-BLE' and 'Approximations of Cholesky Decomposition of Banded Block Toeplitz Matrix', internal reports, 1998.

[11] Pulin Patel and Jack Holtzman, 'Analysis of a Simple Successive Interference Cancellation Scheme in a DS/CDMA System', *IEEE J. Select. Areas in Communication*, **12**, no. 5, pp. 796–807, June 1994.

[12] Andrew L. C. Hiu and Khaled Ben Letaief, 'Successive Interference Cancellation for Multiuser Asynchronous DS/CDMA Detectors in Multipath Fading Links', *IEEE Trans. on Communications*, **46**, no. 3, pp. 384–391, March 1998.

[13] Lars K. Rasmussen, Teng J. Lim and Ann-Louise Johansson, 'A Matrix-Algebraic Approach to Successive Interference Cancellation in CDMA', *IEEE Trans. on Communications*, **48**, no. 1, pp. 145–151, January 2000.

[14] Raj Misra, Jung-Lin Pan and Ariela Zeira, 'A Computationally Efficient Hybrid of Joint Detection and Successive Interference Cancellation', VTC 2001 Spring, and 'Multi-user Detection using a Combination of Linear Sequence Estimation and Successive Interference Cancellation', IEEE 9th DSP workshop, Texas, Oct. 2000.

[15] TS 25.223 v4.1.1 Technical Specification, 3rd Generation Partnership Project (3GPP); Technical Specification Group (TSG) Radio Access Network (RAN); Working Group 1 (WG1); Spreading and Modulation (TDD).

[16] Siemens and Texas Instruments, '*Generalized Hierarchical Golay Sequence for PSC with Low Complexity Correlation Using Pruned Efficient Golay Correlators*', Tdoc TSGR1#5(99) 554, Cheju, South Korea, June 1–4, 1999.

[17] Texas Instruments, '*Secondary Synchronization Codes (SSC)* Corresponding to the Generalized Hierarchical Golay (GHG) PSC', TSGR1#5(99) 574, Cheju, South Korea, June 1–4, 1999.

7

Radio Resource Management

7.1 INTRODUCTION

The behavior of UMTS system is greatly influenced by a large number of factors including the number of active UEs, UE behavior (which can be influenced by the service being used, number of supported services, interference generated externally and within the system), and mobility of active UEs. Most of these factors are time-varying which adds another unpredictable dimension to the system. A critical element in the system performance is the optimal usage of the precious shared radio spectrum. Radio Resource Management (RRM) attempts to 'optimally' allocate, deallocate and reallocate radio resources. The optimization criterion may seek to maximize coverage, capacity or network stability, etc.

The RRM functions can be divided into those which act upon a single link between a UE and the BS ('link-based RRM'), those that act upon the multitude of all the radio links in a cell ('cell-based RRM') and those that act upon a group of cells ('network-based'). In this chapter, we shall focus on the link-based and cell-based RRM problems and solutions. The following are specific functions in these categories:

1. Cell-Based RRM Functions:
   (a) Cell/Network Initialization
   (b) Cell Optimization (for Coverage/Capacity)
   (c) Network Stability.
2. Link-Based RRM Functions:
   (a) Radio Link Establishment
   (b) Radio Link Quality Maintenance.

Cell/Network Initialization deals with initial allocation of Uplink and Downlink Timeslots as well as radio resources for all the radio channels, such as broadcast, common, dedicated and shared channel services.

An important aspect of Cell Optimization is a trade-off between the coverage and capacity. For example, large coverage distances may be achieved by increasing the transmitted power, but this can reduce the capacity due to increased interference. Similarly, supporting higher data rates to a larger number of users may increase capacity, but this may be only possible for UEs which are close to the Base Station, thus limiting the range.

Wideband TDD: WCDMA for the Unpaired Spectrum P.R. Chitrapu
© 2004 John Wiley & Sons, Ltd ISBN: 0-470-86104-5

This optimization/trade-off problem is tackled by Dynamic Channel Allocation (DCA) algorithms. Since these changes occur relatively slowly, these algorithms are also called Slow DCA algorithms.

Other algorithms that can be used to optimize coverage and capacity are Handovers and Common Channel Control. Handovers can optimize coverage by handing over users between adjacent coverage cells and can optimize capacity by switching users from a congested cell to another cell. Since capacity problems may arise on the Common Channels, Common Control algorithms could assist in Capacity Optimization.

Network Stability refers to the stability of the network during various phases of its operation, including periods of network congestion and overload. In such cases, RRM can be applied to control the number of admitted users, and/or to redistribute the radio resources among various cells to relieve congestion and overload in the affected cells. Thus, Network Stability is achieved by User Admission Control and Congestion Control. Additionally, DCA may also be used to quickly reconfigure physical channels, so as to avoid instability situations. Such DCA application is referred to as Fast DCA algorithm. Finally, Common Channel Control is also useful to control Network Stability, as arising from the common channels.

The establishment of Radio Links consists of configuring various aspects of the Radio Bearers, such as RLC, MAC, Logical/Transport/Physical Channel, etc. The physical layer algorithms are of the Fast DCA type.

Maintenance of Radio Link Quality consists of ensuring that the radio link has adequate power and signal quality to support the desired data rates. This may be achieved through transmit power control and rate adaptation. If the existing link quality cannot be maintained by any of these techniques, the radio link may be handed over to an adjacent cell.

Table 7.1 summarizes the relationship between RRM Tasks and RRM Algorithms.

Radio Resource Management algorithms are typically based on a number of radio-related measurements, made by the UE and/or the Network. In some cases, RRM algorithms may also be implemented with only a set of partial or estimated measurements or even without any measurements. The measurements related to Link-based RRM tasks are either on UE-specific dedicated links, or common links, which are not specific to a particular UE. Measurements related to Cell-based RRM tasks include load and congestion measurement.

Table 7.1 RRM Functions and Algorithms

RRM Function	RRM Algorithms			
Network Initialization	Slow DCA			
Coverage/Capacity Optimization	Slow DCA	Handover	Common Channel Control	
Network Stability	Fast DCA	User Admission Control	Congestion Control	Common Channel Control
Radio Link Establishment	Fast DCA			
Radio Link Quality	Power Control	Rate Control	Handover	

In this chapter, we will first describe the RRM Functions in some more detail and then discuss various core RRM algorithms used to implement these functions. It must be borne in mind that RRM algorithms are not mandated by the 3GPP standards. As such, only high-level principles will be provided. When details are given, they are included only as specific examples. Other realizations are possible.

7.2 RRM FUNCTIONS

In this section, we describe the RRM functions involved in various phases of the system operation. At the Cell level, we shall address the initial allocation of Cell Radio Resources and their steady state maintenance and optimization. At the Radio Link level, we shall describe Radio Bearer Establishment and subsequent maintenance and optimization. Each of these functions typically involves Physical Layer and Layer 2 aspects.

7.2.1 Cell Initialization

The RRM aspects of Cell Initialization include the following, some of which are discussed in subsequent sections:

1. Configuration of timeslots.
2. Allocation of Midambles.
3. Allocation of scrambling codes.
4. Allocation of primary synchronization codes.
5. Setup of Common Radio Measurements (details of Radio Measurements are given later in this chapter).

7.2.1.1 Configuration of Timeslots

Timeslots of a carrier are configured for the following purposes:

- timeslots for Uplink and Downlink;
- timeslots for Dedicated Traffic Channels (DCH);
- timeslots for Circuit Switched and Packet Switched Services;
- timeslots for Synchronization Channel (SCH) and Primary Common Control Physical Channel (PCCPCH) to carry Broadcast channel information. Note that configuring for PCCPCH also involves Case 1 or Case 2 determination.
- timeslots for Common Control Channels, namely RACH, FACH and PCH.

The allocation of timeslots should take into account the timeslots used by the adjacent cells (to minimize inter-cell interference), should provide sufficient capacity (to support the expected amount of traffic), and allocate timeslot power levels, etc. The allocation may be optimized by the Slow DCA algorithm.

7.2.1.2 Allocation of Scrambling Codes

Allocation of scrambling codes is an O&M function. This information is configured in Node B through the ‘Cell Setup Request’ (NBAP) message through the IE ‘Cell Parameter

ID', which identifies unambiguously the code group, t-offset, initial (i.e., even frame) scrambling code and basic midambles, and cell parameter cycling for a cell.

In TDD, scrambling codes are cell-specific. Recall that there are 128 applicable scrambling codes and they are divided into 32 different code groups. However, there are some codes which have the property that no matter what channelization code is used, the resulting 'spreading code' (which is understood as the combined channelization and scrambling code) could become a shifted version of another spreading code in the same cell. This makes multi-user detection very difficult and hence should be avoided.

Furthermore, when two different scrambling codes are assigned to two adjacent cells, there are two cases that may cause problems and should be avoided:

- The scrambling code of one cell is the shifted version of the scrambling code of the other cell, which implies that cross-correlation of the delayed version of the two codes could be very high. For example, codes #17, 25, 29, 50, 70, 89 and 117 are all shifted versions of the code #0.
- A spreading code in one cell is the shifted version of a spreading code in the other cell, which also implies that cross-correlation of delayed version of the two codes could be very high.

7.2.1.3 Allocation of Primary Synchronization Codes

The Primary Synchronization Code (PSC) sequence is the same for all the cells in the system. In order for UE to distinguish between different neighboring cells which are transmitting PSC in the same timeslot, neighboring cells should have different PSC t-offset, which is the offset from the start of the timeslot to the start of the PSC transmission.

Since there is a 1-1 relationship between the scrambling code groups and t-offset, neighboring cells should preferably have scrambling codes from different code groups.

7.2.2 Admission Control

The purpose of the admission control is to admit or deny new users during initial UE access or new radio access bearers during RAB Assignment/Reconfiguration or new radio links during, for example, handovers. The admission control tries to avoid overload situations and base its decisions on interference, resource measurements and priority. We shall discuss the first type of admission control as 'User Admission Control' and the latter two types as 'Call or Session' admission control, depending on whether RT or NRT services are involved. User Admission Control involves the assignment only of Signaling Radio Bearers, whereas the Call/Session Admission Control involves the assignment of (Traffic/Data) Radio Bearers.

7.2.2.1 User Admission Control (UAC)

The UAC algorithm is invoked when an Idle Mode UE requests an RRC signaling connection. The purpose of user admission control is to admit or reject the RRC signaling connection, based on the availability of the common resources (i.e. RACH/FACH), the availability of dedicated resources and the reason for the RRC connection request. Also

considered is the so-called Dynamic Persistence Level, which controls the rate at which UEs access RACH. If a UE is admitted, the UAC also determines whether to admit the UE to the Cell_FACH state or Cell_DCH state.

The reason for initiating a call may be one of the following: Originating/Terminating Conversational/Streaming/Interactive/Background call, Emergency call, Call re-establishment, Originating/Terminating high/low priority signaling, Cell re-selection, Inter-RAT cell change order, Registration, Detach, etc. For example, an emergency call will have highest preference for admission. Another example is when the reason is 'Originating Conversational Call'. In this case, the RACH resources are needed only for RAB setup, so that the user may be admitted even if the RACH/FACH channels are highly loaded.

Clearly, the UAC depends directly on the current state of loading or congestion of the RACH/FACH channels. This may be estimated by considering the number of successful transmissions over a time window.

When a single UE is added to the cell to use the RACH/T channel, the probability of performing a successful RACH transmission decreases for all UEs in the CELL_FACH state in the cell. This degradation of performance must be taken into account by the User Admission Control algorithm.

If the UE is directly admitted into the CELL_DCH state, then the loading or congestion on the available DCH resources must be considered in a similar manner. This matter is further addressed in the following section on Call Admission Control.

7.2.2.2 Call Admission Control

The Call Admission Control (CAC) function is responsible for deciding to admit a Call, based on the data rate and requested other QoS parameters, and finally has to allocate the required radio resources. The CAC process typically begins when a request is received by the C-RNC from a S-RNC. Typically, these decisions are based on system load and interference considerations. These are in turn determined via Radio Measurements (which may be fully or partially available or unavailable).

For example, if the current load state of the cell is 'Excessive', then CAC may consider admission into the cell only for handover. If the current state is 'High', then the CAC may choose to allocate guaranteed bit rate only. On the other hand, if the current Cell Load state is 'Normal', then CAC may consider to allocate the maximum bit rate requested.

Apart from load considerations, the CAC also verifies various system and UE constraints. These include the maximum power, the UE capabilities such as maximum number of timeslots that can be supported or the maximum number of codes that can be supported in a single timeslot, etc.

Once the admission decision has been made by the CAC, actual physical resources are allocated by some optimal algorithm, such as F-DCA.

7.2.3 Radio Bearer Establishment

The Radio Access Bearer (RAB) Establishment procedure is triggered when the Core Network (CN) wants to set up a bearer service for a specific user. This can be initiated by the user, in which case the user sends a NAS message (by means of the RRC Direct

Transfer procedure) to the CN requesting the bearer service, or by the CN (e.g., for an incoming call when the UE is already in CELL_FACH state). The signaling involved in the RAB establishment procedure was discussed in Chapter 5.

The Radio Access Bearer (RAB) is divided into Radio Bearer (RB) Service and Iu Bearer Service. A RAB can be composed of one or more RBs (up to 8). In this section, we will discuss the Radio Resource Management (RRM) aspects of the RB Establishment procedure. The RB establishment takes into account the RAB QoS parameters, the UE capabilities as well as Radio Measurement information. During the RB establishment process, RRM decides on the logical, transport and physical channel configuration. The former two functions are typically implemented in the S-RNC and the latter by the C-RNC, see Figure 7.1.

The key RAB QoS parameters are:

- traffic Class;
- maximum and guaranteed bit rate;
- delivery order;
- transfer delay;
- traffic handling priority;
- allocation/retention priority;
- maximum or pre-defined SDU size;
- SDU error ratio;
- residual BER;
- delivery of erroneous SDUs;
- RAB sub-flow combination (for AMR services).

For simplicity, we shall treat Conversational and Streaming Traffic Classes as Real Time (RT) services and the Interactive and Background Traffic Classes as Non-Real Time (NRT) services.

The outputs from the RRM functions in the SRNC are the ones related to logical and transport channel parameters, which include:

- Logical Channel and its Identity;
- RLC configuration: RLC size and RLC mode;

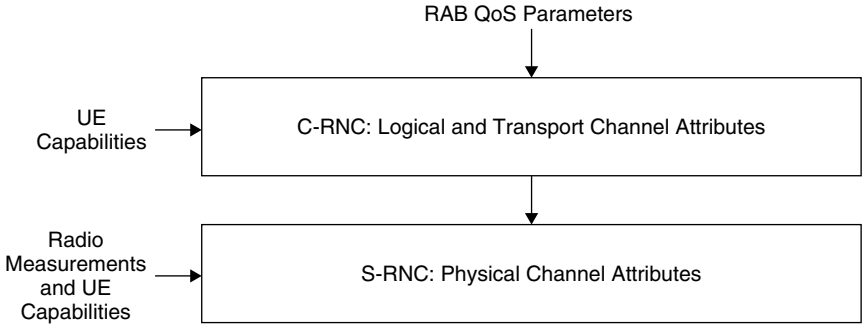

Figure 7.1 Steps Involved in Radio Bearer Establishment

- Transport Channel Type and (for dedicated channels) its Identity;
- Transport Format parameters (TFS): transport block size and number of blocks, TTI length, coding type and rate and CRC;
- Mapping to CCTrCH and CCTrCH parameters (TFCS).

The outputs from the RRM functions in the CRNC are related to physical channel parameters, which include timeslots and codes.

7.2.3.1 Logical Channel Mapping

A DTCH Logical Channel is used to carry the RB. The logical channel is then mapped into a transport channel.

Multiple Logical Channels may be mapped into a single TrCH, depending on the similarity of the QoS parameters of the Radio Bearer supported. The following QoS parameters are relevant to the decision:

- type of service (RT or NRT);
- traffic handling priority of the RB;
- RLC mode (AM, UM, TM);
- the rate disparity;
- the disparity of the BLER requirements.

When more than one logical channel is multiplexed onto the same Transport Channel by the MAC layer, two parameters must be defined: the MAC Logical Channel Priority (MLP) parameter and the Logical Channel Identity. The MLP parameter is used by the MAC in the transmit side to prioritize data transmission from different logical channels mapped to the same transport channel. The range of MLP is from 1 to 8, where 1 is the highest priority. The Logical Channel Identity is represented by the C/T field in the MAC header (discussed in Chapter 4), which is used by the MAC on the receive side in order to separate the data flow from one transport channel into different logical channels.

7.2.3.2 RLC Configuration

The RB QoS parameters can be used to determine the RLC mode and RLC PDU size. The traffic class can be used to determine the RLC mode of operation. For example, for conversational and streaming classes, carrying real-time traffic flows, Transparent Mode (RLC-TM) would be typically appropriate. Unacknowledged Mode (RLC-UM) could also be used for the streaming class (e.g., streaming video). Interactive/Background classes are intended for traditional non-real time applications, such as WWW browsing, email, Telnet, FTP, etc., which have looser delay requirements but require lower error rate. Thus Acknowledge Mode (RLC-AM) is appropriate for such services.

The QoS parameters may define the maximum SDU size or a pre-defined size. Each SDU received by RLC from the NAS may be segmented into RLC PDUs, whose size is defined as RLC PDU Size. Higher layer SDUs can also be concatenated into one RLC PDU. Whether or not the SDUs can be segmented or concatenated depends on the RLC mode of operation being used. Acknowledged and Unacknowledged modes (AM

and UM) allow for segmentation and concatenation. Transparent mode (RLC-TM) can be segmented or non-segmented.

For segmented RLC-TM, all the RLC PDUs carrying one SDU must be sent in one TTI and only segments from one SDU can be sent in one TTI (no SDU concatenation allowed). This implies that one SDU must be segmented into equal length RLC PDUs. For non-segmented RLC-TM, more than one RLC SDU can be sent in one TTI. In this case, all RLC PDUs must be the same size, equal to the SDU size.

For non-transparent modes (AM or UM), the choice of RLC Size is a trade-off between reducing the header overhead (for large RLC sizes) and reduced RLC PDU error rate (for smaller RLC sizes). Clearly, the radio channel conditions affect this trade-off.

RLC Size has a maximum value of 4992 bits and may or may not include MAC Header, depending on whether dedicated or common logical channels are used.

7.2.3.3 Transport Channel Mapping

For RT services, DCH/T is normally used. For RT services with Constant Bit Rate (CBR), the TFS will typically have two transport formats: one with the required maximum bit rate (as in the 'RAB Assignment Request' message) and one with transport block set size equal to zero. When there is no data to be sent, the transport format with transport block set size zero is used. Optionally, the network could configure a transport format with transport block size zero and transport block set size non-zero. In this case, parity bits (CRC) are sent when there is no data to be sent.

For voice services using AMR vocoders, the TFS/TFCS must have all transport format combinations required to support the rates supported by the codec (e.g., AMR with rates of 12.2 Kbps, 7.95 Kbps, 5.9 Kbps and 4.75 Kbps). The allowed combinations are given by the RAB QoS parameter 'RAB Sub-flow Combination'. Moreover, AMR voice service uses SID (silence descriptor) frames during silence periods, so that a special transport format is used in order to support the SID frames.

For NRT services, DCH/T or DSCH/T are typically used, with physical channels/resources being allocated only when there is data to be transferred. Typically, the DTCH is initially mapped onto the common channels (RACH and FACH) and the dedicated/shared channel is allocated when Traffic Volume Measurement (TVM) is reported indicating that the buffer occupancy has increased. This requires a transport channel type switching (i.e., switching from common channels to dedicated channel) on the UE and UTRAN sides. Another option is to allocate a low-rate dedicated channel in the beginning of the session, and change the rate allocated on a need basis, increasing the bandwidth when TVM is reported indicating that the buffer occupancy has increased.

7.2.3.3.1 TFS Determination

Recall that the Transport Format Set consists of a set of Transport Formats, with each Transport Format consisting of 'Transport Blocks, Coding and Transmission Time Interval' as follows:

- Semi-static or dynamic parameters:
  - Transmission Time Interval (TTI): 10, 20, 40, or 80 ms.
- Dynamic parameters (can change on a TTI basis):

  - transport block size;
  - number of transport blocks.
- Semi-static parameters:
  - code type: convolutional, turbo or no coding;
  - coding rate (for Convolutional Codes): 1/2 or 1/3;
  - CRC size: 0, 8, 12, 16, 24 bits;
  - rate matching parameter: integer from 1 to 256.

These parameters are typically determined as follows:

- TTI. The most important determinant for the TTI is the delay budget. It is probably most critical for voice applications, for which TTI may be chosen as 10 or 20 msec. If the delay budget is not critical, TTI may be set to 40 msecs.
- Transport block size and the number of transport blocks. These determine the data rate (= No. of Transport Blocks * Transport Block Size/TTI). Also, variable bit rates can be realized by defining a number of Transport Formats and dynamically varying the Transport Block Size and/or the Number of Transport Blocks.
- Coding parameters. These determine the actual error rates experienced by the Transport Blocks (referred to as BLER henceforth) realized in practice.
- Rate matching parameter. The relationship of rate matching parameters between different transport channels mapped into the same CCTrCH will determine the amount of puncturing/repetition for each transport channel. The RM values for each transport channel is set based on the relative QoS of transport channels multiplexed into a CCTrCH. This will depend on the requirement on error ratio, the coding type/rate applied and the RLC mode being used.

7.2.3.3.2 Block Error Rate (BLER) Requirement

Based on the Traffic Class, SDU Error Rate (part of the RAB Assignment Request Information) and the Logical Channel type, the SRNC determines a suitable error rate for the Transport Blocks. This parameter is referred to as Block Error Rate (BLER). Shown in Table 7.2 are some examples, for various traffic classes and logical channels.

This BLER must be satisfied by each Transport Channel that the Logical Channel is mapped to.

7.2.3.4 CCTrCH Mapping

The next step is to decide which TrCHs could be combined into composite CCTrCH. On the one hand, combining transport channels into a single composite increases flexibility

Table 7.2 Mapping of BLER Requirement

Traffic Class	Logical Channel	BLER (UL and DL)
Conversational	DTCH	10^{-2}
Streaming	DTCH	10^{-2}
Interactive/Background	DTCH	10^{-3}
Signaling AM/UM	DCCH	10^{-3}

and reduces channel set-up and overhead times. The latter translates into reduced latencies and access delays. On the other hand, the transport channels now compete for resources against each other. This may result in increased delay jitter and may not be appropriate for very delay sensitive applications.

The following are some guidelines for combining TrCHs:

- It is better not to combine TrCHs:
  - If BLER disparity is too high. Note that BLER disparity can, at some extent, be handled via the use of rate matching parameters and different coding type and rate. If the disparity is too high, however, it may be more appropriate to use separate CCTrCHs.
  - If independent power control loops are to be used for each TrCH.
- It is better to combine TrCHs:
  - If the added TrCH can be squeezed into the physical resources already predicted for use by the CCTrCH (without affecting QoS), while separating it will require more resources.

Note that dynamic mapping of TrCH is not allowed, which means that a TrCH cannot be mapped into different CCTrCHs in different frames. The mapping of the transport channels into a CCTrCH is represented by the TFCS, which specifies all allowed combinations of transport formats from different transport channels into one CCTrCH.

7.2.3.5 Physical Channel Mapping

In order to assign physical channel(s) to a service, the first step is to determine the 'amount of physical resources' required by the service (the maximum number of bits that need to be sent at every frame). For this purpose, we denote a basic unit of Physical Radio Resource as a radio Resource Unit (RU), and define it as a Single Time Slot and a Spreading Code with SF = 16.

A single timeslot with other values of SF, namely 8, 4, 2 or 1, can be treated as multiple RUs, namely 2, 4, 8 or 16 RUs respectively. If more than one timeslot is used, the equivalent RUs per each timeslot are simply added up. Accordingly, a single frequency carrier with 15 timeslots equals 15*16 = 240 RUs.

To map services into RUs, we define a Code Set as follows: $\{n_1(j), n_2(j), n_4(j), n_8(j), n_{16}(j)\}$ where $n_i(j)$ denotes number of codes with SF = i (i = 1, 2, 4, 8, 16) in the jth set of codes. Tables 7.3 and 7.4 give example mappings for various services in Uplink and Downlink (it should be noted that other mappings are possible as well). The Uplink and Downlink are distinguished as the allowed SFs differ in the two directions (only SF = 16 and 1 are allowed in the Downlink).

Given a service to be implemented, one of the Code Sets is chosen and the associated RUs are allocated to specific timeslots and codes in an optimal way. For example, the optimization process may consider interference and cell loading, and seek to maximize cell capacity. This topic is discussed in detail in Section 7.3.

Puncturing is often allowed for some services. The maximum amount of puncturing allowed is given by the parameter PL (Puncturing Limit). The PL value should be taken into account when determining the physical resources that need to be allocated to the service.

Table 7.3 RUs and Code Sets for Service Rates in the Downlink

Service Data Rate	RUs	Code Sets $\{n_1(j), n_2(j), n_4(j), n_8(j), n_{16}(j)\}$
12.2 Kbps	2	$j = 1\{0, 0, 0, 0, 2\}$
64 Kbps	5	$j = 1\{0, 0, 0, 0, 5\}$
144 Kbps	9	$j = 1\{0, 0, 0, 0, 9\}$
384 Kbps	24	$j = 1\{0, 0, 0, 0, 24\}$
1024 Kbps	96	$j = 1\{0, 0, 0, 0, 96\}$
2038 Kbps	143	$J = 1\{0, 0, 0, 0, 143\}$

Table 7.4 RUs and Code Sets for Service Rates in the Uplink

Service Data Rate	RUs	Code Sets $\{n_1(j), n_2(j), n_4(j), n_8(j), n_{16}(j)\}$
12.2 kbps	2	$j = 1\{0, 0, 0, 1, 0\}$
		$j = 2\{0, 0, 0, 0, 2\}$
64 Kbps	5	$j = 1\{0, 0, 1, 0, 1\}$
		$j = 2\{0, 0, 0, 2, 1\}$
		$j = 3\{0, 0, 0, 1, 3\}$
		$j = 4\{0, 0, 0, 0, 5\}$
144 Kbps	9	$j = 1\{0, 1, 0, 0, 1\}$
		$j = 2\{0, 0, 2, 0, 1\}$
		$j = 3\{0, 0, 1, 2, 1\}$
		$j = 4\{0, 0, 0, 4, 1\}$
384 Kbps	24	$j = 1\{0, 3, 0, 0, 0\}$
		$j = 2\{0, 2, 2, 0, 0\}$
		$j = 3\{0, 1, 4, 0, 0\}$
		$j = 4\{0, 0, 6, 0, 0\}$
1024 Kbps	96	$j = 1\{0, 12, 0, 0, 0\}$
		$j = 2\{0, 8, 8, 0, 0\}$

During the allocation of timeslots and codes, the UE capabilities must also be taken into account (e.g., the maximum number of timeslots that the user can support, the maximum number of physical channels per timeslot and per frame, spreading factor supported).

When assigning physical channels to the service, the RRM has basically three options:

- assign a dedicated channel without duration specified, in which case explicit signaling to the UE is required in order to release the channel (referred to as 'permanent DCH');
- assign a dedicated channel with duration specified, in which case the channel is automatically released by the UE after the duration expires (referred to as 'temporary DCH');
- assign shared channels to the UE.

For real-time services, such as a voice call, a 'permanent DCH' would be the preferred choice. For bursty applications, however, a 'temporary DCH' or a shared channel would be

preferred in order to maximize the system capacity. Another option for bursty application is to allocate a low-rate dedicated channel in the beginning of the session, which is used for signaling control, and change the bandwidth allocated on a need basis.

Besides determining the physical resource allocation, RRM is also responsible for the determination of initial power control parameters.

7.2.3.6 Example

We present an example showing how various services can be mapped onto CCTrCHs. More examples can be found in the Appendices of [1] and [2]. In this example, we consider the mapping of DL and UL 12.2 kbps RT services, which could be used by Voice Applications, see Table 7.5 and Figure 7.2.

7.2.4 Radio Bearer Maintenance

7.2.4.1 Radio Link Rate Control

As part of maintaining an existing Radio Link due to the intrinsically dynamic nature of a mobile radio link, in principle, any of the dynamic parameters of the Radio Bearer described in Section 7.2.3 may be controlled. A main parameter is the data rate, which may be controlled for RT and NRT services.

During steady state (CELL_DCH), the Rate Control may be triggered by the S-RNC based on the measurements indicating the quality of radio link such as, UE TX power and downlink code TX power. It may also be triggered by the CRNC, which is experiencing radio link congestion. Accordingly, the S-RNC may decide to adjust (reduce, increase or recover to an old value) the rate of a TrCH or CCTrCH. The actual amount of rate adjustment must take into account the rate specifications of the TrCH.

For example, if the TrCH has a maximum bit rate and guaranteed bit rate, if the reduced rate is higher than the guaranteed bit rate, then S-RNC may reduce the rate without renegotiation with the CN. Otherwise, S-RNC may renegotiate the guaranteed bit rate with the CN by sending a 'RAB Modify Request' to the CN.

If the TrCH has only a maximum bit rate but no guaranteed bit rate, S-RNC can reduce the rate without renegotiation with the CN. Once the actual rate adjustment is determined, the rate is controlled by re-configuring the attributes of transport or physical channel.

Table 7.5 Example Parameters for 12.2 kbps RT service

Parameter	Value
Information data rate (at the RB level)	12.2 kbps
RU's allocated	2 RU
Midamble	512 chips
Interleaving	20 ms
Power control	0 Bit/user
TFCI	16 Bit/user
Inband Signaling DCCH	2 kbps
Puncturing level at Code rate 1/3 : DCH of the DTCH/DCH of the DCCH	5%/0%

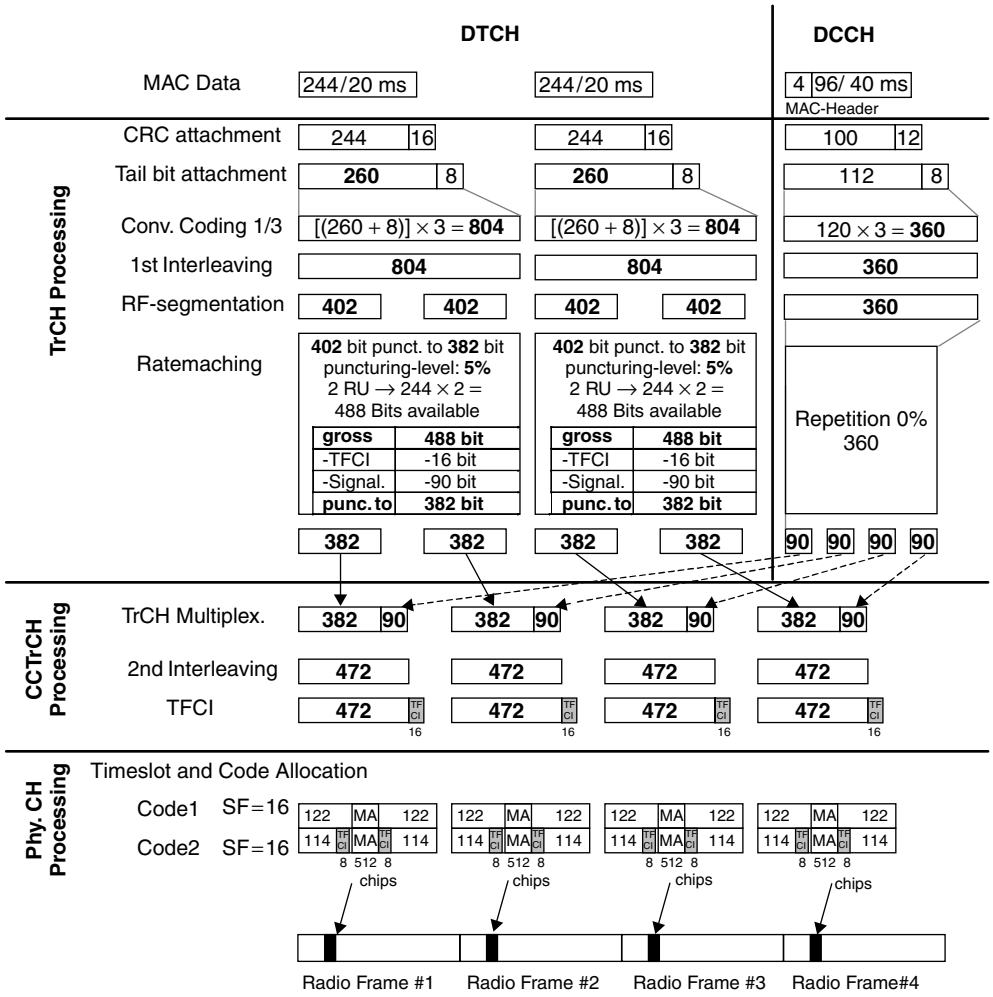

Figure 7.2 Example Mapping of Symmetric 12.2 kbps RT service

7.2.4.2 Transmit Power Control

Clearly, Transmit Power Control (or simply Power Control) is a critical aspect of a radio link that may be controlled to optimize the performance of not only a single radio link, but all radio links in a timeslot (which overlap in time and frequency). In Chapter 5, the basic mechanisms and structure of Power Control, namely Inner/Outer Loop Power Control and Open/Closed Power Control were described. In this section, we shall discuss the algorithmic aspects of these mechanisms.

In TDD, Power Control is defined at the level of Coded Composite Transport Channel (CCTrCH). Recall that a CCTrCH may support multiple Transport Channels, each with a different required QoS. Furthermore, a CCTrCH may be allocated to DPCH codes assigned to different timeslots, each with its own fast-varying interference. The design of the Transmit Power Control function must take both of these factors into account.

7.2.4.3 DL Inner Loop Power Control

Recall from Chapter 5 that DL Inner Loop Power Control essentially consists of the UE measuring the SIR of a TrCH, comparing with a target SIR (provided by the outer loop) and determining the appropriate power control (TPC) bits, followed by the BS extracting the TPC bits to adjust the DL transmitted power.

- SIR measurement by UE: According to 3GPP standards, SIR is defined as the ratio of RSCP over ISCP (times the spreading factor) where ISCP is defined to exclude removable interference, depending on the receiver implementation. Alternately, data field-based SIR algorithms (for example, MUD-based or MF-based) are also possible.
  SIR is measured for all TrCHs of a power-controlled CCTrCH.
  When there are gaps in DL transmission due to DTX (unanticipated gaps) or frame allocation (known gaps), a 'virtual SIR' needs to be estimated, essentially interpolating the signal power.
- TPC Command generation by UE: The TPC command is generated by combining measured SIRs for all the DPCHs associated with the power-controlled CCTrCH, then comparing it to the target SIR and generating TPC commands for the CCTrCH. If the CCTrCH is defined over multiple DL time slots, care must be taken in combining, as the SIR may be considerably different between various timeslots. As per 3GPP standards, TPC commands are either 00 or 11, indicating decreasing or increasing the transmit power by a step size. The step size can be 1, 2 or 3 dB and is defined by the UTRAN during call set up. The TPC bits are sent as the first 2 bits of second data field in a normal burst, with a spreading factor of 16.
- Power Control by BS: The TPC bits are extracted by the BS and used to increase or decrease the transmitted power by a value equal to step size. The BS may optionally check the TPC bits for reliability and, in the case of multi-slot CCTrCHs, even apply different power changes to different timeslots. Additionally, BS also ensures that transmitted power is within the maximum and minimum levels set by the UTRAN.
- Latency: Since the DL Inner Loop TPC is a closed loop process, the performance will be affected by the latencies involved in various functions of the closed loop. UE latencies include measurement of SIR, generation of TPC bits and mapping them onto UL CCTrCH. UTRAN latencies include extraction of TPC bits and amplifier power control.

Figure 7.3 shows the performance of an example DL Inner Loop algorithm, which uses different step sizes during transient and steady state phases. Note that the BLER converges to the target 10%, while using the minimum possible transmitted power (and hence SIR).

7.2.4.4 DL Outer Loop Power Control

Since this is an Open Loop process, it is implemented entirely by the UE. At the outset, the UE has to convert the target BLER of each transport channel to an initial target SIR for the CCTrCH. Since, in general, the target SIR required for a target BLER varies with channel conditions, the initial conversion may involve considerable error. Therefore, the Outer Loop TPC algorithm in the UE continually updates the target SIR depending upon the CRC checks for each TrCH.

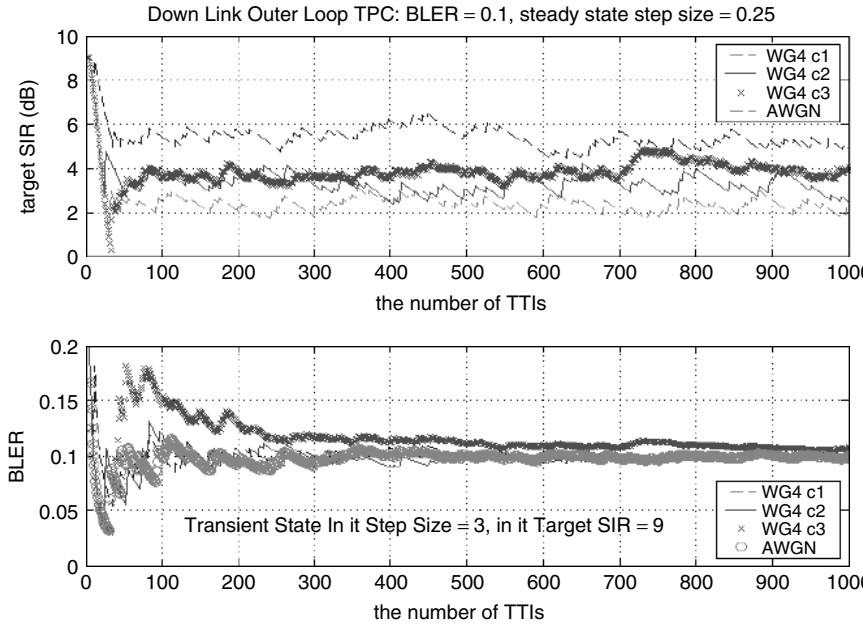

Figure 7.3 Example DL TPC Behavior for Steady-State Step Size = 0.25, Transient Step Size = 3 dB, Initial Target SIR = 9 dB and Target BLER = 0.1

7.2.4.5 UL Inner Loop Power Control

The UL Inner Loop TPC uses the Open Loop control, which is based on the pathloss measurement by assuming the pathloss in UL is similar to that in DL. The assumption is justified because the frequency bands for the UL and DL are the same. The pathloss is estimated by the UE by measuring the PCCPCH or any other beacon channel and comparing with the reference power of PCCPCH, which is sent by the UTRAN. Optionally, a pathloss reliability factor may also be computed by the UE.

The estimated pathloss is combined with a long-term pathloss using the pathloss reliability factor. The UE UL transmitted power is determined by the combined pathloss as well as a number of relevant parameters sent by the UTRAN. These parameters include the timeslot ISCP, the target SIR and a power control margin. Gain factors may be used to compensate for different spreading factors and difference in rate matching.

For example,

$$P_{UE} = \alpha L_{P-CCPCH} + (1-\alpha)L_0 + I_{BTS} + SIR_{TARGET} + CONSTANT\ value$$

where

P_{UE} : Transmitter power setting in dBm
$L_{P-CCPCH}$: Measured pathloss in dB.
L_0 : Long term average of pathloss in dB,
I_{BTS} : Time slot interference signal code power (ISCP) level measured in UL time slots at NodeB's receiver in dBm,
α : Weighting parameter that represents the quality of pathloss

measurements. α is calculated autonomously at the UE, subject to the maximum allowed value,

SIR_{TARGET} : Target SIR in dB,

Constant value : Power control margin.

7.2.4.6 UL Outer Loop Power Control

We recall that this is a closed loop control process, with the UTRAN determining the target SIR and accordingly commanding the UE to adjust its transmit power.

Initially the UTRAN will set target SIR for each CCTrCH based on the target BLER for each TrCH within the CCTrCH by using an assumed channel condition. Then the UTRAN will continuously evaluate the quality of the UL CCTrCH to adjust the target SIR upward or downward if necessary. The SIR adjustment algorithm typically consists of two states: transient and steady state. The algorithms are optimized for high convergence speed in the transient phase and reduced error in the steady state phase. For example, the transient phase adjustment algorithm could be:

$$SIR_{target}^{new} = SIR_{target}^{prev} + (SIR_{target}^{prev} - SIR_{measure}) + f(BLER_{est})$$

where:

SIR_{target}^{new} : Updated target SIR in dB

SIR_{target}^{prev} : Previous target SIR in dB

$BLER_{est}$: Estimated BLER using the CRC results of the reference TrCH

$f(x)$: Represents a correction factor.

Figure 7.4 illustrates the action of the UL Outer Loop behavior for an example algorithm, assuming a particular channel condition (termed Case 1) and a target BLER of about 1%. We see that the algorithm converges in about 400 msecs with a steady state SIR of approximately −5 dB.

7.2.5 Cell Maintenance

RRM functions are also responsible for monitoring and optimizing radio resources from a cell-level point of view. Cell-level maintenance includes steady-state optimization of common and dedicated resources, as well as congestion control.

7.2.5.1 Steady-State Optimization of Common Resources

As described in Chapter 4, the RACH and FACH channels are common resources that can be used for the exchange of control information and user data over the radio interface. The offered load to these channels can vary considerably during system operation, substantiating the need for mechanisms that dynamically optimize the usage of these channels.

7.2.5.1.1 RACH Control

The purpose of RACH control is to maintain optimal delay and throughput characteristics for uplink transmission over RACH. This is achieved by ensuring that the number of

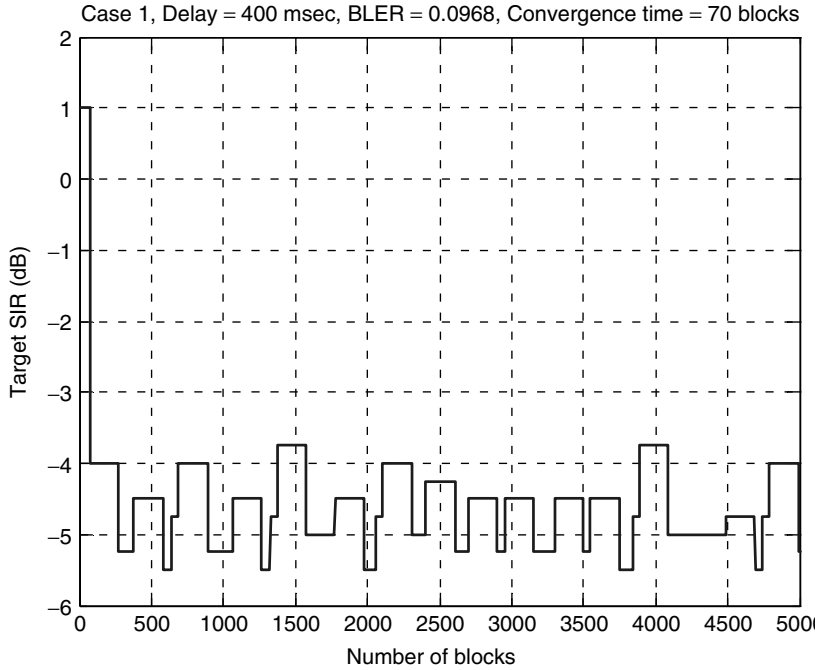

Figure 7.4 Example Performance of UL Outer Loop Power Control

transmission errors that occur due to PRACH code collisions and insufficient transmission power remain at acceptable levels.

RACH control may be achieved by managing the Dynamic Persistence Level and RACH Constant Value parameters. These two parameters, which are broadcast in the BCH, control the UE back-off process for RACH access and the UE transmission power over RACH. By increasing the Dynamic Persistence Level, the probability that two or more UE's transmit using the same PRACH code at the same time is reduced, yielding fewer collisions. On the other hand, increasing the Dynamic Persistence Level results in higher delays for RACH access. Similarly, increasing the RACH Constant Value parameter results in fewer errors due to increased transmission power, at the expense of increased system interference. Algorithm details differ based on their location within the radio access network: Node B or the RNC.

An example Node B implementation of RACH control employs error classification to manage RACH parameters. Every time an erroneous RACH transport block is detected at Node B, the cause of error is classified as either PRACH code collision or insufficient transmission power. Error classification can be performed with fairly high accuracy by comparing the measured SIR of the erroneous transport block to a predefined threshold. Statistics of successful and erroneous RACH transmissions (including error causes), observed over a period of time, are then used to calibrate the Dynamic Persistence Level and the RACH Constant Value parameters.

On the other hand, RNC implementations of RACH control must rely on less information to manage the RACH parameter (i.e. individual transport block SIR and power

measurements are not available). The algorithm that is proposed here relies on statistics of RACH successes and RACH errors, as well as theoretical probabilities of successes and errors.

First, a RACH access opportunity is defined as one PRACH code in one frame. The numbers of successful and failed RACH access opportunities are compiled over a multiple frames:

- $R_{SUCCESS}$ is the rate of successful access attempts per access opportunity.
- R_{ERROR} is the rate of failed access opportunities per access opportunity.

In the absence of errors due to sufficient transmission power, averaged statistics of $R_{SUCCESS}$ and R_{ERROR} should fall on the theoretical curve of $R_{SUCCESS}$ vs. R_{ERROR}. The Dynamic Persistence level is used to attain the desired operating point on the curve of $R_{SUCCESS}$ vs. R_{ERROR}. When observed statistics consistently diverge from theoretical statistics, i.e., too few successes for the number of observed failures, UE transmission power is at an inadequate level. In this case, the RACH Constant Value parameter should be modified.

Note that more complex RACH control algorithms could be developed, where ASC channel mapping, ASC PRACH partitioning and ASC persistence scaling factor could be dynamically optimized.

7.2.5.1.2 FACH Flow Control

In the downlink, when dedicated logical channels (DTCH or DCCH) are mapped to common transport channels (FACH), the MAC-d (at S-RNC) forwards the SDUs to the MAC-c (at C-RNC); the MAC-c schedules and sends the data to Node B in the FACH transport channel.

The MAC-d in the S-RNC selects the SDU sizes based on the RLC buffer occupancy and the currently allowed SDU sizes for each priority ('SDU length' in the flow control message), which is based upon the priority class of the data.

At the C-RNC, the PDUs are queued and then sent over FACH (MAC-c performs TFC selection and sends transport block sets to Node B in the FACH). This process is shown in Figure 7.5.

Initial Configuration for FACH Flow Control is a control plane protocol service and is achieved by configuring the following parameters:

- FACH scheduling priority: this is an integer value between 0 and 15. It is a function of the MAC Logical channel Priority (MLP) assigned to the Radio Bearer.
- MAC-c SDU length: available SDU length for a specific FACH priority. More than one SDU length can be defined.
- FACH initial window size: indicates how many SDUs with the given priority that the MAC-d can send to the MAC-c. If the window size is 255, that means that an unlimited number of SDUs may be sent.

Steady State FACH flow control is a user plane protocol service and is achieved by the CRNC with the 'FACH Flow Control' frame. It may be generated in response to a 'FACH Capacity Request' or at any other time. The Credits IE indicates the number of MAC-c SDUs that the S-RNC is allowed to transmit for the UE. At any time, the MAC-c can

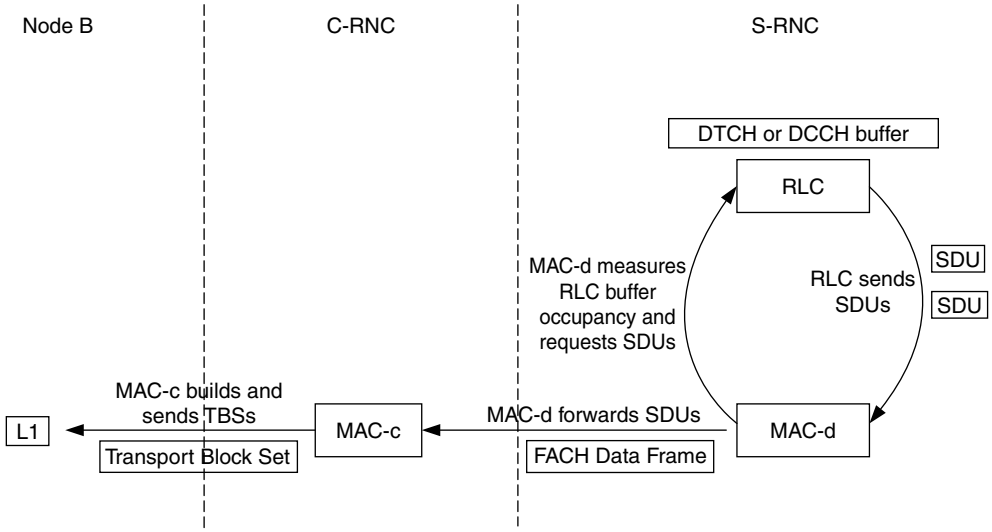

Figure 7.5 Overview of FACH Flow Control (DCCH/DTCH Mapped to FACH)

grant more credits or take away credits. If Credits IE = 0 (e.g. due to congestion in the C-RNC), the S-RNC will immediately stop transmission of MAC-c SDUs. If Credits IE = 'unlimited', then the SRNC may transmit an unlimited number of MAC-c SDUs. Every time a S-RNC uses all its credits for a specific priority, the C-RNC will check the current latency in the system and decide how many credits should be allowed to that S-RNC (for that priority), and send the 'FACH Flow Control' message to that S-RNC.

7.2.5.2 Steady-State Optimization of Dedicated Resources

As previously described, dedicated resources are assigned by the Call Admission Control function when the establishment of a call is requested. The Call Admission Control determines the optimal allocation based on the state of the system when the call request is made. However, the state of the system can noticeably change in steady state. Various events, such as user movement, the addition of a user in a neighboring cell and call termination make the state of the system highly dynamic.

The steady-state optimization functions for dedicated resources that are proposed here are the Background DCA function and the Code Management function.

7.2.5.2.1 Background DCA

The Background DCA function, residing in the RNC, is primarily responsible for background interference reduction. The function periodically re-evaluates physical channel allocations within the cell and reconfigures physical channels when a reduction in interference is predicted. Regular minimization of interference results in increased system capacity and reduced UE battery consumption.

Background DCA uses power and interference measurements from the Node B and UEs in order to determine if a better allocation of resources exists. The algorithm first determines the best possible re-allocation of physical resources. Once determined, the

new resource configuration is compared to the old one using a metric, which combines interference, fragmentation and other such factors. If the new configuration is beneficial, the physical resources are reconfigured; otherwise, no action is performed.

7.2.5.2.2 Code Management

The Code Management function is responsible for maintaining information regarding channelization code availability for each timeslot in the cell, and for allocating and releasing channelization codes. The method proposed for code management here employs a vector (code vector) for each timeslot to maintain channelization code information.

Recall that the TDD Uplink uses Orthogonal Variable Spreading Factor (OVSF) channelization codes, which are organized as a binary tree shown in Figure 3.9 in Chapter 3. We now illustrate the concept of Blocked Codes and Code Tree Fragmentation.

Suppose that the code $c_{Q=4}^{k=1}$ with SF = Q = 4 is allocated to a user, which means that all the codes in the sub-tree emanating from this code are used up. Of the remaining codes, however, some codes cannot be allocated due to the $c_{Q=4}^{k=1}$ allocation and are considered 'blocked codes'. In Figure 7.6, these are $c_{Q=2}^{k=1}$ and $c_{Q=1}^{k=1}$ codes.

An alternate code allocation is shown in Figure 7.7, where the 4 Resource Units associated with $c_{Q=4}^{k=1}$ are implemented by 4 codes each with a SF =16 ($c_{Q=16}^{k=1}$, $c_{Q=16}^{k=5}$, $c_{Q=16}^{k=9}$ and $c_{Q=16}^{k=13}$).

The number of blocked codes is greater here (= 11) and the code tree is more 'fragmented' than the tree in Figure 7.6. Clearly the less fragmented code tree in Figure 7.6 gives more flexibility in allocating the remaining available codes. Accordingly, the code allocation should be performed in such a way that the Code Tree Fragmentation is minimized.

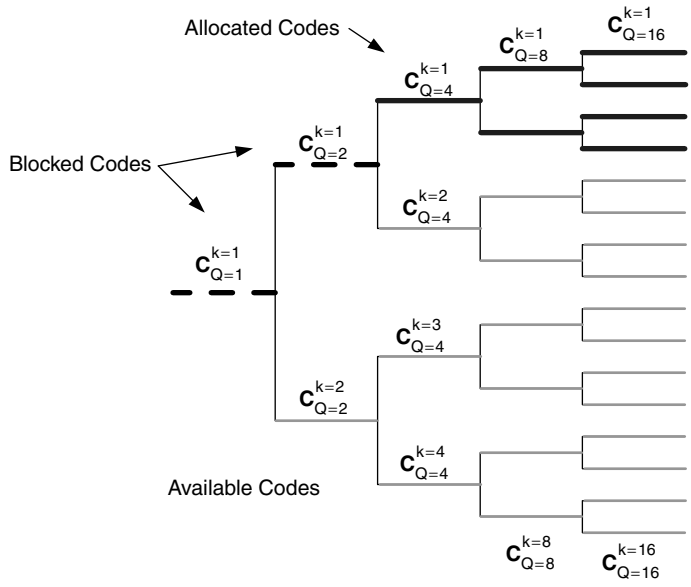

Figure 7.6 Blocked Codes

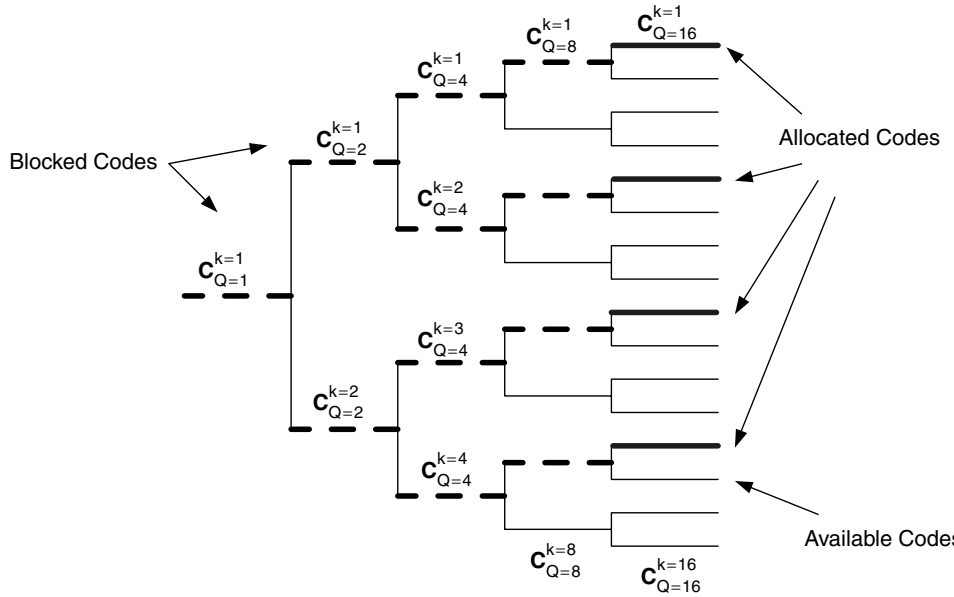

Figure 7.7 Alternate Code Allocation

In the downlink, only codes with spreading factor $Q = 16$ are used (except for 2 Mbps service, where $\mathrm{SF} = 1$ is used). When a code is needed, any available code can be allocated. A set of 'good' codes may be defined based on mutual correlation criteria and any code from this set can be selected.

7.2.5.3 Congestion Control

The Congestion Control function is responsible for alleviating cell-level congestion situations and ensuring overall system stability. Ideally, the Admission Control and steady-state optimization functions will prevent such congestion situations from occurring. However, overload states can arise due to the highly dynamic nature of a wireless system.

Specifically, the Congestion Control function monitors, detects and handles situations where the system reaches an overload state. An overload state is attained when radio resources have exhausted. In the downlink, congestion typically occurs when transmission power reaches the maximum Node B power rating in a given timeslot. At this point, Node B is unable to provide enough power to individual radio links, resulting in many unsatisfied (i.e. high BLER) and/or dropped radio links. In the uplink, congestion occurs when interference exceeds acceptable levels in a given timeslot. In such circumstances, UE's are unable to transmit at a level high enough to sustain the required SIR, resulting yet again in unsatisfied and/or dropped radio links.

Congestion Control can be divided into two different tasks: Fast Congestion Control (FCC) and Slow Congestion Control (SCC). The former is responsible for handling peak congestion situations, e.g. on a frame basis, whereas the latter deals with lasting overload states.

7.2.5.3.1 Fast Congestion Control

The FCC function for the downlink typically may be performed in Node B where timeslot power requirements are determined on a frame basis. When the required transmission power in a particular timeslot exceeds the maximum Node B transmit power, the FCC function may be invoked. Rather than uniformly reducing the transmission power of all transport channels, the FCC function intelligently adjusts the power of individual transport channels based on a rating of relative priorities.

The Frame Handling Priority, which is set at the RNC, can be used to establish relative priorities between different transport channels. For example, conversational class services, such as voice, should have higher priority than background class services, such as e-mail. FCC can either drop frames of lower priority transport channels or significantly reduce their power, resulting in more power available for higher priority transport channels.

7.2.5.3.2 Slow Congestion Control

The SCC function may be performed at the RNC in both uplink and downlink directions. SCC detects lasting congestion situations by monitoring averaged power and interference measurements, which are reported periodically by Node B.

Among others, two mechanisms to alleviate congestion are noted here. First, SCC should attempt a physical channel reconfiguration of resources from the congested timeslot into a different, less congested timeslot. This is achieved by invoking the F-DCA function for the allocation of channelization codes of one or more transport channels from the congested timeslot.

In the event that the reconfiguration mechanism fails or congestion persists, SCC may reduce the over-the-air interface data rate of users in the congested timeslot. SCC selects transport channels based on a prioritization scheme for which the maximum data rate is lowered. Once again, the Frame Handling Priority can be used to establish relative priorities between transports channels. By reducing the maximum data rate of transport channels, their power requirements diminish.

Note that careful coordination between FCC and SCC functions is required. If FCC consistently reduces the required timeslot power below the maximum allowed power, the SCC function might not detect lasting congestion situations in the downlink.

7.3 PHYSICAL LAYER RRM ALGORITHMS

7.3.1 Basic Concepts

In this section, we describe a number of key concepts that are necessary when describing and solving the problems of Physical Radio Resource Management.

7.3.1.1 Radio Measurements

Fundamental to Radio Resource Management are radio measurements, which indicate the quantities based on which Radio Resources are configured and reconfigured. These measurements essentially relate to signal power, interference power, errors, timing deviation, traffic volume, etc. Measurements may be made by the UE and the Network; they may be based on a single radio link, or a single cell or a group of cells. We shall now define these radio measurements in some detail.

UE measurements are as follows:

1. UE Transmitted Power: UE Transmitted Power is the total power transmitted by the UE on all UL DPCH codes in a specified timeslot in CELL_DCH state.
2. Received Signal Strength Indicator (RSSI): Received Signal Strength Indicator is the wideband received power within the channel bandwidth at a specific carrier in a specified downlink timeslot. The measurement is made on the signal at the output of the RRC filter, but before descrambling and dispreading.
3. Received Signal Code Power (RSCP): The Received Signal Code Power (RSCP) is based on the received Primary Common Control Physical Channel (PCCPCH/P) or any other beacon channel, such as SCCPCH/P and PICH/P and is given by the midamble correlation.
4. Timeslot Interference Signal Code Power (ISCP): This is the interference on the received signal from neighbor cells in a specified downlink timeslot measured on the midamble.
5. Signal-to-Interference-Ratio (SIR): SIR is the ratio of the signal power to the interference power for a DPCH within a timeslot, scaled by the Spreading factor of the DPCH code, i.e. SIR = (RSCP/ISCP)*SF. SIR measurements are made on a CCTrCH basis.
6. Block Error Rate (BLER): The BLER (Block Error Rate) is measured on a Transport Channel, by evaluating the CRC associated with transport blocks received on the downlink transport channel.
7. SFN-SFN Observed Time Difference: SFN-SFN observed time difference is the difference in number of chips between the reception times of frames from the current serving cell and a neighboring target cell. The Timing Difference depends on whether the two cells are SFN synchronized or not. If the SFNs are not synchronized, the UE must first decode the BCH of the target cell and then the difference in SFN values and the frame timing difference are used to calculate the SFN-SFN observed time difference. If the SFNs are synchronized, then the UE does not need to decode the BCH of the target cell. Instead, the UE measures the difference in chips between the start of a target cell timeslot and a serving cell timeslot. This difference is reported to the RRC as SFN-SFN observed time difference.

Node B Measurements are as follows:

1. Transmitted Carrier Power: Transmitted Carrier Power is the total transmit power for a specified DL timeslot (i.e. the sum of the individual code powers for all channels, common and dedicated, in the timeslot), measured at the antenna connector.
2. Transmitted Code Power: Transmitted Code Power is the power level for a specific DL DPCH code set by Node B transmit power control.
3. RSCP: The Received Signal Code Power (RSCP) is the received power on the midamble of one DPCH, PRACH or PUSCH code. For each code to be measured, a measurement sample is calculated in each frame, and a number of samples are averaged to produce a single measurement.
4. Timeslot ISCP: The physical layer measurement is the same as for the UE, except that the UTRAN must address the case where dual receive antenna diversity is used. In this case, the Node B estimates the channel response for each antenna received signal separately, and then averages the two results to compute a single measurement of ISCP.

5. SIR: As for the UE, the Signal to Interference Ratio (SIR) is measured on a specified DPCH code and is defined as (RSCP/ISCP)*SF, where SF is the spreading factor of the DPCH code. A number of timeslot samples are averaged together to produce a reliable measurement.
6. BER: Transport Channel BER is an estimation of the average bit error rate (BER) of a specific DCH or USCH.
7. RX Timing Deviation: The Rx Timing Deviation measurement is the estimate of the difference in time between the start of Node B reception of an UL burst and the start of transmission of Node B's timeslot.

7.3.1.2 Intra-Cell vs Inter-Cell Interference

In general, the interference in CDMA systems is of the Intra-Cell and Inter-Cell type. The former arises from multiple users in a cell whose signals overlap on time and frequency but are separate in code domain. Since in WTDD, users are assigned different timeslots also, the Intra-Cell Interference is limited to only those users active in the same timeslot. In other words, the Intra-Cell Interference is reduced to Intra-Timeslot Interference! Since the maximum number of users in a timeslot is limited to 16, the maximum Intra-Cell interference is quite limited. Another very significant advantage comes about due to the potential use of Multi-User Detectors for WTDD. Such detectors theoretically eliminate interference among users in the same timeslot, thereby potentially removing all Intra-Cell Interference altogether! In such cases, the WTDD systems would only have to minimize Inter-Cell Interference, which is due to users active in an overlapping Timeslot (and same carrier frequency) in another cell. If neighboring cells are assigned different timeslots, then the distance to interfering cells is increased, thereby reducing Inter-Cell Interference also.

7.3.1.3 Timeslot Fragmentation

The RUs required by a service (as explained in Section 7.2.2) are allocated to various timeslots. If the number of timeslots used is M, then a small M is said to pool the RUs into a small number of timeslots. On the other hand, a larger M is equivalent to distributing the RUs over more timeslots, resulting in the so-called Timeslot Fragmentation. One advantage of pooling RUs is that the UE transmits and receives only during a fraction of the frame period, potentially leading to battery power savings. Second, pooling RUs into a small number of RUs reduces the code-blocking in the remaining timeslots. Although pooling the codes into small number of timeslots creates increased interference among the codes, Multi-User Detection is capable, in principle, of eliminating the Intra-Timeslot Interference. Accordingly, we may associate a penalty with timeslot fragmentation. This penalty can then be taken into RRM considerations possibly along with other criteria.

As a simple example, the penalty associated with allocating the required RUs into M timeslots may be taken to be proportional to M. It is assumed that M does not exceed the maximum number of timeslots that a UE can support.

7.3.1.4 Power Rise

By aiming at regulating the received power despite the Rayleigh fading, fast power control is used (see later sections). Approximately, the variations in the instantaneous transmitted

power may be taken to be the inverse of the gain of the fading channel. Assuming that the average gain of the fading channel is unity, the average transmitted power would be the statistical mean of the inverse. It follows from elementary probability theory that, for common statistics of the gain of the fading channel, the average of the inverse is greater than unity. In other words, although the average channel gain is unity, the average transmitted power is greater than unity. This increase is termed as Power Rise due to Power Control.

On the downlink, the power rise increases the interference level of all users in the system and can simply be added to the Eb/No requirement measured at the received antenna. On the uplink, the power rise does not lead to increased interference in the serving cell but does so in the other cells of the system.

7.3.1.5 Noise Rise

When RUs are allocated to a timeslot, the transmitted Code power must be such that the Signal-to-Interference Ratios are met for satisfactory performance. This causes increased interference to other users in the same timeslot, so that they increase their respective transmitted power levels. In turn, this causes increased interference seen by the first user, to whom RU allocation was made. This phenomenon by which the interference seen by a user increases due to his/her own transmissions, is termed as Noise (strictly interference) rise. This process continues iteratively, until a balance occurs.

In general, the other users who cause the increase in Noise Rise may be within the same cell as the first user or other cells. In TDD, thanks to the Multi-User Detector, interference from users in the same cell can be completely eliminated (theoretically). As a result of this, Noise Rise may be assumed to be caused only by Inter-Cell Interference from adjacent cells using the same timeslot.

In general, Noise Rise depends upon the initial ISCP, Pathloss and SIR required for the service. Thus, we write

$$\text{Noise Rise} = \Delta ISCP(ISCP, pathloss, SIR)$$

Noise Rise is important to consider, when timeslot allocations are being made based on Interference considerations. This will be addressed in later sections.

7.3.1.6 Cell/Timeslot Load

At Node B, the Load in timeslot t of cell j, say $L\ (j,\ t)$, can be directly related to the amount of interference in timeslot t, namely $ISCP\ (j, t)$. The precise relationship is given as follows:

$$L(j,t) = 1 - \frac{N_O}{ISCP(j,t)}$$

where N_O represents the receiver noise level.

The above characterization of Load is useful for uplink applications; a Carrier Power-based characterization is possible for Downlink Load determination at Node B. It is given below:

$$L(j,t) = \frac{P(j,t)}{P_{\max}(j,t)}$$

where $P(j,t)$ and $P_{\max}(j,t)$ are the total carrier power and the maximum carrier power respectively.

Considering the collection of all the Timeslot Loads as the Cell Load, different RRM techniques may be invoked, depending on the Cell Load level.

7.3.2 Dynamic Channel Assignment (DCA) Algorithms

As discussed in the first part of this chapter, Dynamic Channel Allocation refers to the process of dynamically allocating Physical Radio Resources, namely timeslots and Channelization/Spreading Codes, to meet the QoS requirements to a single user as well as to an entire cell, in such a way as to minimize the self-interference in the system and maximize system capacity.

Depending on the application, DCA is referred to as Fast DCA, Slow DCA or Background DCA. Slow DCA is responsible for configuring the timeslots in each cell on a coarse time scale. On the other hand, Fast DCA is responsible for assigning timeslots and codes to different radio bearers on relatively short time scale. A central problem in all DCA schemes is the optimal allocation of codes to timeslots, taking into account interference and load. We shall devote the remaining part of this chapter to this topic.

Consider a set of K codes $\{C_i : 1 \le i \le K\}$ with spreading factors $\{SF_i : 1 \le i \le K\}$ respectively. Clearly the values of SF_i are 1, 2, 4, 8, 16 in the Uplink and 1, 16 in the downlink. To illustrate the complexity of the problem, we shall only consider uplink for this discussion. In terms of Resource Units, we can express the codes as $\{CRU_i = 16/SF_i : 1 \le i \le K\}$ respectively. The total number of RUs associated with the code set is $CRU = CRU_1 + CRU_2 + \cdots + CRU_K$. Let $\{M_1, M_2, M_4, M_8, M_{16}\}$ be the number of codes with 1, 2, 4, 8, 16 RUs respectively.

Let us assume that $N \le 15$ timeslots are designated for uplink traffic. As explained above, each timeslot has a maximum of 16 RUs. Let $\{ARU_1, ARU_2, \ldots .ARU_N\}$ be the number of RUs available in each of the N uplink timeslots. The total number of available RUs is $ARU = ARU_1 + ARU_2 + \cdots + ARU_N$. Let $\{N_1, N_2, N_3, N_4, N_5, N_6, \ldots N_{14}, N_{15}, N_{16}\}$ be the number of timeslots with 1,2,... 16 available RUs respectively.

Now consider allocating the codes to timeslots. There are M_{16} codes with 16 RUs, which can be allocated to N_{16} timeslots, each of which has 16 RUs available. This can be done in $\binom{N_{16}}{M_{16}}$ ways. Next there are M_8 codes with 8 RUs, which have to be allocated to timeslots having 8 or more RUs. The number of such timeslots equals $\{N_8 + \cdots + N_{14} + N_{15} + (N_{16} - M_{16})\}$. There are $\binom{N_8+\cdots+N_{15}+(N_{16}-M_{16})}{M_8}$ ways in which no more than 1 code with 8 RUs is allocated to each timeslot. However, there are $(N_{16} - M_{16})$ timeslots, which can be allotted 2 codes with 8 RUs. There are $\binom{N_8+\cdots+N_{15}+(N_{16}-M_{16})-1}{M_8-2}^{*}(N_{16} - M_{16})$ such allocations. Clearly, the number of allocations becomes larger and more complex to determine as we seek to allocate the remaining codes with smaller RUs.

Next, these allocations must be analyzed for validity and optimality. By validity, we mean that the allocation must not violate constraints such as UE multislot/multicode capability, Max power requirements, etc.

For optimality, there are a number of related considerations, namely, Interference, Transmitted Power, Timeslot Fragmentation and Code Fragmentation.

Let us first consider Interference. Clearly, each of the already allocated codes in each timeslot has a certain amount of interference, which is quantified by ISCP. The sum of the ISCPs of all codes in a timeslot is a Slot-ISCP. Allocation of new codes is preferably done in timeslots with the least amount of Slot-ISCP. Recall that interference can be classified as Intra-Cell and Inter-Cell Interference. Since Multi-User Detection is feasible in TDD systems, we may ignore Intra-Cell Interference. Thus we may consider the following optimization metric for Interference:

$$\mathrm{J_I} = \left(\sum_{k=1}^{K} I(k) \cdot \frac{16}{SF(k)} \right)$$

where K is the number of codes allocated to timeslot j and $I_j(k)$ is the ISCP after code k has been allocated, which includes the Noise (interference) rise, as follows:

$$\mathrm{I(k)} = \mathrm{ISCP} + \Delta ISCP(ISCP, Pathloss, SIR)$$

Now we consider the Transmitted Power as an optimization metric. It is obvious that the Transmitted Power at Node B must be minimized, as it relates to interference as well as capacity. The following is an example optimization metric in terms of power.

$$\mathrm{J_P} = \mathrm{ISCP} + \Delta ISCP(ISCP, Pathloss, SIR) + \mathrm{PathLoss} + \mathrm{SIR_T}$$

Timeslot Fragmentation refers to whether a given set of codes is allocated in a small number of timeslots or spread across a non-minimal set of timeslots. UEs whose multislot capability is limited would prefer allocation in the minimal set of timeslots, whereas UEs whose multicode capabilities are limited may prefer allocations in non-minimal set of timeslots. Similarly, UE battery consumption may be affected by the number of timeslots within which it has to transmit/receive as well. Finally, the usage of Multi-User Detectors may enable near complete cancellation of interference from codes in the same timeslot, so that it may be better to pack the codes in the smallest number of timeslots. Therefore, we see that there are multiple effects of the Timeslot Fragmentation phenomenon. An example optimization metric in terms of timeslot fragmentation is as follows:

$$\mathrm{J_T} = \begin{cases} p \cdot (j-1) & \text{if } 0 < j \leq C \\ \infty & \text{if } j > C \end{cases}$$

where p is a fragmentation penalty increment, and C is the maximum number of time slots that a UE can support.

Finally, Code Fragmentation is related to the fact the Channelization Codes are organized in a binary tree fashion, so that certain code allocations may block other codes from being available. Therefore, the following optimization metric may be used for taking code fragmentation into account:

$$\mathrm{J_C} = \frac{\text{Total slots assigned to CCTrCH}}{\text{Number of physical channels in this slot for same CCTrCH}}$$

Note that in the downlink, there is no Code Fragmentation problem.

In general, one could consider an optimization metric, which is a function of all the above:

$$J = f(J_I, J_P, J_T, J_C)$$

A special case is a linear weighted combination:

$$J = \alpha J_I + \beta J_P + \gamma J_T + \lambda J_C$$

The specific combination depends upon the context where the allocation is being done. Some examples are: Allocation of Resources during Call/Session Admission; Periodic Re-Allocation of Resources in order to optimize the Resource Utilization and Performance; Reactive Re-Allocation of Resources in order to mitigate extraordinary situations, such as excessive interference, etc. Accordingly, a number of related algorithms may be derived: F-DCA Admission, F-DCA Background, F-DCA Escape.

Due to the complexity of the problem, and due to the fact that the truly optimal solution is in general computationally impractical, we have to resort to sub-optimal and ad hoc solutions. Since there can be many such solutions, we shall illustrate two approaches, which capture the most essential ideas.

7.3.2.1 Allocation Algorithm 1

Assume that the cell has N(k) Resource Units available for allocation, with $0 \leq N(k) \leq 16$, and $1 \leq k \leq 15$. Note that N(k) is allowed to be '0', which indicates that kth Timeslot is either unavailable or unallocated for service. For example, it may be designated for traffic in the opposite direction.

The problem considered now is that of allocating a code set $\{n_1(j), n_2(j), n_4(j), n_8(j), n_{16}(j)\}$ for a fixed j, to various timeslots. That is, the code set consists of n_1 codes of $SF = 1$, n_2 codes with $SF = 2$, etc. Let the total number of codes be K and be denoted as $\{c_1, c_2, \ldots .c_K\}$.

The problem can be approached by considering all possible permutations of the 15 timeslots, and allocating the above codes to each timeslot sequence in a prescribed manner, evaluating each allocation with respect to some optimization metric and selecting the allocation with the 'best' metric.

Let the timeslot sequences be denoted as: $(S_1 \ldots S_N)$, where $N = 15!$. For example, $S_i = \{1, 3, 5, 7, 9, 11, 13, 15, 2, 4, 6, 8, 10, 12, 14\}$ for some i.

For each timeslot sequence, attempt to allocate the codes, starting with the code with the smallest Spreading Factor. (The idea behind starting with the smallest SF is that it will result in the smallest number of timeslots used.) In order for a code to be allocatable to a timeslot, a number of criteria should be satisfied. For example, the timeslot should have enough available resource units, and the allocation should be within the UE/Node B capabilities in terms of multislot and multicode capabilities. Additionally, transmit power limitations must be respected. For example, the required transmit power for a code that has been added can be written as:

$$TX\ Power_{new\ code} = \mathrm{ISCP} + \Delta ISCP(ISCP, Pathloss, SIR) + \mathrm{PathLoss} + \mathrm{SIR_T}$$

where PathLoss = PCCCPH/P transmit power – PCCPCH/P RSCP; SIR_T = SIR target of the code; and $\Delta ISCP$ = Noise Rise. Clearly the sum of powers of all transmitted codes (by the UE or Node-B) should be less than the maximum limits.

If the allocation to the first timeslot is successful, the allocation procedure is repeated for the next code in the Code Set. On the other hand, if the allocation was not successful, then the code is attempted to be allocated to the next timeslot in the timeslot sequence. This process is completed until all codes are exhausted, resulting in either a successful allocation to that timeslot sequence or not.

Let the number of successful allocations be N and denoted as $\{p_1, p_2, \ldots p_N\}$. In the jth allocation p_j, let the code c_k be assigned to timeslot i, given by $i = f_j(k)$.

Now the list of successful timeslot sequences is evaluated for some optimality criterion. In general, the 'optimality' metric may be expressed as a joint function of the Total Interference in the allocated timeslots and a suitably defined 'fragmentation penalty' [3]. We may express the Optimization Metric for the jth timeslot sequence as follows:

$$J(j) = g(I_T(j), FP(j))$$

where $I_T(j)$ is the total interference and $FP(j)$ is a suitably defined Fragmentation Penalty for the jth allocation. The relative significance (weight) given to each of these aspects is operator specific. For example, higher weight given to fragmentation penalty pools the timeslots (referred to as 'slot pooling'). Conversely, if low weight is given to the fragmentation penalty, codes will tend to get pooled in a small number of timeslots (referred to as 'code pooling').

The total interference is the sum of interferences over all allocated codes and can be expressed as:

$$I_T(j) = \left(\sum_{k=1}^{K} I(f_j(k)) \cdot \frac{16}{SF(k)} \right)$$

Where $I(f_j(k))$ is the ISCP after code k has been allocated to the timeslot $f_j(k)$.

An example definition of a Fragmentation Penalty is as follows:

$$frag_penalty(j) = \begin{cases} p \cdot (j-1) & \text{if } 0 < j \leq C \\ \infty & \text{if } j > C \end{cases}$$

where p is a fragmentation penalty increment, and C is the maximum number of time-slots that a UE can support.

The optimal allocation solution is found by computing the above metric for all possible valid allocations and finding the minimum.

7.3.2.1.1 Dedicated vs Common Measurements

We see from the above analysis that the algorithm needs UE-specific (dedicated) ISCP and Pathloss parameters. In certain cases, the network (where the RRM algorithms reside) may not have these measurements. For example, during handovers, the Network may not know the UE ISCP. Similarly, during UE-initiated NRT data services, the network may not know UE ISCP and Pathloss. In such cases, the algorithm may still be used based on ISCP measured at the Node B (non-UE specific) and an average Pathloss. This leads to Dedicated and Common Measurement-based Optimal Allocation algorithms.

7.3.2.1.2 Computationally Efficient Alternatives

The above exhaustive search algorithm is computationally expensive, because the total number of timeslot sequences is over 1.3 Trillion (15!). Computationally simpler alternatives, with small amount of suboptimality are therefore highly desirable.

Early approaches used a Random method, in which a timeslot from all available timeslots is chosen randomly [4]. If there are no usable RUs in the timeslot, another timeslot is selected randomly. The drawback of this approach is obvious, in that there is no sense of optimality at all!

The following is a method to reduce the number of timeslot sequences, based on the logic of minimizing interference and fragmentation (referred to as the Fast Permutation method). Define a Figure of Merit for each timeslot as the weighted sum of the relative interference of the timeslot and the number of usable resource units in the timeslot, as:

$$FOM_i = -\alpha \cdot \Delta I_i + \beta \cdot RU_{usable}(i)$$

where α is the weight parameter of the relative interference, β is the weight parameter of the usable resource units in the time slots $\{RU_{usable}(i), i = 1{:}15\}$, and ΔI_i is defined as $I_i - I_{\min}$, with I_i being the ISCP in timeslot i and $I_{\min}$ being the minimum ISCP among all timeslots. For a given pair of weight factors, the timeslots are sorted according to decreasing FOM. By choosing different weight pairs λ and β, a number of timeslot sequences is selected, which becomes the reduced search space for the optimization algorithm.

Figure 7.8 shows the performance of the three approaches, namely the N! method, Random method and Fast Permutation method. It is seen that the Fast Permutation algorithm is close to the Exhaustive Search algorithm.

7.3.2.2 Allocation Algorithm 2

We now present a simple scheme, in which the codes are allocated one by one, such that a joint load and fragmentation metric is minimized. The load takes into account the load of the current cell as well as neighboring cells.

Considering the uplink first, recall that the load is determined by interference considerations. Let *ISCP (i,t)*, measured at Node B, be the level of interference in timeslot *t* and

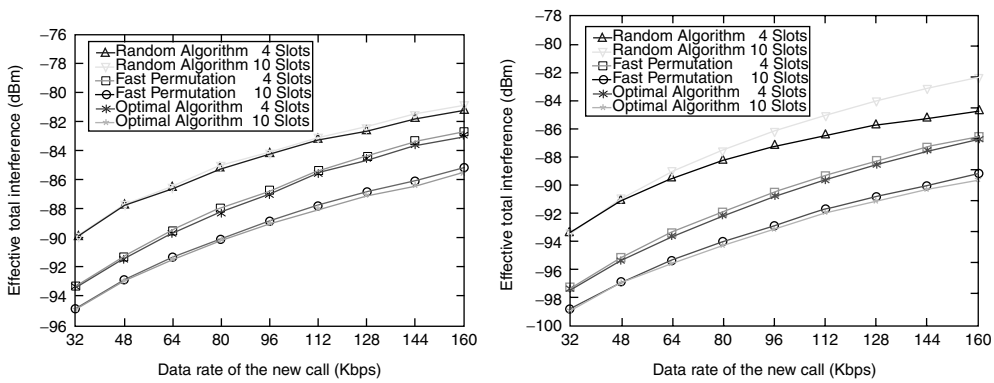

Figure 7.8 Performance of 3 DCA Algorithms (Uplink - Downlink)

cell i. Assume that one or more codes are added to this timeslot. If one or more codes are added to this timeslot, the interference increases due to the Noise Rise phenomenon. The new value of the interference may be predicted as follows:

$$ISCP_{PRED}(i,t) = ISCP(i,t) \times R(ISCP(i,t), A(i), SIR),$$

where $A(i)$ and SIR represent respectively the pathloss to the cell and the sum of the chip-level SIR targets of the added codes. $R(\cdot)$ represents the predicted increase in interference. When available, the UE pathloss measurement is used as an input to the noise rise function. Otherwise, the pathloss value parameter is used, which is determined from the distribution of pathlosses measured throughout the cell.

The ensuing load in timeslot t of cell i is computed as follows:

$$L(i,t) = 1 - \frac{N_O}{ISCP_{PRED}(i,t)}$$

where N_O represents the receiver noise level.

The load of timeslot t in neighboring cell j is computed as follows:

$$L(j,t) = 1 - \frac{N_O}{ISCP(j,t)}$$

for all $j \neq i$, with i being the original cell. *ISCP(j,t)* is the current ISCP measurement of the jth Node B.

We can now define an optimization metric in terms of Load and Timeslot Fragmentation. An example is the following:

$$L_{SYSTEM}(t) = \frac{L(i,t) + \sum_{j=1,}^{\Im_1} \alpha_j L(j,t)}{1 + \eta N(t)},$$

where $\Im_1$ represents the set of neighboring cells to be included in the overall system load with corresponding weight factors α_j. The denominator, $1 + \eta N(t)$, is a fragmentation adjustment factor, where η corresponds to the fragmentation adjustment parameter and $N(t)$ corresponds to the number of codes already assigned to this timeslot.

The allocation of codes to timeslots is now done as follows:

1. Select the code with the smallest SF in the code set. Select the first timeslot among available timeslots.
2. Compute the timeslot loads for the original cell and neighboring cells, as explained before. Compute the optimization metric for this timeslot.
3. Repeat Step 2 for all available timeslots. Select the timeslot t for which the optimization metric is the smallest.
4. Repeat Steps 1–3 for the remaining Codes.

In the downlink, a similar scheme is possible, which uses the transmit carrier power of the original cell and neighboring cells in order to allocate codes to timeslots.

The DL ISCP in timeslot t of a UE located in cell i, $I_{DL}(i,t)$, can be expressed as:

$$I_{DL}(i,t) = N_O + \sum_{j \in \Im_1} \frac{P_T(j,t)}{A(j)}$$

where N_O, $A(j)$ and $P_T(j,t)$ represent respectively the receiver noise level, the attenuation or the pathloss between the UE and cell j, and the total DL transmit power of cell j in timeslot t. Note that all quantities are expressed using a linear scale. $\Im_1$ defines the set of neighboring cells to be included in the interference prediction.

Since the pathloss from the UE to neighboring cells is unavailable, a statistical average may be used:

$$E[I_{DL}(i,t)] = N_O + \mu_1 \sum_{j \in \Im_1} P_T(j,t),$$

where μ_1 represents the mean of the link gains (i.e. the inverse of the pathloss) between the UE and Node Bs serving the neighboring cells. The mean link gains are cell deployment-specific parameters.

Once the expected interference level is calculated, the interference resulting from the addition of one or multiple codes in timeslot t of cell i is predicted using the Noise Rise function:

$$I_{DL}^{PRED}(i,t) = E[I_{DL}(i,t)] \times R(E[I_{DL}(i,t)], A(i), SIR)$$

where $A(i)$ and SIR represent respectively the pathloss to the target cell and the sum of the chip-level SIR targets of the added codes. $R(\cdot)$ represents the predicted increase in interference. When available, the UE pathloss measurement is used as an input to the Noise Rise function (e.g. during Handovers). Otherwise, the pathloss value parameter may be used, which is determined from the distribution of pathlosses measured throughout the cell. $I_{DL}^{PRED}(i,t)$, expressed in units of Watts, represents the predicted interference level following the addition of one or multiple codes in the candidate timeslot.

We can now define an optimization metric in terms of Interference and Timeslot Fragmentation. An example is the following:

$$I_{DL}^{W}(i,t) = \frac{I_{DL}^{PRED}(i,t)}{1 + \gamma N(t)}$$

The denominator, $1 + \gamma N(t)$, is a fragmentation adjustment factor, where γ corresponds to the fragmentation adjustment parameter and $N(t)$ corresponds to the number of codes already assigned to this timeslot.

The allocation of codes to timeslots is now carried out as follows:

1. Select the first code in the codes to be allocated. (Note that in DL, all codes have the same SF = 16.)
2. Consider a candidate timeslot for allocation and compute the predicted DL interference and the optimization metric.
3. Repeat Step 2 for all available timeslots. Select the timeslot t for which the optimization metric is the smallest.
4. Repeat Steps 1–3 for the remaining Codes.

REFERENCES

[1] 3GPP TR 25.102 v4.4.0, '3GPP; TSG RAN; UE Radio Transmission and Reception (TDD) (Release 4)', 2002–03.
[2] 3GPP TR 25.105 v4.4.0,'3GPP; TSG RAN; BS Radio Transmission and Reception (TDD) (Release 4)', 2002–03.
[3] G. Zhang and E. Ziera 'Fast Permutation Based Time Slot Allocation for 3G WCDMA TDD Systems', VTC 2003, Spring, Chjeju, South Korea.
[4] H. Yomo, A. Nakata and S. Hara, 'An Efficient Slot Allocation Algorithm to Accommodate Multimedia Traffic in CDMA/TDD-Based Wireless Communications Systems', VTC 2001 Fall, Atlantic City, New Jersey, USA.

8

Deployment Scenarios

8.1 TYPES OF DEPLOYMENT

TDD-based networks exhibit a great deal of flexibility in that they can be deployed in a number of commercially interesting scenarios. Broadly speaking, these can be classified into three categories: (1) Wide Area Broadband Data deployment; (2) Hot Zone deployment; and (3) Capacity Enhancement deployments.

Wide Area Broadband Data deployment scenario is characterized by a stand-alone (without FDD network) contiguous network over a wide area with nomadic broadband data services. Typical data rates are expected to be 384/144 (DL/UL) kbps. The coverage could be provided by co-siting the TDD antennas with GSM/GPRS sites. Both Circuit-switched and Packet-Switched connectivity is provided. Multiple RNCs are envisaged for the wide area coverage. It is estimated that some 35% CAPEX savings may be reaped by the radio network deployment compared to FDD-based coverage for similar services. For a detailed account of the assumptions and the analysis, see [1].

Capacity Enhancement deployment refers to an integrated FDD and TDD deployment, where TDD provides capacity relief. In this case, TDD provides all the services of FDD and supports full mobility of the user. It also avoids the need for cell splitting in case of traffic overload. The User Terminals are expected to be dual mode FDD-TDD devices. Compared to the FDD-based capacity solution, the TDD approach can provide up to 43% savings on CAPEX under certain conditions. For a detailed account of the assumptions and the analysis, see [1].

The Hot Zone deployment refers to providing WLAN-like services over a zonal coverage region. There are many intrinsic attributes of TDD that make such a zonal deployment attractive relative to WLAN. For example, the range, the radio resource management, interference mitigation, mobility, etc. These are discussed in the next chapter in comparison to other technologies. For now, it suffices to state that urban zonal coverage by TDD can provide upto 40% savings over WLAN-based deployment. For a detailed account of the assumptions and the analysis, see [1].

While the above discussion represents various 'commercial' deployment scenarios, the following types are distinguished from a site engineering point of view, which is determined by the location of the base station and users:

- over-the-rooftop macro or micro-cell deployment;
- street level deployment;
- indoor pico cells.

Wideband TDD: WCDMA for the Unpaired Spectrum P.R. Chitrapu
© 2004 John Wiley & Sons, Ltd ISBN: 0-470-86104-5

The first type of deployment uses sectorized antennas over the rooftop with users indoors and outdoors. This type of deployment could be considered as microcellular or macrocellular depending on the site-to-site distance. It is also referred to as the vehicular environment deployment [2]. The second type of deployment refers to microcells deployed in a relatively dense manner in the streets at 3–6 meters from the ground. In [2], this is referred to as the Manhattan-like deployment or Outdoor To Indoor and Pedestrian deployment. The last type of deployment considers indoor deployment where so-called pico-base stations are deployed inside buildings. It should be noted that the power used by the base stations and the size of the cells tend to be the largest in the vehicular environment and the smallest in the indoor office environment.

Of these, we shall concentrate on the over-the-rooftop deployment, which is the most challenging from coverage, capacity and coexistence points of view.

8.2 CAPACITY AND COVERAGE

8.2.1 Network Capacity

The revenues that an operator may obtain from the deployment of a network depend on the number of subscribers that can be supported. Therefore it is useful to define network capacity as the number of subscribers that can be supported by the network for a given application or a set of applications, assuming an acceptable level of service. The level of service is usually determined in terms of blocking (for circuit-switched calls, e.g. voice) or latency (for packet-switched calls, e.g. web browsing).

A related concept is that of the cell capacity, defined as the number of users that can be instantaneously supported by the cell. Several factors affect the cell capacity:

- The nature of the deployment and the physical environment (Section 8.1)
- Operator preferences with regards to possible trade-offs between capacity, coverage and data rates, between uniform coverage through the cell area, on one hand, to gradual decrease in data rates, on the other. The former will result in reduced cell capacity but may well be suited to high end services while the latter maximizes capacity at the expense of reducing user expectations.
- Features unique to TDD that, if employed, increase cell capacity and coverage. These features include the Multi-User Detection (MUD) and Dynamic Channel Allocation (DCA).

As discussed in Chapter 6, MUD is a standard TDD receiver technique that effectively cancels a large fraction of the intra-cell interference. Due to the usage of short codes, the implementation of MUD can be done in a cost-effective manner in both the handset and the base station. As explained in Chapter 7, DCA is a procedure of dynamically allocating slots to users according to measurements. In particular, interference measurement is one of the factors used to select suitable slots. The outcome of the usage of the procedure is that users that transmit at high power or that require high downlink power tend to be segregated in different slots. This outcome effectively reduces the inter-cell interference, which in turn improves the efficiency of the MUD in removing intra-cell interference. Combined, they effectively provide full coverage at high data rates and high capacity, in some cases limited only by the code capacity.

8.2.2 Analysis

For the sake of analysis, the cell capacity is defined as the number of users that can simultaneously transmit (uplink) or receive (downlink) when the outage is 5% (percentage of non-served users). An outage can be a user blocked due to lack of code resources or a user dropped due to its inability to maintain an acceptable signal-to-interference ratio.

It is to be kept in mind that the capacity is directly dependent upon the number of Resource Units (RUs) per timeslot (TS) as well as the mapping of various services in terms of RUs. This relationship is non-linear and radio channel allocation algorithms significantly affect the capacity results.

8.2.2.1 Models for Deployment

For the sake of analysis, the usually irregular pattern of site placement is generally modeled with regular geometry with implied propagation laws:

- Over-the-rooftop deployment is assumed to occur in hexagonal, sometimes sectorized cells. Pedestrian, outdoor to indoor or vehicular propagation models or their combinations are used [2].
- Street-level deployment is assumed to occur in regularly placed base stations in streets arranged in a Manhattan-like grid [2]. Outdoor to indoor or pedestrian propagation models are used.
- Pico deployment assumes office environment. Indoor propagation models are used.

Results in this chapter will focus on the over-the-rooftop deployment.

8.2.2.2 Models for Analysis

In TDD, traffic channels are assigned to different slots, which may be code or resource limited. Moreover, a typical load is not uniform, because the number of users per timeslot is small and the law of large numbers does not apply (as it does in FDD). Thus, theoretical capacity assessments are not straightforward. Therefore, unlike FDD, either the pseudo-analytic method or a static simulator must be used to determine capacity.

8.2.2.2.1 Pseudo-Analytic Approach

This method is based on computing the achievable signal to interference ratio based on propagation laws and comparing to the requirements derived from link level simulations. This is a quick method particularly applicable to downlink coverage estimates in an arbitrary geometry. Its capacity results are not, however, very accurate and calibration by other means may be necessary.

The incoming signal from the base stations varies according to the sum of lognormal random variables arising from the slow fading. Since the sum of these lognormal random variables is not amenable to closed-form solution, the SIR for each x-y coordinate is averaged over a large number of trials. The SIR or, more accurately, I_{or}/I_{oc}, is compared

against the required I_{or}/I_{oc} to determine whether or not there is a sufficient signal-to-interference ratio to support communications. Ior and Ioc are defined as:

$$I_{or} = \text{Total transmit power at the Node B antenna connector,}$$

$$I_{oc} = \text{Total noise power at the UE antenna connector.}$$

If the probability is at least 0.9 that I_{or}/I_{oc} at a given x-y coordinate exceeds its requirement, then that point is considered to be 'covered'. The required level is determined through link level simulations and is affected by things like FEC, transmit diversity, power control etc.

The capacity (in terms of number of users that can be supported) may be determined in one of the following ways.

First, using the $(I_{or}/I_{oc})_{available}$ - $(I_{or}/I_{oc})_{required}$ criterion employed to determine coverage, the number of simultaneous services (of a single type) that can be supported at a given x-y coordinate is as shown below:

$$N_{users} = 10^{\frac{(I_{or}/I_{oc})_{available} - (I_{or}/I_{oc})_{required}}{10}} \quad ; \quad \forall(\hat{I}_{or}/I_{oc})_{available} \geq (\hat{I}_{or}/I_{oc})_{required} \tag{8.1}$$

where Ior and Ioc are defined earlier and

$$\hat{I}_{or} = \text{Received power at the UE antenna connector.}$$

The available I_{or}/I_{oc} may be taken as the 50th percentile level, which provides a more realistic estimate of the average capacity. The overall capacity within the cell is the weighted average (by area) of N_{users} across the cell.

Alternatively, the available SIR or E_b/N_0 can be calculated and the number of users can be determined as shown below:

$$\frac{E_b}{N_0} = \frac{G_p E_c}{\alpha(\hat{I}_{or} - E_c) + I_{oc}} = \frac{G_p\left(\frac{E_c}{I_{or}}\right)}{\alpha\left(1 - \frac{E_c}{I_{or}}\right) + \frac{I_{oc}}{\hat{I}_{or}}} \tag{8.2}$$

where:

$$G_p = \text{Processing Gain (number of chips per bit),}$$

$$E_c = \text{Received total energy per chip,}$$

$$\alpha = \text{Average Orthogonality Factor of Radio links } 0 \leq \alpha \leq 1.$$

For cases in which all users are in the same location, N_{users} is simply the reciprocal of E_c/I_{or} and is given by:

$$N_{users} = \frac{G_p/(E_b/N_0)_{req} + \alpha}{\alpha + (\hat{I}_{or}/I_{oc})^{-1}} \tag{8.3}$$

Example: Consider a downlink utility in which the calculated signal-to-interference levels are compared against SIR requirements at various points in a grid (which represent possible UE locations). The network considered is a seven-cell deployment (one sector per

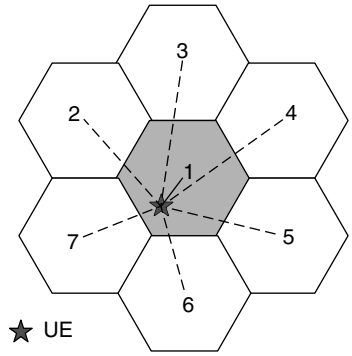

Figure 8.1 Example of Cell Layout

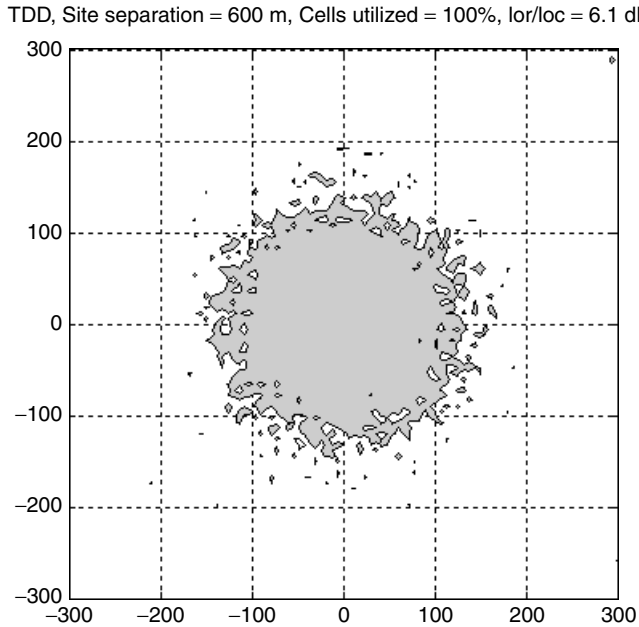

Figure 8.2 Example Coverage at 12.2 kbps

cell) in which the cell of interest is located in the center. The cell radii are set to 300 m, which is equivalent to the site separation distance of 600 meters. Figures 8.1 and 8.2 depict the cell layout and resulting coverage map.

8.2.2.2.2 Static Simulator Approach

An empirical approach to estimating capacity is to use a Static Simulator. Instead of attempting to accurately model the time sequence of events occurring in a wireless mobile system, a static simulator models and captures the stochastic nature of events by creating a multitude of uncorrelated instantaneous pictures (often referred to as 'snapshots') of the system. By simulating different users in different positions and propagation conditions,

each snapshot depicts a unique realization of the state of the system in regards to received signal, perceived interference, outage, etc. The results are then averaged to provide useful statistics. This allows the static simulator to estimate the performance of the system over a very large number of realizations without having to systematically simulate the whole chain of events that would have led to them.

The static simulator used for TDD analysis is more complex than its other counterparts. As TDD slot allocation depends on the interference in the slots, slot allocation can only be performed one user at a time, allowing the interference to be estimated between user allocations. Thus the TDD static simulator is designed to conserve the causality of events.

8.2.3 TDD Capacity: Over-the-Rooftop Deployment

The results below have been obtained using the static simulator approach.

8.2.3.1 Assumptions

Figure 8.3 shows the cell layout, including the location of the base stations, which was used to obtain a set of simulation results. In the simulations, 12 cells are used, with 600 m distance between base stations. The maximum BS and UE transmit powers are assumed to be 33 and 22 dBm respectively. The BLER (Block Error Rate) target is assumed to be 1% for speech and 10% for data (64, 144 or 384 kbps). The maximum number of resource units per timeslot was assumed to be 16 for uplink and 14 for downlink. The capacity of the whole of the 12-cell network is analyzed.

Figure 8.4 shows the 'traffic capacity' of the above system, in terms of the number of traffic channels of varying data rates that can be supported in the uplink and downlink. Eight timeslots were allocated for downlink and 4 timeslots were allocated for uplink.

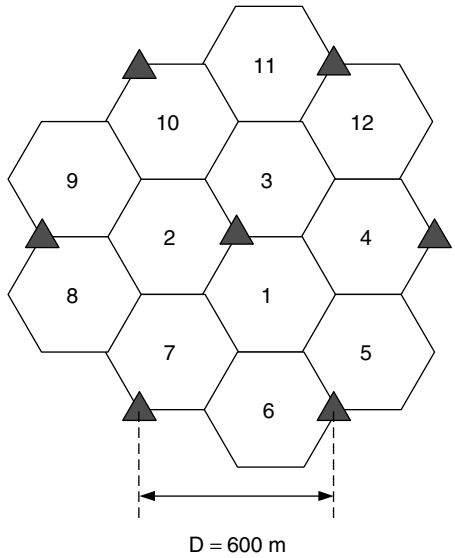

Figure 8.3 Example of Cell Layout

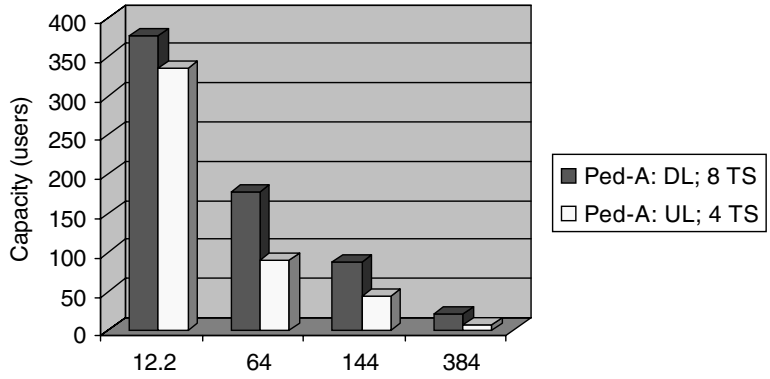

Figure 8.4 Example Capacity Numbers for Various Services

The total number of traffic channels that can be supported is determined for 12.2, 64, 144 and 384 kbps in uplink and downlink separately. A pedestrian channel is assumed with a user speed of 3 km/hr.

Based on the above results, we now estimate the cell capacity in terms of number of voice and data users, with various combinations of simultaneous uplink and downlink traffic.

8.2.3.1.1 Voice Capacity

It follows from the data shown in Figure 8.4 that approximately 330 voice users are served by a 5 MHz TDD carrier, with 8 timeslots being used for downlink and 4 timeslots for uplink. It is interesting to note that even though voice traffic is symmetric in the uplink and downlink directions, the number of timeslots needed is not equal in the two directions due to the higher UL capacity. This is because BS receivers have, in general, better performance compared to UE receivers. For example, the noise figure of BS receivers can be 4 dB better, leading to higher capacity in the uplink direction per timeslot. Furthermore, Base Stations typically have receive antenna diversity, which offers significant capacity benefits.

The unequal allocation of timeslots for a symmetric traffic class (e.g. voice) underscores the importance of the flexibility that the WTDD air interface offers in service implementation. The ability to dynamically allocate UL and DL timeslots allows TDD to more efficiently support a wide variety of voice and data services. In a symmetric air interface, such as FDD, one is forced to use an equal number of radio resources in the uplink and downlink directions. This results in unused (and hence wasted) resources on the uplink.

8.2.3.1.2 Data Capacity

Data traffic is typically asymmetric, whether the applications are Internet Browsing, Music/Video Streaming or Image Uploads. Given TDD's ability to allocate its radio resources according to the traffic demands, it is illustrative to analyze TDD's capacity as a function of traffic asymmetry. Table 8.1 shows the system capacity in the simulated 12-cell system for different traffic asymmetries. The system is deployed over-the-rooftop, and assumes Pedestrian A – 3 km/h multipath channel profile.

Table 8.1 TDD Capacity vs Traffic Asymmetry

Traffic asymmetry	Timeslot allocation	Capacity
64 kbps DL/12.2 kbps UL	9/3	200
144 kbps DL/12.2 kbps UL	10/2	115
144 kbps DL/64 kbps UL	8/4	89
384 kbps DL/64 kbps UL	10/2	31

Table 8.2 Robustness of Capacity Relative to Cell Size

Site-to-Site Distance (m)	DL/UL Rates: 144/64 kbps DL/UL Timeslots: 8/4	DL/UL Rates: 384/64 kbps DL/UL Timeslots: 10/2
600	89	31
1200	87	31
1800	76	28

Table 8.3 Robustness of Capacity Relative to Indoor/Outdoor Users

Indoor Users (%)	DL/UL Rates: 144/64 kbps DL/UL Timeslots: 8/4	DL/UL Rates: 384/64 kbps DL/UL Timeslots: 10/2
0	89	31
80	85	31

8.2.3.1.3 Sensitivity to Cell Separation

The above results were based on a 600-meter Cell Separation. Simulations reveal that capacity numbers are quite insensitive to increasing the cell separation to 1200 meters, while suffering only a small decrease till about 1800 meters. Table 8.2 shows the 5% outage capacity figures for a 12-cell system, using 39 dBm BS and 27 dBm mobiles.

8.2.3.1.4 Sensitivity to Indoor vs Outdoor Users

The above results assumed that all the users were outdoor users. If some of the users were indoors, they would experience higher pathloss. It was determined by simulations that the capacity figures do not change significantly even if 30% of all the users were indoors. Table 8.3 shows the 5% outage capacity figures for a 12-cell system, using 39 dBm BS and 27 dBm mobiles.

8.3 COEXISTENCE

All cellular wireless systems can suffer from interference between base stations and handsets in adjacent bands and TDD is no exception. In addition to the above, TDD operation can give rise to two more interference mechanisms, between base station to base station (BS-BS) and between mobile and mobile (MS-MS). Depending on the frequency

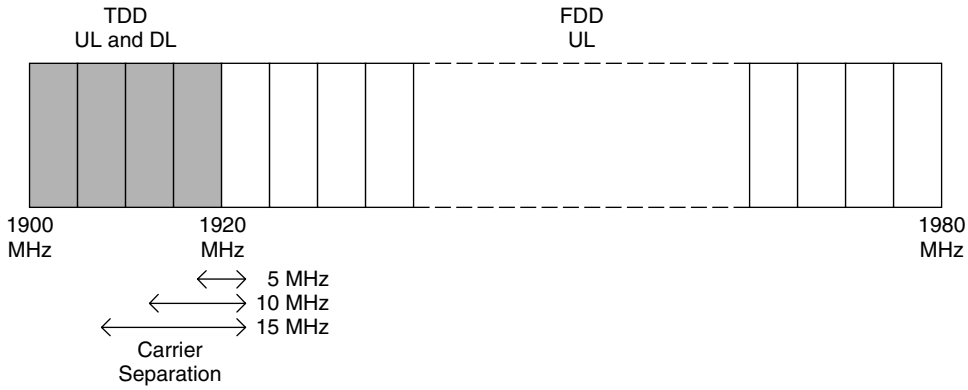

Figure 8.5 TDD and FDD UL Carriers

arrangements, these may occur between two or more TDD systems or between TDD and FDD systems.

Recall that current frequency arrangement in Europe and elsewhere is for the TDD (Uplink and Downlink) and FDD Uplink to operate in adjacent bands, namely 1900–1920 MHz and 1920–1980 MHz respectively. This frequency arrangement is depicted in Figure 8.5. As such, the signals transmitted by the TDD Transmitters could leak into the FDD receiver and vice-versa. The amount of leakage depends, among other factors to be discussed later in this section, on the frequency separation of the TDD and FDD carriers. Clearly, the smallest separation is approximately 5 MHz, between the highest frequency TDD carrier and the lowest frequency FDD carrier.

The four interference mechanisms between TDD and FDD are depicted in the figure below (Figure 8.6).

Similarly, TDD systems using different carriers can also interfere with each other. Figure 8.7 shows the situation where a TDD BS and TDD UE cause interference to other TDD BS and TDD UE respectively.

Of all the interference scenarios described, the scenarios where the interference between a UE and a BS operating in adjacent bands do not cause significant concerns are interesting for a number of reasons. First, the Coupling Loss between the UE and the BS is high (approximately 70 dB). Second, the interference is of a stochastic nature, due to the mobility of the UE. This interference mechanism is after all no different from the near–far interference that is common to all cellular systems and is dealt with in the same manner. As such, we will only concentrate on the BS → BS and UE → UE interference scenarios.

8.3.1 BS to BS Interference

The amount of interference experienced by a victim Base Station depends upon the amount of Signal Leakage from the attacking or interfering Transmitter (Adjacent Channel Leakage), the amount of signal loss between the two base stations (coupling loss) and the ability of the receiver to suppress the out of band interference (Adjacent Channel Selectivity). Figure 8.8 defines relevant quantities.

The adjacent channel leakage is measured in terms of Adjacent Channel Leakage Ratio (ACLR), which is defined as the ratio of the desired signal power in its channel to the

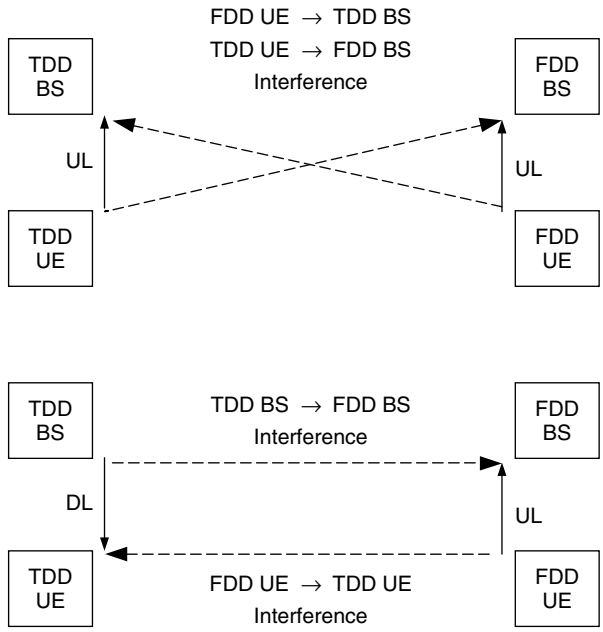

Figure 8.6 TDD–FDD Interference Scenarios

power measured in an adjacent channel. Both the transmitted and the adjacent channel power are measured through a matched filter (raised root cosine with a roll-off 0.22) with a noise power bandwidth equal to the chip rate.

A related quantity, the Adjacent Channel Leakage Power (ACLP), is defined as the absolute amount of power in the adjacent band. That is:

$$\text{ACLP (dBm)} = \text{Tx Power (dBm)} - \text{ACLR (dB)}$$

Similarly, the Adjacent Channel Selectivity (ACS) of the receiver is a measure of the ability of a receiver to filter and reject the signal from adjacent channels. Formally, ACS is defined as the ratio of the receive filter attenuation on the desired channel frequency to the receive filter attenuation on the adjacent channel(s) as is illustrated in Figure 8.8. It is, however, often specified in terms of the maximum interfering signal that can be present when a desired signal of certain level and data rate is received without degradation.

Other quantities that are related to ACLR are the ACLR2 and spurious emissions which define the emissions in 10 MHz or more of separation and the blocker requirements which measure a value equivalent to ACS for the receiver in 10 MHz or more of separation.

8.3.1.1 Coupling Loss and Minimum Coupling Loss

Coupling loss is simply the amount of signal attenuation as measured between the transmitter and receiver and is the sum of the path attenuation and any antenna gain or loss and cabling losses.

Base stations that interfere with each other may be deployed in the same site or in different sites in the same area, see Figure 8.9 and Figure 8.10.

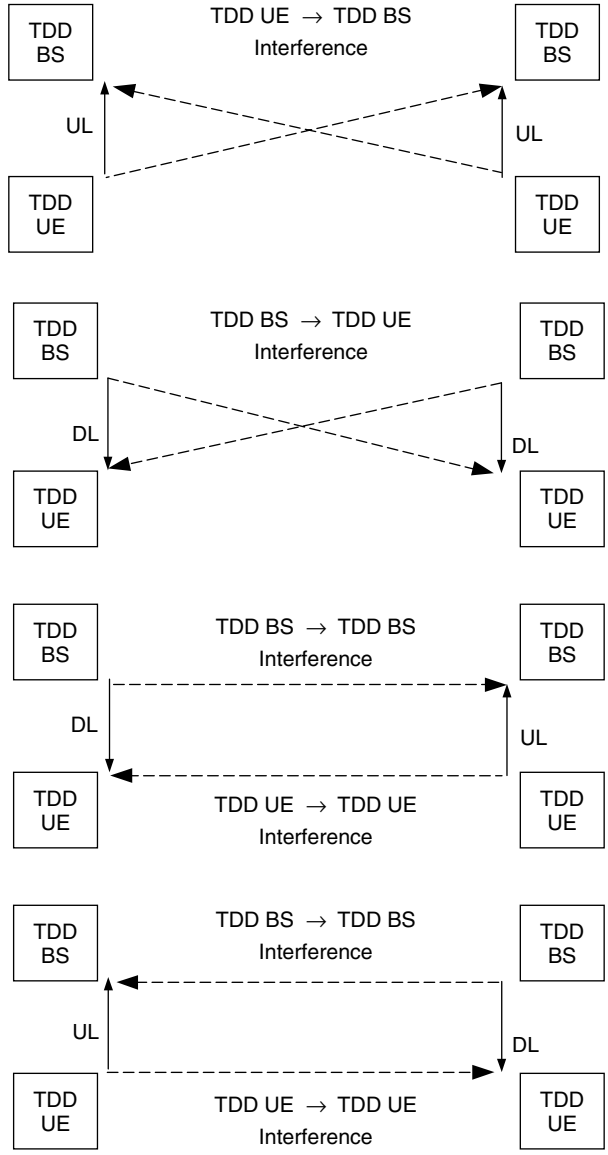

Figure 8.7 Interference Scenarios between TDD Systems in Adjacent Bands

Minimum coupling loss is, on the other hand, an agreed number that represents the lowest reasonable propagation losses between any two transceivers. MCL is related to the type of deployment.

Within the 3GPP standards, there are two basic deployment categories: (1) co-sited and (2) same geographic area.

Irrespective of the physical layout implied by the terms, the actual distinction between the two categories is the minimum coupling loss (MCL) between base stations. Co-sited is

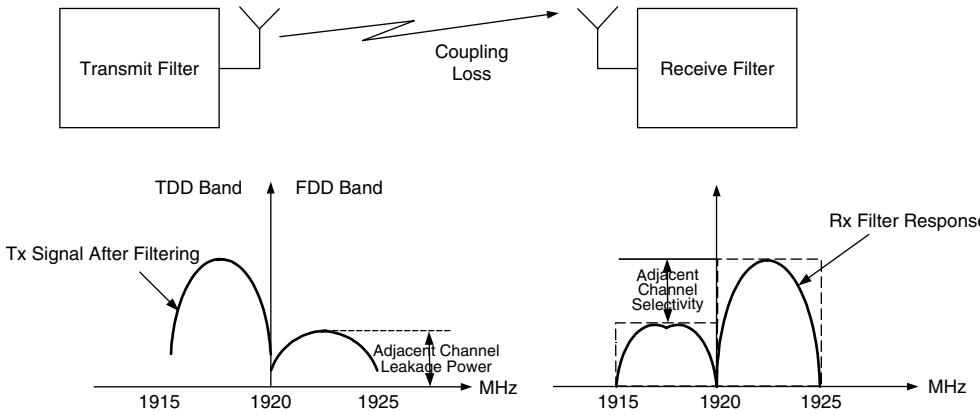

Figure 8.8 Three Factors Affecting Interference

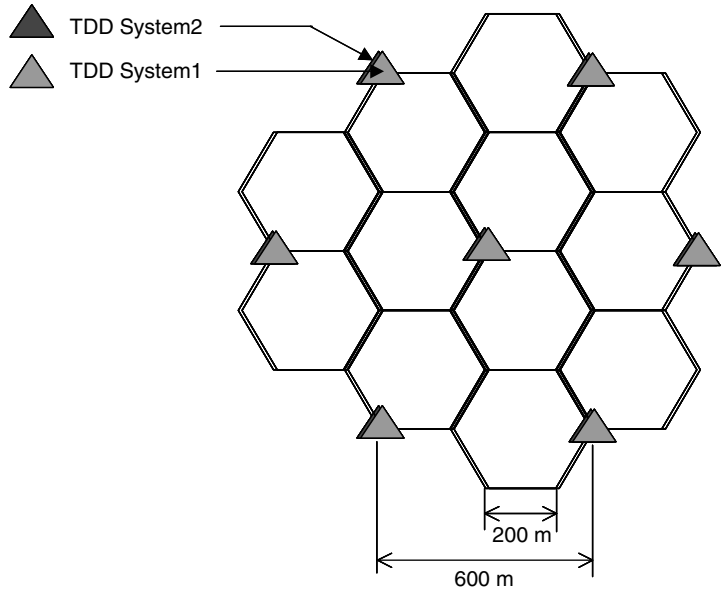

Figure 8.9 Same-Site TDD Networks

meant to imply an MCL of 30 dB. This MCL may occur for example when two operators share the same rooftop and do not take any special measures to reduce BS-BS interference, i.e. each operator deploys and operates the equipment as though the other operator does not exist. It must be noted that well-established site-engineering techniques, e.g. vertical separation of antennas on the same pole, can be applied to co-sited deployments to significantly increase MCL. In fact, it is possible through site engineering to increase co-sited MCL to the level of same area MCL. This can be thought of as cooperative co-siting. Same area deployment is defined, in the context of TDD-FDD coexistence, as an MCL of 74 dB. This may happen with two base stations that are in proximity to one

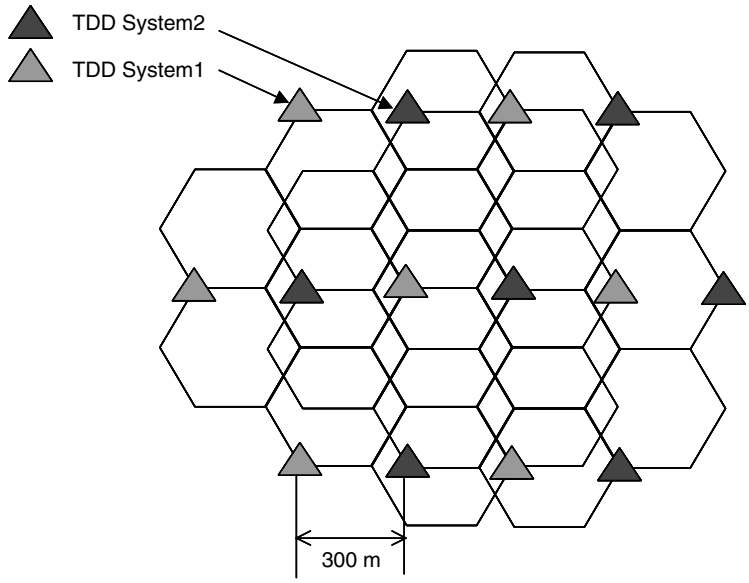

Figure 8.10 Same-Area TDD Networks

another but not co-sited (for example, on adjacent roofs) or co-sited in conjunction with site engineering techniques.

8.3.1.2 ACLP and ACLR

The 3GPP requirements for the level of adjacent channel signal power for TDD and FDD receivers are shown in Table 8.4 for same area and co-sited deployments.

If the TDD BS is transmitting 34 dBm power, then ACLR is given by (34 – ACLP), see Table 8.5.

These ACLR requirements can be met by a combination of six or eight section cavity filters in conjunction with a 'linearized' power amplifier at the TDD transmitter.

Table 8.4 TDD and FDD Adjacent Channel Leakage Power Requirements

Scenario	Same Area	Non-cooperative Co-sited
TDD → FDD	−36 dBm	−80 dBm
TDD → TDD	−29 dBm	−73 dBm

Table 8.5 TDD Transmitter ACLR Requirements

Technology	Same Area	Non-cooperative Co-sited
TDD → FDD	70 dB	114 dB
TDD → TDD	63 dB	107 dB

Table 8.6 FDD and TDD BS ACS

Carrier separation MHz	FDD/TDD BS ACS dB
5	46
10	58
15	66

8.3.1.3 ACS

The values of ACS requirements for TDD and FDD are listed in Table 8.6. (These were indirectly derived by the ITU from 3GPP TS 25.104 and 3GPP TS 25.105.)

8.3.1.4 Overall Interference

The overall interference experienced by a victim BS receiver consists of two components. The first is the amount of signal that has leaked into the passband of the BS receive filter from the adjacent transmitter. Expressed in dB, this is given by (Tx Power of the Adjacent Transmitter – MCL – ACLR of the Transmitter). The second is the amount of adjacent transmitter signal that has leaked through the stopband of the receiver filter. Expressed in dB, this is given by (Tx Power of the Adjacent Transmitter – MCL – ACS). Thus the overall interference experienced by the victim BS is a combination of the ACLR and ACS according to the equation below:

$$\frac{1}{ACIR} = \frac{1}{ACLR} + \frac{1}{ACS} \quad \text{All quantities expressed as natural numbers (not dB)}$$

8.3.1.5 Effects of Interference

The interference from an aggressing network on the base station is usually called external interference, to distinguish it from internal interference (sum of inter-cell and intra-cell interference) and thermal noise. The maximum range of the network is dependent on the total interference (external and internal) as is limited by the maximum MS power. An increased external interference would imply either the reduction of range or reduction of capacity.

For low user density deployment, maximum range must be reached. For this type of deployment very little noise rise (typically 1 dB) is tolerated. As the user density increases, the range is reduced while the capacity is constant, thus higher noise rise can be tolerated, up to 18 dB for pico deployment.

These numbers are relaxed (by 7 dB) for TDD to account for the slotted nature of TDD, i.e. a TDD BS will not transmit in each timeslot.

Thus, as long as the interference caused by noise rise is below the allowance, the degradation in the victim's system performance is considered negligible and acceptable. The interference may also be specified in terms of maximum power at the receiver terminals, instead of a noise rise at the Base Station.

8.3.1.6 TDD Timeslots and Interference

It must be observed that the TDD BS interference problems occur only when one BS is receiving (uplink) while another is transmitting (downlink) in the same timeslot. Figure 8.11 shows the interfering and non-interfering timeslots.

8.3.1.7 Coexistence Analysis

Tables 8.7 and 8.8 shows details of the coexistence analysis for Co-sited and Same-Area Deployments, in terms of ACIR and MCL. The last column gives the overall interference experienced by the victim FDD BS receiver. As mentioned earlier, it equals (BS Power − ACIR − MCL).

BS-to-BS interference between two TDD networks is complex and highly implementation dependent. This is due to the inherent slotted nature of TDD, which results in some timeslots causing interference while others will not degrade system capacity or outage. Factors affecting the level of performance degradation include: BS proximity, number of conflicting timeslots, carrier frequency separation, transmit filter characteristics, receive filter characteristics, BS antenna gain, down-tilt angle, etc.

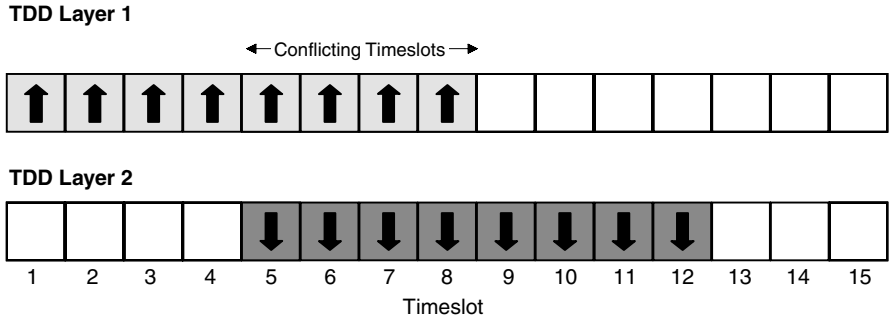

Figure 8.11 Timeslot Allocation

Table 8.7 TDD → FDD Co-sited Coexistence Scenarios

Scenario Description	BS Power (dBm)	ACLP (dBm)	Required ACIR (dB)	MCL (dB)	FDD Rx Interference (dBm)
TDD macro to FDD macro, rural	32.2	−80	112.2	30	−110
TDD macro to FDD macro, urban	32.2	−67.5	99.7	30	−97.5
TDD macro to FDD micro	32.2	−63.5	95.7	30	−93.5
TDD micro to FDD macro, urban	25.2	−67.5	92.7	30	−97.5
TDD micro to FDD micro	25.2	−63.5	88.7	30	−93.5

Table 8.8 TDD → FDD Same Area Coexistence Scenarios

Scenario Description	BS Power (dBm)	ACLP (dBm)	Required ACIR (dB)	MCL (dB)	FDD Rx Interference (dBm)
TDD macro to FDD macro, rural	32.2	−36	68.2	74	−110
TDD macro to FDD macro, urban	32.2	−23.5	55.7	74	−97.5
TDD macro to FDD micro	32.2	−19.5	51.7	74	−93.5
TDD micro to FDD macro, urban	25.2	−23.5	48.7	74	−97.5
TDD micro to FDD micro	25.2	−19.5	44.7	74	−93.5

8.3.2 UE to UE Interference

Due to the stochastic nature of the problem, an accurate assessment of the potential interference between mobiles cannot be undertaken using a deterministic approach (see Figure 8.12). Rather, it is necessary to employ Monte Carlo simulation techniques to obtain the probability of occurrence of events of interests. A system simulation tool was used to investigate FDD mobiles to TDD mobiles interference.

8.3.2.1 Deployment Scenario

The scenario is depicted in Figure 8.13. A group of four TDD pico cells are deployed inside a building of dimensions 110 m × 110 m (Figure 8.14). This building is situated at a distance of 740 m from the macro FDD base station. The macro FDD base station is tri-sectored and the radius of each cell (sector) is 500 m. It is further assumed that 20% of the FDD users in the sector serving the building are operating inside the building.

Note that in this scenario, the TDD system is exposed to enhanced interference from the FDD mobiles. First, the FDD mobiles located inside the building will transmit at a high power level compared to the general FDD mobile population. This is because the indoor mobiles have to overcome the penetration loss of the building and also because the building is located near the edge of the FDD cell. Furthermore, the density of FDD mobiles in the building is much higher than if they were uniformly distributed throughout the cell (13 times denser).

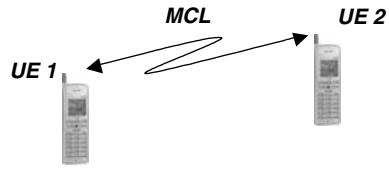

Figure 8.12 Basic UE–UE Interference

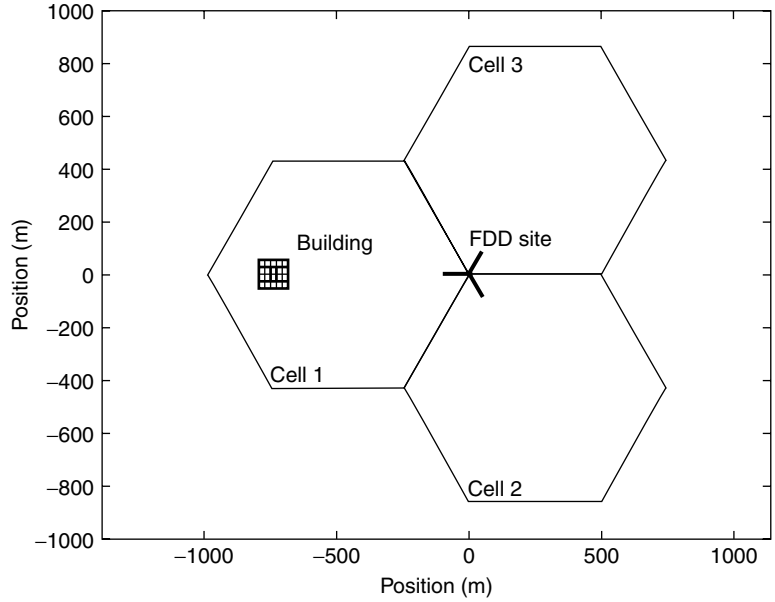

Figure 8.13 Deployment Scenario Used for the Simulations

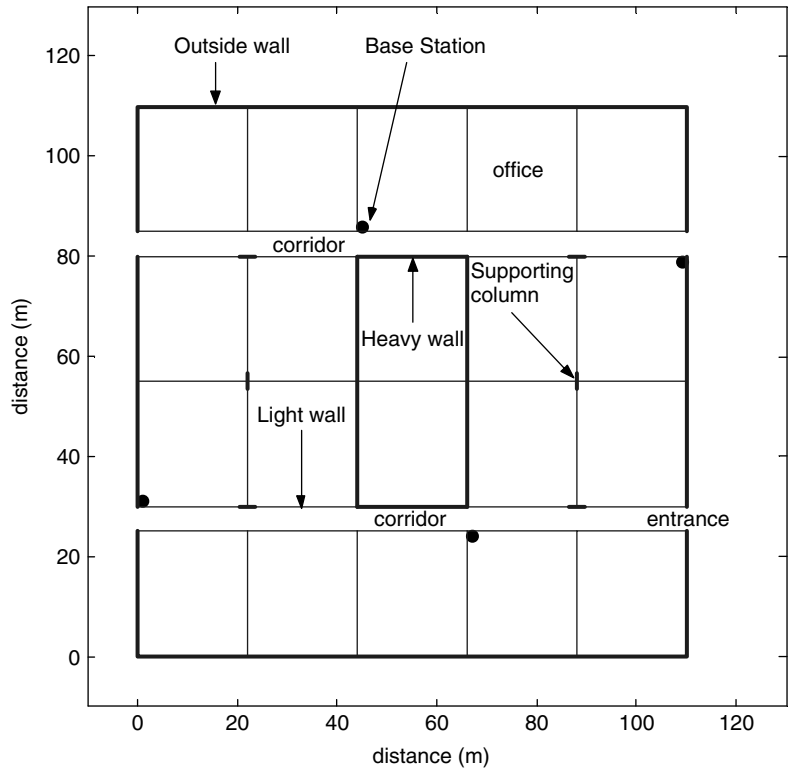

Figure 8.14 Detail of the Building Containing the TDD Pico-Cells

Table 8.9 System Characteristics of the TDD Pico System

BS antenna gain	4 dBi (omni directional)
BS maximum Tx power	22 dBm
MS antenna gain	0 dBi
MS ACS	33 dB
User bit rate	12.2 kbps (2 codes of spreading factor 16)
Required C/I per code	−4.3 dB
Dynamic channel allocation (slot-to-cell)	8 downlink slots
Dynamic channel allocation (user-to-slot)	User's codes preferably assigned to slot(s) with least interference

Table 8.10 System Characteristics of the FDD Macro System

BS antenna gain	17 dBi (Standard tri-sectored antenna)
MS antenna gain	0 dBi
MS maximum Tx power	22 dBm
MS ACLR	33 dB
Bit rate	12.2 kbps
Required C/I	−17.4 dB

Some of the salient system characteristics of the TDD and FDD systems are shown in Table 8.9 and Table 8.10, respectively. No soft or softer handover was modeled for the FDD system.

8.3.2.2 Simulation Results

The results of the simulations are now described. The load of the TDD system is set to 72 users (in 4 cells) when power control is OFF and 160 users when power control is ON. The load of the FDD system is set to 110 users (in three sectors).

- General Outage Impacts: The overall impact of the FDD users on the TDD system is weak. Simulations have shown that even when the TDD system does not use power control, the TDD system outage probability increases only by 0.2%. When the power control is enabled, the impact of the FDD users was not even measurable within the simulations.
- Results as a Function of UE–UE Separation Distance: Despite the weak impact on the global performance of the system, it is still possible that individual TDD mobiles in the neighborhood of an FDD mobile could be severely affected when the latter is transmitting from inside the building. This could be detrimental to the TDD user experience as FDD users moving around or starting calls may cause frequent dropped calls.

In order to assess if this is a problem, statistics of the probability of outage as a function of the distance to the closest active indoor FDD mobile have been collected for cases where FDD mobiles were interfering with the TDD mobiles. The result is shown in Figure 8.15.

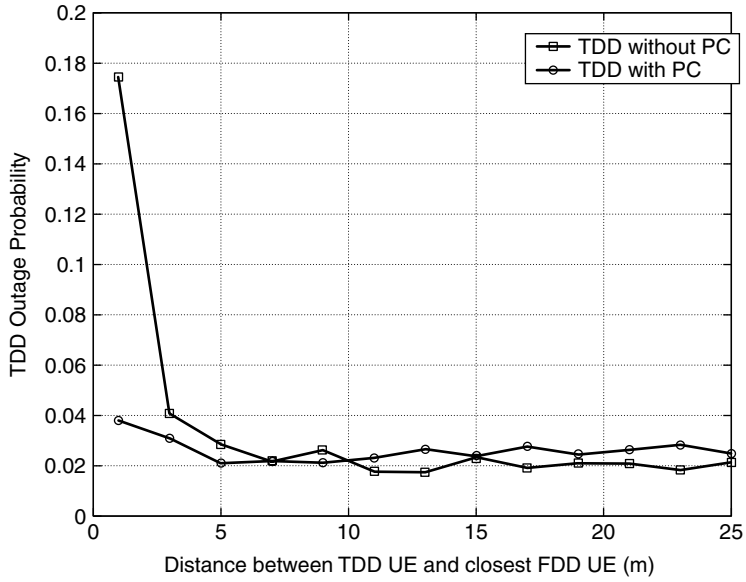

Figure 8.15 TDD Outage Probability as a Function of Distance

Figure 8.15 shows that when power control is not used in the TDD system, the outage probability of TDD mobiles becomes significantly larger for distances of 2 meters or less (although the likelihood of failure is still below 20%). When power control is activated, the phenomenon almost disappears. The outage probability becomes practically independent of the distance from an active FDD mobile.

8.3.2.3 Conclusion

The robustness of the TDD system to MS-MS interference is not surprising and stems from the unique features of TDD.

CDMA systems are generally interference-limited. As new users are added (while at the same time pathloss changes), the power control functions guarantee that, as long as BS power suffices, each user is allocated just enough power to fulfill their C/I requirements. Where traffic is too heavy, BS power does not suffice, at which point interference degrades the C/I ratio beyond the threshold of the receiver detection capability.

While both FDD and TDD share this general principle, TDD differs from FDD in two important areas that have an impact on how radio resource management (RRM) in the network best handles each radio access mode to maximize capacity and coverage: these are Multi-User Detection (MUD) and Dynamic Channel Allocation (DCA). As explained in Section 8.2.1, MUD provides significant C/I performance improvements through cancellation of interference from other UEs within a given cell.

The result of the MUD is that in those cases where FDD MS interferes with a TDD MS, thus causing an increase in the required DL power for that user, that increase will have no effect on other users in the cell (as long as BS power suffices). This is markedly different from a system without intra-cell interference cancellation (such as a standard

FDD system) where an increase in the power required by one of the users will create an increase in the power required for all, causing a runaway effect. The effect on the interference level to users in other cells is the same as in the FDD system and is of lower magnitude. Therefore, the effect of MS-MS interference is reduced as a result of the MUD.

Due to the time-slotted nature of TDD a unique RRM feature in UTRA TDD is the fast dynamic channel allocation (FDCA), which is a part of the radio resource management (RRM) package. FDCA is used for assignment and reassignment of channels. When invoked, FDCA retrieves relevant UE and Node B measurements in order to compute a figure of merit which ranks available timeslot/code resources as a function of the anticipated rise in inter-cell interference in the system, taking into account the impact on the users already present in the system. FDCA is optional in the network and is supported by standard measurements and signaling procedures.

The result of the FDCA is that mobiles that require high power tend to be isolated in different slots, usually shared with users who require only a small fraction of BS power. The net result is that cell edge users or the few users that suffer from FDD interference can typically receive most of the BS power. Thus, the effect of FDD interference on inter-cell interference is reduced by the FDCA. Note that this improvement cannot be easily shown by simple analytic methods (e.g. pole equations) and typically requires a simulation effort as shown in this section.

To summarize, MUD reduces the effect of FDD interference on the intra-cell interference, while the FDCA reduces the effect of FDD interference on inter-cell interference. Combined, those two system aspects that are unique to UMTS TDD effectively combat the FDD MS to TDD MS interference.

REFERENCES

[1] UMTS Forum, Report #28. “Relative Assessment of UMTS TDD and WLAN Technologies”, march 2003.
[2] ETSI, Universal Mobile Telecommunications System (UMTS) ‘Selection Procedures for the Choice of Radio Transmission Technologies of the UMTS’, UMTS 30.03 version 3.2.0, TR 101 112 V3.2.0 (1998-04).

9

Alternate Technologies

In this chapter, we shall compare WTDD with WLAN and TD-SCDMA technologies.

9.1 WTDD-WLAN COMPARISON

In this section, a comparison of the two technologies is first provided followed by considerations for deployment. The material is drawn from the author's contribution to a UMTS Forum Report [1].

At the very outset, it must be realized that WLAN technologies were originally developed for wireless data communications, which are typically dominated by non-real-time services. However, WLAN technologies are evolving to meet the needs of the impending convergence of data communications and telecommunications. In contrast, TDD technology was developed as a 3rd generation technology in anticipation of the converged data and telecommunications, making it ready for wireless voice, data and multimedia communications.

The technical comparison of WLAN and TDD technologies presented here addresses the following aspects: System and Service Attributes and System Performance. System and Service Attributes include Spectrum issues, Susceptibility to Interference, Mobility, Scalability, Support for Voice and Data Services, Security and Quality of Service. System performance includes Radio Link characteristics, Data link rates and User throughputs, Cell Coverage as a function of number of users and range, Cell planning and System Capacity. As a result of such a comparison, we will be able to elucidate a number of considerations needed for WLAN and TDD deployments.

9.1.1 System and Service Attributes of WLANs

There are a number of candidate technologies for WLANs. Dominant are the IEEE Standards 802.11, 802.11b and 802.11a. While 802.11 is mostly of historical interest, 802.11b is being deployed currently and 802.11a could be the next evolutionary step. Another development is 802.11 g, which is also an evolutionary step from 802.11b while maintaining some level of backward compatibility. HiperLAN is another standard that has been developed for what was conceived to be the next generation wireless LAN, but does not appear to be used frequently in the industry.

Wideband TDD: WCDMA for the Unpaired Spectrum P.R. Chitrapu
© 2004 John Wiley & Sons, Ltd ISBN: 0-470-86104-5

802.11b WLAN systems offer essentially a wireless scheme for the transport of IP-packets based on collision-based multiple access and operate in the unlicensed ISM frequency band in the US (other countries use slightly varying spectrum allocations for this purpose). The spectrum allows for 11 radio channels, although only 3 radio channels do not overlap with each other with channel spacing of 25 MHz. This has an impact on WLAN deployment over a large geographical area with channel reuse. Each radio channel occupies approximately 22 MHz bandwidth and supports 'instantaneous' link data rates of 1, 2, 5.5 and 11 Mbps, with the actual rate being determined essentially by the signal to noise ratio. 802.11b does not support power control, so that the instantaneous link data rates are directly dependent on range between the Access Point and the User Equipment. (Access Points play a role similar to Node B/BTS in UMTS/GSM systems.) The radio channels are shared by multiple users in a collision-based multiple access scheme known as CSMA/CA. Within this MAC scheme, there are essentially three variants, simple DCF, DCF with RTS/CTS and PCF. Of these, DCF is the most used protocol and it allows all users equal opportunity to send and receive data. DCF with RTS/CTS allows users to randomly access the radio channel to reserve the channel for a period of time. PCF allows for coordinated allocation of resources to various users. In practice, simple DCF is the most deployed. The air interface is very simple, with rudimentary QoS controls and with rather simple radio link encryption capabilities. User Authentication is typically handled outside the 802.11b standard and by layers above the IP-layer. The radio interface is not optimized for high speed mobile User Equipment, so that the 802.11b technology is typically characterized as being best suited for nomadic wireless User Equipment, such as laptop PCs. Accordingly, the power consumption, especially during periods of inactivity, was not minimized through either protocol design or through chip and system designs. The 802.11b standards focused mostly on the radio interface so that communications between Access Points is not sufficiently well developed. This makes mobility (location) management and handover of User communication between Access Points vendor-dependent and makes multi-vendor inter-operation difficult. Finally, we mention in passing that 802.11b standards allow direct peer-to-peer communication without the involvement of the Access Points.

As 802.11b-based WLAN systems are being deployed at an increasing rate in the public (in contrast to private – enterprise and home) environments, the standards are evolving to address the several shortcomings alluded to above. For example, 802.11i is improving the encryption capabilities, whereas 802.11e is seeking to improve QoS controls. Similarly, 802.11f is developing protocols for Inter-Access Point communication that will facilitate standardized methods for handovers.

Partly to overcome the limitations of crowding of the 2.4 GHz ISM spectrum where 802.11b operates, and partly to increase the data rates, the 802.11a standard was developed in the license-exempt 5 GHz band. This spectrum supports up to 12 non-overlapping channels, with each channel still occupying 20 MHz bandwidth. However, using a different modulation technique, the instantaneous data rates increased to 6, 9, 12, 18, 24, 36, 48 and 54 Mbps. However, the MAC layer essentially stayed the same, leaving the remaining attributes of the 802.11a-based systems essentially equivalent to those of 802.11b-based systems. Presently, chipsets as well as devices are being introduced on the market and their deployment success is yet to be seen. 802.11 g is an evolution of the 802.11b standard in the same frequency band (ISM in the US), while increasing the data rates up to 54 Mbps.

Industry products based on this standard are in their infancy and it remains to be seen how they will develop in future, considering the spectrum crowding and competitive positioning of 802.11a systems.

Finally, a critical attribute of the WLAN systems is that they are essentially designed to be stand-alone local area networks. As such, the connection of WLAN 'islands' to a backend network is not standardized. Typically, the backend network provides user application services (such as Internet access) as well as subscriber management (consisting of user authentication, billing and customer care). A current development is to solve this problem by providing and standardizing interfaces to 3G Core Networks. This WLAN-3G Interconnection/Interworking is presently a hot topic of standardization in 3GPP/SA and a topic of roaming and security issues in GSMA. The work so far has identified a number of levels of interworking, ranging from loose interworking to tight interworking. The loose interworking begins at simply providing common billing and moves to common access control (i.e. common authentication) and finally addresses seamless operation (including handovers) between WLAN and 3G networks. The current focus is on common billing and common access control.

9.1.2 Comparison of TDD and WLAN System and Service Attributes

In this section, TDD systems are compared with mostly WLAN systems based on 802.11b technology. However, since 802.11a and 802.11 g systems use the same MAC layer and differ only in the PHY layer, most of our comparisons will also hold for WLANs based on these technologies. We shall follow the same order as was used in enumerating the system and service attributes in Section 9.1. Unless explicitly stated, WLAN denotes 802.11b-based WLAN in this section.

First, while WLANs provide for wireless transport of IP-packets, TDD systems provide for wireless transport of IP-packets as well as real-time data generated by sources such as AMR Voice-Coders. In other words, TDD provides both Circuit-Switched and Packet-Switched services, whereas WLANs provide only Packet-Switched services. Thus, TDD systems are readily capable of supporting real-time, conversational services, including Voice as well as Multimedia services.

WLANs enable multiple users to access the radio interface using a simple collision-based algorithm known as CSMA/CA, whereas TDD systems use highly sophisticated MAC algorithms. The TDD MAC algorithms provide radio resources to various users in a manner optimized for their services. Thus, it follows that inefficiencies due to the MAC algorithm are less in TDD compared to WLAN systems.

WLANs use free unlicensed frequencies, whereas TDD systems may use licensed and unlicensed frequencies. While this is attractive for private deployment of WLANs, public commercial deployment of WLANs in the unlicensed frequencies is presently under the scrutiny of regulators in various countries. On the other hand, the fact that WLANs use unlicensed frequencies implies that these systems are highly vulnerable to interference from other devices operating in the same frequencies, and furthermore the interference is unpredictable and uncontrolled. Such interference could arise from Bluetooth devices, advanced cordless phones, microwave devices, and possibly from other WLAN networks.

Licensed TDD systems are free from such uncontrolled and unpredictable interference from other devices operating in the same frequency band. The sources of interference in

TDD systems are well understood and some of them can actually be taken into account in advanced receivers. An example is a Multi-User detector, which detects the signals of all interfering users in a given cell and cancels them out.

Whereas 802.11b-based WLANs have only three non-overlapping radio channels, TDD systems have many more radio channels, providing greater degrees of freedom in multi-cell system design. TDD has more radio channels because they are defined in terms of Scrambling Codes.

The maximum instantaneous link data rate supported by WLAN is 11 Mbps in 25 MHz (0.44 Mbps per MHz) in either direction (uplink or downlink). User applications do not experience this instantaneous data rate, but only a throughput, which is smaller due to signaling overheads, idle times, etc. It will be shown later in Section 9.1.3 that the theoretical maximum throughput is about 7 Mbps in 25 MHz (0.28 Mbps per MHz). In comparison, the maximum instantaneous data rate for TDD, calculated in the same way based on chip rates, would be 3.8 Mbps in 5 MHz bandwidth (0.77 Mbps per MHz). TDD can sustain a maximum downlink user throughput data rate of 2 Mbps in 5 MHz (0.4 Mbps per MHz).

In WLANs at 2.4 GHz, there is no power control mechanism, so that the data rates depend directly on range. As such, the data rates typically step down from 11 Mbps to 1 Mbps as the range is increased. This produces a non-uniform user experience within a cell. In contrast, TDD has sophisticated power control mechanisms, so that the instantaneous data rates could be supported with reduced dependence on range. This feature enables a user experience that is less dependent on the location of the user relative to the Base Station (Node B/BTS).

Unlike the WLAN air interface, which has only rudimentary QoS controls, TDD allows sophisticated control of QoS. The Quality of Service provided by TDD can be controlled in terms of the delay, priority, mean data rates, etc. This enables enhanced user experience in supporting a variety of real-time circuit-switched services as well as packet-switched services.

The security of TDD systems provides for strong User Authentication, User Confidentiality as well as User Data Privacy (via encryption). The algorithms used are strong and have been time tested. As stated before, User Authentication has to be achieved outside of the WLAN systems and User Confidentiality is not available. The WLAN encryption algorithm (called WEP) uses a 64-bit or 128-bit key and has been shown to be easily broken.

Unlike the WLAN air interface, the TDD air interface is designed to work efficiently in mobile environments as well as nomadic environments. In particular, mobile environments produce large multipath delay spreads as well as Doppler frequency shifts. Most WLAN receivers cannot handle such parameters. Although from a practical point of view, this may not be an issue for laptop PCs, WLANs are being integrated into portable devices such as Wireless PDAs, where this may become an issue.

Power consumption in WLANs has not been minimized either at the protocol level or at the chip and device level, so that their application on the portable device market may face challenges. For example, there is no power control protocol and there is no intelligent management of inactivity periods (idle/sleep/doze mode operations). In contrast, the TDD air interface is optimized for minimal power consumption and ideally suited for portable device application. Specifically, the TDD air interface employs sophisticated power control

as well as idle/sleep mode operations. TDD chips and devices are typically designed for optimal power performance.

It has been pointed out that WLAN standards do not fully specify the functions needed to support mobility (location) management and handovers between Access Points. TDD systems work with the Core Network and support full mobility management as well as handovers of calls and sessions in progress. The mobility (location) management features become extremely important for integrating WLANs into 3G systems as well as for roaming between WLAN networks.

It can now be seen that most of the above comparisons are also applicable to 802.11a-based WLANs. The only places where some relief is obtained are the availability of a larger number of radio channels (12 as compared to 3) and higher data rates per MHz.

Finally, we address the connectivity to the mobile core network. Clearly, TDD was designed to be an integral part of the 3G system, so that TDD systems have all the necessary interfaces and services defined and standardized to the 3G Core Network. These interfaces provide not only user authentication, billing, customer care but also access to all services of the Core Network (such as IMS services). Furthermore, TDD systems enable seamless operation, including handovers, with the wide area access network (e.g. FDD or GSM/GPRS). On the other hand, interconnection and interworking between WLANs and 3G Core Network are only now being addressed by the 3GPP standards body and are likely to take a number of years before this is fully developed.

9.1.3 Performance of 802.11b WLAN Systems

We shall summarize some main performance results of 802.11b-based WLAN systems, when deployed in a typical indoor environment. It is to be noted that the data presented depend upon various assumptions and methodologies, which are described in the references. However, caution must be exercised in translating the data to other scenarios.

We shall address the following aspects: Radio Link characteristics, Data link rates and User throughputs, Cell Coverage as a function of number of users and range, Cell planning and System Capacity. The data is taken from a number of public domain papers as well as some specific studies done by InterDigital Communications Corporation. Results for 802.11a systems as well as for outdoor deployment would be different in numbers but similar in a qualitative sense.

The link performance may be characterized by the Eb/No required for a typical 10% Packet Error Rate for Packet Sizes from 64 Bytes to 1 Kbytes in an indoor environment with channel delay spreads ranging from about 100 to 300 nsecs. Depending upon the specific receiver type, the required Eb/No ranges from about 5 dB to 7 dB for 11 Mbps operation. Other data rates and delay spreads result in appropriate changes to the Eb/No value [2].

The instantaneous data link rates for 802.11b are 1, 2, 5, and 11 Mbps. However, the long-term averaged data rate experienced by the user, termed throughput, is considerably smaller due to the following reasons: Idle times necessitated by the multiple access schemes CSMA/CA and Overhead data bits used as headers, etc. Taking these into account, the maximum possible user data throughput reduces to 7.4 Mbps (67% of the instantaneous data rate of 11 Mbps). Similarly, the throughput rates reduce to 4.4, 1.8 and 0.9 Mbps for 5.5, 2 and 1 Mbps data link rates [2].

The throughput rates discussed above are the best possible rates, experienced by, for example, a single user very close to the Access Point. As the number of users increases, there will be collisions between the data packets from different users, resulting in reduced throughput rates. Similarly, as the channel quality decreases, either due to increased range or increased interference, there will be packets received in error. Such packets will need to be retransmitted, further reducing the throughput rates. Figure 9.1 shows how the aggregate throughput rates decrease as a function of range and as a function of the number of user for an assumed 10% Packet Error Rate. It is clear that the aggregate throughputs fall to less than 3 Mbps at some 60 meters range for 100 users, which results in a rather small 30 Kbps per user! The users are randomly placed over the entire cell and the throughputs are averaged. [3].

Finally, we address the issue of planning a large coverage area with a number of WLAN cells. 802.11b spectrum allows for only three non-overlapping radio channels, resulting in a small 3-cell reuse factor as shown in Figure 9.2. This results in a significant amount of interference from cells using the same frequency radio channel (co-channel interference), which in turn limits the aggregate throughputs. Clearly, the degradation is greatest when the cell radius is small. The corresponding throughput results [3] are shown below.

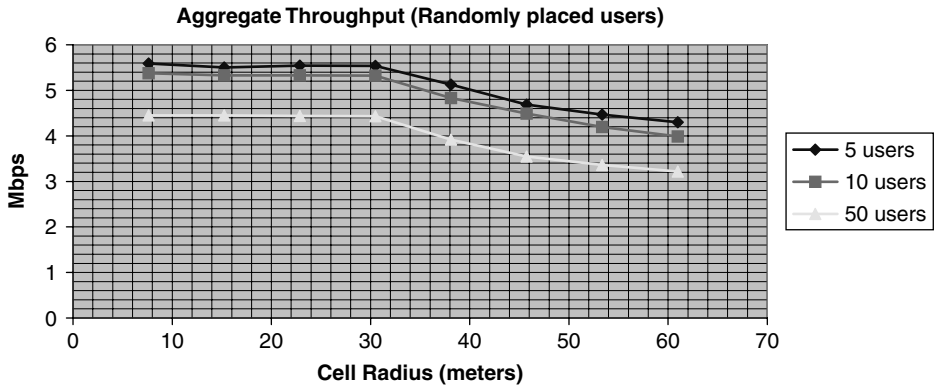

Figure 9.1 Aggregate Throughput of 802.11b-based WLANs

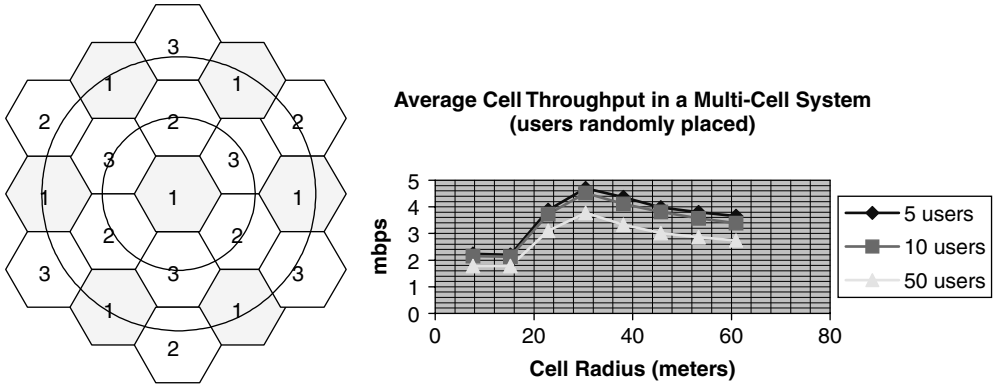

Figure 9.2 Cell Layout and Cell Throughput (Capacity)

The above results are, for example, indoor deployment. In an outdoor scenario, similar results hold good, except that the range is enhanced from some 60 meters to about 200 meters. Furthermore, the above results assume that the MAC algorithm is based on a simple DCF, so that RTS/CTS and PCF are not modeled.

Similarly, although the above results are presented for 802.11b-based WLANs, the qualitative behavior of the results holds good also for 802.11a and 802.11 g. While their higher instantaneous data rates will increase the absolute value of the throughput rates, their degradation as a function of number of users and range will remain similar. One reason for this is that the MAC layer is the same for all these standards. As new MAC algorithms are introduced in 802.11e, some of these trends could change.

9.1.4 Comparison of UMTS TDD and 802.11b WLAN System Performance

In this section, we shall compare the TDD and 802.11b WLANs from the Link, Cell and System performance points of view. Note that the data presented depends upon various assumptions and methodologies, which are described in the references. However, caution must be exercised in translating the data to other scenarios.

The Link Performance is essentially characterized by the required signal quality (Eb/No to achieve a target packet error rate in case of data services and bit error rate in case of voice) and user throughput. Whereas WLAN requires some 5–7 dB for 11 Mbps operation, TDD requires 2–6 dB for low mobility high rate data users [2 and InterDigital Studies].

Comparison of WLAN and TDD data rates is not straightforward because they are characterized differently in each system. For example, in WLANs, we have the instantaneous link rate (11 Mbps for 25 MHz carrier), the maximum throughput rate (reduced to 7.4 Mbps due to packet headers and guard times) and practical throughput rates (reduced to about 6 – 2 Mbps due to data collisions among the various users and range). Note that these rates are 'aggregate' rates, which are shared by all the active users in the WLAN cell [4].

In TDD, one does not generally talk about an instantaneous link rate, but for the sake of comparison, it may be taken as 7.68 Mbps per 5 MHz carrier (3.84 Mcps times 2 bits per each QPSK-modulated-chip). This rate is reduced to user throughput rate by the following factors at the Physical Layer: (1) Spreading factor; (2) FEC (Forward Error Correction) overhead; (3) Synchronization-related overhead (such as midamble bits); (4) Guard times; (5) Common Signaling overhead (timeslots needed for common channels); (6) Dedicated Signaling overhead. There are additional overhead factors at higher layers, such as: (7) RLC and MAC header overhead; and (8) Retransmitted Blocks in case of errors (if Acknowledged mode is used for RLC).

Of these link rate reduction factors, 3, 4, 5, 6 and 7 are somewhat 'static' and are simply needed for multiple access structure and scheme. Taking these factors into account and making other assumptions (such as Burst type 2), the link rate would reduce to about 5.7 Mbps (74% of instantaneous link rate) [InterDigital Studies]. This is already superior to the WLAN multiple access overhead, which brings down the instantaneous link rates to 67% [4].

The remaining rate reduction factors, namely 1, 2 and 8, are dependent on practical channel conditions. For example, higher spreading factors and higher FEC overhead lead

to more robust data transmission and hence reduced retransmissions. While they reduce the user throughput rate, the rate is less affected by range (channel conditions). Furthermore, there are a large number of combinations of spreading factor values and FEC schemes that can be used for optimal performance. In contrast, the WLAN standard does not specify FEC schemes and link performance relies entirely on retransmissions of erroneous data. Furthermore, transmit power control is an important element of TDD that provides for the robustness of data transmission. In addition, power control also provides the ability to maintain a constant user throughput rate by trading off transmitted power. In contrast, WLANs use fixed power for transmission and reduce the instantaneous link rate to account for channel losses. As a result of these two factors, the user throughput rates are much less affected by range in TDD compared to WLANs. Preliminary data supporting this claim are depicted in Figure 9.3 [InterDigital Studies].

Cell performance of the WLAN and TDD systems can be characterized in terms of coverage (throughput) performance as the number of users is increased. It was shown in Section 9.3 that the contention-based multiple access scheme in WLAN causes the aggregate throughput to fall considerably as the number of users increases (see Figure 9.2). In contrast, the TDD multiple access scheme does not rely on a contention basis, so that the aggregate throughput is less affected by the number of users. Strictly speaking, the timeslotted nature of the TDD air interface as well as the discrete nature of the so-called 'Resource Units' causes some degradation, but it is thought to be relatively small. Second, the increased number of users results in increased multi-user interference, but this is suppressed by advanced receiver algorithms, such as Multi-User Detection.

Thanks to the reduced dependence on range as well as the number of users, the user experience is more uniform in TDD across the coverage region of a cell compared to WLANs.

Finally, the system capacity in a multicell scenario requires cell planning and radio channel reuse, resulting in co-channel interference. As noted earlier in Section 9.1.3, WLAN are limited to three radio channels, whereas TDD enables the separation of cells in the code domain in addition to the frequency domain. If required, cell planning could also exploit the time domain, by assigning different timeslots to different cells. This allows for highly scalable systems using TDD technology.

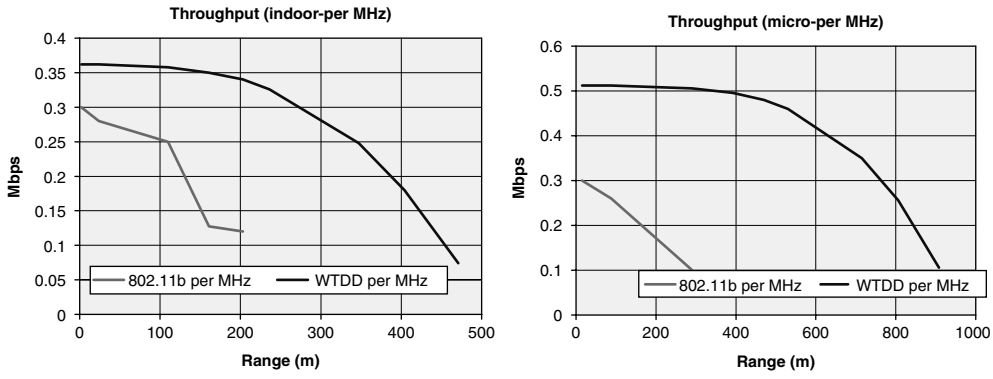

Figure 9.3 Comparison of WLAN and TDD Throughput/Cell for Indoor and Outdoor Micro Deployments

9.1.5 Deployment Considerations for UMTS TDD and WLAN Systems

First, we should recall the salient distinguishing aspects of TDD and WLAN systems, which were previously discussed. They fall into the areas of license/unlicensed spectrum and susceptibility to interference, scalability, connectivity to mobile core network, security, QoS control, support for voice services and power consumption. The licensed/unlicensed spectrum and susceptibility to interference issues suggest that WLAN is well suited to controlled environments such as indoor home and enterprise, whereas TDD is well suited to indoor enterprise as well as outdoor public environments. The scalability issue suggests that WLAN are well suited to hot spot coverage whereas TDD is well suited for hot spots as well as wider area deployments. The connectivity to the mobile core network issue suggests that TDD systems can benefit from subscriber management aspects (such as authentication, billing and customer care) from the core network, whereas WLANs require additional new (yet to be standardized) interfaces with the core network. The security, QoS control as well as the voice services issues clearly suggest that TDD systems offer mature proven solutions to these three aspects, whereas WLANs are evolving in that direction. Finally, the power consumption issue suggests that TDD-based devices permit low power hand-held user equipment, whereas WLAN-based devices are likely to continue to serve the laptop market well.

9.2 WTDD – TDSCDMA COMPARISON

TD-SCDMA has been harmonized with the UMTS WTDD standard under 3GPP as the Narrowband option (1.28 Mcps). In this section, we shall treat TD-SCDMA synonymously with the narrowband option (1.28 Mcps) of the 3GPP WTDD standard. We shall briefly discuss the TD-SCDMA standard, with details on the physical layer, L2/3 (SW), and resource management.

9.2.1 TD-SCDMA in the Standards Evolution

CWTS of China originally proposed the TD-SCDMA standard to the ITU in 1998. In the course of standards development for UMTS world-wide, TD-SCDMA was submitted to 3GPP in 2000 and harmonization of TD-SCDMA and the TDD option of UMTS standard has begun. Today TD-SCDMA is synonymous with the low chip rate option (1.28 Mcps) of UMTS TDD. Figure 9.4 shows the TD-SCDMA evolution.

A variation of TD-SCDMA, which is seen as an interim evolutionary path is called TSM where the TD-SCDMA air interface physical layer is accompanied by a modified GSM protocol stack. This option has limited lifecycle and was intended to develop into TD-SCDMA with the UMTS protocol stack for support of true 3G services. Therefore, we will not consider TSM here.

9.2.2 Comparison

HCR TDD (i.e. WTDD) and LCR TDD (i.e. TD-SCDMA) have much in common and share the same technology foundation. Both HCR TDD and LCR TDD are built on the same core network and can be common down to the Access Stratum level at the RNC.

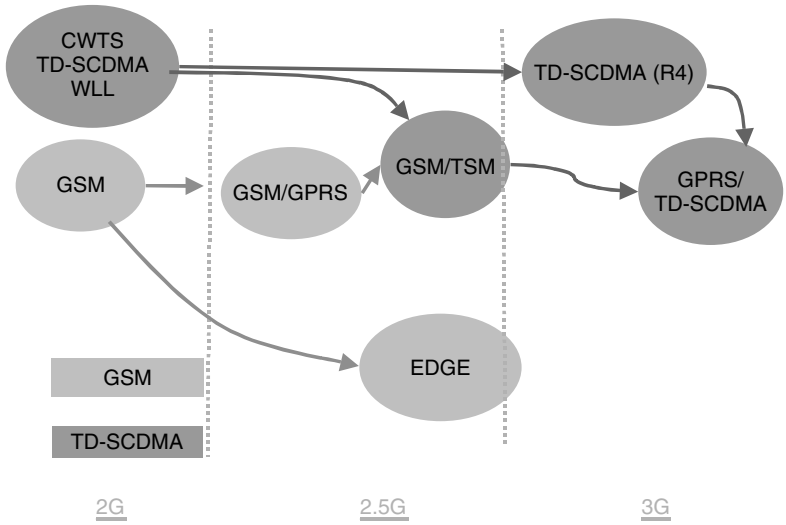

Figure 9.4 TD-SCDMA Evolution

Additionally, there is a high degree of commonality between L2/3 protocol stack for the two 3GPP modes – TD-SCDMA and WTDD and a high degree of commonality in the physical layer.

Both HCR and LCR use the unpaired spectrum, and can equally support a symmetrical as well as an asymmetrical traffic mixture of achieving high spectral efficiency at low cost.

There are, however, subtle differences between the technologies, which stem from the different chip rates, frame structure, the multiple carriers and the seemingly prevalent usage of antenna arrays for LCR base stations, as shown in Table 9.1.

Antenna arrays are not mandatory in either the LCR or the HCR variants of TDD. Moreover, both variants are well extendable to usage of adaptive antennas (both in BS and UE), with receivers that are very suitable for joint space-time processing. The industry trend appears to be that antenna arrays are considered an integral part of LCR TDD, whereas they only represent an extension to HCR TDD.

Lower chip rate and different frame structure, combined with antenna arrays in the base station, allow LCR TDD to serve larger cells (~11 km for LCR vs. ~4 km for HCR), which makes LCR more suitable for supporting both urban and rural deployment. The lower chip rate version requires higher SNR to achieve very high data rates (1–2 Mbps), and more slots for moderate rates (144–384 kbps). Low chip rate also tends to raise the required signal to noise ratio, by decreasing path diversity for smaller cells in urban environment. On the other hand, the LCR multiple carriers, coupled with intelligent RRM strategies, more effectively eliminate the inter-cell interference that is dominant in urban deployment. Therefore the capacity and coverage of traditional (without smart antennas) LCR and HCR, occupying the same bandwidth, are expected to be similar. Smart antennas, if deployed in both, will tend to decrease the benefits of multiple carriers, thus HCR is expected to perform better than LCR when both use smart antennas. In summary, LCR TDD with smart antennas may be better for rural/suburban, while HCR TDD could be better for urban.

Table 9.1 Comparison of HCR and LCR TDDs

Item	LCR	HCR
Physical range	~11 km	~4 km
Likely maximum data rate	384 kbps, 1–2 Mbps (with high density constellation)	2 Mbps
Integration with UMTS network	CN, RNC	
Integration with UMTS WCDMA (FDD) mobiles	High	
Smart antenna usage	Optional but industry trends indicate it may be prevalent	Optional
Asymmetric data handling	Yes	Yes
Coexistence: BS-BS	Conditionally feasible but easier due to multiple carriers	Conditionally feasible
Coexistence: MS-MS	Even easier due to inter-frequency handover	Feasible to very high densities
Support of UMTS services and applications	Yes	
Handover to UMTS FDD	Yes	

The multiple carriers allow for more flexible deployment to solve BS-BS coexistence problems between TDD base stations, or between TDD base stations and FDD base stations. This is achieved by usage of a sub-5 MHz guard band, giving up usage of 1 out of 3 carriers for those applications, where offered load is low but coexistence is particularly demanding (e.g. in rural applications). In a similar manner, in urban deployment the carrier closest to FDD could be reserved for pico deployment where it will not pose any problem. The multiple carriers also allow more flexible mitigation of MS-MS interference (from FDD or another TDD) by handing over to a non-adjacent carrier.

9.2.3 TD-SCDMA Potential Deployment Scenarios

Shown in Figure 9.5 are two example deployment scenarios for TD-SCDMA.

In the scenario marked Part-a, three TD-SCDMA carriers are co-located in a single 5 MHz band, which may allow for common RF hardware and antennas. Adjacent 5 MHz bands may provide hierarchical cell structure, catering to different load conditions. The figure shows macro and pico cell structures. Finally, the collocation of the TD-SCDMA carriers may require coordinated operation, in terms of the uplink/downlink switching points.

Another example deployment scenario is marked as Part-b in the above figure, where hierarchical cell structures are employed within adjacent 5 MHz bands. The figure shows macro, micro and pico cells using three adjacent TD-SCDMA carriers in a 5 MHz band. The coupling loss between the carriers providing like coverage (e.g. macro) is increased, so that uncoordinated operation may be possible. However, the sharing of RF and Antennas is not possible here, which may increase the deployment cost.

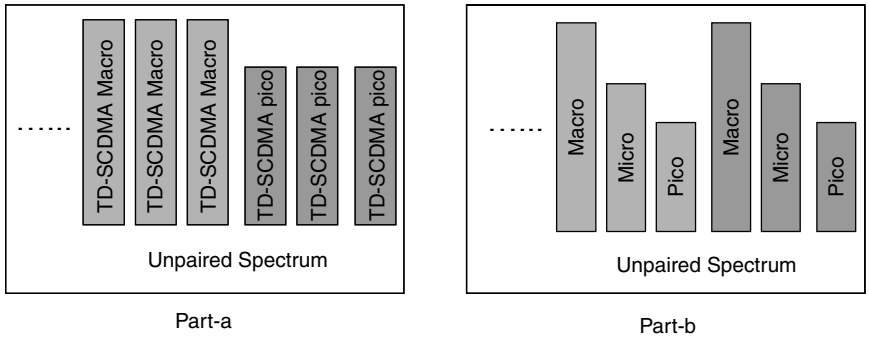

Figure 9.5 Example Deployment Scenarios of TD-SCDMA

REFERENCES

[1] 'Relative Assessment of UMTS TDD and WLAN Technologies', UMTS Forum Report #28, March 2003.
[2] 'TGb proposal Comparison Matrix', IEEE P802.11, doc IEEE802.11 98/276, July 1998 and InterDigital Studies.
[3] James C. Chen and Jeffrey M. Gilbert, 'Measured Performance of 5 GHZ 802.11a Wireless LAN Systems', Atheros Communications, 08/27/2001 and InterDigital Studies.
[4] A. Kamermann and G. Aben, 'Throughput Performance of Wireless LANs Operating at 2.4 and 5 GHz', Lucent Technologies.

Index

2G Radio Access Network/Base Station Subsystem, 5
A Interface, 5, 6
Gb Interface, 5, 6
3GPP/SA, 231
802.11, 229
802.11a, 229–231, 233, 235
802.11b, 229–235
802.11e, 230, 235
802.11f, 230
802.11g, 229–231, 235
802.11i, 230

Access Service Class (ASC), 97, 98
Access Service Classes (ASCs), 53
Access Stratum (AS), 11
MAC, 11
PDCP, 11
RLC, 11
RRC, 11
Acknowledged Data Transfer, 72, 73
Acknowledged Mode Data (AMD), 74, 76
ACLP, 218, 221
Adaptive Modulation, 3
Adjacent Channel Leakage, 217
Adjacent Channel Leakage Ratio (ACLR), 217, 218, 221
Adjacent Channel Selectivity (ACS), 217, 218
AMR Vocoder, 182
AMR Voice Coders, 231
Antenna Array, 238
Approximate Cholesky/LDL^H Factorization, 162
Association of Radio Industries and Businesses (ARIB), 1
Authentication Center (AuC), 6
Automatic Gain Control (AGC), 172

Background DCA, 193, 200
Beamforming, 154
Bit Error Rate (BER), 153, 166, 167, 169
Blind Code Detection, 42, 154
Block Error Rate (BLER), 153
Bluetooth, 231
BMC Protocol, 79
BMC architecture, 79
BMC Layer-to-Layer Communication, 80
BMC Primitives, 80
CBMC Primitives, 80, 81
BMC Peer-Peer Communication, 80
BMC Services and Functions, 79

Capacity Enhancement Deployment, 209
Capacity Optimization, 176
CAPEX, 209
cdma2000, 3

Wideband TDD: WCDMA for the Unpaired Spectrum P.R. Chitrapu
© 2004 John Wiley & Sons, Ltd ISBN: 0-470-86104-5

Cell/Time slot load, 199
Cell Coverage, 229, 233
Cell Planning, 229, 233, 236
Cell Reselection, 93, 95, 128, 130
Cell Search, 95, 97, 169, 170
  Code Group Identification and Slot Synchronization, 95
  Frame Synchronization, 95, 97, 138
  Hierarchical Golay Correlator (HGC), 171, 172
  Initial Cell Search Algorithm, 170, 172, 173
  Primary Synchronization Code Acquisition, 95
  Targeted Cell Search Algorithm, 170, 171
Cell Selection, 83
Cell-Based RRM, 175, 176
  Cell Optimization, 175
  Cell/ Network Initialization, 175
  Network Stability, 175
CELL/ URA Update Procedures, 127
  Cell Update Confirm, 128, 129
  Downlink Signaling Transfer Request, 129
  Uplink Signaling Transfer Indication message, 128, 129
  URA Update Confirm, 129
  UTRAN Mobility Information Confirm, 128
Channel Estimation, 151, 154, 156, 157, 161, 167
Channelization Code, 21, 26, 27
Cholesky Decomposition, 161–164
Ciphering, 67, 73, 74, 76, 83, 84
Circuit Switched (CS), 5, 6, 13, 14
  Gateway MSC (GMSC), 5
  Mobile Switching Center (MSC), 5
  PLMN, 5, 6
  PSTN, 5, 17
CN Domain Indicator, 101, 104
Code Division Multiple Access (CDMA), 21, 39
Code Fragmentation, 200, 201
Code Management, 193, 194
Code Specific Multipliers, 27
Coded-Composite Transport Channels (CCTrCH), 43, 45, 49, 50, 55–61
Coexistence, 216
  Coexistence Analysis, 223
  TDD-FDD Coexistence, 220
Common Channel Control, 176
Congestion Control, 176, 195
  Fast Congestion Control (FCC), 195, 196
  Slow Congestion Control (SCC), 195, 196
Convolutional Codes, 29, 40
Core Network (CN), 5–9, 11, 13, 15, 18
  Circuit Switched (CS), 5
  Packet Switched (PS), 5
Coupling Loss, 217, 218
  Minimum Coupling Loss (MCL), 218, 219
CPHY Primitives, 63
  Control Primitives, 63
  Measurement Primitives, 63
  Status Primitives, 63
    Synchronization Primitives, 63
CSMA/CA, 230, 231, 233

Data Capacity, 215
Data Detection, 151, 157, 158
Data Transmission Initialization Procedures, 136
  Data Flow Initialization Procedure, 136
  Inter-Layer Procedure, 129, 138
Data Transmission Procedure, 94
DCF, 230, 235
Decorrelation distance, 37
Deployment Analysis, 211
  Pseudo Analytic Approach, 211
  Static Simulator Approach, 213
DFT Algorithm, 151
Discontinuous Reception (DRX), 90, 103
Doppler, 173
Downlink Closed Loop Power Control, 33
DRX/Sleep Mode, 90
Dynamic Channel Allocation (DCA), 176
  Fast DCA Algorithm (F-DCA), 176
  Slow DCA Algorithm, 176, 177

Dynamic Persistence Level, 179, 191, 192
Dynamic Persistence level, 98

End To End communication Procedures, 94, 139
  Authenticity and Security, 139, 142, 147
  CS Call and PS Session Data Procedures, 147
  CS Call Control Procedures, 143
    Call Connect Procedure, 145
    Call Setup Procedure, 144
  PS Session Control Procedures, 146
  UE Registration Procedures, 139
End to End Communication Set up procedure, 94
  Circuit Switched Call Set Up procedure, 94
  Packet Switched Session Set Up Procedure, 94
Enhanced Datarate for Global Evolution (EDGE), 1
Enhanced GPRS (EGPRS), 25
European Telecommunication Standards Institute (ETSI), 1
Exhaustive Search Algorithm, 204

FACH Flow Control, 192, 193
Fast Dynamic Channel Allocation (FDCA), 228
Fast Permutation Method, 204
FDD-WCDMA (FDD-WCDMA), 25–27
Flow Control, 72, 73
Fragmentation penalty, 201, 203
Frame Allocation Parameters, 49
  Activation Time, 49
  Duration, 49
  Repetition Length, 49
  Repetition Period, 49
Frame Handling Priority, 196
Frequency Division Duplex (FDD), 25–27
Front End, 151, 152

General Packet Radio Service (GPRS), 25
Group Special Mobile (GSM), 25, 26
GSMA, 231
Guard Period, 22, 23

Handover, 93, 110, 130, 132, 134, 176, 178, 203, 206
Handover Procedures, 130
  Hard Handover, 130, 132
  Inter –RAT hanover, 130
  Inter-cell Inter frequency handover, 130
  Inter-cell Intra-frequency Hanover, 130
  Inter-mode handover, 130
  Inter-RNS Handover, 130
  Soft Handover, 130
Hierarchical Golay Correlator (HGC), 171
  Auxiliary HGC, 171, 172
High Chip Rate (HCR) TDD/Wideband TDD (WTDD HCR-TDD, 2, 10
High Speed Downlink Packet Access (HSDPA), 3
HiperLAN, 229
Home Location Register (HLR), 6
Hot zone Deployment, 209

I-mode (I-mode), 26
IEEE 802 LAN/MAN, 3
  802.11a, 3
  802.11b, 3
  802.11g, 3
  802.15 Wireless Personal Area Network, 3
  Wireless Wide Area, Metropolitan Area Networks (802.16), 3
Indoor Pico Cells, 209
Inter Symbol Interference (ISI), 160, 166
Inter-Cell Interference, 198
Interconnection/Internetworking, 231
Interference Mechanisms, 216, 217
  BS-BS, 216, 220
  FDD Interference, 228
  MS-MS, 216, 227, 228
Interleaving, 29, 31
International Mobile Subscriber Identity (IMSI), 54
International Mobile Telecommunications-2000 (IMT-2000), 1
International Telecommunications Union (ITU), 1
Intra-Cell Interference, 198

Intra-cell Interference, 27
IP-based Multimedia Subsystem (IMS), 5
  Multimedia Services, 5
  Vo-IP, 16
IS-95 (IS-95), 25
ISM Band, 230
Iub Interface, 44

Joint Channel Estimation, 151, 154
Joint Detection, 158
  Minimum Mean Square Error BLE with Decision Feedback (DF) (DF MMSE-BLE), 162
  Minimum Mean Square Error Block BLE (MMSE-BLE), 159, 161, 162, 166, 167
  Zero Forcing BLE with Decision Feedback (DF) (DF ZF-BLE), 159, 161
  Zero forcing Block Linear Equalizer (ZF-BLE), 159–161, 167
Joint Detection (JD), 40, 41

Layer 1 Communication, 59
  Inter Layer Communication, 61
    PHY Primitives, 61, 63
  Layer 1 Processing, 59
Layer 1 Structure, 48
  Physical Channels, 48
  Transport Channels, 55
Layer 2 Communication, 65
  MAC Protocol, 65, 66
  RLC Protocol, 71
Layer 2 Structure, 63
  BMC, 63
  Logical Channels, 63
  MAC, 63
  PDCP, 63
  RLC, 63
Layer 3 Communication, 81
  RRC Protocol, 81
Linear Sequence Estimation (LSE), 166
Link-Based RRM, 175, 176
  Radio Link Establishment, 175
  Radio Link Quality Maintenance, 175
Location Area (LA), 89, 100, 101
Log-normal fading, 37
Logical Channels, 43–46, 48, 56, 64, 65, 67–74, 76, 84
  Control Channels, 46, 63
    Broadcast Control Channel (BCCH/L), 46, 63
    Common Control Channel (CCCH/L), 46, 63
    Dedicated Control Channel (DCCH/L), 46, 64
    Paging Control Channel (PCCH/L), 46, 63
    Shared Channel Control Channel (SCCH/L), 46, 64
  Traffic Channels, 46
    Common Traffic Channel (CTCH/L), 46, 64
    Dedicated Traffic Channel (DTCH/L), 46, 64

MAC Protocol, 67, 68
  MAC Architecture, 65
    MAC-b, 65
    MAC-c/sh, 65, 66
    MAC-d, 65, 66
  MAC Layer to Layer Communication, 70
    CMAC Primitives, 71
    MAC Primitives, 70
  MAC Peer-Peer Communication, 67
  MAC Services and Functions, 66
Manhattan like Deployment, 210
Matched Filter, 151, 157, 158, 165
Maximal Ratio Combining, 40
Maximum Likelihood, 156
Measurement Procedures, 122
  Common UE Measurements, 123
  Measurement Control Message, 122, 125
  Measurement Reporting Methods, 125
    Event triggered, 125
    Periodic, 125
  Measurement Types, 123
  Specific UE Measurements, 123
Measurement Types, 123
  Inter RAT Measurement, 125

Inter-Frequency Measurement, 123
Intra-Frequency Measurement, 123
Quality Measurement, 125
Traffic Volume Measurement, 112, 125
UE Internal Measurement, 125
UE Positioning Measurement, 125
Midamble, 22–24, 34, 41, 154–157, 169–171
Mobile Radio Channel, 36
Mean Pathloss and Shadow Characteristics, 36
Multipath, 37, 38
Mobile Switching Center (MSC), 6, 11, 15
CS-Media Gateway (CS-MGW), 6, 7
MSC Server, 6
Mobility Management (MM), 89, 93
Mobility management Procedures, 94
Cell/URA Update Procedures, 90, 93, 94, 127
Handover Procedures, 90, 93, 94, 130, 132
LA/RA Update Procedures, 93, 94
SRNS Relocation Procedures, 93, 94
Modem Receiver, 38
Detection of Direct Sequence Spread Spectrum Signals, 39
Joint Detection Receiver, 41
Rake Receiver, 39
RF Characteristics, 38
Input Selectivity, 39
Input Sensitivity, 38
Modem Transmitter, 28
Error Protection, 29
CRC (Cyclic Redundancy Check) Coding, 29
Forward Error Correction (FEC), 29
Interleaving and Rate Matching, 31
Pulse Shaping, 32
RF Characteristics, 32
Transmit Diversity, 34
WCDMA and TDMA Processing, 32
MSC Server, 6
Call Control, 6, 11
Mobility Control, 6
MT, 18
Multi User Detector (MUD), 151, 154, 158, 166
MMSE Joint Detection (MMSE-BLE), 151
Zero Forcing Joint Detection (ZF-BLE), 151
Multi-user Detection (MUD), 27
Multi-user Detection MUD, 27
Multicode Transmission, 61
Multimedia Messaging Service (MMS), 26
Multiple Access Interference (MAI), 166

NAS primitive, 95
NAS Signaling Message Transmission Procedures, 135
Near-Far Problem, 114
Network Capacity, 210
Network Congestion, 176
Network Stability, 175, 176
Network-Based RRM, 175
Node B, 7
Node B Application Part (NBAP), 12, 13
Node B Measurements, 127
Common Measurement Types, 127
Load, 127
Received total wideband power, 127
SFN-SFN Observed Time Difference, 127
Transmitted Carrier Power, 127
UL Timeslot ISCP, 127
UTRAN GPS Timing, 127
Dedicated Measurement Types, 127
RSCP, 127
Rx Timing Deviation, 127
SIR, 127
Transmitted Code Power, 127
Noise Rise, 199
Non-Access Stratum (NAS)
Session Management (SM), 11
Short Message Service (SMS), 11
Supplementary Service (SS), 11

Orthogonal Variable Spreading Factor (OVSF) codes, 27
Over Sampling, 155, 172
Over the rooftop Macro or Micro Cell deployment, 209

Packet Data Protocols (PDCP), 77–79
PDCP Layer to Layer Communication, 78
CPDCP Primitives, 78, 79
PDCP Primitives, 78, 79
PDCP Peer-Peer Communication, 78
PDCP services and Functions, 78
Packet Data Protocols (PDCP)
PDCP architecture, 77
Packet Error Rate, 233–235
Packet Switched (PS), 5, 6, 11, 13, 14
Gateway GPRS Support Node (GGSN), 5
Serving GPRS Support Node (SGSN), 5
TCP/IP, 6
Paging Block, 103
Paging Indicators (NPIB), 54
Paging Message Receiving Occasions (PMROs), 103
Paging Procedure, 99, 101
Broadcast Paging, 100, 101
Paging at layer 1, 103
Paging Process, 100
Paging types, 99
Paging/Notification, 83
Parallel Interference Cancellation (PIC) Detectors, 165, 168
PCF, 230, 235
Permanent DCH, 185
Permanent NAS UE identity, 101, 104
Personal Digital Cellular (PDC), 1
Physical Channel Processing, 151, 152
Physical Channels, 43, 45–50, 56, 59–61
Dedicated Physical Channels DPCH/P, 47, 49, 59
Paging Indicator Channel (PICH/P), 48, 54
Shared Channels, 54, 58, 64
Physical Downlink Shared Channel (PDSCH/P), 54, 81
Physical Random Access Channel (PRACH/PC), 52–54
Physical Uplink Shared Channel (PUSCH/P), 54, 81
Primary Common Control Physical Channel (PCCPCH/P), 51
Secondary Common Control Physical Channel (SCCPCH/P), 51
Synchronization Channel (SCH/P), 48, 51
Physical Layer RRM Algorithms, 196
Cell/Time slot load, 199
Inter-Cell Interference, 177, 199, 201
Intra-Cell Interference, 201
Noise Rise, 199, 205, 206
Power Rise, 198, 199
Radio Measurements, 179, 180, 196
Timeslot Fragmentation, 198, 200, 201, 205, 206
PI, 103
Power Control (PC), 107, 108, 114, 116, 133
Power Control Procedures, 114
Closed Loop PC, 116
Down Link Power Control (DL PC), 116
Inner Loop PC, 114, 117, 118
Open Loop PC, 116
Outer Loop PC, 114, 117
Uplink Power Control (UL PC), 117
Power Rise, 198
Primary Synchronization Code (PSC), 25, 26
Protocol Architecture, 45, 77, 79
Control Plane (C-plane), 46
Service Access Points (SAPs), 45
User Plane (U-plane), 46
Protocol Data Unit (PDU), 65–74, 76, 79, 84, 89
Pulse Shaping, 32, 33
Puncturing Limit (PL), 184

Quality of Service, 15–17
Attributes (UMTS QoS Attributes), 18
Quality of Service (QoS), 108, 114, 130, 136, 148

RAB/RB Establishment Procedures, 106
RAB Assignment Request message, 107, 108, 136
Radio Access Bearer Assignment Response message, 108

Radio Bearer Setup Complete message, 108, 110, 138, 139
Radio Bearer Setup message, 108, 110, 138
Radio Link Restore Indication message, 108, 134
Radio Link Setup Request message, 107, 132–134, 136, 137
Radio Link Setup Response message, 107, 133, 134, 137
RAB/RB Management Procedures, 110
Measurement Report Message, 112
Physical Channel Reconfiguration Complete Message, 114, 134
Physical Channel Reconfiguration Message, 112, 134
Radio Access Bearer Assignment Response message, 112
Radio Bearer Reconfiguration Complete message, 112
Radio Bearer Reconfiguration message, 112
Radio Link Reconfiguration Commit message, 112
Radio Link Reconfiguration Prepare message, 110
Radio Link Reconfiguration Ready message, 112
RACH Control, 190–192
Radio Access Bearer (RAB), 43, 44
Radio Access Network (RAN), 5, 18
Radio Interface (Uu), 5
UMTS Terrestrial Radio Access Network (UTRAN), 5
Radio Access Network Application Part (RANAP), 99, 101, 104, 107, 108, 110, 135, 136, 139–141, 143–146
Radio Bearer, 43, 44, 46, 63–65, 67, 79, 83
Radio Bearer Control Function, 107, 108
Radio Interface (Uu), 5, 7, 8, 10–12, 15, 18, 43–46, 48, 49, 57, 61, 77–79
FDD, 5, 8, 10
HCR-TDD /Wideband-TDD, 10
LCR-TDD/TD-SCDMA, 10
TDD, 5, 8, 10, 15, 16
Radio Link Establishment and Management Procedure, 94
DTX Procedure, 93, 94
Power Control Procedure, 93, 94, 114
RAB/RB Establishment Procedure, 94, 106
RAB/RB management Procedure, 94
Radio Link Failure Detection and Reporting, 94
Radio Measurement Procedure, 94
RRC Connection Procedure, 93, 94, 104
Timing Advance Procedure, 93, 94, 119, 121
Radio Network Controller (RNC), 7–9, 13, 14, 18
Controlling RNC (CRNC), 9
Handover, 7
Iu Interface, 11
Iub Interface, 7, 12
Iur Interface, 8, 12, 14
Serving RNC (SRNC), 8
Radio Network Layer (RNL), 13
Control Plane, 12–14
RAN Application Protocol (RANAP), 12
RNS Application Protocol (RNSAP), 12
Radio Network Subsystems (RNS), 9
Drift RNS (DRNS), 9
Node B, 8, 9, 13, 18
Radio Network Controller (RNC), 7
Serving RNS (SRNS), 8
Radio Resource Management (RRM), 21, 23, 27
RAKE Receiver, 151, 157, 158, 169
Rake Receiver, 39, 40
Random Access Channel, 53
Random Access Procedure, 93
Rate Adaptation, 176
Rate Matching, 32
Resource Unit (RU), 184, 194, 200, 202, 204, 236
Reuse factor, 234
RF Characteristics
Adjacent Channel Leakage Ratio (ACLR), 33

RF Characteristics (*continued*)
Frequency Characteristics, 32, 33
Frequency Stability, 32, 33
Input Selectivity, 32
Input Sensitivity, 32
Modulation Imperfections, 32, 33
Error Vector magnitude (EVM), 33, 34
Peak Code Domain Error (PCDME), 34
RF Spectrum, 32, 33
Spurious Emissions, 33
Transmit Power, 32, 33
RLC Modes, 64, 67, 73, 79
Acknowledged Mode (AM), 64
Transparent Mode (TM), 64
Unacknowledged Mode (UM), 64
RLC Protocol, 72, 73
RLC Architecture, 71
RLC Layer-Layer Communication, 76
CRLC Primitives, 76
RLC Primitives, 89
RLC Peer-Peer Communication, 73
RLC services and Functions, 72
RNC Functional Architecture
Radio Interface Protocols, 11
MAC, 11
RLC, 11
RRC, 11
System
Broadcast, 7
Paging, 7
Routing Area (RA), 89, 100
RRC Architecture
Broadcast Control Function Entity (BCFE), 81
Dedicated Control Function Entity (DCFE), 81
Paging and Notification Control Function Entity (PNFE), 81
Routing Function Entity (TFE), 81
Shared Control Function Entity (SCFE), 81
Transfer Mode Entity (TME), 81
RRC Connection Procedures, 104
Procedure Between network Elements, 104
Procedure Between Protocol Entities, 105
RRC Connection Release message, 105
RRC Connection Request message, 105
RRC Connection Setup Complete message, 105
RRC Connection Setup message, 105, 121
RRC Modes, 89
Connected Mode, 89, 90, 93, 97, 100, 101, 103–105, 107, 127, 130, 135, 136
Idle Mode, 89, 90, 93, 97, 100, 101, 103–105, 139
RRC Protocol, 66, 67, 81
RRC Architecture, 81
RRC Layer to Layer Communication, 84
RR_Data, 84
RR_Establishment, 84
RR_Synchronization, 84
RRC Peer to Peer Communication, 84
RRC Services and Functions, 82
RRC States, 89, 90, 105, 107, 112
CELL_DCH, 89, 90, 93, 100, 104, 105, 107, 112, 121, 122, 130, 132
CELL_FACH, 89, 90, 93, 97, 100, 104, 105, 107, 112, 122, 127, 148
CELL_PCH, 89, 90, 93, 97, 99, 101, 103, 127
URA_PCH, 89, 90, 93, 97, 99, 101, 103, 127
RRM Functions, 177
Admission Control, 178
Call Admission Control (CAC), 179, 193
Session Admission Control, 178
User Admission Control (UAC), 176, 178, 179
Cell Initialization, 177
Allocation of Midambles, 177

Allocation of Primary Synchronization Codes, 177, 178
Allocation of Scrambling Codes, 177
Configuration of Time Slots, 177
Setup of Common Radio Measurements, 177
Cell Maintenance, 190
Radio Bearer Establishment, 177, 179
CCTrCH Mapping, 183
Logical Channel Mapping, 181
Physical Channel Mapping, 184
RLC Configuration, 180, 181
Transport Channel Mapping, 182
Radio Bearer Maintenance, 186
DL Inner Loop Power Control, 188
DL Outer Loop Power Control, 188
Radio Link Rate Control, 186
Transmit Power Control, 176, 187
UL Inner Loop Power Control, 189
UL Outer Loop Power Control, 190
RTS/CTS, 230, 235

Scrambling Code, 28, 41
Secondary Synchronization Code (SSC), 25, 26
Service Access Points (SAPs), 46, 63
Dedicated Control (DC), 46, 81, 82
General Control (GC), 46, 81, 82
Notification (Nt), 46, 81
Service Data Unit (SDU), 63, 65, 69, 70, 72–74, 76, 78
shadowing, 37
Signal to Interference Ratio (SIR), 153
Silence Descriptor (SID), 182
Single User Detector (SUD), 154, 157, 158
Spreading Code , 21, 26–28, 34, 39–41
Spreading Factor, 23, 26–28, 40
SRNC Relocation, 128
Start up Automatic Frequency Control (AFC), 173
Steiner Algorithm, 151, 154, 155
Street Level Deployment, 209, 211
Sub-optimal MUD
Joint Detection, 158
Block Linear Equalizer (BLE), 158
Linear Detector, 158
Parallel Interference Cancellation (PIC), 158
Successive Interference Cancellation (SIC), 158
Successive Interference Cancellers (SIC) Detectors, 165
System and UE Access Procedures, 94
Paging Procedure, 93, 94, 99
PLMN and Cell Search Procedures, 93, 94
Random Access Procedure, 94, 97, 98
Registration/Authentication Procedure, 94
System Information Block (SIB), 85
System Procedures, 94
BS Synchronization Procedure, 93, 94
System Information Broadcast Procedure, 94

TDD, 21, 33, 34, 36, 38
System Frame Number (SFN), 21
TDD Capacity, 214
TDD-WCDMA, 21, 28, 40, 41
TDMA, 21, 22
Data Burst Structure, 22
Midamble Generation, 23
Syncronization Bursts, 25
TE, 17
Telecommunications Industry Association (TIA), 1
Temporary DCH, 185
Temporary UE Identity, 101, 104
TFCS, 181, 182, 184
Third Generation Partnership Project (3GPP), 21, 24, 25
TIA/EIA-54/136, 1
TIA/EIA-95 CDMA, 1, 3
Cdma2000, 1, 3
Cdma2000 1x EV-DV, 3
Cdma2000 3x, 3
TIA/EIA-95 cdmaOne, 1
Time Delay (TD), 120
Time Division Duplex (TDD), 1–3
Time Division Duplexing (TDD), 21

Time Division Multiple Access (TDMA), 1, 2, 21
Timeslot Fragmentation, 198
Timing Advance Operation, 22, 23
Timing Advance Procedures, 119
  Initial Timing Advance, 120
  Steady State Timing Advance, 121
Toeplitz matrix, 156, 163
Traffic Capacity, 214
Traffic Classes, 16, 18
  Background Class, 17
  Conversational Class, 16
  Interactive Class, 16
  Streaming Class, 16
Traffic Volume Measurement, 67, 71
Traffic Volume Measurement (TVM), 182
Training Sequence, 154
Transmission Time Interval (TTI), 55, 56, 58, 59, 61, 63, 68, 73, 81
Transmit Diversity, 34, 154, 159
  Closed Loop, 34, 36
    Selective Transmit Diversity, 34
  Open Loop, 34
    Space Code Transmit Diversity (SCTD), 34
    Time Switched Transmit Diversity (TSTD), 34
Transmit Power control (TPC), 23
Transparent Data Transfer, 72
Transparent Mode Data (TMD), 73
Transport Block (TB), 55, 57–59, 61, 67, 68
Transport Channel Processing, 152
Transport Channels (TrCH), 43, 45–48, 55–57, 61, 63–67, 70, 71
  Common or Shared Channels, 46
    Broadcast Channel (BCH/T), 47, 52, 54, 58, 59, 64
    Downlink Shared Channel (DSCH/T), 46, 58, 59, 66
    Forward Access Channel (FACH/T), 46, 48, 51, 58, 59, 66, 69, 70, 79, 80
    Paging Channel (PCH/T), 47, 51, 54, 58, 59, 66
    Random Access Channel (RACH/T), 47, 52, 58, 59, 66, 67, 69, 71
    Uplink Shared Channel (USCH/T), 46, 58, 59, 66
  Dedicated Channels, 46
    Dedicated Transport Channel (DCH/T), 46, 58, 59, 61
Transport Format (TF), 55, 56, 67, 72
Transport Format Combination (TFC), 56, 57, 67
Transport Format Combination Indicator (TFCI), 23
Transport Format Indicator (TFI) , 56
Transport Format Set (TFS), 182
Transport Network Layer (TNL), 12
  Control Plane, 12–14
    ALCAP Protocols, 12–14
  User Plane, 12–14
TSM, 237
Turbo Codes, 29, 30
  Parallel Concatenated Convolutional Code (PCCC), 29

UE Measurement, 83
  Carrier RSSI, 63
  PRACH/PC Propagation Delay, 63
  Received Signal Code Power (RSCP), 63
  Received Total Wideband Power, 63
  Round Trip Time, 63
  RSCP, 63
  Rx Timing Deviation, 63
  Signal to Interference Ratio (SIR), 63
  SIR, 63
  Timeslot ISCP, 63
  Transmitted Power, 63
  Transport Channel BER, 63
  Transport Channel BLER, 63
UE measurements, 127, 132
  CCTrCH SIR, 125
  GSM RSSI, 125
  Path Loss, 117, 125
  PCCPCH/P RSCP, 117, 125
  SFN-SFN Observed Time Difference, 125
  Timeslot ISCP, 125

Traffic Volume, 125
TrCh BLER, 117, 125
UE transmitted Power, 125
UTRAN RSSI, 125
UMTS Architecture, 5
Core Network (CN), 5
Radio Access network (RAN), 5
UMTS Protocol Layers, 11
Access Stratum (AS), 11, 13, 18
Control Plane, 12
IP, 11
Layer 1, 11
Layer 2, 11
Medium Access Control (MAC), 11
Layer 3, 11
Call Control (CC), 11
Mobility Management (MM), 11
Radio Resource Control (RRC), 11
Non-Access Stratum (NAS), 11, 13
Radio Network Layer (RNL), 12
Transport Network Layer (TNL), 12
User Plane, 12
UMTS Services, 15
Non-Real Time (NRT), 16
Real Time (RT), 16
Unacknowledged Data Transfer, 72
Unacknowledged Mode Data (UMD), 74
Universal Telecommunications System (UMTS), 1, 2, 4
Uplink Open Loop Power Control, 33
Uplink Outer Loop Power Control, 153
User Authentication, 230–233
User Confidentiality, 232
User Data Privacy, 232
User Throughput, 229, 232, 233, 235, 236
UTRAN Architecture, 7
Core Networks, 7
Iu Interface, 7
Radio Network Subsystems, 7
UTRAN Interface (Iu), 11–14, 18
Iu-CS, 5, 13, 14
Iu-PS, 5, 14

Visitor Location Register (VLR), 6
Voice Capacity, 215

WCDMA, 21
Spreading and Modulation, 26
WEP, 232
Wide Area Broadband Data Deployment, 209
Wideband Code Division Multiple Access/Wideband CDMA (WCDMA), 21–23, 25–28
Wideband Time Division Duplex WCDMA (WTDD), 25–28
Wireless Application Protocol (WAP), 26
Wireless Local Area Network/Wireless LAN (WLAN), 3, 4
WLAN Encryption, 232