HAYNES BOONE

TESLA, INC. V. INTELLECTUAL VENTURES II LLC

IPR2025-00217 (10,952,153)
IPR2025-00219 (9,706,500)

Apple Inc. v. Aire Technology, Ltd., Case IPR2022-01135

Scott T. Jarratt, Dan Smith
Counsel for Petitioner

DEMONSTRATIVE EXHIBIT – NOT EVIDENCE

The ’153 and ’500 Patents

(12) **United States Patent**
Anderson

(10) **Patent No.: US 10,952,153 B2**
(45) **Date of Patent: *Mar. 16, 2021**

(54) **POWER CONTROL IN A WIRELESS NETWORK**

(71) Applicant: **Intellectual Ventures II LLC**, Wilmington, DE (US)

(72) Inventor: **Nicholas W. Anderson**, Exeter (GB)

(73) Assignee: **Intellectual Ventures II LLC**, Wilmington, DE (US)

(*) Notice: Subject to any disclaimer, the term of this patent is extended or adjusted under 35 U.S.C. 154(b) by 0 days.

This patent is subject to a terminal disclaimer.

(21) Appl. No.: **16/410,614**

(22) Filed: **May 13, 2019**

(65) **Prior Publication Data**

US 2020/0107271 A1 Apr. 2, 2020

Related U.S. Application Data

(63) Continuation of application No. 15/645,523, filed on Jul. 10, 2017, now Pat. No. 10,292,113, which is a

(Continued)

(51) **Int. Cl.**
H04W 52/24 (2009.01)
H04W 52/06 (2009.01)
(Continued)

(52) **U.S. Cl.**
CPC ***H04W 52/242*** (2013.01); ***H04W 52/06*** (2013.01); ***H04W 52/221*** (2013.01); ***H04W 52/24*** (2013.01); ***H04W 52/241*** (2013.01); ***H04W 52/243*** (2013.01); ***H04W 72/0473*** (2013.01); ***H04W 72/1268*** (2013.01);
(Continued)

(58) **Field of Classification Search**
CPC . H04W 52/242; H04W 52/06; H04W 52/221; H04W 52/24; H04W 52/241; H04W 52/243; H04W 52/08; H04W 52/10; H04W 52/12; H04W 72/0473; H04W 72/1268; H04W 72/1289
See application file for complete search history.

(56) **References Cited**

U.S. PATENT DOCUMENTS

5,257,283 A 10/1993 Gilhousen et al.
5,719,583 A 2/1998 Kanai
(Continued)

FOREIGN PATENT DOCUMENTS

CN 1159720 A 9/1997
CN 1343400 A 4/2002
(Continued)

OTHER PUBLICATIONS

"Recommendation ITU-R M. 1225: Guidelines for Evaluation of Radio Transmission Technologies for IMT-2000," International Telecommunication Union/ITU Radiocommunication Sector, Jan. 1, 1997, Rec. ITU-R M.1225, pp. 1-61.
(Continued)

Primary Examiner — Dominic E Rego
(74) *Attorney, Agent, or Firm* — Sterne, Kessler, Goldstein & Fox P.L.L.C.

(57) **ABSTRACT**

A network device may select a value of a multi-level transmit power control (TPC) command from a plurality of pre-defined values. The network device may transmit on a single channel an allocation of an uplink resource and the multi-level TPC command.

20 Claims, 4 Drawing Sheets

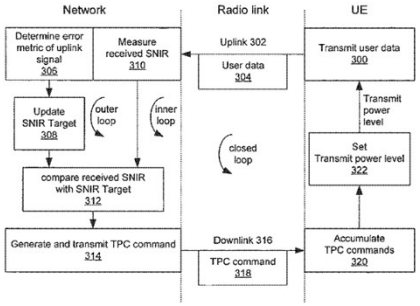

(12) **United States Patent**
Anderson

(10) **Patent No.: US 9,706,500 B2**
(45) **Date of Patent: *Jul. 11, 2017**

(54) **POWER CONTROL IN A WIRELESS NETWORK**

(71) Applicant: **Intellectual Ventures II LLC**, Wilmington, DE (US)

(72) Inventor: **Nicholas W. Anderson**, Exeter (GB)

(73) Assignee: **Intellectual Ventures II LLC**, Wilmington, DE (US)

(*) Notice: Subject to any disclaimer, the term of this patent is extended or adjusted under 35 U.S.C. 154(b) by 0 days.

This patent is subject to a terminal disclaimer.

(21) Appl. No.: **15/229,906**

(22) Filed: **Aug. 5, 2016**

(65) **Prior Publication Data**

US 2016/0345273 A1 Nov. 24, 2016

Related U.S. Application Data

(63) Continuation of application No. 14/713,719, filed on May 15, 2015, now Pat. No. 9,414,326, which is a

(Continued)

(51) **Int. Cl.**
H04B 7/00 (2006.01)
H04W 52/24 (2009.01)
H04W 52/06 (2009.01)
H04W 52/22 (2009.01)
H04W 72/04 (2009.01)
(Continued)

(52) **U.S. Cl.**
CPC ***H04W 52/242*** (2013.01); ***H04W 52/06*** (2013.01); ***H04W 52/221*** (2013.01); ***H04W 52/24*** (2013.01); ***H04W 52/241*** (2013.01); ***H04W 52/243*** (2013.01); ***H04W 72/0473*** (2013.01); ***H04W 72/1268*** (2013.01);
(Continued)

(58) **Field of Classification Search**
CPC ... H04W 52/242; H04W 52/06; H04W 52/08; H04W 52/10; H04W 52/12; H04W 52/221; H04W 52/24; H04W 52/243; H04W 52/241; H04W 72/0473; H04W 72/1268; H04W 72/1289
See application file for complete search history.

(56) **References Cited**

U.S. PATENT DOCUMENTS

5,257,283 A 10/1993 Gilhousen et al.
5,719,583 A 2/1998 Kanai
(Continued)

FOREIGN PATENT DOCUMENTS

CN 1159720 A 9/1997
CN 1343400 A 4/2002
(Continued)

OTHER PUBLICATIONS

"Recommendation ITU-R M.1225: Guidelines for Evaluation of Radio Transmission Technologies for IMT-2000," International Telecommunication Union/ITU Radiocommunication Sector, Jan. 1, 1997, Rec. ITU-R M.1225, pp. 1-61.
(Continued)

Primary Examiner — Dominic Rego
(74) *Attorney, Agent, or Firm* — Volpe and Koenig, P.C.

(57) **ABSTRACT**

A network device may select a value of a multi-level transmit power control (TPC) command from a set of values that indicate up amounts. The network device may transmit on a single physical channel an allocation of an uplink resource and the multi-level TPC command having the selected value.

22 Claims, 4 Drawing Sheets

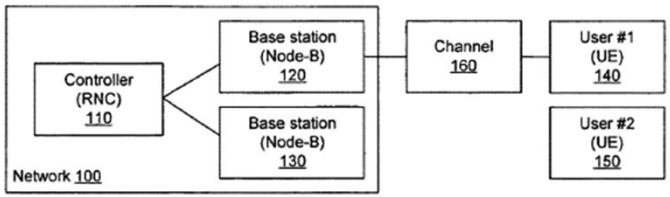

The ’153/500 Patents → combined open loop/closed loop

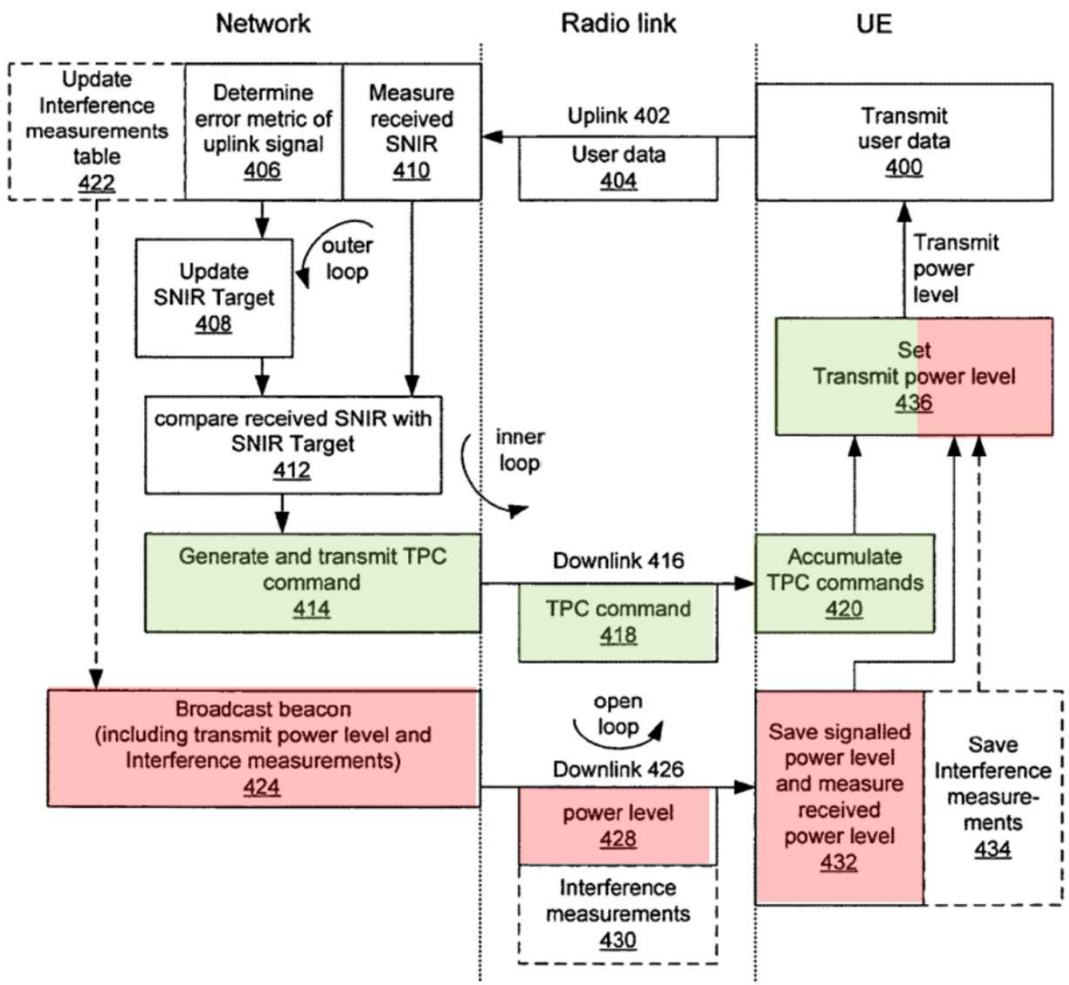

Ex.1001, Fig. 4 (annotated); Ex.1003, ¶48.

Ex.1001, FIG. 4; ’153 Petition, 9.

The disputed claim limitations

’153 Patent, claim 1

1. A user equipment (UE) comprising:
a transmitter;
a receiver; and
a processor operatively coupled to the transmitter and the receiver,
wherein the processor is configured to cause:
the receiver to receive, from a network device, an indication that transmit power control (TPC) command accumulation is enabled,
the receiver to receive, from the network device, on a single physical channel, scheduling information and power control information that includes a multi-level TPC command, and
the transmitter to transmit, to the network device, an uplink signal based on the received scheduling information and the multi-level TPC command.

’500 Patent, claim 11

11. A user equipment (UE) comprising:
a transmitter;
a receiver;
a processor operatively coupled to the transmitter and the receiver; and
the processor and the receiver are configured to receive, on a single physical channel, an allocation of an uplink resource and a multi-level transmit power control (TPC) command;
wherein the processor is further configured to determine a transmission power level based on a value of the multi-level TPC command out of a plurality of potential values for the multi-level TPC command;
wherein the plurality of potential values for the multi-level TPC command includes at least two values up or at least two values down; and
wherein the processor is configured to have the transmitter transmit an uplink signal on the allocated uplink resource at the determined transmission power level.

Overlapping IPR Grounds

’153 patent

Grounds	Claims	Basis (pre-AIA)
#1	1-2, 4-5, 11-12, 14-15	35 U.S.C. §103 over Andersson in view of Baker and Khan
#2	3, 13	§103 over Andersson in view of Baker, Khan, and Dick
#3	1-2, 4-5, 10-12, 14-15, 20	§103 over Zeira in view of Baker, Khan, and Tong
#4	3, 13	§103 over Zeira in view of Baker, Khan, Tong, and Dick

’500 patent

Grounds	Claims	Basis (pre-AIA)
#1	11, 15-17, 21-22	35 U.S.C. §103 over Andersson in view of Khan
#2	12-13, 18-19	§103 over Andersson in view of Khan and Baker
#3	14, 20	§103 over Andersson in view of Khan and Dick
#4	11, 15-17, 21-22	§103 over Zeira in view of Khan and Tong
#5	12-13, 18-19	§103 over Zeira in view of Khan, Tong, and Baker
#6	14, 20	§103 over Zeira in view of Khan, Tong, and Dick

Issue 1:

"receive…an indication that transmit power control (TPC) command accumulation is enabled"

('153 patent, claims 1 and 11)
('500 patent, claims 12 and 18)

Issue 1 summary:

- **Andersson Ground**:
  - PO alleges no "*indication*" because Baker's TPC command accumulation is "always enabled"
  - In fact, under any construction of "*accumulation*," Baker's PCA=2 disables TPC command accumulation

- **Zeira Ground**:
  - PO alleges no "network signal to toggle accumulation on/off"
  - In fact, in Zeira, network operator enables solely open loop power control, disabling TPC command accumulation
    - Baker illustrates it was obvious to use network signal

Claim construction of "*TPC command accumulation*"

'153 Patent

Thus, for the current frame k, the UE may calculate the transmit power $P_{Tx}(k)$ as shown below where K is the initial frame number determined when the power control process begins; TPCi is −1 for a down TPC command, +1 for an up TPC command and 0 if no TPC command is received; and step is the magnitude of the amount added to an accumulator upon receipt of each TPC command. The transmit power

Ex. 1001, 9:29-35; '153 Reply, 4; '153 Inst. Dec., 8.

Some embodiments provide a radio comprising: a receiver including an output to provide a measured received power level; an accumulator having an input for accepting step increase and decrease instructions and an output providing a sum of past step instructions; a power level setting

Ex. 1001, 3:39-43; '153 Reply, 5.

Claim construction of "*TPC command accumulation*"

'153 Patent

ing a pause in receipt of TPC commands. The UE may use the accumulated TPC commands

sum each TPC command

$$\sum_{i=k-K}^{k} TPC_i$$

Ex. 1001, 10:23-30; '153 POR, 7-8.

$$P_{Tx}(k)=P_{open}(k)+\text{step}\cdot\Sigma_{i=k-K}^{k}\text{TPC}_i+y_{SF}+\beta_{TFC}$$

Ex. 1001, 9:42; '153 POR, 7-8.

apply summed TPC commands

Claim construction of "*TPC command accumulation*"

Patent Owner Response

transient SNIR fluctuations. EX2006, ¶¶35-42. This evidence strongly supports PO's broader construction: "accumulation" refers to the process of collecting and summing TPC commands so that they cumulatively affect transmit power, regardless of whether the update occurs once per command, once per frame, or at another interval.

'153 POR, 17.

Claim construction of "*TPC command accumulation*"

Patent Owner's Expert

its transmit power—typically by a small, fixed step size, such as ±1 dB. Rather than adjusting the transmit power immediately and independently in response to each TPC command, the UE keeps a running tally of all the "up" and "down" commands. This process of summing these incremental adjustments over time is what the patent refers to as accumulation. In the context of the '153 Patent specification, TPC commands

Ex.2016, ¶43; '153 Reply, 5.

Claim construction of "*TPC command accumulation*"

Petitioner Reply

Accordingly, the intrinsic evidence, IV's arguments, and IV's expert's testimony all support construing *TPC command accumulation* as the magnitude of each TPC command adjustment cumulatively affecting transmission power.

'153 Reply, 6.

Andersson + Baker

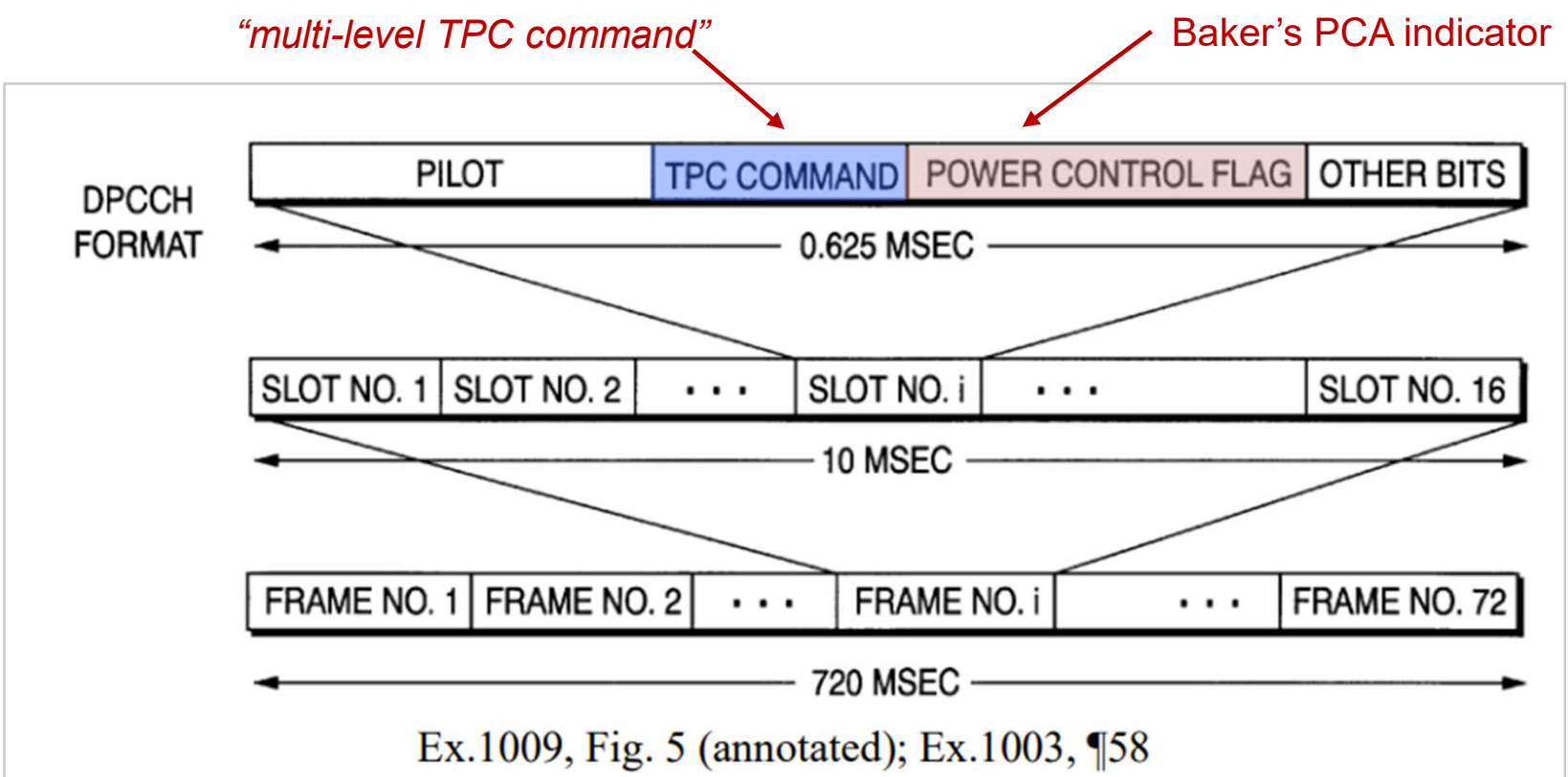

Ex.1009, Fig. 5 (annotated); Ex.1003, ¶58

Ex. 1009, FIG. 5; '153 Petition, 18, 37.

Baker (Ground 1)

PCA = *"indication that transmit power control (TPC) command accumulation is enabled"*

[0022] When the value of PCA is **1**, Δ_{TPC} can take a value of 1 or 2. If a received TPC command is "0" then the MS **110** reduces its transmission power by Δ_{TPC} dB, while if the received command is "1" the MS **110** increases its transmission power by Δ_{TPC} dB.

If PCA = 1, sum TPC commands

(TPC command accumulation enabled)

[0023] When the value of PCA is **2**, Δ_{TPC} can only take the value of 1 and the MS **110** combines TPC commands in groups of five. If all five TPC commands are "1" the transmission power is increased by Δ_{TPC} dB, if all five TPC commands are "0" the transmission power is decreased by Δ_{TPC} dB, otherwise the transmission power is unchanged. This method effectively emulates the use of a power control step size of approximately 0.2 dB, as disclosed in UK patent application 9915571.5 (our reference PHB 34358).

If PCA = 2, compare TPC commands

(TPC command accumulation disabled)

Ex.1010, [0022]-[0023]; '153 Petition, 35-36.

Zeira (Ground 3)

"(TPC) command accumulation"

UE transmit power

Closed loop factor

Open loop factor

$$P_{TS}=P_0+G(n)+\alpha L \qquad \text{Equation 4}$$

$$G(n)=G(n-1)+b_{TPC}\Delta_{TPC} \qquad \text{Equation 6}$$

Ex.1004, 6:1-20; '153 Petition, 55.

Previous closed loop factor

TPC command

Zeira (Ground 3)

"indication that transmit power control (TPC) command accumulation is enabled"

$$P_{TS}=P_0+G(n)+\alpha L \qquad \text{Equation 4}$$

Ex.1004, 6:1-20; '153 Petition, 56-57.

Although the two above algorithms only weighted the open loop factor, the weighting may be applied to the closed loop factor or both the open and closed loop factors. Under certain conditions, the network operator may desire to use solely open loop or solely closed loop power control. For example, the operator may use solely closed loop power control by setting α to zero.

Ex.1004, 7:16-22; '153 Petition, 56-57.

Zeira (Ground 3)

$$P_{TS}=P_0+G(n)+\alpha L \qquad \text{Equation 4}$$

Ex.1004, 6:1-20; '153 Petition, 56-57.

If α applied to G(n):

Value of α	Power control	TPC accumulation
0	Solely open loop	Disabled
≠ 0	Combined closed/open loop	Enabled

'153 Petition, 56-57.

Zeira + Baker (Ground 3)

*"**receiving** … an indication that transmit power control (TPC) command accumulation is enabled"*

Zeira

Although the two above algorithms only weighted the open loop factor, the weighting may be applied to the closed loop factor or both the open and closed loop factors. Under certain conditions, the network operator may desire to use solely open loop or solely closed loop power control. For example, the operator may use solely closed loop power control by setting α to zero.

Ex.1004, 7:16-22; '153 Petition, 56-57.

Baker

[0002] There are two basic types of communication required between a Base Station (BS) and a Mobile Station (MS) in a radio communication system. The first is user traffic, for example speech or packet data. The second is control information, required to set and monitor various parameters of the transmission channel to enable the BS and MS to exchange the required user traffic.

[0003] In many communication systems one of the functions of the control information is to enable power control.

Ex.1010, [0003], [0002]; '153 Petition, 58-59.

Issue 2:

"receive…on a single physical channel, scheduling information and power control information that includes a multi-level TPC command"

('153 patent, claims 1 and 11)
('500 patent, claims 11 and 17)

Issue 2 summary:

- **Both grounds**:
  - PO alleges no motivation to combine based on "incompatible" channels in references
  - In fact, combinations not based on physical incorporation
    - and these "incompatibilities" are based on mischaracterizations of the references

Khan

TPC and scheduling grant on "single physical channel"

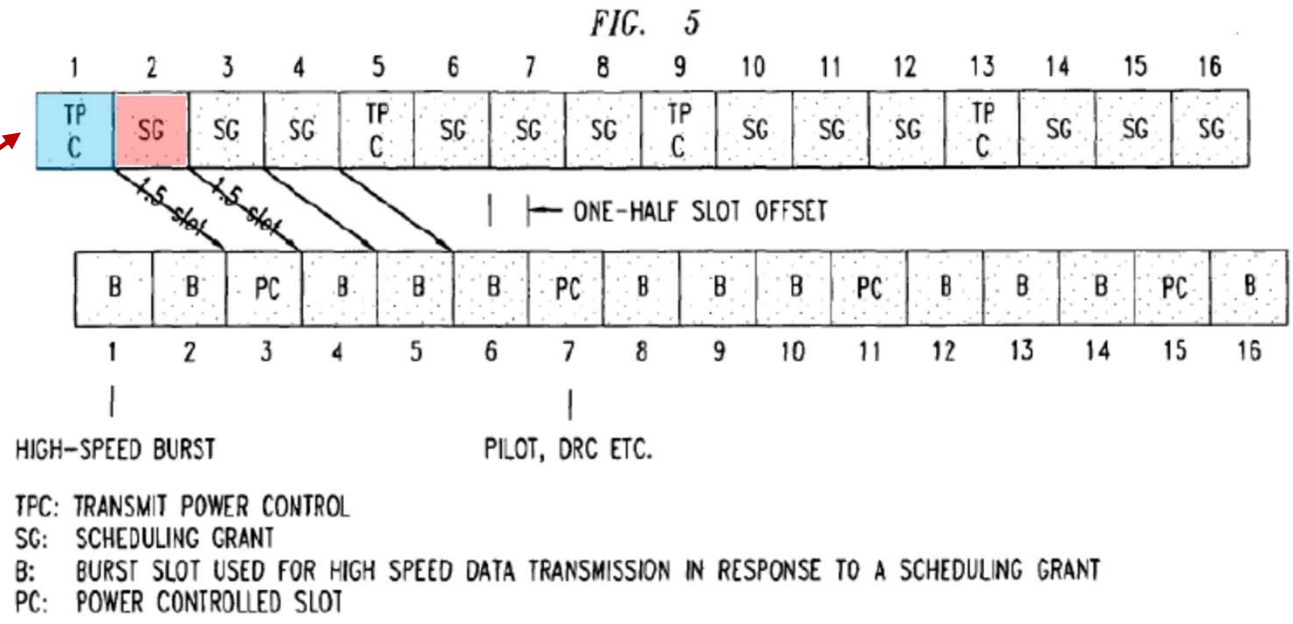

Ex.1005, Fig. 5 (annotated); Ex.1003, ¶100

Ex. 1005, FIG. 5; '153 Petition, 39.

IV agrees Khan transmits on same physical channel

Patent Owner Response

multiplexed structure, each downlink slot carries different information. As can be seen in FIG. 5, for example, TPCs are sent in slots 1, 5, 9 and 13 while scheduling grants are sent in slots 2-4, 6-8, 10-12 and 14-16. EX1005, FIG. 5. Accordingly, in this embodiment of Khan, TPCs and scheduling grants, while sent on the same shared physical channel using time multiplexing, are sent in separate slots. EX1005,

’153 POR, 26.

Andersson + Khan

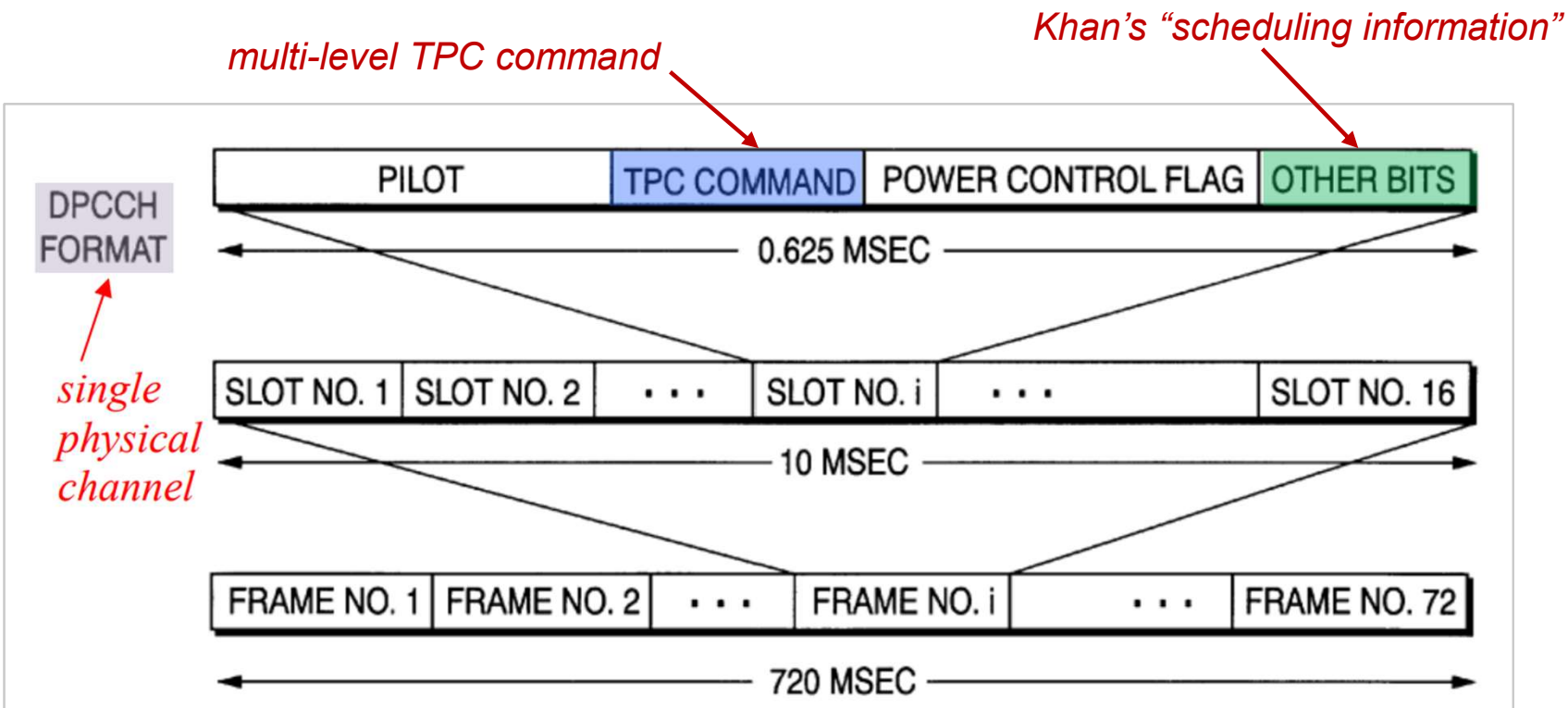

Ex.1009, Fig. 5 (annotated); Ex.1003, ¶95

Ex. 1009, FIG. 5; '153 Petition, 37.

Zeira + Khan

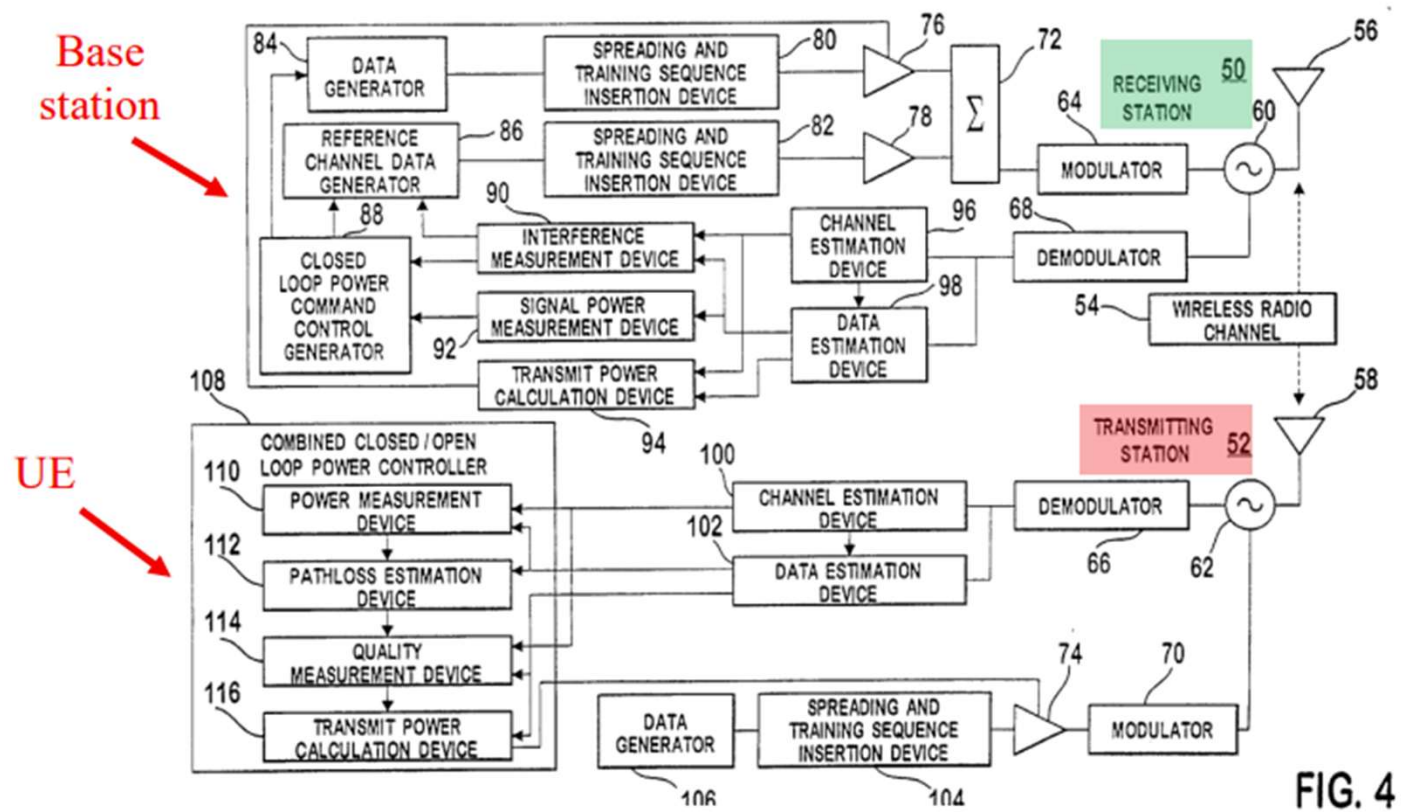

Ex.1004, Fig. 4 (annotated); Ex.1003, ¶125

Ex. 1004, Fig. 4; '153 Petition, 48.

TPC + scheduling info on *"single physical channel"*

channel. The closed loop power control command, b_{TPC}, is typically sent in a dedicated channel. The dedicated channel is dedicated to the communication between the receiving station **50** and transmitting station **52**, step **40**.

Ex. 1004, 4:27-30; '153 Petition, 63.

IV mischaracterizes the combination as physical incorporation

Patent Owner Response

Fig. 5. Because these channels operate with different multiplexing structures, combining them would not have been a predictable or natural design choice. EX2016,

’153 POR, 43, 60-61.

incompatible channel multiplexing structures. Thus, even if a POSITA happened upon Khan, in their search for a way to combine TPCs and fast scheduling grants on the same channel, the changes would not improve Andersson in the same way to achieve predictable results, but would have instead required a substantial re-design of the channels such that a POSITA would not have applied Khan’s teachings at all.

’153 POR, 39; *see also id*. at 61-62 (alleging Zeira re-design required).

IV's arguments are predicated on mischaracterizations

PO alleges Andersson is limited to "WCDMA"

transmissions). That assumption is wrong. During the relevant time period, dynamic per-TTI scheduling grants were not used to "schedule" UEs' uplink transmissions in WCDMA (UMTS/FDD), the underlying technology of the Andersson patent. EX2016, 62-63; EX2015, § 8.6. Instead, uplink transport channels were configured

'153 POR, 40.

EX1009, 7:3–10. Accordingly, Petitioner's premise, that Andersson's uplink transmissions imply fast per-TTI scheduling via downlink grants, is inconsistent with how WCDMA operated at the time, as explained by Dr. Lomp and confirmed by the WCDMA (UMTS/FDD) specifications. EX2016, ¶111.

'153 POR, 41.

Andersson is not limited to WCDMA

Andersson

A mobile radio cellular communications system **10** is shown in FIG. **1** and may be, for example, a CDMA or a wideband CDMA communications system. Radio network

Ex.1009, 7:16-18; '153 Reply, 15.

IV's expert

Q. …Does that sentence mean that the context of Andersson includes both CDMA and WCDMA?

A. I think that's a fair interpretation of the sentence.

Ex.1071, 52:15-53:8; '153 Reply, 15-16

Dr. Kotzin analyzed the combination under CDMA (not WCDMA)

capabilities. A POSITA would have thus naturally expected to be successful applying well-known signaling techniques such as Khan's—especially in view of Andersson's statement that it utilizes "***well-known CDMA techniques*** [] to distinguish between the various mobile station and base station communications." Andersson, 7:46-54. For example, with respect to an example implementation of

Ex.1003, ¶76; '153 Reply, 15

IV's arguments are predicated on mischaracterizations

PO alleges Zeira is limited to "UTRA-TDD in UMTS Release 99"

transmissions). That assumption is wrong. During the relevant time period, dynamic per-TTI scheduling grants were not used to "schedule" UEs' uplink transmissions in UMTS/TDD, the underlying technology of the Zeira patent. EX2016, 62-63;

'153 POR, 57.

described in Zeira. EX2016, ¶115, 152. Zeira is directed to UTRA-TDD in UMTS Release 99, where a dedicated channel is used to carry continuous TPC commands at Layer 1 in every time slot to maintain closed-loop power control. EX2016, ¶152.

'153 POR, 60.

Zeira is generally applicable to all TDD systems

This invention generally relates to spread spectrum time division duplex (TDD) communication systems. More particularly, the present invention relates to a system and method for controlling transmission power within TDD communication systems.

Ex.1004, 1:7-11; '153 Reply, 27.

Khan's technique is generally applicable to evolving wireless systems

[0033] In the evolving wireless data systems, the scheduling function in the forward link ("FL")—e.g., from the base station to wireless unit—may be moved from base station controller to base station in order to provide "fast" scheduling based on channel quality feedback from the users. Moreover, new technologies, such as adaptive modu-

[0034] Further evolution of 3G standards includes high-speed reverse link packet access from the wireless unit to base station. Most of the techniques used on the FL may also be used on the reverse link to improve the data rates and the system capacity. These techniques include fast scheduling, AMC and HARQ, for example.

[0035] In order to support the packet scheduling on the reverse link, a scheduling grant containing information about wireless unit identity and other control information needs to be sent on the FL. In the CDMA2000, a code-multiplexed control channel called Forward-Uplink Scheduling Channel (F-USCH) may carry a scheduling grant on the FL for the wireless unit(s) scheduled to transmit in the R-SCH (Reverse Supplemental Channel) frame. The FL

Ex.1005, [0033]-[0035]; '153 Petition, 39-40; '153 Reply, 27.

Motion to Strike

IV's Sur-Reply includes improper new argument

I. Petitioner does not establish the "allocation of an uplink resource" limitation because it never identifies a cognizable "allocation" tied to a specific "uplink resource" used for the recited transmission

Sur-Reply (Paper 19), 1

This gap is apparent in Ground 1.

Sur-Reply (Paper 19), 1

resource "on" which the UE transmits. Petition, 25; Reply, 8; POR, 44. Accordingly, even if Petitioner could overcome the separate "single physical channel" and "accumulation enabled" defects, Petitioner still fails, as a stand-alone matter, to establish the "allocation of an uplink resource" limitation on the present record.

Sur-Reply, 4-5

IV did not raise this alleged "gap" in the POR

A. Ground 1 – Claims 11, 15-17, and 21-22 Are Not Obvious Over Andersson and Khan Pursuant To 35 U.S.C. § 103 30

1. Andersson and Khan, Alone or in Combination, Do Not Disclose or Suggest "Receiv[ing], On a Single Physical Channel, an Allocation of an Uplink Resource and a Multi-Level Transmit Power Control (TPC) Command...," As Required By Claim 1 30

a) Motivation to Combine 31

1) In Andersson, and Its Base Technology, the UE's Dedicated Uplink Transport Channel Was Semi-Statically Configured Using RRC Signaling 33

2) The RRC Signaling Used to Configure the UE's Dedicated Uplink Transport Channel Was an RNC Function 34

3) Andersson and Khan Use Fundamentally Incompatible Channel Multiplexing Structures 36

b) Alleged Benefits of Petitioner's Proposed Combination 39

1) Larger Number of Active Wireless Units 40

2) Reduced Complexity 41

3) Reduced Latency 41

4) A POSITA Would Understand that Scheduling Information is Control Information that Naturally Belongs Within a Control Channel 42

POR, iii (Zeira/Khan arguments are similar)

The only POR/Reply cites are unrelated to the IV's new argument

POR, 44 (cited in 4 times in Section 1)

Andersson also teaches the concept of a power control indicator, which is a single bit appended to the TPC commands. The power control indicator itself, in

Reply, 8 (cited in 11 times in Section 1)

Petition, 19-22; Ex.1003, ¶¶62-65. In its Response, IV ignores this simple combination and instead directs its arguments to a strawman combination involving physical incorporation of Khan's communication channel into Andersson's system. Response, 33-39; Ex.1072, ¶38. IV further mischaracterizes the teachings of Andersson and Khan as being respectively limited to WCDMA and CDMA2000 HRPD in order to allege technical incompatibilities. Response,

IV's Opposition fails to identify where the alleged "allocation" gap was raised in the prior briefing

The Patent Owner Response (POR) explained that Ground 1 was deficient because Anderson and Khan failed to disclose "receiving, on a single physical channel, an allocation of an uplink resource and a multi-level transmit power control (TPC) command" because they "use *fundamentally incompatible channel multiplexing structures*" and the combination would have "*required a substantial re-design*." POR, 30-32 (emphasis added). As the Patent Owner Response stated:

Petitioner responded in the Reply (at 1, 8-9) by arguing that bodily incorporation is not required to establish obviousness, and Patent Owner properly countered in the Sur-Reply (at 3) that "Petitioner's Reply does not cure the 'allocation' defect." Even absent bodily incorporation, Petitioner still bears the

Opposition to Motion to Strike (Paper 24), 1-2

The Board should strike Section I of the Sur-Reply from the record

[W]here a reply clearly relies on a new theory not included in prior briefing, and where addressing this new theory during oral hearing would prejudice the opposing party, **striking the portion of the brief containing that theory may be appropriate**.

Trial Practice Guide, §II.K

Appendix

’153/500 no longer claim combined open loop/closed loop

’153 Patent, claim 11	’828 patent, claim 1
11. A method performed by a user equipment (UE) having a transmitter and a receiver, the method comprising: receiving, by the UE, an indication from a network device that transmit power control (TPC) command accumulation is enabled; receiving, by the UE on a single physical channel from the network device, scheduling information and power control information that includes a multi-level TPC command; and transmitting, by the UE to the network device, an uplink signal based on the received scheduling information and the multi-level TPC command.	1. A method performed by user equipment (UE), the method comprising: receiving, by the UE, an indication of whether accumulation of transmit power control (TPC) commands is enabled; determining, by the UE, a path loss of a downlink channel; receiving, on a single physical channel by the UE if accumulation is enabled, an allocation of a scheduled uplink resource and a TPC command, wherein the TPC command is accumulated with other received TPC commands; calculating, by the UE if accumulation is enabled, transmit power in association with an uplink communication based on both the path loss and the accumulated TPC commands; and receiving, on the single physical channel by the UE if accumulation is not enabled, an allocation of a scheduled uplink resource to transmit data at a power level calculated by the UE based on the path loss.

’153 Petition, 13-14

"indication that transmit power control (TPC) command accumulation is enabled"

Zeira

Although the two above algorithms only weighted the open loop factor, the weighting may be applied to the closed loop factor or both the open and closed loop factors. Under certain conditions, the network operator may desire to use solely open loop or solely closed loop power control. For example, the operator may use solely closed loop power control by setting α to zero.

Ex.1004, 7:16-22; '153 Petition, 56-57.

Patent Owner Response

1. Node-B Sends a Parameter to the UE, Instructing it to Enable Accumulation

The '153 Patent describes a parameter, configurable at a Node-B or RNC, that instructs a UE whether to set uplink power using path loss, TPC commands, or both. EX1001, 13:12-20. The parameter, sent via signaling or broadcast, may specify open-loop, closed-loop, or combined control. Id. Accumulation can be disabled

'153 POR, 7.

Claimed "*indication*" of TPC accumulation is broad

Claim language

wherein the processor is configured to cause:
the receiver to receive, from a network device, an indication that transmit power control (TPC) command accumulation is enabled.

'153 patent, claim 1

vs.

PO Sur-reply

that instructs the UE to change its behavior. The claim requires an indication—a specific command signal—that toggles the accumulation mode.

'153 Sur-Reply, 6

PO Response

Baker does not, however, make up for the deficiencies of Zeira, as set forth above, with respect to enabling TPC command accumulation, which is not disclosed or suggest by either reference. EX2016, ¶¶141-144.

'153 POR, 54

Andersson is not limited to WCDMA

Andersson

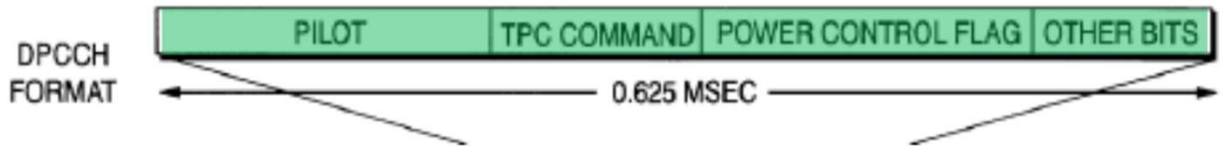

Ex.1009, Detail of FIG. 5 (annotated)

3GPP TS 25.211 Release 99 (WCDMA)

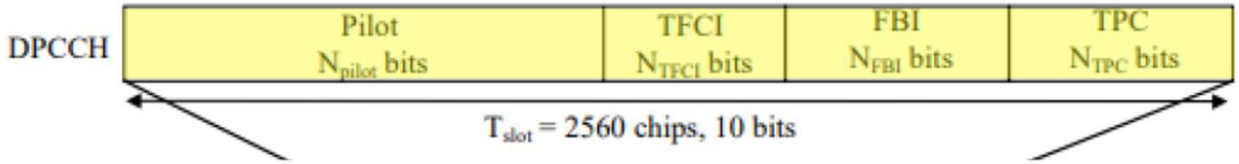

Ex.2014, Detail of FIG. 1 (annotated)

'153 Reply, 16-17

PO Response vs. Sur-Reply

Patent Owner Response

grants are sent in slots 2-4, 6-8, 10-12 and 14-16. EX1005, FIG. 5. Accordingly, in this embodiment of Khan, TPCs and scheduling grants, while sent on the same shared physical channel using time multiplexing, are sent in separate slots. EX1005,

'153 POR, 26.

Patent Owner Sur-reply

existing dedicated control channel. Petition, 31–32; Reply, 9–10. But under Patent Owner's construction, Petitioner cannot satisfy "on a single physical channel" by pointing to disclosures where the two required items are separated either (a) by different codes/covers or (b) by different time slots. POR, 16–17.

'500 Sur-reply, 12.

Claim construction of "*TPC command accumulation*"

Patent Owner Response

PO respectfully submits that the claim language "TPC command accumulation" should be construed to mean "adding a TPC command value to an integrator". PO believes this is consistent with "TPC commands cumulatively affect

'153 POR, 17.

Claim construction of "*TPC command accumulation*"

Patent Owner's Expert

Q. Okay. So what is an integrator?

A. In this context, it is a storage -- storage means, I guess, like a register. Everything is digital these days, so we usually talk about registers instead of analog components. I will do that here.

So there's a register which has a number in it. And when new inputs to that accumulator arrive, the input number is added to the contents of the register to create a new value. So the new value is equal to the old value, plus the increment that comes to the input.

Ex.1071, 40:2-13; '153 Reply, 10-11.

The Petition establishes that the "allocation" is tied to an "uplink resource" used for transmission

Andersson + Khan

Further, Andersson's mobile stations would transmit *an uplink signal based on the received scheduling information* because "[i]n a cellular communications system, a mobile radio station communicates over an ***assigned*** radio channel with a radio base station." Ex.1009, 1:12-14. Indeed, these aspects were well known to POSITAs as taught by Khan, for example. Khan describes "a wireless unit transmit[ting] a packet in the R-SCH frame on the RL [(reverse link)]," where "the **transmission of the packet is performed in response to a scheduling grant** message on the FL [(forward link)]." Ex.1005, [0036], [0003].

Petition, 41-42

The Petition establishes that the "allocation" is tied to an "uplink resource" used for transmission

Zeira + Khan

Second, Zeira's uplink signal is transmitted in "appropriate **time slots**." Ex.1004, 6:61-63. As is well-known, the particular time slot is based upon a received scheduling grant, as discussed above with respect to Khan in [1.3]. Ex.1003, ¶¶151-155,159. For example, Khan describes "transmitting a packet in response to receiving at least one scheduling grant." Ex.1005, [0015].

Petition, 68

Andersson

In FIG. **1**, two mobile stations **28** and **30** are shown communicating with plural base stations. Mobile station **28** communicates with base stations **16**, **18**, and **20**, and mobile station **30** communicates with base stations **20** and **22**. A control link between radio network controllers **12** and **14** permits diversity communications to/from mobile station **30** via base stations **20** and **22**. Each radio communication channel established between the mobile station and a base station has an uplink component and a downlink component. Since multiple communications utilize the same radio frequencies in CDMA communication, spreading codes along with other well-known CDMA techniques are used to distinguish between the various mobile station and base station communications. In this example embodiment, the term "channel" refers to a CDMA channel which, for any mobile station, is defined in terms of an RF frequency and a particular code sequence.

Ex.1009, 7:46-54; '153 Reply, 15