IN THE UNITED STATES DISTRICT COURT
FOR THE WESTERN DISTRICT OF TEXAS
WACO DIVISION

INTELLECTUAL VENTURES II LLC,	)	
	)	
Plaintiff,	)	
	)	C.A. No. 6:24-cv-00188
v.	)	
	)	
TESLA, INC.,	)	**JURY TRIAL DEMANDED**
	)	
Defendant.	)	
	)	

COMPLAINT FOR PATENT INFRINGEMENT

Plaintiff Intellectual Ventures II LLC ("Intellectual Ventures" or "Plaintiff"), in their Complaint of patent infringement against Defendant Tesla, Inc. ("Tesla" or "Defendant"), hereby alleges as follows:

NOTICE OF RELATED CASE

Intellectual Ventures respectfully informs the Court that the present case involves the infringement of multiple patents already in suit in the case styled as *Intellectual Ventures I LLC, et al. v. Volvo Car Corporation, et al.*, Case No. 6:23-cv-00429-ADA (the "429 Case") and the infringement of multiple patents related to the patents-in-suit in the 429 Case.

Specifically, the following patents asserted in this litigation overlap with the patents asserted in the 429 Case: United States Patent No. 10,292,138 ("the '138 Patent") and United States Patent No. 9,232,158 ("the '158 Patent"), (collectively "429 Related Patents").

In this case, Intellectual Ventures asserts two of the same patents that were previously filed in the Waco Division are currently being litigated in the 429 Case, although on a different set of infringing systems and methods, which will implicate overlapping questions of law and fact. The parties in the 429 Case are in the process of briefing claim construction in anticipation of the Court

in the Waco Division construing claims of each of the 429 Related Patents at a *Markman* hearing, currently set for May 24, 2024.

NATURE OF THE ACTION

1. This is a civil action for the infringement of United States Patent No. 7,336,805 ("the '805 Patent"), United States Patent No. 9,706,500 ("the '500 Patent"), United States Patent No. 10,292,138 ("the '138 Patent"), United States Patent No. 10,952,153 ("the '153 Patent"), United States Patent No. 8,898,395 ("the '395 Patent"), United States Patent No. 10,136,416 ("the '416 Patent"), United States Patent No. 7,916,180 ("the '180 Patent"), United States Patent No. 9,232,158 ("the '158 Patent"), United States Patent No. 7,181,743 ("the '743 Patent"), U.S. Patent No. 6,894,639 ("the '639 Patent"), United States Patent No. 11,206,670 ("the '670 Patent"), and United States Patent No. 11,664,889 ("the '889 Patent") (collectively, the "Patents-in-Suit") under the Patent Laws of the United States, 35 U.S.C. § 1 et seq.

THE PARTIES

Intellectual Ventures

2. Plaintiff Intellectual Ventures II LLC ("Intellectual Ventures II") is a Delaware limited liability company having its principal place of business located at 3150 139th Avenue SE, Bellevue, Washington 98005.

3. Intellectual Ventures II is the owner of all rights, title, and interest in and to the '805, '500, '138, '153, '395, '416, '180, '158, '639, '670 and '889 Patents.

4. Intellectual Ventures II is the exclusive licensee of the '743 Patent, and holds all substantial rights therein, including the right to grant licenses, to exclude others, and to enforce and recover past damages for infringement of the '743 Patent.

Tesla

5. Upon information and belief, Defendant Tesla, Inc. is a Delaware corporation with its principal place of business at 1 Tesla Road, Austin, Texas 78725. Tesla may be served with process through its registered agent, CT Corporation, at 1999 Bryan Street, Suite 900, Dallas, Texas 75201-3136. Tesla is registered to do business in the State of Texas and has been since at least 2011. On information and belief, Tesla does business in the State of Texas and the Western District of Texas.

6. Upon information and belief, Tesla designs, develops, makes, manufactures, uses, distributes, imports, provides, markets, offers for sale, and/or sells in the State of Texas and the Western District of Texas automotive vehicles and components thereof ("Accused Products") that infringe the Patents-in-Suit, contribute to the infringement by others, and/or induces others to commit acts of patent infringement in the State of Texas and the Western District of Texas in connection with the Accused Products.

7. On information and belief, Tesla has derived substantial revenue from infringing acts in the Western District of Texas, including from the sale and use of the Accused Products as described in more detail below.

JURISDICTION AND VENUE

8. This is an action for patent infringement arising under the patent laws of the United States. This Court has subject matter jurisdiction pursuant to 28 U.S.C. §§ 1331 and 1338(a).

9. This Court has personal jurisdiction over Tesla because Tesla conducts business in and has committed acts of patent infringement, contributed to infringement by others, and/or induced others to commit acts of patent infringement in this District, the State of Texas, and elsewhere in the United States and has established minimum contacts with this forum state such

that the exercise of jurisdiction over Tesla would not offend the traditional notions of fair play and substantial justice. Upon information and belief, Tesla transacts substantial business with entities and individuals in the State of Texas and the Western District of Texas, by, among other things, importing, distributing, offering to sell, and selling products that infringe the Patents-in-Suit, including the infringing automotive vehicles and components thereof that Tesla purposefully directs into the State of Texas and this District as alleged herein, as well as by providing service and support to its customers in this District. Tesla places the accused automotive vehicles and components thereof into the stream of commerce with the knowledge and expectation that they will be sold in the State of Texas, including this District.

10. Tesla is subject to this Court's general and specific jurisdiction pursuant to due process and/or the Texas Long Arm Statute due at least to Tesla's substantial business in the State of Texas and this District, including maintaining its principal place of business at 1 Tesla Road, Austin, Texas 78725, through its past infringing activities, because Tesla regularly does and solicits business herein, and/or because Tesla has engaged in persistent conduct and/or has derived substantial revenues from goods and services provided to customers in the State of Texas and this District

11. Venue is proper in this District pursuant to 28 U.S.C. §§ 1391(b)-(c) and 1400(b). For example, venue is proper in this District under 28 U.S.C. § 1400(b) because Tesla maintains its principal place of business at 1 Tesla Road, Austin, Texas 78725 in this District, and has committed acts of patent infringement in this District and/or have contributed to or induced acts of patent infringement by others in this District. In addition to its corporate headquarters at 1 Tesla Road, Austin, Texas 78725, Tesla also maintains several permanent physical places within this District from which it conducts business relating to the Accused Products. For example, Tesla has

stores and service centers in this District at least at the following locations: 500 E St Elmo Road, Austin, Texas 78745; 12845 Research Boulevard, Austin, Texas 78759; 11600 Century Oaks Terrace, Suite 123, Austin, Texas 78758; 7825 Helen of Troy Drive, El Paso, Texas 79912; 5865 E Hwy 290 Fredericksburg, Texas 78624; 23011 IH-10 West, San Antonio, Texas 78257; and 8320-8434 Airport Boulevard, San Antonio, Texas 78216.

12. Tesla is "at home" in this District, see *Daimler AG v. Bauman*, 571 U.S. 117, 127-30 (2014), because Tesla has admitted that its principal place of business is in this District. *See Sare v. Tesla, Inc., et al*., No. 2:22-cv-00547-JAM-CKD, 2022 WL 2817422, at *2 (E.D. Cal. July 19, 2022). ("Defendant contends that it officially moved its global headquarters from Palo Alto, California to Austin, Texas on December 1, 2021, over two months before this action was filed… Defendant has met its burden of demonstrating through competent evidence that at the time this suit was filed, Tesla's principal place of business was in Austin, Texas, as that is where its high level officers directed, controlled, and coordinated the corporation's activities") (internal citations omitted). Tesla also manufactures the Accused Products within the Western District of Texas. For example, Tesla manufactures its Model Y cars and Cybertrucks at its Gigafactory Texas plant located at 1 Tesla Road, Austin, Texas 78725 in the Western District of Texas.[1]

13. Tesla placed and/or contributed to placing the Accused Products into the stream of commerce knowing or understanding that such Accused Products would be imported into, sold, provided, distributed, and/or used in the United States, including in the Western District of Texas.

14. The Austin Division is an appropriate venue for this case because, pursuant to Fed. R. Civ. P. 11(b)(3), Tesla has its headquarters in this division at 1 Tesla Road, Austin, TX 78725

[1] https://www.tesla.com/giga-texas ("Covering 2,500 acres along the Colorado River with over 10 million square feet of factory floor, Gigafactory Texas is a U.S. manufacturing hub for Model Y and the home of Cybertruck.") (last accessed April 10, 2024).

and Tesla manufactures in this division the Accused Products, including the Model Y and Cybertruck vehicles.

15. Upon information and belief, in December 2022 and January 2023 Tesla filed plans with the Texas Department of Licensing and Regulation to begin construction in 2023 of six additional campuses in Austin, Texas.[2] Tesla plans to spend more than $800 million to construct approximately 1.7 million square feet of additional space at these campuses.[3]

FACTUAL BACKGROUND

16. Intellectual Ventures Management, LLC ("Intellectual Ventures Management") was founded in 2000. Since then, Intellectual Ventures Management has been involved in the business of inventing. Intellectual Ventures Management facilitates invention by inventors and the filing of patent applications for those inventions, collaboration with others to develop and patent inventions, and the acquisition and licensing of patents from individual inventors, universities, corporations, and other institutions. A significant aspect of Intellectual Ventures Management's business is managing the Plaintiff in this case, Intellectual Ventures II.

17. One of the founders of Intellectual Ventures Management is Nathan Myhrvold, who worked at Microsoft from 1986 until 2000 in a variety of executive positions, culminating in his appointment as the company's first Chief Technology Officer ("CTO") in 1996. While at Microsoft, Dr. Myhrvold founded Microsoft Research in 1991 and was one of the world's foremost software experts. Between 1986 and 2000, Microsoft became the world's largest technology company.

---

[2] https://austin.culturemap.com/news/city-life/tesla-s-austin-headquarters-files-for-800-million-campus-expansion/ (last accessed April 8, 2024).
[3] *Id*.

18. Under Dr. Myhrvold's leadership, Intellectual Ventures acquired more than 70,000 patents covering many important inventions of the Internet era. Many of these inventions coincided with Dr. Myhrvold's successful tenure at Microsoft.

19. One of the most significant accomplishments of the Internet era is the emergence of wireless technologies for vehicles. Wireless connectivity systems in vehicles enable communication channels within vehicles as well as with other external networks. Intellectual Ventures' Patents-In-Suit provide improvements to wireless communications used in vehicles.

20. According to its Form 10-K for the year ending December 31, 2022, Tesla asserts: "We design, develop, manufacture, sell and lease high-performance fully electric vehicles and energy generation and storage systems, and offer services related to our products. We generally sell our products directly to customers, and continue to grow our customer-facing infrastructure through a global network of vehicle service centers, Mobile Service, body shops, Supercharger stations and Destination Chargers to accelerate the widespread adoption of our products."[4]

21. Tesla provides several types of wireless communication system solutions and services to its customers. Tesla's product offerings include but are not limited to Standard Connectivity, Premium Connectivity, and infotainment systems, including connectivity features over Wi-Fi, maps and navigation and music streaming over Bluetooth®.[5] With Premium Connectivity, users have access to all connectivity features over cellular, in addition to Wi-Fi. Tesla markets and sells these wireless communication system solutions and services in several Tesla models throughout the world, including in the United States and Texas, as shown below:

---

[4] https://www.sec.gov/Archives/edgar/data/1318605/000095017023001409/tsla-20221231.htm#business (Tesla, Inc. Form 10-K, p. 4) (last accessed April 10, 2024).
[5] https://www.tesla.com/support/connectivity (last accessed April 10, 2024).

Connectivity

Connectivity is an important part of all Tesla vehicles, further enhancing the driving experience by providing access to features that require data usage — including streaming music and media, live traffic visualization and more.

All Tesla vehicles come with access to Standard Connectivity. Standard Connectivity is included in your vehicle, at no additional cost, for eight years beginning on the first day your vehicle was delivered as new by Tesla or the first day it is put into service (for example, used as a demonstrator or service vehicle), whichever comes first. If you are purchasing a used vehicle, you will be notified of how long your vehicle will include access to Standard Connectivity. With Standard Connectivity, you have access to most connectivity features over Wi-Fi, in addition to basic maps and navigation and music streaming over Bluetooth®.

Premium Connectivity provides the ability to access all connectivity features over cellular, in addition to Wi-Fi, for the most intuitive and engaging ownership experience. Premium Connectivity is currently available as a monthly subscription of $9.99 plus applicable tax or as an annual subscription of $99 plus applicable tax and can be purchased at any time from your vehicle touchscreen or the Tesla app. Orders of Model S, Model X, Model Y, Model 3 and future variants of Cybertruck will receive a Premium Connectivity trial at delivery.

If you own a Tesla vehicle for personal use, you can subscribe to Premium Connectivity from your vehicle touchscreen or the Tesla app. If you are driving a company vehicle, contact your vehicle provider for more information.

Ex. 1, https://www.tesla.com/support/connectivity (last accessed April 10, 2024).

Connectivity Packages

Connectivity Packages	Standard	Premium
Navigation	✓	✓
Live Traffic Visualization		✓
Sentry Mode - View Live Camera		✓
Satellite-View Maps		✓
Video Streaming**		✓
Caraoke*		✓
Music Streaming**		✓
Internet Browser*		✓

Features subject to change and may vary based on hardware configuration
*Currently available over Wi-Fi for Standard Connectivity
**A paid subscription to streaming services is required to access music and media streaming

For Model S, Model X and Cybertruck with second row display, this includes second row in-drive video streaming. Some features, such as Caraoke and video streaming, are not supported on some vehicles based on hardware configuration. Review your vehicle firmware release notes to confirm feature availability for your vehicle.

Ex. 1, https://www.tesla.com/support/connectivity (last accessed April 10, 2024).

Does Standard Connectivity include in-car maps and navigation functionality?

Yes. All vehicles with Standard Connectivity will continue to receive the same core maps & navigation functionality as vehicles with Premium Connectivity, including traffic-based routing, Trip Planner and Supercharger stall availability. Standard Connectivity is included in your vehicle, at no additional cost, for eight years beginning on the first day your vehicle was delivered as new by Tesla or the first day it is put into service (for example, used as a demonstrator or service vehicle), whichever comes first. If you are purchasing a used vehicle, you will be notified of how long your vehicle will include access to Standard Connectivity. Premium Connectivity will add satellite-view maps and live traffic visualization.

Ex. 1, https://www.tesla.com/support/connectivity (last accessed April 10, 2024).

What music & media are available with Standard Connectivity?

Standard Connectivity offers Bluetooth® pairing, FM radio, Sirius XM capability in North America (for XM-enabled and configured vehicles) and playback from a USB drive.

Premium Connectivity is required for in-car streaming music & media over cellular.

A paid subscription to third-party streaming services is required to access music and media streaming for both Standard and Premium Connectivity.

Ex. 1, https://www.tesla.com/support/connectivity (last accessed April 10, 2024).

Mobile App

The Tesla mobile app allows you to communicate with Model 3 remotely using your iPhone® or Android™ phone.

To Use the Mobile App

To set up the Tesla mobile app to communicate with your Model 3:

1. Download the Tesla mobile app to your phone.
2. Log in to the Tesla mobile app by entering your Tesla account credentials.
3. Enable mobile access to your Model 3 by touching **Controls > Safety > Allow Mobile Access**.
4. Turn your phone's Bluetooth setting **ON** and ensure that Bluetooth is turned on within your phone's global settings for the Tesla mobile app. For example, on your phone, navigate to Settings, choose the Tesla mobile app, and ensure the Bluetooth setting is enabled.

Your phone and vehicle must both be actively connected to cellular service or Wi-Fi for the mobile app to communicate with your vehicle. Tesla recommends that you always have a functional physical key readily available if parking in an area with limited or absent cellular service, such as an indoor parking garage.

Ex. 2, https://www.tesla.com/ownersmanual/model3/en_us/GUID-F6E2CD5E-F226-4167-AC48-BD021D1FFDAB.html (last accessed April 10, 2024).

Overview

When both your phone and the vehicle have internet service, the Tesla mobile app's home screen allows you to:

- Lock or unlock your vehicle.
- Enable or disable the heating or air conditioning and monitor the cabin climate.
- Check your vehicle's charging information. Charging details also appear when a charging cable is plugged in.
- Open or close the charge port.

- See where your vehicle is located.
- View your vehicle's estimated range.
- Open the front trunk.
- View your vehicle's odometer, VIN, and current software version.

Media settings appear on the mobile app to pause, play, rewind, fast forward, and adjust the volume of the media currently playing in the vehicle. You may need to enable Media settings by touching **Audio Settings > Options > Allow Mobile Control**.

For supported video sources, send videos to Tesla Theater by sharing the link through the mobile app. Navigate to the movie, show, or video you want to play on your phone and touch the share button. Share the video with the Tesla app and it appears on the touchscreen if Model 3 is in Park.

Ex. 2, https://www.tesla.com/ownersmanual/model3/en_us/GUID-F6E2CD5E-F226-4167-AC48-BD021D1FFDAB.html (last accessed April 10, 2024).

22. Tesla also provides an Autopilot feature that it describes as an advanced driver assistance system to enhance safety and convenience for the driver and to reduce the overall workload of the driver.[6] Each new Tesla vehicle is equipped with multiple external cameras and powerful vision processing to provide an additional layer of safety. Tesla markets and sells these autopilot features in Tesla models throughout the world, including in the United States and Texas, as shown below:

[6] https://www.tesla.com/support/autopilot (last accessed April 10, 2024).

Autopilot and Full Self-Driving Capability

Autopilot is an advanced driver assistance system that enhances safety and convenience behind the wheel. When used properly, Autopilot reduces your overall workload as a driver. Each new Tesla vehicle is equipped with multiple external cameras and powerful vision processing to provide an additional layer of safety. All vehicles built for the North American market now use our camera-based Tesla Vision to deliver Autopilot features, rather than radar.

Autopilot comes standard on every new Tesla. For owners who took delivery of their vehicle without Autopilot, there are multiple packages available for purchase, depending on when your vehicle was built: Autopilot, Enhanced Autopilot and Full Self-Driving Capability.

Autopilot, Enhanced Autopilot and Full Self-Driving Capability are intended for use with a fully attentive driver, who has their hands on the wheel and is prepared to take over at any moment. While these features are designed to become more capable over time, the currently enabled features do not make the vehicle autonomous.

Ex. 3, https://www.tesla.com/support/autopilot (last accessed April 10, 2024).

Autopilot

Autopilot includes the following functionality and features:

- **Traffic-Aware Cruise Control:** Matches the speed of your vehicle to that of the surrounding traffic
- **Autosteer:** Assists in steering within a clearly marked lane, and uses traffic-aware cruise control

Ex. 3, https://www.tesla.com/support/autopilot (last accessed April 10, 2024).

Enhanced Autopilot

In addition to the functionality and features of Autopilot, Enhanced Autopilot also includes:

- **Navigate on Autopilot:** Actively guides your vehicle from a highway's on-ramp to off-ramp, including suggesting lane changes, navigating interchanges, automatically engaging the turn signal and taking the correct exit.
- **Auto Lane Change:** Assists in moving to an adjacent lane on the highway when Autosteer is engaged.
- **Autopark:** Helps automatically parallel or perpendicular park your vehicle, with a single touch.
- **Summon:** Moves your vehicle in and out of a tight space using the mobile app or key.
- **Smart Summon:** Your vehicle will navigate more complex environments and parking spaces, maneuvering around objects as necessary to come find you in a parking lot.

Ex. 3, https://www.tesla.com/support/autopilot (last accessed April 10, 2024).

Full Self-Driving Capability

Your vehicle will be able to drive itself almost anywhere with minimal driver intervention and will continuously improve. In addition to the functionality and features of Autopilot and Enhanced Autopilot, Full Self-Driving Capability also includes:

- **Autosteer on City Streets**
- **Traffic and Stop Sign Control:** Identifies stop signs and traffic lights and automatically slows your vehicle to a stop on approach, with your active supervision

The currently enabled Autopilot, Enhanced Autopilot and Full Self-Driving features require active driver supervision and do not make the vehicle autonomous. Full autonomy will be dependent on achieving reliability far in excess of human drivers as demonstrated by billions of miles of experience, as well as regulatory approval, which may take longer in some jurisdictions. As Tesla's Autopilot, Enhanced Autopilot and Full Self-Driving capabilities evolve, your vehicle will be continuously upgraded through over-the-air software updates.

Ex. 3, https://www.tesla.com/support/autopilot (last accessed April 10, 2024).

Your Model 3 includes the following Autopilot components that actively monitor the surrounding roadway:

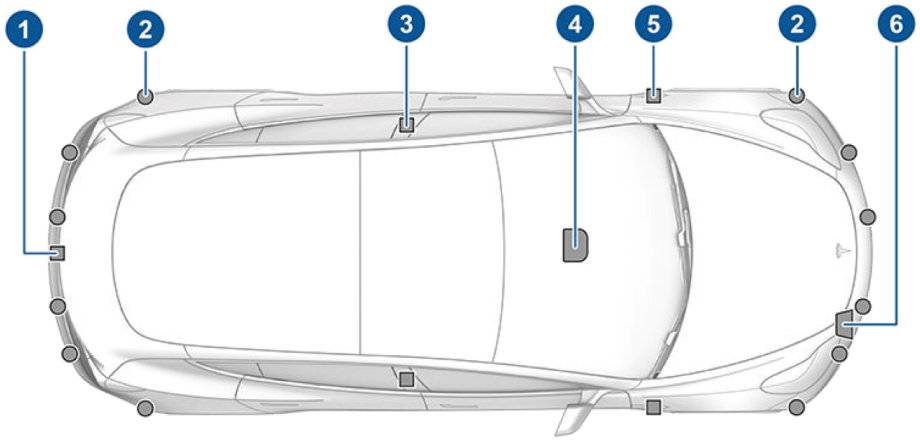

1. A camera is mounted above the rear license plate.
2. Ultrasonic sensors are located in the front and rear bumpers.
3. A camera is mounted in each door pillar.
4. Three cameras are mounted to the windshield above the rear view mirror.
5. A camera is mounted to each front fender.
6. Radar is mounted behind the front bumper.

Ex. 4, https://www.greencarreports.com/news/1137379_tesla-bets-on-camera-sensing-drops-ultrasonic-sensors-pauses-features (last accessed April 10, 2024).

Your Model 3 includes the following components that actively monitor the surrounding area:

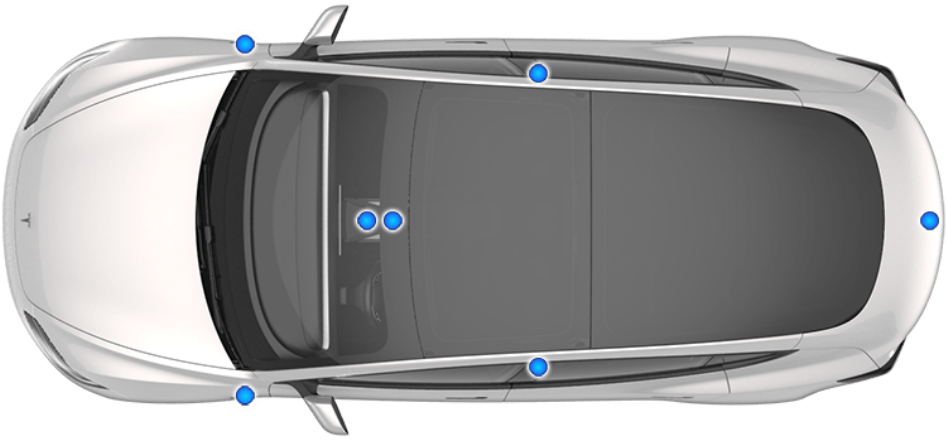

- A camera is mounted above the rear license plate.
- A camera is mounted in each door pillar.
- Two cameras are mounted to the windshield above the rear view mirror.
- A camera is mounted to each front fender.

Model 3 is also equipped with high precision electronically-assisted braking and steering systems.

Ex. 5, https://www.tesla.com/ownersmanual/model3/en_us/GUID-682FF4A7-D083-4C95-925A-5EE3752F4865.html (last accessed April 10, 2024).

How does Autopilot work?
Built on a deep neural network, Autopilot uses cameras, ultrasonic sensors and radar to see and sense the environment around the car. This robust sensor and camera suite provides drivers with an awareness of their surroundings that a driver alone would not otherwise have. A powerful onboard computer processes these inputs in a matter of milliseconds to help make your driving safer and less stressful.

Ex. 6, https://www.tesla.com/support/autopilot#capability-features (last accessed April 10, 2024).

How does Autopilot work?
As of mid-February 2022, all vehicles built for the North American market will feature Tesla Vision, which uses multiple cameras and powerful neural net processing to see the environment around the vehicle and deliver Autopilot features. This camera suite provides occupants with an awareness of their surroundings that a driver alone would not otherwise have. A powerful onboard computer processes these inputs in a matter of milliseconds to help make driving safer and less stressful.

Ex. 6, https://www.tesla.com/support/autopilot#capability-features (last accessed April 10, 2024).

Every few milliseconds, new input frames are received through a dedicated image signal processor where they get preprocessed before being stored in the DRAM. Once new frames are available in the main memory, the CPUs instruct the NNA accelerators to start processing them. The accelerators control the data and parameters streaming into their local SRAM, as well as the results streaming back to the DRAM. Once the corresponding result frames have been sent out to the DRAM, the accelerators trigger an interrupt back to the CPU complex. The GPU is available for any postprocessing

Source: Compute Solution for Tesla's Full Self-Driving Computer, Autopilot Hardware, Tesla, Feb 2020.

THE PATENTS-IN-SUIT

United States Patent No. 7,336,805

23. On February 26, 2008, the PTO issued the '805 Patent, titled "Docking Assistant." The '805 Patent is valid and enforceable. A copy of the '805 Patent is attached as Exhibit 7.

24. Intellectual Ventures II is the owner of all rights, title, and interest in and to the '805 Patent, and holds all substantial rights therein, including the right to grant licenses, to exclude others, and to enforce and recover past damages for infringement of the '805 Patent.

United States Patent No. 9,706,500

25. On July 11, 2017, the PTO issued the '500 Patent, titled "Power Control in a Wireless Network." The '500 Patent is valid and enforceable. A copy of the '500 Patent is attached as Exhibit 8.

26. Intellectual Ventures II is the owner of all rights, title, and interest in and to the '500 Patent, and holds all substantial rights therein, including the right to grant licenses, to exclude others, and to enforce and recover past damages for infringement of the '500 Patent.

United States Patent No. 10,292,138

27. On May 14, 2019, the PTO issued the ’138 Patent, titled “Determining Buffer Occupancy and Selecting Data for Transmission on a Radio Bearer.” The ’138 Patent is valid and enforceable. A copy of the ’138 Patent is attached as Exhibit 9.

28. Intellectual Ventures II is the owner of all rights, title, and interest in and to the ’138 Patent, and holds all substantial rights therein, including the right to grant licenses, to exclude others, and to enforce and recover past damages for infringement of the ’138 Patent.

United States Patent No. 10,952,153

29. On March 16, 2021, the PTO issued the ’153 Patent, titled “Power Control in a Wireless Network.” The ’153 Patent is valid and enforceable. A copy of the ’153 Patent is attached as Exhibit 10.

30. Intellectual Ventures II is the owner of all rights, title, and interest in and to the ’153 Patent, and holds all substantial rights therein, including the right to grant licenses, to exclude others, and to enforce and recover past damages for infringement of the ’153 Patent.

United States Patent No. 8,898,395

31. On November 25, 2014, the PTO issued the ’395 Patent, titled “Memory Management for Cache Consistency.” The ’395 Patent is valid and enforceable. A copy of the ’395 Patent is attached as Exhibit 11.

32. Intellectual Ventures II is the owner of all rights, title, and interest in and to the ’395 Patent, and holds all substantial rights therein, including the right to grant licenses, to exclude others, and to enforce and recover past damages for infringement of the ’395 Patent.

United States Patent No. 10,136,416

33. On November 20, 2018, the PTO issued the ’416 Patent, titled “Communicating on a Shared Channel in a Wireless Network.” The ’416 Patent is valid and enforceable. A copy of the ’416 Patent is attached as Exhibit 12.

34. Intellectual Ventures II is the owner of all rights, title, and interest in and to the ’416 Patent, and holds all substantial rights therein, including the right to grant licenses, to exclude others, and to enforce and recover past damages for infringement of the ’416 Patent.

United States Patent No. 7,916,180

35. On March 29, 2011, the PTO issued the ’180 Patent, titled “Simultaneous Multiple Field of View Digital Cameras.” The ’180 Patent is valid and enforceable. A copy of the ’180 Patent is attached as Exhibit 13.

36. Intellectual Ventures II is the owner of all rights, title, and interest in and to the ’180 Patent, and holds all substantial rights therein, including the right to grant licenses, to exclude others, and to enforce and recover past damages for infringement of the ’180 Patent.

United States Patent No. 9,232,158

37. On January 5, 2016, the PTO issued the ’158 Patent, titled “Large Dynamic Range Cameras.” The ’158 Patent is valid and enforceable. A copy of the ’158 Patent is attached as Exhibit 14.

38. Intellectual Ventures II is the owner of all rights, title, and interest in and to the ’158 Patent, and holds all substantial rights therein, including the right to grant licenses, to exclude others, and to enforce and recover past damages for infringement of the ’158 Patent.

United States Patent No. 7,181,743

39. On February 20, 2007, the PTO issued the ’743 Patent, titled “Resource Allocation Decision Function for Resource Management Architecture and Corresponding Programs Therefor.” The ’743 Patent is valid and enforceable. A copy of the ’743 Patent is attached as Exhibit 15.

40. Intellectual Ventures II is the exclusive licensee of the ’743 Patent, and holds all substantial rights therein, including the right to grant licenses, to exclude others, and to enforce and recover past damages for infringement of the ’743 Patent.

United States Patent No. 6,894,639

41. On May 17, 2005, the PTO issued the ’639 Patent, titled “Generalized Hebbian Learning for Principal Component Analysis and Automatic Target Recognition, Systems and Method.” The ’639 Patent is valid and enforceable. A copy of the ’639 Patent is attached as Exhibit 16.

42. Intellectual Ventures II is the owner of all rights, title, and interest in and to the ’639 Patent, and holds all substantial rights therein, including the right to grant licenses, to exclude others, and to enforce and recover past damages for infringement of the ’639 Patent.

United States Patent No. 11,206,670

43. On December 21, 2021, the PTO issued the ’670 Patent, titled “Communication in a Wireless Network Using Restricted Bandwidths.” The ’670 Patent is valid and enforceable. A copy of the ’670 Patent is attached as Exhibit 17.

44. Intellectual Ventures II is the owner of all rights, title, and interest in and to the ’670 Patent, and holds all substantial rights therein, including the right to grant licenses, to exclude others, and to enforce and recover past damages for infringement of the ’670 Patent.

45. On May 30, 2023, the PTO issued the ’889 Patent, titled “Communications in a Wireless Network.” The ’889 Patent is valid and enforceable. A copy of the ’889 Patent is attached as Exhibit 18.

46. Intellectual Ventures II is the owner of all rights, title, and interest in and to the ’889 Patent, and holds all substantial rights therein, including the right to grant licenses, to exclude others, and to enforce and recover past damages for infringement of the ’889 Patent.

COUNT I

(Tesla’s Infringement of U.S. Patent No. 7,336,805)

47. Paragraphs 1 through 46 are incorporated by reference as if fully set forth herein.

48. **Direct Infringement.** Defendant directly infringed, and continues to directly infringe, literally and/or by the doctrine of equivalents, individually and/or jointly, the ’805 Patent, by designing, developing, making, manufacturing, utilizing, distributing, providing, testing, selling, and/or offering for sale and/or importing into the United States the Accused Products that infringe the ’805 Patent including, but not limited to, Tesla automotive vehicles, and all past, current and future Tesla products that operate in the same or substantially similar manner as the specifically identified products and components (collectively, “Example Count I Automotive Vehicles”). The Accused Products identified in the example charts incorporated in Example Count I Automotive Vehicles infringe at least the exemplary claims of the ’805 Patent identified in the charts incorporated into this Count I (the “Example ’805 Patent Claims”) literally and/or by the doctrine of equivalents.

49. On information and belief, Defendant has also infringed and continues to directly infringe, literally and/or under the doctrine of equivalents, the Exemplary ’805 Patent Claims, by internal testing and use of the Example Count I Automotive Vehicles.

50. **Willful Blindness.** Defendant knew of the ’805 Patent, or should have known of the ’805 Patent, but was willfully blind to its existence. Defendant has had actual knowledge of the ’805 Patent not later than receipt of a letter, dated August 7, 2020, and received on the same date. Defendant also has had actual knowledge of the ’805 Patent not later than receipt of a letter, dated April 11, 2024, and received on the same date. By the time of trial, Defendant will have known and intended (since receiving such notice) that its continued actions would infringe and actively induce and contribute to the infringement of one or more claims of the ’805 Patent. *See* Exhibits 19 & 20.

51. **Induced Infringement.** Defendant has also induced, and continues to induce, the infringement of the ’805 Patent by others – including, but not limited to, inducing their consumers, partners, vendors, and/or third parties to use their Accused Products, such as Example Count I Automotive Vehicles, in an infringing manner as described above, including encouraging and instructing their consumers, partners, vendors, and/or third parties to infringe the ’805 Patent.

52. Defendant therefore actively, knowingly, and intentionally has committed, and continues to commit, affirmative acts that cause infringement, literally and/or by the doctrine of equivalents, of one or more claims of the ’805 Patent with knowledge of the ’805 Patent and knowledge that the induced acts constitute infringement of one or more claims of the ’805 Patent. Defendant has actively induced others, including, but not limited to, consumers, partners, vendors, and/or third parties, who use the Example Count I Automotive Vehicles to infringe the ’805 Patent, literally and/or by the doctrine of equivalents, throughout the United States, including within this District, by, among other things, advertising, promoting, and instructing the infringing use of the Example Count I Automotive Vehicles.

53. **Contributory Infringement.** Defendant actively, knowingly, and intentionally has committed, and continues to commit contributory infringement, literally and/or by the doctrine of equivalents, by, *inter alia,* knowingly providing software and technologies that when used, cause the direct infringement of one or more claims of the ’805 Patent by their consumers, partners, vendors, and/or third parties, and which have no substantial non-infringing uses, or include a separate and distinct technology that is especially made or especially adapted for use in infringement of the ’805 Patent, and is not a staple article or commodity of commerce suitable for substantial non-infringing use.

54. Defendant therefore actively, knowingly, and intentionally has been and continues to materially contribute to their consumers’, partners’, vendors’, and/or third-parties’ infringement of the ’805 Patent, literally and/or by the doctrine of equivalents, by designing, developing, making, manufacturing, utilizing, distributing, providing, testing, selling, and/or offering for sale and/or importing into the United States the Example Count I Automotive Vehicles for use in a manner that infringes one or more claims of the ’805 Patent. Example Count I Automotive Vehicles are especially made or adapted for infringing the ’805 Patent and have no substantial non-infringing use.

55. Exhibit 21 (claim charts) includes the Example Count I Automotive Vehicles and Example ’805 Patent Claims. As set forth in these charts, the Example Count I Automotive Vehicles practice the technology claimed by the ’805 Patent. Accordingly, the Example Count I Automotive Vehicles incorporated in these charts satisfy all elements of the Example ’805 Patent Claims.

56. Intellectual Ventures therefore incorporates by reference in its allegations herein the claim charts of Exhibit 21.

57. Intellectual Ventures is entitled to recover damages adequate to compensate for Defendant's infringement of the '805 Patent and will continue to be damaged by such infringement. Intellectual Ventures is entitled to recover damages from Defendant to compensate them for Defendant's infringement, as alleged above, in an amount measured by no less than a reasonable royalty under 35 U.S.C. § 284, as well as enhanced damages pursuant to 35 U.S.C. § 284.

58. Further, Defendant's infringement of Intellectual Ventures's rights under the '805 Patent will continue to damage Intellectual Ventures's business, causing irreparable harm for which there is no adequate remedy at law, unless enjoined by the Court.

59. As a result of Defendant's acts of infringement, Plaintiff has suffered and will continue to suffer damages in an amount to be proven at trial.

COUNT II

(Tesla's Infringement of U.S. Patent No. 11,206,670)

60. Paragraphs 1 through 59 are incorporated by reference as if fully set forth herein.

61. **Direct Infringement.** Defendant directly infringed, and continues to directly infringe, literally and/or by the doctrine of equivalents, individually and/or jointly, the '670 Patent, by designing, developing, making, manufacturing, utilizing, distributing, providing, testing, selling, and/or offering for sale and/or importing into the United States the Accused Products that infringe the '670 Patent including, but not limited to, Tesla automotive vehicles, and all past, current and future Tesla products that operate in the same or substantially similar manner as the specifically identified products and components (collectively, "Example Count II Automotive Vehicles"). The Accused Products identified in the example charts incorporated in Example Count II Automotive Vehicles infringe at least the exemplary claims of the '670 Patent identified

in the charts incorporated into this Count II (the "Example '670 Patent Claims") literally and/or by the doctrine of equivalents.

62. On information and belief, Defendant has also infringed and continues to directly infringe, literally and/or under the doctrine of equivalents, the Exemplary '670 Patent Claims, by internal testing and use of the Example Count II Automotive Vehicles.

63. **Willful Blindness.** Defendant knew of the '670 Patent, or should have known of the '670 Patent, but was willfully blind to its existence. Defendant has had actual knowledge of the '670 Patent not later than receipt of a letter, dated April 11, 2024, and received on the same date. By the time of trial, Defendant will have known and intended (since receiving such notice) that its continued actions would infringe and actively induce and contribute to the infringement of one or more claims of the '670 Patent. *See* Exhibit 20.

64. **Induced Infringement.** Defendant has also induced, and continues to induce, the infringement of the '670 Patent by others – including, but not limited to, inducing their consumers, partners, vendors, and/or third parties to use their Accused Products, such as Example Count II Automotive Vehicles, in an infringing manner as described above, including encouraging and instructing their consumers, partners, vendors, and/or third parties to infringe the '670 Patent.

65. Defendant therefore actively, knowingly, and intentionally has committed, and continues to commit, affirmative acts that cause infringement, literally and/or by the doctrine of equivalents, of one or more claims of the '670 Patent with knowledge of the '670 Patent and knowledge that the induced acts constitute infringement of one or more claims of the '670 Patent. Defendant has actively induced others, including, but not limited to, consumers, partners, vendors, and/or third parties, who use the Example Count II Automotive Vehicles to infringe the '670 Patent, literally and/or by the doctrine of equivalents, throughout the United States, including

within this District, by, among other things, advertising, promoting, and instructing the infringing use of the Example Count II Automotive Vehicles.

66. **Contributory Infringement.** Defendant actively, knowingly, and intentionally has committed, and continues to commit contributory infringement, literally and/or by the doctrine of equivalents, by, *inter alia,* knowingly providing software and technologies that when used, cause the direct infringement of one or more claims of the ’670 Patent by their consumers, partners, vendors, and/or third parties, and which have no substantial non-infringing uses, or include a separate and distinct technology that is especially made or especially adapted for use in infringement of the ’670 Patent, and is not a staple article or commodity of commerce suitable for substantial non-infringing use.

67. Defendant therefore actively, knowingly, and intentionally has been and continues to materially contribute to their consumers’, partners’, vendors’, and/or third-parties’ infringement of the ’670 Patent, literally and/or by the doctrine of equivalents, by designing, developing, making, manufacturing, utilizing, distributing, providing, testing, selling, and/or offering for sale and/or importing into the United States the Example Count II Automotive Vehicles for use in a manner that infringes one or more claims of the ’670 Patent. Example Count II Automotive Vehicles are especially made or adapted for infringing the ’670 Patent and have no substantial non-infringing use.

68. Exhibit 22 (claim charts) includes the Example Count II Automotive Vehicles and Example ’670 Patent Claims. As set forth in these charts, the Example Count II Automotive Vehicles practice the technology claimed by the ’670 Patent. Accordingly, the Example Count II Automotive Vehicles incorporated in these charts satisfy all elements of the Example ’670 Patent Claims.

69. Intellectual Ventures therefore incorporates by reference in its allegations herein the claim charts of Exhibit 22.

70. Intellectual Ventures is entitled to recover damages adequate to compensate for Defendant's infringement of the '670 Patent and will continue to be damaged by such infringement. Intellectual Ventures is entitled to recover damages from Defendant to compensate them for Defendant's infringement, as alleged above, in an amount measured by no less than a reasonable royalty under 35 U.S.C. § 284, as well as enhanced damages pursuant to 35 U.S.C. § 284.

71. Further, Defendant's infringement of Intellectual Ventures's rights under the '670 Patent will continue to damage Intellectual Ventures's business, causing irreparable harm for which there is no adequate remedy at law, unless enjoined by the Court.

72. As a result of Defendant's acts of infringement, Plaintiff has suffered and will continue to suffer damages in an amount to be proven at trial.

COUNT III

(Tesla's Infringement of U.S. Patent No. 11,664,889)

73. Paragraphs 1 through 72 are incorporated by reference as if fully set forth herein.

74. **Direct Infringement.** Defendant directly infringed, and continues to directly infringe, literally and/or by the doctrine of equivalents, individually and/or jointly, the '889 Patent, by designing, developing, making, manufacturing, utilizing, distributing, providing, testing, selling, and/or offering for sale and/or importing into the United States the Accused Products that infringe the '889 Patent including, but not limited to, Tesla automotive vehicles, and all past, current and future Tesla products that operate in the same or substantially similar manner as the specifically identified products and components (collectively, "Example Count III Automotive Vehicles"). The Accused Products identified in the example charts incorporated in Example

Count III Automotive Vehicles infringe at least the exemplary claims of the ’889 Patent identified in the charts incorporated into this Count III (the “Example ’889 Patent Claims”) literally and/or by the doctrine of equivalents.

75. On information and belief, Defendant has also infringed and continues to directly infringe, literally and/or under the doctrine of equivalents, the Exemplary ’889 Patent Claims, by internal testing and use of the Example Count III Automotive Vehicles.

76. **Willful Blindness.** Defendant knew of the ’889 Patent, or should have known of the ’889 Patent, but was willfully blind to its existence. Defendant has had actual knowledge of the ’889 Patent not later than receipt of a letter, dated April 11, 2024, and received on the same date. By the time of trial, Defendant will have known and intended (since receiving such notice) that its continued actions would infringe and actively induce and contribute to the infringement of one or more claims of the ’889 Patent. *See* Exhibit 20.

77. **Induced Infringement.** Defendant has also induced, and continues to induce, the infringement of the ’889 Patent by others – including, but not limited to, inducing their consumers, partners, vendors, and/or third parties to use their Accused Products, such as Example Count III Automotive Vehicles, in an infringing manner as described above, including encouraging and instructing their consumers, partners, vendors, and/or third parties to infringe the ’889 Patent.

78. Defendant therefore actively, knowingly, and intentionally has committed, and continues to commit, affirmative acts that cause infringement, literally and/or by the doctrine of equivalents, of one or more claims of the ’889 Patent with knowledge of the ’889 Patent and knowledge that the induced acts constitute infringement of one or more claims of the ’889 Patent. Defendant has actively induced others, including, but not limited to, consumers, partners, vendors, and/or third parties, who use the Example Count III Automotive Vehicles to infringe the

’889 Patent, literally and/or by the doctrine of equivalents, throughout the United States, including within this District, by, among other things, advertising, promoting, and instructing the infringing use of the Example Count III Automotive Vehicles.

79. **Contributory Infringement.** Defendant actively, knowingly, and intentionally has committed, and continues to commit contributory infringement, literally and/or by the doctrine of equivalents, by, *inter alia,* knowingly providing software and technologies that when used, cause the direct infringement of one or more claims of the ’889 Patent by their consumers, partners, vendors, and/or third parties, and which have no substantial non-infringing uses, or include a separate and distinct technology that is especially made or especially adapted for use in infringement of the ’889 Patent, and is not a staple article or commodity of commerce suitable for substantial non-infringing use.

80. Defendant therefore actively, knowingly, and intentionally has been and continues to materially contribute to their consumers’, partners’, vendors’, and/or third-parties’ infringement of the ’889 Patent, literally and/or by the doctrine of equivalents, by designing, developing, making, manufacturing, utilizing, distributing, providing, testing, selling, and/or offering for sale and/or importing into the United States the Example Count III Automotive Vehicles for use in a manner that infringes one or more claims of the ’889 Patent. Example Count III Automotive Vehicles are especially made or adapted for infringing the ’889 Patent and have no substantial non-infringing use.

81. Exhibit 23 (claim charts) includes the Example Count III Automotive Vehicles and Example ’889 Patent Claims. As set forth in these charts, the Example Count III Automotive Vehicles practice the technology claimed by the ’889 Patent. Accordingly, the Example Count III

Automotive Vehicles incorporated in these charts satisfy all elements of the Example ’889 Patent Claims.

82. Intellectual Ventures therefore incorporates by reference in its allegations herein the claim charts of Exhibit 23.

83. Intellectual Ventures is entitled to recover damages adequate to compensate for Defendant’s infringement of the ’889 Patent and will continue to be damaged by such infringement. Intellectual Ventures is entitled to recover damages from Defendant to compensate them for Defendant’s infringement, as alleged above, in an amount measured by no less than a reasonable royalty under 35 U.S.C. § 284, as well as enhanced damages pursuant to 35 U.S.C. § 284.

84. Further, Defendant’s infringement of Intellectual Ventures’s rights under the ’889 Patent will continue to damage Intellectual Ventures’s business, causing irreparable harm for which there is no adequate remedy at law, unless enjoined by the Court.

85. As a result of Defendant’s acts of infringement, Plaintiff has suffered and will continue to suffer damages in an amount to be proven at trial.

COUNT IV

(Tesla’s Infringement of U.S. Patent No. 9,706,500)

86. Paragraphs 1 through 85 are incorporated by reference as if fully set forth herein.

87. **Direct Infringement.** Defendant directly infringed, and continues to directly infringe, literally and/or by the doctrine of equivalents, individually and/or jointly, the ’500 Patent, by designing, developing, making, manufacturing, utilizing, distributing, providing, testing, selling, and/or offering for sale and/or importing into the United States the Accused Products that infringe the ’500 Patent including, but not limited to, Tesla automotive vehicles, and all past, current and future Tesla products that operate in the same or substantially similar manner as the

specifically identified products and components (collectively, "Example Count IV Automotive Vehicles"). The Accused Products identified in the example charts incorporated in Example Count IV Automotive Vehicles infringe at least the exemplary claims of the '500 Patent identified in the charts incorporated into this Count IV (the "Example '500 Patent Claims") literally and/or by the doctrine of equivalents.

88. On information and belief, Defendant has also infringed and continues to directly infringe, literally and/or under the doctrine of equivalents, the Exemplary '500 Patent Claims, by internal testing and use of the Example Count IV Automotive Vehicles.

89. **Willful Blindness.** Defendant knew of the '500 Patent, or should have known of the '500 Patent, but was willfully blind to its existence. Defendant has had actual knowledge of the '500 Patent not later than receipt of a letter, dated April 11, 2024, and received on the same date. By the time of trial, Defendant will have known and intended (since receiving such notice) that their continued actions would infringe and actively induce and contribute to the infringement of one or more claims of the '500 Patent. *See* Exhibits 19 & 20.

90. **Induced Infringement.** Defendant has also induced, and continues to induce, the infringement of the '500 Patent by others – including, but not limited to, inducing their consumers, partners, vendors, and/or third parties to use their Accused Products, such as Example Count IV Automotive Vehicles, in an infringing manner as described above, including encouraging and instructing their consumers, partners, vendors, and/or third parties to infringe the '500 Patent.

91. Defendant therefore actively, knowingly, and intentionally has committed, and continues to commit, affirmative acts that cause infringement, literally and/or by the doctrine of equivalents, of one or more claims of the '500 Patent with knowledge of the '500 Patent and knowledge that the induced acts constitute infringement of one or more claims of the '500 Patent.

Defendant has actively induced others, including, but not limited to, consumers, partners, vendors, and/or third parties, who use the Example Count IV Automotive Vehicles to infringe the ’500 Patent, literally and/or by the doctrine of equivalents, throughout the United States, including within this District, by, among other things, advertising, promoting, and instructing the infringing use of the Example Count IV Automotive Vehicles.

92. **Contributory Infringement.** Defendant actively, knowingly, and intentionally has committed, and continues to commit contributory infringement, literally and/or by the doctrine of equivalents, by, *inter alia,* knowingly providing software and technologies that when used, cause the direct infringement of one or more claims of the ’500 Patent by their consumers, partners, vendors, and/or third parties, and which have no substantial non-infringing uses, or include a separate and distinct technology that is especially made or especially adapted for use in infringement of the ’500 Patent, and is not a staple article or commodity of commerce suitable for substantial non-infringing use.

93. Defendant therefore actively, knowingly, and intentionally has been and continues to materially contribute to their consumers’, partners’, vendors’, and/or third-parties’ infringement of the ’500 Patent, literally and/or by the doctrine of equivalents, by designing, developing, making, manufacturing, utilizing, distributing, providing, testing, selling, and/or offering for sale and/or importing into the United States the Example Count IV Automotive Vehicles for use in a manner that infringes one or more claims of the ’500 Patent. Example Count IV Automotive Vehicles are especially made or adapted for infringing the ’500 Patent and have no substantial non-infringing use.

94. Exhibit 24 (claim charts) includes the Example Count IV Automotive Vehicles and Example ’500 Patent Claims. As set forth in these charts, the Example Count IV Automotive

Vehicles practice the technology claimed by the ’500 Patent. Accordingly, the Example Count IV Automotive Vehicles incorporated in these charts satisfy all elements of the Example ’500 Patent Claims.

95. Intellectual Ventures therefore incorporates by reference in its allegations herein the claim charts of Exhibit 24.

96. Intellectual Ventures is entitled to recover damages adequate to compensate for Defendant’s infringement of the ’500 Patent and will continue to be damaged by such infringement. Intellectual Ventures is entitled to recover damages from Defendant to compensate them for Defendant’s infringement, as alleged above, in an amount measured by no less than a reasonable royalty under 35 U.S.C. § 284, as well as enhanced damages pursuant to 35 U.S.C. § 284.

97. Further, Defendant’s infringement of Intellectual Ventures’s rights under the ’500 Patent will continue to damage Intellectual Ventures’s business, causing irreparable harm for which there is no adequate remedy at law, unless enjoined by the Court.

98. As a result of Defendant’s acts of infringement, Plaintiff has suffered and will continue to suffer damages in an amount to be proven at trial.

COUNT V

(Tesla’s Infringement of U.S. Patent No. 10,292,138)

99. Paragraphs 1 through 98 are incorporated by reference as if fully set forth herein.

100. **Direct Infringement.** Defendant directly infringed, and continues to directly infringe, literally and/or by the doctrine of equivalents, individually and/or jointly, the ’138 Patent, by designing, developing, making, manufacturing, utilizing, distributing, providing, testing, selling, and/or offering for sale and/or importing into the United States the Accused Products that infringe the ’138 Patent including, but not limited to, Tesla automotive vehicles, and all past,

current and future Tesla products that operate in the same or substantially similar manner as the specifically identified products and components (collectively, "Example Count V Automotive Vehicles"). The Accused Products identified in the example charts incorporated in Example Count V Automotive Vehicles infringe at least the exemplary claims of the '138 Patent identified in the charts incorporated into this Count V (the "Example '138 Patent Claims") literally and/or by the doctrine of equivalents.

101. On information and belief, Defendant has also infringed and continues to directly infringe, literally and/or under the doctrine of equivalents, the Exemplary '138 Patent Claims, by internal testing and use of the Example Count V Automotive Vehicles.

102. **Willful Blindness.** Defendant knew of the '138 Patent, or should have known of the '138 Patent, but was willfully blind to its existence. Defendant has had actual knowledge of the '138 Patent not later than receipt of a letter, dated April 11, 2024, and received on the same date. By the time of trial, Defendant will have known and intended (since receiving such notice) that its continued actions would infringe and actively induce and contribute to the infringement of one or more claims of the '138 Patent. *See* Exhibit 20.

103. **Induced Infringement.** Defendant has also induced, and continues to induce, the infringement of the '138 Patent by others – including, but not limited to, inducing their consumers, partners, vendors, and/or third parties to use their Accused Products, such as Example Count V Automotive Vehicles, in an infringing manner as described above, including encouraging and instructing their consumers, partners, vendors, and/or third parties to infringe the '138 Patent.

104. Defendant therefore actively, knowingly, and intentionally has committed, and continues to commit, affirmative acts that cause infringement, literally and/or by the doctrine of equivalents, of one or more claims of the '138 Patent with knowledge of the '138 Patent and

knowledge that the induced acts constitute infringement of one or more claims of the ’138 Patent. Defendant has actively induced others, including, but not limited to, consumers, partners, vendors, and/or third parties, who use the Example Count V Automotive Vehicles to infringe the ’138 Patent, literally and/or by the doctrine of equivalents, throughout the United States, including within this District, by, among other things, advertising, promoting, and instructing the infringing use of the Example Count V Automotive Vehicles.

105. **Contributory Infringement.** Defendant actively, knowingly, and intentionally has committed, and continues to commit contributory infringement, literally and/or by the doctrine of equivalents, by, *inter alia,* knowingly providing software and technologies that when used, cause the direct infringement of one or more claims of the ’138 Patent by their consumers, partners, vendors, and/or third parties, and which have no substantial non-infringing uses, or include a separate and distinct technology that is especially made or especially adapted for use in infringement of the ’138 Patent, and is not a staple article or commodity of commerce suitable for substantial non-infringing use.

106. Defendant therefore actively, knowingly, and intentionally has been and continues to materially contribute to their consumers’, partners’, vendors’, and/or third-parties’ infringement of the ’138 Patent, literally and/or by the doctrine of equivalents, by designing, developing, making, manufacturing, utilizing, distributing, providing, testing, selling, and/or offering for sale and/or importing into the United States the Example Count V Automotive Vehicles for use in a manner that infringes one or more claims of the ’138 Patent. Example Count V Automotive Vehicles are especially made or adapted for infringing the ’138 Patent and have no substantial non-infringing use.

107. Exhibit 25 (claim charts) includes the Example Count V Automotive Vehicles and Example ’138 Patent Claims. As set forth in these charts, the Example Count V Automotive Vehicles practice the technology claimed by the ’138 Patent. Accordingly, the Example Count V Automotive Vehicles incorporated in these charts satisfy all elements of the Example ’138 Patent Claims.

108. Intellectual Ventures therefore incorporates by reference in its allegations herein the claim charts of Exhibit 25.

109. Intellectual Ventures is entitled to recover damages adequate to compensate for Defendant’s infringement of the ’138 Patent and will continue to be damaged by such infringement. Intellectual Ventures is entitled to recover damages from Defendant to compensate them for Defendant’s infringement, as alleged above, in an amount measured by no less than a reasonable royalty under 35 U.S.C. § 284, as well as enhanced damages pursuant to 35 U.S.C. § 284.

110. Further, Defendant’s infringement of Intellectual Ventures’s rights under the ’138 Patent will continue to damage Intellectual Ventures’s business, causing irreparable harm for which there is no adequate remedy at law, unless enjoined by the Court.

111. As a result of Defendant’s acts of infringement, Plaintiff has suffered and will continue to suffer damages in an amount to be proven at trial.

COUNT VI

(Tesla’s Infringement of U.S. Patent No. 10,952,153)

112. Paragraphs 1 through 111 are incorporated by reference as if fully set forth herein.

113. **Direct Infringement.** Defendant directly infringed, and continues to directly infringe, literally and/or by the doctrine of equivalents, individually and/or jointly, the ’153 Patent, by designing, developing, making, manufacturing, utilizing, distributing, providing, testing,

selling, and/or offering for sale and/or importing into the United States the Accused Products that infringe the ’153 Patent including, but not limited to, Tesla automotive vehicles, and all past, current and future Tesla products that operate in the same or substantially similar manner as the specifically identified products and components (collectively, “Example Count VI Automotive Vehicles”). The Accused Products identified in the example charts incorporated in Example Count VI Automotive Vehicles infringe at least the exemplary claims of the ’153 Patent identified in the charts incorporated into this Count VI (the “Example ’153 Patent Claims”) literally and/or by the doctrine of equivalents.

114. On information and belief, Defendant has also infringed and continues to directly infringe, literally and/or under the doctrine of equivalents, the Exemplary ’153 Patent Claims, by internal testing and use of the Example Count VI Automotive Vehicles.

115. **Willful Blindness.** Defendant knew of the ’153 Patent, or should have known of the ’153 Patent, but was willfully blind to its existence. Defendant has had actual knowledge of the ’153 Patent not later than receipt of a letter, dated April 11, 2024, and received on the same date. By the time of trial, Defendant will have known and intended (since receiving such notice) that its continued actions would infringe and actively induce and contribute to the infringement of one or more claims of the ’153 Patent. *See* Exhibit 20.

116. **Induced Infringement.** Defendant has also induced, and continues to induce, the infringement of the ’153 Patent by others – including, but not limited to, inducing their consumers, partners, vendors, and/or third parties to use their Accused Products, such as Example Count VI Automotive Vehicles, in an infringing manner as described above, including encouraging and instructing their consumers, partners, vendors, and/or third parties to infringe the ’153 Patent.

117. Defendant therefore actively, knowingly, and intentionally has committed, and continues to commit, affirmative acts that cause infringement, literally and/or by the doctrine of equivalents, of one or more claims of the ’153 Patent with knowledge of the ’153 Patent and knowledge that the induced acts constitute infringement of one or more claims of the ’153 Patent. Defendant has actively induced others, including, but not limited to, consumers, partners, vendors, and/or third parties, who use the Example Count VI Automotive Vehicles to infringe the ’153 Patent, literally and/or by the doctrine of equivalents, throughout the United States, including within this District, by, among other things, advertising, promoting, and instructing the infringing use of the Example Count VI Automotive Vehicles.

118. **Contributory Infringement.** Defendant actively, knowingly, and intentionally has committed, and continues to commit contributory infringement, literally and/or by the doctrine of equivalents, by, *inter alia,* knowingly providing software and technologies that when used, cause the direct infringement of one or more claims of the ’153 Patent by their consumers, partners, vendors, and/or third parties, and which have no substantial non-infringing uses, or include a separate and distinct technology that is especially made or especially adapted for use in infringement of the ’153 Patent, and is not a staple article or commodity of commerce suitable for substantial non-infringing use.

119. Defendant therefore actively, knowingly, and intentionally has been and continues to materially contribute to their consumers’, partners’, vendors’, and/or third-parties’ infringement of the ’153 Patent, literally and/or by the doctrine of equivalents, by designing, developing, making, manufacturing, utilizing, distributing, providing, testing, selling, and/or offering for sale and/or importing into the United States the Example Count VI Automotive Vehicles for use in a manner that infringes one or more claims of the ’153 Patent. Example Count VI Automotive

Vehicles are especially made or adapted for infringing the ’153 Patent and have no substantial non-infringing use.

120. Exhibit 26 (claim charts) includes the Example Count VI Automotive Vehicles and Example ’153 Patent Claims. As set forth in these charts, the Example Count VI Automotive Vehicles practice the technology claimed by the ’153 Patent. Accordingly, the Example Count VI Automotive Vehicles incorporated in these charts satisfy all elements of the Example ’153 Patent Claims.

121. Intellectual Ventures therefore incorporates by reference in its allegations herein the claim charts of Exhibit 26.

122. Intellectual Ventures is entitled to recover damages adequate to compensate for Defendant’s infringement of the ’153 Patent and will continue to be damaged by such infringement. Intellectual Ventures is entitled to recover damages from Defendant to compensate them for Defendant’s infringement, as alleged above, in an amount measured by no less than a reasonable royalty under 35 U.S.C. § 284, as well as enhanced damages pursuant to 35 U.S.C. § 284.

123. Further, Defendant’s infringement of Intellectual Ventures’s rights under the ’153 Patent will continue to damage Intellectual Ventures’s business, causing irreparable harm for which there is no adequate remedy at law, unless enjoined by the Court.

124. As a result of Defendant’s acts of infringement, Plaintiff has suffered and will continue to suffer damages in an amount to be proven at trial.

COUNT VII

(Tesla’s Infringement of U.S. Patent No. 8,898,395)

125. Paragraphs 1 through 124 are incorporated by reference as if fully set forth herein.

126. **Direct Infringement.** Defendant directly infringed, and continues to directly infringe, literally and/or by the doctrine of equivalents, individually and/or jointly, the ’395 Patent, by designing, developing, making, manufacturing, utilizing, distributing, providing, testing, selling, and/or offering for sale and/or importing into the United States the Accused Products that infringe the ’395 Patent including, but not limited to, Tesla automotive vehicles, and all past, current and future Tesla products that operate in the same or substantially similar manner as the specifically identified products and components (collectively, “Example Count VII Automotive Vehicles”). The Accused Products identified in the example charts incorporated in Example Count VII Automotive Vehicles infringe at least the exemplary claims of the ’395 Patent identified in the charts incorporated into this Count VII (the “Example ’395 Patent Claims”) literally and/or by the doctrine of equivalents.

127. On information and belief, Defendant has also infringed and continues to directly infringe, literally and/or under the doctrine of equivalents, the Exemplary ’395 Patent Claims, by internal testing and use of the Example Count VII Automotive Vehicles.

128. **Willful Blindness.** Defendant knew of the ’395 Patent, or should have known of the ’395 Patent, but was willfully blind to its existence. Defendant has had actual knowledge of the ’395 Patent not later than receipt of a letter, dated April 11, 2024, and received on the same date. By the time of trial, Defendant will have known and intended (since receiving such notice) that its continued actions would infringe and actively induce and contribute to the infringement of one or more claims of the ’395 Patent. *See* Exhibit 20.

129. **Induced Infringement.** Defendant has also induced, and continues to induce, the infringement of the ’395 Patent by others – including, but not limited to, inducing their consumers, partners, vendors, and/or third parties to use their Accused Products, such as Example Count VII

Automotive Vehicles, in an infringing manner as described above, including encouraging and instructing their consumers, partners, vendors, and/or third parties to infringe the ’395 Patent.

130. Defendant therefore actively, knowingly, and intentionally has committed, and continues to commit, affirmative acts that cause infringement, literally and/or by the doctrine of equivalents, of one or more claims of the ’395 Patent with knowledge of the ’395 Patent and knowledge that the induced acts constitute infringement of one or more claims of the ’395 Patent. Defendant has actively induced others, including, but not limited to, consumers, partners, vendors, and/or third parties, who use the Example Count VII Automotive Vehicles to infringe the ’395 Patent, literally and/or by the doctrine of equivalents, throughout the United States, including within this District, by, among other things, advertising, promoting, and instructing the infringing use of the Example Count VII Automotive Vehicles.

131. **Contributory Infringement.** Defendant actively, knowingly, and intentionally has committed, and continues to commit contributory infringement, literally and/or by the doctrine of equivalents, by, *inter alia,* knowingly providing software and technologies that when used, cause the direct infringement of one or more claims of the ’395 Patent by their consumers, partners, vendors, and/or third parties, and which have no substantial non-infringing uses, or include a separate and distinct technology that is especially made or especially adapted for use in infringement of the ’395 Patent, and is not a staple article or commodity of commerce suitable for substantial non-infringing use.

132. Defendant therefore actively, knowingly, and intentionally has been and continues to materially contribute to their consumers’, partners’, vendors’, and/or third-parties’ infringement of the ’395 Patent, literally and/or by the doctrine of equivalents, by designing, developing, making, manufacturing, utilizing, distributing, providing, testing, selling, and/or offering for sale

and/or importing into the United States the Example Count VII Automotive Vehicles for use in a manner that infringes one or more claims of the ’395 Patent. Example Count VII Automotive Vehicles are especially made or adapted for infringing the ’395 Patent and have no substantial non-infringing use.

133. Exhibit 27 (claim charts) includes the Example Count VII Automotive Vehicles and Example ’395 Patent Claims. As set forth in these charts, the Example Count VII Automotive Vehicles practice the technology claimed by the ’395 Patent. Accordingly, the Example Count VII Automotive Vehicles incorporated in these charts satisfy all elements of the Example ’395 Patent Claims.

134. Intellectual Ventures therefore incorporates by reference in its allegations herein the claim charts of Exhibit 27.

135. Intellectual Ventures is entitled to recover damages adequate to compensate for Defendant’s infringement of the ’395 Patent and will continue to be damaged by such infringement. Intellectual Ventures is entitled to recover damages from Defendant to compensate them for Defendant’s infringement, as alleged above, in an amount measured by no less than a reasonable royalty under 35 U.S.C. § 284, as well as enhanced damages pursuant to 35 U.S.C. § 284.

136. Further, Defendant’s infringement of Intellectual Ventures’s rights under the ’395 Patent will continue to damage Intellectual Ventures’s business, causing irreparable harm for which there is no adequate remedy at law, unless enjoined by the Court.

137. As a result of Defendant’s acts of infringement, Plaintiff has suffered and will continue to suffer damages in an amount to be proven at trial.

COUNT VIII

(Tesla's Infringement of U.S. Patent No. 10,136,416)

138. Paragraphs 1 through 137 are incorporated by reference as if fully set forth herein.

139. **Direct Infringement.** Defendant directly infringed, and continues to directly infringe, literally and/or by the doctrine of equivalents, individually and/or jointly, the '416 Patent, by designing, developing, making, manufacturing, utilizing, distributing, providing, testing, selling, and/or offering for sale and/or importing into the United States the Accused Products that infringe the '416 Patent including, but not limited to, Tesla automotive vehicles, and all past, current and future Tesla products that operate in the same or substantially similar manner as the specifically identified products and components (collectively, "Example Count VII Automotive Vehicles"). The Accused Products identified in the example charts incorporated in Example Count VII Automotive Vehicles infringe at least the exemplary claims of the '416 Patent identified in the charts incorporated into this Count VII (the "Example '416 Patent Claims") literally and/or by the doctrine of equivalents.

140. On information and belief, Defendant has also infringed and continues to directly infringe, literally and/or under the doctrine of equivalents, the Exemplary '416 Patent Claims, by internal testing and use of the Example Count VII Automotive Vehicles.

141. **Willful Blindness.** Defendant knew of the '416 Patent, or should have known of the '416 Patent, but was willfully blind to its existence. Defendant has had actual knowledge of the '416 Patent not later than receipt of a letter, dated April 11, 2024, and received on the same date. By the time of trial, Defendant will have known and intended (since receiving such notice) that its continued actions would infringe and actively induce and contribute to the infringement of one or more claims of the '416 Patent. *See* Exhibit 20.

142. **Induced Infringement.** Defendant has also induced, and continues to induce, the infringement of the ’416 Patent by others – including, but not limited to, inducing their consumers, partners, vendors, and/or third parties to use their Accused Products, such as Example Count VII Automotive Vehicles, in an infringing manner as described above, including encouraging and instructing their consumers, partners, vendors, and/or third parties to infringe the ’416 Patent.

143. Defendant therefore actively, knowingly, and intentionally has committed, and continues to commit, affirmative acts that cause infringement, literally and/or by the doctrine of equivalents, of one or more claims of the ’416 Patent with knowledge of the ’416 Patent and knowledge that the induced acts constitute infringement of one or more claims of the ’416 Patent. Defendant has actively induced others, including, but not limited to, consumers, partners, vendors, and/or third parties, who use the Example Count VII Automotive Vehicles to infringe the ’416 Patent, literally and/or by the doctrine of equivalents, throughout the United States, including within this District, by, among other things, advertising, promoting, and instructing the infringing use of the Example Count VII Automotive Vehicles.

144. **Contributory Infringement.** Defendant actively, knowingly, and intentionally has committed, and continues to commit contributory infringement, literally and/or by the doctrine of equivalents, by, *inter alia,* knowingly providing software and technologies that when used, cause the direct infringement of one or more claims of the ’416 Patent by their consumers, partners, vendors, and/or third parties, and which have no substantial non-infringing uses, or include a separate and distinct technology that is especially made or especially adapted for use in infringement of the ’416 Patent, and is not a staple article or commodity of commerce suitable for substantial non-infringing use.

145. Defendant therefore actively, knowingly, and intentionally has been and continues to materially contribute to their consumers', partners', vendors', and/or third-parties' infringement of the '416 Patent, literally and/or by the doctrine of equivalents, by designing, developing, making, manufacturing, utilizing, distributing, providing, testing, selling, and/or offering for sale and/or importing into the United States the Example Count VII Automotive Vehicles for use in a manner that infringes one or more claims of the '416 Patent. Example Count VII Automotive Vehicles are especially made or adapted for infringing the '416 Patent and have no substantial non-infringing use.

146. Exhibit 28 (claim charts) includes the Example Count VII Automotive Vehicles and Example '416 Patent Claims. As set forth in these charts, the Example Count VII Automotive Vehicles practice the technology claimed by the '416 Patent. Accordingly, the Example Count VII Automotive Vehicles incorporated in these charts satisfy all elements of the Example '416 Patent Claims.

147. Intellectual Ventures therefore incorporates by reference in its allegations herein the claim charts of Exhibit 28.

148. Intellectual Ventures is entitled to recover damages adequate to compensate for Defendant's infringement of the '416 Patent and will continue to be damaged by such infringement. Intellectual Ventures is entitled to recover damages from Defendant to compensate them for Defendant's infringement, as alleged above, in an amount measured by no less than a reasonable royalty under 35 U.S.C. § 284, as well as enhanced damages pursuant to 35 U.S.C. § 284.

149. Further, Defendant's infringement of Intellectual Ventures's rights under the '416 Patent will continue to damage Intellectual Ventures's business, causing irreparable harm for which there is no adequate remedy at law, unless enjoined by the Court.

150. As a result of Defendant's acts of infringement, Plaintiff has suffered and will continue to suffer damages in an amount to be proven at trial.

COUNT IX

(Tesla's Infringement of U.S. Patent No. 7,916,180)

151. Paragraphs 1 through 150 are incorporated by reference as if fully set forth herein.

152. **Direct Infringement.** Defendant directly infringed, and continues to directly infringe, literally and/or by the doctrine of equivalents, individually and/or jointly, the '180 Patent, by designing, developing, making, manufacturing, utilizing, distributing, providing, testing, selling, and/or offering for sale and/or importing into the United States the Accused Products that infringe the '180 Patent including, but not limited to, Tesla automotive vehicles, and all past, current and future Tesla products that operate in the same or substantially similar manner as the specifically identified products and components (collectively, "Example Count IX Automotive Vehicles"). The Accused Products identified in the example charts incorporated in Example Count IX Automotive Vehicles infringe at least the exemplary claims of the '180 Patent identified in the charts incorporated into this Count IX (the "Example '180 Patent Claims") literally and/or by the doctrine of equivalents.

153. On information and belief, Defendant has also infringed and continues to directly infringe, literally and/or under the doctrine of equivalents, the Exemplary '180 Patent Claims, by internal testing and use of the Example Count IX Automotive Vehicles.

154. **Willful Blindness.** Defendant knew of the '180 Patent, or should have known of the '180 Patent, but was willfully blind to its existence. Defendant has had actual knowledge of

the ’180 Patent not later than receipt of a letter, dated April 11, 2024, and received on the same date. By the time of trial, Defendant will have known and intended (since receiving such notice) that its continued actions would infringe and actively induce and contribute to the infringement of one or more claims of the ’180 Patent. *See* Exhibit 20.

155. **Induced Infringement.** Defendant has also induced, and continues to induce, the infringement of the ’180 Patent by others – including, but not limited to, inducing their consumers, partners, vendors, and/or third parties to use their Accused Products, such as Example Count IX Automotive Vehicles, in an infringing manner as described above, including encouraging and instructing their consumers, partners, vendors, and/or third parties to infringe the ’180 Patent.

156. Defendant therefore actively, knowingly, and intentionally has committed, and continues to commit, affirmative acts that cause infringement, literally and/or by the doctrine of equivalents, of one or more claims of the ’180 Patent with knowledge of the ’180 Patent and knowledge that the induced acts constitute infringement of one or more claims of the ’180 Patent. Defendant has actively induced others, including, but not limited to, consumers, partners, vendors, and/or third parties, who use the Example Count IX Automotive Vehicles to infringe the ’180 Patent, literally and/or by the doctrine of equivalents, throughout the United States, including within this District, by, among other things, advertising, promoting, and instructing the infringing use of the Example Count IX Automotive Vehicles.

157. **Contributory Infringement.** Defendant actively, knowingly, and intentionally has committed, and continues to commit contributory infringement, literally and/or by the doctrine of equivalents, by, *inter alia,* knowingly providing software and technologies that when used, cause the direct infringement of one or more claims of the ’180 Patent by their consumers, partners, vendors, and/or third parties, and which have no substantial non-infringing uses, or include a

separate and distinct technology that is especially made or especially adapted for use in infringement of the ’180 Patent, and is not a staple article or commodity of commerce suitable for substantial non-infringing use.

158. Defendant therefore actively, knowingly, and intentionally has been and continues to materially contribute to their consumers’, partners’, vendors’, and/or third-parties’ infringement of the ’180 Patent, literally and/or by the doctrine of equivalents, by designing, developing, making, manufacturing, utilizing, distributing, providing, testing, selling, and/or offering for sale and/or importing into the United States the Example Count IX Automotive Vehicles for use in a manner that infringes one or more claims of the ’180 Patent. Example Count IX Automotive Vehicles are especially made or adapted for infringing the ’180 Patent and have no substantial non-infringing use.

159. Exhibit 29 (claim charts) includes the Example Count IX Automotive Vehicles and Example ’180 Patent Claims. As set forth in these charts, the Example Count IX Automotive Vehicles practice the technology claimed by the ’180 Patent. Accordingly, the Example Count IX Automotive Vehicles incorporated in these charts satisfy all elements of the Example ’180 Patent Claims.

160. Intellectual Ventures therefore incorporates by reference in its allegations herein the claim charts of Exhibit 29.

161. Intellectual Ventures is entitled to recover damages adequate to compensate for Defendant’s infringement of the ’180 Patent and will continue to be damaged by such infringement. Intellectual Ventures is entitled to recover damages from Defendant to compensate them for Defendant’s infringement, as alleged above, in an amount measured by no less than a

reasonable royalty under 35 U.S.C. § 284, as well as enhanced damages pursuant to 35 U.S.C. § 284.

162. Further, Defendant's infringement of Intellectual Ventures's rights under the '180 Patent will continue to damage Intellectual Ventures's business, causing irreparable harm for which there is no adequate remedy at law, unless enjoined by the Court.

163. As a result of Defendant's acts of infringement, Plaintiff has suffered and will continue to suffer damages in an amount to be proven at trial.

COUNT X
(Tesla's Infringement of U.S. Patent No. 9,232,158)

164. Paragraphs 1 through 163 are incorporated by reference as if fully set forth herein.

165. **Direct Infringement.** Defendant directly infringed, and continues to directly infringe, literally and/or by the doctrine of equivalents, individually and/or jointly, the '158 Patent, by designing, developing, making, manufacturing, utilizing, distributing, providing, testing, selling, and/or offering for sale and/or importing into the United States the Accused Products that infringe the '158 Patent including, but not limited to, Tesla automotive vehicles, and all past, current and future Tesla products that operate in the same or substantially similar manner as the specifically identified products and components (collectively, "Example Count X Automotive Vehicles"). The Accused Products identified in the example charts incorporated in Example Count X Automotive Vehicles infringe at least the exemplary claims of the '158 Patent identified in the charts incorporated into this Count X (the "Example '158 Patent Claims") literally and/or by the doctrine of equivalents.

166. On information and belief, Defendant has also infringed and continues to directly infringe, literally and/or under the doctrine of equivalents, the Exemplary '158 Patent Claims, by internal testing and use of the Example Count X Automotive Vehicles.

167. **Willful Blindness.** Defendant knew of the ’158 Patent, or should have known of the ’158 Patent, but was willfully blind to its existence. Defendant has had actual knowledge of the ’158 Patent not later than receipt of a letter, dated April 11, 2024, and received on the same date. By the time of trial, Defendant will have known and intended (since receiving such notice) that its continued actions would infringe and actively induce and contribute to the infringement of one or more claims of the ’158 Patent. *See* Exhibit 20.

168. **Induced Infringement.** Defendant has also induced, and continues to induce, the infringement of the ’158 Patent by others – including, but not limited to, inducing their consumers, partners, vendors, and/or third parties to use their Accused Products, such as Example Count X Automotive Vehicles, in an infringing manner as described above, including encouraging and instructing their consumers, partners, vendors, and/or third parties to infringe the ’158 Patent.

169. Defendant therefore actively, knowingly, and intentionally has committed, and continues to commit, affirmative acts that cause infringement, literally and/or by the doctrine of equivalents, of one or more claims of the ’158 Patent with knowledge of the ’158 Patent and knowledge that the induced acts constitute infringement of one or more claims of the ’158 Patent. Defendant has actively induced others, including, but not limited to, consumers, partners, vendors, and/or third parties, who use the Example Count X Automotive Vehicles to infringe the ’158 Patent, literally and/or by the doctrine of equivalents, throughout the United States, including within this District, by, among other things, advertising, promoting, and instructing the infringing use of the Example Count X Automotive Vehicles.

170. **Contributory Infringement.** Defendant actively, knowingly, and intentionally has committed, and continues to commit contributory infringement, literally and/or by the doctrine of equivalents, by, *inter alia,* knowingly providing software and technologies that when used, cause

the direct infringement of one or more claims of the ’158 Patent by their consumers, partners, vendors, and/or third parties, and which have no substantial non-infringing uses, or include a separate and distinct technology that is especially made or especially adapted for use in infringement of the ’158 Patent, and is not a staple article or commodity of commerce suitable for substantial non-infringing use.

171. Defendant therefore actively, knowingly, and intentionally has been and continues to materially contribute to their consumers’, partners’, vendors’, and/or third-parties’ infringement of the ’158 Patent, literally and/or by the doctrine of equivalents, by designing, developing, making, manufacturing, utilizing, distributing, providing, testing, selling, and/or offering for sale and/or importing into the United States the Example Count X Automotive Vehicles for use in a manner that infringes one or more claims of the ’158 Patent. Example Count X Automotive Vehicles are especially made or adapted for infringing the ’158 Patent and have no substantial non-infringing use.

172. Exhibit 30 (claim charts) includes the Example Count X Automotive Vehicles and Example ’158 Patent Claims. As set forth in these charts, the Example Count X Automotive Vehicles practice the technology claimed by the ’158 Patent. Accordingly, the Example Count X Automotive Vehicles incorporated in these charts satisfy all elements of the Example ’158 Patent Claims.

173. Intellectual Ventures therefore incorporates by reference in its allegations herein the claim charts of Exhibit 30.

174. Intellectual Ventures is entitled to recover damages adequate to compensate for Defendant’s infringement of the ’158 Patent and will continue to be damaged by such infringement. Intellectual Ventures is entitled to recover damages from Defendant to compensate

them for Defendant's infringement, as alleged above, in an amount measured by no less than a reasonable royalty under 35 U.S.C. § 284, as well as enhanced damages pursuant to 35 U.S.C. § 284.

175. Further, Defendant's infringement of Intellectual Ventures's rights under the '158 Patent will continue to damage Intellectual Ventures's business, causing irreparable harm for which there is no adequate remedy at law, unless enjoined by the Court.

176. As a result of Defendant's acts of infringement, Plaintiff has suffered and will continue to suffer damages in an amount to be proven at trial.

COUNT XI

(Tesla's Infringement of U.S. Patent No. 7,181,743)

177. Paragraphs 1 through 176 are incorporated by reference as if fully set forth herein.

178. **Direct Infringement.** Defendant directly infringed, and continues to directly infringe, literally and/or by the doctrine of equivalents, individually and/or jointly, the '743 Patent, by designing, developing, making, manufacturing, utilizing, distributing, providing, testing, selling, and/or offering for sale and/or importing into the United States the Accused Products that infringe the '743 Patent including, but not limited to, Tesla automotive vehicles, and all past, current and future Tesla products that operate in the same or substantially similar manner as the specifically identified products and components (collectively, "Example Count XI Automotive Vehicles"). The Accused Products identified in the example charts incorporated in Example Count XI Automotive Vehicles infringe at least the exemplary claims of the '743 Patent identified in the charts incorporated into this Count XI (the "Example '743 Patent Claims") literally and/or by the doctrine of equivalents.

179. On information and belief, Defendant has also infringed and continues to directly infringe, literally and/or under the doctrine of equivalents, the Exemplary ’743 Patent Claims, by internal testing and use of the Example Count XI Automotive Vehicles.

180. **Willful Blindness.** Defendant knew of the ’743 Patent, or should have known of the ’743 Patent, but was willfully blind to its existence. Defendant has had actual knowledge of the ’743 Patent not later than receipt of a letter, dated April 11, 2024, and received on the same date. By the time of trial, Defendant will have known and intended (since receiving such notice) that its continued actions would infringe and actively induce and contribute to the infringement of one or more claims of the ’743 Patent. *See* Exhibit 20.

181. **Induced Infringement.** Defendant has also induced, and continues to induce, the infringement of the ’743 Patent by others – including, but not limited to, inducing their consumers, partners, vendors, and/or third parties to use their Accused Products, such as Example Count XI Automotive Vehicles, in an infringing manner as described above, including encouraging and instructing their consumers, partners, vendors, and/or third parties to infringe the ’743 Patent.

182. Defendant therefore actively, knowingly, and intentionally has committed, and continues to commit, affirmative acts that cause infringement, literally and/or by the doctrine of equivalents, of one or more claims of the ’743 Patent with knowledge of the ’743 Patent and knowledge that the induced acts constitute infringement of one or more claims of the ’743 Patent. Defendant has actively induced others, including, but not limited to, consumers, partners, vendors, and/or third parties, who use the Example Count XI Automotive Vehicles to infringe the ’743 Patent, literally and/or by the doctrine of equivalents, throughout the United States, including within this District, by, among other things, advertising, promoting, and instructing the infringing use of the Example Count XI Automotive Vehicles.

183. **Contributory Infringement.** Defendant actively, knowingly, and intentionally has committed, and continues to commit contributory infringement, literally and/or by the doctrine of equivalents, by, *inter alia,* knowingly providing software and technologies that when used, cause the direct infringement of one or more claims of the ’743 Patent by their consumers, partners, vendors, and/or third parties, and which have no substantial non-infringing uses, or include a separate and distinct technology that is especially made or especially adapted for use in infringement of the ’743 Patent, and is not a staple article or commodity of commerce suitable for substantial non-infringing use.

184. Defendant therefore actively, knowingly, and intentionally has been and continues to materially contribute to their consumers’, partners’, vendors’, and/or third-parties’ infringement of the ’743 Patent, literally and/or by the doctrine of equivalents, by designing, developing, making, manufacturing, utilizing, distributing, providing, testing, selling, and/or offering for sale and/or importing into the United States the Example Count XI Automotive Vehicles for use in a manner that infringes one or more claims of the ’743 Patent. Example Count XI Automotive Vehicles are especially made or adapted for infringing the ’743 Patent and have no substantial non-infringing use.

185. Exhibit 31 (claim charts) includes the Example Count XI Automotive Vehicles and Example ’743 Patent Claims. As set forth in these charts, the Example Count XI Automotive Vehicles practice the technology claimed by the ’743 Patent. Accordingly, the Example Count XI Automotive Vehicles incorporated in these charts satisfy all elements of the Example ’743 Patent Claims.

186. Intellectual Ventures therefore incorporates by reference in its allegations herein the claim charts of Exhibit 31.

187. Intellectual Ventures is entitled to recover damages adequate to compensate for Defendant's infringement of the '743 Patent and will continue to be damaged by such infringement. Intellectual Ventures is entitled to recover damages from Defendant to compensate them for Defendant's infringement, as alleged above, in an amount measured by no less than a reasonable royalty under 35 U.S.C. § 284, as well as enhanced damages pursuant to 35 U.S.C. § 284.

188. As a result of Defendant's acts of infringement, Plaintiff has suffered and will continue to suffer damages in an amount to be proven at trial.

COUNT XII

(Tesla's Infringement of U.S. Patent No. 6,894,639)

189. Paragraphs 1 through 188 are incorporated by reference as if fully set forth herein.

190. **Direct Infringement.** Defendant directly infringed, and continues to directly infringe, literally and/or by the doctrine of equivalents, individually and/or jointly, the '639 Patent, by designing, developing, making, manufacturing, utilizing, distributing, providing, testing, selling, and/or offering for sale and/or importing into the United States the Accused Products that infringe the '639 Patent including, but not limited to, Tesla automotive vehicles, and all past, current and future Tesla products that operate in the same or substantially similar manner as the specifically identified products and components (collectively, "Example Count XII Automotive Vehicles"). The Accused Products identified in the example charts incorporated in Example Count XII Automotive Vehicles infringe at least the exemplary claims of the '639 Patent identified in the charts incorporated into this Count XII (the "Example '639 Patent Claims") literally and/or by the doctrine of equivalents.

191. On information and belief, Defendant has also infringed and continues to directly infringe, literally and/or under the doctrine of equivalents, the Exemplary ’639 Patent Claims, by internal testing and use of the Example Count XII Automotive Vehicles.

192. **Willful Blindness.** Defendant knew of the ’639 Patent, or should have known of the ’639 Patent, but was willfully blind to its existence. Defendant has had actual knowledge of the ’639 Patent not later than receipt of a letter, dated August 7, 2020 and received on the same date. Defendant also has had actual knowledge of the ’639 Patent not later than receipt of a letter, dated April 11, 2024, and received on the same date. By the time of trial, Defendant will have known and intended (since receiving such notice) that its continued actions would infringe and actively induce and contribute to the infringement of one or more claims of the ’639 Patent. *See* Exhibits 19 & 20.

193. **Induced Infringement.** Defendant has also induced, and continues to induce, the infringement of the ’639 Patent by others – including, but not limited to, inducing their consumers, partners, vendors, and/or third parties to use their Accused Products, such as Example Count XII Automotive Vehicles, in an infringing manner as described above, including encouraging and instructing their consumers, partners, vendors, and/or third parties to infringe the ’639 Patent.

194. Defendant therefore actively, knowingly, and intentionally has committed, and continues to commit, affirmative acts that cause infringement, literally and/or by the doctrine of equivalents, of one or more claims of the ’639 Patent with knowledge of the ’639 Patent and knowledge that the induced acts constitute infringement of one or more claims of the ’639 Patent. Defendant has actively induced others, including, but not limited to, consumers, partners, vendors, and/or third parties, who use the Example Count XII Automotive Vehicles to infringe the ’639 Patent, literally and/or by the doctrine of equivalents, throughout the United States, including

within this District, by, among other things, advertising, promoting, and instructing the infringing use of the Example Count XII Automotive Vehicles.

195. **Contributory Infringement.** Defendant actively, knowingly, and intentionally has committed, and continues to commit contributory infringement, literally and/or by the doctrine of equivalents, by, *inter alia,* knowingly providing software and technologies that when used, cause the direct infringement of one or more claims of the ’639 Patent by their consumers, partners, vendors, and/or third parties, and which have no substantial non-infringing uses, or include a separate and distinct technology that is especially made or especially adapted for use in infringement of the ’639 Patent, and is not a staple article or commodity of commerce suitable for substantial non-infringing use.

196. Defendant therefore actively, knowingly, and intentionally has been and continues to materially contribute to their consumers’, partners’, vendors’, and/or third-parties’ infringement of the ’639 Patent, literally and/or by the doctrine of equivalents, by designing, developing, making, manufacturing, utilizing, distributing, providing, testing, selling, and/or offering for sale and/or importing into the United States the Example Count XII Automotive Vehicles for use in a manner that infringes one or more claims of the ’639 Patent. Example Count XII Automotive Vehicles are especially made or adapted for infringing the ’639 Patent and have no substantial non-infringing use.

197. Exhibit 32 (claim charts) includes the Example Count XII Automotive Vehicles and Example ’639 Patent Claims. As set forth in these charts, the Example Count XII Automotive Vehicles practice the technology claimed by the ’639 Patent. Accordingly, the Example Count XII Automotive Vehicles incorporated in these charts satisfy all elements of the Example ’639 Patent Claims.

198. Intellectual Ventures therefore incorporates by reference in its allegations herein the claim charts of Exhibit 32.

199. Intellectual Ventures is entitled to recover damages adequate to compensate for Defendant's infringement of the '639 Patent and will continue to be damaged by such infringement. Intellectual Ventures is entitled to recover damages from Defendant to compensate them for Defendant's infringement, as alleged above, in an amount measured by no less than a reasonable royalty under 35 U.S.C. § 284, as well as enhanced damages pursuant to 35 U.S.C. § 284.

200. As a result of Defendant's acts of infringement, Plaintiff has suffered and will continue to suffer damages in an amount to be proven at trial.

DEMAND FOR JURY TRIAL

201. Under Rule 38(b) of the Federal Rules of Civil Procedure, Plaintiff respectfully requests a trial by jury on all issues so triable.

PRAYER FOR RELIEF

WHEREFORE, Plaintiff respectfully requests the following relief:

A. A judgment that the Patents-in-Suit are valid and enforceable;

B. A judgment that Defendant directly infringes, contributorily infringes, and/or actively induces infringement of one or more claims of *each of* the Patents-in-Suit;

C. A judgment that awards Plaintiff all damages adequate to compensate them for Defendant's direct infringement, willful infringement, contributory infringement, and/or induced infringement, of the Patents-in-Suit, including all pre- judgment and post- judgment interest at the maximum rate permitted by law;

D. A judgment that awards Plaintiff all appropriate damages under 35 U.S.C. § 284 for Defendant's past infringement with respect to the Patents-in-Suit;

E. A judgment that awards Plaintiff all appropriate damages under 35 U.S.C. § 284 for Defendant's infringement of the '805 Patent, '500 Patent '138 Patent, '153 Patent, '395 Patent, '416 Patent, '180 Patent, '158 Patent, '670 Patent, and '889 Patent, which continue to damage Plaintiff's business, causing irreparable harm for which there is no adequate remedy at law, unless enjoined by the Court;

F. A judgment that awards Plaintiff all appropriate damages under 35 U.S.C. § 284 for Defendant's continuing or future infringement, up until the date such judgment is entered with respect to the Patents-in-Suit, including ongoing royalties, pre- and post-judgment interest, costs, and disbursements as justified under 35 U.S.C. § 284;

G. A judgment that this case is exceptional under 35 U.S.C. § 285;

H. An accounting of all damages not presented at trial; and

I. A judgment that awards Plaintiff its costs, disbursements, attorneys' fees, and such further and additional relief as is deemed appropriate by the Court.

Dated: April 12, 2024

RESPECTFULLY SUBMITTED,

By: */s/ Mark D. Siegmund*

Mark D. Siegmund (TX Bar No. 24117055)
msiegmund@cjsjlaw.com
CHERRY JOHNSON SIEGMUND JAMES PLLC
The Roosevelt Tower
400 Austin Avenue, 9th Floor
Waco, Texas 76701
Telephone: (254) 732-2242

Jonathan K. Waldrop (CA Bar No. 297903)
(Admitted in this District)
jwaldrop@kasowitz.com
Darcy L. Jones (CA Bar No. 309474)
(Admitted in this District)
djones@kasowitz.com
Marcus A. Barber (CA Bar No. 307361)
(Admitted in this District)
mbarber@kasowitz.com
John W. Downing (CA Bar No. 252850)
(Admitted in this District)
jdowning@kasowitz.com
Heather S. Kim (CA Bar No. 277686)
(Admitted in this District)
hkim@kasowitz.com
ThucMinh Nguyen (CA Bar No. 304382)
(Admitted in this District)
tnguyen@kasowitz.com
KASOWITZ BENSON TORRES LLP
333 Twin Dolphin Drive, Suite 200
Redwood Shores, California 94065
Telephone: (650) 453-5170
Facsimile: (650) 453-5171

Attorneys for Plaintiff
INTELLECTUAL VENTURES II LLC