UNITED STATES PATENT AND TRADEMARK OFFICE

BEFORE THE PATENT TRIAL AND APPEAL BOARD

TESLA, INC.,

Petitioner,

v.

INTELLECTUAL VENTURES II, LLC,

Patent Owner

Case No. IPR2025-00217
U.S. Patent No. 10,952,153

UNITED STATES PATENT AND TRADEMARK OFFICE

BEFORE THE PATENT TRIAL AND APPEAL BOARD

TESLA, INC.,

Petitioner,

v.

INTELLECTUAL VENTURES II, LLC,

Patent Owner

Case No. IPR2025-00219
U.S. Patent No. 9,706,500

Patent Owner Demonstratives

"DEMONSTRATIVE EXHIBIT - NOT EVIDENCE"

Independent Claims of the ‘153 Patent

1. A user equipment (UE) comprising:

a transmitter;

a receiver; and

a processor operatively coupled to the transmitter and the receiver,

wherein the processor is configured to cause:

the receiver to receive, from a network device, an indication that transmit power control (TPC) command accumulation is enabled,

the receiver to receive, from the network device, on a single physical channel, scheduling information and power control information that includes a multi-level TPC command, and

the transmitter to transmit, to the network device, an uplink signal based on the received scheduling information and the multi-level TPC command.

11. A method performed by a user equipment (UE) having a transmitter and a receiver, the method comprising:

receiving, by the UE, an indication from a network device that transmit power control (TPC) command accumulation is enabled;

receiving, by the UE on a single physical channel from the network device, scheduling information and power control information that includes a multi-level TPC command; and

transmitting, by the UE to the network device, an uplink signal based on the received scheduling information and the multi-level TPC command.

"DEMONSTRATIVE EXHIBIT - NOT EVIDENCE"

Independent Claims of the ‘500 Patent

11. A user equipment (UE) comprising:

a transmitter;

a receiver;

a processor operatively coupled to the transmitter and the receiver; and

the processor and the receiver are configured to receive, on a single physical channel, an allocation of an uplink resource and a multi-level transmit power control (TPC) command;

wherein the processor is further configured to determine a transmission power level based on a value of the multi-level TPC command out of a plurality of potential values for the multi-level TPC command;

wherein the plurality of potential values for the multi-level TPC command includes at least two values up or at least two values down; and

wherein the processor is configured to have the transmitter transmit an uplink signal on the allocated uplink resource at the determined transmission power level.

17. A method comprising:

receiving, by a user equipment (UE) on a single physical channel, an allocation of an uplink resource and a multi-level transmit power control (TPC) command;

determining, by the UE, a transmission power level based on a value of the multi-level TPC command out of a plurality of potential values for the multi-level TPC command;

wherein the plurality of potential values for the multi-level TPC command that includes at least two values up or at least two values down; and

transmitting, by the UE, an uplink signal on the allocated uplink resource at the determined transmission power level..

"TPC Command Accumulation" and the "Indication…Enabled" Limitation

The parties' dispute on this issue turns on claim construction. Petitioner's approach requires we read "accumulation" as updating transmission power for each received TPC command. That is consistent with some aspects of the '153 patent's description. *See* Ex. 1001, 9:29–42 ("[S]tep is the magnitude of the amount added to an accumulator upon receipt of each TPC command. . . . [T]he transmit power $P_{Tx}(k)$ may be updated each time a new TPC command is received."). Patent Owner's approach requires only that TPC commands cumulatively affect transmission power. That also appears consistent with the '153 patent's description. *See id.* at 9:35–36 ("The transmit power $P_{Tx}(k)$ may be updated for every frame period."). Based on those disclosures, it appears that the Specification supports Patent Owner's broader construction.

IPR2025-00217 ID, 8

Taken together, the specification makes clear that "accumulation" means storing or integrating multiple TPC commands so they have a combined effect on transmit power. There is no limitation that requires accumulation to occur at specific time intervals (i.e., each time a TPC command is received), as the Petitioner suggest. Petitioner's attempt to narrow the term to iterative, per-command updating is contradicted by the express disclosure that accumulation may be applied in different ways, including only once per frame.

IPR2025-00217 POR, 14-15

In Reply, Petitioner attempts to collapse that live construction question by adopting the Board's "cumulative effect" phrasing while simultaneously importing a narrowing gloss: Petitioner asserts the "correct construction" is "summing [the] magnitude of each TPC command adjustment to cumulatively affect transmission power." Reply, 8. Petitioner then uses that gloss to argue that Baker's PCA=2 "disables" accumulation because the UE "compares" groups of five, rather than "sum[s] the magnitude of the TPC command adjustments." Reply, 9.

That move does not satisfy the limitation that Petitioner must prove. Whether a particular implementation is described as "comparing" or "summing," Petitioner still must identify a disclosure in Baker where the UE receives, from the network device, an indication that accumulation is enabled. POR, 36–37; EX2016, ¶101. Neither the "magnitude-summing" gloss nor the PCA equals 2 "comparison" narrative identify any mechanism in Baker that signals enablement as such, or any enable or disable control state communicated from the network to the UE. EX2016, ¶101. Instead, Petitioner's analysis simply re-labels Baker's grouped decision rule as "disablement," and then treats that relabeling as if it were the claimed "indication." Reply, 9–10; EX1072, ¶¶28–34.

IPR2025-00217 Sur-Reply, 1

“On a Single Physical Channel”

B. “On a Single Physical Channel”

“On a single physical channel” means on the same physical channel instance addressed to the UE for the relevant uplink transmission, not merely in the same system across different channelization codes or different time slots. Compare EX1004, 1:33-34 (a TDD “resource unit” is the combination of a single code in a single time slot (code+time define the L1 bearer); EX1005, ¶¶37–41 (forward-link Walsh channels identified by MACIndex/covers within time-multiplexed slots); EX2016, ¶49. The ‘153 Patent specification expressly describes a single downlink physical channel that carries fast allocation/scheduling and power-control feedback (TPC) to the UE. EX1001, 12:66–13:6; EX2016, ¶49.

IPR2025-00217 POR, 18

Patent Owner’s construction flows directly from the claim language and the asserted invention’s signaling objective. The claims are not satisfied by showing that “scheduling information” exists somewhere in the system and “power control information” exists somewhere else, even if both are transmitted in the same time interval. The limitation requires that the UE receives both categories of information “on a single physical channel,” which means e.g., a particular physical channel such as one defined by specific code and time resources. POR, 24. Dr. Lomp explains the same point: “on a single physical channel” refers to the same physical-channel instance for the relevant uplink transmission, not merely communications occurring “in the same system” across different channelization resources or different time slots. EX2016, ¶49.

IPR2025-00217 Sur-Reply, 15

"DEMONSTRATIVE EXHIBIT - NOT EVIDENCE"

Andersson in view of Baker and Khan

- **2025-00217 (‘153)**
  - Ground #1 1-2, 4-5, 11-12, 14-15 35 U.S.C. over Andersson in view of Baker and Khan
  - Ground #2 3, 13 over Andersson in view of Baker, Khan, and Dick
- **2025-00219 (‘500)**
  - Ground #1 11, 15-17, 21 22 over Andersson in view of Khan
  - Ground #2 12-13, 18-19 over Andersson in view of Khan and Baker
  - Ground #3 14, 20 over Andersson in view of Khan and Dick

Anderson Always Uses Accumulation

Andersson teaches UE uplink transmit power control using TPC commands. The TPC commands themselves "either raise, lower, or make no change to the transceiver's current transmit power." EX1009, 9:4-6; EX2016, ¶93. While accumulation is not specifically mentioned in Andersson, to the extent it is implied, the TPC commands would be used to raise, lower or make no change to the UE transmit power level by adding the TPCs to an accumulator. *Id*. When the TPCs indicate + or -, the value in the accumulator either increases or decreases. The concept of TPC accumulation, as well as an explanation as to how the concept has evolved since its infancy, is described in detail in the declaration of Gary Lomp. EX2016, ¶¶35-42.

IPR2025-00217 POR, 33

controlled radio (block **202**). The detected signal quality parameter is compared to a desired signal quality parameter, e.g., a target CIR, and a difference is determined (block **204**). A transmit power control command is sent to the radio transceiver to either raise, lower, or make no change to the transceiver's current transmit power (block **206**). A power control indicator is added to the transmit power control command, and in its simplest form, may be a single flag bit. The power control indicator indicates whether a first type or a second type of power control adjustment should be used depending upon the difference (block **208**).

EX1009, 9:1-11

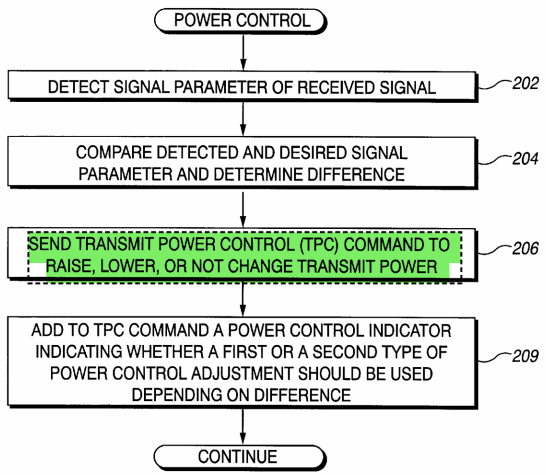

Fig. 4

EX1009, Fig. 4

Baker Always Uses Accumulation

Patent Owner's record evidence is that Baker's PCA parameter changes how TPC inputs are processed over time, not whether the UE's transmit power is determined with reference to accumulated prior TPC information. Dr. Lomp explains that when PCA=2, "TPC commands are still being integrated, albeit over a longer time interval," and "[t]he adjustment to the UE's transmit power is simply deferred, not disabled." EX2016, ¶ 99. Dr. Lomp's declaration further explains that Baker contains "no teaching…that accumulation can be turned off or that the accumulator can be reset," and that "the UE's transmit power is always updated based on a function of one or more prior TPC commands—i.e., accumulation is always implied to be 'enabled.'" EX2016, ¶ 100. That is the core point Petitioner never answers: PCA=2 is, at most, a different update cadence and decision rule; it is not "disablement" of accumulation.

IPR2025-00217 Sur-Reply, 2

[**0022**] When the value of PCA is **1**, Δ_{TPC} can take a value of 1 or 2. If a received TPC command is "0" then the MS **110** reduces its transmission power by Δ_{TPC} dB, while if the received command is "1" the MS **110** increases its transmission power by Δ_{TPC} dB.

EX1010, 22

[**0023**] When the value of PCA is **2**, Δ_{TPC} can only take the value of 1 and the MS **110** combines TPC commands in groups of five. If all five TPC commands are "1" the transmission power is increased by Δ_{TPC} dB, if all five TPC commands are "0" the transmission power is decreased by Δ_{TPC} dB, otherwise the transmission power is unchanged. This method effectively emulates the use of a power control step size of approximately 0.2 dB, as disclosed in UK patent application 9915571.5 (our reference PHB 34358).

EX1010, 23

Not Changing a Value is Not the Same as Disabling it

EX2016, ¶99-103. This is an important distinction because disabling accumulation goes a step further, and would potentially result in a reset of the value stored in the accumulator at the time TPC command accumulation is disabled. Similarly, if TPC command accumulation is enabled after being disabled, the value in the accumulator is initialized to some predetermined value. This is consistent with the way TPC command accumulation is explained in the '153 Patent. EX1001, 9:28-31 (explaining, for example, that "K is the initial frame number determined when the power control process begins" (emphasis added)).

IPR2025-00217 POR, 36

The POR makes the same point with claim-specific consequences. The POR explains that the Petition's "PCA=2 disables accumulation" theory improperly treats "transmission power is unchanged" as if it were disabling accumulation, when it simply corresponds to a zero adjustment (i.e., ΔTPC=0 is effectively applied) and does not imply state suspension, reset, or loss of accumulated history. POR, 36–37. The POR further explains why true "disablement" would be a qualitatively different control-state transition, typically involving freezing or resetting internal state and reinitializing when accumulation resumes, and that neither Baker nor Andersson discloses any such enable/disable mechanism. POR, 36–37.

IPR2025-00217 Sur-Reply, 5

"DEMONSTRATIVE EXHIBIT - NOT EVIDENCE"

Both Scheduling Information And Power Control Information Are Required To Be In The Same Physical Channel

In Reply, Petitioner characterizes Patent Owner's incompatibility arguments as a "bodily incorporation" strawman and insists "no redesign is needed" because the combination "merely contemplates" using Andersson's "other bits" in the DPCCH "for an uplink signaling grant." Reply, 21. But the claim dispute is not whether a control channel has any spare bits in the abstract. The claim requires that the UE receives both scheduling information and power control information on a single physical channel in a manner that actually performs the claimed function—namely, providing the UE with the parameters necessary "to transmit, to the network device, an uplink signal based on the received scheduling information and the multi-level TPC command," through the same physical-channel. POR, 24.

IPR2025-00217 Sur-Reply, 16-17

Dr. Lomp's declaration explains why the mismatch is not superficial. Shared-channel structures require additional multiplexing methods and addressing mechanisms precisely because multiple UEs can demodulate shared channels; dedicated channels are instead allocated so only the intended UE receives the channel, and the dedicated channel is a continuous fixed-format stream rather than a slot-carved shared medium. EX2016, ¶¶115–117. Those architectural distinctions are directly relevant to whether Petitioner can satisfy the "single physical channel" co-carriage requirement without changing the nature of the channel itself, which is exactly what Petitioner's "other bits" narrative attempts to sidestep.

IPR2025-00217 Sur-Reply, 18

The Claims Require Co-Carraige to the Same UE

Petitioner's own reliance on Khan illustrates why. Khan explains that, "[i]n order to support both the TPC bits and the scheduling grant … simultaneously, orthogonal Walsh covers may be needed," and that it "may also be possible to time-multiplex" the information, including where a MACIndex "may … carry the TPC bit in some slots and the scheduling grant in one or more of the remaining slots." EX1005, ¶[0047]. In other words, Khan's mechanisms for associating both types of information with the same general downlink structure are expressly (i) code/cover separation or (ii) slot separation. EX1005, ¶[0047].

IPR2025-00217 Sur-Reply, 12

Those are precisely the two routes the POR explains do *not* satisfy the claim phrase "on a single physical channel" as used in the '500 Patent. The POR makes explicit that a POSITA would understand "physical channel" here as the specific L1 bearer (defined by code and timing) addressed to the UE, "not a collection of different covers or slot fields shared across users," and that this understanding "excludes Khan's orthogonal-cover embodiment (distinct Walsh covers ⇒ distinct physical channels) and its time-multiplex embodiment (TPC and grants placed in different slots …), neither of which teaches co-carriage to the same UE on the same physical channel as claimed." POR, 16–17.

IPR2025-00219 Sur-Reply, 13

Petitioner's Reply does not engage with this claim-scope problem. Instead, the Reply asserts that the Petition presents a "simple combination" in which both parameters are transmitted on Andersson's dedicated control channel "based on Khan's disclosure of transmitting both parameters on a single physical channel," and accuses Patent Owner of arguing a strawman "physical incorporation." Reply, 9–10. But that reframing misses the point: the dispute is not whether Petitioner proposes "physical incorporation" as a formal matter; it is whether the *only* Khan disclosures Petitioner invokes to satisfy "single physical channel" are, by their own terms, implemented via different Walsh covers or different slots—approaches that Patent Owner's construction excludes and that Petitioner never reconciles with the claim language.

IPR2025-00219 Sur-Reply, 14

Petitioner Fails To Meet Their Burden Of Establishing Why A POSITA Would Combine

In short, the Reply's "other bits" and "CDMA umbrella" arguments do not meet Petitioner's burden on the "single physical channel" limitation. Under the proper construction, Petitioner must prove a concrete disclosure or suggestion of co-carriage on the same physical-channel instance to the UE, and the trial record shows that Petitioner's combination depends on importing shared-channel slot multiplexing concepts that are not taught as compatible with Andersson's dedicated, fixed-format DPCCH without redesign that the prior art does not motivate in a claim-directed way.

IPR2025-00217 Sur-Reply, 20

Petitioner's Reply does not engage with this claim-scope problem. Instead, the Reply asserts that the Petition presents a "simple combination" in which both parameters are transmitted on Andersson's dedicated control channel "based on Khan's disclosure of transmitting both parameters on a single physical channel," and accuses Patent Owner of arguing a strawman "physical incorporation." Reply, 9–10. But that reframing misses the point: the dispute is not whether Petitioner proposes "physical incorporation" as a formal matter; it is whether the *only* Khan disclosures Petitioner invokes to satisfy "single physical channel" are, by their own terms, implemented via different Walsh covers or different slots—approaches that Patent Owner's construction excludes and that Petitioner never reconciles with the claim language.

IPR2025-00219 Sur-Reply, 14

"DEMONSTRATIVE EXHIBIT - NOT EVIDENCE"

Zeira in view of Khan and Tong

- **2025-00217 (‘153)**
  - Ground #3 1-2, 4-5, 10-12, 14-15, 20 over Zeira in view of Baker, Khan, and Tong
  - Ground #4 3, 13 over Zeira in view of Baker, Khan, Tong, and Dick
- **2025-00219 (‘500)**
  - Ground #4 11, 15-17, 21 22 over Zeira in view of Khan and Tong
  - Ground #5 12-13, 18-19 over Zeira in view of Khan, Tong, and Baker
  - Ground #6 14, 20 over Zeira in view of Khan, Tong, and Dick

Zeira Does Not Receive The Alpha Value

The claim requires the UE to receive from the network an indication that TPC command accumulation is enabled. That is not satisfied by a step-size flag (Zeira) or a choice to aggregate over five slots (Baker). Those merely change how large or how often contributions are added; accumulation—the integrator that sums TPC effects—remains always on. Nor does Zeira disclose a network indication; α is a UE weighting of path-loss confidence and the only example (α=0) removes the open-loop term without any teaching of a BS-originated indication. Petitioner's theory never identifies a network signal to toggle accumulation on/off at the UE.

IPR2025-00217 POR, 51

That leap is not supported by record evidence. An operator's preference to use solely closed-loop by setting α to zero could be preprogrammed into a phone (UE) at the time the device is first provided to the user. There is no requirement in Zeira that an "indication" that α=0 be transmitted to the UE from the same network device that transmits the scheduling information and multi-level TPC command information as specified in the claim language. Nor is there any requirement in Zeira that an "indication" that α=0 be received by the UE from the same receiver that also receives the scheduling information and multi-level TPC command information from the network device, as required by the claim language. Dr. Lomp explains that Zeira's cited passage describes an operator preference but "does not explain any mechanism by which that choice would be conveyed to the UE," and that "nothing in Zeira identifies the UE as receiving an instruction from the Node-B to force α to zero." (EX2016, ¶138). The claim requires an indication received by the UE from a

IPR2025-00217 Sur-Reply, 21

Setting Alpha To Zero Doesn't Inherently Mean It Is Received From A Network Device

Zeira mentions that a network operator may desire to use solely open-loop or solely closed-loop power control, and may use solely closed-loop power control by setting the weighting factor α to zero. EX1004, 7:18-22; EX2016, ¶132-134. Practically, this means that when α = 0, L, the open-loop power control factor is given a weight of "0" and, accordingly, αL is zero'd out of the equation, leaving:

P_{TS}: $P_{TS} = P_0 + G(n) \cancel{+ \alpha L}$

EX1004, 5:67-6:4, 7:18-22; EX2016, ¶132-134. Zeira does not disclose, or even suggest, how the UE would be made aware that the weighting factor α is set to zero. The cited passage merely states that "the network operator may desire to use solely open-loop or closed-loop power control" (Ex. 1004, 7:16–22), but it provides no disclosure of any mechanism for communicating this information to the UE. Weighing heavily against this is that α is a dynamic weighting factor calculated locally at the UE. *See* § III.D.1 *infra*. Nothing in Zeira describes the UE receiving an indication, from the BS/Node-B, that α should be set to zero. This does not change the fact that Zeira does not say this, or the fact that α is calculated at the UE.

The combined closed loop/open loop power controller **108** controls the gain of the amplifier **74** to achieve the determined transmit power level, P_{TS}, for the communication. The power controlled communication is passed through the isolator **62** and radiated by the antenna **58**.

Equations 9 and 10 are another preferred combined closed loop/open loop power control algorithm.

$$P_{TS}=P_0+K(n) \qquad \text{Equation 9}$$

$$K(n)=K(n-1)+b_{TPC}\,\Delta_{TPC}+\alpha L \qquad \text{Equation 10}$$

K(n) is the combined closed loop/open loop factor. As shown, this factor includes both the closed loop and open loop power control aspects. Equations 4 and 5 segregate the two aspects.

Although the two above algorithms only weighted the open loop factor, the weighting may be applied to the closed loop factor or both the open and closed loop factors. Under certain conditions, the network operator may desire to use solely open loop or solely closed loop power control. For example, the operator may use solely closed loop power control by setting α to zero.

EX1004, 7:1-22

Setting Alpha To Zero Doesn't Turn Off Accumulation

Petitioner's Zeira theory ultimately depends on substituting a purported design-time "configuration" (the equation could be arranged to emphasize one term) for the claim-required event (the UE receives from the network device an indication that accumulation is enabled). (Reply, 20–24; ID, 13). Weighting a term to zero is not logically equivalent to enabling or disabling closed-loop accumulation, and Zeira's closed-loop term G(n) remains present and active in the disclosed combined-control equation. (EX2016, ¶¶135–137).

IPR2025-00217 Sur-Reply, 24

Zeira And Khan Are Fundamentally Different Architectures

As understood by a POSITA, and as reflected in Zeira, "assigned resource units" refer to a combination of time slots and spreading codes used for transmission. *See* Ex. 1004, 4:31–39; EX2016, ¶151. This is not the same as a scheduling grant as taught by Khan, which includes identification, rate, and HARQ control information transmitted dynamically by the BS to schedule uplink transmissions. See Ex. 1005, ¶¶ 13–15. Accordingly, while Petitioner tries to impart some meaning on the "assigned resource units," beyond the RRC signaling used in the underlying technology, this is not supported by Zeira or Khan and is not a reason to change the underlying RRC channel configuration functionality that would have been used by UMTS/TDD at the time. EX2016, ¶151.

IPR2025-00217 POR, 59

Zeira, and the UMTS TDD framework in which it operates, directly refutes this alleged benefit. In UMTS TDD/Zeira, uplink configuration is not conveyed by dynamic downlink grants, but rather by higher-layer **RRC signaling** procedures such as *Transport Channel Reconfiguration* and *Physical Channel Reconfiguration* in TS 25.331. *Id.*, ¶ 158. A POSITA would therefore not have equated uplink scheduling information with the Layer 1 control channel functions described in Zeira because the system architecture assigned that task to Layer 3 signaling. *Id.* In short, UMTS TDD handled uplink configuration fundamentally differently, and a skilled artisan would have recognized that scheduling information did not "naturally belong" on Zeira's dedicated TPC channel. *Id.*

IPR2025-00217 POR, 64-65

A POSITA would not combine the references to receive an “allocation”

As understood by a POSITA, and as reflected in Zeira, “assigned resource units” refer to a combination of time slots and spreading codes used for transmission. *See* Ex. 1004, 4:31–39; EX2016, ¶137. This is not the same as a scheduling grant as taught by Khan, which includes identification, rate, and HARQ control information transmitted dynamically by the BS to schedule uplink transmissions. See Ex. 1005, ¶¶ 13–15. Accordingly, while Petitioner tries to impart some meaning on the “assigned resource units,” beyond the RRC signaling used in the underlying technology, this is not supported by Zeira or Khan and is not a reason to change the underlying RRC channel configuration functionality that would have been used by UMTS/TDD at the time. EX2016, ¶137.

IPR2025-00219 POR, 54

The same defect is even more stark in the Zeira grounds. The Petition’s treatment of the “allocation” requirement in the Zeira context does not identify any allocation mechanism at all. Rather than pointing to any disclosure in Zeira (or any combined teaching with Khan) describing a network-issued allocation of an uplink resource, the Petition asserts at a high level that Zeira’s baseband processing “receive[s] intelligible data (such as an allocation of an uplink resource …)” by processing signals “in the time slots and with the appropriate codes assigned to the communication burst.” Petition, 53. That is not a citation to a disclosed “allocation” of an uplink resource. It is, at most, a description that communications use assigned codes and time slots—i.e., that a communication has been configured in some fashion. Petition, 53. But “assigned codes” for a “communication burst” are not, without more, an “allocation of an uplink resource” received by the UE on a single physical channel in the manner the claims require, nor do they identify any specific uplink resource that is then used “for” the recited uplink transmission. Petition, 53; Reply, 8.

IPR2025-00219 Sur-Reply, 3-4

"DEMONSTRATIVE EXHIBIT - NOT EVIDENCE"

The Only Reason To Combine The References Is To Use The Present Patents As A Guide For Cherry Picking Features

The same defect is even more stark in the Zeira grounds. The Petition's treatment of the "allocation" requirement in the Zeira context does not identify any allocation mechanism at all. Rather than pointing to any disclosure in Zeira (or any combined teaching with Khan) describing a network-issued allocation of an uplink resource, the Petition asserts at a high level that Zeira's baseband processing "receive[s] intelligible data (such as an allocation of an uplink resource …)" by processing signals "in the time slots and with the appropriate codes assigned to the communication burst." Petition, 53. That is not a citation to a disclosed "allocation" of an uplink resource. It is, at most, a description that communications use assigned codes and time slots—i.e., that a communication has been configured in some fashion. Petition, 53. But "assigned codes" for a "communication burst" are not, without more, an "allocation of an uplink resource" received by the UE on a single physical channel in the manner the claims require, nor do they identify any specific uplink resource that is then used "for" the recited uplink transmission. Petition, 53; Reply, 8.

IPR2025-00219 Sur-Reply, 3-4

Petitioner responded in the Reply (at 1, 8-9) by arguing that bodily incorporation is not required to establish obviousness, and Patent Owner properly countered in the Sur-Reply (at 3) that "Petitioner's Reply does not cure the 'allocation' defect." Even absent bodily incorporation, Petitioner still bears the burden of explaining why a person of ordinary skill in the art would combine the reference and *how they would arrive at the claimed invention*. In the Sur-Reply (at 1-4), Patent Owner properly explained that the Petitioner still failed to explain how a POSITA would have arrived at the claimed invention by failing to identify within the "fundamentally incompatible channel multiplexing structures" (POR, 32) of Andersson and Khan: "(1) what the "uplink resource" is in the asserted system, (2) what it means to "allocate" that resource, and (3) where, when, and how the UE receives the allocation such that the subsequent uplink transmission is 'on the allocated uplink resource." Sur-Reply, 1-4. Pointing out that this gap still remained, even absent bodily incorporation, was entirely appropriate.

Opposition to Strike, 2-3

"DEMONSTRATIVE EXHIBIT - NOT EVIDENCE"

Conclusion

All the Grounds Fail for the following reasons:

- Don't teach "to receive, from a network device, an indication that transmit power control (TPC) command accumulation is enabled" ('153 claim 1)
- Don't teach "receiving, by the UE, an indication from a network device that transmit power control (TPC) command accumulation is enabled" ('153 claim 11)
- Don't teach "to receive, from the network device, on a single physical channel, scheduling information and power control information that includes a multi-level TPC command" ('153 claim 1)
- Don't teach "receiving, by the UE on a single physical channel from the network device, scheduling" ('153 claim 11)

- Don't teach "to receive, on a single physical channel, an allocation of an uplink resource and a multi-level transmit power control (TPC) command" ('500 claim 11)
- Don't teach "receiving, by a user equipment (UE) on a single physical channel, an allocation of an uplink resource and a multi-level transmit power control (TPC) command;" ('500 claim 17)
- No motivation to combine teaching from different wireless standards (i.e. CDMA and WCDMA)