IN THE UNITED STATES DISTRICT COURT
FOR THE WESTERN DISTRICT OF TEXAS
WACO DIVISION

INTELLECTUAL VENTURES II LLC, Plaintiff, v. **TESLA, INC.,** Defendant.	Civil Action No. 6:24-cv-188-ADA **JURY TRIAL DEMANDED**

DEFENDANT TESLA, INC.'S ANSWER, AFFIRMATIVE DEFENSES, AND COUNTERCLAIMS TO PLAINTIFF INTELLECTUAL VENTURES II LLC'S COMPLAINT FOR PATENT INFRINGEMENT

Defendant Tesla, Inc. ("Tesla"), files this Answer and Affirmative Defenses to Intellectual Venture II, LLC's ("IV") Complaint ("Complaint"). Tesla responds to the allegations contained in the numbered paragraphs of IV's Complaint below. Tesla denies the allegations and characterizations in IV's Complaint and attached Exhibits unless expressly admitted in the following paragraphs.

NATURE OF THE ACTION[1]

1. This is a civil action for the infringement of United States Patent No. 7,336,805 ("the '805 Patent"), United States Patent No. 9,706,500 ("the '500 Patent"), United States Patent No. 10,292,138 ("the '138 Patent"), United States Patent No. 10,952,153 ("the '153 Patent"), United States Patent No. 8,898,395 ("the '395 Patent"), United States Patent No. 10,136,416 ("the '416 Patent"), United States Patent No. 7,916,180 ("the '180 Patent"), United States Patent

[1] Tesla repeats the headings set forth in the Complaint to simplify comparison of the Complaint and this Answer. In doing so, Tesla makes no admissions regarding the substance of the headings or any other allegations of the Complaint. Unless otherwise stated, to the extent that a particular heading can be construed as an allegation, Tesla specifically denies all such allegations.

No. 9,232,158 ("the '158 Patent"), United States Patent No. 7,181,743 ("the '743 Patent"), U.S. Patent No. 6,894,639 ("the '639 Patent"), United States Patent No. 11,206,670 ("the '670 Patent"), and United States Patent No. 11,664,889 ("the '889 Patent") (collectively, the "Patents-in- Suit") under the Patent Laws of the United States, 35 U.S.C. § 1 et seq.

ANSWER: Tesla admits that the Complaint purports to allege infringement of the Patents-in-Suit under the Patent Laws of the United States. Tesla denies that it infringes the Patents-in-Suit.

THE PARTIES

Intellectual Ventures

2. Plaintiff Intellectual Ventures II LLC ("Intellectual Ventures II") is a Delaware limited liability company having its principal place of business located at 3150 139th Avenue SE, Bellevue, Washington 98005.

ANSWER: Tesla is without knowledge or information sufficient to form a belief as to the truth of the allegations and characterizations in Paragraph 2, and Tesla therefore denies them.

3. Intellectual Ventures II is the owner of all rights, title, and interest in and to the '805, '500, '138, '153, '395, '416, '180, '158, '639, '670 and '889 Patents.

ANSWER: Tesla is without knowledge or information sufficient to form a belief as to the truth of the allegations and characterizations in Paragraph 3, and Tesla therefore denies them.

4. Intellectual Ventures II is the exclusive licensee of the '743 Patent, and holds all substantial rights therein, including the right to grant licenses, to exclude others, and to enforce and recover past damages for infringement of the '743 Patent.

ANSWER: Tesla is without knowledge or information sufficient to form a belief as to the truth of the allegations and characterizations in Paragraph 4, and Tesla therefore denies them.

Tesla

5. Upon information and belief, Defendant Tesla, Inc. is a Delaware corporation with its principal place of business at 1 Tesla Road, Austin, Texas 78725. Tesla may be served with process through its registered agent, CT Corporation, at 1999 Bryan Street, Suite 900, Dallas, Texas 75201-3136. Tesla is registered to do business in the State of Texas and has been since at least 2011. On information and belief, Tesla does business in the State of Texas and the Western District of Texas.

ANSWER: Tesla denies that it is a Delaware corporation. Tesla is headquartered in Austin, Texas, with a place of business at 1 Tesla Road, Austin, Texas 78725. Tesla admits that it has a registered agent at CT Corporation System, 1999 Bryan Street, Suite 900, Dallas, Texas, 75201. Tesla admits that it is registered to do business in the State of Texas. Texas admits it has done business in the State of Texas and the Western District of Texas. Tesla denies any remaining allegations and characterizations contained in Paragraph 5.

6. Upon information and belief, Tesla designs, develops, makes, manufactures, uses, distributes, imports, provides, markets, offers for sale, and/or sells in the State of Texas and the Western District of Texas automotive vehicles and components thereof ("Accused Products") that infringe the Patents-in-Suit, contribute to the infringement by others, and/or induces others to commit acts of patent infringement in the State of Texas and the Western District of Texas in connection with the Accused Products.

ANSWER: Tesla denies the allegations and characterizations of Paragraph 6.

7. On information and belief, Tesla has derived substantial revenue from infringing acts in the Western District of Texas, including from the sale and use of the Accused Products as described in more detail below.

ANSWER: Tesla denies the allegations and characterizations of Paragraph 7.

JURISDICTION AND VENUE

8. This is an action for patent infringement arising under the patent laws of the United States. This Court has subject matter jurisdiction pursuant to 28 U.S.C. §§ 1331 and 1338(a).

ANSWER: Tesla admits that the Complaint purports to assert patent infringement arising under the patent laws of the United States. Tesla admits that this Court has subject matter jurisdiction over actions arising under the patent laws of the United States pursuant to 28 U.S.C. §§ 1331 and 1338(a). Tesla denies that there is subject matter jurisdiction for this particular action because Tesla has not committed any infringing act related to any of the Patents-in-Suit.

9. This Court has personal jurisdiction over Tesla because Tesla conducts business in and has committed acts of patent infringement, contributed to infringement by others, and/or induced others to commit acts of patent infringement in this District, the State of Texas, and elsewhere in the United States and has established minimum contacts with this forum state such that the exercise of jurisdiction over Tesla would not offend the traditional notions of fair play and substantial justice. Upon information and belief, Tesla transacts substantial business with entities and individuals in the State of Texas and the Western District of Texas, by, among other things, importing, distributing, offering to sell, and selling products that infringe the Patents-in-Suit, including the infringing automotive vehicles and components thereof that Tesla purposefully directs into the State of Texas and this District as alleged herein, as well as by providing service and support to its customers in this District. Tesla places the accused automotive vehicles and components thereof into the stream of commerce with the knowledge and expectation that they will be sold in the State of Texas, including this District.

ANSWER: To the extent that Paragraph 9 implicates legal conclusions as opposed to allegations of fact, no response is required. Tesla admits that it has done business in the Western District of Texas, the state of Texas, and elsewhere in the United States. Tesla admits that it

provides service and support to customers in the Western District of Texas. Tesla denies that it has committed any infringing act, in the Western District of Texas or elsewhere, related to any of the Patents-in-Suit. Tesla denies any remaining allegations and characterizations contained in Paragraph 9.

10. Tesla is subject to this Court's general and specific jurisdiction pursuant to due process and/or the Texas Long Arm Statute due at least to Tesla's substantial business in the State of Texas and this District, including maintaining its principal place of business at 1 Tesla Road, Austin, Texas 78725, through its past infringing activities, because Tesla regularly does and solicits business herein, and/or because Tesla has engaged in persistent conduct and/or has derived substantial revenues from goods and services provided to customers in the State of Texas and this District.

ANSWER: To the extent Paragraph 10 of the Complaint implicates legal conclusions as opposed to allegations of fact, no response is required. Tesla admits that it has done business in the Western District of Texas, the state of Texas, and elsewhere in the United States. Tesla denies that it has committed any infringing act, in the Western District of Texas or elsewhere, related to any of the Patents-in-Suit. Tesla denies any remaining allegations and characterizations contained in Paragraph 10.

11. Venue is proper in this District pursuant to 28 U.S.C. §§ 1391(b)-(c) and 1400(b). For example, venue is proper in this District under 28 U.S.C. § 1400(b) because Tesla maintains its principal place of business at 1 Tesla Road, Austin, Texas 78725 in this District, and has committed acts of patent infringement in this District and/or have contributed to or induced acts of patent infringement by others in this District. In addition to its corporate headquarters at 1 Tesla Road, Austin, Texas 78725, Tesla also maintains several permanent physical places within this

District from which it conducts business relating to the Accused Products. For example, Tesla has stores and service centers in this District at least at the following locations: 500 E St Elmo Road, Austin, Texas 78745; 12845 Research Boulevard, Austin, Texas 78759; 11600 Century Oaks Terrace, Suite 123, Austin, Texas 78758; 7825 Helen of Troy Drive, El Paso, Texas 79912; 5865 E Hwy 290 Fredericksburg, Texas 78624; 23011 IH-10 West, San Antonio, Texas 78257; and 8320-8434 Airport Boulevard, San Antonio, Texas 78216.

ANSWER: To the extent Paragraph 11 implicates legal conclusions as opposed to allegations of fact, no response is required. Tesla admits that its global headquarters is located at 1 Tesla Road, Austin, Texas 78725. Tesla admits that it has other physical facilities in Texas. Tesla denies any remaining allegations and characterizations in Paragraph 11. Specifically, Tesla denies that Western District of Texas is an appropriate or convenient forum for this action. Tesla further denies that it has committed any infringing act, in the Western District of Texas or elsewhere, related to any of the Patents-in-Suit. Tesla denies any remaining allegations and characterizations contained in Paragraph 11.

12. Tesla is "at home" in this District, *see Daimler AG v. Bauman*, 571 U.S. 117, 127-30 (2014), because Tesla has admitted that its principal place of business is in this District. *See Sare v. Tesla, Inc., et al.*, No. 2:22-cv-00547-JAM-CKD, 2022 WL 2817422, at *2 (E.D. Cal. July 19, 2022). ("Defendant contends that it officially moved its global headquarters from Palo Alto, California to Austin, Texas on December 1, 2021, over two months before this action was filed… Defendant has met its burden of demonstrating through competent evidence that at the time this suit was filed, Tesla's principal place of business was in Austin, Texas, as that is where its high level officers directed, controlled, and coordinated the corporation's activities") (internal citations omitted). Tesla also manufactures the Accused Products within the Western District of Texas. For

example, Tesla manufactures its Model Y cars and Cybertrucks at its Gigafactory Texas plant located at 1 Tesla Road, Austin, Texas 78725 in the Western District of Texas.[2]

ANSWER: To the extent that Paragraph 12 implicates legal conclusions as opposed to allegations of fact, no response is required. Tesla admits that it has a manufacturing facility located at 1 Tesla Road, Austin, Texas 78725. Tesla admits that it manufactures some Model Y cars and Cybertrucks in the Western District of Texas. Tesla denies that any of its products, including Model Y cars or Cybertrucks, infringe any of the Patents-in-Suit. Tesla further denies that it manufactures any infringing products at this or any other facility. Tesla denies any remaining allegations and characterizations contained in Paragraph 12.

13. Tesla placed and/or contributed to placing the Accused Products into the stream of commerce knowing or understanding that such Accused Products would be imported into, sold, provided, distributed, and/or used in the United States, including in the Western District of Texas.

ANSWER: Tesla denies the allegations and characterizations of Paragraph 13.

14. The Austin Division is an appropriate venue for this case because, pursuant to Fed. R. Civ. P. 11(b)(3), Tesla has its headquarters in this division at 1 Tesla Road, Austin, TX 78725 and Tesla manufactures in this division the Accused Products, including the Model Y and Cybertruck vehicles.

ANSWER: To the extent that Paragraph 14 implicates legal conclusions as opposed to allegations of fact, no response is required. To the extent a response is required, Tesla responds that this case is pending in the Waco Division, not the Austin Division. Tesla denies any remaining allegations and characterizations contained in Paragraph 14.

---

[2] https://www.tesla.com/giga-texas ("Covering 2,500 acres along the Colorado River with over 10 million square feet of factory floor, Gigafactory Texas is a U.S. manufacturing hub for Model Y and the home of Cybertruck.") (last accessed April 10, 2024).

15. Upon information and belief, in December 2022 and January 2023 Tesla filed plans with the Texas Department of Licensing and Regulation to begin construction in 2023 of six additional campuses in Austin, Texas.[3] Tesla plans to spend more than $800 million to construct approximately 1.7 million square feet of additional space at these campuses.[4]

ANSWER: Tesla admits it filed plans with the Texas Department of Licensing and Regulation to make improvements and buildouts to the Gigafactory located in Austin, Texas. Tesla denies any remaining allegations and characterizations contained in Paragraph 15.

FACTUAL BACKGROUND

16. Intellectual Ventures Management, LLC ("Intellectual Ventures Management") was founded in 2000. Since then, Intellectual Ventures Management has been involved in the business of inventing. Intellectual Ventures Management facilitates invention by inventors and the filing of patent applications for those inventions, collaboration with others to develop and patent inventions, and the acquisition and licensing of patents from individual inventors, universities, corporations, and other institutions. A significant aspect of Intellectual Ventures Management's business is managing the Plaintiff in this case, Intellectual Ventures II.

ANSWER: Tesla is without knowledge or information sufficient to form a belief as to the truth of the allegations and characterizations in Paragraph 16, and Tesla therefore denies them.

17. One of the founders of Intellectual Ventures Management is Nathan Myhrvold, who worked at Microsoft from 1986 until 2000 in a variety of executive positions, culminating in his appointment as the company's first Chief Technology Officer ("CTO") in 1996. While at Microsoft, Dr. Myhrvold founded Microsoft Research in 1991 and was one of the world's foremost

[3] https://austin.culturemap.com/news/city-life/tesla-s-austin-headquarters-files-for-800-million-campus-expansion/ (last accessed April 8, 2024).
[4] *Id.*

software experts. Between 1986 and 2000, Microsoft became the world's largest technology company.

ANSWER: Tesla is without knowledge or information sufficient to form a belief as to the truth of the allegations and characterizations in Paragraph 17, and Tesla therefore denies them.

18. Under Dr. Myhrvold's leadership, Intellectual Ventures acquired more than 70,000 patents covering many important inventions of the Internet era. Many of these inventions coincided with Dr. Myhrvold's successful tenure at Microsoft.

ANSWER: Tesla is without knowledge or information sufficient to form a belief as to the truth of the allegations and characterizations in Paragraph 18, and Tesla therefore denies them.

19. One of the most significant accomplishments of the Internet era is the emergence of wireless technologies for vehicles. Wireless connectivity systems in vehicles enable communication channels within vehicles as well as with other external networks. Intellectual Ventures' Patents-In-Suit provide improvements to wireless communications used in vehicles.

ANSWER: Tesla is without knowledge or information sufficient to form a belief as to the truth of the allegations and characterizations in Paragraph 19, and Tesla therefore denies them.

20. According to its Form 10-K for the year ending December 31, 2022, Tesla asserts: "We design, develop, manufacture, sell and lease high-performance fully electric vehicles and energy generation and storage systems, and offer services related to our products. We generally sell our products directly to customers, and continue to grow our customer-facing infrastructure through a global network of vehicle service centers, Mobile Service, body shops, Supercharger stations and Destination Chargers to accelerate the widespread adoption of our products."[5]

[5] https://www.sec.gov/Archives/edgar/data/1318605/000095017023001409/tsla-20221231.htm#business (Tesla, Inc. Form 10-K, p. 4) (last accessed April 10, 2024).

ANSWER: Tesla admits that its Form 10-K for the year ending December 31, 2022, includes the language recited in Paragraph 20 of the Complaint.

21. Tesla provides several types of wireless communication system solutions and services to its customers. Tesla's product offerings include but are not limited to Standard Connectivity, Premium Connectivity, and infotainment systems, including connectivity features over Wi-Fi, maps and navigation and music streaming over Bluetooth®.[6] With Premium Connectivity, users have access to all connectivity features over cellular, in addition to Wi-Fi. Tesla markets and sells these wireless communication system solutions and services in several Tesla models throughout the world, including in the United States and Texas, as shown below:

Connectivity

Connectivity is an important part of all Tesla vehicles, further enhancing the driving experience by providing access to features that require data usage — including streaming music and media, live traffic visualization and more.

All Tesla vehicles come with access to Standard Connectivity. Standard Connectivity is included in your vehicle, at no additional cost, for eight years beginning on the first day your vehicle was delivered as new by Tesla or the first day it is put into service (for example, used as a demonstrator or service vehicle), whichever comes first. If you are purchasing a used vehicle, you will be notified of how long your vehicle will include access to Standard Connectivity. With Standard Connectivity, you have access to most connectivity features over Wi-Fi, in addition to basic maps and navigation and music streaming over Bluetooth®.

Premium Connectivity provides the ability to access all connectivity features over cellular, in addition to Wi-Fi, for the most intuitive and engaging ownership experience. Premium Connectivity is currently available as a monthly subscription of $9.99 plus applicable tax or as an annual subscription of $99 plus applicable tax and can be purchased at any time from your vehicle touchscreen or the Tesla app. Orders of Model S, Model X, Model Y, Model 3 and future variants of Cybertruck will receive a Premium Connectivity trial at delivery.

If you own a Tesla vehicle for personal use, you can subscribe to Premium Connectivity from your vehicle touchscreen or the Tesla app. If you are driving a company vehicle, contact your vehicle provider for more information.

Ex. 1, https://www.tesla.com/support/connectivity (last accessed April 10, 2024).

[6] https://www.tesla.com/support/connectivity (last accessed April 10, 2024).

Connectivity Packages

Connectivity Packages	Standard	Premium
Navigation	✓	✓
Live Traffic Visualization		✓
Sentry Mode - View Live Camera		✓
Satellite-View Maps		✓
Video Streaming**		✓
Caraoke*		✓
Music Streaming**		✓
Internet Browser*		✓

Features subject to change and may vary based on hardware configuration
*Currently available over Wi-Fi for Standard Connectivity
**A paid subscription to streaming services is required to access music and media streaming

For Model S, Model X and Cybertruck with second row display, this includes second row in-drive video streaming. Some features, such as Caraoke and video streaming, are not supported on some vehicles based on hardware configuration. Review your vehicle firmware release notes to confirm feature availability for your vehicle.

Ex. 1, https://www.tesla.com/support/connectivity (last accessed April 10, 2024).

Does Standard Connectivity include in-car maps and navigation functionality?

Yes. All vehicles with Standard Connectivity will continue to receive the same core maps & navigation functionality as vehicles with Premium Connectivity, including traffic-based routing, Trip Planner and Supercharger stall availability. Standard Connectivity is included in your vehicle, at no additional cost, for eight years beginning on the first day your vehicle was delivered as new by Tesla or the first day it is put into service (for example, used as a demonstrator or service vehicle), whichever comes first. If you are purchasing a used vehicle, you will be notified of how long your vehicle will include access to Standard Connectivity. Premium Connectivity will add satellite-view maps and live traffic visualization.

Ex. 1, https://www.tesla.com/support/connectivity (last accessed April 10, 2024).

What music & media are available with Standard Connectivity?

Standard Connectivity offers Bluetooth® pairing, FM radio, Sirius XM capability in North America (for XM-enabled and configured vehicles) and playback from a USB drive.

Premium Connectivity is required for in-car streaming music & media over cellular.

A paid subscription to third-party streaming services is required to access music and media streaming for both Standard and Premium Connectivity.

Mobile App

The Tesla mobile app allows you to communicate with Model 3 remotely using your iPhone® or Android™ phone.

To Use the Mobile App

To set up the Tesla mobile app to communicate with your Model 3:

1. Download the Tesla mobile app to your phone.
2. Log in to the Tesla mobile app by entering your Tesla account credentials.
3. Enable mobile access to your Model 3 by touching **Controls > Safety > Allow Mobile Access**.
4. Turn your phone's Bluetooth setting **ON** and ensure that Bluetooth is turned on within your phone's global settings for the Tesla mobile app. For example, on your phone, navigate to Settings, choose the Tesla mobile app, and ensure the Bluetooth setting is enabled.

Your phone and vehicle must both be actively connected to cellular service or Wi-Fi for the mobile app to communicate with your vehicle. Tesla recommends that you always have a functional physical key readily available if parking in an area with limited or absent cellular service, such as an indoor parking garage.

Ex. 2, https://www.tesla.com/ownersmanual/model3/en_us/GUID-F6E2CD5E-F226-4167-AC48-BD021D1FFDAB.html (last accessed April 10, 2024).

Overview

When both your phone and the vehicle have internet service, the Tesla mobile app's home screen allows you to:

- Lock or unlock your vehicle.
- Enable or disable the heating or air conditioning and monitor the cabin climate.
- Check your vehicle's charging information. Charging details also appear when a charging cable is plugged in.
- Open or close the charge port.
- See where your vehicle is located.
- View your vehicle's estimated range.
- Open the front trunk.
- View your vehicle's odometer, VIN, and current software version.

Media settings appear on the mobile app to pause, play, rewind, fast forward, and adjust the volume of the media currently playing in the vehicle. You may need to enable Media settings by touching **Audio Settings > Options > Allow Mobile Control**.

For supported video sources, send videos to Tesla Theater by sharing the link through the mobile app. Navigate to the movie, show, or video you want to play on your phone and touch the share button. Share the video with the Tesla app and it appears on the touchscreen if Model 3 is in Park.

Ex. 2, https://www.tesla.com/ownersmanual/model3/en_us/GUID-F6E2CD5E-F226-4167-AC48-BD021D1FFDAB.html (last accessed April 10, 2024).

ANSWER: Tesla admits that it sells vehicles with wireless capability. Tesla admits that it sells vehicles throughout the world, including in the United Sates and the Western District of Texas. To the extent the allegations of Paragraph 21 purport to characterize the contents of

written documents or publications, those documents and publications speak for themselves. Tesla denies any remaining allegations and characterizations in Paragraph 21.

22. Tesla also provides an Autopilot feature that it describes as an advanced driver assistance system to enhance safety and convenience for the driver and to reduce the overall workload of the driver.[7] Each new Tesla vehicle is equipped with multiple external cameras and powerful vision processing to provide an additional layer of safety. Tesla markets and sells these autopilot features in Tesla models throughout the world, including in the United States and Texas, as shown below:

Autopilot and Full Self-Driving Capability

Autopilot is an advanced driver assistance system that enhances safety and convenience behind the wheel. When used properly, Autopilot reduces your overall workload as a driver. Each new Tesla vehicle is equipped with multiple external cameras and powerful vision processing to provide an additional layer of safety. All vehicles built for the North American market now use our camera-based Tesla Vision to deliver Autopilot features, rather than radar.

Autopilot comes standard on every new Tesla. For owners who took delivery of their vehicle without Autopilot, there are multiple packages available for purchase, depending on when your vehicle was built: Autopilot, Enhanced Autopilot and Full Self-Driving Capability.

Autopilot, Enhanced Autopilot and Full Self-Driving Capability are intended for use with a fully attentive driver, who has their hands on the wheel and is prepared to take over at any moment. While these features are designed to become more capable over time, the currently enabled features do not make the vehicle autonomous.

Ex. 3, https://www.tesla.com/support/autopilot (last accessed April 10, 2024).

[7] https://www.tesla.com/support/autopilot (last accessed April 10, 2024).

Autopilot

Autopilot includes the following functionality and features:

- **Traffic-Aware Cruise Control:** Matches the speed of your vehicle to that of the surrounding traffic
- **Autosteer:** Assists in steering within a clearly marked lane, and uses traffic-aware cruise control

Ex. 3, https://www.tesla.com/support/autopilot (last accessed April 10, 2024).

Enhanced Autopilot

In addition to the functionality and features of Autopilot, Enhanced Autopilot also includes:

- **Navigate on Autopilot:** Actively guides your vehicle from a highway's on-ramp to off-ramp, including suggesting lane changes, navigating interchanges, automatically engaging the turn signal and taking the correct exit.
- **Auto Lane Change:** Assists in moving to an adjacent lane on the highway when Autosteer is engaged.
- **Autopark:** Helps automatically parallel or perpendicular park your vehicle, with a single touch.
- **Summon:** Moves your vehicle in and out of a tight space using the mobile app or key.
- **Smart Summon:** Your vehicle will navigate more complex environments and parking spaces, maneuvering around objects as necessary to come find you in a parking lot.

Ex. 3, https://www.tesla.com/support/autopilot (last accessed April 10, 2024).

Full Self-Driving Capability

Your vehicle will be able to drive itself almost anywhere with minimal driver intervention and will continuously improve. In addition to the functionality and features of Autopilot and Enhanced Autopilot, Full Self-Driving Capability also includes:

- **Autosteer on City Streets**
- **Traffic and Stop Sign Control:** Identifies stop signs and traffic lights and automatically slows your vehicle to a stop on approach, with your active supervision

The currently enabled Autopilot, Enhanced Autopilot and Full Self-Driving features require active driver supervision and do not make the vehicle autonomous. Full autonomy will be dependent on achieving reliability far in excess of human drivers as demonstrated by billions of miles of experience, as well as regulatory approval, which may take longer in some jurisdictions. As Tesla's Autopilot, Enhanced Autopilot and Full Self-Driving capabilities evolve, your vehicle will be continuously upgraded through over-the-air software updates.

Ex. 3, https://www.tesla.com/support/autopilot (last accessed April 10, 2024).

Your Model 3 includes the following Autopilot components that actively monitor the surrounding roadway:

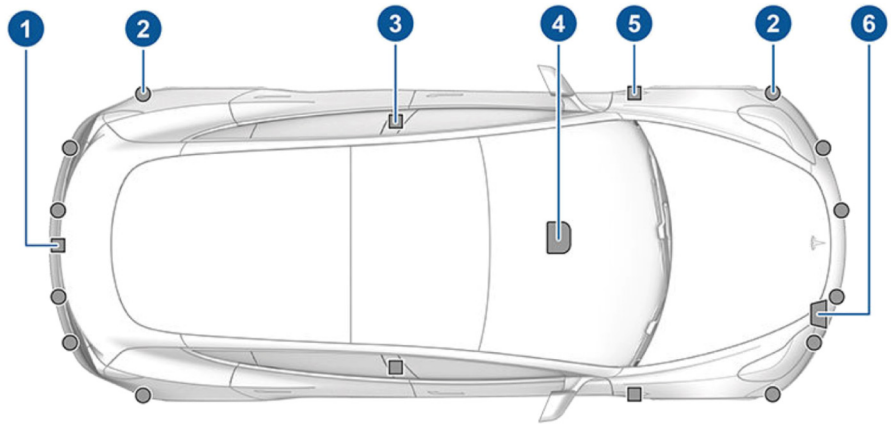

1. A camera is mounted above the rear license plate.
2. Ultrasonic sensors are located in the front and rear bumpers.
3. A camera is mounted in each door pillar.
4. Three cameras are mounted to the windshield above the rear view mirror.
5. A camera is mounted to each front fender.
6. Radar is mounted behind the front bumper.

Ex. 4, https://www.greencarreports.com/news/1137379_tesla-bets-on-camera-sensing-dropsultrasonic-sensors-pauses-features (last accessed April 10, 2024).

Your Model 3 includes the following components that actively monitor the surrounding area:

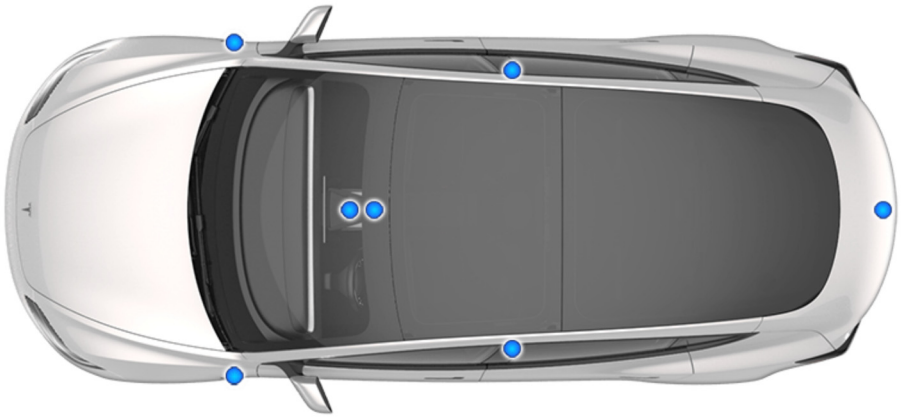

- A camera is mounted above the rear license plate.
- A camera is mounted in each door pillar.
- Two cameras are mounted to the windshield above the rear view mirror.
- A camera is mounted to each front fender.

Model 3 is also equipped with high precision electronically-assisted braking and steering systems.

Ex. 5, https://www.tesla.com/ownersmanual/model3/en_us/GUID-682FF4A7-D083-4C95-925A-5EE3752F4865.html (last accessed April 10, 2024).

How does Autopilot work?
Built on a deep neural network, Autopilot uses cameras, ultrasonic sensors and radar to see and sense the environment around the car. This robust sensor and camera suite provides drivers with an awareness of their surroundings that a driver alone would not otherwise have. A powerful onboard computer processes these inputs in a matter of milliseconds to help make your driving safer and less stressful.

Ex. 6, https://www.tesla.com/support/autopilot#capability-features (last accessed April 10, 2024).

How does Autopilot work?
As of mid-February 2022, all vehicles built for the North American market will feature Tesla Vision, which uses multiple cameras and powerful neural net processing to see the environment around the vehicle and deliver Autopilot features. This camera suite provides occupants with an awareness of their surroundings that a driver alone would not otherwise have. A powerful onboard computer processes these inputs in a matter of milliseconds to help make driving safer and less stressful.

Ex. 6, https://www.tesla.com/support/autopilot#capability-features (last accessed April 10, 2024).

Every few milliseconds, new input frames are received through a dedicated image signal processor where they get preprocessed before being stored in the DRAM. Once new frames are available in the main memory, the CPUs instruct the NNA accelerators to start processing them. The accelerators control the data and parameters streaming into their local SRAM, as well as the results streaming back to the DRAM. Once the corresponding result frames have been sent out to the DRAM, the accelerators trigger an interrupt back to the CPU complex. The GPU is available for any postprocessing

Source: Compute Solution for Tesla's Full Self-Driving Computer, Autopilot Hardware, Tesla, Feb 2020.

ANSWER: Tesla admits that it sells vehicles that include and/or support Autopilot capabilities. Tesla admits that it sells vehicles having cameras. Tesla admits that it sells vehicles throughout the world, including in the United Sates and the Western District of Texas. To the extent the allegations of Paragraph 22 purport to characterize the contents of written documents or publications, those documents and publications speak for themselves. Tesla denies any remaining allegations and characterizations in Paragraph 22.

THE PATENTS-IN-SUIT

United States Patent No. 7,336,805

23. On February 26, 2008, the PTO issued the '805 Patent, titled "Docking Assistant." The '805 Patent is valid and enforceable. A copy of the '805 Patent is attached as Exhibit 7.

ANSWER: Tesla admits that the '805 Patent is titled "Docking Assistant" and lists the issue date on the face of the patent as February 26, 2008. Tesla admits that a purported copy of the '805 Patent is attached as Exhibit 7 to the Complaint. Tesla denies any remaining allegations and characterizations in Paragraph 23.

24. Intellectual Ventures II is the owner of all rights, title, and interest in and to the '805 Patent, and holds all substantial rights therein, including the right to grant licenses, to exclude others, and to enforce and recover past damages for infringement of the '805 Patent.

ANSWER: Tesla is without knowledge or information sufficient to form a belief as to the truth of the allegations and characterizations in Paragraph 24, and Tesla therefore denies them.

United States Patent No. 9,706,500

25. On July 11, 2017, the PTO issued the '500 Patent, titled "Power Control in a Wireless Network." The '500 Patent is valid and enforceable. A copy of the '500 Patent is attached as Exhibit 8.

ANSWER: Tesla admits that the '500 Patent is titled "Power Control in a Wireless Network" and lists the issue date on the face of the patent as July 11, 2017. Tesla admits that a purported copy of the '500 Patent is attached as Exhibit 8 to the Complaint. Tesla denies any remaining allegations and characterizations in Paragraph 25.

26. Intellectual Ventures II is the owner of all rights, title, and interest in and to the '500 Patent, and holds all substantial rights therein, including the right to grant licenses, to exclude others, and to enforce and recover past damages for infringement of the '500 Patent.

ANSWER: Tesla is without knowledge or information sufficient to form a belief as to the truth of the allegations and characterizations in Paragraph 26, and Tesla therefore denies them.

United States Patent No. 10,292,138

27. On May 14, 2019, the PTO issued the '138 Patent, titled "Determining Buffer Occupancy and Selecting Data for Transmission on a Radio Bearer." The '138 Patent is valid and enforceable. A copy of the '138 Patent is attached as Exhibit 9.

ANSWER: Tesla admits that the '138 Patent is titled "Determining Buffer Occupancy and Selecting Data for Transmission on a Radio Bearer" and lists the issue date on the face of the patent as May 14, 2019. Tesla admits that a purported copy of the '138 Patent is attached as Exhibit 9 to the Complaint. Tesla denies any remaining allegations and characterizations in Paragraph 27.

28. Intellectual Ventures II is the owner of all rights, title, and interest in and to the '138 Patent, and holds all substantial rights therein, including the right to grant licenses, to exclude others, and to enforce and recover past damages for infringement of the '138 Patent.

ANSWER: Tesla is without knowledge or information sufficient to form a belief as to the truth of the allegations and characterizations in Paragraph 28, and Tesla therefore denies them.

United States Patent No. 10,952,153

29. On March 16, 2021, the PTO issued the '153 Patent, titled "Power Control in a Wireless Network." The '153 Patent is valid and enforceable. A copy of the '153 Patent is attached as Exhibit 10.

ANSWER: Tesla admits that the '153 Patent is titled "Power Control in a Wireless Network" and lists the issue date on the face of the patent as March 16, 2021. Tesla admits that a

purported copy of the ’153 Patent is attached as Exhibit 10 to the Complaint. Tesla denies any remaining allegations and characterizations in Paragraph 29.

30. Intellectual Ventures II is the owner of all rights, title, and interest in and to the ’153 Patent, and holds all substantial rights therein, including the right to grant licenses, to exclude others, and to enforce and recover past damages for infringement of the ’153 Patent.

ANSWER: Tesla is without knowledge or information sufficient to form a belief as to the truth of the allegations and characterizations in Paragraph 30, and Tesla therefore denies them.

United States Patent No. 8,898,395

31. On November 25, 2014, the PTO issued the ’395 Patent, titled “Memory Management for Cache Consistency.” The ’395 Patent is valid and enforceable. A copy of the ’395 Patent is attached as Exhibit 11.

ANSWER: Tesla admits that the ’395 Patent is titled “Memory Management for Cache Consistency” and lists the issue date on the face of the patent as November 25, 2014. Tesla admits that a purported copy of the ’395 Patent is attached as Exhibit 11 to the Complaint. Tesla denies any remaining allegations and characterizations in Paragraph 31.

32. Intellectual Ventures II is the owner of all rights, title, and interest in and to the ’395 Patent, and holds all substantial rights therein, including the right to grant licenses, to exclude others, and to enforce and recover past damages for infringement of the ’395 Patent.

ANSWER: Tesla is without knowledge or information sufficient to form a belief as to the truth of the allegations and characterizations in Paragraph 32, and Tesla therefore denies them.

United States Patent No. 10,136,416

33. On November 20, 2018, the PTO issued the ’416 Patent, titled “Communicating on a Shared Channel in a Wireless Network.” The ’416 Patent is valid and enforceable. A copy of the ’416 Patent is attached as Exhibit 12.

ANSWER: Tesla admits that the ’416 Patent is titled “Communicating on a Shared Channel in a Wireless Network” and lists the issue date on the face of the patent as November 20, 2018. Tesla admits that a purported copy of the ’416 Patent is attached as Exhibit 12 to the Complaint. Tesla denies any remaining allegations and characterizations in Paragraph 33.

34. Intellectual Ventures II is the owner of all rights, title, and interest in and to the ’416 Patent, and holds all substantial rights therein, including the right to grant licenses, to exclude others, and to enforce and recover past damages for infringement of the ’416 Patent.

ANSWER: Tesla is without knowledge or information sufficient to form a belief as to the truth of the allegations and characterizations in Paragraph 34, and Tesla therefore denies them.

United States Patent No. 7,916,180

35. On March 29, 2011, the PTO issued the ’180 Patent, titled “Simultaneous Multiple Field of View Digital Cameras.” The ’180 Patent is valid and enforceable. A copy of the ’180 Patent is attached as Exhibit 13.

ANSWER: Tesla admits that the ’180 Patent is titled “Simultaneous Multiple Field of View Digital Cameras” and lists the issue date on the face of the patent as March 29, 2011. Tesla admits that a purported copy of the ’180 Patent is attached as Exhibit 13 to the Complaint. Tesla denies any remaining allegations and characterizations in Paragraph 35.

36. Intellectual Ventures II is the owner of all rights, title, and interest in and to the ’180 Patent, and holds all substantial rights therein, including the right to grant licenses, to exclude others, and to enforce and recover past damages for infringement of the ’180 Patent.

ANSWER: Tesla is without knowledge or information sufficient to form a belief as to the truth of the allegations and characterizations in Paragraph 36, and Tesla therefore denies them.

United States Patent No. 9,232,158

37. On January 5, 2016, the PTO issued the ’158 Patent, titled “Large Dynamic Range Cameras.” The ’158 Patent is valid and enforceable. A copy of the ’158 Patent is attached as Exhibit 14.

ANSWER: Tesla admits that the ’158 Patent is titled “Large Dynamic Range Cameras” and lists the issue date on the face of the patent as January 5, 2016. Tesla admits that a purported copy of the ’158 Patent is attached as Exhibit 14 to the Complaint. Tesla denies any remaining allegations and characterizations in Paragraph 37.

38. Intellectual Ventures II is the owner of all rights, title, and interest in and to the ’158 Patent, and holds all substantial rights therein, including the right to grant licenses, to exclude others, and to enforce and recover past damages for infringement of the ’158 Patent.

ANSWER: Tesla is without knowledge or information sufficient to form a belief as to the truth of the allegations and characterizations in Paragraph 38, and Tesla therefore denies them.

United States Patent No. 7,181,743

39. On February 20, 2007, the PTO issued the ’743 Patent, titled “Resource Allocation Decision Function for Resource Management Architecture and Corresponding Programs Therefor.” The ’743 Patent is valid and enforceable. A copy of the ’743 Patent is attached as Exhibit 15.

ANSWER: Tesla admits that the ’743 Patent is titled “Resource Allocation Decision Function for Resource Management Architecture and Corresponding Programs Therefor” and lists the issue date on the face of the patent as February 20, 2007. Tesla admits that a purported copy of the ’743 Patent is attached as Exhibit 15 to the Complaint. Tesla denies any remaining allegations and characterizations in Paragraph 39.

40. Intellectual Ventures II is the exclusive licensee of the ’743 Patent, and holds all substantial rights therein, including the right to grant licenses, to exclude others, and to enforce and recover past damages for infringement of the ’743 Patent.

ANSWER: Tesla is without knowledge or information sufficient to form a belief as to the truth of the allegations and characterizations in Paragraph 40, and Tesla therefore denies them.

United States Patent No. 6,894,639

41. On May 17, 2005, the PTO issued the ’639 Patent, titled “Generalized Hebbian Learning for Principal Component Analysis and Automatic Target Recognition, Systems and Method.” The ’639 Patent is valid and enforceable. A copy of the ’639 Patent is attached as Exhibit 16.

ANSWER: Tesla admits that the ’639 Patent is titled “Generalized Hebbian Learning for Principal Component Analysis and Automatic Target Recognition, Systems and Method” and lists the issue date on the face of the patent as May 17, 2005. Tesla admits that a purported copy of the ’639 Patent is attached as Exhibit 16 to the Complaint. Tesla denies any remaining allegations and characterizations in Paragraph 41.

42. Intellectual Ventures II is the owner of all rights, title, and interest in and to the ’639 Patent, and holds all substantial rights therein, including the right to grant licenses, to exclude others, and to enforce and recover past damages for infringement of the ’639 Patent.

ANSWER: Tesla is without knowledge or information sufficient to form a belief as to the truth of the allegations and characterizations in Paragraph 42, and Tesla therefore denies them.

United States Patent No. 11,206,670

43. On December 21, 2021, the PTO issued the '670 Patent, titled "Communication in a Wireless Network Using Restricted Bandwidths." The '670 Patent is valid and enforceable. A copy of the '670 Patent is attached as Exhibit 17.

ANSWER: Tesla admits that the '670 Patent is titled "Communication in a Wireless Network Using Restricted Bandwidths" and lists the issue date on the face of the patent as December 21, 2021. Tesla admits that a purported copy of the '670 Patent is attached as Exhibit 17 to the Complaint. Tesla denies any remaining allegations and characterizations in Paragraph 43.

44. Intellectual Ventures II is the owner of all rights, title, and interest in and to the '670 Patent, and holds all substantial rights therein, including the right to grant licenses, to exclude others, and to enforce and recover past damages for infringement of the '670 Patent.

ANSWER: Tesla is without knowledge or information sufficient to form a belief as to the truth of the allegations and characterizations in Paragraph 44, and Tesla therefore denies them.

United States Patent No. 11,664,889

45. On May 30, 2023, the PTO issued the '889 Patent, titled "Communications in a Wireless Network." The '889 Patent is valid and enforceable. A copy of the '889 Patent is attached as Exhibit 18.

ANSWER: Tesla admits that the '889 Patent is titled "Communications in a Wireless Network" and lists the issue date on the face of the patent as May 30, 2023. Tesla admits that a

purported copy of the ’889 Patent is attached as Exhibit 17 to the Complaint. Tesla denies any remaining allegations and characterizations in Paragraph 45.

46. Intellectual Ventures II is the owner of all rights, title, and interest in and to the ’889 Patent, and holds all substantial rights therein, including the right to grant licenses, to exclude others, and to enforce and recover past damages for infringement of the ’889 Patent.

ANSWER: Tesla is without knowledge or information sufficient to form a belief as to the truth of the allegations and characterizations in Paragraph 46, and Tesla therefore denies them.

COUNT I

(Tesla’s Infringement of U.S. Patent No. 7,336,805)

47. Answers to Paragraphs 1 through 46 are incorporated by reference as if fully set forth herein.

ANSWER: Tesla incorporates herein its responses to the allegations set forth above in Paragraphs 1 through 46.

48. **Direct Infringement.** Defendant directly infringed, and continues to directly infringe, literally and/or by the doctrine of equivalents, individually and/or jointly, the ’805 Patent, by designing, developing, making, manufacturing, utilizing, distributing, providing, testing, selling, and/or offering for sale and/or importing into the United States the Accused Products that infringe the ’805 Patent including, but not limited to, Tesla automotive vehicles, and all past, current and future Tesla products that operate in the same or substantially similar manner as the specifically identified products and components (collectively, “Example Count I Automotive Vehicles”). The Accused Products identified in the example charts incorporated in Example Count I Automotive Vehicles infringe at least the exemplary claims of the ’805 Patent identified in the charts incorporated into this Count I (the “Example ’805 Patent Claims”) literally and/or by the doctrine of equivalents.

ANSWER: Tesla denies the allegations and characterizations of Paragraph 48.

49. On information and belief, Defendant has also infringed and continues to directly infringe, literally and/or under the doctrine of equivalents, the Exemplary '805 Patent Claims, by internal testing and use of the Example Count I Automotive Vehicles.

ANSWER: Tesla denies the allegations and characterizations of Paragraph 49.

50. **Willful Blindness.** Defendant knew of the '805 Patent, or should have known of the '805 Patent, but was willfully blind to its existence. Defendant has had actual knowledge of the '805 Patent not later than receipt of a letter, dated August 7, 2020, and received on the same date. Defendant also has had actual knowledge of the '805 Patent not later than receipt of a letter, dated April 11, 2024, and received on the same date. By the time of trial, Defendant will have known and intended (since receiving such notice) that its continued actions would infringe and actively induce and contribute to the infringement of one or more claims of the '805 Patent. See Exhibits 19 & 20.

ANSWER: Tesla admits the '805 Patent was listed in letters purportedly sent to Tesla on August 7, 2020 (Exhibit 19) and April 11, 2024 (Exhibit 20). Tesla denies the remaining allegations and characterizations of Paragraph 50. Further, Tesla denies the allegations and characterizations set forth in Exhibits 19 and 20.

51. **Induced Infringement.** Defendant has also induced, and continues to induce, the infringement of the '805 Patent by others – including, but not limited to, inducing their consumers, partners, vendors, and/or third parties to use their Accused Products, such as Example Count I Automotive Vehicles, in an infringing manner as described above, including encouraging and instructing their consumers, partners, vendors, and/or third parties to infringe the '805 Patent.

ANSWER: Tesla denies the allegations and characterizations of Paragraph 51.

52. Defendant therefore actively, knowingly, and intentionally has committed, and continues to commit, affirmative acts that cause infringement, literally and/or by the doctrine of equivalents, of one or more claims of the ’805 Patent with knowledge of the ’805 Patent and knowledge that the induced acts constitute infringement of one or more claims of the ’805 Patent. Defendant has actively induced others, including, but not limited to, consumers, partners, vendors, and/or third parties, who use the Example Count I Automotive Vehicles to infringe the ’805 Patent, literally and/or by the doctrine of equivalents, throughout the United States, including within this District, by, among other things, advertising, promoting, and instructing the infringing use of the Example Count I Automotive Vehicles.

ANSWER: Tesla denies the allegations and characterizations of Paragraph 52.

53. **Contributory Infringement.** Defendant actively, knowingly, and intentionally has committed, and continues to commit contributory infringement, literally and/or by the doctrine of equivalents, by, inter alia, knowingly providing software and technologies that when used, cause the direct infringement of one or more claims of the ’805 Patent by their consumers, partners, vendors, and/or third parties, and which have no substantial non-infringing uses, or include a separate and distinct technology that is especially made or especially adapted for use in infringement of the ’805 Patent, and is not a staple article or commodity of commerce suitable for substantial non-infringing use.

ANSWER: Tesla denies the allegations and characterizations of Paragraph 53.

54. Defendant therefore actively, knowingly, and intentionally has been and continues to materially contribute to their consumers’, partners’, vendors’, and/or third-parties’ infringement of the ’805 Patent, literally and/or by the doctrine of equivalents, by designing, developing, making, manufacturing, utilizing, distributing, providing, testing, selling, and/or offering for sale

and/or importing into the United States the Example Count I Automotive Vehicles for use in a manner that infringes one or more claims of the ’805 Patent. Example Count I Automotive Vehicles are especially made or adapted for infringing the ’805 Patent and have no substantial non-infringing use.

ANSWER: Tesla denies the allegations and characterizations of Paragraph 54.

55. Exhibit 21 (claim charts) includes the Example Count I Automotive Vehicles and Example ’805 Patent Claims. As set forth in these charts, the Example Count I Automotive Vehicles practice the technology claimed by the ’805 Patent. Accordingly, the Example Count I Automotive Vehicles incorporated in these charts satisfy all elements of the Example ’805 Patent Claims.

ANSWER: Tesla denies the allegations and characterizations of Paragraph 55 and those set forth in Exhibit 21 to the Complaint.

56. Intellectual Ventures therefore incorporates by reference in its allegations herein the claim charts of Exhibit 21.

ANSWER: Tesla denies the allegations and characterizations set forth in Exhibit 21 to the Complaint.

57. Intellectual Ventures is entitled to recover damages adequate to compensate for Defendant’s infringement of the ’805 Patent and will continue to be damaged by such infringement. Intellectual Ventures is entitled to recover damages from Defendant to compensate them for Defendant’s infringement, as alleged above, in an amount measured by no less than a reasonable royalty under 35 U.S.C. § 284, as well as enhanced damages pursuant to 35 U.S.C. § 284.

ANSWER: Tesla denies the allegations and characterizations of Paragraph 57.

58. Further, Defendant's infringement of Intellectual Ventures's rights under the '805 Patent will continue to damage Intellectual Ventures's business, causing irreparable harm for which there is no adequate remedy at law, unless enjoined by the Court.

ANSWER: Tesla denies the allegations and characterizations of Paragraph 58.

59. As a result of Defendant's acts of infringement, Plaintiff has suffered and will continue to suffer damages in an amount to be proven at trial.

ANSWER: Tesla denies the allegations and characterizations of Paragraph 59.

COUNT II

(Tesla's Infringement of U.S. Patent No. 11,206,670)

60. Answers to Paragraphs 1 through 59 are incorporated by reference as if fully set forth herein.

ANSWER: Tesla incorporates herein its responses to the allegations set forth above in Paragraphs 1 through 59.

61. **Direct Infringement.** Defendant directly infringed, and continues to directly infringe, literally and/or by the doctrine of equivalents, individually and/or jointly, the '670 Patent, by designing, developing, making, manufacturing, utilizing, distributing, providing, testing, selling, and/or offering for sale and/or importing into the United States the Accused Products that infringe the '670 Patent including, but not limited to, Tesla automotive vehicles, and all past, current and future Tesla products that operate in the same or substantially similar manner as the specifically identified products and components (collectively, "Example Count II Automotive Vehicles"). The Accused Products identified in the example charts incorporated in Example Count II Automotive Vehicles infringe at least the exemplary claims of the '670 Patent identified in the charts incorporated into this Count II (the "Example '670 Patent Claims") literally and/or by the doctrine of equivalents.

ANSWER: Tesla denies the allegations and characterizations of Paragraph 61.

62. On information and belief, Defendant has also infringed and continues to directly infringe, literally and/or under the doctrine of equivalents, the Exemplary ’670 Patent Claims, by internal testing and use of the Example Count II Automotive Vehicles.

ANSWER: Tesla denies the allegations and characterizations of Paragraph 62.

63. **Willful Blindness.** Defendant knew of the ’670 Patent, or should have known of the ’670 Patent, but was willfully blind to its existence. Defendant has had actual knowledge of the ’670 Patent not later than receipt of a letter, dated April 11, 2024, and received on the same date. By the time of trial, Defendant will have known and intended (since receiving such notice) that its continued actions would infringe and actively induce and contribute to the infringement of one or more claims of the ’670 Patent. See Exhibit 20.

ANSWER: Tesla admits the ’670 Patent was listed in a letter purportedly sent to Tesla on April 11, 2024 (Exhibit 20). Tesla denies the remaining allegations and characterizations of Paragraph 63. Further, Tesla denies the allegations and characterizations set forth in Exhibit 20.

64. **Induced Infringement.** Defendant has also induced, and continues to induce, the infringement of the ’670 Patent by others – including, but not limited to, inducing their consumers, partners, vendors, and/or third parties to use their Accused Products, such as Example Count II Automotive Vehicles, in an infringing manner as described above, including encouraging and instructing their consumers, partners, vendors, and/or third parties to infringe the ’670 Patent.

ANSWER: Tesla denies the allegations and characterizations of Paragraph 64.

65. Defendant therefore actively, knowingly, and intentionally has committed, and continues to commit, affirmative acts that cause infringement, literally and/or by the doctrine of equivalents, of one or more claims of the ’670 Patent with knowledge of the ’670 Patent and

knowledge that the induced acts constitute infringement of one or more claims of the ’670 Patent. Defendant has actively induced others, including, but not limited to, consumers, partners, vendors, and/or third parties, who use the Example Count II Automotive Vehicles to infringe the ’670 Patent, literally and/or by the doctrine of equivalents, throughout the United States, including within this District, by, among other things, advertising, promoting, and instructing the infringing use of the Example Count II Automotive Vehicles.

ANSWER: Tesla denies the allegations and characterizations of Paragraph 65.

66. Contributory Infringement. Defendant actively, knowingly, and intentionally has committed, and continues to commit contributory infringement, literally and/or by the doctrine of equivalents, by, inter alia, knowingly providing software and technologies that when used, cause the direct infringement of one or more claims of the ’670 Patent by their consumers, partners, vendors, and/or third parties, and which have no substantial non-infringing uses, or include a separate and distinct technology that is especially made or especially adapted for use in infringement of the ’670 Patent, and is not a staple article or commodity of commerce suitable for substantial non-infringing use.

ANSWER: Tesla denies the allegations and characterizations of Paragraph 66.

67. Defendant therefore actively, knowingly, and intentionally has been and continues to materially contribute to their consumers’, partners’, vendors’, and/or third-parties’ infringement of the ’670 Patent, literally and/or by the doctrine of equivalents, by designing, developing, making, manufacturing, utilizing, distributing, providing, testing, selling, and/or offering for sale and/or importing into the United States the Example Count II Automotive Vehicles for use in a manner that infringes one or more claims of the ’670 Patent. Example Count II Automotive

Vehicles are especially made or adapted for infringing the ’670 Patent and have no substantial non-infringing use.

ANSWER: Tesla denies the allegations and characterizations of Paragraph 67.

68. Exhibit 22 (claim charts) includes the Example Count II Automotive Vehicles and Example ’670 Patent Claims. As set forth in these charts, the Example Count II Automotive Vehicles practice the technology claimed by the ’670 Patent. Accordingly, the Example Count II Automotive Vehicles incorporated in these charts satisfy all elements of the Example ’670 Patent Claims.

ANSWER: Tesla denies the allegations and characterizations of Paragraph 68 and those set forth in Exhibit 22 to the Complaint.

69. Intellectual Ventures therefore incorporates by reference in its allegations herein the claim charts of Exhibit 22.

ANSWER: Tesla denies the allegations and characterizations set forth in Exhibit 22 to the Complaint.

70. Intellectual Ventures is entitled to recover damages adequate to compensate for Defendant’s infringement of the ’670 Patent and will continue to be damaged by such infringement. Intellectual Ventures is entitled to recover damages from Defendant to compensate them for Defendant’s infringement, as alleged above, in an amount measured by no less than a reasonable royalty under 35 U.S.C. § 284, as well as enhanced damages pursuant to 35 U.S.C. § 284.

ANSWER: Tesla denies the allegations and characterizations of Paragraph 70.

71. Further, Defendant's infringement of Intellectual Ventures's rights under the '670 Patent will continue to damage Intellectual Ventures's business, causing irreparable harm for which there is no adequate remedy at law, unless enjoined by the Court.

ANSWER: Tesla denies the allegations and characterizations of Paragraph 71.

72. As a result of Defendant's acts of infringement, Plaintiff has suffered and will continue to suffer damages in an amount to be proven at trial.

ANSWER: Tesla denies the allegations and characterizations of Paragraph 72.

COUNT III

(Tesla's Infringement of U.S. Patent No. 11,664,889)

73. Answers to Paragraphs 1 through 72 are incorporated by reference as if fully set forth herein.

ANSWER: Tesla incorporates herein its responses to the allegations set forth above in Paragraphs 1 through 72.

74. **Direct Infringement.** Defendant directly infringed, and continues to directly infringe, literally and/or by the doctrine of equivalents, individually and/or jointly, the '889 Patent, by designing, developing, making, manufacturing, utilizing, distributing, providing, testing, selling, and/or offering for sale and/or importing into the United States the Accused Products that infringe the '889 Patent including, but not limited to, Tesla automotive vehicles, and all past, current and future Tesla products that operate in the same or substantially similar manner as the specifically identified products and components (collectively, "Example Count III Automotive Vehicles"). The Accused Products identified in the example charts incorporated in Example Count III Automotive Vehicles infringe at least the exemplary claims of the '889 Patent identified in the charts incorporated into this Count III (the "Example '889 Patent Claims") literally and/or by the doctrine of equivalents.

ANSWER: Tesla denies the allegations and characterizations of Paragraph 74.

75. On information and belief, Defendant has also infringed and continues to directly infringe, literally and/or under the doctrine of equivalents, the Exemplary ’889 Patent Claims, by internal testing and use of the Example Count III Automotive Vehicles.

ANSWER: Tesla denies the allegations and characterizations of Paragraph 75.

76. **Willful Blindness.** Defendant knew of the ’889 Patent, or should have known of the ’889 Patent, but was willfully blind to its existence. Defendant has had actual knowledge of the ’889 Patent not later than receipt of a letter, dated April 11, 2024, and received on the same date. By the time of trial, Defendant will have known and intended (since receiving such notice) that its continued actions would infringe and actively induce and contribute to the infringement of one or more claims of the ’889 Patent. See Exhibit 20.

ANSWER: Tesla admits the ’889 Patent was listed in a letter purportedly sent to Tesla on April 11, 2024 (Exhibit 20). Tesla denies the remaining allegations and characterizations of Paragraph 76. Further, Tesla denies the allegations and characterizations set forth in Exhibit 20.

77. **Induced Infringement.** Defendant has also induced, and continues to induce, the infringement of the ’889 Patent by others – including, but not limited to, inducing their consumers, partners, vendors, and/or third parties to use their Accused Products, such as Example Count III Automotive Vehicles, in an infringing manner as described above, including encouraging and instructing their consumers, partners, vendors, and/or third parties to infringe the ’889 Patent. 78. Defendant therefore actively, knowingly, and intentionally has committed, and continues to commit, affirmative acts that cause infringement, literally and/or by the doctrine of equivalents, of one or more claims of the ’889 Patent with knowledge of the ’889 Patent and knowledge that the induced acts constitute infringement of one or more claims of the ’889 Patent.

ANSWER: Tesla denies the allegations and characterizations of Paragraph 77.

78. Defendant has actively induced others, including, but not limited to, consumers, partners, vendors, and/or third parties, who use the Example Count III Automotive Vehicles to infringe the ’889 Patent, literally and/or by the doctrine of equivalents, throughout the United States, including within this District, by, among other things, advertising, promoting, and instructing the infringing use of the Example Count III Automotive Vehicles.

ANSWER: Tesla denies the allegations and characterizations of Paragraph 78.

79. Contributory Infringement. Defendant actively, knowingly, and intentionally has committed, and continues to commit contributory infringement, literally and/or by the doctrine of equivalents, by, inter alia, knowingly providing software and technologies that when used, cause the direct infringement of one or more claims of the ’889 Patent by their consumers, partners, vendors, and/or third parties, and which have no substantial non-infringing uses, or include a separate and distinct technology that is especially made or especially adapted for use in infringement of the ’889 Patent, and is not a staple article or commodity of commerce suitable for substantial non-infringing use.

ANSWER: Tesla denies the allegations and characterizations of Paragraph 79.

80. Defendant therefore actively, knowingly, and intentionally has been and continues to materially contribute to their consumers’, partners’, vendors’, and/or third-parties’ infringement of the ’889 Patent, literally and/or by the doctrine of equivalents, by designing, developing, making, manufacturing, utilizing, distributing, providing, testing, selling, and/or offering for sale and/or importing into the United States the Example Count III Automotive Vehicles for use in a manner that infringes one or more claims of the ’889 Patent. Example Count III Automotive

Vehicles are especially made or adapted for infringing the ’889 Patent and have no substantial non-infringing use.

ANSWER: Tesla denies the allegations and characterizations of Paragraph 80.

81. Exhibit 23 (claim charts) includes the Example Count III Automotive Vehicles and Example ’889 Patent Claims. As set forth in these charts, the Example Count III Automotive Vehicles practice the technology claimed by the ’889 Patent. Accordingly, the Example Count III Automotive Vehicles incorporated in these charts satisfy all elements of the Example ’889 Patent Claims.

ANSWER: Tesla denies the allegations and characterizations of Paragraph 81 and those set forth in Exhibit 23 to the Complaint.

82. Intellectual Ventures therefore incorporates by reference in its allegations herein the claim charts of Exhibit 23.

ANSWER: Tesla denies the allegations and characterizations set forth in Exhibit 23 to the Complaint.

83. Intellectual Ventures is entitled to recover damages adequate to compensate for Defendant’s infringement of the ’889 Patent and will continue to be damaged by such infringement. Intellectual Ventures is entitled to recover damages from Defendant to compensate them for Defendant’s infringement, as alleged above, in an amount measured by no less than a reasonable royalty under 35 U.S.C. § 284, as well as enhanced damages pursuant to 35 U.S.C. § 284.

ANSWER: Tesla denies the allegations and characterizations of Paragraph 83.

84. Further, Defendant's infringement of Intellectual Ventures's rights under the '889 Patent will continue to damage Intellectual Ventures's business, causing irreparable harm for which there is no adequate remedy at law, unless enjoined by the Court.

ANSWER: Tesla denies the allegations and characterizations of Paragraph 84.

85. As a result of Defendant's acts of infringement, Plaintiff has suffered and will continue to suffer damages in an amount to be proven at trial.

ANSWER: Tesla denies the allegations and characterizations of Paragraph 85.

COUNT IV

(Tesla's Infringement of U.S. Patent No. 9,706,500)

86. Answers to Paragraphs 1 through 85 are incorporated by reference as if fully set forth herein.

ANSWER: Tesla incorporates herein its responses to the allegations set forth above in Paragraphs 1 through 85.

87. **Direct Infringement.** Defendant directly infringed, and continues to directly infringe, literally and/or by the doctrine of equivalents, individually and/or jointly, the '500 Patent, by designing, developing, making, manufacturing, utilizing, distributing, providing, testing, selling, and/or offering for sale and/or importing into the United States the Accused Products that infringe the '500 Patent including, but not limited to, Tesla automotive vehicles, and all past, current and future Tesla products that operate in the same or substantially similar manner as the specifically identified products and components (collectively, "Example Count IV Automotive Vehicles"). The Accused Products identified in the example charts incorporated in Example Count IV Automotive Vehicles infringe at least the exemplary claims of the '500 Patent identified in the charts incorporated into this Count IV (the "Example '500 Patent Claims") literally and/or by the doctrine of equivalents.

ANSWER: Tesla denies the allegations and characterizations of Paragraph 87.

88. On information and belief, Defendant has also infringed and continues to directly infringe, literally and/or under the doctrine of equivalents, the Exemplary ’500 Patent Claims, by internal testing and use of the Example Count IV Automotive Vehicles.

ANSWER: Tesla denies the allegations and characterizations of Paragraph 88.

89. **Willful Blindness.** Defendant knew of the ’500 Patent, or should have known of the ’500 Patent, but was willfully blind to its existence. Defendant has had actual knowledge of the ’500 Patent not later than receipt of a letter, dated April 11, 2024, and received on the same date. By the time of trial, Defendant will have known and intended (since receiving such notice) that their continued actions would infringe and actively induce and contribute to the infringement of one or more claims of the ’500 Patent. See Exhibits 19 & 20.

ANSWER: Tesla admits the ’500 Patent was listed in a letter purportedly sent to Tesla on April 11, 2024 (Exhibit 20). Tesla denies the remaining allegations and characterizations of Paragraph 89. Further, Tesla denies the allegations and characterizations set forth in Exhibits 19 and 20.

90. **Induced Infringement.** Defendant has also induced, and continues to induce, the infringement of the ’500 Patent by others – including, but not limited to, inducing their consumers, partners, vendors, and/or third parties to use their Accused Products, such as Example Count IV Automotive Vehicles, in an infringing manner as described above, including encouraging and instructing their consumers, partners, vendors, and/or third parties to infringe the ’500 Patent.

ANSWER: Tesla denies the allegations and characterizations of Paragraph 90.

91. Defendant therefore actively, knowingly, and intentionally has committed, and continues to commit, affirmative acts that cause infringement, literally and/or by the doctrine of

equivalents, of one or more claims of the ’500 Patent with knowledge of the ’500 Patent and knowledge that the induced acts constitute infringement of one or more claims of the ’500 Patent. Defendant has actively induced others, including, but not limited to, consumers, partners, vendors, and/or third parties, who use the Example Count IV Automotive Vehicles to infringe the ’500 Patent, literally and/or by the doctrine of equivalents, throughout the United States, including within this District, by, among other things, advertising, promoting, and instructing the infringing use of the Example Count IV Automotive Vehicles.

ANSWER: Tesla denies the allegations and characterizations of Paragraph 91.

92. **Contributory Infringement.** Defendant actively, knowingly, and intentionally has committed, and continues to commit contributory infringement, literally and/or by the doctrine of equivalents, by, inter alia, knowingly providing software and technologies that when used, cause the direct infringement of one or more claims of the ’500 Patent by their consumers, partners, vendors, and/or third parties, and which have no substantial non-infringing uses, or include a separate and distinct technology that is especially made or especially adapted for use in infringement of the ’500 Patent, and is not a staple article or commodity of commerce suitable for substantial non-infringing use.

ANSWER: Tesla denies the allegations and characterizations of Paragraph 92.

93. Defendant therefore actively, knowingly, and intentionally has been and continues to materially contribute to their consumers’, partners’, vendors’, and/or third-parties’ infringement of the ’500 Patent, literally and/or by the doctrine of equivalents, by designing, developing, making, manufacturing, utilizing, distributing, providing, testing, selling, and/or offering for sale and/or importing into the United States the Example Count IV Automotive Vehicles for use in a manner that infringes one or more claims of the ’500 Patent. Example Count IV Automotive

Vehicles are especially made or adapted for infringing the ’500 Patent and have no substantial non-infringing use.

ANSWER: Tesla denies the allegations and characterizations of Paragraph 93.

94. Exhibit 24 (claim charts) includes the Example Count IV Automotive Vehicles and Example ’500 Patent Claims. As set forth in these charts, the Example Count IV Automotive Vehicles practice the technology claimed by the ’500 Patent. Accordingly, the Example Count IV Automotive Vehicles incorporated in these charts satisfy all elements of the Example ’500 Patent Claims.

ANSWER: Tesla denies the allegations and characterizations of Paragraph 94 and those set forth in Exhibit 24 to the Complaint.

95. Intellectual Ventures therefore incorporates by reference in its allegations herein the claim charts of Exhibit 24.

ANSWER: Tesla denies the allegations and characterizations set forth in Exhibit 24 to the Complaint.

96. Intellectual Ventures is entitled to recover damages adequate to compensate for Defendant’s infringement of the ’500 Patent and will continue to be damaged by such infringement. Intellectual Ventures is entitled to recover damages from Defendant to compensate them for Defendant’s infringement, as alleged above, in an amount measured by no less than a reasonable royalty under 35 U.S.C. § 284, as well as enhanced damages pursuant to 35 U.S.C. § 284.

ANSWER: Tesla denies the allegations and characterizations of Paragraph 96.

97. Further, Defendant's infringement of Intellectual Ventures's rights under the '500 Patent will continue to damage Intellectual Ventures's business, causing irreparable harm for which there is no adequate remedy at law, unless enjoined by the Court.

ANSWER: Tesla denies the allegations and characterizations of Paragraph 97.

98. As a result of Defendant's acts of infringement, Plaintiff has suffered and will continue to suffer damages in an amount to be proven at trial.

ANSWER: Tesla denies the allegations and characterizations of Paragraph 98.

COUNT V

(Tesla's Infringement of U.S. Patent No. 10,292,138)

99. Answers to Paragraphs 1 through 98 are incorporated by reference as if fully set forth herein.

ANSWER: Tesla incorporates herein its responses to the allegations set forth above in Paragraphs 1 through 98.

100. **Direct Infringement.** Defendant directly infringed, and continues to directly infringe, literally and/or by the doctrine of equivalents, individually and/or jointly, the '138 Patent, by designing, developing, making, manufacturing, utilizing, distributing, providing, testing, selling, and/or offering for sale and/or importing into the United States the Accused Products that infringe the '138 Patent including, but not limited to, Tesla automotive vehicles, and all past, current and future Tesla products that operate in the same or substantially similar manner as the specifically identified products and components (collectively, "Example Count V Automotive Vehicles"). The Accused Products identified in the example charts incorporated in Example Count V Automotive Vehicles infringe at least the exemplary claims of the '138 Patent identified in the charts incorporated into this Count V (the "Example '138 Patent Claims") literally and/or by the doctrine of equivalents.

ANSWER: Tesla denies the allegations and characterizations of Paragraph 100.

101. On information and belief, Defendant has also infringed and continues to directly infringe, literally and/or under the doctrine of equivalents, the Exemplary ’138 Patent Claims, by internal testing and use of the Example Count V Automotive Vehicles.

ANSWER: Tesla denies the allegations and characterizations of Paragraph 101.

102. **Willful Blindness.** Defendant knew of the ’138 Patent, or should have known of the ’138 Patent, but was willfully blind to its existence. Defendant has had actual knowledge of the ’138 Patent not later than receipt of a letter, dated April 11, 2024, and received on the same date. By the time of trial, Defendant will have known and intended (since receiving such notice) that its continued actions would infringe and actively induce and contribute to the infringement of one or more claims of the ’138 Patent. See Exhibit 20.

ANSWER: Tesla admits the ’138 Patent was listed in a letter purportedly sent to Tesla on April 11, 2024 (Exhibit 20). Tesla denies the remaining allegations and characterizations of Paragraph 102. Further, Tesla denies the allegations and characterizations set forth in Exhibit 20.

103. **Induced Infringement**. Defendant has also induced, and continues to induce, the infringement of the ’138 Patent by others – including, but not limited to, inducing their consumers, partners, vendors, and/or third parties to use their Accused Products, such as Example Count V Automotive Vehicles, in an infringing manner as described above, including encouraging and instructing their consumers, partners, vendors, and/or third parties to infringe the ’138 Patent.

ANSWER: Tesla denies the allegations and characterizations of Paragraph 103.

104. Defendant therefore actively, knowingly, and intentionally has committed, and continues to commit, affirmative acts that cause infringement, literally and/or by the doctrine of equivalents, of one or more claims of the ’138 Patent with knowledge of the ’138 Patent and

knowledge that the induced acts constitute infringement of one or more claims of the ’138 Patent. Defendant has actively induced others, including, but not limited to, consumers, partners, vendors, and/or third parties, who use the Example Count V Automotive Vehicles to infringe the ’138 Patent, literally and/or by the doctrine of equivalents, throughout the United States, including within this District, by, among other things, advertising, promoting, and instructing the infringing use of the Example Count V Automotive Vehicles.

ANSWER: Tesla denies the allegations and characterizations of Paragraph 104.

105. **Contributory Infringement.** Defendant actively, knowingly, and intentionally has committed, and continues to commit contributory infringement, literally and/or by the doctrine of equivalents, by, inter alia, knowingly providing software and technologies that when used, cause the direct infringement of one or more claims of the ’138 Patent by their consumers, partners, vendors, and/or third parties, and which have no substantial non-infringing uses, or include a separate and distinct technology that is especially made or especially adapted for use in infringement of the ’138 Patent, and is not a staple article or commodity of commerce suitable for substantial non-infringing use.

ANSWER: Tesla denies the allegations and characterizations of Paragraph 105.

106. Defendant therefore actively, knowingly, and intentionally has been and continues to materially contribute to their consumers’, partners’, vendors’, and/or third-parties’ infringement of the ’138 Patent, literally and/or by the doctrine of equivalents, by designing, developing, making, manufacturing, utilizing, distributing, providing, testing, selling, and/or offering for sale and/or importing into the United States the Example Count V Automotive Vehicles for use in a manner that infringes one or more claims of the ’138 Patent. Example Count V Automotive

Vehicles are especially made or adapted for infringing the ’138 Patent and have no substantial non-infringing use.

ANSWER: Tesla denies the allegations and characterizations of Paragraph 106.

107. Exhibit 25 (claim charts) includes the Example Count V Automotive Vehicles and Example ’138 Patent Claims. As set forth in these charts, the Example Count V Automotive Vehicles practice the technology claimed by the ’138 Patent. Accordingly, the Example Count V Automotive Vehicles incorporated in these charts satisfy all elements of the Example ’138 Patent Claims.

ANSWER: Tesla denies the allegations and characterizations of Paragraph 107 and those set forth in Exhibit 25 to the Complaint.

108. Intellectual Ventures therefore incorporates by reference in its allegations herein the claim charts of Exhibit 25.

ANSWER: Tesla denies the allegations and characterizations set forth in Exhibit 25 to the Complaint.

109. Intellectual Ventures is entitled to recover damages adequate to compensate for Defendant’s infringement of the ’138 Patent and will continue to be damaged by such infringement. Intellectual Ventures is entitled to recover damages from Defendant to compensate them for Defendant’s infringement, as alleged above, in an amount measured by no less than a reasonable royalty under 35 U.S.C. § 284, as well as enhanced damages pursuant to 35 U.S.C. § 284.

ANSWER: Tesla denies the allegations and characterizations of Paragraph 109.

110. Further, Defendant's infringement of Intellectual Ventures's rights under the '138 Patent will continue to damage Intellectual Ventures's business, causing irreparable harm for which there is no adequate remedy at law, unless enjoined by the Court.

ANSWER: Tesla denies the allegations and characterizations of Paragraph 110.

111. As a result of Defendant's acts of infringement, Plaintiff has suffered and will continue to suffer damages in an amount to be proven at trial.

ANSWER: Tesla denies the allegations and characterizations of Paragraph 111.

COUNT VI

(Tesla's Infringement of U.S. Patent No. 10,952,153)

112. Answers to Paragraphs 1 through 111 are incorporated by reference as if fully set forth herein.

ANSWER: Tesla incorporates herein its responses to the allegations set forth above in Paragraphs 1 through 111.

113. **Direct Infringement.** Defendant directly infringed, and continues to directly infringe, literally and/or by the doctrine of equivalents, individually and/or jointly, the '153 Patent, by designing, developing, making, manufacturing, utilizing, distributing, providing, testing, selling, and/or offering for sale and/or importing into the United States the Accused Products that infringe the '153 Patent including, but not limited to, Tesla automotive vehicles, and all past, current and future Tesla products that operate in the same or substantially similar manner as the specifically identified products and components (collectively, "Example Count VI Automotive Vehicles"). The Accused Products identified in the example charts incorporated in Example Count VI Automotive Vehicles infringe at least the exemplary claims of the '153 Patent identified in the charts incorporated into this Count VI (the "Example '153 Patent Claims") literally and/or by the doctrine of equivalents.

ANSWER: Tesla denies the allegations and characterizations of Paragraph 113.

114. On information and belief, Defendant has also infringed and continues to directly infringe, literally and/or under the doctrine of equivalents, the Exemplary '153 Patent Claims, by internal testing and use of the Example Count VI Automotive Vehicles.

ANSWER: Tesla denies the allegations and characterizations of Paragraph 114.

115. **Willful Blindness.** Defendant knew of the '153 Patent, or should have known of the '153 Patent, but was willfully blind to its existence. Defendant has had actual knowledge of the '153 Patent not later than receipt of a letter, dated April 11, 2024, and received on the same date. By the time of trial, Defendant will have known and intended (since receiving such notice) that its continued actions would infringe and actively induce and contribute to the infringement of one or more claims of the '153 Patent. See Exhibit 20.

ANSWER: Tesla admits the '153 Patent was listed in a letter purportedly sent to Tesla on April 11, 2024 (Exhibit 20). Tesla denies the remaining allegations and characterizations of Paragraph 115. Further, Tesla denies the allegations and characterizations set forth in Exhibit 20.

116. **Induced Infringement.** Defendant has also induced, and continues to induce, the infringement of the '153 Patent by others – including, but not limited to, inducing their consumers, partners, vendors, and/or third parties to use their Accused Products, such as Example Count VI Automotive Vehicles, in an infringing manner as described above, including encouraging and instructing their consumers, partners, vendors, and/or third parties to infringe the '153 Patent.

ANSWER: Tesla denies the allegations and characterizations of Paragraph 116.

117. Defendant therefore actively, knowingly, and intentionally has committed, and continues to commit, affirmative acts that cause infringement, literally and/or by the doctrine of equivalents, of one or more claims of the '153 Patent with knowledge of the '153 Patent and

knowledge that the induced acts constitute infringement of one or more claims of the ’153 Patent. Defendant has actively induced others, including, but not limited to, consumers, partners, vendors, and/or third parties, who use the Example Count VI Automotive Vehicles to infringe the ’153 Patent, literally and/or by the doctrine of equivalents, throughout the United States, including within this District, by, among other things, advertising, promoting, and instructing the infringing use of the Example Count VI Automotive Vehicles.

ANSWER: Tesla denies the allegations and characterizations of Paragraph 117.

118. **Contributory Infringement.** Defendant actively, knowingly, and intentionally has committed, and continues to commit contributory infringement, literally and/or by the doctrine of equivalents, by, inter alia, knowingly providing software and technologies that when used, cause the direct infringement of one or more claims of the ’153 Patent by their consumers, partners, vendors, and/or third parties, and which have no substantial non-infringing uses, or include a separate and distinct technology that is especially made or especially adapted for use in infringement of the ’153 Patent, and is not a staple article or commodity of commerce suitable for substantial non-infringing use.

ANSWER: Tesla denies the allegations and characterizations of Paragraph 118.

119. Defendant therefore actively, knowingly, and intentionally has been and continues to materially contribute to their consumers’, partners’, vendors’, and/or third-parties’ infringement of the ’153 Patent, literally and/or by the doctrine of equivalents, by designing, developing, making, manufacturing, utilizing, distributing, providing, testing, selling, and/or offering for sale and/or importing into the United States the Example Count VI Automotive Vehicles for use in a manner that infringes one or more claims of the ’153 Patent. Example Count VI Automotive

Vehicles are especially made or adapted for infringing the ’153 Patent and have no substantial non-infringing use.

ANSWER: Tesla denies the allegations and characterizations of Paragraph 119.

120. Exhibit 26 (claim charts) includes the Example Count VI Automotive Vehicles and Example ’153 Patent Claims. As set forth in these charts, the Example Count VI Automotive Vehicles practice the technology claimed by the ’153 Patent. Accordingly, the Example Count VI Automotive Vehicles incorporated in these charts satisfy all elements of the Example ’153 Patent Claims.

ANSWER: Tesla denies the allegations and characterizations of Paragraph 120 and those set forth in Exhibit 26 to the Complaint.

121. Intellectual Ventures therefore incorporates by reference in its allegations herein the claim charts of Exhibit 26.

ANSWER: Tesla denies the allegations and characterizations set forth in Exhibit 26 to the Complaint.

122. Intellectual Ventures is entitled to recover damages adequate to compensate for Defendant’s infringement of the ’153 Patent and will continue to be damaged by such infringement. Intellectual Ventures is entitled to recover damages from Defendant to compensate them for Defendant’s infringement, as alleged above, in an amount measured by no less than a reasonable royalty under 35 U.S.C. § 284, as well as enhanced damages pursuant to 35 U.S.C. § 284.

ANSWER: Tesla denies the allegations and characterizations of Paragraph 122.

123. Further, Defendant's infringement of Intellectual Ventures's rights under the '153 Patent will continue to damage Intellectual Ventures's business, causing irreparable harm for which there is no adequate remedy at law, unless enjoined by the Court.

ANSWER: Tesla denies the allegations and characterizations of Paragraph 123.

124. As a result of Defendant's acts of infringement, Plaintiff has suffered and will continue to suffer damages in an amount to be proven at trial.

ANSWER: Tesla denies the allegations and characterizations of Paragraph 124.

COUNT VII

(Tesla's Infringement of U.S. Patent No. 8,898,395)

125. Answers to Paragraphs 1 through 124 are incorporated by reference as if fully set forth herein.

ANSWER: Tesla incorporates herein its responses to the allegations set forth above in Paragraphs 1 through 124.

126. **Direct Infringement.** Defendant directly infringed, and continues to directly infringe, literally and/or by the doctrine of equivalents, individually and/or jointly, the '395 Patent, by designing, developing, making, manufacturing, utilizing, distributing, providing, testing, selling, and/or offering for sale and/or importing into the United States the Accused Products that infringe the '395 Patent including, but not limited to, Tesla automotive vehicles, and all past, current and future Tesla products that operate in the same or substantially similar manner as the specifically identified products and components (collectively, "Example Count VII Automotive Vehicles"). The Accused Products identified in the example charts incorporated in Example Count VII Automotive Vehicles infringe at least the exemplary claims of the '395 Patent identified in the charts incorporated into this Count VII (the "Example '395 Patent Claims") literally and/or by the doctrine of equivalents.

ANSWER: Tesla denies the allegations and characterizations of Paragraph 126.

127. On information and belief, Defendant has also infringed and continues to directly infringe, literally and/or under the doctrine of equivalents, the Exemplary ’395 Patent Claims, by internal testing and use of the Example Count VII Automotive Vehicles.

ANSWER: Tesla denies the allegations and characterizations of Paragraph 127.

128. Willful Blindness. Defendant knew of the ’395 Patent, or should have known of the ’395 Patent, but was willfully blind to its existence. Defendant has had actual knowledge of the ’395 Patent not later than receipt of a letter, dated April 11, 2024, and received on the same date. By the time of trial, Defendant will have known and intended (since receiving such notice) that its continued actions would infringe and actively induce and contribute to the infringement of one or more claims of the ’395 Patent. See Exhibit 20.

ANSWER: Tesla admits the ’395 Patent was listed in a letter purportedly sent to Tesla on April 11, 2024 (Exhibit 20). Tesla denies the remaining allegations and characterizations of Paragraph 128. Further, Tesla denies the allegations and characterizations set forth in Exhibit 20.

129. **Induced Infringement.** Defendant has also induced, and continues to induce, the infringement of the ’395 Patent by others – including, but not limited to, inducing their consumers, partners, vendors, and/or third parties to use their Accused Products, such as Example Count VII Automotive Vehicles, in an infringing manner as described above, including encouraging and instructing their consumers, partners, vendors, and/or third parties to infringe the ’395 Patent. 130.

ANSWER: Tesla denies the allegations and characterizations of Paragraph 129.

130. Defendant therefore actively, knowingly, and intentionally has committed, and continues to commit, affirmative acts that cause infringement, literally and/or by the doctrine of equivalents, of one or more claims of the ’395 Patent with knowledge of the ’395 Patent and

knowledge that the induced acts constitute infringement of one or more claims of the ’395 Patent. Defendant has actively induced others, including, but not limited to, consumers, partners, vendors, and/or third parties, who use the Example Count VII Automotive Vehicles to infringe the ’395 Patent, literally and/or by the doctrine of equivalents, throughout the United States, including within this District, by, among other things, advertising, promoting, and instructing the infringing use of the Example Count VII Automotive Vehicles.

ANSWER: Tesla denies the allegations and characterizations of Paragraph 130.

131. **Contributory Infringement.** Defendant actively, knowingly, and intentionally has committed, and continues to commit contributory infringement, literally and/or by the doctrine of equivalents, by, inter alia, knowingly providing software and technologies that when used, cause the direct infringement of one or more claims of the ’395 Patent by their consumers, partners, vendors, and/or third parties, and which have no substantial non-infringing uses, or include a separate and distinct technology that is especially made or especially adapted for use in infringement of the ’395 Patent, and is not a staple article or commodity of commerce suitable for substantial non-infringing use.

ANSWER: Tesla denies the allegations and characterizations of Paragraph 131.

132. Defendant therefore actively, knowingly, and intentionally has been and continues to materially contribute to their consumers’, partners’, vendors’, and/or third-parties’ infringement of the ’395 Patent, literally and/or by the doctrine of equivalents, by designing, developing, making, manufacturing, utilizing, distributing, providing, testing, selling, and/or offering for sale and/or importing into the United States the Example Count VII Automotive Vehicles for use in a manner that infringes one or more claims of the ’395 Patent. Example Count VII Automotive

Vehicles are especially made or adapted for infringing the ’395 Patent and have no substantial non-infringing use.

ANSWER: Tesla denies the allegations and characterizations of Paragraph 132.

133. Exhibit 27 (claim charts) includes the Example Count VII Automotive Vehicles and Example ’395 Patent Claims. As set forth in these charts, the Example Count VII Automotive Vehicles practice the technology claimed by the ’395 Patent. Accordingly, the Example Count VII Automotive Vehicles incorporated in these charts satisfy all elements of the Example ’395 Patent Claims.

ANSWER: Tesla denies the allegations and characterizations of Paragraph 133 and those set forth in Exhibit 27 to the Complaint.

134. Intellectual Ventures therefore incorporates by reference in its allegations herein the claim charts of Exhibit 27.

ANSWER: Tesla denies the allegations and characterizations set forth in Exhibit 27 to the Complaint.

135. Intellectual Ventures is entitled to recover damages adequate to compensate for Defendant’s infringement of the ’395 Patent and will continue to be damaged by such infringement. Intellectual Ventures is entitled to recover damages from Defendant to compensate them for Defendant’s infringement, as alleged above, in an amount measured by no less than a reasonable royalty under 35 U.S.C. § 284, as well as enhanced damages pursuant to 35 U.S.C. § 284.

ANSWER: Tesla denies the allegations and characterizations of Paragraph 135.

136. Further, Defendant's infringement of Intellectual Ventures's rights under the '395 Patent will continue to damage Intellectual Ventures's business, causing irreparable harm for which there is no adequate remedy at law, unless enjoined by the Court.

ANSWER: Tesla denies the allegations and characterizations of Paragraph 136.

137. As a result of Defendant's acts of infringement, Plaintiff has suffered and will continue to suffer damages in an amount to be proven at trial.

ANSWER: Tesla denies the allegations and characterizations of Paragraph 137.

COUNT VIII

(Tesla's Infringement of U.S. Patent No. 10,136,416)

138. Answers to Paragraphs 1 through 137 are incorporated by reference as if fully set forth herein.

ANSWER: Tesla incorporates herein its responses to the allegations set forth above in Paragraphs 1 through 137.

139. **Direct Infringement.** Defendant directly infringed, and continues to directly infringe, literally and/or by the doctrine of equivalents, individually and/or jointly, the '416 Patent, by designing, developing, making, manufacturing, utilizing, distributing, providing, testing, selling, and/or offering for sale and/or importing into the United States the Accused Products that infringe the '416 Patent including, but not limited to, Tesla automotive vehicles, and all past, current and future Tesla products that operate in the same or substantially similar manner as the specifically identified products and components (collectively, "Example Count VII Automotive Vehicles"). The Accused Products identified in the example charts incorporated in Example Count VII Automotive Vehicles infringe at least the exemplary claims of the '416 Patent identified in the charts incorporated into this Count VII (the "Example '416 Patent Claims") literally and/or by the doctrine of equivalents.

ANSWER: Tesla denies the allegations and characterizations of Paragraph 139.

140. On information and belief, Defendant has also infringed and continues to directly infringe, literally and/or under the doctrine of equivalents, the Exemplary ’416 Patent Claims, by internal testing and use of the Example Count VII Automotive Vehicles.

ANSWER: Tesla denies the allegations and characterizations of Paragraph 140.

141. **Willful Blindness.** Defendant knew of the ’416 Patent, or should have known of the ’416 Patent, but was willfully blind to its existence. Defendant has had actual knowledge of the ’416 Patent not later than receipt of a letter, dated April 11, 2024, and received on the same date. By the time of trial, Defendant will have known and intended (since receiving such notice) that its continued actions would infringe and actively induce and contribute to the infringement of one or more claims of the ’416 Patent. See Exhibit 20.

ANSWER: Tesla admits the ’416 Patent was listed in a letter purportedly sent to Tesla on April 11, 2024 (Exhibit 20). Tesla denies the remaining allegations and characterizations of Paragraph 141. Further, Tesla denies the allegations and characterizations set forth in Exhibit 20.

142. **Induced Infringement.** Defendant has also induced, and continues to induce, the infringement of the ’416 Patent by others – including, but not limited to, inducing their consumers, partners, vendors, and/or third parties to use their Accused Products, such as Example Count VII Automotive Vehicles, in an infringing manner as described above, including encouraging and instructing their consumers, partners, vendors, and/or third parties to infringe the ’416 Patent.

ANSWER: Tesla denies the allegations and characterizations of Paragraph 142.

143. Defendant therefore actively, knowingly, and intentionally has committed, and continues to commit, affirmative acts that cause infringement, literally and/or by the doctrine of equivalents, of one or more claims of the ’416 Patent with knowledge of the ’416 Patent and

knowledge that the induced acts constitute infringement of one or more claims of the ’416 Patent. Defendant has actively induced others, including, but not limited to, consumers, partners, vendors, and/or third parties, who use the Example Count VII Automotive Vehicles to infringe the ’416 Patent, literally and/or by the doctrine of equivalents, throughout the United States, including within this District, by, among other things, advertising, promoting, and instructing the infringing use of the Example Count VII Automotive Vehicles.

ANSWER: Tesla denies the allegations and characterizations of Paragraph 143.

144. **Contributory Infringement.** Defendant actively, knowingly, and intentionally has committed, and continues to commit contributory infringement, literally and/or by the doctrine of equivalents, by, inter alia, knowingly providing software and technologies that when used, cause the direct infringement of one or more claims of the ’416 Patent by their consumers, partners, vendors, and/or third parties, and which have no substantial non-infringing uses, or include a separate and distinct technology that is especially made or especially adapted for use in infringement of the ’416 Patent, and is not a staple article or commodity of commerce suitable for substantial non-infringing use.

ANSWER: Tesla denies the allegations and characterizations of Paragraph 144.

145. Defendant therefore actively, knowingly, and intentionally has been and continues to materially contribute to their consumers’, partners’, vendors’, and/or third-parties’ infringement of the ’416 Patent, literally and/or by the doctrine of equivalents, by designing, developing, making, manufacturing, utilizing, distributing, providing, testing, selling, and/or offering for sale and/or importing into the United States the Example Count VII Automotive Vehicles for use in a manner that infringes one or more claims of the ’416 Patent. Example Count VII Automotive

Vehicles are especially made or adapted for infringing the ’416 Patent and have no substantial non-infringing use.

ANSWER: Tesla denies the allegations and characterizations of Paragraph 145.

146. Exhibit 28 (claim charts) includes the Example Count VII Automotive Vehicles and Example ’416 Patent Claims. As set forth in these charts, the Example Count VII Automotive Vehicles practice the technology claimed by the ’416 Patent. Accordingly, the Example Count VII Automotive Vehicles incorporated in these charts satisfy all elements of the Example ’416 Patent Claims.

ANSWER: Tesla denies the allegations and characterizations of Paragraph 146 and those set forth in Exhibit 28 to the Complaint.

147. Intellectual Ventures therefore incorporates by reference in its allegations herein the claim charts of Exhibit 28.

ANSWER: Tesla denies the allegations and characterizations set forth in Exhibit 28 to the Complaint.

148. Intellectual Ventures is entitled to recover damages adequate to compensate for Defendant’s infringement of the ’416 Patent and will continue to be damaged by such infringement. Intellectual Ventures is entitled to recover damages from Defendant to compensate them for Defendant’s infringement, as alleged above, in an amount measured by no less than a reasonable royalty under 35 U.S.C. § 284, as well as enhanced damages pursuant to 35 U.S.C. § 284.

ANSWER: Tesla denies the allegations and characterizations of Paragraph 148.

149. Further, Defendant's infringement of Intellectual Ventures's rights under the '416 Patent will continue to damage Intellectual Ventures's business, causing irreparable harm for which there is no adequate remedy at law, unless enjoined by the Court.

ANSWER: Tesla denies the allegations and characterizations of Paragraph 149.

150. As a result of Defendant's acts of infringement, Plaintiff has suffered and will continue to suffer damages in an amount to be proven at trial.

ANSWER: Tesla denies the allegations and characterizations of Paragraph 150.

COUNT IX

(Tesla's Infringement of U.S. Patent No. 7,916,180)

151. Answers to Paragraphs 1 through 150 are incorporated by reference as if fully set forth herein.

ANSWER: Tesla incorporates herein its responses to the allegations set forth above in Paragraphs 1 through 150.

152. **Direct Infringement.** Defendant directly infringed, and continues to directly infringe, literally and/or by the doctrine of equivalents, individually and/or jointly, the '180 Patent, by designing, developing, making, manufacturing, utilizing, distributing, providing, testing, selling, and/or offering for sale and/or importing into the United States the Accused Products that infringe the '180 Patent including, but not limited to, Tesla automotive vehicles, and all past, current and future Tesla products that operate in the same or substantially similar manner as the specifically identified products and components (collectively, "Example Count IX Automotive Vehicles"). The Accused Products identified in the example charts incorporated in Example Count IX Automotive Vehicles infringe at least the exemplary claims of the '180 Patent identified in the charts incorporated into this Count IX (the "Example '180 Patent Claims") literally and/or by the doctrine of equivalents.

ANSWER: Tesla denies the allegations and characterizations of Paragraph 152.

153. On information and belief, Defendant has also infringed and continues to directly infringe, literally and/or under the doctrine of equivalents, the Exemplary ’180 Patent Claims, by internal testing and use of the Example Count IX Automotive Vehicles.

ANSWER: Tesla denies the allegations and characterizations of Paragraph 153.

154. **Willful Blindness.** Defendant knew of the ’180 Patent, or should have known of the ’180 Patent, but was willfully blind to its existence. Defendant has had actual knowledge of the ’180 Patent not later than receipt of a letter, dated April 11, 2024, and received on the same date. By the time of trial, Defendant will have known and intended (since receiving such notice) that its continued actions would infringe and actively induce and contribute to the infringement of one or more claims of the ’180 Patent. See Exhibit 20.

ANSWER: Tesla admits the ’180 Patent was listed in a letter purportedly sent to Tesla on April 11, 2024 (Exhibit 20). Tesla denies the remaining allegations and characterizations of Paragraph 154. Further, Tesla denies the allegations and characterizations set forth in Exhibit 20.

155. **Induced Infringement.** Defendant has also induced, and continues to induce, the infringement of the ’180 Patent by others – including, but not limited to, inducing their consumers, partners, vendors, and/or third parties to use their Accused Products, such as Example Count IX Automotive Vehicles, in an infringing manner as described above, including encouraging and instructing their consumers, partners, vendors, and/or third parties to infringe the ’180 Patent.

ANSWER: Tesla denies the allegations and characterizations of Paragraph 155.

156. Defendant therefore actively, knowingly, and intentionally has committed, and continues to commit, affirmative acts that cause infringement, literally and/or by the doctrine of equivalents, of one or more claims of the ’180 Patent with knowledge of the ’180 Patent and

knowledge that the induced acts constitute infringement of one or more claims of the ’180 Patent. Defendant has actively induced others, including, but not limited to, consumers, partners, vendors, and/or third parties, who use the Example Count IX Automotive Vehicles to infringe the ’180 Patent, literally and/or by the doctrine of equivalents, throughout the United States, including within this District, by, among other things, advertising, promoting, and instructing the infringing use of the Example Count IX Automotive Vehicles.

ANSWER: Tesla denies the allegations and characterizations of Paragraph 156.

157. **Contributory Infringement.** Defendant actively, knowingly, and intentionally has committed, and continues to commit contributory infringement, literally and/or by the doctrine of equivalents, by, inter alia, knowingly providing software and technologies that when used, cause the direct infringement of one or more claims of the ’180 Patent by their consumers, partners, vendors, and/or third parties, and which have no substantial non-infringing uses, or include a separate and distinct technology that is especially made or especially adapted for use in infringement of the ’180 Patent, and is not a staple article or commodity of commerce suitable for substantial non-infringing use.

ANSWER: Tesla denies the allegations and characterizations of Paragraph 157.

158. Defendant therefore actively, knowingly, and intentionally has been and continues to materially contribute to their consumers’, partners’, vendors’, and/or third-parties’ infringement of the ’180 Patent, literally and/or by the doctrine of equivalents, by designing, developing, making, manufacturing, utilizing, distributing, providing, testing, selling, and/or offering for sale and/or importing into the United States the Example Count IX Automotive Vehicles for use in a manner that infringes one or more claims of the ’180 Patent. Example Count IX Automotive

Vehicles are especially made or adapted for infringing the ’180 Patent and have no substantial non-infringing use.

ANSWER: Tesla denies the allegations and characterizations of Paragraph 158.

159. Exhibit 29 (claim charts) includes the Example Count IX Automotive Vehicles and Example ’180 Patent Claims. As set forth in these charts, the Example Count IX Automotive Vehicles practice the technology claimed by the ’180 Patent. Accordingly, the Example Count IX Automotive Vehicles incorporated in these charts satisfy all elements of the Example ’180 Patent Claims.

ANSWER: Tesla denies the allegations and characterizations of Paragraph 159 and those set forth in Exhibit 29 to the Complaint.

160. Intellectual Ventures therefore incorporates by reference in its allegations herein the claim charts of Exhibit 29.

ANSWER: Tesla denies the allegations and characterizations set forth in Exhibit 29 to the Complaint.

161. Intellectual Ventures is entitled to recover damages adequate to compensate for Defendant’s infringement of the ’180 Patent and will continue to be damaged by such infringement. Intellectual Ventures is entitled to recover damages from Defendant to compensate them for Defendant’s infringement, as alleged above, in an amount measured by no less than a reasonable royalty under 35 U.S.C. § 284, as well as enhanced damages pursuant to 35 U.S.C. § 284.

ANSWER: Tesla denies the allegations and characterizations of Paragraph 161.

162. Further, Defendant's infringement of Intellectual Ventures's rights under the '180 Patent will continue to damage Intellectual Ventures's business, causing irreparable harm for which there is no adequate remedy at law, unless enjoined by the Court.

ANSWER: Tesla denies the allegations and characterizations of Paragraph 162.

163. As a result of Defendant's acts of infringement, Plaintiff has suffered and will continue to suffer damages in an amount to be proven at trial.

ANSWER: Tesla denies the allegations and characterizations of Paragraph 163.

COUNT X

(Tesla's Infringement of U.S. Patent No. 9,232,158)

164. Answers to Paragraphs 1 through 163 are incorporated by reference as if fully set forth herein.

ANSWER: Tesla incorporates herein its responses to the allegations set forth above in Paragraphs 1 through 163.

165. **Direct Infringement.** Defendant directly infringed, and continues to directly infringe, literally and/or by the doctrine of equivalents, individually and/or jointly, the '158 Patent, by designing, developing, making, manufacturing, utilizing, distributing, providing, testing, selling, and/or offering for sale and/or importing into the United States the Accused Products that infringe the '158 Patent including, but not limited to, Tesla automotive vehicles, and all past, current and future Tesla products that operate in the same or substantially similar manner as the specifically identified products and components (collectively, "Example Count X Automotive Vehicles"). The Accused Products identified in the example charts incorporated in Example Count X Automotive Vehicles infringe at least the exemplary claims of the '158 Patent identified in the charts incorporated into this Count X (the "Example '158 Patent Claims") literally and/or by the doctrine of equivalents.

ANSWER: Tesla denies the allegations and characterizations of Paragraph 165.

166. On information and belief, Defendant has also infringed and continues to directly infringe, literally and/or under the doctrine of equivalents, the Exemplary ’158 Patent Claims, by internal testing and use of the Example Count X Automotive Vehicles.

ANSWER: Tesla denies the allegations and characterizations of Paragraph 166.

167. **Willful Blindness**. Defendant knew of the ’158 Patent, or should have known of the ’158 Patent, but was willfully blind to its existence. Defendant has had actual knowledge of the ’158 Patent not later than receipt of a letter, dated April 11, 2024, and received on the same date. By the time of trial, Defendant will have known and intended (since receiving such notice) that its continued actions would infringe and actively induce and contribute to the infringement of one or more claims of the ’158 Patent. See Exhibit 20.

ANSWER: Tesla admits the ’158 Patent was listed in a letter purportedly sent to Tesla on April 11, 2024 (Exhibit 20). Tesla denies the remaining allegations and characterizations of Paragraph 167. Further, Tesla denies the allegations and characterizations set forth in Exhibit 20.

168. **Induced Infringement.** Defendant has also induced, and continues to induce, the infringement of the ’158 Patent by others – including, but not limited to, inducing their consumers, partners, vendors, and/or third parties to use their Accused Products, such as Example Count X Automotive Vehicles, in an infringing manner as described above, including encouraging and instructing their consumers, partners, vendors, and/or third parties to infringe the ’158 Patent.

ANSWER: Tesla denies the allegations and characterizations of Paragraph 168.

169. Defendant therefore actively, knowingly, and intentionally has committed, and continues to commit, affirmative acts that cause infringement, literally and/or by the doctrine of equivalents, of one or more claims of the ’158 Patent with knowledge of the ’158 Patent and

knowledge that the induced acts constitute infringement of one or more claims of the ’158 Patent. Defendant has actively induced others, including, but not limited to, consumers, partners, vendors, and/or third parties, who use the Example Count X Automotive Vehicles to infringe the ’158 Patent, literally and/or by the doctrine of equivalents, throughout the United States, including within this District, by, among other things, advertising, promoting, and instructing the infringing use of the Example Count X Automotive Vehicles.

ANSWER: Tesla denies the allegations and characterizations of Paragraph 169.

170. **Contributory Infringement.** Defendant actively, knowingly, and intentionally has committed, and continues to commit contributory infringement, literally and/or by the doctrine of equivalents, by, inter alia, knowingly providing software and technologies that when used, cause the direct infringement of one or more claims of the ’158 Patent by their consumers, partners, vendors, and/or third parties, and which have no substantial non-infringing uses, or include a separate and distinct technology that is especially made or especially adapted for use in infringement of the ’158 Patent, and is not a staple article or commodity of commerce suitable for substantial non-infringing use.

ANSWER: Tesla denies the allegations and characterizations of Paragraph 170.

171. Defendant therefore actively, knowingly, and intentionally has been and continues to materially contribute to their consumers’, partners’, vendors’, and/or third-parties’ infringement of the ’158 Patent, literally and/or by the doctrine of equivalents, by designing, developing, making, manufacturing, utilizing, distributing, providing, testing, selling, and/or offering for sale and/or importing into the United States the Example Count X Automotive Vehicles for use in a manner that infringes one or more claims of the ’158 Patent. Example Count X Automotive

Vehicles are especially made or adapted for infringing the ’158 Patent and have no substantial non-infringing use.

ANSWER: Tesla denies the allegations and characterizations of Paragraph 171.

172. Exhibit 30 (claim charts) includes the Example Count X Automotive Vehicles and Example ’158 Patent Claims. As set forth in these charts, the Example Count X Automotive Vehicles practice the technology claimed by the ’158 Patent. Accordingly, the Example Count X Automotive Vehicles incorporated in these charts satisfy all elements of the Example ’158 Patent Claims.

ANSWER: Tesla denies the allegations and characterizations of Paragraph 172 and those set forth in Exhibit 30 to the Complaint.

173. Intellectual Ventures therefore incorporates by reference in its allegations herein the claim charts of Exhibit 30.

ANSWER: Tesla denies the allegations and characterizations set forth in Exhibit 30 to the Complaint.

174. Intellectual Ventures is entitled to recover damages adequate to compensate for Defendant’s infringement of the ’158 Patent and will continue to be damaged by such infringement. Intellectual Ventures is entitled to recover damages from Defendant to compensate them for Defendant’s infringement, as alleged above, in an amount measured by no less than a reasonable royalty under 35 U.S.C. § 284, as well as enhanced damages pursuant to 35 U.S.C. § 284.

ANSWER: Tesla denies the allegations and characterizations of Paragraph 174.

175. Further, Defendant's infringement of Intellectual Ventures's rights under the '158 Patent will continue to damage Intellectual Ventures's business, causing irreparable harm for which there is no adequate remedy at law, unless enjoined by the Court.

ANSWER: Tesla denies the allegations and characterizations of Paragraph 175.

176. As a result of Defendant's acts of infringement, Plaintiff has suffered and will continue to suffer damages in an amount to be proven at trial.

ANSWER: Tesla denies the allegations and characterizations of Paragraph 176.

COUNT XI

(Tesla's Infringement of U.S. Patent No. 7,181,743)

177. Answers to Paragraphs 1 through 176 are incorporated by reference as if fully set forth herein.

ANSWER: Tesla incorporates herein its responses to the allegations set forth above in Paragraphs 1 through 176.

178. **Direct Infringement.** Defendant directly infringed, and continues to directly infringe, literally and/or by the doctrine of equivalents, individually and/or jointly, the '743 Patent, by designing, developing, making, manufacturing, utilizing, distributing, providing, testing, selling, and/or offering for sale and/or importing into the United States the Accused Products that infringe the '743 Patent including, but not limited to, Tesla automotive vehicles, and all past, current and future Tesla products that operate in the same or substantially similar manner as the specifically identified products and components (collectively, "Example Count XI Automotive Vehicles"). The Accused Products identified in the example charts incorporated in Example Count XI Automotive Vehicles infringe at least the exemplary claims of the '743 Patent identified in the charts incorporated into this Count XI (the "Example '743 Patent Claims") literally and/or by the doctrine of equivalents.

ANSWER: Tesla denies the allegations and characterizations of Paragraph 178.

179. On information and belief, Defendant has also infringed and continues to directly infringe, literally and/or under the doctrine of equivalents, the Exemplary '743 Patent Claims, by internal testing and use of the Example Count XI Automotive Vehicles.

ANSWER: Tesla denies the allegations and characterizations of Paragraph 179.

180. **Willful Blindness.** Defendant knew of the '743 Patent, or should have known of the '743 Patent, but was willfully blind to its existence. Defendant has had actual knowledge of the '743 Patent not later than receipt of a letter, dated April 11, 2024, and received on the same date. By the time of trial, Defendant will have known and intended (since receiving such notice) that its continued actions would infringe and actively induce and contribute to the infringement of one or more claims of the '743 Patent. See Exhibit 20.

ANSWER: Tesla admits the '743 Patent was listed in a letter purportedly sent to Tesla on April 11, 2024 (Exhibit 20). Tesla denies the remaining allegations and characterizations of Paragraph 180. Further, Tesla denies the allegations and characterizations set forth in Exhibit 20.

181. **Induced Infringement.** Defendant has also induced, and continues to induce, the infringement of the '743 Patent by others – including, but not limited to, inducing their consumers, partners, vendors, and/or third parties to use their Accused Products, such as Example Count XI Automotive Vehicles, in an infringing manner as described above, including encouraging and instructing their consumers, partners, vendors, and/or third parties to infringe the '743 Patent.

ANSWER: Tesla denies the allegations and characterizations of Paragraph 181.

182. Defendant therefore actively, knowingly, and intentionally has committed, and continues to commit, affirmative acts that cause infringement, literally and/or by the doctrine of equivalents, of one or more claims of the '743 Patent with knowledge of the '743 Patent and

knowledge that the induced acts constitute infringement of one or more claims of the ’743 Patent. Defendant has actively induced others, including, but not limited to, consumers, partners, vendors, and/or third parties, who use the Example Count XI Automotive Vehicles to infringe the ’743 Patent, literally and/or by the doctrine of equivalents, throughout the United States, including within this District, by, among other things, advertising, promoting, and instructing the infringing use of the Example Count XI Automotive Vehicles.

ANSWER: Tesla denies the allegations and characterizations of Paragraph 182.

183. **Contributory Infringement.** Defendant actively, knowingly, and intentionally has committed, and continues to commit contributory infringement, literally and/or by the doctrine of equivalents, by, inter alia, knowingly providing software and technologies that when used, cause the direct infringement of one or more claims of the ’743 Patent by their consumers, partners, vendors, and/or third parties, and which have no substantial non-infringing uses, or include a separate and distinct technology that is especially made or especially adapted for use in infringement of the ’743 Patent, and is not a staple article or commodity of commerce suitable for substantial non-infringing use.

ANSWER: Tesla denies the allegations and characterizations of Paragraph 183.

184. Defendant therefore actively, knowingly, and intentionally has been and continues to materially contribute to their consumers’, partners’, vendors’, and/or third-parties’ infringement of the ’743 Patent, literally and/or by the doctrine of equivalents, by designing, developing, making, manufacturing, utilizing, distributing, providing, testing, selling, and/or offering for sale and/or importing into the United States the Example Count XI Automotive Vehicles for use in a manner that infringes one or more claims of the ’743 Patent. Example Count XI Automotive

Vehicles are especially made or adapted for infringing the ’743 Patent and have no substantial non-infringing use.

ANSWER: Tesla denies the allegations and characterizations of Paragraph 184**.**

185. Exhibit 31 (claim charts) includes the Example Count XI Automotive Vehicles and Example ’743 Patent Claims. As set forth in these charts, the Example Count XI Automotive Vehicles practice the technology claimed by the ’743 Patent. Accordingly, the Example Count XI Automotive Vehicles incorporated in these charts satisfy all elements of the Example ’743 Patent Claims.

ANSWER: Tesla denies the allegations and characterizations of Paragraph 185 and those set forth in Exhibit 31 to the Complaint.

186. Intellectual Ventures therefore incorporates by reference in its allegations herein the claim charts of Exhibit 31.

ANSWER: Tesla denies the allegations and characterizations set forth in Exhibit 31 to the Complaint.

187. Intellectual Ventures is entitled to recover damages adequate to compensate for Defendant’s infringement of the ’743 Patent and will continue to be damaged by such infringement. Intellectual Ventures is entitled to recover damages from Defendant to compensate them for Defendant’s infringement, as alleged above, in an amount measured by no less than a reasonable royalty under 35 U.S.C. § 284, as well as enhanced damages pursuant to 35 U.S.C. § 284.

ANSWER: Tesla denies the allegations and characterizations of Paragraph 187.

188. As a result of Defendant’s acts of infringement, Plaintiff has suffered and will continue to suffer damages in an amount to be proven at trial.

ANSWER: Tesla denies the allegations and characterizations of Paragraph 188.

COUNT XII

(Tesla's Infringement of U.S. Patent No. 6,894,639)

189. Answers to Paragraphs 1 through 188 are incorporated by reference as if fully set forth herein.

ANSWER: Tesla incorporates herein its responses to the allegations set forth above in Paragraphs 1 through 188.

190. **Direct Infringement.** Defendant directly infringed, and continues to directly infringe, literally and/or by the doctrine of equivalents, individually and/or jointly, the '639 Patent, by designing, developing, making, manufacturing, utilizing, distributing, providing, testing, selling, and/or offering for sale and/or importing into the United States the Accused Products that infringe the '639 Patent including, but not limited to, Tesla automotive vehicles, and all past, current and future Tesla products that operate in the same or substantially similar manner as the specifically identified products and components (collectively, "Example Count XII Automotive Vehicles"). The Accused Products identified in the example charts incorporated in Example Count XII Automotive Vehicles infringe at least the exemplary claims of the '639 Patent identified in the charts incorporated into this Count XII (the "Example '639 Patent Claims") literally and/or by the doctrine of equivalents.

ANSWER: Tesla denies the allegations and characterizations of Paragraph 190.

191. On information and belief, Defendant has also infringed and continues to directly infringe, literally and/or under the doctrine of equivalents, the Exemplary '639 Patent Claims, by internal testing and use of the Example Count XII Automotive Vehicles.

ANSWER: Tesla denies the allegations and characterizations of Paragraph 191.

192. **Willful Blindness.** Defendant knew of the ’639 Patent, or should have known of the ’639 Patent, but was willfully blind to its existence. Defendant has had actual knowledge of the ’639 Patent not later than receipt of a letter, dated August 7, 2020 and received on the same date. Defendant also has had actual knowledge of the ’639 Patent not later than receipt of a letter, dated April 11, 2024, and received on the same date. By the time of trial, Defendant will have known and intended (since receiving such notice) that its continued actions would infringe and actively induce and contribute to the infringement of one or more claims of the ’639 Patent. See Exhibits 19 & 20.

ANSWER: Tesla admits the ’639 Patent was listed in letters purportedly sent to Tesla on August 7, 2020 (Exhibit 19) and April 11, 2024 (Exhibit 20). Tesla denies the remaining allegations and characterizations of Paragraph 192. Further, Tesla denies the allegations and characterizations set forth in Exhibits 19 and 20.

193. **Induced Infringement.** Defendant has also induced, and continues to induce, the infringement of the ’639 Patent by others – including, but not limited to, inducing their consumers, partners, vendors, and/or third parties to use their Accused Products, such as Example Count XII Automotive Vehicles, in an infringing manner as described above, including encouraging and instructing their consumers, partners, vendors, and/or third parties to infringe the ’639 Patent.

ANSWER: Tesla denies the allegations and characterizations of Paragraph 193.

194. Defendant therefore actively, knowingly, and intentionally has committed, and continues to commit, affirmative acts that cause infringement, literally and/or by the doctrine of equivalents, of one or more claims of the ’639 Patent with knowledge of the ’639 Patent and knowledge that the induced acts constitute infringement of one or more claims of the ’639 Patent. Defendant has actively induced others, including, but not limited to, consumers, partners, vendors,

and/or third parties, who use the Example Count XII Automotive Vehicles to infringe the ’639 Patent, literally and/or by the doctrine of equivalents, throughout the United States, including within this District, by, among other things, advertising, promoting, and instructing the infringing use of the Example Count XII Automotive Vehicles.

ANSWER: Tesla denies the allegations and characterizations of Paragraph 194.

195. **Contributory Infringement.** Defendant actively, knowingly, and intentionally has committed, and continues to commit contributory infringement, literally and/or by the doctrine of equivalents, by, inter alia, knowingly providing software and technologies that when used, cause the direct infringement of one or more claims of the ’639 Patent by their consumers, partners, vendors, and/or third parties, and which have no substantial non-infringing uses, or include a separate and distinct technology that is especially made or especially adapted for use in infringement of the ’639 Patent, and is not a staple article or commodity of commerce suitable for substantial non-infringing use.

ANSWER: Tesla denies the allegations and characterizations of Paragraph 195.

196. Defendant therefore actively, knowingly, and intentionally has been and continues to materially contribute to their consumers’, partners’, vendors’, and/or third-parties’ infringement of the ’639 Patent, literally and/or by the doctrine of equivalents, by designing, developing, making, manufacturing, utilizing, distributing, providing, testing, selling, and/or offering for sale and/or importing into the United States the Example Count XII Automotive Vehicles for use in a manner that infringes one or more claims of the ’639 Patent. Example Count XII Automotive Vehicles are especially made or adapted for infringing the ’639 Patent and have no substantial non-infringing use.

ANSWER: Tesla denies the allegations and characterizations of Paragraph 196.

197. Exhibit 32 (claim charts) includes the Example Count XII Automotive Vehicles and Example '639 Patent Claims. As set forth in these charts, the Example Count XII Automotive Vehicles practice the technology claimed by the '639 Patent. Accordingly, the Example Count XII Automotive Vehicles incorporated in these charts satisfy all elements of the Example '639 Patent Claims.

ANSWER: Tesla denies the allegations and characterizations of Paragraph 197 and those set forth in Exhibit 32 to the Complaint.

198. Intellectual Ventures therefore incorporates by reference in its allegations herein the claim charts of Exhibit 32.

ANSWER: Tesla denies the allegations and characterizations set forth in Exhibit 32 to the Complaint.

199. Intellectual Ventures is entitled to recover damages adequate to compensate for Defendant's infringement of the '639 Patent and will continue to be damaged by such infringement. Intellectual Ventures is entitled to recover damages from Defendant to compensate them for Defendant's infringement, as alleged above, in an amount measured by no less than a reasonable royalty under 35 U.S.C. § 284, as well as enhanced damages pursuant to 35 U.S.C. § 284.

ANSWER: Tesla denies the allegations and characterizations of Paragraph 199.

200. As a result of Defendant's acts of infringement, Plaintiff has suffered and will continue to suffer damages in an amount to be proven at trial.

ANSWER: Tesla denies the allegations and characterizations of Paragraph 200.

DEMAND FOR JURY TRIAL

201. Under Rule 38(b) of the Federal Rules of Civil Procedure, Plaintiff respectfully requests a trial by jury on all issues so triable.

ANSWER: This section of the Complaint sets forth IV's demand for a jury trial, to which no response is required. In accordance with Federal Rule of Civil Procedure 38(b), Tesla similarly demands a trial by jury on all issues so triable.

PRAYER FOR RELIEF

WHEREFORE, Plaintiff respectfully requests the following relief:

A. A judgment that the Patents-in-Suit are valid and enforceable;

B. A judgment that Defendant directly infringes, contributorily infringes, and/or actively induces infringement of one or more claims of each of the Patents-in-Suit;

C. A judgment that awards Plaintiff all damages adequate to compensate them for Defendant's direct infringement, willful infringement, contributory infringement, and/or induced infringement, of the Patents-in-Suit, including all pre- judgment and post- judgment interest at the maximum rate permitted by law;

D. A judgment that awards Plaintiff all appropriate damages under 35 U.S.C. § 284 for Defendant's past infringement with respect to the Patents-in-Suit;

E. A judgment that awards Plaintiff all appropriate damages under 35 U.S.C. § 284 for Defendant's infringement of the '805 Patent, '500 Patent '138 Patent, '153 Patent, '395 Patent, '416 Patent, '180 Patent, '158 Patent, '670 Patent, and '889 Patent, which continue to damage Plaintiff's business, causing irreparable harm for which there is no adequate remedy at law, unless enjoined by the Court;

F. A judgment that awards Plaintiff all appropriate damages under 35 U.S.C. § 284 for Defendant's continuing or future infringement, up until the date such judgment is entered with respect to the Patents-in-Suit, including ongoing royalties, pre- and post-judgment interest, costs, and disbursements as justified under 35 U.S.C. § 284;

G. A judgment that this case is exceptional under 35 U.S.C. § 285;

H. An accounting of all damages not presented at trial; and

I. A judgment that awards Plaintiff its costs, disbursements, attorneys' fees, and such further and additional relief as is deemed appropriate by the Court.

ANSWER: This section of the Complaint sets forth IV's requested relief, to which no response is required. Tesla denies that IV is entitled to any relief requested in any of Paragraphs A–I of the Prayer section of the Complaint or otherwise. To the extent any statement in that section is deemed to include any factual allegations, Tesla denies such allegations.

AFFIRMATIVE AND OTHER DEFENSES

Subject to the responses above, Tesla contends and asserts the following affirmative and other defenses in responses to the allegations in the Complaint. By asserting these defenses, Tesla does not admit that it bears the burden of proof on any issue and does not accept any burden it would not otherwise bear. Tesla's investigation of its defenses is continuing, and Tesla reserves the right to amend its Answer to allege and assert any additional affirmative defenses, at law or in equity, that may now exist or in the future be available based upon discovery and further investigation in this case.

FIRST DEFENSE

(Noninfringement of the Patents-in-Suit)

Tesla has not directly infringed, indirectly infringed, induced infringement, or contributed to infringement of any valid or enforceable claim of any of the Patents-in-Suit, and Tesla has not otherwise committed acts in violation of 35 U.S.C. § 271 or any other theory of infringement (e.g., the judicially created doctrine of equivalents).

SECOND DEFENSE

(Invalidity)

On information and belief, and subject to further discovery, each of the Patents-in-Suit is invalid for failure to comply with the requirements of 35 U.S.C. §§ 101, 102, 103, and/or 112, or any other applicably statutory provisions of Title 35 of the United States Code, or the rules and regulations of the United States Patent and Trademark Office.

THIRD DEFENSE

(Prosecution History Estoppel)

IV's claims are barred in whole or in part by reason of estoppel. IV is estopped from construing any valid claim of the Patents-in-Suit to be infringed or to have been infringed, either literally or by application of the doctrine of equivalents, by any product made, used, imported, sold, or offered for sale by Tesla in view of prior art and/or because of admissions, representations, and/or statements made to the Patent Office during prosecution of any application leading to the issuance of the Patents-in-Suit or any related patents, because disclosure or language in the specification of any Patent-in-Suit, and/or because of limitations in the claims of the Patents-in-Suit.

FOURTH DEFENSE

(Limitation on Damages)

IV is barred in whole or in part from recovering damages under 35 U.S.C. §§ 286, 287, and/or 288.

FIFTH DEFENSE

(Limitation on Remedies)

IV's remedies are limited under 28 U.S.C. § 1498(a). Tesla is not liable to the extent the Accused Products were used or manufactured by or for the United States, or to the extent accused activities were undertaken on behalf of the United States, according to at least 28 U.S.C. § 1498.

SIXTH DEFENSE

(Marking and Notice)

To the extent that IV and/or any predecessors in interest or any licensees to the Patents-in-Suit failed to properly mark any of their relevant products or materials as required by 35 U.S.C. § 287, or otherwise failed to give proper notice that Tesla's actions allegedly infringe the Patents-in-Suit, Tesla is not liable to IV for the acts alleged to have been performed before Tesla received actual notice that the Accused Products were allegedly infringing the Patents-in-Suit.

SEVENTH DEFENSE

(Unclean Hands/ Equitable Estoppel/ Acquiescence/ Waiver)

IV's attempted enforcement of the Patents-in-Suit against Tesla is barred by unclean hands, equitable estoppel, acquiescence, and/or waiver.

EIGHTH DEFENSE

(Ensnarement of Prior Art)

To the extent that IV alleges that Tesla infringes the Patents-in-Suit by equivalents, IV's claims for relief are barred, in whole or in part, by ensnaring the prior art.

NINTH DEFENSE

(Statute of Limitations)

To the extent IV seeks recovery for any alleged infringement committed more than six years prior to filing of the Complaint, such recovery is barred by 35 U.S.C. § 286.

TENTH DEFENSE

(License and Exhaustion)

To the extent that any sales of Accused Products, or components thereof, were authorized by IV or a predecessor or licensee of IV, IV's claims are precluded pursuant to the doctrine of express or implied license or by the doctrine of patent exhaustion.

ELEVENTH DEFENSE

(Failure to State a Claim Upon Which Relief May Be Granted)

IV's Complaint fails to state a claim upon which relief may be granted, including but not limited to because the Patents-in-Suit contain claims that cannot be infringed as made, used, sold, offered for sale, or imported into the United States by Tesla.

TWELFTH DEFENSE

(Implied Waiver of Patent Rights)

IV's claims are barred by the doctrine of implied waiver of patent rights because IV's related entities, affiliates, and successors- and/or predecessors-in-interest had a duty to disclose their issued patents and/or patent applications to a standard setting organization, such as European Telecommunications Standards Institute ("ETSI"), and those entities breached that duty. IV steps into the shoes of its related entities, affiliates, and successors- and/or predecessors-in-interest, and IV is subject to the consequences of those entities' failure to disclose the Patents-in-Suit.

THIRTEENTH DEFENSE

(Unenforceability - Breach of Contract)

IV 's related entities, affiliates, and successors- and/or predecessors-in-interest breached their duty to disclose the at least one of the Patents-in-Suit as an essential patent to ETSI or another standard setting organization. Failure to disclose an essential patent to ETSI is a breach of contract that precludes enforcement of that patent. Further, IV's related entities, affiliates, and/or

successors- and predecessors-in-interest breached their duty under ETSI, or other standard setting organizations, to offer Fair, Reasonable, and Nondiscriminatory ("FRAND") and/or reasonable and nondiscriminatory ("RAND") licensing terms for its standard essential patents, renderings the patents unenforceable. IV steps into the shoes of its related entities, affiliates, and successors- and/or predecessors-in-interest, and IV is subject to the consequences of its own, and those entities', failure to disclose the Patents-in-Suit and offer a license on FRAND terms.

FOURTEENTH DEFENSE

(Damages are Limited to Fair, Reasonable, and Nondiscriminatory Licensing Terms)

To the extent IV seeks recovery for any alleged infringement that exceeds FRAND/RAND terms, such recovery is barred by IV's related entities', affiliates', and successors- and/or predecessors-in-interest's affiliation with ETSI and obligations related to ETSI standards, including the obligation to license the Patents-in-Suit on FRAND/RAND terms. IV steps into the shoes of its related entities, affiliates, and successors- and/or predecessors-in-interest, and IV is subject to the consequences of its own, and those entities', failure to offer a license on FRAND/RAND terms.

FIFTEENTH DEFENSE

(Promissory Estoppel)

IV's claims are barred in whole or in part by reason of promissory estoppel. Tesla detrimentally relied on IV's related entities', affiliates', and successors- and/or predecessors-in-interest's express or implied promise to license the Patents-in-Suit on FRAND/RAND terms based on those entities' affiliation with ETSI and obligations related to ETSI standards. As a member of the telecommunications community, Tesla's reliance on the express or implied promise was reasonable. IV steps into the shoes of its related entities, affiliates, and successors- and/or

predecessors-in-interest, and IV is subject to the consequences of those entities' express or implied promise to license the Patents-in-Suit on FRAND/RAND terms.

SIXTEENTH DEFENSE

(Patent Misuse)

IV's attempted enforcement of the Patents-in-Suit against Tesla is barred based on IV's attempts to extract royalties beyond the scope of the Patents-in-Suit and IV's anti-competitive enforcement of the Patents-in-Suit.

SEVENTEENTH DEFENSE

(Laches)

IV's claims are barred in whole or in part by the doctrine of laches because the applicants of certain Patents-in-Suit unreasonably delayed the prosecution of their patent applications and because IV unreasonably delayed in asserting its infringement claims and this delay caused prejudice to Tesla.

EIGHTEENTH DEFENSE

(Bayh-Dole Act)

IV's claims are barred in whole or in part by the Bayh-Dole Act because, for example, IV does not have ownership and licensing rights of certain Patents-in-Suit to the extent the purported inventions were made by the federal government or under federal government funding, such as grants or contracts.

RESERVATION OF ALL AFFIRMATIVE DEFENSES

Tesla hereby gives notice that it intends to rely upon any other matter constituting an avoidance or affirmative defense as set forth in Rule 8(c) of the Federal Rules of Civil Procedure, and that it reserves the right to seek leave to amend this Answer to add to, amend, withdraw, or modify these defenses as its investigation continues and as discovery may require.

TESLA'S COUNTERCLAIMS

1. Counterclaim-plaintiff Tesla, Inc. ("Tesla") hereby asserts the following counterclaims against Counterclaim-defendant Intellectual Venture II, LLC's ("IV") as follows:

THE PARTIES

2. Tesla is a corporation organized and existing under the laws of the State of Texas with its headquarters located at 1 Tesla Road, Austin, TX 78725.

3. On information and belief, IV is a Delaware limited liability company having its principal place of business located at 3150 139th Avenue SE, Bellevue, Washington 98005.

JURISDICTION AND VENUE

4. Subject to its defenses and denials, Tesla alleges that this Court has subject matter jurisdiction pursuant to 28 U.S.C. §§ 1331 and 1338(a) with respect to claims arising under the patent laws, 35 U.S.C. § 101 et seq., and pursuant to the Declaratory Judgment Act, 28 U.S.C. §§ 2201, et seq., based on an actual controversy between IV and Tesla due to IV's allegations of infringement against Tesla of U.S. Patent Nos. 7,336,805 ("the '805 Patent"); 9,706,500 ("the '500 Patent"); 10,292,138 ("the '138 Patent"); 10,952,153 ("the '153 Patent"); 8,898,395 ("the '395 Patent"); 10,136,416 ("the '416 Patent"); 7,916,180 ("the '180 Patent"); 9,232,158 ("the '158 Patent"); 7,181,743 ("the '743 Patent"); 6,894,639 ("the '639 Patent"); 11,206,670 ("the '670 Patent"); and 11,664,889 ("the '889 Patent") (collectively, "Patents-in-Suit") under the patent paws of the United States.

5. The Court has personal jurisdiction over IV, which has availed itself of this judicial district by filing its original and amended complaints against Tesla in this Court.

6. Subject to Tesla's defenses and denials, and based solely on IV's filing of its Complaint, venue is proper in this judicial district under 28 U.S.C. §§ 1391 and 1400 for Tesla's counterclaims.

IV'S COMPLAINT AND INFRINGEMENT ALLEGATIONS AGAINST TESLA

7. On April 12, 2024, IV filed its Complaint (D.I. 1) against Tesla in the Western District of Texas, Waco Division, alleging infringement of the Patents-in-Suit.

8. IV, through its Complaint (at ¶ 6), alleges that Tesla's "automotive vehicles and components thereof" ("Accused Products") infringe the Patents-in-Suit, contribute to the infringement by others, and/or induces others to commit acts of patent infringement in the State of Texas and the Western District of Texas.

COUNT I: DECLARATORY JUDGMENT OF INVALIDITY OF U.S. PATENT NO. 7,336,805

9. Tesla restates and incorporates by references the responses and allegations contained in the foregoing paragraphs, as if fully set forth herein.

10. The '805 patent is invalid for failure to meet the conditions of patentability and/or otherwise comply with one or more of the provisions of 35 U.S.C. § 101 et seq., including but not limited to 35 U.S.C. § 101, 102, 103, and/or 112, and any other applicable statutory provisions of Title 35 of the United States Code, or the rules and Regulations of the United States Patent and Trademark Office. For example, the '805 patent is invalid at least under 35 U.S.C. § 103 because it is rendered obvious by prior art such as U.S. Patent No. 5,790,403 to Shigeto Nakayama ("Nakayama") when combined with the knowledge of a person of ordinary skill in the art. Similar to the purported teachings of the '805 patent, Nakayama discloses "a system for processing lane images for a vehicle which enables stable and reliable vehicle self-navigation by setting the regions of the image to be processed such that the lane recognition is unaffected by the presence in the image of a preceding vehicle or other such obstacle and by selecting the optimum lane in a road environment in which obstacles such as other vehicles are present." Nakayama at 1:40–49.

11. As a result of IV's allegations, an actual case or controversy exists between IV and Tesla as to the validity of the '805 patent.

12. Accordingly, Tesla is entitled to a declaratory judgment that the '805 patent is invalid.

COUNT II: DECLARATORY JUDGMENT OF INVALIDITY OF U.S. PATENT NO. 9,706,500

13. Tesla restates and incorporates by references the responses and allegations contained in the foregoing paragraphs, as if fully set forth herein.

14. The '500 patent is invalid for failure to meet the conditions of patentability and/or otherwise comply with one or more of the provisions of 35 U.S.C. § 101 et seq., including but not limited to 35 U.S.C. § 101, 102, 103, and/or 112, and any other applicable statutory provisions of Title 35 of the United States Code, or the rules and Regulations of the United States Patent and Trademark Office. For example, the '500 patent is invalid at least under 35 U.S.C. § 103 because it is rendered obvious by prior art such as WO 2000/57574 to Ariela Zeira et al. ("Zeira") and/or U.S. Patent No. 7,197,021 to Myeong-Sook Seo et al. ("Seo") when combined with the knowledge of a person of ordinary skill in the art. Similar to the purported teachings of the '500 patent, Zeira discloses "[t]he first station transmits power commands based on in part a reception quality of the received communications," "[t]he first station transmits a second communication having a transmission power level in a first time slot," "[t]he second station receives the second communication and the power commands," "[a] power level of the second communication as received is measured," and "[a] path loss estimate is determined based on in part the measured received second communication power level and the first communication transmission power level." Zeira at 4:18–5:8. And Seo discloses multi-level transmit power control command. For instance, Seo discloses "as illustrated in FIG. 20, the number of downlink transmission bits for transmitting

the uplink power offsets can be set to K" and "since uplink power offsets except the uplink power offset 0 dB have 2 dB, 4 dB, 6 dB and 8 dB, they can be expressed with 2 bits." Seo at 22:40–47.

15. As a result of IV's allegations, an actual case or controversy exists between IV and Tesla as to the validity of the '500 patent.

16. Accordingly, Tesla is entitled to a declaratory judgment that the '500 patent is invalid.

COUNT III: DECLARATORY JUDGMENT OF INVALIDITY OF U.S. PATENT NO. 10,292,138

17. Tesla restates and incorporates by references the responses and allegations contained in the foregoing paragraphs, as if fully set forth herein.

18. The '138 patent is invalid for failure to meet the conditions of patentability and/or otherwise comply with one or more of the provisions of 35 U.S.C. § 101 et seq., including but not limited to 35 U.S.C. § 101, 102, 103, and/or 112, and any other applicable statutory provisions of Title 35 of the United States Code, or the rules and Regulations of the United States Patent and Trademark Office. For example, the '138 patent is invalid at least under 35 U.S.C. § 103 because it is rendered obvious by prior art such as U.S. Patent Nos. 6,850,540 to Janne Johannes Peisa et al. ("Peisa") and/or 7,869,461 to Joachim Lohr et al. ("Lohr"). Like the purported teachings of the '138 patent, Peisa discloses methods and systems that are adapted for use in the UMTS Terrestrial Radio Access Network and "a two-step scheduling process in a scheduler 735 located in the MAC layer," which can be located in "the UE." Peisa at 1:64–2:16, 18:9–18. And Lohr discloses "a method for transmitting data from a mobile terminal to a radio access network of a mobile communication system, the mobile terminal comprising a medium access control entity and to a mobile terminal," "individual priorities depending on the scheduling mode which are used by the mobile terminal to schedule the transmission data or to multiplex different transmission data of different radio bearers

onto a transport channel," and "a method and mobile terminal allowing a scheduling mode dependent scheduling of data transmissions by foreseeing and setting a flag for each logical channel depending on the scheduling mode of the associated radio bearer." Lohr at Abstract.

19. As a result of IV's allegations, an actual case or controversy exists between IV and Tesla as to the validity of the '138 patent.

20. Accordingly, Tesla is entitled to a declaratory judgment that the '138 patent is invalid.

COUNT IV: DECLARATORY JUDGMENT OF INVALIDITY OF U.S. PATENT NO. 10,952,153

21. Tesla restates and incorporates by references the responses and allegations contained in the foregoing paragraphs, as if fully set forth herein.

22. The '153 patent is invalid for failure to meet the conditions of patentability and/or otherwise comply with one or more of the provisions of 35 U.S.C. § 101 et seq., including but not limited to 35 U.S.C. § 101, 102, 103, and/or 112, and any other applicable statutory provisions of Title 35 of the United States Code, or the rules and Regulations of the United States Patent and Trademark Office. For example, the '153 patent is invalid at least under 35 U.S.C. § 103 because it is rendered obvious by prior art such as WO 2000/57574 to Ariela Zeira et al. ("Ziera") and/or U.S. Patent No. 7,197,021 to Myeong-Sook Seo et al. ("Seo") when combined with the knowledge of a person of ordinary skill in the art. Similar to the purported teachings of the '153 patent, Ziera discloses "[t]he first station transmits power commands based on in part a reception quality of the received communications," "[t]he first station transmits a second communication having a transmission power level in a first time slot," "[t]he second station receives the second communication and the power commands," "[a] power level of the second communication as received is measured," and "[a] path loss estimate is determined based on in part the measured

received second communication power level and the first communication transmission power level." Ziera at 4:18–5:8. And Seo discloses multi-level transmit power control command. For instance, the Seo discloses "as illustrated in FIG. 20, the number of downlink transmission bits for transmitting the uplink power offsets can be set to K" and "since uplink power offsets except the uplink power offset 0 dB have 2 dB, 4 dB, 6 dB and 8 dB, they can be expressed with 2 bits." Seo at 22:40–47.

23. As a result of IV's allegations, an actual case or controversy exists between IV and Tesla as to the validity of the '153 patent.

24. Accordingly, Tesla is entitled to a declaratory judgment that the '153 patent is invalid.

COUNT V: DECLARATORY JUDGMENT OF INVALIDITY OF U.S. PATENT NO. 8,898,395

25. Tesla restates and incorporates by references the responses and allegations contained in the foregoing paragraphs, as if fully set forth herein.

26. The '395 patent is invalid for failure to meet the conditions of patentability and/or otherwise comply with one or more of the provisions of 35 U.S.C. § 101 et seq., including but not limited to 35 U.S.C. § 101, 102, 103, and/or 112, and any other applicable statutory provisions of Title 35 of the United States Code, or the rules and Regulations of the United States Patent and Trademark Office. For example, the '395 patent is invalid at least under 35 U.S.C. § 103 because it is rendered obvious by prior art such as U.S. Patent No. 6,067,618 to Harold J. Weber ("Weber") when combined with the knowledge of a person of ordinary skill in the art. Similar to the purported teachings of the '395 patent, Weber discloses "[i]n an IDE/ATA interface environment, a typical arrangement includes a setting of ROM-BIOS to only recognize a MASTER drive with a subsequent user determined swapping of MASTER and SLAVE modes between at least two hard drives utilizing a manual switch-over to obtain operation under operating system and programs uniquely installed

on each of the intently selected MASTER drives, while denying access to the alternant SLAVE drive." Weber at Abstract.

27. As a result of IV's allegations, an actual case or controversy exists between IV and Tesla as to the validity of the '395 patent.

28. Accordingly, Tesla is entitled to a declaratory judgment that the '395 patent is invalid.

COUNT VI: DECLARATORY JUDGMENT OF INVALIDITY OF U.S. PATENT NO. 10,136,416

29. Tesla restates and incorporates by references the responses and allegations contained in the foregoing paragraphs, as if fully set forth herein.

30. The '416 patent is invalid for failure to meet the conditions of patentability and/or otherwise comply with one or more of the provisions of 35 U.S.C. § 101 et seq., including but not limited to 35 U.S.C. § 101, 102, 103, and/or 112, and any other applicable statutory provisions of Title 35 of the United States Code, or the rules and Regulations of the United States Patent and Trademark Office. For example, the '416 patent is invalid under 35 U.S.C. § 112 because the specification does contain adequate written description for at least the following limitation: "a receiver, the receiver configured to receive broadcast information including a plurality of bits, wherein each of the plurality of bits indicates a respective time interval that physical shared channel resources are utilized to signal channels."

31. As a result of IV's allegations, an actual case or controversy exists between IV and Tesla as to the validity of the '416 patent.

32. Accordingly, Tesla is entitled to a declaratory judgment that the '416 patent is invalid.

COUNT VII: DECLARATORY JUDGMENT OF INVALIDITY OF U.S. PATENT NO. 7,916,180

33. Tesla restates and incorporates by references the responses and allegations contained in the foregoing paragraphs, as if fully set forth herein.

34. The ’180 patent is invalid for failure to meet the conditions of patentability and/or otherwise comply with one or more of the provisions of 35 U.S.C. § 101 et seq., including but not limited to 35 U.S.C. § 101, 102, 103, and/or 112, and any other applicable statutory provisions of Title 35 of the United States Code, or the rules and Regulations of the United States Patent and Trademark Office. For example, the ’180 patent is invalid at least under 35 U.S.C. § 103 because it is rendered obvious by prior art such as U.S. Patent No. 7,526,103 to Kenneth Schofield and Niall R. Lynam (“Schofield”) when combined with the knowledge of a person of ordinary skill in the art. Similar to the purported teachings of the ’180 patent, Schofield discloses “an imaging system for a vehicle that is operable to identify and read traffic control signage as the vehicle travels along a road,” “[t]he system may provide an information display and/or alert to a driver of the vehicle in response to the images captured by a camera or imaging device of the vehicle,” and “[t]he imaging system of the present invention may also process captured images and control one or more accessories in response to such processing.” Schofield at 1:37–44.

35. As a result of IV’s allegations, an actual case or controversy exists between IV and Tesla as to the validity of the ’180 patent.

36. Accordingly, Tesla is entitled to a declaratory judgment that the ’180 patent is invalid.

COUNT VIII: DECLARATORY JUDGMENT OF INVALIDITY OF U.S. PATENT NO. 9,232,158

37. Tesla restates and incorporates by references the responses and allegations contained in the foregoing paragraphs, as if fully set forth herein.

38. The ’158 patent is invalid for failure to meet the conditions of patentability and/or otherwise comply with one or more of the provisions of 35 U.S.C. § 101 et seq., including but not limited to 35 U.S.C. § 101, 102, 103, and/or 112, and any other applicable statutory provisions of Title 35 of the United States Code, or the rules and Regulations of the United States Patent and Trademark Office. For example, the ’158 patent is invalid at least under 35 U.S.C. § 103 because it is rendered obvious by prior art such as U.S. Patent No. 7,453,514 to John Louis Warpakowski Furlan and Ariel Braunstein (“Furlan”) when combined with the knowledge of a person of ordinary skill in the art. Similar to the purported teachings of the ’158 patent, Furlan discloses “a digital photography device” with “a shutter, a sensor, and a flash.” Furlan at 2:10–12. “The sensor implements a rolling shutter timing mechanism” such that “[t]he alterable translucent state of the shutter controls the sensor’s exposure to the photographic effects of ambient light during a picture using the pulsed illumination.” *Id.* at 2:12–18.

39. As a result of IV’s allegations, an actual case or controversy exists between IV and Tesla as to the validity of the ’158 patent.

40. Accordingly, Tesla is entitled to a declaratory judgment that the ’158 patent is invalid.

COUNT IX: DECLARATORY JUDGMENT OF INVALIDITY OF U.S. PATENT NO. 7,181,743

41. Tesla restates and incorporates by references the responses and allegations contained in the foregoing paragraphs, as if fully set forth herein.

42. The ’743 patent is invalid for failure to meet the conditions of patentability and/or otherwise comply with one or more of the provisions of 35 U.S.C. § 101 et seq., including but not limited to 35 U.S.C. § 101, 102, 103, and/or 112, and any other applicable statutory provisions of Title 35 of the United States Code, or the rules and Regulations of the United States Patent and

Trademark Office. For example, the ’743 patent is invalid at least under 35 U.S.C. § 103 because it is rendered obvious by prior art such as U.S. Patent No. 6,324,580 to Anita Jindal et al. (“Jindal”) when combined with the knowledge of a person of ordinary skill in the art. Similar to the purported teachings of the ’743 patent, Jindal discloses “[a]A method is provided for load balancing requests for a replicated service or application among a plurality of servers operating instances of the replicated service or application,” and “[a] policy is selected for choosing a preferred server from the plurality of servers according to one or more specified status or operational characteristics of the servers, such as the least-loaded or closest server.” Jindal at Abstract.

43. As a result of IV’s allegations, an actual case or controversy exists between IV and Tesla as to the validity of the ’743 patent.

44. Accordingly, Tesla is entitled to a declaratory judgment that the ’743 patent is invalid.

COUNT X: DECLARATORY JUDGMENT OF INVALIDITY OF U.S. PATENT NO. 6,894,639

45. Tesla restates and incorporates by references the responses and allegations contained in the foregoing paragraphs, as if fully set forth herein.

46. The ’639 patent is invalid for failure to meet the conditions of patentability and/or otherwise comply with one or more of the provisions of 35 U.S.C. § 101 et seq., including but not limited to 35 U.S.C. § 101, 102, 103, and/or 112, and any other applicable statutory provisions of Title 35 of the United States Code, or the rules and Regulations of the United States Patent and Trademark Office. For example, the ’639 patent is invalid at least under 35 U.S.C. § 103 because it is rendered obvious by prior art such as U.S. Patent No. 5,263,097 to Alan J. Katz and Michael T. Gately (“Katz”) when combined with the knowledge of a person of ordinary skill in the art. Similar to the purported teachings of the ’639 patent, Katz discloses “a method for distinguishing targets

from clutter, comprising the steps of inputting data (e.g., one-dimensional or multi-dimensional data, such as digitized infrared imagery, digitized TV imagery, speech samples, or radar samples), extracting feature information (e.g., contrast-based and texture-based) from the data, extracting parameter information (e.g., lighting, time-of-day, ambient temperature, and context of scene, sensor characteristics) from the data, normalizing the feature information with said parameter information to produce parameter normalized feature information, inputting said parameter normalized feature information into the classification procedure (e.g., parametric and non-parametric techniques and one-class, two-class, or multi-class classification procedures), operating said classification procedure on said parameter normalized feature information, and outputting target and clutter data." Katz at 1:61–2:11.

47. As a result of IV's allegations, an actual case or controversy exists between IV and Tesla as to the validity of the '639 patent.

48. Accordingly, Tesla is entitled to a declaratory judgment that the '639 patent is invalid.

COUNT XI: DECLARATORY JUDGMENT OF INVALIDITY OF U.S. PATENT NO. 11,206,670

49. Tesla restates and incorporates by references the responses and allegations contained in the foregoing paragraphs, as if fully set forth herein.

50. The '670 patent is invalid for failure to meet the conditions of patentability and/or otherwise comply with one or more of the provisions of 35 U.S.C. § 101 et seq., including but not limited to 35 U.S.C. § 101, 102, 103, and/or 112, and any other applicable statutory provisions of Title 35 of the United States Code, or the rules and Regulations of the United States Patent and Trademark Office. For example, the '670 patent is invalid at least under 35 U.S.C. § 103 because it is rendered obvious by prior art such as U.S. Patent No. 9,031,019 to Youngbum Kim et al. ("Kim")

when combined with the knowledge of a person of ordinary skill in the art. Similar to the purported teachings of the ’670 patent, Kim discloses a “system access method of a narrowband terminal is provided for supporting both wideband and narrowband terminals in a cellular radio communication system.” Kim at Abstract. Further, Kim discloses “a UE procedure for receiving L-MIB and L-SIB and performing a random access procedure.” *Id.* at 12:19–40.

51. As a result of IV’s allegations, an actual case or controversy exists between IV and Tesla as to the validity of the ’670 patent.

52. Accordingly, Tesla is entitled to a declaratory judgment that the ’670 patent is invalid.

COUNT XII: DECLARATORY JUDGMENT OF INVALIDITY OF U.S. PATENT NO. 11,664,889

53. Tesla restates and incorporates by references the responses and allegations contained in the foregoing paragraphs, as if fully set forth herein.

54. The ’889 patent is invalid for failure to meet the conditions of patentability and/or otherwise comply with one or more of the provisions of 35 U.S.C. § 101 et seq., including but not limited to 35 U.S.C. § 101, 102, 103, and/or 112, and any other applicable statutory provisions of Title 35 of the United States Code, or the rules and Regulations of the United States Patent and Trademark Office. For example, the ’889 patent is invalid at least under 35 U.S.C. § 103 because it is rendered obvious by prior art such as European Patent Application No. EP 1681780 A1 to Takashi Dateki (“Dateki”) when combined with the knowledge of a person of ordinary skill in the art. Similar to the purported teachings of the ’889 patent, Dateki discloses “[t]he wireless communication scheme used in the wireless communication between the mobile station 50c and the base stations 50a and 50b may correspond to the W-CDMA (Wide-Code Division Multiple Access) scheme, the OFDM (Orthogonal Frequency Division Multiplexing) scheme, or other various schemes. Also, it

is noted that transmission power control (TPC) information is transmitted from the base stations 50a and 50b to the mobile station 50c at predetermined intervals via downlink channels (dedicated channels) so that a signal transmitted from the mobile station 50c to the base stations 50a and 50b may be received with a suitable power that is sufficient for proper signal reception but is below a level that may cause interference with other channels." Dateki at [0003]. Further, Dateki discloses the use of the F-DPCH (Fractional Dedicated Physical Channel) (*e.g.*, 3GPP Rl-031073) "to enhance the W-CDMA system," and "the same diffusion code is assigned to the pilot signals and transmission power control (TPC) information of a dedicated channel for plural users, and transmission is conducted through time division multiplexing within the same slot." *Id.* at [0017].

55. As a result of IV's allegations, an actual case or controversy exists between IV and Tesla as to the validity of the '889 patent.

56. Accordingly, Tesla is entitled to a declaratory judgment that the '889 patent is invalid.

COUNT XIII: BREACH OF CONTRACT

57. Tesla restates and incorporates by references the responses and allegations contained in the foregoing paragraphs, as if fully set forth herein.

58. On information and belief, IV and/or its related entities, affiliates, and successors- and predecessors-in-interest, is or was a member of the European Telecommunications Standards Institute ("ETSI").

59. ETSI is a standard-setting organization that develops standards for various telecommunications industries including, for example, transportation, network, and wireless systems.[8]

[8] https://www.etsi.org/technologies

60. On information and belief, IV, through its related entities, affiliates, and successors- and predecessors-in-interest, had a contractual obligation to disclose to ETSI patents that are potentially essential to any ETSI standard. On information and belief, this obligation included the duty to disclose to ETSI at least one of the Patents-in-Suit. Specifically, IV steps into the shoes of its related entities, affiliates, and successors- and predecessors-in-interest and is subject to the consequences of its related entities', affiliates', and successors- and predecessors-in-interest's failure to disclose the Patents-in-Suit.

61. On information and belief, through its participation, implementation and/or declarations, IV, including its related entities, affiliates, and successors- and predecessors-in-interest, has committed to license any patent essential to practice an ETSI standard, to all implementers of those standards. On information and belief, IV is bound by the fair, reasonable, and nondiscriminatory ("FRAND") and/or reasonable and nondiscriminatory ("RAND") contractual commitments and obligations that it made and/or created, including with respect to at least one of the Patents-in-Suit to the extent necessary to practice an ETSI standard.

62. As an implementer of ETSI standards, Tesla is an intended third-party beneficiary to and obtains the benefit of the contractual commitments and obligations of IV, including their related entities, affiliates, and successors- and predecessors-in-interest, with respect to the Patents-in-Suit to the extent necessary to practice an ETSI standard.

63. As a member of the telecommunications community and the public at large, Tesla is an intended third-party beneficiary to and obtains the benefit of the contractual commitments and obligations of IV, including their related entities, affiliates, and successors- and predecessors-in-interest, with respect to each Patent-in-Suit to the extent necessary to practice an ETSI standard.

64. Despite being under an obligation to disclose all patents that might be essential to an ETSI standard, and benefitting from participation in ETSI, IV did not disclose to ETSI at least one of the Patents-in-Suit.

65. Further, IV has failed to offer Tesla any license on FRAND/RAND terms to at least one of the Patents-in-Suit, to the extent that they are essential to the practice of an ETSI standard. Specifically, IV initiated this suit before offering to Tesla a license of the Patents-in-Suit on FRAND/RAND terms. This suit places excessive pressure on Tesla to license the Patents-in-Suit at supra-competitive prices and destroys the possibility of true FRAND/RAND negotiations.

66. Thus, IV breached its contractual obligations and the Patents-in-Suit are deemed unenforceable.

67. As a result of these and other contractual breaches, Tesla has been injured in its business and property. Tesla has been forced to expend resources defending this case, including against IV's claim of infringement, and has suffered or faces the threat of increased costs, loss of profits, loss of customers or potential customers, loss of goodwill and product image, uncertainty in business planning, and uncertainty among customers and potential customers.

EXCEPTIONAL CASE

68. On information and belief, this is an exceptional case entitling Tesla to an award of its attorneys' fees incurred in connection with defending and prosecuting this action pursuant to 35 U.S.C. § 285, as a result of, inter alia, IV's assertion of the Asserted Patents against Tesla with knowledge that Tesla does not infringe any valid claim of the Asserted Patents and/or that the Asserted Patents are invalid.

TESLA'S PRAYER FOR RELIEF

WHEREFORE, Tesla prays for judgment as follows:

A. A judgment for Tesla and against IV;

B. A judgment dismissing IV's Complaint against Tesla with prejudice;

C. A judgment that IV take nothing on its claims;

D. A declaration that Tesla has not infringed or induced others to infringe, either directly or indirectly, any valid claim of the Patents-in-Suit;

E. A declaration that the Patents-in-Suit are invalid;

F. A declaration that IV breached its contractual obligations by failing to notify ETSI of certain essential patents and/or by failing to offer Tesla a patent license on FRAND terms;

G. A declaration that this case is exceptional pursuant to 35 U.S.C. § 285 and an award to Tesla of its reasonable costs and expenses of litigation, including attorneys' fees and expert witness fees; and

H. All other and further relief that the Court deems just and proper.

TESLA'S DEMAND FOR JURY TRIAL

In accordance with Federal Rule of Civil Procedure 38(b), Tesla demands a trial by jury on all issues so triable.

Dated: June 20, 2024

Respectfully Submitted,

FISH & RICHARDSON P.C.

By: */s/ Aamir A. Kazi*

Aamir A. Kazi (admitted to W.D. Tex.)
kazi@fr.com
1180 Peachtree Street, 21st Floor
Atlanta, GA 30309
(404) 892-5005

Daniel R. Gopenko (admitted to W.D. Tex.)
gopenko@fr.com
1000 Maine Ave SW, Suite 1000
Washington, DC 20024
(202) 783-5070

David M. Hoffman
Texas Bar No. 24046084
hoffman@fr.com
111 Congress Avenue, Suite 2000
Austin, TX 78701
(512) 472-5070
Matt Colvin
Texas Bar No. 24087331
Michael Ellis
Texas Bar No. 24102726
1717 Main Street, Suite 5000
Dallas, TX 75201
(214) 747-5070

Kathryn Quisenberry
Texas Bar No. 24105639
quisenberry@fr.com
909 Fannin Street, Suite 2100
Houston, TX 77010
(713) 654-5300

Bernard C. Cryan (pro hac vice forthcoming)
cryan@fr.com
12860 El Camino Real, Suite 400
San Diego, CA 92130
(858) 678-5070

TESLA, INC.

Alex Hanna (pro hac vice forthcoming)
DC Bar No. 975725
CA Reg. In-House Counsel
alehanna@tesla.com
3000 Hanover Street
Palo Alto, CA 94304
(650) 586-2409

COUNSEL FOR DEFENDANT,
TESLA, INC.

CERTIFICATE OF SERVICE

The undersigned hereby certifies that the foregoing document was filed electronically in compliance with Local Rule CV-5(a) on June 20, 2024, and was served via CM/ECF on all counsel of record.

/s/ Aamir A. Kazi
Aamir A. Kazi