IN THE UNITED STATES DISTRICT COURT
FOR THE WESTERN DISTRICT OF TEXAS
AUSTIN DIVISION

INTELLECTUAL VENTURES II LLC, *Plaintiff*, v. TESLA, INC., *Defendant*.	Civil Action No. 1:24-cv-00884-ADA

DEFENDANT'S SECOND SUPPLEMENTAL PRELIMINARY INVALIDITY CONTENTIONS

TABLE OF CONTENTS

I. INTRODUCTION 1

II. RESERVATIONS 2

III. INVALIDITY DUE TO ANTICIPATION 4

A. The ’639 Patent 5

1. Prior Art Patents and Patent Publications 5
2. Prior Art Publications 5
3. State of the Prior Art References 5

B. The ’743 Patent 6

1. Prior Art Patents and Patent Publications 6
2. Prior Art Publications 6
3. State of the Prior Art References 7

C. The ’805 Patent 7

1. Prior Art Patents and Patent Publications 7
2. Prior Art Publications 8
3. Known, Earlier Invented by Another, On Sale, In Use, and Other Prior Art 8
4. State of the Prior Art References 9

D. The ’180 Patent 14

1. Prior Art Patents and Patent Publications 14
2. Prior Art Publications 14
3. Known, Earlier Invented by Another, On Sale, In Use, and Other Prior Art 15
4. State of the Prior Art References 15

E. The ’395 Patent 16

1. Prior Art Patents and Patent Publications 16
2. Prior Art Publications 16
3. State of the Prior Art References 16

F. The ’158 Patent 17

1. Prior Art Patents and Patent Publications 17
2. Prior Art Publications 17
3. Known, Earlier Invented by Another, On Sale, In Use, and Other Prior Art 18
4. State of the Prior Art References 18

G. The ’500 Patent 18

1. Prior Art Patents and Patent Publications 18
2. Known, Earlier Invented by Another, On Sale, In Use, and Other Prior Art 19
3. State of the Prior Art References 19

H. The ’416 Patent 21

1. Prior Art Patents and Patent Publications 21
2. Prior Art Publications 21

3. Known, Earlier Invented by Another, On Sale, In Use, and Other Prior Art 21
4. State of the Prior Art References 21

I. The ’138 Patent 22

1. Prior Art Patents and Patent Publications 22
2. Prior Art Publications 23
3. Known, Earlier Invented by Another, On Sale, In Use, and Other Prior Art 23
4. State of the Prior Art References 23

J. The ’153 Patent 24

1. Prior Art Patents and Patent Publications 24
2. Known, Earlier Invented by Another, On Sale, In Use, and Other Prior Art 25
3. State of the Prior Art References 25

K. The ’670 Patent 26

1. Prior Art Patents and Patent Publications 26
2. Prior Art Publications 27
3. Known, Earlier Invented by Another, On Sale, In Use, and Other Prior Art 27
4. State of the Prior Art References 27

L. The ’889 Patent 28

1. Prior Art Patents and Patent Publications 28
2. Prior Art Publications 28
3. Known, Earlier Invented by Another, On Sale, In Use, and Other Prior Art 28
4. State of the Prior Art References 29

IV. INVALIDITY DUE TO OBVIOUSNESS 30

A. The ’639 Patent 33

1. The Generating References 34
2. The Extracting References 36
3. The Using References 39
4. The Outputting References 41
5. The Parallel References 44
6. The Target Classes References 46

B. The ’743 Patent 49

1. The Positive Integer References 49
2. The Receipt of Information References 53
3. The Response to Failure References 57
4. The Recovery Action References 61
5. The Application Storing References 66

C. The ’805 Patent 70

1. The Extracting References 70
2. The Storing References 74
3. The Steering References 78
4. The Driver References 81

5. The Semi-Automatic References 84
6. The New Trajectory References 88

D. The ’180 Patent 91

1. The Configuring References 92
2. The Controlling References 95
3. The Combining Data References 98
4. The Third and Fourth FOV References 101

E. The ’395 Patent 104

1. The Setting Multiple Bit References 104
2. The Instruction Agent References 106
3. The Rolling Back References 107
4. The Remains Set Until Execution References 109

F. The ’158 Patent 110

1. The Plurality References 111
2. The Pass Light References 114
3. The Integration Time References 117
4. The Incident Light References 120

G. The ’500 and ’153 Patents 123

1. The Single Physical Channel References 124
2. The Multi-level TPC Command References 128
3. The At Least Two Values Up or At Least Two Values Down References 132
4. The Indication that TPC Accumulation is Enabled References 135
5. The Pre-defined TPC Values References 138
6. The Uplink Shared Channel References 141

H. The ’416 Patent 144

1. The Physical Shared Channel References 145
2. The Signal Monitoring References 148
3. The Shared Frame References 151
4. The Two or More Timeslots References 155
5. The Power Down References 158

I. The ’138 Patent 161

1. The Receive Parameters Associated with Radio Bearers References 162
2. The Determine and Transmit Buffer Occupancies Associated with Radio Bearers References 166
3. The Receive Single Allocation of Uplink Resources References 170
4. The First Iteration Selection from a Subset of Radio Bearers Based on Received Parameters References 174
5. The Second Iteration Selection Based on Buffered Data References 178
6. The Radio Bearers are Associated with PDP Context References 182
7. The Receive Allocation on a Physical Shared Channel from a Scheduler in Network References 186

J. The ’670 Patent 191

1. The Master Information Block References 191
2. The Frequency and Time Resources References 194
3. The Control Information References 197
4. The Bandwidth Switching References 200
5. The PDSCH References 203

K. The ’889 Patent 205

1. The Control Message References 205
2. The Power Control Information References 209
3. The Second Time Slot References 212
4. The Code Sequence References 215
5. The Synchronization References 219

V. LIMITATIONS THAT ARE INDEFINITE OR LACK WRITTEN DESCRIPTION 222

A. Indefiniteness Under 35 U.S.C. § 112, ¶ 2 and 112(b) 222

1. The ’639 Patent 223
2. The ’805 Patent 223
3. The ’395 Patent 223

B. Enablement and Written Description under 35 U.S.C. § 112, ¶ 1 and 112(a) 223

1. The ’639 Patent 223
2. The ’743 Patent 224
3. The ’805 Patent 225
4. The ’180 Patent 226
5. The ’395 Patent 227
6. The ’158 Patent 227
7. The ’500 Patent 228
8. The ’416 Patent 229
9. The ’138 Patent 230
10. The ’153 Patent 231
11. The ’670 Patent 232
12. The ’889 Patent 233

VI. ACCOMPANYING DOCUMENT PRODUCTION 234

A. Additional Prior Art References 234

B. Technical Documents Sufficient to Show the Operation of the Accused Instrumentalities 234

I. INTRODUCTION

Pursuant to the Proposed Scheduling Order (Dkt. No. 25), Defendant Tesla, Inc. ("Tesla") hereby provides its Supplemental Preliminary Invalidity Contentions ("Invalidity Contentions") and supporting document production.

Plaintiff Intellectual Ventures II LLC, ("Intellectual Ventures") served its Preliminary Infringement Contentions on August 1, 2024 ("Infringement Contentions"). Tesla timely served its Preliminary Invalidity Contentions on October 24, 2024. Intellectual Ventures' Infringement Contentions assert that Tesla infringes the following patents and claims, and Tesla's corresponding invalidity contentions are as follows:

Asserted Patent	Infringement Contention Ex.	Asserted Claims	Invalidity Contention Exs.
6,894,639 (the "'639 Patent)	Ex. 10	1, 2, 3, 4, 5, 7	A1-A7
7,181,743 (the "'743 Patent)	Ex. 9	10, 11, 14, 16, 18	B1-B7
7,336,805 (the "'805 Patent)	Ex. 1	1, 6, 7, 8, 9, 10, 11	C1-C11
7,916,180 (the "'180 Patent)	Ex. 7	22, 28, 30	D1-D7
8,898,395 (the "'395 Patent)	Ex. 5	1, 2, 5	E1-E7
9,232,158 (the "'158 Patent)	Ex. 8	1, 8	F1-F8
9,706,500 (the "'500 Patent)	Ex. 2	11, 12, 13, 14, 16	G1-G15
10,136,416 (the "'416 Patent)	Ex. 6	1, 2, 4, 5, 6	H1-H9
10,292,138 (the "'138 Patent)	Ex. 3	1, 2, 3, 4, 5, 6	I1-I12
10,952,153 (the "'153 Patent)	Ex. 4	1, 2, 3, 4, 5	J1-J15
11,206,670 (the "'670 Patent)	Ex. 11	1, 2, 3, 4, 5	K1-K6
11,664,889 (the "'889 Patent)	Ex. 12	1, 2, 4	L1-L8

These patents are collectively referred to as the "Asserted Patents" and these claims are collectively referred to as the "Asserted Claims."

Intellectual Ventures' Infringement Contentions are vague and incomplete, fail to provide the specificity required, and fail to comply with the Court's guidance requiring plaintiffs to provide a "chart setting forth where in the accused product(s) each element of the asserted claim(s) are

found."[1] For example, claim 11 of the '805 Patent recites "[a] method for assisting guidance of a motor vehicle on the basis of image data." But Intellectual Ventures' Infringement Contentions do not identify any evidence and merely state, "On information and belief, the Tesla Automotive Vehicles perform the step of [insert claim element]." As another example, claim element 10(e) of the '743 Patent requires a "function which determines required allocation and reallocation actions needed to maintain a plurality of Quality of Service (QoS) requirements." Intellectual Ventures' Infringement Contentions, however, do not assert that this function exists within the accused product, nor do they identify where this element might be found. Moreover, Intellectual Ventures' Infringement Contentions include no conception and reduction to practice documents as required by the Court's OGPP and identify no priority date other than what is stated on the face of each Asserted Patent. As a result, Tesla has no indication as to how it allegedly practices such claims, how they are being construed, or what Intellectual Ventures contends to be the priority date.

II. RESERVATIONS

Consistent with the Court's Rules and Orders in this case, Tesla reserves the right to amend these Invalidity Contentions. The information and documents that Tesla produces are provisional and subject to further revision as follows.

To the extent the Invalidity Contentions reflect interpretations of claims consistent with, or implicit in, Intellectual Ventures' Infringement Contentions, no inference is intended nor should any be drawn that Tesla agrees with Intellectual Ventures' contentions or interpretations. Tesla's Invalidity Contentions should not be interpreted as suggesting that Intellectual Ventures' reading of the Asserted Patents is correct or as an admission that any Accused Instrumentality infringes the Asserted Claims. Tesla offers these Invalidity Contentions in response to Intellectual Ventures'

[1] Order Governing Patent Proceedings, version 4.4 (OGPP), § II.2.

Infringement Contentions without prejudice to any position Tesla may ultimately take as to the meaning of the Asserted Claims.

To the extent these Invalidity Contentions contain disclosures not specifically required by the Court's Scheduling Order, Tesla provides such disclosures merely by way of examples. Tesla reserves the right to make further disclosures, during discovery, in briefing, or at trial, as permitted by the Federal Rules of Civil Procedure, the Court's Scheduling Order, and other applicable Rules and Orders. Tesla reserves the right to modify these Invalidity Contentions in the event that Intellectual Ventures provides any information that it failed to provide in its Preliminary Infringement Contentions and accompanying document production, or attempts to revise or cure the deficiencies in its Preliminary Infringement Contentions.[2] Moreover, Tesla reserves the right to revise its Invalidity Contentions upon the Court's claim construction, any findings as to the priority or invention dates of the Asserted Patents, or any position that Intellectual Ventures or its expert witness(es) may take concerning claim construction, infringement, and invalidity issues.

Tesla's investigation into the validity of the Asserted Patents is ongoing and its Invalidity Contentions are based on its present knowledge. There may be products, services, or instrumentalities that were known or in public use prior to the filing dates of the application leading to the Asserted Patents, but Tesla must first obtain additional information regarding these products using available discovery tools once discovery commences. Tesla intends to conduct discovery regarding products, services, or instrumentalities offered by others in the industry. Tesla further intends to conduct discovery regarding the applicants' own products, if any, that existed prior to the time the applications leading to the Asserted Patents were filed, and any public uses or commercial offers made by the applicants or others prior to that time.

[2] *See, e.g.*, August 27, 2024, Letter from Colvin to Waldrop re Infringement Contentions.

Moreover, prior art not included in this disclosure may later become relevant. For example, Tesla is unaware to what extent Intellectual Ventures may contend that limitations of the Asserted Patents are not disclosed in the prior art identified by Tesla, or that any of the identified references do not qualify as prior art under 35 U.S.C. § 102. To the extent that such issues arise, Tesla reserves the right to identify additional teachings in the same references or in other references that anticipate or would have made the addition of the allegedly missing limitation to the design obvious. Further, the identification of any patents or patent applications as prior art shall be deemed to include identification of any foreign counterpart patents, parent patents, and patent applications.

III. INVALIDITY DUE TO ANTICIPATION

Tesla lists below the prior art currently known to it and which it contends invalidates, alone or in combination, the Asserted Claims of the Asserted Patents. Tesla reserves the right to rely on the earliest publication or priority dates to which each of the prior art references are entitled, including dates on which a claim of priority may be based for patent references that are any of a divisional, continuation, or continuation-in-part of an earlier filed patent application.

The patents, publications, and systems listed in this section each qualify as prior art under Pre-AIA 35 U.S.C. §§ 102(a), 102(b), 102(e), and/or 102(g), and AIA § 102(a). The attached Exhibits A1-A7 B1-B7, C1-C11, D1-D7, E1-E7, F1-F8, G1-G15, H1-H9, I1-I12, J1-J15, K1-K6, and L1-L8 each contain a claim chart for one of these prior art references or systems and identify where the relevant claim element is disclosed in and/or rendered obvious by the prior art.[3]

[3] The "Use / Knowledge / Offer Dates" relating to the "Known, Earlier Invented by Another, On Sale, In Use, and Other Prior Art" listed below are preliminary and subject to further discovery consistent with the Court's Scheduling Order. Tesla reserves all rights.

A. The ’639 Patent

1. Prior Art Patents and Patent Publications

Ex. No.	Patent/ Publication	Referenced As	Publication / Priority Date
A1	U.S. Pat. No. 5,027,413	Barnard	June 25, 1991
A6	U.S. Patent No. 4,881,270	Knecht	November 14, 1989
A7	WO 1990/016,038 A1	Lawrence	December 27, 1990

2. Prior Art Publications

Ex. No.	Patent/ Publication	Referenced As	Publication / Priority Date
A2	Matthew Turk & Alex Pentland, Eigenfaces for Recognition, 3(1) Journal of Cognitive Neuroscience 71-86 (1991)	Turk	January 1, 1991
A3	James S.J. Lee & Dziem D. Nguyen, *A Learning Network for Adaptive Target Tracking*, IEEE International Conference on Systems, Man, and Cybernetics Conference Proceedings 173-177 (November 4-7, 1990)	Lee	November 4, 1990
A4	Terence D. Sanger, *Optimal Unsupervised Learning in a Single-Layer Linear Feedforward Neural Network*, 2 Neural Networks 459-473 (1989)	Sanger	April 26, 1989
A5	Ren-Jean Liou et al., *Detection of Dim Targets In High Cluttered Background Using High Order Correlation Neural Network*, IEEE International Joint Conference on Neural Networks, Seattle, I-701-706 (July 8-14, 1991)	Liou	July 8, 1991

3. State of the Prior Art References

The following references, in addition to the references already identified above, provide background into the state of the art at the time of the alleged invention. Tesla reserves the right to rely on their disclosures in support of its contentions in Exhibits A1-A5 and Section IV, *infra*, that a particular claim limitation would have been obvious based on ordinary skill in the art and/or common knowledge.

Patent No. / Publication Title	Referenced As	Publication / Priority Date
Hidenori Inouchi et al., *A Real Time Simulated Human Vision System Using Connectionist Models Applied to Target Tracking*, IAPR Workshop on Machine Vision Applications, Tokyo, Japan, 303-306 (Nov. 28-30, 1990)	Inouchi	November 28, 1990
Kwang Kim, *Neural Target Tracking*, IEEE International Conference on Systems, Man, and Cybernetics, Charlottesville, VA, 1523-1528 (Oct. 13-16, 1991)	Kim	October 13, 1991
Liang Minet al., *Noisy Image Moving Point Target Recognition by Using Neural Network*, International Conference on Circuits and Systems, Shenzhen, China, 190-293 (June 16-17, 1991)	Min	June 16, 1991
P. Y. Mundkur &U. B. Desai, *Automatic Target Recognition Uusing Image and Network Decomposition*, IEEE International Joint Conference on Neural Networks, Singapore, 281-286 (Nov. 18-21, 1991)	Mundkur	November 18, 1991

B. The ’743 Patent

1. Prior Art Patents and Patent Publications

Ex. No.	Patent/ Publication	Referenced As	Publication / Priority Date
B4	U.S. Pat. No. 6,088,727	Hosokawa	October 17, 1997
B5	U.S. Pat. No. 6,985,937	Keshav	May 11, 2000
B6	U.S. Pat. App. No. 60/184,758	Peacock	February 23, 2000
B7	U.S. Pat. No. 6,269,396	Shah	December 11, 1998

2. Prior Art Publications

Ex. No.	Patent/ Publication	Referenced As	Publication / Priority Date
B1	Lonnie R. Welch, Binoy Ravindran, Behrooz A. Shirazi, and Carl Bruggeman, *Distributed, Scalable, Dependable Real-Time Systems: Middleware Services and Application*, The University of Texas at Arlington (April 1999)	Welch I	April 1999
B2	David R. Alexander, Douglas A. Lawrence, and Lonnie R. Welch, *Feedback Control Resources Management Using a* Posteriori *Worload Characterization, Ohio University*, Presented at	Alexander	June 4, 1999

Ex. No.	Patent/ Publication	Referenced As	Publication / Priority Date
	the 39th IEEE Conference on Decision and Control, December, 2000 (June 4, 1999)		
B3	Lonnie R. Welch, Binoy Ravindran, Paul V. Werme, *et al.*, *Specification and Modeling of Dynamic, Distributed Real-time Systems* (December 4, 1998)	Welch II	December 4, 1998

3. State of the Prior Art References

The following references, in addition to the references already identified above, provide background into the state of the art at the time of the alleged invention. Tesla reserves the right to rely on their disclosures in support of its contentions in Exhibits B1-B7 and Section IV, *infra*, that a particular claim limitation would have been obvious based on ordinary skill in the art and/or common knowledge.

Patent No. / Publication Title	Referenced As	Publication / Priority Date
U.S. Pat. No. 6,667,980	Modi	January 10, 2000
U.S. Pat. No. 5,655,081	Bonnell	March 8, 1995
U.S. Pat. No. 6,467,705	Kaler	June 3, 1999
U.S. Pat. No. 6,662,205	Bereiter	October 1, 1996
U.S. Pat. No. 5,958,009	Friedrich	February 27, 1997

C. The ’805 Patent

1. Prior Art Patents and Patent Publications

Ex. No.	Patent/ Publication	Referenced As	Publication / Priority Date
C4	U.S. Pat. App. Pub. No. 2003/0,191,568	Breed	October 9, 2003
C5	U.S. Pat. No. 5,434,927	Brady	July 18, 1995
C7	U.S. Pat. No. 6,453,056	Laumeyer	September 17, 2002

2. Prior Art Publications

Ex. No.	Patent/ Publication	Referenced As	Publication / Priority Date
C2	Alberto Broggi et al., *Visual Perception of Obstacles and Vehicles for Platooning*, 1(3) IEEE Transactions on Intelligent Transportation Systems 164–176 (September 2000)	Broggi	September 2000
C3	Daniel P. Huttenlocher & Shimon Ullman, *Object Recognition Using Alignment*, Image Understanding Workshop Sponsored by U.S. Defense Advanced Research Projects Agency, Los Angeles, 370-380 (Feb. 23-25, 1987)	Huttenlocher	February 23, 1987
C6	Reinhold Behringer & Nikolaus Muller, *Autonomous Road Vehicle Guidance from Autobahnen to Narrow Curves*, 14(5) IEEE Transactions on Robotics and Automation, 810-15 (October 1998)	Behringer	October 1998
C10	Thomas C. Henderson & Ernst Triendl, *Storing Feature Descriptions as 2-D Trees*, GE-24(2) IEEE Transactions on Geoscience and Remote Sensing 301-303 (March 1986)	Henderson	March 1986
C11	Alberto Broggi, Massimo Bertozzi, et al., AUTOMATIC VEHICLE GUIDANCE: THE EXPERIENCE OF THE ARGO AUTONOMOUS VEHICLE (1999)	Bertozzi	December 16, 1999

3. Known, Earlier Invented by Another, On Sale, In Use, and Other Prior Art

Ex. No.	System Name	Referenced As	Use / Knowledge / Offer Date
C1	SciAutonics AVIDOR-2004 Vehicle (No. 21) as from 2004 DARPA Grand Challenge in Barstow, CA	SciAutonics AVIDOR (DARPA)	March 13, 2004
	SciAutonics RASCAL Vehicle (No. 17) from 2004 DARPA Grand Challenge in Barstow, CA	SciAutonics RASCAL (DARPA)	March 13, 2004
C8	Virginia Tech, Optimus Vehicle from 2004 Intelligent Ground Vehicle Competition in Rochester, MI (dr95 at TESLAIV000022154)	Optimus (IGVC)	June 12-14, 2004
C9	Virginia Tech, Gemini Vehicle from 2004 Intelligent Ground Vehicle Competition in Rochester, MI (dr97 at TESLAIV000022184)	Gemini (IGVC)	June 12-14, 2004

Ex. No.	System Name	Referenced As	Use / Knowledge / Offer Date
See C2, C11	University of Parma Experimental Vehicle, ARGO (ARGO is described by at least Broggi, Bertozzi, and Bertozzi (GOLD))	ARGO	1999

4. State of the Prior Art References

The following references, in addition to the references already identified above, provide background into the state of the art at the time of the alleged invention. Tesla reserves the right to rely on their disclosures in support of its contentions in Exhibits C1-C7 and Section IV, *infra*, that a particular claim limitation would have been obvious based on ordinary skill in the art and/or common knowledge.

Patent No. / Publication Title / System Name	Referenced As	Publication / Priority Date
Reinhold Behringer, *The DARPA Grand Challenge - Autonomous Ground Vehicles in the Desert*, 5th IFAC/EURON Symposium on Intelligent Autonomous Vehicles, Lisboa, Portgual, 904-909 (July 5-7, 2004)	Behringer (DARPA Overview)	July 5, 2004
Carnegie Mellon Red Team "Sandstorm" Vehicle (No. 22) from 2004 DARPA Grand Challenge in Barstow, CA	Sandstorm (DARPA)	March 13, 2004
Digital Auto Drive "DAD" Vehicle (No. 7) from 2004 DARPA Grand Challenge in Barstow, CA	DAD (DARPA)	March 13, 2004
The Golem Group "Golem 1" Vehicle (No. 9) from 2004 DARPA Grand Challenge in Barstow, CA	Golem 1 (DARPA)	March 13, 2004
Caltech "BOB" Vehicle (No. 5) from 2004 DARPA Grand Challenge in Barstow, CA	BOB (DARPA)	March 13, 2004
TerraMax Oshkosh Vehicle (No. 20) from 2004 DARPA Grand Challenge in Barstow, CA	TerraMax (DARPA)	March 13, 2004
Team CIMAR "NAVIGATOR" Vehicle (No. 4) from 2004 DARPA Grand Challenge in Barstow, CA	NAVIGATOR (DARPA)	March 13, 2004
Team ENSCO "DAVID" Vehicle (No. 13) from 2004 DARPA Grand Challenge in Barstow, CA	DAVID (DARPA)	March 13, 2004
The Blue Team "Ghostrider" Vehicle (No. 16) from 2004 DARPA Grand Challenge in Barstow, CA	Ghostrider (DARPA)	March 13, 2004
Virginia Tech Vehicle (No. 25) from 2004 DARPA Grand Challenge in Barstow, CA	Vriginia Tech (DARPA)	March 13, 2004
Axion Racing Vehicle (No. 23) from 2004 DARPA Grand Challenge in Barstow, CA	Axion (DARPA)	March 13, 2004

Patent No. / Publication Title / System Name	Referenced As	Publication / Priority Date
Team CajunBot Vehicle (No. 2) from 2004 DARPA Grand Challenge in Barstow, CA	CajunBot (DARPA)	March 13, 2004
Team TerraHawk Vehicle (No. 15) from 2004 DARPA Grand Challenge in Barstow, CA	TerraHawk (DARPA)	March 13, 2004
Palos Verdes High School Road Warriors Vehicle (No. 10) from 2004 DARPA Grand Challenge in Barstow, CA	Palos Verdes (DARPA)	March 13, 2004
Jerry Lane et al, *Introduction: Intelligent ground vehicle competition (IGVC)*, 21(8) Journal of Robotic Systems 401-403 (July 7, 2004)	Lane	July 7, 2004
Ka. C. Cheok, *Gauging Intelligence of Unmanned Vehicle Systems–an IGVC Perspective*, 21(8) Journal of Robotic Systems 405-417 (July 7, 2004)	Cheok	July 7, 2004
Maurice Tedder et al., *An affordable modular mobile robotic platform with fuzzy logic control and evolutionary artificial neural networks*, 21(8) Journal of Robotic Systems 419-428 (July 7, 2004)	Tedder	July 7, 2004
R. David Hampton et al., *An Autonomous Tracked Vehicle with Omnidirectional Sensing*, 21(8) Journal of Robotic Systems 429-437 (July 7, 2004)	Hampton	July 7, 2004
Jeff Wit et al., *Autonomous Ground Vehicle Path Tracking*, 21(8) Journal of Robotic Systems 439-449 (July 7, 2004)	Wit	July 7, 2004
U.S. Pat. No. 6,819,779	Nichani	November 16, 2004
U.S. Pat. App. Pub. No. 2001/0,056,326	Kimura	December 27, 2001
U.S. Pat. No. 5,206,811	Itoh	April 27, 1993
Maurer et al., *A compact vision system for road vehicle guidance*, Conference Proceedings of 13th International Conference on Pattern Recognition, 313-317 (1996)	Maurer	September 1996
David M. Bevly, *Global Positioning System (GPS): A Low-Cost Velocity Sensor for Correcting Inertial Sensor Errors on Ground Vehicles*, 126(2) Journal of Dynamic Systems Measurement and Control 255-264 (June 2004)	Bevly	June 2004
Massimo Bertozzi et al., *GOLD: A Parallel Real-Time Stereo Vision System for Generic Obstacle and Lane Detection*, 7(1) IEE Transactions on Image Processing 62-81 (Jan. 1998)	Bertozzi (GOLD)	Jan. 1998
Ernst D. Dickmanns, *An Integrated Approach to Feature Based Dynamic Vision*, International Conference on Vision and Pattern Recognition (CVPR), Ann Arbor, MI, 820-825 (June 5-9, 1988)	Dickmanns	June 5-9, 1988

Patent No. / Publication Title / System Name	Referenced As	Publication / Priority Date
Takeo Kanade & William Whittaker, *Autonomous Land Vehicle Project at CMU*, International Conference on Scientific Computing, 71-80 (1986)	Kanade	1986
Martin R. Hall et al., *A Mission Planning Architecture for An Autonomous Vehicle*, International Conference on Industrial and Engineering Applications of Artificial Intelligence and Expert Systems, 582-589 (1988)	Hall	1988
Todd. M. Jochem, *Vision-Based Neural Network Road and Intersection Detection and Traversal*, IEEE/RSJ International Conference on Intelligent Robots and Systems. Human Robot Interaction and Cooperative Robots, Pittsburgh, PA, 344-348 (Aug. 5-9, 1995)	Jochem	August 5-9, 1995
Andrea Hub et al., Design and Development of an Indoor Navigation and Object Identification System for the Blind, Proceedings of the 6th International ACM SIGACCESS Conference on Computers and Accessibility, 147-152 (2003)	Hub	2003
Dean A. Pomerleau, Rapidly Adapting Artificial Neural Networks for Autonomous Navigation, Proceedings of the 3rd International Conference on Neural Information Processing Systems, 429-435 (Nov. 26, 1990)	Pomerleau	November 26, 1990
Jared Go et al., *Autonomous Behaviors for Interactive Vehicle Animations*, Eurographics/ACM SIGGRAPH Symposium on Computer Animation, 9-18 (2004)	Go	2004
Linnan Liu et al., *Application of Robust Sequential Edge Detection and Linking to Boundaries of Low Contrast Lesions in Medical Images*, IEEE Computer Society Conference on Computer Vision and Pattern Recognition, San Diego, CA, 582-587 (June 4-8, 1989)	Liu	June 4-8, 1989
Virginio Cantoni et al., *Recognizing 2D Objects by a Multi-Resolution Approach*, International Conference on Pattern Recognition, Computer Vision & Image Processing, Jerusalem, Israel, 310-316 (Oct. 9-13, 1994)	Cantoni	October 9-13, 1994
Theo Pavlidis & Yuh-Tay Liow, *Integration Region Growing and Edge Detectio*n, The Computer Society Conference on Computer Vision and Pattern Recognition, Ann Arbor, MI, 208-214 (June 5-9, 1988)	Pavlidis	June 5-9, 1988

Patent No. / Publication Title / System Name	Referenced As	Publication / Priority Date
S. Iverson et al., *An Experiment of Surface Recognition by Neural Trees*, Proceedings of Conference on Computer Architectures for Machine Perception, Como, Italy, 443-449 (Sept. 18-20, 1995)	Iverson	September 18-20, 1995
Zhenyu Wu & Richard Leahy, *An Optimal Graph Theoretic Approach to Data Clustering: Theory and Its Application to Image Segmentation*, 15(11) IEEE Transactions on Pattern Analsus and Machine Learning 1101-1113 (Nov. 1993)	Wu	November 1993
Karl Kluge, *Extracting Road Curvature and Orientation from Image Edge Points Without Perceptual Grouping into Features*, Proceedings of the Intelligent Vehicles '94 Symposium, Paris, France, 109-114 (Oct. 24-26, 1994)	Kluge	October 24-26, 1994
Xiaolin Wu & Chengfu Yao, *Image Coding by Adaptive Tree-Structured Segmentation*, Data Compression Conference Proceedings, Snowbird, Utah, 73-82 (Apr. 8-11, 1991)	Yao	April 8-11, 1991
Zhenyu Wu & Richard Leahy, *Image Segmentation via Edge Contour Finding: A Graph Theoretic Approach*, Proceedings 1992 IEEE Computer Society Conference on Computer Vision and Pattern Recognition, Champaign, Illinois, 613-619 (June 15-18, 1992)	Leahy	June 15-18, 1992
Jian Lu et al., *Noise Reduction with a Multiscale Edge Representation and Perceptual Criteria*, 1992 Proceedings of the IEEE-SP International Symposium on Time-Frequency and Time-Scale Analysis, Victoria, British Columbia, 555-558 (Oct. 4-6, 1992)	Lu	October 4-6, 1992
In Kyu Park et al., *Recognition and Reconstruction of 3-D Objects Using Model-based Perceptual Grouping*, 15th International Conference on Pattern Recognition, 720-724 (Sept. 3, 2000)	Park	September 3, 2000
Bluefield State Collect, Vasilius Vehicle from 2004 Intelligent Ground Vehicle Competition in Rochester, MI (dr71)	Vasilius	June 12-14, 2004
Cedarville University, Little Blue Vehicle from 2004 Intelligent Ground Vehicle Competition in Rochester, MI (dr72)	Little Blue	June 12-14, 2004
University of Quebec, CARPA Vehicle from 2004 Intelligent Ground Vehicle Competition in Rochester, MI (dr73)	CARPA	June 12-14, 2004

Patent No. / Publication Title / System Name	Referenced As	Publication / Priority Date
Elizabethtown College, WunderBot Vehicle from 2004 Intelligent Ground Vehicle Competition in Rochester, MI (dr74)	WunderBot	June 12-14, 2004
RoboJackets Vehicle from 2004 Intelligent Ground Vehicle Competition in Rochester, MI (dr75)	RoboJackets	June 12-14, 2004
Hosei University, AMIGO Vehicle from 2004 Intelligent Ground Vehicle Competition in Rochester, MI (dr76)	AMIGO	June 12-14, 2004
Lawrence Technical University, AISSIG Vehicle from 2004 Intelligent Ground Vehicle Competition in Rochester, MI (dr77)	AISSIG	June 12-14, 2004
Lawrence Technical University, Challenger Vehicle from 2004 Intelligent Ground Vehicle Competition in Rochester, MI (dr78)	Challenger	June 12-14, 2004
Lawrence Technical University, Deep Blue Vehicle from 2004 Intelligent Ground Vehicle Competition in Rochester, MI (dr79)	Deep Blue	June 12-14, 2004
Lawrence Technical University, Zenna Vehicle from 2004 Intelligent Ground Vehicle Competition in Rochester, MI (dr80)	Zenna	June 12-14, 2004
Michigan Tech, Unmanned Robotics Team Vehicle from 2004 Intelligent Ground Vehicle Competition in Rochester, MI (dr81)	Unmanned Robotics Team Vehicle	June 12-14, 2004
Oakland University, Proteus Vehicle from 2004 Intelligent Ground Vehicle Competition in Rochester, MI (dr82)	Proteus	June 12-14, 2004
Trinity College, ALVIN-V Vehicle from 2004 Intelligent Ground Vehicle Competition in Rochester, MI (dr83)	ALVIN-V	June 12-14, 2004
University of Alberta, Kodiak Vehicle from 2004 Intelligent Ground Vehicle Competition in Rochester, MI (dr84)	Kodiak	June 12-14, 2004
University of Central Florida, Black Knight Vehicle from 2004 Intelligent Ground Vehicle Competition in Rochester, MI (dr85)	Black Knight	June 12-14, 2004
University of Central Florida, RDB3K Vehicle from 2004 Intelligent Ground Vehicle Competition in Rochester, MI (dr86)	RDB3K	June 12-14, 2004
University of Cincinnati, Bearcat Cub Robot Vehicle from 2004 Intelligent Ground Vehicle Competition in Rochester, MI (dr87)	Bearcat Cub	June 12-14, 2004
University of Cincinnati, Bearcat Cub Robot from 2004 Intelligent Ground Vehicle Competition in Rochester, MI (dr88)	Bearcat III	June 12-14, 2004

Patent No. / Publication Title / System Name	Referenced As	Publication / Priority Date
University of Colorado at Denver, PUMA Vehicle from 2004 Intelligent Ground Vehicle Competition in Rochester, MI (dr89)	PUMA	June 12-14, 2004
University of Florida, TailGator Vehicle from 2004 Intelligent Ground Vehicle Competition in Rochester, MI (dr90)	TailGator	June 12-14, 2004
University of Michigan at Dearborn, UMD-AIM Vehicle from 2004 Intelligent Ground Vehicle Competition in Rochester, MI (dr91)	UMD-AIM	June 12-14, 2004
University of Wisconsin, Oliver Vehicle from 2004 Intelligent Ground Vehicle Competition in Rochester, MI (dr92)	Oliver	June 12-14, 2004
United States Military Academy, MAGIC Senior Vehicle from 2004 Intelligent Ground Vehicle Competition in Rochester, MI (dr93)	MAGIC Senior	June 12-14, 2004
United States Military Academy, MAGIC Junior Vehicle from 2004 Intelligent Ground Vehicle Competition in Rochester, MI (dr94)	MAGIC Junior	June 12-14, 2004
Virginia Tech, Johnny-5 Vehicle from 2004 Intelligent Ground Vehicle Competition in Rochester, MI (dr96)	Johnny-5	June 12-14, 2004
Paul J. Besl & Neil D. McKay, *A Method for Registration of 3-D Shapes*, 14(2) IEEE Trans. Pattern Analysis and Machine Intelligence 239–256 (Feb. 1992)	Besl	Feb. 1992

D. The ’180 Patent

1. Prior Art Patents and Patent Publications

Ex. No.	Patent/ Publication	Referenced As	Publication / Priority Date
D1	JP Pub. No. 2003-319231	Matsushima	November 3, 2003
D4	U.S. Pat. App. Pub. No. 2005/0,128,323	Choi	June 16, 2005
D5	U.S. Pat. No. 7,206,136	Labaziewicz	February 18, 2005
D6	U.S. Pat. No. 6,611,289	Yu	August 26, 2003

2. Prior Art Publications

Ex. No.	Patent/ Publication	Referenced As	Publication / Priority Date
D2	Bennett Wilburn et al., *High Performance Imaging Using Large Camera Arrays*, 24(3)	Wilburn Paper	July 1, 2005

Ex. No.	Patent/ Publication	Referenced As	Publication / Priority Date
	ACM Transactions on Graphics 765–776 (July 1, 2005)		
	Bennett Wilburn, *High Performance Imaging Using Arrays of Inexpensive Cameras*, PhD Dissertation Paper, Stanford University (Dec. 2004)	Wilburn Thesis	December 2004
D7	Reinhold Behringer & Nikolaus Muller, *Autonomous Road Vehicle Guidance from Autobahnen to Narrow Curves*, 14(5) IEEE Transactions on Robotics and Automation, 810-15 (October 1998)	Behringer	October 1998

3. Known, Earlier Invented by Another, On Sale, In Use, and Other Prior Art

Ex. No.	System Name	Referenced As	Use / Knowledge / Offer Date
D2	Stanford's Multi-Camera Array	Stanford Camera Array	2004
D3	Vexcel's UltraCam	UltraCam	May 2003

4. State of the Prior Art References

The following references, in addition to the references already identified above, provide background into the state of the art at the time of the alleged invention. Tesla reserves the right to rely on their disclosures in support of its contentions in Exhibits D1-D7 and Section IV, *infra*, that a particular claim limitation would have been obvious based on ordinary skill in the art and/or common knowledge.

Patent No. / Publication Title	Referenced As	Publication / Priority Date
Kodak Easy Share V570 Dual Lens Camera	Kodak Dual Lens Camera	January 4, 2005
U.S. Patent No. 5,920,657	Bender	July 6, 1999
Vishvjit S. Nalwa, *A True Omni-Directional Viewer*, Bell Laboratories Technical Memorandum, BL0115500-960115-01	Nawla	January 5, 1996
U.S. Pat. No. 6,700,711	Nawla 711	March 2, 2004

Patent No. / Publication Title	Referenced As	Publication / Priority Date
U.S. Pat. No. 5,990,934	Nawla 934	November 23, 1999
U.S. Pat. No. 7,365,780	Miyazaki	September 7, 2000
EP App. Pub. No. EP0858208	Weldy	August 12, 1998

E. The ’395 Patent

1. Prior Art Patents and Patent Publications

Ex. No.	Patent/ Publication	Referenced As	Publication / Priority Date
E1	U.S. Pat. No. 5,428,761	Herlihy	June 27, 1995
E2	U.S. Pat. App. Pub. No. 2006/0,085,588	Rajwar	September 30, 2004
E3	U.S. Pat. No. 7,089,374	Tremblay	January 23, 2004
E4	U.S. Pat. App. Pub. No. 2005/0,055,490	Widell	March 10, 2005
E6	U.S. Patent No. 7,206,903	Moir	July 20, 2004

2. Prior Art Publications

Ex. No.	Patent/ Publication	Referenced As	Publication / Priority Date
E5	Jayaram Bobba, Michelle Moravan, & Umair Saeed, *Token Coherence for Transactional Memory*, University of Wisconsin, Madison (Spring 2005)	Bobba	Spring 2005
E7	Jose F. Martinez, Joseph Torrellas, *Speculative Synchronization: Programma ility and Performance for Parallel Codes*, IEEE Computer Society (November-December 2003)	Martinez	November-December 2003

3. State of the Prior Art References

The following references, in addition to the references already identified above, provide background into the state of the art at the time of the alleged invention. Tesla reserves the right to rely on their disclosures in support of its contentions in Exhibits E1-E7 and Section IV, *infra*, that a particular claim limitation would have been obvious based on ordinary skill in the art and/or common knowledge.

Patent No. / Publication Title	Referenced As	Publication / Priority Date
U.S. Pat. No. 5,420,991	Konigsfeld	January 4, 1994
Sean Lie, *Hardware Support for Unbounded Transactional Memory*, Massachusetts Institute of Technology, 2004	Lie	2004
U.S. Pat. App. Pub. No. 2005/0,154,862	Yeh	November 30, 2001
U.S. Pat. App. Pub. No. 2004/0,064,653	Gharach	June 10, 2000
U.S. Pat. App. Pub. No. 2005/0,154,805	Steely	January 13, 2001
U.S. Pat. App. Pub. No. 2002/0,112,124	Arimilli	February 12, 2001
U.S. Pat. App. Pub. No. 2006/0,161,740	Kottopalli	December 29, 2004
U.S. Pat. App. Pub. No. 2006/0,053,258	Liu	September 8, 2004
U.S. Pat. App. Pub. No. 2006/0,224,834	O'Connor	March 30, 2005
U.S. Pat. No. 5,787,477	Rechtschaffen	June 18, 1996

F. The '158 Patent

1. Prior Art Patents and Patent Publications

Ex. No.	Patent/ Publication	Referenced As	Publication / Priority Date
F1	JP Pub. No. 2003-319231	Matsushima	November 3, 2003
F4	U.S. Pat. No. 5,023,725	McCutchen	June 11, 1991
F5	U.S. Pat. No. 5,144,442	Ginosar	September 1, 1992
F6	U.S. Pat. No. 6,611,289	Yu	August 26, 2003
F7	U.S. Pat. No. 6,665,010	Morris	December 16, 2003
F8	U.S. Pat. No. 7,365,780	Miyazaki	September 7, 2000

2. Prior Art Publications

Ex. No.	Patent/ Publication	Referenced As	Publication / Priority Date
F2	Bennett Wilburn et al., *High Performance Imaging Using Large Camera Arrays*, 24(3) ACM Transactions on Graphics 765–776 (July 1, 2005)	Wilburn Paper	July 1, 2005
	Bennett Wilburn, *High Performance Imaging Using Arrays of Inexpensive Cameras*, PhD Dissertation Paper, Stanford University (Dec. 2004)	Wilburn Thesis	December 2004

3. Known, Earlier Invented by Another, On Sale, In Use, and Other Prior Art

Ex. No.	System Name	Referenced As	Use / Knowledge / Offer Date
F2	Stanford Multi-Camera Array	Stanford Multi-Camera Array	2004
F3	Vexcel UltraCam	UltraCam	May 2003

4. State of the Prior Art References

The following references, in addition to the references already identified above, provide background into the state of the art at the time of the alleged invention. Tesla reserves the right to rely on their disclosures in support of its contentions in Exhibits F1-F8 and Section IV, *infra*, that a particular claim limitation would have been obvious based on ordinary skill in the art and/or common knowledge.

Patent No. / Publication Title	Referenced As	Publication / Priority Date
Kodak Easy Share V570 Dual Lens Camera	Kodak Dual Lens Camera	January 4, 2005
U.S. Pat. App. Pub. No. 2005/0,264,684	Kamon	May 26, 2005
U.S. Pat. No. 6,943,837	Booth	December 31, 1999
U.S. Pat. App. Pub. No. 2006/0,078,225	Pearson	May 13, 2005
U.S. Pat. No. 5,925,218	Smith	July 20, 1999
JP Pub. No. 2003-101886	Tsukioka	April 4, 2003
EP App. Pub. No. EP0858208	Weldy	August 12, 1998

G. The ’500 Patent

1. Prior Art Patents and Patent Publications

Ex. No.	Patent/ Publication	Referenced As	Publication / Priority Date
G1	G.B. Pat. App. No. 2,341,294 A	Chambers	March 8, 2000
G2	U.S. Pat. No. 6,308,080 B1	Burt	October 23, 2001
G3	U.S. Pat. App. Pub. No. 2004/0,190,485 A1	Khan	March 24, 2004
G4	U.S. Pat. No. 6,529,741 B1	Tong	March 4, 2003
G5	U.S. Pat. No. 6,600,772 B1	Zeira	July 29, 2003

G6	U.S. Pat. No. 6,334,047 B1	Andersson	April 9, 1999
G7	3GPP TS 25.221 v6.1.0	25.221 v6.1.0	June 2004
G8	3GPP TS 25.224 v6.1.0	25.224 v6.1.0	June 2004
G9	3GPP TS 25.331 v6.2.0	25.331 v6.2.0	June 2004
G10	U.S. Pat. No. 7,493,133 B2	Krishnan	February 5, 2004
G11	3GPP TS 25.896 v6.0.0	25.896 v6.0.0	March 2004
G12	U.S. Pat. App. Pub. No. 2004/0,077,370	Dick	April 22, 2004
G13	U.S. Pat. No. 8,194,618 B2	Iochi	April 28, 2004
G14	U.S. Pat. App. Pub. No. 2001/0,036,238 A1	Baker	November 1, 2001
G15	3GPP TSG RAN1 Meeting #30, R1-030067	R1-030067	January 2003

2. Known, Earlier Invented by Another, On Sale, In Use, and Other Prior Art

The functionalities claimed in the Asserted Claims of the ’500 Patent were disclosed in wireless standards that predate the ’500 Patent. Accordingly, any products implementing these wireless standards qualify as prior art to the ’500 Patent, and any citation to prior art references regarding any method or system should be construed to constitute not only a citation to the prior art reference but also as a reference to the system itself. Discovery has not yet commenced in this case. Tesla reserves the right to rely on such products or any other products that may become known and/or relevant subject to further discovery consistent with the Court’s Scheduling Order.

3. State of the Prior Art References

The following references, in addition to the references already identified above, provide background into the state of the art at the time of the alleged invention. Tesla reserves the right to rely on their disclosures in support of its contentions in Exhibits G1-G15 and Section IV, *infra*, that a particular claim limitation would have been obvious based on ordinary skill in the art and/or common knowledge.

Patent No. / Publication Title	Referenced As	Publication / Priority Date
EP Pat. No. 1,605,605 B1	Heo	June 9, 2005
KR Pat. App. No. 2004/062,190	Heo 190	August 6, 2004
U.S. Pat. No. 7,082,107 B1	Arvelo	July 25, 2006

Patent No. / Publication Title	Referenced As	Publication / Priority Date
U.S. Pat. App. Pub. No. 2002/0,115,461 A1	Shiraki	August 22, 2002
U.S. Pat. No. 7,437,175 B2	Lindoff	May 6, 2004
U.S. Pat. App. Pub. No. 2005/0,124,373 A1	Marinier	June 9, 2005
U.S. Pat. App. No. 60/523,973	Marinier 303 Prov	November 21, 2003
U.S. Pat. App. Pub. No. 2001/0,046,220 A1	Koo	November 29, 2001
KR Pat. App. No. 2003/0,037,398 A	Ho	May 14, 2003
U.S. Pat. App. Pub. No. 2002/0,093,922 A1	Grilli	July 18, 2002
U.S. Pat. App. Pub. No. 2002/0,196,766 A1	Hwang	December 26, 2002
U.S. Pat. No. 6,529,709 B1	Shen	March 4, 2003
U.S. Pat. No. 9,661,593 B2	Dick 593	October 17, 2002
U.S. Pat. App. Pub. No. 2003/0,119,452 A1	Kim	October 19, 2001
CN Pat. No. 100,454,799 C	Huawei	October 16, 2002
Objective Function Design for Video Stream call management in 3G Mobile Wireless Networks	Bhatti	April 23, 2003
cdma2000 High Rate Packet Data Air Interface Specification	cdma2000	October 25, 2002
3GPP TSG-RAN WG1 Meeting #28, R1-02-1219	R1-02-1219	October 2002
3GPP TSG RAN1 Meeting #30, R1-030067	R1-030067	January 2003
3GPP TSG-RAN WG1 Meeting #31, R1-03-0129	R1-03-0129	February 2002
3GPP TSG-RAN WG1 Meeting #31, R1-030177	R1-030177	February 2003
Harri Holma & Antti Toskala, WCDMA for UMTS: Radio Access for Third Generation Mobile Communications (2d ed. 2002)	Holma & Toskala	2002
Shin & Zeira et al., “Pathloss-Aided Closed Loop Transmit Power Control for 3G UTRA TDD,” IEEE (2003)	Shin & Zeira	2003
Andrew S. Tanenbaum, “Computer Networks,” 4th ed. (2002)	Tanenbaum	2002
Behrouz A. Forouzan, “Data Communications and Networking,” (3rd ed. 2003)	Forouzan	2003
Prabhakar Chitrapu, et al., “Wideband TDD: WCDMA for the Unpaired Spectrum,” (2004)	Chitrapu	2004
U.S. Pat. No. 7,519,390	Malone	2005
U.S. Pat. No. 6,351,460	Tiedemann	2002

H. The ’416 Patent

1. Prior Art Patents and Patent Publications

Ex. No.	Patent/ Publication	Referenced As	Publication / Priority Date
H1	U.S. Pat. No. 8,761,814	Kim 814	April 24, 2007
H2	U.S. Pat. No. 8,144,735	Vayanos	February 10, 2004
H3	U.S. Pat. App. Pub. No. 2010/0,234,032	Chun	March 28, 2006
H4	U.S. Pat. App. Pub. No. 2008/0,207,229	Cave	March 16, 2007
H5	U.S. Pat. No. 8,351,392	Ahn	August 14, 2007
H6	U.S. Pat. No. 8,027,297	Kim 297	June 13, 2007
H7	U.S. Pat. No. 9,717,073	Yamada	October 2, 2006
H8	U.S. Pat. No. 9,088,932	Lee	October 25, 2006

2. Prior Art Publications

Ex. No.	Patent/ Publication	Referenced As	Publication / Priority Date
H9	3GPP TS 25.211 v6.8.0	25.211 v6.8.0	September 26, 2007

3. Known, Earlier Invented by Another, On Sale, In Use, and Other Prior Art

The functionalities claimed in the Asserted Claims of the ’416 Patent were disclosed in wireless standards that predate the ’416 Patent. Accordingly, any products implementing these wireless standards qualify as prior art to the ’416 Patent, and any citation to prior art references regarding any method or system should be construed to constitute not only a citation to the prior art reference but also as a reference to the system itself. Discovery has not yet commenced in this case. Tesla reserves the right to rely on such products or any other products that may become known and/or relevant subject to further discovery consistent with the Court’s Scheduling Order.

4. State of the Prior Art References

The following references, in addition to the references already identified above, provide background into the state of the art at the time of the alleged invention. Tesla reserves the right to

rely on their disclosures in support of its contentions in Exhibits H1-H9 and Section IV, *infra*, that a particular claim limitation would have been obvious based on ordinary skill in the art and/or common knowledge.

Patent No. / Publication Title	Referenced As	Publication / Priority Date
US 2005-0,282,528 A1	Charpentier	June 18, 2004
US 2005-0,233,732 A1	Kwak	August 11, 2004
Radio Network Planning and Optimisation for UMTS	Laiho	2006
3GPP TSG RAN WG1 Meeting No. R1-051340	R1-051340	November 7, 2005
3GPP TSG RAN WG2 Meeting No. R2-071153	R2-071153	March 26, 2007
3GPP TS 25.331 RP-99649	RP-99649	October 1999
U.S. Pat. No. 7,606,226	Yi	June 22, 2002
PCT Pub. No. WO 2007/123,360	Kim 360	April 24, 2007
Harri Holma & Antti Toskala, WCDMA for UMTS: Radio Access for Third Generation Mobile Communications (3rd ed. 2004)	Holma	2004

I. The ’138 Patent

1. Prior Art Patents and Patent Publications

Ex. No.	Patent/ Publication	Referenced As	Publication / Priority Date
I1	U.S. Pat. No. 8,649,389 B2	Fox	March 30, 2007
I3	U.S. Pat. App. Pub. No. 2005/0,238,051 A1	Yi	October 27, 2005
I4	U.S. Pat. App. Pub. No. 2006/0,088,058 A1	Eckert	April 27, 2006
I5	U.S. Pat. App. Pub. No. 2007/0,297,435 A1	Bucknell	November 4, 2005
I6	WO 2005/125,252 A1	Löhr	December 29, 2005
I7	U.S. Pat. No. 10,779,288 B2	Gerkis	July 15, 2002
I8	U.S. Pat. No. 6,850,540	Peisa	February 1, 2005
I9	3GPP TS 25.321 V6.8.0	25.321 V6.8.0	March 2006
I10	3GPP RAN WG2 RAN2 Meeting #53, R2-061415	R2-061415	May 2006
I11	U.S. Pat. No. 7,245,636 B1	Hans	September 19, 2000
I12	U.S. Pat. App. Pub. No. 2008/0254804 A1	Lohr 804	February 7, 2006

2. Prior Art Publications

Ex. No.	Patent/ Publication	Referenced As	Publication / Priority Date
I2	Scheduling Algorithms in Broad-Band Wireless Networks	Cao	January 1, 2001

3. Known, Earlier Invented by Another, On Sale, In Use, and Other Prior Art

The functionalities claimed in the Asserted Claims of the ’138 Patent were disclosed in wireless standards that predate the ’138 Patent. Accordingly, any products implementing these wireless standards qualify as prior art to the ’138 Patent, and any citation to prior art references regarding any method or system should be construed to constitute not only a citation to the prior art reference but also as a reference to the system itself. Discovery has not yet commenced in this case. Tesla reserves the right to rely on such products or any other products that may become known and/or relevant subject to further discovery consistent with the Court’s Scheduling Order.

4. State of the Prior Art References

The following references, in addition to the references already identified above, provide background into the state of the art at the time of the alleged invention. Tesla reserves the right to rely on their disclosures in support of its contentions in Exhibits I1-I12 and Section IV, *infra*, that a particular claim limitation would have been obvious based on ordinary skill in the art and/or common knowledge.

Patent No. / Publication Title	Referenced As	Publication / Priority Date
G.B. Pat. App. No. 0606367.1 (PCT/GB2007/001 l 76)	Fox Provisional	March 30, 2007
C.A. Pat. No. 2,393,373 A1	Gerkis Provisional	July 15, 2002
U.S. Pat. No. 8,325,736 B2	Cohen	December 23, 2004
WO Pat. No. 2001/063,857 A1	Schultz	August 30, 2001
U.S. Pat. No. 7,212,535 B2	Shoham	March 31, 2006
U.S. Pat. App. Pub. No. 2007/0,268,831	Balazs	September 24, 2004

Patent No. / Publication Title	Referenced As	Publication / Priority Date
U.S. Pat. No. 7,822,048 B2	Buskirk	May 4, 2001
WO Pat. No. 2005/034,542 A1	Choi	April 14, 2005
KR Pat. No. 2003/0,037,398 A	Choi	November 3, 2001
U.S. Pat. App. Pub. No. 2003/0,076,799	Kwak	April 24, 2003
U.S. Pat. No. 7,839,892	Eckert892	September 29, 2005
U.S. Pat. No. 9,392,490 B2	Lacono	December 20, 2002
U.S. Pat. No. 9,998,943 B2	Terry	July 19, 2004
U.S. Pat. No. 8,089,988 B2	Chun	June 16, 2004
3GPP TSG-RAN WG2 Meeting #53, R2-061494	R2-061494	May 2006
3GPP TSG RAN2 Meeting #45, R2-050026	R2-050026	January 2005
3GPP TS 25.331 V6.9.0	25.331 V6.9.0	March 2006
U.S. Pat. App. Pub. No. 2003/0123485 A1	Yi 485	July 3, 2003

J. The ’153 Patent

1. Prior Art Patents and Patent Publications

Ex. No.	Patent/ Publication	Referenced As	Publication / Priority Date
J1	U.S. Pat. App. Pub. No. 2004/0,190,485 A1	Khan	March 24, 2004
J2	U.S. Pat. No. 6,334,047 B1	Andersson	April 9, 1999
J3	U.S. Pat. No. 6,600,772 B1	Zeira	July 29, 2003
J4	U.S. Pat. No. 6,529,741 B1	Tong	March 4, 2003
J5	U.S. Pat. No. 7,493,133 B2	Krishnan	February 5, 2004
J6	U.S. Pat. No. 6,308,080 B1	Burt	October 23, 2001
J7	G.B. Pat. App. No. 2,341,294 A	Chambers	March 8, 2000
J8	U.S. Pat. App. Pub. No. 2001/0,036,238	Baker	March 21, 2001
J9	3GPP TS 25.221 v6.1.0	25.221 v6.1.0	June 2004
J10	3GPP TS 25.224 v6.1.0	25.224 v6.1.0	June 2004
J11	3GPP TS 25.331 v6.2.0	25.331 v6.2.0	June 2004
J12	U.S. Pat. App. Pub. No. 2004/0,077,370	Dick	April 22, 2004
J13	U.S. Pat. No. 8,194,618 B2	Iochi	April 28, 2004
J14	3GPP TS 25.896 v6.0.0	25.896 v6.0.0	March 2004
J15	3GPP TSG RAN1 Meeting #30, R1-030067	R1-030067	January 2003

2. Known, Earlier Invented by Another, On Sale, In Use, and Other Prior Art

The functionalities claimed in the Asserted Claims of the ’153 Patent were disclosed in wireless standards that predate the ’153 Patent. Accordingly, any products implementing these wireless standards qualify as prior art to the ’153 Patent, and any citation to prior art references regarding any method or system should be construed to constitute not only a citation to the prior art reference but also as a reference to the system itself. Discovery has not yet commenced in this case. Tesla reserves the right to rely on such products or any other products that may become known and/or relevant subject to further discovery consistent with the Court’s Scheduling Order.

3. State of the Prior Art References

The following references, in addition to the references already identified above, provide background into the state of the art at the time of the alleged invention. Tesla reserves the right to rely on their disclosures in support of its contentions in Exhibits J1-J15 and Section IV, *infra*, that a particular claim limitation would have been obvious based on ordinary skill in the art and/or common knowledge.

Patent No. / Publication Title	Referenced As	Publication / Priority Date
EP Pat. No. 1,605,605 B1	Heo	June 9, 2005
KR Pat. No. 2004/062,190	Heo190	August 6, 2004
U.S. Pat. No. 7,082,107 B1	Arvelo	July 25, 2006
U.S. Pat. App. Pub. No. 2002/0,115,461 A1	Shiraki	August 22, 2002
U.S. Pat. No. 7,437,175 B2	Lindoff	May 6, 2004
U.S. Pat. App. Pub. No. 2005/0,124,373 A1	Marinier	June 9, 2005
U.S. Pat. App. No. 60/523,973	Marinier 303 Prov	November 21, 2003
U.S. Pat. App. Pub. No. 2001/0,046,220 A1	Koo	November 29, 2001
KR Pat. No. 2003/0,037,398 A	Ho	May 14, 2003
U.S. Pat. App. Pub. No. 2002/0,093,922 A1	Grilli	July 18, 2002
U.S. Pat. App. Pub. No. 2002/0,196,766 A1	Hwang	December 26, 2002
U.S. Pat. No. 6,529,709 B1	Shen	March 4, 2003
U.S. Pat. No. 9,661,593 B2	Dick 593	October 17, 2002

Patent No. / Publication Title	Referenced As	Publication / Priority Date
U.S. Pat. App. Pub. No. 2003/0,119,452 A1	Kim	October 19, 2001
CN Pat. No. 100,454,799 C	Huawei	October 16, 2002
3GPP TS 25.896 v6.0.0	25.896 v6.0.0	March 2004
Objective Function Design for Video Stream call management in 3G Mobile Wireless Networks	Bhatti	April 23, 2003
cdma2000 High Rate Packet Data Air Interface Specification	cdma2000	October 25, 2002
3GPP TSG-RAN WG1 Meeting #28, R1-02-1219	R1-02-1219	October 2002
3GPP TSG RAN1 Meeting #30, R1-030067	R1-030067	January 2003
3GPP TSG-RAN WG1 Meeting #31, R1-03-0129	R1-03-0129	February 2002
3GPP TSG-RAN WG1 Meeting #31, R1-030177	R1-030177	February 2003
Harri Holma & Antti Toskala, WCDMA for UMTS: Radio Access for Third Generation Mobile Communications (2d ed. 2002)	Holma & Toskala	2002
Shin & Zeira et al., "Pathloss-Aided Closed Loop Transmit Power Control for 3G UTRA TDD," IEEE (2003)	Shin & Zeira	2003
Andrew S. Tanenbaum, "Computer Networks," 4th ed. (2002)	Tanenbaum	2002
Behrouz A. Forouzan, "Data Communications and Networking," (3rd ed. 2003)	Forouzan	2003
Prabhakar Chitrapu, et al., "Wideband TDD: WCDMA for the Unpaired Spectrum," (2004)	Chitrapu	2004
U.S. Pat. No. 7,519,390	Malone	2005
U.S. Pat. No. 6,351,460	Tiedemann	2002

K. The '670 Patent

1. Prior Art Patents and Patent Publications

Ex. No.	Patent/ Publication	Referenced As	Publication / Priority Date
K1	U.S. Pat. App. Pub. No. 2011/0,269,475	Berggren	January 4, 2010
K2	U.S. Pat. App. Pub. No. 2012/0,327,895	Wallen	June 27, 2011

2. Prior Art Publications

Ex. No.	Patent/ Publication	Referenced As	Publication / Priority Date
K3	4G LTE LTE-Advanced for Mobile Broadband	Dahlman	March 21, 2011
K4	LTE E-UTRAN and its Access Side Protocols	Tripathi	September 9, 2011
K5	3GPP TSG RAN WG1 Meeting #67, R1-113659	R1-113659	November 14, 2011
K6	3GPP TSG RAN WG1 Meeting #67, R1-114188	R1-114188	November 14, 2011

3. Known, Earlier Invented by Another, On Sale, In Use, and Other Prior Art

The functionalities claimed in the Asserted Claims of the ’670 Patent were disclosed in wireless standards that predate the ’670 Patent. Accordingly, any products implementing these wireless standards qualify as prior art to the ’670 Patent, and any citation to prior art references regarding any method or system should be construed to constitute not only a citation to the prior art reference but also as a reference to the system itself. Discovery has not yet commenced in this case. Tesla reserves the right to rely on such products or any other products that may become known and/or relevant subject to further discovery consistent with the Court’s Scheduling Order.

4. State of the Prior Art References

The following references, in addition to the references already identified above, provide background into the state of the art at the time of the alleged invention. Tesla reserves the right to rely on their disclosures in support of its contentions in Exhibits K1-K6 and Section IV, *infra*, that a particular claim limitation would have been obvious based on ordinary skill in the art and/or common knowledge.

Patent No. / Publication Title	Referenced As	Publication / Priority Date
WO Pat. No. 2010/052,843 A1	Miho	October 26, 2009

Patent No. / Publication Title	Referenced As	Publication / Priority Date
3GPP TSG-RAN Working Group 3, Meeting No. #7	TSGW3#7(99)B63	September 20, 1999
3GPP TS 36.213 V10.4.0	36.213 V10.4.0	January 2012
3GPP TS 36.300 V11.0.0	36.300 V11.0.0	December 2011
3GPP TS 36.331 V10.4.0	36.331 V10.4.0	January 2012
3GPP TSG RAN WG1 Meeting #67, R1-114267	R1-114267	November 14, 2011
WO Pat. No. 2010/117,240 A2	Noh	April 9, 2010
WO Pat. No. 2012-084,001 A1	Sagfors	December 20, 2010
U.S. Pat. App. Pub. No. 2012/0,327,894	Axmon	June 27, 2011
U.S. Pat. App. Pub. No. 2013/0,083,749	Xu	September 30, 2011

L. The ’889 Patent

1. Prior Art Patents and Patent Publications

Ex. No.	Patent/ Publication	Referenced As	Publication / Priority Date
L1	U.S. Pat. No. 8,072,916	Dateki	January 14, 2005
L2	U.S. Pat. App. Pub. No. 2004/0,087,325	Cheng	November 4, 2002
L3	U.S. Pat. App. Pub. No. 2005/0,208,959	Chen	July 12, 2004
L4	U.S. Pat. App. Pub. No. 2003/0,026,219	Moon	March 23, 1999
L5	U.S. Pat. No. 8,285,319	Shin	October 27, 2006

2. Prior Art Publications

Ex. No.	Patent/ Publication	Referenced As	Publication / Priority Date
L6	3GPP TS 36.212 v8.0.0	36.212 v8.0.0	September 2007
L7	3GPP TS 36.213 v8.0.0	36.213 v8.0.0	September 2007
L8	Wideband TDD: WCDMA for the Unpaired Spectrum	Chitrapu	2004

3. Known, Earlier Invented by Another, On Sale, In Use, and Other Prior Art

The functionalities claimed in the Asserted Claims of the ’889 Patent were disclosed in wireless standards that predate the ’889 Patent. Accordingly, any products implementing these

wireless standards qualify as prior art to the ’889 Patent, and any citation to prior art references regarding any method or system should be construed to constitute not only a citation to the prior art reference but also as a reference to the system itself. Discovery has not yet commenced in this case. Tesla reserves the right to rely on such products or any other products that may become known and/or relevant subject to further discovery consistent with the Court’s Scheduling Order.

4. State of the Prior Art References

The following references, in addition to the references already identified above, provide background into the state of the art at the time of the alleged invention. Tesla reserves the right to rely on their disclosures in support of its contentions in Exhibits L1-L8 and Section IV, *infra*, that a particular claim limitation would have been obvious based on ordinary skill in the art and/or common knowledge.

Patent No. / Publication Title	Referenced As	Publication / Priority Date
WO Pat. No. 2002/082,666 A2	Malkamaki	March 28, 2001
KR Pat. No. 2001/0,111,096 A	Lee	June 6, 2007
U.S. Pat. App. Pub. No. 2003/0,189,918	Das	April 5, 2002
U.S. Pat. App. Pub. No. 2005/0,075,124	Willeneggar	May 6, 2002
U.S. Pat. App. Pub. No. 2002/0,141,331	Mate	February 16, 2001
Computer Networks, Fourth Edition	Tanenbaum	August 9, 2002
Data Communications and Networking, Third Edition	Forouzan	July 14, 2003
U.S. Pat. No. 7,821,913	Malladi	March 29, 2005
TSG-RAN Working Group1 meeting #34, R1-031073	R1-031073	October 6, 2003
U.S. Pat. App. Pub. No. 2006-0,141,933	Smee	November 18, 2003
U.S. Pat. App. Pub. No. 2006-0,025,158	LeBlanc	September 9, 1996
U.S. Pat. App. Pub. No. 2005-0,105,487	Rudolf	July 29, 2004
3GPP Standard TS 25.899 v. 6.0.0	25.899 v. 6.0.0	June 2004
U.S. Pat. No. 7,493,133	Krishnan	August 11, 2005
U.S. Pat. App. Pub. No. 2003/0,219,037	Toskala	May 24, 2002
U.S. Pat. App. Pub. No. 2005/0,152,265	Denk	December 16, 2004
U.S. Pat. App. Pub. No. 2005/0,265,279	Markovic	April 22, 2004

IV. INVALIDITY DUE TO OBVIOUSNESS

Subject to the reservation of rights above and based upon Intellectual Ventures' Complaint, Infringement Contentions, purported claim constructions, and its application of the claims to the Accused Instrumentalities, the references charted and/or identified in these Invalidity Contentions, including the prior art identified in Section III, *supra*, at least render obvious all of the Asserted Claims of the Asserted Patents in view of the teachings of these references and/or the knowledge of a person of ordinary skill in the art ("POSITA"), as disclosed in the prior art charted in Exhibits A1-A7, B1-B7, C1-C12, D1-D7, E1-E7, F1-F8, G1-G15, H1-H9, I1-I12, J1-J15, K1-K6, and L1-L8.

To the extent a finder of fact finds that a limitation of a given claim was not disclosed by one of the references charted in these Invalidity Contentions, such claim(s) are nevertheless unpatentable as obvious because the Asserted Claims contain nothing more than simple and obvious substitution of one known element for another or the mere obvious application of a known technique to a piece of prior art ready for the improvement. To the extent not anticipated, no Asserted Claim goes beyond combining known elements to achieve predictable results or does more than choose between clear alternatives known to those of skill in the art. Motivation to Combine

In *KSR International Co. v. Teleflex, Inc*., the United States Supreme Court held that, among other things, "[t]he combination of familiar elements according to known methods is likely to be obvious when it does no more than yield predictable results." 127 S. Ct. 1727, 1731, 1739 (2007) ("[A] court must ask whether the improvement is more than the predictable use of prior art elements according to their established functions."). In particular, a patent claim is obvious where "the content of the prior art, the scope of the patent claim, and the level of ordinary skill are not in material dispute, and the obviousness of the claim is apparent in light of these factors." *Id*. at 1745-

46. The Supreme Court held that "if a technique has been used to improve one device, and a person of ordinary skill in the art would recognize that it would improve similar devices in the same way, using the technique is obvious unless its actual application is beyond his or her skill." *Id*. at 1731.

Moreover, the Court recognizes that market pressures will motivate a person of ordinary skill in the art ("POSITA") to survey known art for solutions to problems. *Id*. at 1732 ("When there is a design need or market pressure to solve a problem and there are a finite number of identified, predictable solutions, a person of ordinary skill in the art has good reason to pursue the known options within his or her technical grasp."). When a POSITA uses an identified, predictable solution to solve a problem, "it is likely the product not of innovation but of ordinary skill and common sense." *Id*.

In addition, when a work is available in one field of endeavor, design incentives and other market forces can prompt variations of it, either in the same field or a different one. *Id*. at 1740. If a POSITA can implement a predictable variation, 35 U.S.C. § 103 bars its patentability. *Id*. The rationale to combine or modify prior art references is significantly stronger when references seek to solve similar problems, come from the same field, and correspond well. *In re Inland Steel Co.*, 265 F.3d 1354, 1362 (Fed. Cir. 2001).

Motivations to combine, as well as the general state of the art, may be found in a variety of places including the prior art defined or described above and/or in the accompanying charts, and the specifications of the Asserted Patents. For example, each item, knowledge, prior invention, or action of prior art generally relates to methods and/or systems for implementing or improving selective video feed monitoring or facilitating third party elevator integration. Many of the prior art references likewise have overlapping prior art authors, contributors, or prior inventors, as well as overlapping assignees, industries, and companies and individuals involved in developing

industry standards, products, services, systems, etc. A POSITA at the time of the alleged inventions would have been motivated to combine any one item, knowledge, prior invention, or action of identified prior art with any other identified item, knowledge, prior invention, or action of prior art. For at least this reason, it would have been obvious to a person of skill in the art at the time of the alleged inventions of the Asserted Claims to combine the various prior art cited herein so as to practice or include every element of the Asserted Claims, and there is a motivation in the art to make such a combination.

Motivations to combine various prior art are present in the items, knowledge, prior inventions, actions, and references themselves, the common knowledge of one of ordinary skill in the art, the prior art as a whole, or the nature of the problems allegedly addressed by the Asserted Patents. Further reasons to combine the prior art identified in these charts include the nature of the problem being solved, the express, implied and inherent teachings of the prior art, the knowledge of persons of ordinary skill in the art, the fact that the prior art is generally directed towards methods and/or systems for implementing or improving motion detection or elevator access control, that such combinations would have yielded predictable results, and that such combinations would have represented known alternatives to a POSITA.

To the extent not anticipated, the Asserted Claims represent no more than the result of ordinary innovation over the prior art. Moreover, no showing of a specific motivation to combine prior art is required to combine the prior art disclosed above and in the attached charts, as each combination of art would have no unexpected results, and at most would simply represent a known alternative to one of skill in the art. *See KSR*, 127 S. Ct. at 1739-40 (rejecting the Federal Circuit's "rigid" application of the teaching, suggestion, or motivation to combine test, instead espousing an "expansive and flexible" approach). Indeed, the Supreme Court held that a POSITA is "a person

of ordinary creativity, not an automaton" and "in many cases a person of ordinary skill will be able to fit the teachings of multiple patents together like pieces of a puzzle." *Id*. at 1742. Nevertheless, in addition to the information contained in the section immediately above and elsewhere in these contentions, additional motivations and reasons to combine the cited art are identified. A person having ordinary skill in any or all of these fields would be aware of all prior art in those fields, including but not limited to the identified prior art, and would have been motivated to combine the teachings and knowledge of prior art with the field.

Although the law does not require evidence of motivation to combine, motivation exists to combine one or more of the references disclosed herein with each other. Beyond specific motivations identified herein, motivation to modify a particular reference or to combine any two or more of the identified references comes from (a) the nature of the problem being solved; (b) the teachings of the prior art; (c) the knowledge of persons of ordinary skill in the art; (d) the fact that all of the references teach systems, apparatuses, and methods related to the subject matter and address the same technical issues described in the Asserted Patents; and (e) one would be motivated by considerations of efficiency, effectiveness, convenience, cost-savings, and accessibility, to combine the various teachings. Additionally, one would be motivated to address the alleged problems or achieve the purported objectives identified in the Background sections of the Asserted Patents.

A. The '639 Patent

NAME	DESCRIPTION:					
	The Generating References	The Extracting References	The Using References	The Outputting References	The Parallel References	The Target Classes References
Barnard			✓			
Turk	✓	✓	✓	✓	✓	✓
Lee			✓	✓	✓	✓
Sanger				✓	✓	✓

NAME	DESCRIPTION:					
	The Generating References	The Extracting References	The Using References	The Outputting References	The Parallel References	The Target Classes References
Liou	✓	✓	✓	✓	✓	
Knecht				✓		✓
Lawrence					✓	

1. The Generating References

The Generating References are: Turk and Liou. The relevant claims and/or claim elements of the Generating References are identified below:

Patent	Claim	Claim Language
’639	1[c]	“generating said target feature information from said data statistics”

To the extent Intellectual Ventures contends that an anticipatory reference in Exhibits A1-A7 fails to disclose these claims and/or claim elements, such reference can be combined with the corresponding disclosures from any one or more of the Generating References to render it obvious under 35 U.S.C. § 103(a), at least based on Intellectual Ventures’ Infringement Contentions, apparent claim constructions, and application of the claims to the Accused Instrumentalities, as best as they can be deciphered.

One of ordinary skill in the art would have been motivated to combine any one or more of the references provided in Exhibits A1-A7 with any one or more of the above exemplary Generating References to improve the function and utility of the same, and such a combination would have been within that person’s skill. For example, each of the Generating References describe a way to determine “target feature information” from the calculated data statistics:

- Turk, 73 (“2. Calculate the eigenfaces from the training set, keeping only the M images that correspond to the highest eigenvalues. These M images define the face space. As new faces are experienced, the eigenfaces can be updated or recalculated. 3. Calculate the corresponding distribution in M-dimensional weight space for each known individual, by projecting their face images onto the ‘face space.’”).

- Liou, I-705 ("At each step of the process of evaluating the high order correlations, we use a threshold to determine a possible target window. If the correlations in a window are higher than the chosen threshold then their high order correlation was computed recursively, otherwise the window is considered to be a non-target window and we stop the process for this window.").

And each of the remaining references provided in Exhibits A1-A7 involve analyzing collected data to distinguish targets from non-targets and/or classify detected objects:

- Barnard, Abstract ("A target detection system is provided for examining picture signals of a scene which may contain a target signal (15,16) to be detected against background signals (17,18).").

- Lee, [173] ("We developed a real-time adaptive scheme to detect and track moving objects under noisy, dynamic conditions including moving sensors [1]. This approach integrates the adaptiveness and incremental learning characteristics of neural learning networks with intelligent reasoning and process control [2]. Neural network algorithms constitute the basic computational structure for classification [3][4].").

- Sanger, 460 ("We have developed an algorithm to train neural networks to find the eigenvectors of the autocorrelation matrix of the input distribution, given only samples from that distribution (Sanger, 1988). Each output of a trained network represents the response to one eigenvector, and the outputs are ordered by decreasing eigenvalue.").

- Knecht, Abstract ("A method and system for classifying a raster scanned target image by collapsing the image into a vector corresponding to a horizontal line of the image, mathematically transforming this vector into a feature vector which corresponds to the power spectrum of the collapsed image, and comparing the feature vector with stored decision rules corresponding to classes of possible target objects to determine if the image represents an object in one of the classes.").

- Lawrence, 45:15–25 ("By way of example, the mechanism by which the PA can accomplish automatic target recognition and parameter estimation is described, and how to train and operate a system. The training procedure and the result thereof is first described, which for this system is the equivalent of defining the feature set and building the feature detectors for a model based vision scheme.").

Combining the prior art identified in Exhibits A1-A7 with any one of the above exemplary Generating References would have amounted to applying a known technique to a known device ready for improvement to yield predictable results. Furthermore, the prior art and exemplary Generating References are in the same field of endeavor (*e.g.*, methods and systems for pattern recognition, feature extraction, or target detection) and given the design needs (*e.g.*, improving

techniques for distinguishing between features/targets and background), combined with a finite number of identified, predictable solutions (*e.g.*, expanding beyond existing pattern recognition methods), a POSITA would have been motivated to combine the teachings of these references.

Alternatively, each of the references provided in Exhibits A1-A7 alone renders this element obvious, in view of the knowledge and skill of a POSITA. That is, it would have been obvious in the view of one of ordinary skill in the art to add the above limitations to any one or more of the references provided in Exhibits A1-A7. A POSITA would have been motivated to incorporate calculating feature information from data statistics into existing pattern recognition methods, and such a combination would have been within that person's skill. As demonstrated in the exemplary Generating References listed above, calculating feature information from data statistics using a training model, such as a neural network, was well-known in the art by the time of the Asserted Patent's claimed invention and thus, adding it to any one or more of the references provided in Exhibits A1-A7 would have amounted to applying a known technique to a known device ready for improvement to yield predictable results.

2. The Extracting References

The Extracting References are: Turk and Liou. The relevant claims and/or claim elements of the Extracting References are identified below:

Patent	Claim	Claim Language
'639	1[d]	"extracting said target specific feature information from said data"

To the extent Intellectual Ventures contends that an anticipatory reference in Exhibits A1-A7 fails to disclose these claims and/or claim elements, such reference can be combined with the corresponding disclosures from any one or more of the Extracting References to render it obvious under 35 U.S.C. § 103(a), at least based on Intellectual Ventures' Infringement Contentions,

apparent claim constructions, and application of the claims to the Accused Instrumentalities, as best as they can be deciphered.

One of ordinary skill in the art would have been motivated to combine any one or more of the references provided in Exhibits A1-A7 with any one or more of the above exemplary Extracting References to improve the function and utility of the same, and such a combination would have been within that person's skill. For example, each of the Extracting References describe extracting the relevant features from the collected data:

- Turk, 73 ("In the language of information theory, we want to extract the relevant information in a face image, encode it as efficiently as possible, and compare one face encoding with a database of models encoded similarly. A simple approach to extracting the information contained in an image of a face is to somehow capture the variation in a collection of face images, independent of any judgment of features, and use this information to encode and compare individual face images").

- Liou, I-704 ("The processing element at the decision layer also performs the hard limiter function. To determine whether or not a window contains a possible target track, the results (l or 0) from the TDL are added for the entire time sequence and then compared with the threshold. The threshold can be adjusted to accommodate the inconsistent correlations caused by missing target points.").

And each of the remaining references provided in Exhibits A1-A7 involve analyzing collected data to distinguish targets from non-targets and/or classify detected objects:

- Barnard, Abstract ("A target detection system is provided for examining picture signals of a scene which may contain a target signal (15,16) to be detected against background signals (17,18).").

- Lee, [173] ("We developed a real-time adaptive scheme to detect and track moving objects under noisy, dynamic conditions including moving sensors [1]. This approach integrates the adaptiveness and incremental learning characteristics of neural learning networks with intelligent reasoning and process control [2]. Neural network algorithms constitute the basic computational structure for classification [3][4].").

- Sanger, 460 ("We have developed an algorithm to train neural networks to find the eigenvectors of the autocorrelation matrix of the input distribution, given only samples from that distribution (Sanger, 1988). Each output of a trained network represents the response to one eigenvector, and the outputs are ordered by decreasing eigenvalue.").

- Knecht, Abstract ("A method and system for classifying a raster scanned target image by collapsing the image into a vector corresponding to a horizontal line of the image, mathematically transforming this vector into a feature vector which corresponds to the power spectrum of the collapsed image, and comparing the feature vector with stored decision rules corresponding to classes of possible target objects to determine if the image represents an object in one of the classes.").

- Lawrence, 45:15–25 ("By way of example, the mechanism by which the PA can accomplish automatic target recognition and parameter estimation is described, and how to train and operate a system. The training procedure and the result thereof is first described, which for this system is the equivalent of defining the feature set and building the feature detectors for a model based vision scheme.").

Combining the prior art identified in Exhibits A1-A7 with any one of the above exemplary Extracting References would have amounted to applying a known technique to a known device ready for improvement to yield predictable results. Furthermore, the prior art and exemplary Extracting References are in the same field of endeavor (*e.g.*, methods and systems for pattern recognition, feature extraction, or target detection) and given the design needs (*e.g.*, improving techniques for distinguishing between features/targets and background), combined with a finite number of identified, predictable solutions (*e.g.*, expanding beyond existing pattern recognition methods), a POSITA would have been motivated to combine the teachings of these references.

Alternatively, each of the references provided in Exhibits A1-A7 alone renders this element obvious, in view of the knowledge and skill of a POSITA. That is, it would have been obvious in the view of one of ordinary skill in the art to add the above limitations to any one or more of the references provided in Exhibits A1-A7. A POSITA would have been motivated to incorporate extracting feature information from inputted data into existing pattern recognition methods, and such a combination would have been within that person's skill. As demonstrated in the exemplary Extracting References listed above, extracting feature information from inputted data for target detection was well-known in the art by the time of the Asserted Patent's claimed invention and thus, adding it to any one or more of the references provided in Exhibits A1-A7 would have

amounted to applying a known technique to a known device ready for improvement to yield predictable results.

3. The Using References

The Using References are: Barnard, Lee, Turk, and Liou. The relevant claims and/or claim elements of the Using References are identified below:

Patent	Claim	Claim Language
’639	1[d]	“using said target specific feature information to distinguish specific targets from background clutter”

To the extent Intellectual Ventures contends that an anticipatory reference in Exhibits A1-A7 fails to disclose these claims and/or claim elements, such reference can be combined with the corresponding disclosures from any one or more of the Using References to render it obvious under 35 U.S.C. § 103(a), at least based on Intellectual Ventures’ Infringement Contentions, apparent claim constructions, and application of the claims to the Accused Instrumentalities, as best as they can be deciphered.

One of ordinary skill in the art would have been motivated to combine any one or more of the references provided in Exhibits A1-A7 with any one or more of the above exemplary Using References to improve the function and utility of the same, and such a combination would have been within that person’s skill. For example, each of the Using References describe using derived feature information to distinguish targets from non-targets:

- Barnard, Abstract (“The statistical distributions of the background and target features in each sub-store to set a target decision threshold, in feature terms, for each sub-image are calculated. The feature values of an incoming picture signal in a sub-image are compared with the decision threshold in the associated sub-store to provide a target detection signal.”).
- Lee, [175] (“In the classification phase, each first layer neuron performs a classification of the input feature vector (into T or C classes) and the output neuron performs an 'AND' on the T class, thus, its output is T if and only if all the inputs are T and is C otherwise”).

- Turk, 73 ("Having initialized the system, the following steps are then used to recognize new face images: 1. Calculate a set of weights based on the input image and the M eigenfaces by projecting the input image onto each of the eigenfaces. 2. Determine if the image is a face at all (whether known or unknown) by checking to see if the image is sufficiently close to 'face space.' 3. If it is a face, classify the weight pattern as either a known person or as unknown.").

- Liou, I-705 ("If the correlations in a window are higher than the chosen threshold then their high order correlation was computed recursively, otherwise the window is considered to be a non-target window and we stop the process for this window. Usually the non-target windows can be distinguished after the second order correlations are performed. The threshold was chosen to be -2. This choice of threshold takes into account up to 2 missing points in 10 scans").

And each of the remaining references provided in Exhibits A1-A7 involve analyzing collected data to distinguish targets from non-targets and/or classify detected objects:

- Sanger, 460 ("We have developed an algorithm to train neural networks to find the eigenvectors of the autocorrelation matrix of the input distribution, given only samples from that distribution (Sanger, 1988). Each output of a trained network represents the response to one eigenvector, and the outputs are ordered by decreasing eigenvalue.").

- Knecht, Abstract ("A method and system for classifying a raster scanned target image by collapsing the image into a vector corresponding to a horizontal line of the image, mathematically transforming this vector into a feature vector which corresponds to the power spectrum of the collapsed image, and comparing the feature vector with stored decision rules corresponding to classes of possible target objects to determine if the image represents an object in one of the classes.").

- Lawrence, 45:15–25 ("By way of example, the mechanism by which the PA can accomplish automatic target recognition and parameter estimation is described, and how to train and operate a system. The training procedure and the result thereof is first described, which for this system is the equivalent of defining the feature set and building the feature detectors for a model based vision scheme.").

Combining the prior art identified in Exhibits A1-A7 with any one of the above exemplary Using References would have amounted to applying a known technique to a known device ready for improvement to yield predictable results. Furthermore, the prior art and exemplary Using References are in the same field of endeavor (*e.g.*, methods and systems for pattern recognition, feature extraction, or target detection) and given the design needs (*e.g.*, improving techniques for distinguishing between features/targets and background), combined with a finite number of

identified, predictable solutions (*e.g.*, expanding beyond existing pattern recognition methods), a POSITA would have been motivated to combine the teachings of these references.

Alternatively, each of the references provided in Exhibits A1-A7 alone renders this element obvious, in view of the knowledge and skill of a POSITA. That is, it would have been obvious in the view of one of ordinary skill in the art to add the above limitations to any one or more of the references provided in Exhibits A1-A7. A POSITA would have been motivated to incorporate using feature information from a training step to identify targets in inputted data into existing pattern recognition methods, and such a combination would have been within that person's skill. As demonstrated in the exemplary Using References listed above, using feature information from a training model, such as a neural network, to identify targets was well-known in the art by the time of the Asserted Patent's claimed invention and thus, adding it to any one or more of the references provided in Exhibits A1-A7 would have amounted to applying a known technique to a known device ready for improvement to yield predictable results.

4. The Outputting References

The Outputting References are: Lee, Turk, Sanger, Liou, and Knecht. The relevant claims and/or claim elements of the Outputting References are identified below:

Patent	Claim	Claim Language
'639	1[b]	"outputting target and background clutter information"

To the extent Intellectual Ventures contends that an anticipatory reference in Exhibits A1-A7 fails to disclose these claims and/or claim elements, such reference can be combined with the corresponding disclosures from any one or more of the Outputting References to render it obvious under 35 U.S.C. § 103(a), at least based on Intellectual Ventures' Infringement Contentions, apparent claim constructions, and application of the claims to the Accused Instrumentalities, as best as they can be deciphered.

One of ordinary skill in the art would have been motivated to combine any one or more of the references provided in Exhibits A1-A7 with any one or more of the above exemplary Outputting References to improve the function and utility of the same, and such a combination would have been within that person's skill. For example, each of the Using References describe outputting or displaying the results of the target identification or classification analysis:

- Lee, [174] ("The feature vector X represents a point in a multidimensional vector space with each feature component defining an axis. This space is partitioned into two halfspaces, one corresponding to the class 'target' and the other to 'clutter', by a hyperplane called the 'discrimination surface' S, represented by a vector normal to it."), Fig. 1.

- Turk (showing figures, such as Fig. 7, where detected target face is displayed"), Fig. 7.

- Sanger, 470 ("We next convolve each of the masks with the original image in Figure 7 to show which regions of the image give high response for each mask. The convolution results are shown in Figure 8b. To estimate the local variance, we full-wave rectify the images of Figure 8b, and low-pass filter the results with a Gaussian of standard deviation 4 pixels. This gives a measure of local 'energy' or variance, and the result is shown in Figure 8c for each mask. Here we can clearly see that certain masks respond preferentially to one or the other of the two textures in the image."), Fig. 8.

- Liou, I-705 ("The table below summarizes the results on the chosen data files. The second column in the table is the total number of windows for the image of the relevant target event. The third column is the number of windows that were considered to be possible target windows after the detection process. The target detection rates which are the percentage of the actual target windows retained in the results are shown in the fourth column. The clutter removal rates which are the percentage of the non-target windows removed are given in the fifth column. Note that there could be several windows that cover the same target track, e.g., see the last row in the table. The graphical representation of the original data and the processed data are shown in Figs. 2 and 3 for two events 20001 and 60001. As can be seen the target tracks have clearly been detected"), Fig. 2, 3.

- Knecht, 3:29–39 ("FIG. 3 is a simplified schematic image representative of an image obtained by scanning the ships of FIG. 1; FIG. 4 is a graphical representation of a vector obtained by collapsing the pixels representing one of ship images of FIG. 3; FIG. 5 is a graphical representation of a feature vector representing the Fourier power spectrum of the vector of FIG. 4 and utilizable to classify the corresponding ship image; and FIG. 6 is a graph showing classification results obtained with the subject invention.") Figs. 3–5.

And each of the remaining references provided in Exhibits A1-A7 involve analyzing collected data to distinguish targets from non-targets and/or classify detected objects:

- Barnard, Abstract ("A target detection system is provided for examining picture signals of a scene which may contain a target signal (15,16) to be detected against background signals (17,18).").
- Lawrence, 45:15–25 ("By way of example, the mechanism by which the PA can accomplish automatic target recognition and parameter estimation is described, and how to train and operate a system. The training procedure and the result thereof is first described, which for this system is the equivalent of defining the feature set and building the feature detectors for a model based vision scheme.").

Combining the prior art identified in Exhibits A1-A7 with any one of the above exemplary Outputting References would have amounted to applying a known technique to a known device ready for improvement to yield predictable results. Furthermore, the prior art and exemplary Outputting References are in the same field of endeavor (*e.g.*, methods and systems for pattern recognition, feature extraction, or target detection) and given the design needs (*e.g.*, improving techniques for distinguishing between features/targets and background), combined with a finite number of identified, predictable solutions (*e.g.*, expanding beyond existing pattern recognition methods), a POSITA would have been motivated to combine the teachings of these references.

Alternatively, each of the references provided in Exhibits A1-A7 alone renders this element obvious, in view of the knowledge and skill of a POSITA. That is, it would have been obvious in the view of one of ordinary skill in the art to add the above limitations to any one or more of the references provided in Exhibits A1-A7. A POSITA would have been motivated to incorporate outputting the determined target/feature and background information into existing pattern recognition methods, and such a combination would have been within that person's skill. As demonstrated in the exemplary Outputting References listed above, outputting the target/feature and background information in the form of charts, graphs, or images was were well-known in the art by the time of the Asserted Patent's claimed invention and thus, adding it to any one or more

of the references provided in Exhibits A1-A7 would have amounted to applying a known technique to a known device ready for improvement to yield predictable results.

5. The Parallel References

The Parallel References are: Lee, Turk, Sanger, Liou, and Lawrence. The relevant claims and/or claim elements of the Parallel References are identified below:

Patent	Claim	Claim Language
’639	4	“The method of claim 1, wherein parallel hardware architectures are employed to use said feature information to distinguish particular targets from background clutter.”
’639	5	“The method of claim 4, wherein said parallel hardware architectures comprise neural networks.”

To the extent Intellectual Ventures contends that an anticipatory reference in Exhibits A1-A5 fails to disclose these claims and/or claim elements, such reference can be combined with the corresponding disclosures from any one or more of the Parallel References to render it obvious under 35 U.S.C. § 103(a), at least based on Intellectual Ventures’ Infringement Contentions, apparent claim constructions, and application of the claims to the Accused Instrumentalities, as best as they can be deciphered.

One of ordinary skill in the art would have been motivated to combine any one or more of the references provided in Exhibits A1-A7 with any one or more of the above exemplary Parallel References to improve the function and utility of the same, and such a combination would have been within that person’s skill. For example, each of the Parallel References describe methods of target detect and/or object classification using parallel computing architecture, such as neural networks:

- Lee, [173] (“Many conventional neural network models emphasize massively parallel and distributed processing. Each neuron follows a simple transition function and does not necessarily have any physical meaning; it is the global representation and behavior of the whole network that is meaningful. Our neural network approach which is

inspired by the works on Adaline/Madaline by Widrow et al. [5] assigns physical meaning to each neuron.”).

- Turk, 83 (“Although we have presented the eigenfaces approach to face recognition as an information-processing model, it may be implemented using simple parallel computing elements, as in a connectionist system or artificial neural network.”).

- Sanger, 465 (“Equation (13) shows how we can implement the algorithm using only local operations. This ability is important for training neural networks using parallel hardware.”).

- Liou, I-702 (“Since the target track extends only over a small portion of the entire 3-D image, windowing during the detection process was adopted. The benefits of windowing include: suitability for parallel processing and reduction in computational complexity.”), Title (“Detection of Dim Targets In High Cluttered Background Using High Order Correlation Neural Networ”).

- Lawrence, Title (“Continuous Bayesian Estimation with a Neural Network Architecture”).

And each of the remaining references provided in Exhibits A1-A7 analyzing collected data to distinguish targets from non-targets and/or classify detected objects, and using parallel computing architecture or neural networks would improve the analysis:

- Barnard, Abstract (“A target detection system is provided for examining picture signals of a scene which may contain a target signal (15,16) to be detected against background signals (17,18).”).

- Knecht, Abstract (“A method and system for classifying a raster scanned target image by collapsing the image into a vector corresponding to a horizontal line of the image, mathematically transforming this vector into a feature vector which corresponds to the power spectrum of the collapsed image, and comparing the feature vector with stored decision rules corresponding to classes of possible target objects to determine if the image represents an object in one of the classes.”).

Combining the prior art identified in Exhibits A1-A7 with any one of the above exemplary Parallel References would have amounted to applying a known technique to a known device ready for improvement to yield predictable results. Furthermore, the prior art and exemplary Parallel References are in the same field of endeavor (*e.g.*, methods and systems for pattern recognition, feature extraction, or target detection) and given the design needs (*e.g.*, improving techniques for

distinguishing between features/targets and background), combined with a finite number of identified, predictable solutions (*e.g.*, expanding beyond existing pattern recognition methods), a POSITA would have been motivated to combine the teachings of these references.

Alternatively, each of the references provided in Exhibits A1-A7 alone renders this element obvious, in view of the knowledge and skill of a POSITA. That is, it would have been obvious in the view of one of ordinary skill in the art to add the above limitations to any one or more of the references provided in Exhibits A1-A7. A POSITA would have been motivated to incorporate parallel computing and/or neural networks into existing pattern recognition methods for more efficiency and accuracy, and such a combination would have been within that person's skill. As demonstrated in the exemplary Parallel References listed above, analyzing data to distinguish between targets and background with parallel computing and neural networks was well-known in the art by the time of the Asserted Patent's claimed invention and thus, adding it to any one or more of the references provided in Exhibits A1-A7 would have amounted to applying a known technique to a known device ready for improvement to yield predictable results.

6. The Target Classes References

The Target Classes References are: Lee, Turk, Sanger, and Knecht. The relevant claims and/or claim elements of the Target Classes References are identified below:

Patent	Claim	Claim Language
'639	7	"The method of claim 1, wherein said feature information is further used to distinguish two target classes or a plurality of target classes from one another."

To the extent Intellectual Ventures contends that an anticipatory reference in Exhibits A1-A7 fails to disclose these claims and/or claim elements, such reference can be combined with the corresponding disclosures from any one or more of the Target Classes References to render it obvious under 35 U.S.C. § 103(a), at least based on Intellectual Ventures' Infringement

Contentions, apparent claim constructions, and application of the claims to the Accused Instrumentalities, as best as they can be deciphered.

One of ordinary skill in the art would have been motivated to combine any one or more of the references provided in Exhibits A1-A7 with any one or more of the above exemplary Target Classes References to improve the function and utility of the same, and such a combination would have been within that person's skill. For example, each of the Target Classes References describe methods of analyzing data to detect a target/object and further classify the detected target/object:

- Lee, [175] ("Learning Network Algorithm: As shown in Figure 2, the learning network includes two layers of processing. The first layer includes several single neuron classifiers each takes the input from the input feature vector and outputs its classification result to an output neuron and a learning control neuron. The output and learning control neurons constitute the second layer of the learning network. The output neuron is dedicated for feature classification and the learning control neuron is used only in the learning phase").

- Turk, 73 ("1. Calculate a set of weights based on the input image and the M eigenfaces by projecting the input image onto each of the eigenfaces. 2. Determine if the image is a face at all (whether known or unknown) by checking to see if the image is sufficiently close to 'face space.' 3. If it is a face, classify the weight pattern as either a known person or as unknown.").

- Sanger, 469 ("Since the Generalized Hebbian Algorithm finds the eigenvectors of the input distribution, we would expect that the outputs of the network will respond to 'significant' features of the environment. The outputs will have high variance, and can be used for separating the input into different classes. To illustrate these ideas, we demonstrate the use of such a network to perform a simple texture segmentation task.").

- Knecht, 1:7–14 ("This invention pertains to a method and system for the automatic classification of images, more particularly, it pertains to such a method and system for classifying the image, of a scanned object as the image of an object of one of a plurality of predetermined classes of objects Most particularly, this invention relates to such a method and system useful in a missile for classifying a potential target object, such as a ship, as a member of one class of several predetermined classes of ships.").

And each of the remaining references provided in Exhibits A1-A7 involve analyzing collected data to distinguish targets from non-targets and/or classify detected objects:

- Barnard, Abstract ("A target detection system is provided for examining picture signals of a scene which may contain a target signal (15,16) to be detected against background signals (17,18).").

- Liou, Abstract ("This paper presents the development and neural network implementation of a high order spatiotemporal correlation scheme for clutter rejection and dim target track detection from infrared (IR) data.").

- Lawrence, 45:15–25 ("By way of example, the mechanism by which the PA can accomplish automatic target recognition and parameter estimation is described, and how to train and operate a system. The training procedure and the result thereof is first described, which for this system is the equivalent of defining the feature set and building the feature detectors for a model based vision scheme.").

Combining the prior art identified in Exhibits A1-A7 with any one of the above exemplary Target Classes References would have amounted to applying a known technique to a known device ready for improvement to yield predictable results. Furthermore, the prior art and exemplary Target Classes References are in the same field of endeavor (*e.g.*, methods and systems for pattern recognition, feature extraction, or target detection) and given the design needs (*e.g.*, improving techniques for distinguishing between features/targets and background), combined with a finite number of identified, predictable solutions (*e.g.*, expanding beyond existing pattern recognition methods), a POSITA would have been motivated to combine the teachings of these references.

Alternatively, each of the references provided in Exhibits A1-A7 alone renders this element obvious, in view of the knowledge and skill of a POSITA. That is, it would have been obvious in the view of one of ordinary skill in the art to add the above limitations to any one or more of the references provided in Exhibits A1-A7. A POSITA would have been motivated to incorporate identify and classify the different types of targets/features using existing pattern recognition methods for additional applications, and such a combination would have been within that person's skill. As demonstrated in the exemplary Target Classes References listed above, distinguishing between targets and background while also identifying and classifying the different targets was well-known in the art by the time of the Asserted Patent's claimed invention and thus, adding it to

any one or more of the references provided in Exhibits A1-A7 would have amounted to applying a known technique to a known device ready for improvement to yield predictable results.

B. The ’743 Patent

NAME	DESCRIPTION:				
	The Positive Integer References	The Receipt of Information References	The Response to Failure References	The Recovery Action References	The Application Storing References
Welch I		✓	✓	✓	✓
Alexander		✓	✓	✓	✓
Welch II		✓	✓	✓	✓
Hosokawa	✓		✓		✓
Keshav	✓				✓
Peacock					✓
Shah		✓			

1. The Positive Integer References

The Positive Integer References are: Hosokawa and Keshav. The relevant claims and/or claim elements of the Positive Integer References are identified below:

Patent	Claim	Claim Language
’743	1[h]	“where M and N are positive integers and where M may be equal to, greater than, or less than N.”

To the extent Intellectual Ventures contends that an anticipatory reference in Exhibits B1-B7 fails to disclose these claims and/or claim elements, such reference can be combined with the corresponding disclosures from any one or more of the Positive Integer References to render it obvious under 35 U.S.C. § 103(a), at least based on Intellectual Ventures’ Infringement Contentions, apparent claim constructions, and application of the claims to the Accused Instrumentalities, as best as they can be deciphered.

One of ordinary skill in the art would have been motivated to combine any one or more of the references provided in Exhibits B1-B7 with any one or more of the above exemplary Positive

Integer References to improve the function and utility of the same, and such a combination would have been within that person's skill. For example, each of the Positive Integer References describe a network architecture in which the number of managed computer programs and hosts are both positive integers and the number of managed computer programs is equal to, greater than, or less than the number of hosts:

- Hosokawa, 6:30-55 ("A first embodiment of the present invention is explained using FIGS. 1-5. In FIG. 1, a plurality of computers A-N (100a-101n) are included in a cluster. The respective computers are executing cluster daemon A-N (102a-102n), and the respective cluster daemons start-up respective package programs A1-N2 (103a1-103n2). In this specification, package program is a general term referring to application programs and to service programs. The respective cluster daemons monitor and control resources (CPU, LAN, Disk, package programs, network addresses and so on) on the computers being executed, and stores the data on the respective computers as local data A-N (104a-104n). A manager 105 communicates with cluster daemons on the respective computers to monitor and control the entire cluster system, and stores global data 106."); *see also* Hosokawa Fig. 1.

- Keshav, 3:46-64 ("FIG. 1 shows an embodiment of a system for dynamic resource configuration in virtual servers. A dynamic resource configuration module 100 is coupled via a network to a group of physical host machines 160 (160A, 160B and 160C), or may be resident on any of these hosts 160. The physical host machines 160 may be any kind of computer adapted to support virtual servers. The module 100 may be implemented in a software driver. It is to be understood that the dynamic resource configuration module 100 will typically support more than one physical host machine 160. However, in one embodiment, the dynamic resource configuration module 100 may support a single physical host 160. The group of physical hosts 160 contains a group of virtual servers 162. Physical host 160A contains virtual servers 162A and 162B; physical host 160B contains virtual servers 162C, 162D and 162E; and physical host 160C contains virtual servers 162F and 162G."); *see also* Keshav, Fig. 1.

And the remaining references provided in Exhibits B1-B7 seek ways of improving efficiency of distributed networks by, for example, by managing resources through use of multiple hosts:

- Welch I, Pages 2-3 ("The physical QoS management architecture is shown in Figure 2. The core component of the middleware is the resource manager. It is activated when programs die and when time-constrained control paths miss their deadlines. In response to these events, it takes appropriate measures to improve the quality of service delivered to the applications. The reallocations made by the resource manager make use of information provided by the hardware and software monitors, as well as from a specification file that describes QoS requirements and the structures of the software system and the hardware system. The system data repository component is responsible

for collecting and maintaining all system information. The program control (PC) component consists of a central control program and a set of startup daemons. When resource manager needs to start a program on a particular host, it informs the control program, which notifies the startup daemon on that host. The HCI provides information to the user regarding the system configuration, application status, and reallocation decisions. It also allows the operator to dynamically modify the behavioral characteristics of the resource discovery and the resource manager components."); *see also* Welch I, Fig. 2.

- Alexander, Figure 3:

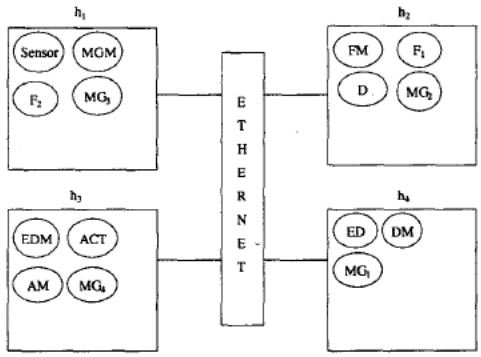

Figure 3. Initial Process-Host Mapping

- Welch II, page 7 "The actions performed in start-up mode are as follows: (1) The System Data Repository (SDR) loads the user system specification file (via a compiler) into data structures (step 0 of Figure 8). (2) The SDR sends the compiled system description to the Resource Management (RM) HCI for display (step 1). (3) Hardware (HW) Monitors (which run on each host) periodically calculate load indices for hosts and LANS, and pass this information to the Hardware Data Repository (HDR) (step 2), which in turn passes such information to the SDR (step 3). (4) RM receives the system startup information from the SDR (step 4). (5) RM determines the initial hardware-to-software allocation and informs Program Control (PC) to start the Real-Time Control System (RTCS) application programs on specific hosts and LANs (step 5). (6) PC starts the programs (via daemons running on each host) and informs RM when finished (step 5). (7) RM sends startup information to the RM HCI for display (step 6). (8) RTCS application programs periodically send application profile information (time stamps and/or program/path latencies) to QoS Monitors (step 7). Global time is provided to the RTCS and to the QoS monitors via Network Time Protocol (NTP) [18].").

- Peacock, Page 27-28 ("With current practices, service management is accomplished through a number of diversely controlled devices. Remote Access Dial In User Service (RADIUS) servers provide Authentication, Authorization and Accounting (AAA) services critical to the business management capabilities. Domain Name Servers (DNS) provides a lookup service that retrieves information associated 23 with domain names. DNS services are critical to simple and effective Internet access. Dynamic Host

Configuration Protocol (DHCP) enables a server to dynamically assign IP addresses to end- users. DNS and DHCP are commonly integrated into one networking device. Service Connection Management mechanisms provision connections to DSL end-users, relate subscribers to DSL services, view SNMP traps and access the fault, configuration, accounting, performance, security (FCAPS} functionality. A number of distinct devices not optimized for interaction and cohesive service execution characterize current practices.”).

- Shah, 13:20-45 (“NodeSI informs NetSI of communication faults that occur between two nodes. NetSI stores or takes action on the fault based on previous information receive (if any). Each NetSI determines the status of the reporting and problem nodes. If either server is halted, the communication fault report is discarded since the integrity of the data cannot be assured. If neither server is halted, the Communication Fault List is searched for another report on the problem node. If no report on the problem node is found, a Communication Fault List entry is added to the List with the server information. If another report of the problem node is found and another reporting server has reported it, the problem server is set up for downgrade processing. Once a decision is made about whether the server should be downgraded, NetSI determines if it should handle it (based on its active state and whether or not the target server is itself.) If it should handle the downgrade, NetSI calls NetPM's Immediate Halt operation to either Auto Halt or Manually Halt the problem node. If the server to be halted is the active PM, NetSI updates the active status accordingly before halting the node. Also, if the target is part of the local site, NetSI informs the Host via ConfigMgr that a status change is occurring and initiates recovery of the Processor service group (through ConfigMgr) if it determines that the Processor service group of the target server should be recovered. NetSI also writes an entry to the network configuration report file indicating the halt is occurring due to a communication fault.”).

Combining the prior art identified in Exhibits B1-B7 with any one of the above exemplary Positive Integer References would have amounted to applying a known technique to a known device ready for improvement to yield predictable results. Furthermore, the prior art and exemplary Positive Integer References are in the same field of endeavor (*e.g.*, methods and systems for optimizing resource demands in distributed networks) and given the design needs (*e.g.*, improving distributed network optimizing techniques), combined with a finite number of identified, predictable solutions (*e.g.*, expanding beyond existing network distribution and optimization methods), a POSITA would have been motivated to combine the teachings of these references.

Alternatively, each of the references provided in Exhibits B1-B7 alone renders this element obvious, in view of the knowledge and skill of a POSITA. That is, it would have been obvious in

the view of one of ordinary skill in the art to add the above limitations to any one or more of the references provided in Exhibits B1-B7. A POSITA would have been motivated to incorporate techniques for comparing the health of a host with the operation of an application in distributed networks, and such a combination would have been within that person's skill. As demonstrated in the exemplary Positive Integer References listed above, techniques for comparing the health of a host with the operation of an application were well-known in the art by the time of the Asserted Patent's claimed invention and thus, adding it to any one or more of the references provided in Exhibits B1-B7 would have amounted to applying a known technique to a known device ready for improvement to yield predictable results.

2. The Receipt of Information References

The Receipt of Information References are: Welch I, Alexander, Welch II, and Shah. The relevant claims and/or claim elements of the Receipt of Information References are identified below:

Patent	Claim	Claim Language
'743	14	"wherein the first function receives program control information comprising application status and detected application faults for each of the M managed characteristic application computer programs, and detected failures regarding the N hosts."
'743	16	"wherein the first function receives application performance data representing each one of the M managed characteristic application computer programs"

To the extent Intellectual Ventures contends that an anticipatory reference in Exhibits B1-B7 fails to disclose these claims and/or claim elements, such reference can be combined with the corresponding disclosures from any one or more of the Receipt of Information References to render it obvious under 35 U.S.C. § 103(a), at least based on Intellectual Ventures' Infringement Contentions, apparent claim constructions, and application of the claims to the Accused Instrumentalities, as best as they can be deciphered.

One of ordinary skill in the art would have been motivated to combine any one or more of the references provided in Exhibits B1-B7 with any one or more of the above exemplary Receipt of Information References to improve the function and utility of the same, and such a combination would have been within that person's skill. For example, each of the Receipt of Information References describe receiving application data to ensure quality of service is maintained:

- Welch I, Pages 2-3 ("The physical QoS management architecture is shown in Figure 2. The core component of the middleware is the resource manager. It is activated when programs die and when time-constrained control paths miss their deadlines. In response to these events, it takes appropriate measures to improve the quality of service delivered to the applications. The reallocations made by the resource manager make use of information provided by the hardware and software monitors, as well as from a specification file that describes QoS requirements and the structures of the software system and the hardware system. The system data repository component is responsible for collecting and maintaining all system information. The program control (PC) component consists of a central control program and a set of startup daemons. When resource manager needs to start a program on a particular host, it informs the control program, which notifies the startup daemon on that host. The HCI provides information to the user regarding the system configuration, application status, and reallocation decisions. It also allows the operator to dynamically modify the behavioral characteristics of the resource discovery and the resource manager components.").

- Alexander, Page 2224 ("In order to apply control theory to the load balancing problem described in the preceding section, we first need to develop a feedback control system architecture as dictated by Figure 1. Figure 2 depicts a standard feedback block diagram for control law design. In the context of load balancing, the block labeled 'Plant' constitutes the process to be controlled which corresponds to a collection of host processors with associated communication links, the actuators which implement the reallocation of processes, and the sensors which monitor CPU load on each host. The Plant is modeled as having two types of input: exogenous inputs, which correspond to new processes that are spawned in a dynamic real-time environment, and control inputs which consist of commands to allocate new processes and/or reallocate existing ons. The Plant is modeled as having two types of output: a performance output, which in this case is given by the performance measure (l), and a measured output which corresponds to the CPU utilization of each host. The block labeled 'Controller' analyzes the host CPU utilization information (measured output) and, according to a prescribed policy, issues appropriate allocation and/or reallocation commands (control inputs). Thus the Controller corresponds to the Load Balancer block in Figure 1.").

- Welch II, Page 6 ("6. Dynamic QoS analysis techniques: This section illustrates the use of the dynamic and static system models for adaptive QoS management. Monitoring of real-time QoS involves the collection of time stamped events sent from applications. The times when application/replica 'a' starts and ends processing batch 'j' of data

during cycle ‘c’ of Pi are denoted by s(Pi.DS(c, a, j)) and e(Pi.DS(c, a, j)), respectively. The times when ‘a’ starts and ends processing of data stream element Pi.DS(c, a)k are represented as s(Pi.DS(c, a)k) and e(Pi.DS(c, a)k), respectively. In addition to grouping related actions, the unhealthy applications are ranked in decreasing order by the degree of slowdown they are experiencing. The slowdown experienced by application ‘a’ during cycle ‘c’ of Pi is computed as x(a, c, Pi) = max(lOBS(Pi,c)) / max(lOBS(Pi,d)), where ‘d’ is the cycle wherein ‘a’ exhibited its ‘best’ performance over all cycles wherein ‘a’ had the same tactical load as in cycle ‘c’.”).

- Shah, 13:20-46 (“NodeSI informs NetSI of communication faults that occur between two nodes. NetSI stores or takes action on the fault based on previous information receive (if any). Each NetSI determines the status of the reporting and problem nodes. If either server is halted, the communication fault report is discarded since the integrity of the data cannot be assured. If neither server is halted, the Communication Fault List is searched for another report on the problem node. If no report on the problem node is found, a Communication Fault List entry is added to the List with the server information. If another report of the problem node is found and another reporting server has reported it, the problem server is set up for downgrade processing. Once a decision is made about whether the server should be downgraded, NetSI determines if it should handle it (based on its active state and whether or not the target server is itself.) If it should handle the downgrade, NetSI calls NetPM's Immediate Halt operation to either Auto Halt or Manually Halt the problem node. If the server to be halted is the active PM, NetSI updates the active status accordingly before halting the node. Also, if the target is part of the local site, NetSI informs the Host via ConfigMgr that a status change is occurring and initiates recovery of the Processor service group (through ConfigMgr) if it determines that the Processor service group of the target server should be recovered. NetSI also writes an entry to the network configuration report file indicating the halt is occurring due to a communication fault.”).

And each of the remaining references provided in Exhibits B1-B7 seek ways of improving efficiency of distributed networks by, for example, monitoring application data:

- Hosokawa, 7:34-46 (“A resource state monitoring device 204 periodically transmits a resource state obtaining demand (D208) to the computers storing resources in the cluster, receives the response of a resource state (D209), refers (D210) to the resource state data base 203, and notifies (D211) a resource state change processing device 205 when the resource state changes. The resource state change processing device 205 updates (D212) the resource state data base 203 when receiving the notice (D211) from the resource state monitoring device 204, refers (D213) to a notice setting data base (207), and notifies (D214) the resource state change notifying device 208 if the notice setting data base is set.”).

- Keshav, 5:6-21 (“The virtual server resource monitor 110 monitors the resource usage of the virtual servers 162 to determine if they are overloaded. The virtual server resource modifier 120 dynamically modifies the resource allocations of the virtual servers 162 on an as-needed basis. The physical host load-balancer 130 periodically

monitors the resource usage of the physical hosts 160, and uses the dynamic virtual server mover 140 to transfer virtual servers 162 between physical hosts 160 as needed to balance the loads of the physical hosts 160. The file system 150 is used for storing state information associated with a particular virtual server 162 when transferring the particular virtual server 162 to a different physical host 160. In another embodiment, the file system 150 is not used, and state information is copied directly from one physical host to another physical host to transfer a virtual server.”).

- Peacock, Page 27-28 (“With current practices, service management is accomplished through a number of diversely controlled devices. Remote Access Dial In User Service (RADIUS) servers provide Authentication, Authorization and Accounting (AAA) services critical to the business management capabilities. Domain Name Servers (DNS) provides a lookup service that retrieves information associated 23 with domain names. DNS services are critical to simple and effective Internet access. Dynamic Host Configuration Protocol (DHCP) enables a server to dynamically assign IP addresses to end- users. DNS and DHCP are commonly integrated into one networking device. Service Connection Management mechanisms provision connections to DSL end-users, relate subscribers to DSL services, view SNMP traps and access the fault, configuration, accounting, performance, security (FCAPS} functionality. A number of distinct devices not optimized for interaction and cohesive service execution characterize current practices.”).

Combining the prior art identified in Exhibits B1-B7 with any one of the above exemplary Receipt of Information References would have amounted to applying a known technique to a known device ready for improvement to yield predictable results. Furthermore, the prior art and exemplary Receipt of Information References are in the same field of endeavor (*e.g.*, methods and systems for optimizing resource demands in distributed networks) and given the design needs (*e.g.*, improving distributed network optimizing techniques), combined with a finite number of identified, predictable solutions (*e.g.*, expanding beyond existing network distribution and optimization methods), a POSITA would have been motivated to combine the teachings of these references.

Alternatively, each of the references provided in Exhibits B1-B7 alone renders this element obvious, in view of the knowledge and skill of a POSITA. That is, it would have been obvious in the view of one of ordinary skill in the art to add the above limitations to any one or more of the references provided in Exhibits B1-B7. A POSITA would have been motivated to incorporate

gathering information such as application status and host status (such as detected failures) in distributed networks, and such a combination would have been within that person's skill. As demonstrated in the exemplary Receipt of Information References listed above, gathering information such as application status and host status (such as detected failures) were well-known in the art by the time of the Asserted Patent's claimed invention and thus, adding it to any one or more of the references provided in Exhibits B1-B7 would have amounted to applying a known technique to a known device ready for improvement to yield predictable results.

3. The Response to Failure References

The Response to Failure References are: Welch I, Alexander, Welch II, and Hosokawa. The relevant claims and/or claim elements of the Response to Failure References are identified below:

Patent	Claim	Claim Language
'743	18[a]	"responding to application and host failures by determining if and what recovery actions should be taken"

To the extent Intellectual Ventures contends that an anticipatory reference in Exhibits B1-B7 fails to disclose these claims and/or claim elements, such reference can be combined with the corresponding disclosures from any one or more of the Response to Failure References to render it obvious under 35 U.S.C. § 103(a), at least based on Intellectual Ventures' Infringement Contentions, apparent claim constructions, and application of the claims to the Accused Instrumentalities, as best as they can be deciphered.

One of ordinary skill in the art would have been motivated to combine any one or more of the references provided in Exhibits B1-B7 with any one or more of the above exemplary Response to Failure References to improve the function and utility of the same, and such a combination

would have been within that person's skill. For example, each of the Response to Failure References describe methods for managing host failures:

- Welch 1, Page 2-3 ("The physical QoS management architecture is shown in Figure 2. The core component of the middleware is the resource manager. It is activated when programs die and when time-constrained control paths miss their deadlines. In response to these events, it takes appropriate measures to improve the quality of service delivered to the applications. The reallocations made by the resource manager make use of information provided by the hardware and software monitors, as well as from a specification file that describes QoS requirements and the structures of the software system and the hardware system. The system data repository component is responsible for collecting and maintaining all system information. The program control (PC) component consists of a central control program and a set of startup daemons. When resource manager needs to start a program on a particular host, it informs the control program, which notifies the startup daemon on that host. The HCI provides information to the user regarding the system configuration, application status, and reallocation decisions. It also allows the operator to dynamically modify the behavioral characteristics of the resource discovery and the resource manager components."

- Alexander, Page 2224 ("Within this framework, the following key issues arise as we endeavor to apply control theory to the problem of developing suitable reallocation policies for load balancing. First, performance requirements need to be precisely formulated. For the load balancing example, the objective is to achieve the performance bound (1) for a specified value of E. Typically, the control system designer is interested in internal stability in addition to performance metrics associated with regulating the performance output. This motivates the need for precise stability definitions for dynamic real-time computing systems and associated analysis tools. Clearly, formal characterizations of stability must be consistent with phenomena observed in practice such as thrashing [5]. In the context of load balancing, it may happen that the performance bound (1) is satisfied yet processes are constantly being reallocated resulting in comparable though unnecessarily high host loads due to the increased overhead that is incurred. Ad-hoc techniques such as imposing transfer limits have been used in practice to reduce these unwanted effects. Other important performance characteristics such as robustness to model uncertainty (e.g. uncertain execution times) and fault tolerance (e.g., host or communication link failure) must also be translated into precise control-theoretic terms.").

- Welch II, Page 8 ("The actions taken in program recovery mode are: (1) If a sub-path (RTCS program) is terminated due to a hardware/ software failure, PC detects this and informs RM (step 5 of Figure 8). (2) RM finds a healthy host with the smallest load index by querying HA (step 9). (3) RM restarts the terminated program on the healthy host by informing PC (step 5), and also notifies RM HCI to update the display (step 6 of Figure 8). To avoid thrashing via restarting a faulty piece of software ad infinitum, this step is only repeated a fixed number of times.").

- Hosokawa, 18:28-39 ("If assuming the computer A 101a is stopped due to a fault or failure in the manner illustrated in FIG. 30B, after the state illustrated in FIG. 30A, the manager 105 in FIG. 27 starts to operate as explained above, and the package B 103b, whose output has been suppressed on the computer B 101b, starts outputting immediately in the manner illustrated in FIG. 30C. At this time, since the package B 103b has been operating in the same manner as in the package A 103a, the package A 103a changes to the package B 103b in an instant, and the recovery time is shorter than the normal recovery time in the system according to the ninth embodiment.").

And each of the remaining references provided in Exhibits D1-D7 seek ways of improving efficiency of distributed networks by, for example, managing potential network overload:

- Keshav, 5:46-67 ("If the virtual server is determined to be overloaded, a determination is made 230 as to whether the corresponding resource of the physical host hosting the virtual server resource is also overloaded. For example, referring to FIG. 1, if it was determined that a resource for virtual server 162B was overloaded, module 100 would then check to see if that same resource was overloaded for physical host 160A which contains virtual server 162B. A physical host 160 resource is determined to be overloaded if the physical host 160 does not have enough of the particular resource unallocated to the resident individual virtual servers 162 to service the resource increase request. The physical host resource is overloaded if: Resource request>Resource available; where Resource available≧0. For example, assume virtual server 162B requests an additional memory allocation of 1 megabyte. If physical host 160A has only 100 kilobytes of memory available (the rest already having been allocated to virtual servers 162A and 162B), then physical host 160A cannot service virtual server 162B's request and physical host 160A is considered overloaded. This same principle may be extended to other types of resources. If the particular physical host resource is not determined to be overloaded the virtual server resource allocation within the physical host is increased 240. The method then continues to monitor 210 virtual server resource denials.").

- Peacock, Page 18 ("“This architecture allows for the placement of increased intelligence at the host and service node levels, enabling enhanced service management, routing and QoS decisions throughout the network while minimizing stress inside of the network. As decisions are made by the external service node and carried out by the signaling protocol, greater external control can be extended to elements at various levels. The utilization of Internet Protocol (IP), Asynchronous Transfer Mode (ATM), Multiprotocol Label Switching (MPLS), Interior Gateway Protocols (IGPs), Exterior Gateway Protocols (EGPs), multicast protocols and next-generation protocols can be optimized through the overarching view the service nodes provide. The signaling protocol can interface the decisions of the service-policy program with those above-mentioned protocols. Moreover, this architecture enables the seamless and effective large-scale monitoring of services provisioned. Tracking of time and types of services used can be implemented, allowing for intelligent selection and distribution of future services.").

- Shah, 13:20-46 ("NodeSI informs NetSI of communication faults that occur between two nodes. NetSI stores or takes action on the fault based on previous information receive (if any). Each NetSI determines the status of the reporting and problem nodes. If either server is halted, the communication fault report is discarded since the integrity of the data cannot be assured. If neither server is halted, the Communication Fault List is searched for another report on the problem node. If no report on the problem node is found, a Communication Fault List entry is added to the List with the server information. If another report of the problem node is found and another reporting server has reported it, the problem server is set up for downgrade processing. Once a decision is made about whether the server should be downgraded, NetSI determines if it should handle it (based on its active state and whether or not the target server is itself.) If it should handle the downgrade, NetSI calls NetPM's Immediate Halt operation to either Auto Halt or Manually Halt the problem node. If the server to be halted is the active PM, NetSI updates the active status accordingly before halting the node. Also, if the target is part of the local site, NetSI informs the Host via ConfigMgr that a status change is occurring and initiates recovery of the Processor service group (through ConfigMgr) if it determines that the Processor service group of the target server should be recovered. NetSI also writes an entry to the network configuration report file indicating the halt is occurring due to a communication fault.").

Combining the prior art identified in Exhibits B1-B7 with any one of the above exemplary Response to Failure References would have amounted to applying a known technique to a known device ready for improvement to yield predictable results. Furthermore, the prior art and exemplary Response to Failure References are in the same field of endeavor (*e.g.*, methods and systems for optimizing resource demands in distributed networks) and given the design needs (*e.g.*, improving distributed network optimizing techniques), combined with a finite number of identified, predictable solutions (*e.g.*, expanding beyond existing network distribution and optimization methods), a POSITA would have been motivated to combine the teachings of these references.

Alternatively, each of the references provided in Exhibits B1-B7 alone renders this element obvious, in view of the knowledge and skill of a POSITA. That is, it would have been obvious in the view of one of ordinary skill in the art to add the above limitations to any one or more of the references provided in Exhibits B1-B7. A POSITA would have been motivated to incorporate adapting to respond to host application and host failures through recovery actions in distributed networks, and such a combination would have been within that person's skill. As demonstrated in

the exemplary Response to Failure References listed above, adapting to respond to host application and host failures through recovery actions in distributed networks were well-known in the art by the time of the Asserted Patent's claimed invention and thus, adding it to any one or more of the references provided in Exhibits B1-B7 would have amounted to applying a known technique to a known device ready for improvement to yield predictable results.

4. The Recovery Action References

The Recovery Action References are: Welch I, Alexander, and Welch II. The relevant claims and/or claim elements of the Recovery Action References are identified below:

Patent	Claim	Claim Language
'743	18[b]	"determining if and where to place new copies of managed characteristic application computer programs or which managed characteristic application computer programs should be shutdown when QoS Manager functions indicate that scale up or scale down actions should be taken based on measured application performance and QoS specifications established for the M managed characteristic application computer programs"

To the extent Intellectual Ventures contends that an anticipatory reference in Exhibits B1-B7 fails to disclose these claims and/or claim elements, such reference can be combined with the corresponding disclosures from any one or more of the Recovery Action References to render it obvious under 35 U.S.C. § 103(a), at least based on Intellectual Ventures' Infringement Contentions, apparent claim constructions, and application of the claims to the Accused Instrumentalities, as best as they can be deciphered.

One of ordinary skill in the art would have been motivated to combine any one or more of the references provided in Exhibits B1-B7 with any one or more of the above exemplary Recovery Action References to improve the function and utility of the same, and such a combination would have been within that person's skill. For example, each of the Recovery Action References describe actions to be taken in response to quality of service specifications:

- Welch I, Page 3 (““Figure 3 depicts the overall architecture of the adaptive resource management system. In its current implementation, resource management is activated in 3 modes: during the initial system start-up process (to start application programs), when a path becomes unhealthy (i.e., a path latency exceeds the required deadline), and when an application program is terminated (due to hardware/software faults). A description of each of these resource management modes follows. The actions performed in start-up mode are as follows: 1. The System Data Repository loads the user spec file via the Spec Libraries, which consist of a compiler and data structures to store the compiled real-time system and application QoS specifications (step 0 of Figure 3). 2. The System Data Repository sends the system information to Resource Management Human Computer Interface (RM HCI) for display purposes (step 1 of Figure 3). 3. Hardware (HW) Monitors continuously observe a resource’s load index and pass this information to the Hardware Data Repository (step 2 of Figure 3), which in turn passes such information to the System Data Repository (step 3 of Figure 3). 4. The Resource Manager receives the initial startup information from the System Data Repository, as specified by the spec file (step 4 of Figure 3). 5. The Resource Manager informs the Program Control to start the Real-Time Control System (RTCS) application programs on the specified hosts (step 5 of Figure 3). 6. The Program Control starts the programs and informs the Resource Manger accordingly (step 5 of Figure 3). 7. The Resource Manger sends startup information to RM HCI for display purposes (step 6 of Figure 3). 8. The RTCS continuously sends the application profile (time stamps or program/path latencies) information to QoS Monitors (step 7 of Figure 3). Global time is made available to RTCS via the Network Time Protocol (NTP) package. The sequence performed during QoS monitoring and enforcement mode is: 6. If a path becomes unhealthy (misses its deadline), the QoS Monitors detect such a condition, diagnose the cause of poor health, and suggest an action (such as moving or replicating an application program) to the Resource Manager (step 8 of Figure 3). 7. The Resource Manger needs to decide on which host(s) and LAN(s) the unhealthy sub-path needs to be replicated or moved. This decision is made by choosing the host(s) and LAN(s) with the smallest load indices. The Hardware Analyzer ranks the hosts and LANs in ascending order of their load index and passes this information to the Resource Manager (step 9 of Figure 3). 8. Once a host is selected, the Resource Manger notifies the Program Control to make the change (step 5 of Figure 3) and updates the RM HCI accordingly (step 6 of Figure 3).”

- Alexander, Page 2224 (“3 Feedback Control Formulation; In order to apply control theory to the load balancing problem described in the preceding section, we first need to develop a feedback control system architecture as dictated by Figure 1. Figure 2 depicts a standard feedback block diagram for control law design. In the context of load balancing, the block labeled ‘Plant’ constitutes the process to be controlled which corresponds to a collection of host processors with associated communication links, the actuators which implement the reallocation of processes, and the sensors which monitor CPU load on each host. The Plant is modeled as having two types of input: exogenous inputs, which correspond to new processes that are spawned in a dynamic real-time environment, and control inputs which consist of commands to allocate new processes and/or reallocate existing ons. The Plant is modeled as having two types of output: a

performance output, which in this case is given by the performance measure (l), and a measured output which corresponds to the CPU utilization of each host. The block labeled 'Controller' analyzes the host CPU utilization information (measured output) and, according to a prescribed policy, issues appropriate allocation and/or reallocation commands (control inputs). Thus the Controller corresponds to the Load Balancer block in Figure 1. Within this framework, the following key issues arise as we endeavor to apply control theory to the problem of developing suitable reallocation policies for load balancing. First, performance requirements need to be precisely formulated. For the load balancing example, the objective is to achieve the performance bound (1) for a specified value of E. Typically, the control system designer is interested in internal stability in addition to performance metrics associated with regulating the performance output. This motivates the need for precise stability definitions for dynamic real-time computing systems and associated analysis tools. Clearly, formal characterizations of stability must be consistent with phenomena observed in practice such as thrashing [5]. In the context of load balancing, it may happen that the performance bound (1) is satisfied yet processes are constantly being reallocated resulting in comparable though unnecessarily high host loads due to the increased overhead that is incurred. Ad-hoc techniques such as imposing transfer limits have been used in practice to reduce these unwanted effects. Other important performance characteristics such as robustness to model uncertainty (e.g. uncertain execution times) and fault tolerance (e.g., host or communication link failure) must also be translated into precise control-theoretic terms.")

- Welch II, Page 8 ("The sequence performed during QoS monitoring and enforcement mode is: (1) If a path becomes unhealthy (misses its deadline), the QoS Monitors detect such a condition, diagnose the cause of poor health, and suggest actions (such as moving and/or replicating an application program(s)) to RM (step 8 of Figure 8). (2) RM selects the host onto which the unhealthy sub-path(s) needs to be replicated or moved, by choosing the host with the smallest load index. To enable this, the Hardware Analyzer (HA) ranks the hosts in ascending order by load index [25] and passes this information to the Resource Manager (step 9). (3) RM requests PC to enact the new allocation (step 5) and updates the RM HCI accordingly (step 6).").

And each of the remaining references provided in Exhibit B1-B7 seek ways of preventing loss of application continuity in distributed networks, for example, by managing network resources:

- Hosokawa, 18:28-39 ("If assuming the computer A 101a is stopped due to a fault or failure in the manner illustrated in FIG. 30B, after the state illustrated in FIG. 30A, the manager 105 in FIG. 27 starts to operate as explained above, and the package B 103b, whose output has been suppressed on the computer B 101b, starts outputting immediately in the manner illustrated in FIG. 30C. At this time, since the package B 103b has been operating in the same manner as in the package A 103a, the package A 103a changes to the package B 103b in an instant, and the recovery time is shorter than the normal recovery time in the system according to the ninth embodiment.").

- Keshav, 5:46-67 ("If the virtual server is determined to be overloaded, a determination is made 230 as to whether the corresponding resource of the physical host hosting the virtual server resource is also overloaded. For example, referring to FIG. 1, if it was determined that a resource for virtual server 162B was overloaded, module 100 would then check to see if that same resource was overloaded for physical host 160A which contains virtual server 162B. A physical host 160 resource is determined to be overloaded if the physical host 160 does not have enough of the particular resource unallocated to the resident individual virtual servers 162 to service the resource increase request. The physical host resource is overloaded if: Resource request>Resource available; where Resource available≧0. For example, assume virtual server 162B requests an additional memory allocation of 1 megabyte. If physical host 160A has only 100 kilobytes of memory available (the rest already having been allocated to virtual servers 162A and 162B), then physical host 160A cannot service virtual server 162B's request and physical host 160A is considered overloaded. This same principle may be extended to other types of resources. If the particular physical host resource is not determined to be overloaded the virtual server resource allocation within the physical host is increased 240. The method then continues to monitor 210 virtual server resource denials.").

- Peacock, Page 18 ("“This architecture allows for the placement of increased intelligence at the host and service node levels, enabling enhanced service management, routing and QoS decisions throughout the network while minimizing stress inside of the network. As decisions are made by the external service node and carried out by the signaling protocol, greater external control can be extended to elements at various levels. The utilization of Internet Protocol (IP), Asynchronous Transfer Mode (ATM), Multiprotocol Label Switching (MPLS), Interior Gateway Protocols (IGPs), Exterior Gateway Protocols (EGPs), multicast protocols and next-generation protocols can be optimized through the overarching view the service nodes provide. The signaling protocol can interface the decisions of the service-policy program with those above-mentioned protocols. Moreover, this architecture enables the seamless and effective large-scale monitoring of services provisioned. Tracking of time and types of services used can be implemented, allowing for intelligent selection and distribution of future services.").

- Shah, 13:20-46 ("NodeSI informs NetSI of communication faults that occur between two nodes. NetSI stores or takes action on the fault based on previous information receive (if any). Each NetSI determines the status of the reporting and problem nodes. If either server is halted, the communication fault report is discarded since the integrity of the data cannot be assured. If neither server is halted, the Communication Fault List is searched for another report on the problem node. If no report on the problem node is found, a Communication Fault List entry is added to the List with the server information. If another report of the problem node is found and another reporting server has reported it, the problem server is set up for downgrade processing. Once a decision is made about whether the server should be downgraded, NetSI determines if it should handle it (based on its active state and whether or not the target server is itself.) If it should handle the downgrade, NetSI calls NetPM's Immediate Halt operation to either Auto Halt or Manually Halt the problem node. If the server to be halted is the active

> PM, NetSI updates the active status accordingly before halting the node. Also, if the target is part of the local site, NetSI informs the Host via ConfigMgr that a status change is occurring and initiates recovery of the Processor service group (through ConfigMgr) if it determines that the Processor service group of the target server should be recovered. NetSI also writes an entry to the network configuration report file indicating the halt is occurring due to a communication fault.”).

Combining the prior art identified in Exhibits B1-B7 with any one of the above exemplary Recovery Action References would have amounted to applying a known technique to a known device ready for improvement to yield predictable results. Furthermore, the prior art and exemplary Recovery Action References are in the same field of endeavor (*e.g.*, methods and systems for optimizing resource demands in distributed networks) and given the design needs (*e.g.*, improving distributed network optimizing techniques), combined with a finite number of identified, predictable solutions (*e.g.*, expanding beyond existing network distribution and optimization methods), a POSITA would have been motivated to combine the teachings of these references.

Alternatively, each of the references provided in Exhibits B1-B7 alone renders this element obvious, in view of the knowledge and skill of a POSITA. That is, it would have been obvious in the view of one of ordinary skill in the art to add the above limitations to any one or more of the references provided in Exhibits B1-B7. A POSITA would have been motivated to incorporate whether to copy or close applications based on quality of service in distributed networks, and such a combination would have been within that person’s skill. As demonstrated in the exemplary Recovery Action References listed above, whether to copy or close applications based on quality of service were well-known in the art by the time of the Asserted Patent’s claimed invention and thus, adding it to any one or more of the references provided in Exhibits B1-B7 would have amounted to applying a known technique to a known device ready for improvement to yield predictable results.

5. The Application Storing References

The Application Storing References are: Welch I, Alexander, Welch II, Hosokawa, Keshav, and Peacock. The relevant claims and/or claim elements of the Application Storing References are identified below:

Patent	Claim	Claim Language
’743	18[c]	“determining where new application computer programs should be placed when requested to do so by the fourth function group”
’743	18[d]	“determining which and how many application computer programs should run based on application system priorities.”

To the extent Intellectual Ventures contends that an anticipatory reference in Exhibits B1-B7 fails to disclose these claims and/or claim elements, such reference can be combined with the corresponding disclosures from any one or more of the Application Storing References to render it obvious under 35 U.S.C. § 103(a), at least based on Intellectual Ventures’ Infringement Contentions, apparent claim constructions, and application of the claims to the Accused Instrumentalities, as best as they can be deciphered.

One of ordinary skill in the art would have been motivated to combine any one or more of the references provided in Exhibits B1-B7 with any one or more of the above exemplary Application Storing References to improve the function and utility of the same, and such a combination would have been within that person’s skill. For example, each of the Application Storing References describe how to store applications based on system priorities:

- Welch I, Page 3 (“The actions taken in program recovery mode are described below: 1. If a sub-path (RTCS program) is terminated due to some hardware/software failure, Program Control detects such a condition and informs the Resource Manager accordingly (step 5 of Figure 3). 2. The Resource Manger finds the host(s) and LAN(s) with the smallest load indices by querying the Host analyzer (step 9 of Figure 3). 3. It then re-starts the terminated program on that host by informing the Program Control (step 5 of Figure 3) and RM HCI (step 6 of Figure 3) accordingly. In order to avoid thrashing (restarting a faulty piece of software), this step is only repeated an operator-determined fixed number of times.”).

- Alexander, Page 2223 ("To gain some insight into this problem, we now present an example of load balancing according to the architecture described above using a heuristic reallocation policy. For simplicity, we assume that a new process is assigned to the host with the lowest load, and a reallocation moves the process with the lowest CPU utilization from the host with the highest load to the host with the lowest load. In our examples, we set the threshold E = 0.10. Figure 3 shows an initial mapping of processes onto hosts of a distributed system. In Figure 4, we see the values of the function U(h,) for each host. Based on our definition of load balancing, the load across all the hosts is balanced. In Figure 5, new applications are placed on h, and 4. As a result, the load across all the hosts becomes unbalanced. This fact is reflected in Figure 6. The host monitors detect the unbalanced load, and a reallocation takes place. Based on our heuristics, the process with the lightest load, namely EDM, is moved from 4 to h4, since h4 is the host with the smallest load. This reallocation is shown graphically in Figure 7. In Figure 8, we see the resulting values for U(h,). In this case, by applying a heuristic, our goal of load balancing was achieved.").

- Welch II, Page 3 ("As shown in Figure 2, a subsystem is specified by describing its priority, sets of constituent applications and devices, a set of end-to-end real-time path definitions, and a graph representing the communication connectivity of the applications and devices. The non-terminals of the subsystem grammar are explained in a depth-first manner in the remainder of this section. As seen in the grammar of Figure 2 and the example of Figure 3, the attributes of an application include Boolean variables that indicate whether the application (1) can be replicated for survivability and (2) can support scalability via load sharing among replicas. Indications of whether an application combines its input stream (which may be received from different predecessor applications and/or devices), and splits its output stream (which may be distributed to different successor applications and/or devices) are also specified. Application attributes also include all information necessary to startup and shutdown applications (not elaborated in this paper). The connectivity of the subsystem describes the flow of data and events between the applications and devices of the subsystem, and is described as a sequence of ordered application and/or device pair names within parentheses. Alternately, one may use the square bracket set notation, which is a short hand to represent a complete graph.").

- Hosokawa, 26:4-32 ("If the computer A 101a stops due to a fault or failure in the manner illustrated in FIG. 42B, after the state illustrated in FIG. 42A, the manager 105 starts operating as explained above, and stops the package N 103n, whose priority order is lower than that of the package A 103a, on the computer N 101n, and starts and operates the stopped package A 103a on the computer N 101n. When the computer A 101a recovers and starts-up as illustrated in FIG. 42C, the computer A 101a operates the stopped package N 101n. If the computer B 101b breaks down and stops as illustrated in FIG. 42D, the manager 105 starts operating in the manner explained above, and stops the package N 103n with lower priority, and starts and operates the package B 103b with higher priority on the computer A 101a. If the computer N 101n also breaks down as illustrated in FIG. 42E, the package B 103b stops operating on the computer A 101a, since the package A 103a has higher priority than the package B

103b. Instead, the package A 103a is started-up and operated on the computer A101a. If the computer B 101b recovers, as illustrated in FIG. 42F, the package B 103b with the highest priority of all remaining stopped packages starts-up and operates on the computer B 101b. According to the fourteenth embodiment, it possible to construct a multiplex degenerated system on the cluster, and to perform the most important process by giving it a highest priority, even in case of multiple failures.

- Keshav, 6:30-53 ("FIG. 6 is a flowchart of an embodiment of the process for transferring a virtual server from one physical host to another physical host… Mover 140 directs physical host 160B to access 640 the virtual server 162B state information stored in file system 150. Mover 140 directs physical host 160B to start 650 processes associated with virtual server 162B locally. This enables virtual server 162B to begin running locally in physical host 160B. The user of virtual server 162B is then transferred 660 from physical host 160A to physical host 160B by transferring the virtual server 162B address to the new physical host 160B. As explained previously, the mover 140 may use either "make, then break" timing or "break, then make" timing for the transfer process. Although the invention has been described in considerable detail with reference to certain embodiments, other embodiments are possible. As will be understood by those of skill in the art, the invention may be embodied in other specific forms without departing from the essential characteristics thereof. For example, the dynamic resource configuration module may support different numbers of physical hosts. Additionally, different fitting heuristic methods may be used to select physical hosts for receiving transferred virtual servers during load balancing among the physical hosts.").

- Peacock, Page 29-30 ("These software proxies contain databases that map application types to transmission and service parameters. Requested applications match code representing transmission and service parameters. These parameters can signal the control system to the service and policy needs of that specific host. Hosts transmit an Advanced Internet Protocol Version 6 packet (AIPv6) to a Local active node. The Local Active Node responds to the Host with a variable, stored in the local node's soft-cache, that maps to the sender's IP address. The Host responds to that transmission of the Local Active Node with the variable assigned by the node and the code representing the transmission and service parameters needed for the application.").

And each of the remaining references provided in Exhibit B1-B7 seek ways of preventing loss of application continuity in distributed networks, for example, by managing network resources:

- Shah, 13:20-46 ("NodeSI informs NetSI of communication faults that occur between two nodes. NetSI stores or takes action on the fault based on previous information receive (if any). Each NetSI determines the status of the reporting and problem nodes. If either server is halted, the communication fault report is discarded since the integrity of the data cannot be assured. If neither server is halted, the Communication Fault List is searched for another report on the problem node. If no report on the problem node is found, a Communication Fault List entry is added to the List with the server information. If another report of the problem node is found and another reporting server

> has reported it, the problem server is set up for downgrade processing. Once a decision is made about whether the server should be downgraded, NetSI determines if it should handle it (based on its active state and whether or not the target server is itself.) If it should handle the downgrade, NetSI calls NetPM's Immediate Halt operation to either Auto Halt or Manually Halt the problem node. If the server to be halted is the active PM, NetSI updates the active status accordingly before halting the node. Also, if the target is part of the local site, NetSI informs the Host via ConfigMgr that a status change is occurring and initiates recovery of the Processor service group (through ConfigMgr) if it determines that the Processor service group of the target server should be recovered. NetSI also writes an entry to the network configuration report file indicating the halt is occurring due to a communication fault.”).

Combining the prior art identified in Exhibits B1-B7 with any one of the above exemplary Application Storing References would have amounted to applying a known technique to a known device ready for improvement to yield predictable results. Furthermore, the prior art and exemplary Application Storing References are in the same field of endeavor (*e.g.*, methods and systems for optimizing resource demands in distributed networks) and given the design needs (*e.g.*, improving distributed network optimizing techniques), combined with a finite number of identified, predictable solutions (*e.g.*, expanding beyond existing network distribution and optimization methods), a POSITA would have been motivated to combine the teachings of these references.

Alternatively, each of the references provided in Exhibits B1-B7 alone renders this element obvious, in view of the knowledge and skill of a POSITA. That is, it would have been obvious in the view of one of ordinary skill in the art to add the above limitations to any one or more of the references provided in Exhibits B1-B7. A POSITA would have been motivated to incorporate performing storage allocation and resource management in distributed networks, and such a combination would have been within that person’s skill. As demonstrated in the exemplary Application Storing References listed above, performing storage allocation and resource management were well-known in the art by the time of the Asserted Patent’s claimed invention and thus, adding it to any one or more of the references provided in Exhibits B1-B7 would have

amounted to applying a known technique to a known device ready for improvement to yield predictable results.

C. The ’805 Patent

NAME	DESCRIPTION:					
	The Extracting References	The Storing References	The Steering References	The Driver References	The Semi-Automatic References	The New Trajectory References
Broggi	✓		✓			✓
Huttenlocher	✓					
Brady		✓				
Breed	✓	✓	✓	✓		✓
Behringer			✓		✓	
Laumeyer		✓				
Henderson	✓					
Optimus		✓				
Bertozzi			✓	✓	✓	

1. The Extracting References

The Extracting References are: Broggi, Huttenlocher, Breed, and Henderson. The relevant claims and/or claim elements of the Extracting References are identified below:

Patent	Claim	Claim Language
’805	1[a]	“acquired image data using an imaging sensor from a surrounding field of the motor vehicle”
	1[b]	“extracting from the acquired image data positional parameters of at least one potential destination relative to the motor vehicle”
	1[c]	“calculating at least one trajectory describing an optimized travel path using the positional parameters so as to assist a subsequent vehicle guidance for at least one of the potential destinations”
	1[d]	“performing an edge detection and edge segmentation on the image data so as to break down the image data into a plurality of edge segments and storing interrelationships of the plurality of edge segments in a mathematical tree structure”
	1[e]	“analyzing the plurality of edge segments for the presence of a geometric object associated with a geometrical form that may at least partially describe a potential destination so as to identify one or more potential geometric objects”
	1[f]	“analyzing the one or more potential geometric objects for plausibility using a matching algorithm so as to identify one or more plausible objects”

Patent	Claim	Claim Language
	1[g]	"performing an additional acceptance analysis so as to identify at least one accepted object, the additional acceptance analysis including analyzing a shape of the image formation of each object in the image data based on knowledge of at least one imaging property of the imaging sensor relative to the surrounding field"

To the extent Intellectual Ventures contends that an anticipatory reference in Exhibits C1-C11 fails to disclose these claims and/or claim elements, such reference can be combined with the corresponding disclosures from any one or more of the Extracting References to render it obvious under 35 U.S.C. § 103(a), at least based on Intellectual Ventures' Infringement Contentions, apparent claim constructions, and application of the claims to the Accused Instrumentalities, as best as they can be deciphered.

One of ordinary skill in the art would have been motivated to combine any one or more of the references provided in Exhibits C1-C11 with any one or more of the above exemplary Extracting References to improve the function and utility of the same, and such a combination would have been within that person's skill. For example, each of these Extracting References describe a process for extracting feature information from image data to help guide a motor vehicle along its path while avoiding obstacles:

- Broggi, 166 ("Road Following: the automatic movement of the vehicle inside the lane. It is based on: Lane Detection (which includes the localization of the road, the determination of the relative position between the vehicle and the road, and the analysis of the vehicle's heading direction) and Obstacle Detection (which is mainly based on localizing possible generic obstacles on the vehicle's path). Platooning: The automatic following of the preceding vehicle, that requires the localization and tracking of a target vehicle (Vehicle Detection and Tracking)"), 171 ("Bounding Box Detection: After the localization of the symmetry, the symmetrical region in the edge image is checked for the presence of two corners representing the bottom of the bounding box around the vehicle. A traditional pattern matching technique is used. Moreover, perspective constraints as well as size constraints are used to speed-up the search.").

- Breed, [0413] ("In this manner, a very clear picture or image of the object of interest can be obtained as well as its location and, through the use of a neural network pattern of recognition system, the identity of the object can be ascertained as to whether it is a

sign, a truck, an animal, a person, an automobile or other object. The identification of the object will permit an estimate to be made of the object's mass and thus the severity of any potential collision"), [0586] ("At the time the neural network circuit 63 has learned from a suitable number of patterns of the training data, the result of the training is tested by the test data. In the case where the rate of correct answers of the object identification unit based on this test data is unsatisfactory, the neural network circuit 63 is further trained and the test is repeated. Typically about 200,000 feature patterns are used to train the neural network 63 and determine all of the weights. A similar number is then used for the validation of the developed network. In this simple example chosen, only three outputs are illustrated. These can represent another vehicle, a truck and a pole or tree.").

Further. each of these Extracting References describe a process for specific and detailed method for extracting feature information from image data based on edge detection and edge analysis:

- Huttenlocher, 373 ("The recognition system uses edge-based shape features for matching models against images. The input to the system is a grey-level image. The image is processed by an edge detector [8], and the edges are chained together using an eight-way chaining algorithm.").

- Henderson, 301 ("Edges constitute one of the most useful sorts of information for scene analysis. Even though edge responses usually occur sparsely throughout an image, the output from an edge detector in most image analysis systems is itself an image of the same dimensions (but possibly multichannel) as the original intensity image. Appreciable savings in space and time can be achieved if the full edge descriptions (orientation, radius, and likelihood information) are stored as a 2-D tree.").

And each of the remaining references provided in Exhibits C1-C11 relate to autonomous vehicles determining a path based on image data or methods of analyzing image data acquired (such as from roadways):

- Brady, Abstract ("A machine vision system acquires images from roadway scenes and processes the images by analyzing the intensities of edge elements within the image. The system then applies fuzzy set theory to the location and angles of each pixel after the pixel intensities have been characterized by vectors. A neural network interprets the data created by the fuzzy set operators and classifies objects within the roadway scene. The system can also track objects within the roadway scene, such as vehicle, by forecasting potential track regions and then calculating match scores for each potential track region based on how well the edge elements from the target track regions match those from the source region as weighted by the extent the edge elements have moved.").

- Behringer, 810 ("An important application of computer vision in an autonomous/semiautonomous robotic system is driving a road vehicle on public roads

in normal traffic. An autonomous system based on vision can use the same cues a human uses for driving, without any additional infrastructure being installed. These cues are the lane markings for lane following, other vehicles for longitudinal control, and traffic signs for more complex behavior patterns").

- Laumeyer, 4:40–5:3 ("Thus, based on said differentiable characteristics, or sign-ness, information regarding the type, classification, condition (linked bitmap image portion) and/or location of road signs (and image-portions depicting said road signs) are rapidly extracted from image frames. Those image frames that do not contain an appreciable level of sign-ness are immediately discarded.").

- Optimus, Optimus Design Report at 15 ("The 2003 Optimus team succeeded in their design goals, providing a proven base vehicle for innovative software development. We hope Optimus 2004 will use its enhanced obstacle avoidance and line detecting algorithms to improve upon a successful debut year and make Optimus a top contender in the 12th annual IGVC."), Fig. 3.1.

- Bertozzi, 161 ("ARGO, shown in figure 6.1, is the experimental autonomous vehicle developed at the Dipartimento di Ingegneria dell'Informazione, Universita di Parma, Italy."), 171 ("Once the road geometry ahead of the vehicle has been recovered, a software module is used to compute signals to be issued to the steering wheel actuator. More precisely, starting from the knowledge regarding road geometry and vehicle speed, this module determines the vehicle yaw and computes the position that the vehicle will assume within a given time interval (in the current implementation it is 1.5 s). In case the future vehicle position is not compatible with the requirements (the vehicle should keep central with respect to the driving lane), a rotation is imposed on the steering wheel").

- Gemini, Gemini 2004 Design Report at 15 ("Gemini is a fully autonomous robotic vehicle, designed and manufactured by engineering students at Virginia Tech."), Figs. 1 and 11.

- SciAutonics, 910 ("The SciAutonics vehicles in the DARPA Grand Challenge employ a combination of Lidar and Radar sensors for far look-ahead distance and a suite of ultrasonic and optical sensors for short-range obstacle detection. A pinhole camera is used to detect visual path boundaries. The vehicle is a 4-wheel drive ruggedized All-Terrain-Vehicle (ATV). A differential GPS in conjunction with inertial sensors provides input to the low-level vehicle control to keep the vehicle on course between a series of closely spaced waypoints.").

Combining the prior art identified in Exhibits C1-C11 with any one of the above exemplary Extracting References would have amounted to applying a known technique to a known device ready for improvement to yield predictable results. Furthermore, the prior art and exemplary Extracting References are in the same field of endeavor (*e.g.*, methods and systems for autonomous

driving) and given the design needs (*e.g.*, improving autonomous driving techniques), combined with a finite number of identified, predictable solutions (*e.g.*, expanding beyond existing autonomous driving methods), a POSITA would have been motivated to combine the teachings of these references.

Alternatively, each of the references provided in Exhibits C1-C11 alone renders this element obvious, in view of the knowledge and skill of a POSITA. That is, it would have been obvious in the view of one of ordinary skill in the art to add the above limitations to any one or more of the references provided in Exhibits C1-C11. A POSITA would have been motivated to incorporate analyzing image data with edge detection and edge segmentation and to analyze with matching algorithms to guide the vehicle direction into existing autonomous driving systems, and such a combination would have been within that person's skill. As demonstrated in the exemplary Extracting References listed above, analyzing image data to detect objects and determine paths, such as with neural networks, was well-known in the art by the time of the Asserted Patent's claimed invention and thus, adding it to any one or more of the references provided in Exhibits C1-C11 would have amounted to applying a known technique to a known device ready for improvement to yield predictable results.

2. The Storing References

The Storing References are: Brady, Laumeyer, Breed, and Optimus. The relevant claims and/or claim elements of the Storing References are identified below:

Patent	Claim	Claim Language
'805	1[h]	"storing at least one accepted object that corresponds to a most proximate destination together with corresponding relative positional data in an object list"

To the extent Intellectual Ventures contends that an anticipatory reference in Exhibits C1-C11 fails to disclose these claims and/or claim elements, such reference can be combined with the

corresponding disclosures from any one or more of the Storing References to render it obvious under 35 U.S.C. § 103(a), at least based on Intellectual Ventures' Infringement Contentions, apparent claim constructions, and application of the claims to the Accused Instrumentalities, as best as they can be deciphered.

One of ordinary skill in the art would have been motivated to combine any one or more of the references provided in Exhibits C1-C11 with any one or more of the above exemplary Storing References to improve the function and utility of the same, and such a combination would have been within that person's skill. For example, each of the Storing References describe guiding a motor vehicle by storing data about the detected objects and their positions:

- Brady, 4:32–36 ("After classification, a vehicle can further be tracked. After determining the initial location of the classified vehicle, potential future track points are determined. Inertial history can aid in predicting potential future track points. A match score is then calculated for each potential future track point.").

- Laumeyer, 4:40–53 ("The exemplary embodiment described, enabled, and taught herein is directed to the task of building a database of road signs by type, location, orientation, and condition by processing vast amounts of video image frame data. The image frame data depict roadside scenes as recorded from a vehicle navigating said road."), 12:19–53 ("Once an image (portion of an image frame) has been created and stored in the image list database then the area of the sign is marked in the frame.").

- Optimus, Optimus Design Report at 11–12 ("The Optimus 2003 code contained obstacle mapping code that was used to store locations of previously detected obstacles and place them on a map. This software is now used only as a post-run debugging tool, because people following the vehicles during competition could be falsely mapped as fixed objects if the vehicle makes a quick turn.").

- Breed ("The neural network 63 receives the feature data extracted from the camera images by the video processor feature extractor 61 and uses this data to determine the identification of the object in the image. The neural network 63 has been previously trained on a library of images that can involve as many as one million such images. Fortunately, the images seen from one vehicle are substantially the same as those seen from another vehicle and thus the neural network 63 in general does not need to be trained for each host vehicle type.").

And each of the remaining references provided in Exhibits C1-C11 relate to autonomous vehicles determining a path based on image data or methods of analyzing image data acquired from roadways:

- Broggi, 165 ("ARGO, shown in Fig. 1, is an experimental autonomous vehicle equipped with vision systems and automatic steering capability. It is able to determine its position with respect to the lane, to compute road geometry, to detect generic obstacles on the path, and to localize a leading vehicle. The images acquired by a stereo rig placed behind the windshield are analyzed in real-time by the computing system located in the boot. The results of the processing are used to drive an actuator mounted onto the steering wheel and other driving assistance devices").

- Behringer, 810 ("An important application of computer vision in an autonomous/semiautonomous robotic system is driving a road vehicle on public roads in normal traffic. An autonomous system based on vision can use the same cues a human uses for driving, without any additional infrastructure being installed. These cues are the lane markings for lane following, other vehicles for longitudinal control, and traffic signs for more complex behavior patterns").

- Bertozzi, 161 ("ARGO, shown in figure 6.1, is the experimental autonomous vehicle developed at the Dipartimento di Ingegneria dell'Informazione, Universita di Parma, Italy."), 171 ("Once the road geometry ahead of the vehicle has been recovered, a software module is used to compute signals to be issued to the steering wheel actuator. More precisely, starting from the knowledge regarding road geometry and vehicle speed, this module determines the vehicle yaw and computes the position that the vehicle will assume within a given time interval (in the current implementation it is 1.5 s). In case the future vehicle position is not compatible with the requirements (the vehicle should keep central with respect to the driving lane), a rotation is imposed on the steering wheel").

- Gemini, Gemini 2004 Design Report at 15 ("Gemini is a fully autonomous robotic vehicle, designed and manufactured by engineering students at Virginia Tech."), Figs. 1 and 11.

- SciAutonics, 910 ("The SciAutonics vehicles in the DARPA Grand Challenge employ a combination of Lidar and Radar sensors for far look-ahead distance and a suite of ultrasonic and optical sensors for short-range obstacle detection. A pinhole camera is used to detect visual path boundaries. The vehicle is a 4-wheel drive ruggedized All-Terrain-Vehicle (ATV). A differential GPS in conjunction with inertial sensors provides input to the low-level vehicle control to keep the vehicle on course between a series of closely spaced waypoints.").

- Huttenlocher, 373 ("The recognition system uses edge-based shape features for matching models against images. The input to the system is a grey-level image. The

image is processed by an edge detector [8], and the edges are chained together using an eight-way chaining algorithm.”).

- Henderson, 301 (“Edges constitute one of the most useful sorts of information for scene analysis. Even though edge responses usually occur sparsely throughout an image, the output from an edge detector in most image analysis systems is itself an image of the same dimensions (but possibly multichannel) as the original intensity image. Appreciable savings in space and time can be achieved if the full edge descriptions (orientation, radius, and likelihood information) are stored as a 2-D tree.”).

Combining the prior art identified in Exhibits C1-C11 with any one of the above exemplary Storing References would have amounted to applying a known technique to a known device ready for improvement to yield predictable results. Furthermore, the prior art and exemplary Storing References are in the same field of endeavor (*e.g.*, methods and systems for storing driving data) and given the design needs (*e.g.*, improving autonomous driving techniques), combined with a finite number of identified, predictable solutions (*e.g.*, expanding beyond existing autonomous driving methods), a POSITA would have been motivated to combine the teachings of these references.

Alternatively, each of the references provided in Exhibits C1-C11 alone renders this element obvious, in view of the knowledge and skill of a POSITA. That is, it would have been obvious in the view of one of ordinary skill in the art to add the above limitations to any one or more of the references provided in Exhibits C1-C11. A POSITA would have been motivated to incorporate storing the detected image data from surround the vehicle into existing autonomous vehicle systems, and such a combination would have been within that person’s skill. As demonstrated in the exemplary Storing References listed above, storing driving data of detected objects from cameras mounted to vehicles was well-known in the art by the time of the Asserted Patent’s claimed invention and thus, adding it to any one or more of the references provided in Exhibits C1-C11 would have amounted to applying a known technique to a known device ready for improvement to yield predictable results.

3. The Steering References

The Steering References are: Broggi, Breed, Behringer, and Bertozzi. The relevant claims and/or claim elements of the Steering References are identified below:

Patent	Claim	Claim Language
’805	6	“The method as recited in claim 1, wherein the calculation of the at least one trajectory includes considering a steering property and a capability of the motor vehicle.”
’805	7	“The method as recited in claim 6, further comprising rejecting a potential destination that is not reachable given the steering property and capability of the motor vehicle.”

To the extent Intellectual Ventures contends that an anticipatory reference in Exhibits C1-C11 fails to disclose these claims and/or claim elements, such reference can be combined with the corresponding disclosures from any one or more of the Steering References to render it obvious under 35 U.S.C. § 103(a), at least based on Intellectual Ventures’ Infringement Contentions, apparent claim constructions, and application of the claims to the Accused Instrumentalities, as best as they can be deciphered.

One of ordinary skill in the art would have been motivated to combine any one or more of the references provided in Exhibits C1-C11 with any one or more of the above exemplary Steering References to improve the function and utility of the same, and such a combination would have been within that person’s skill. For example, each of the Steering References describe guiding a motor vehicle by controlling the steering and speed capabilities of the vehicle including by changing the steering and speed to stay on the desired path or avoid obstacles:

- Broggi, 165 (“The images acquired by a stereo rig placed behind the windshield are analyzed in real-time by the computing system located in the boot. The results of the processing are used to drive an actuator mounted onto the steering wheel and other driving assistance devices.”).
- Breed, [0250] (“In a preferred embodiment, neural fuzzy control algorithms are used to develop coordinated braking, acceleration and steering control signals to control individual vehicles, or the individual wheels of such vehicles, in an optimal manner to

avoid or minimize the effects of potential collisions."), [0315] ("One way to imagine the system operation is to consider each car and roadway edge to behave as if it had a surrounding 'force field' that would prevent it from crashing into another vehicle or an obstacle along the roadway. A vehicle operator would be prevented from causing his or her vehicle to leave its assigned corridor. This is accomplished with a control system that controls the steering, acceleration and perhaps the vehicle brakes based on its knowledge of the location of the vehicle, highway boundaries and other nearby vehicles.").

- Behringer, 811 ("To achieve a consistent model for the road following task it is necessary to include a model of the vehicle's dynamical behavior. Here, a simple single-track model is applied containing the state variables: lateral offset from lane center, yaw angle, and slip angle [20]. During the turn-off procedure, yaw angle rate and steering angle are additional state variables.").

- Bertozzi, 171 ("Once the road geometry ahead of the vehicle has been recovered, a software module is used to compute signals to be issued to the steering wheel actuator. More precisely, starting from the knowledge regarding road geometry and vehicle speed, this module determines the vehicle yaw and computes the position that the vehicle will assume within a given time interval (in the current implementation it is 1.5 s). . . . To keep the control system simple, the steering wheel rotation is computed as the result of a temporal average amongst a set of values proportional to the offsets between the future position and the lane center in successive time instants").

And each of the remaining references provided in Exhibits C1-C11 relate to autonomous vehicles determining a path based on image data or methods of analyzing image data acquired (such as from roadways):

- Brady, Abstract ("A machine vision system acquires images from roadway scenes and processes the images by analyzing the intensities of edge elements within the image. The system then applies fuzzy set theory to the location and angles of each pixel after the pixel intensities have been characterized by vectors. A neural network interprets the data created by the fuzzy set operators and classifies objects within the roadway scene. The system can also track objects within the roadway scene, such as vehicle, by forecasting potential track regions and then calculating match scores for each potential track region based on how well the edge elements from the target track regions match those from the source region as weighted by the extent the edge elements have moved.").

- Laumeyer, 4:40–5:3 ("Thus, based on said differentiable characteristics, or sign-ness, information regarding the type, classification, condition (linked bitmap image portion) and/or location of road signs (and image-portions depicting said road signs) are rapidly extracted from image frames. Those image frames that do not contain an appreciable level of sign-ness are immediately discarded.").

- Optimus, Optimus Design Report at 15 ("The 2003 Optimus team succeeded in their design goals, providing a proven base vehicle for innovative software development. We hope Optimus 2004 will use its enhanced obstacle avoidance and line detecting algorithms to improve upon a successful debut year and make Optimus a top contender in the 12th annual IGVC."), Fig. 3.1.

- Gemini, Gemini 2004 Design Report at 15 ("Gemini is a fully autonomous robotic vehicle, designed and manufactured by engineering students at Virginia Tech."), Figs. 1 and 11.

- SciAutonics, 910 ("The SciAutonics vehicles in the DARPA Grand Challenge employ a combination of Lidar and Radar sensors for far look-ahead distance and a suite of ultrasonic and optical sensors for short-range obstacle detection. A pinhole camera is used to detect visual path boundaries. The vehicle is a 4-wheel drive ruggedized All-Terrain-Vehicle (ATV). A differential GPS in conjunction with inertial sensors provides input to the low-level vehicle control to keep the vehicle on course between a series of closely spaced waypoints.")

- Huttenlocher, 373 ("The recognition system uses edge-based shape features for matching models against images. The input to the system is a grey-level image. The image is processed by an edge detector [8], and the edges are chained together using an eight-way chaining algorithm.").

- Henderson, 301 ("Edges constitute one of the most useful sorts of information for scene analysis. Even though edge responses usually occur sparsely throughout an image, the output from an edge detector in most image analysis systems is itself an image of the same dimensions (but possibly multichannel) as the original intensity image. Appreciable savings in space and time can be achieved if the full edge descriptions (orientation, radius, and likelihood information) are stored as a 2-D tree.").

Combining the prior art identified in Exhibits C1-C11 with any one of the above exemplary Steering References would have amounted to applying a known technique to a known device ready for improvement to yield predictable results. Furthermore, the prior art and exemplary Steering References are in the same field of endeavor (*e.g.*, methods and systems for autonomous driving) and given the design needs (*e.g.*, improving autonomous driving techniques), combined with a finite number of identified, predictable solutions (*e.g.*, expanding beyond existing autonomous driving methods), a POSITA would have been motivated to combine the teachings of these references.

Alternatively, each of the references provided in Exhibits C1-C11 alone renders this element obvious, in view of the knowledge and skill of a POSITA. That is, it would have been obvious in the view of one of ordinary skill in the art to add the above limitations to any one or more of the references provided in Exhibits C1-C11. A POSITA would have been motivated to incorporate considering the steering properties of the vehicle in determining the path of the vehicle into existing autonomous driving systems, and such a combination would have been within that person's skill. As demonstrated in the exemplary Steering References listed above, considering the steering properties of vehicle for autonomous driving algorithms was well-known in the art by the time of the Asserted Patent's claimed invention and thus, adding it to any one or more of the references provided in Exhibits C1-C11 would have amounted to applying a known technique to a known device ready for improvement to yield predictable results.

4. The Driver References

The Driver References are: Breed and Bertozzi. The relevant claims and/or claim elements of the Driver References are identified below:

Patent	Claim	Claim Language
'805	8	"The method as recited in claim 1, further comprising informing a driver of the motor vehicle about a position of at least one potential destination and about the at least one trajectory."
'805	10	"The method as recited in claim 9, further comprising using at least one of an audible and a visual signaling during the vehicle guidance to assist a driver of the vehicle in observing the trajectory."

To the extent Intellectual Ventures contends that an anticipatory reference in Exhibits C1-C11 fails to disclose these claims and/or claim elements, such reference can be combined with the corresponding disclosures from any one or more of the Driver References to render it obvious under 35 U.S.C. § 103(a), at least based on Intellectual Ventures' Infringement Contentions,

apparent claim constructions, and application of the claims to the Accused Instrumentalities, as best as they can be deciphered.

One of ordinary skill in the art would have been motivated to combine any one or more of the references provided in Exhibits C1-C11 with any one or more of the above exemplary Driver References to improve the function and utility of the same, and such a combination would have been within that person's skill. For example, each of the Driver References describe a method of controlling a vehicle where the system notifies the driver of the desired path or detected obstacles:

- Breed, [0414] ("Once a pending collision is identified, this information can be made available to the driver and if the driver ceases to heed the warning, control of the vehicle could be taken from him or her by the system."), [0189] ("Additionally, a sensor for obtaining input on the color of an approaching stoplight is preferably provided in which case, the processor additionally considers the vehicle being about to run a red stoplight as a potential crash situation. The warning system may be an alarm, a light, a buzzer audible noise and/or a simulated rumble strip.").

- Bertozzi, 168 ("A pair of stereo loudspeakers are used to issue warnings to the driver in case dangerous conditions are detected, e. g. when the distance from the leading vehicle is under a safety threshold or when the vehicle position within the lane is unsafe. The possibility of using the loudspeakers individually is exploited in order to enhance the effectiveness of the acoustical messages. The driver can choose amongst several kinds of acoustic signals: chimes only, vocal messages in different languages (Italian or English) and with a different information content.").

And each of the remaining references provided in Exhibits C1-C11 relate to autonomous vehicles determining a path based on image data or methods of analyzing image data acquired (such as from roadways):

- Broggi, 165 ("ARGO, shown in Fig. 1, is an experimental autonomous vehicle equipped with vision systems and automatic steering capability. It is able to determine its position with respect to the lane, to compute road geometry, to detect generic obstacles on the path, and to localize a leading vehicle. The images acquired by a stereo rig placed behind the windshield are analyzed in real-time by the computing system located in the boot. The results of the processing are used to drive an actuator mounted onto the steering wheel and other driving assistance devices").

- Brady, Abstract ("A machine vision system acquires images from roadway scenes and processes the images by analyzing the intensities of edge elements within the image. The system then applies fuzzy set theory to the location and angles of each pixel after

the pixel intensities have been characterized by vectors. A neural network interprets the data created by the fuzzy set operators and classifies objects within the roadway scene. The system can also track objects within the roadway scene, such as vehicle, by forecasting potential track regions and then calculating match scores for each potential track region based on how well the edge elements from the target track regions match those from the source region as weighted by the extent the edge elements have moved.”).

- Behringer, 810 (“An important application of computer vision in an autonomous/semiautonomous robotic system is driving a road vehicle on public roads in normal traffic. An autonomous system based on vision can use the same cues a human uses for driving, without any additional infrastructure being installed. These cues are the lane markings for lane following, other vehicles for longitudinal control, and traffic signs for more complex behavior patterns”).

- Laumeyer, 4:40–5:3 (“Thus, based on said differentiable characteristics, or sign-ness, information regarding the type, classification, condition (linked bitmap image portion) and/or location of road signs (and image-portions depicting said road signs) are rapidly extracted from image frames. Those image frames that do not contain an appreciable level of sign-ness are immediately discarded.”).

- Optimus, Optimus Design Report at 15 (“The 2003 Optimus team succeeded in their design goals, providing a proven base vehicle for innovative software development. We hope Optimus 2004 will use its enhanced obstacle avoidance and line detecting algorithms to improve upon a successful debut year and make Optimus a top contender in the 12th annual IGVC.”), Fig. 3.1.

- Gemini, Gemini 2004 Design Report at 15 (“Gemini is a fully autonomous robotic vehicle, designed and manufactured by engineering students at Virginia Tech.”), Figs. 1 and 11.

- SciAutonics, 910 (“The SciAutonics vehicles in the DARPA Grand Challenge employ a combination of Lidar and Radar sensors for far look-ahead distance and a suite of ultrasonic and optical sensors for short-range obstacle detection. A pinhole camera is used to detect visual path boundaries. The vehicle is a 4-wheel drive ruggedized All-Terrain-Vehicle (ATV). A differential GPS in conjunction with inertial sensors provides input to the low-level vehicle control to keep the vehicle on course between a series of closely spaced waypoints.”).

- Huttenlocher, 373 (“The recognition system uses edge-based shape features for matching models against images. The input to the system is a grey-level image. The image is processed by an edge detector [8], and the edges are chained together using an eight-way chaining algorithm.”).

- Henderson, 301 (“Edges constitute one of the most useful sorts of information for scene analysis. Even though edge responses usually occur sparsely throughout an image, the output from an edge detector in most image analysis systems is itself an image of the

> same dimensions (but possibly multichannel) as the original intensity image. Appreciable savings in space and time can be achieved if the full edge descriptions (orientation, radius, and likelihood information) are stored as a 2-D tree.”).

Combining the prior art identified in Exhibits C1-C11 with any one of the above exemplary Driver References would have amounted to applying a known technique to a known device ready for improvement to yield predictable results. Furthermore, the prior art and exemplary Driver References are in the same field of endeavor (*e.g.*, methods and systems for autonomous driving) and given the design needs (*e.g.*, improving autonomous driving techniques), combined with a finite number of identified, predictable solutions (*e.g.*, expanding beyond existing autonomous driving methods), a POSITA would have been motivated to combine the teachings of these references.

Alternatively, each of the references provided in Exhibits C1-C11 alone renders this element obvious, in view of the knowledge and skill of a POSITA. That is, it would have been obvious in the view of one of ordinary skill in the art to add the above limitations to any one or more of the references provided in Exhibits C1-C11. A POSITA would have been motivated to incorporate alerting the driver of the desired path into existing autonomous driving systems, including semi-autonomous systems, and such a combination would have been within that person’s skill. As demonstrated in the exemplary Driver References listed above, alerting drivers of obstacles or danger in the desired path in autonomous driving systems was well-known in the art by the time of the Asserted Patent’s claimed invention and thus, adding it to any one or more of the references provided in Exhibits C1-C11 would have amounted to applying a known technique to a known device ready for improvement to yield predictable results.

5. The Semi-Automatic References

The Semi-Automatic References are: Behringer and Bertozzi. The relevant claims and/or claim elements of the Semi-Automatic References are identified below:

Patent	Claim	Claim Language
’805	9	“The method as recited in claim 1, further comprising performing an at least semi-automatic vehicle guidance to the most proximate destination using the at least one trajectory.”

To the extent Intellectual Ventures contends that an anticipatory reference in Exhibits C1-C11 fails to disclose these claims and/or claim elements, such reference can be combined with the corresponding disclosures from any one or more of the Semi-Automatic References to render it obvious under 35 U.S.C. § 103(a), at least based on Intellectual Ventures’ Infringement Contentions, apparent claim constructions, and application of the claims to the Accused Instrumentalities, as best as they can be deciphered.

One of ordinary skill in the art would have been motivated to combine any one or more of the references provided in Exhibits C1-C11 with any one or more of the above exemplary Semi-Automatic References to improve the function and utility of the same, and such a combination would have been within that person’s skill. For example, each of the Semi-Automatic References describe a method of controlling a vehicle along a path to a destination through autonomous or semi-autonomous control:

- Behringer, 810 (“An important application of computer vision in an autonomous/semiautonomous robotic system is driving a road vehicle on public roads in normal traffic. An autonomous system based on vision can use the same cues a human uses for driving, without any additional infrastructure being installed.”).

- Bertozzi, 174 (“The following three functionalities are now integrated. Manual Driving: the system monitors the driver's activity; in case of potential dangerous situations the system warns the driver with acoustic and optical signals. Supervised Driving: in case of dangerous situations, the system takes control of the vehicle in order to keep it in a safe position. Automatic Driving: the system drives automatically, following the lane and localizing obstacles on its path; moreover, it is able to perform lane changes.”).

And each of the remaining references provided in Exhibits C1-C11 relate to autonomous vehicles determining a path based on image data or methods of analyzing image data acquired (such as from roadways):

- Broggi, 165 ("ARGO, shown in Fig. 1, is an experimental autonomous vehicle equipped with vision systems and automatic steering capability. It is able to determine its position with respect to the lane, to compute road geometry, to detect generic obstacles on the path, and to localize a leading vehicle. The images acquired by a stereo rig placed behind the windshield are analyzed in real-time by the computing system located in the boot. The results of the processing are used to drive an actuator mounted onto the steering wheel and other driving assistance devices").

- Brady, Abstract ("A machine vision system acquires images from roadway scenes and processes the images by analyzing the intensities of edge elements within the image. The system then applies fuzzy set theory to the location and angles of each pixel after the pixel intensities have been characterized by vectors. A neural network interprets the data created by the fuzzy set operators and classifies objects within the roadway scene. The system can also track objects within the roadway scene, such as vehicle, by forecasting potential track regions and then calculating match scores for each potential track region based on how well the edge elements from the target track regions match those from the source region as weighted by the extent the edge elements have moved.").

- Breed, Abstract ("Control system and method for controlling a vehicle or a component of a vehicle in which an inertial reference unit includes accelerometers and gyroscopes which provide data on vehicle motion and a processor processes the data and controls the vehicle or the component of the vehicle based thereon."), [0006] ("The present invention still further relates to the use of neural networks and neural-fuzzy rule sets for recognizing and categorizing obstacles and generating and developing optimal avoidance maneuvers where necessary").

- Laumeyer, 4:40–5:3 ("Thus, based on said differentiable characteristics, or sign-ness, information regarding the type, classification, condition (linked bitmap image portion) and/or location of road signs (and image-portions depicting said road signs) are rapidly extracted from image frames. Those image frames that do not contain an appreciable level of sign-ness are immediately discarded.").

- Optimus, Optimus Design Report at 15 ("The 2003 Optimus team succeeded in their design goals, providing a proven base vehicle for innovative software development. We hope Optimus 2004 will use its enhanced obstacle avoidance and line detecting algorithms to improve upon a successful debut year and make Optimus a top contender in the 12th annual IGVC."), Fig. 3.1.

- Gemini, Gemini 2004 Design Report at 15 ("Gemini is a fully autonomous robotic vehicle, designed and manufactured by engineering students at Virginia Tech."), Figs. 1 and 11.

- SciAutonics, 910 ("The SciAutonics vehicles in the DARPA Grand Challenge employ a combination of Lidar and Radar sensors for far look-ahead distance and a suite of ultrasonic and optical sensors for short-range obstacle detection. A pinhole camera is used to detect visual path boundaries. The vehicle is a 4-wheel drive ruggedized All-Terrain-Vehicle (ATV). A differential GPS in conjunction with inertial sensors provides input to the low-level vehicle control to keep the vehicle on course between a series of closely spaced waypoints.").

- Huttenlocher, 373 ("The recognition system uses edge-based shape features for matching models against images. The input to the system is a grey-level image. The image is processed by an edge detector [8], and the edges are chained together using an eight-way chaining algorithm.").

- Henderson, 301 ("Edges constitute one of the most useful sorts of information for scene analysis. Even though edge responses usually occur sparsely throughout an image, the output from an edge detector in most image analysis systems is itself an image of the same dimensions (but possibly multichannel) as the original intensity image. Appreciable savings in space and time can be achieved if the full edge descriptions (orientation, radius, and likelihood information) are stored as a 2-D tree.").

Combining the prior art identified in Exhibits C1-C11 with any one of the above exemplary Semi-Automatic References would have amounted to applying a known technique to a known device ready for improvement to yield predictable results. Furthermore, the prior art and exemplary Semi-Automatic References are in the same field of endeavor (*e.g.*, methods and systems for autonomous driving) and given the design needs (*e.g.*, improving autonomous driving techniques), combined with a finite number of identified, predictable solutions (*e.g.*, expanding beyond existing autonomous driving methods), a POSITA would have been motivated to combine the teachings of these references.

Alternatively, each of the references provided in Exhibits C1-C11 alone renders this element obvious, in view of the knowledge and skill of a POSITA. That is, it would have been obvious in the view of one of ordinary skill in the art to add the above limitations to any one or more of the references provided in Exhibits C1-C11. A POSITA would have been motivated to

incorporate semiautomatic driving into existing autonomous vehicle systems, and such a combination would have been within that person's skill. As demonstrated in the exemplary Semi-Automatic References listed above, semiautonomous driving was well-known in the art by the time of the Asserted Patent's claimed invention and thus, adding it to any one or more of the references provided in Exhibits C1-C11 would have amounted to applying a known technique to a known device ready for improvement to yield predictable results.

6. The New Trajectory References

The New Trajectory References are: Broggi, and Breed. The relevant claims and/or claim elements of the New Trajectory References are identified below:

Patent	Claim	Claim Language
'805	11[a]	"continuously monitoring a position of the stored at least one accepted object during the vehicle guidance"
	11[b]	"selecting a new most proximate destination went the most proximate destination is no longer easily reachable, wherein the new most proximate destination is selected based on an active position of the motor vehicle and in determining the at least one accepted object that is best reachable, considering a steering properties and a capability of the vehicle"
	11[c]	"computing a new trajectory describing a new optimized travel path based on the active position"

To the extent Intellectual Ventures contends that an anticipatory reference in Exhibits C1-C11 fails to disclose these claims and/or claim elements, such reference can be combined with the corresponding disclosures from any one or more of the New Trajectory References to render it obvious under 35 U.S.C. § 103(a), at least based on Intellectual Ventures' Infringement Contentions, apparent claim constructions, and application of the claims to the Accused Instrumentalities, as best as they can be deciphered.

One of ordinary skill in the art would have been motivated to combine any one or more of the references provided in Exhibits C1-C11 with any one or more of the above exemplary New

Trajectory References to improve the function and utility of the same, and such a combination would have been within that person's skill. For example, each of the New Trajectory References describe a method of autonomous driving where the vehicle continuously monitors its surroundings and changes its path based on detected obstacles in its intended path:

- Broggi, 171–172 ("Backtracking: Sometimes it may happen that in correspondence to the symmetry maximum no correct bounding boxes exist. Therefore, a backtracking approach is used: the symmetry map is again scanned for the next local maximum and a new search for a bounding box is performed.").

- Breed, [0169] ("Provides sensors to continuously HT calculate the lateral distance to the curb, front and rear, in order to park the vehicle in a precise location."), [0321] ("To prevent accidents caused by a vehicle leaving the road surface and impacting a roadside obstacle requires only an accurate knowledge of the position of the vehicle and the road boundaries. To prevent collisions with other vehicles requires that the position of all nearby automobiles must be updated continuously.").

And each of the remaining references provided in Exhibits C1-C11 relate to autonomous vehicles determining a path based on image data or methods of analyzing image data acquired (such as from roadways):

- Brady, Abstract ("A machine vision system acquires images from roadway scenes and processes the images by analyzing the intensities of edge elements within the image. The system then applies fuzzy set theory to the location and angles of each pixel after the pixel intensities have been characterized by vectors. A neural network interprets the data created by the fuzzy set operators and classifies objects within the roadway scene. The system can also track objects within the roadway scene, such as vehicle, by forecasting potential track regions and then calculating match scores for each potential track region based on how well the edge elements from the target track regions match those from the source region as weighted by the extent the edge elements have moved.").

- Behringer, 810 ("An important application of computer vision in an autonomous/semiautonomous robotic system is driving a road vehicle on public roads in normal traffic. An autonomous system based on vision can use the same cues a human uses for driving, without any additional infrastructure being installed. These cues are the lane markings for lane following, other vehicles for longitudinal control, and traffic signs for more complex behavior patterns").

- Laumeyer, 4:40–5:3 ("Thus, based on said differentiable characteristics, or sign-ness, information regarding the type, classification, condition (linked bitmap image portion) and/or location of road signs (and image-portions depicting said road signs) are rapidly

extracted from image frames. Those image frames that do not contain an appreciable level of sign-ness are immediately discarded.”).

- Optimus, Optimus Design Report at 15 (“The 2003 Optimus team succeeded in their design goals, providing a proven base vehicle for innovative software development. We hope Optimus 2004 will use its enhanced obstacle avoidance and line detecting algorithms to improve upon a successful debut year and make Optimus a top contender in the 12th annual IGVC.”), Fig. 3.1.

- Bertozzi, 161 (“ARGO, shown in figure 6.1, is the experimental autonomous vehicle developed at the Dipartimento di Ingegneria dell'Informazione, Universita di Parma, Italy.”), 171 (“Once the road geometry ahead of the vehicle has been recovered, a software module is used to compute signals to be issued to the steering wheel actuator. More precisely, starting from the knowledge regarding road geometry and vehicle speed, this module determines the vehicle yaw and computes the position that the vehicle will assume within a given time interval (in the current implementation it is 1.5 s). In case the future vehicle position is not compatible with the requirements (the vehicle should keep central with respect to the driving lane), a rotation is imposed on the steering wheel”).

- Gemini, Gemini 2004 Design Report at 15 (“Gemini is a fully autonomous robotic vehicle, designed and manufactured by engineering students at Virginia Tech.”), Figs. 1 and 11.

- SciAutonics, 910 (“The SciAutonics vehicles in the DARPA Grand Challenge employ a combination of Lidar and Radar sensors for far look-ahead distance and a suite of ultrasonic and optical sensors for short-range obstacle detection. A pinhole camera is used to detect visual path boundaries. The vehicle is a 4-wheel drive ruggedized All-Terrain-Vehicle (ATV). A differential GPS in conjunction with inertial sensors provides input to the low-level vehicle control to keep the vehicle on course between a series of closely spaced waypoints.”).

- Huttenlocher, 373 (“The recognition system uses edge-based shape features for matching models against images. The input to the system is a grey-level image. The image is processed by an edge detector [8], and the edges are chained together using an eight-way chaining algorithm.”).

- Henderson, 301 (“Edges constitute one of the most useful sorts of information for scene analysis. Even though edge responses usually occur sparsely throughout an image, the output from an edge detector in most image analysis systems is itself an image of the same dimensions (but possibly multichannel) as the original intensity image. Appreciable savings in space and time can be achieved if the full edge descriptions (orientation, radius, and likelihood information) are stored as a 2-D tree.”).

Combining the prior art identified in Exhibits C1-C11 with any one of the above exemplary New Trajectory References would have amounted to applying a known technique to a known

device ready for improvement to yield predictable results. Furthermore, the prior art and exemplary New Trajectory References are in the same field of endeavor (*e.g.*, methods and systems for autonomous driving) and given the design needs (*e.g.*, improving autonomous driving techniques), combined with a finite number of identified, predictable solutions (*e.g.*, expanding beyond existing autonomous driving methods), a POSITA would have been motivated to combine the teachings of these references.

Alternatively, each of the references provided in Exhibits C1-C11 alone renders this element obvious, in view of the knowledge and skill of a POSITA. That is, it would have been obvious in the view of one of ordinary skill in the art to add the above limitations to any one or more of the references provided in Exhibits C1-C11. A POSITA would have been motivated to incorporate continuous monitoring and revaluation of routes into existing autonomous driving systems, and such a combination would have been within that person's skill. As demonstrated in the exemplary New Trajectory References listed above, evaluating the route and changing course based on detected obstacles was well-known in the art by the time of the Asserted Patent's claimed invention and thus, adding it to any one or more of the references provided in Exhibits C1-C11 would have amounted to applying a known technique to a known device ready for improvement to yield predictable results.

D. The '180 Patent

NAME	DESCRIPTION:			
	The Configuring References	The Controlling References	The Combining Data References	The Third and Fourth FOV References
Matsushima	✓	✓	✓	
Stanford Array/Wilburn	✓	✓	✓	
UltraCam	✓		✓	
Choi			✓	
Labaziewicz	✓			✓
Yu		✓	✓	

Behringer	✓		✓	

1. The Configuring References

The Configuring References are: Matsushima, Stanford Array/Wilburn, UltraCam, Labaziewicz, and Behringer. The relevant claims and/or claim elements of the Configuring References are identified below:

Patent	Claim	Claim Language
’180	22[a]	“configuring a first optics component relative to a first image sensor to form a first channel having a first field of view (FOV) that comprises a first angular width of a scene”
’180	22[b]	“configuring a second optics component relative to a second image sensor to form a second channel having a second FOV that comprises a second angular width of the scene, wherein the first and second angular widths are different”

To the extent Intellectual Ventures contends that an anticipatory reference in ExhibitsD1-D7 fails to disclose these claims and/or claim elements, such reference can be combined with the corresponding disclosures from any one or more of the Configuring References to render it obvious under 35 U.S.C. § 103(a), at least based on Intellectual Ventures’ Infringement Contentions, apparent claim constructions, and application of the claims to the Accused Instrumentalities, as best as they can be deciphered.

One of ordinary skill in the art would have been motivated to combine any one or more of the references provided in Exhibits D1-D7 with any one or more of the above exemplary Configuring References to improve the function and utility of the same, and such a combination would have been within that person’s skill. For example, each of the Configuring References describe a camera with two optics components where the field of view for each optics component has a different angular width:

- Matsushima, [0009] (“The present invention has two imaging systems, and each imaging system has an image sensor and a lens for forming an image of the subject on the image sensor. For example, the second lens can be a telephoto lens with a focal

length that is longer than that of the first lens, and the first lens can be a wide-angle lens. In other words, the two imaging systems can be used to obtain images with shooting angles.")

- Stanford Camera Array, Wilburn ("Figure 2 shows one of our camera tiles. For indoor applications, one typically wants a large working volume and a large depth of field. For these reasons, we use Sunex DSL841B lenses with a 6.1mm focal length, an F/# of 2.6, and relatively wide diagonal field of view of 57 [degrees]. For applications that require a narrow field of view (usually outdoors), we use Marshall Electronics V-4350-2.5 lenses with a 50mm fixed focal length, an F/# of 2.5, and a diagonal field of view of 6 [degrees].")

- UltraCam, UltraCam Brochure at 3 (describing different focal lengths and fields of view for each lens in the camera)

- Labaziewicz, Abstract ("A digital camera includes a first image sensor, a first wide angle lens for forming a first image of a scene on the first image sensor; a second image sensor, a zoom lens for forming a second image of the same scene on the second image sensor, a control element for selecting either a first sensor output from the first image sensor or a second sensor output from the second image sensor, and a processing section for producing the output image from the selected sensor output. In one variation of this embodiment, the first lens is also a zoom lens, where the maximum focal length of the first lens is less than or equal to the minimum focal length of the second zoom lens.")

- Behringer, 811 ("Two b/w CCD cameras (1/2 in) with a wide angle (f = 8 mm) and a tele lens (f = 24 mm) are connected to transputer frame grabbers. Evaluation of the images is performed by the transputer based image processing module KRONOS, which can detect gray scale edges by application of correlation techniques. By integration of both camera images into bifocal vision, a look-ahead range from 5–80 m is covered. The cameras are mounted on a stabilized platform for gaze control. Pan and tilt can be controlled, depending on the point of interest.")

And each of the remaining references provided in Exhibits D1-D7 seek ways of improving image capture techniques by, for example, combing data from multiple image sensors to form an image:

- Choi, [0003] ("The present invention relates generally to an image photographing device and method. In particular, the present invention relates to an image photographing device and method for combining images with different focal lengths to an in-focus image in a digital camera used for a portable terminal."), [0019]-[0021] ("According to another aspect of the present invention, in an image photographing method for combining images with different focal lengths to an in-focus image, the images are captured at different focal lengths simultaneously, each of the images is segmented into a predetermined number of blocks, in-focus blocks are marked in the images, and images represented by the in-focus blocks are combined into a final combined image."), [0050] ("Referring to FIG. 3, the image combination processor 200

comprises a block matrix unit 210 for detecting high frequency components and generating an initial block matrix, a filter unit 220 for generating a final block matrix by filtering a predetermined block value in the initial block matrix, and an image combiner 230 for stitching the final block matrix into the background image 111.")

- Yu, 2:25-35 ("Under the constraints of improving image qualities without incurring substantial costs to the digital cameras, the present invention discloses improved digital cameras that use multiple image sensors with multiple lenses."), 7:46-59 ("Referring to FIG. 5, there is illustrated a virtual color image 500 formed by combining four intensity images 502, 504, 506 and 508. From virtual color image 500, a color or vector image 520 can be derived. Four intensity images 502, 504, 506 and 508 correspond respectively to four intensity images from four image sensors 302, 304, 306 and 308 of FIG. 3. As the name indicates, virtual color image 500 is not actually formed to occupy an image memory but is for illustrative purpose. Since four intensity images 502, 504, 506 and 508 are typically kept in a memory such as 360 of FIG. 3 after being digitized, color image 520 can be derived from virtual color image 500 that utilizes all data in intensity images 502, 504, 506 and 508")

Combining the prior art identified in Exhibits D1-D7 with any one of the above exemplary Configuring References would have amounted to applying a known technique to a known device ready for improvement to yield predictable results. Furthermore, the prior art and exemplary Configuring References are in the same field of endeavor (*e.g.*, cameras) and given the design needs (*e.g.*, improving image capturing techniques), combined with a finite number of identified, predictable solutions (*e.g.*, expanding imaging field of view methods), a POSITA would have been motivated to combine the teachings of these references.

Alternatively, each of the references provided in Exhibits D1-D7 alone renders this element obvious, in view of the knowledge and skill of a POSITA. That is, it would have been obvious in the view of one of ordinary skill in the art to add the above limitations to any one or more of the references provided in Exhibits D1-D7. A POSITA would have been motivated to incorporate expanding the field of view by using two different lenses into existing cameras, and such a combination would have been within that person's skill. As demonstrated in the exemplary Configuring References listed above, a system with multiple cameras, each having a different field of view, was well-known in the art by the time of the Asserted Patents' claimed invention and thus,

adding it to any one or more of the references provided in Exhibits D1-D7 would have amounted to applying a known technique to a known device ready for improvement to yield predictable results.

2. The Controlling References

The Controlling References are: Matsushima, Stanford Array/Wilburn, and Yu. The relevant claims and/or claim elements of the Controlling References are identified below:

Patent	Claim	Claim Language
’180	22[c]	“independently controlling simultaneous data acquisition with each of the first and second channels during a frame”

To the extent Intellectual Ventures contends that an anticipatory reference in Exhibits D1-D7 fails to disclose these claims and/or claim elements, such reference can be combined with the corresponding disclosures from any one or more of the Controlling References to render it obvious under 35 U.S.C. § 103(a), at least based on Intellectual Ventures’ Infringement Contentions, apparent claim constructions, and application of the claims to the Accused Instrumentalities, as best as they can be deciphered.

One of ordinary skill in the art would have been motivated to combine any one or more of the references provided in Exhibits D1-D7 with any one or more of the above exemplary Controlling References to improve the function and utility of the same, and such a combination would have been within that person’s skill. For example, each of the Controlling References describe a camera with two optics components with independent control of simultaneous data acquisition with each of the first and second channels during a frame:

- Matsushima, [0017] (“FIG. 1 is a block diagram showing the configuration of a digital camera. This digital camera 10 has two independent imaging systems (a first imaging system 12A and a second imaging system 12B), and subject images are formed on the light-receiving surfaces of CCD 18A and 18B via imaging optics 14A and 14B, respectively.”), [0028] (“The CPU 30 is the control unit that performs overall control of each circuit in the digital camera 10, and is connected via a bus 32 to, for example,

a gain adjustment circuit 34, a gamma correction circuit 36, a luminance and color difference signal processing circuit (known as a YC processing circuit) 38, a compression and decompression circuit 40, a card interface 44 for a memory card 42, and a display driver 48 for driving a display unit 46.")

- Stanford Camera Array, Wilburn at 768 ("Figure 5 shows the high-level architecture of our system. Each of our cameras is a separate IEEE1394 device with three ports. The cameras are connected in a tree, with one port connecting to a parent and one or two ports leading to child nodes. The parent port of the root node is connected to the host computer, which has two striped IDE hard drives to capture the image data. For large arrays, we must use multiple PC's and IEEE1394 buses. Theoretically, the 40MB/s streaming bandwidth of IEEE1394 should accommodate 62 compressed video streams, but implementation details (bus arbitration and our inability to get cycle-accurate control over the bus) limits us to 30 cameras per bus. We run a networked camera control application that lets us drive the operation of the entire array from one PC.")

- Yu, 6:30-43 ("One of the functions that digital image processing circuitry 330 performs is to control the operations of image sensors 302, 304, 306 and 308. Four independent feedback signals 332 are generated in circuitry 330 and determined from four digital image 352, 354, 356 and 358 resulting respectively from image sensors 302, 304, 306 and 308. Feedback signals 332 are then used respectively to control each of image sensors 302, 304, 306 and 308.")

And each of the remaining references provided in Exhibits D1-D7 seek ways of improving or using image capture techniques by, for example, combing data from multiple image sensors to form an image where the multiple image sensors have fields of view with different angular widths:

- UltraCam, UltraCam Brochure at 1 ("VEXCEL'S REVOLUTIONARY ULTRACAM digital camera system delivers large format aerial imagery that is radiometrically and geometrically superior to images captured by conventional film cameras at a comparable price."), 3 (describing different focal lengths and fields of view for each lens in the camera)

- Choi, [0003] ("The present invention relates generally to an image photographing device and method. In particular, the present invention relates to an image photographing device and method for combining images with different focal lengths to an in-focus image in a digital camera used for a portable terminal."), [0019]-[0021] ("According to another aspect of the present invention, in an image photographing method for combining images with different focal lengths to an in-focus image, the images are captured at different focal lengths simultaneously, each of the images is segmented into a predetermined number of blocks, in-focus blocks are marked in the images, and images represented by the in-focus blocks are combined into a final combined image."), [0050] ("Referring to FIG. 3, the image combination processor 200 comprises a block matrix unit 210 for detecting high frequency components and generating an initial block matrix, a filter unit 220 for generating a final block matrix

by filtering a predetermined block value in the initial block matrix, and an image combiner 230 for stitching the final block matrix into the background image 111.")

- Labaziewicz, Abstract ("A digital camera includes a first image sensor, a first wide angle lens for forming a first image of a scene on the first image sensor; a second image sensor, a zoom lens for forming a second image of the same scene on the second image sensor, a control element for selecting either a first sensor output from the first image sensor or a second sensor output from the second image sensor, and a processing section for producing the output image from the selected sensor output. In one variation of this embodiment, the first lens is also a zoom lens, where the maximum focal length of the first lens is less than or equal to the minimum focal length of the second zoom lens."), 4:10-20 ("What is therefore needed is a digital camera that provides a rapidly-operating extended zoom range without unduly increasing the size or cost of the digital camera.")

- Behringer, 811 ("Two b/w CCD cameras (1/2 in) with a wide angle (f = 8 mm) and a tele lens (f = 24 mm) are connected to transputer frame grabbers. Evaluation of the images is performed by the transputer based image processing module KRONOS, which can detect gray scale edges by application of correlation techniques. By integration of both camera images into bifocal vision, a look-ahead range from 5–80 m is covered. The cameras are mounted on a stabilized platform for gaze control. Pan and tilt can be controlled, depending on the point of interest.")

Combining the prior art identified in Exhibits D1-D7 with any one of the above exemplary Controlling References would have amounted to applying a known technique to a known device ready for improvement to yield predictable results. Furthermore, the prior art and exemplary Controlling References are in the same field of endeavor (*e.g.*, cameras) and given the design needs (*e.g.*, improving image capturing techniques), combined with a finite number of identified, predictable solutions (*e.g.*, expanding imaging field of view methods), a POSITA would have been motivated to combine the teachings of these references.

Alternatively, each of the references provided in Exhibits D1-D7 alone renders this element obvious, in view of the knowledge and skill of a POSITA. That is, it would have been obvious in the view of one of ordinary skill in the art to add the above limitations to any one or more of the references provided in Exhibits D1-D7. A POSITA would have been motivated to incorporate independent controlling of each image sensor in the system to ensure each sensor captures

meaningful data at the same time into existing cameras, and such a combination would have been within that person's skill. As demonstrated in the exemplary Controlling References listed above, a processor for controlling the simultaneous data acquisition of each camera in the system (even where the cameras have different fields of view) was well-known in the art by the time of the Asserted Patents' claimed invention and thus, adding it to any one or more of the references provided in Exhibits D1-D7 would have amounted to applying a known technique to a known device ready for improvement to yield predictable results.

3. The Combining Data References

The Combining Data References are: Matsushima, Stanford Array/Wilburn, UltraCam, Choi, and Yu. The relevant claims and/or claim elements of the Combining Data References are identified below:

Patent	Claim	Claim Language
'180	22[d]	"combining data received during the frame from one or more of the first and second channels to provide an image"

To the extent Intellectual Ventures contends that an anticipatory reference in Exhibits D1-D7 fails to disclose these claims and/or claim elements, such reference can be combined with the corresponding disclosures from any one or more of the Combining Data References to render it obvious under 35 U.S.C. § 103(a), at least based on Intellectual Ventures' Infringement Contentions, apparent claim constructions, and application of the claims to the Accused Instrumentalities, as best as they can be deciphered.

One of ordinary skill in the art would have been motivated to combine any one or more of the references provided in Exhibits D1-D7 with any one or more of the above exemplary Combining Data References to improve the function and utility of the same, and such a

combination would have been within that person's skill. For example, each of the Controlling References describe a method of combing data acquired by multiple channels during a frame:

- Matsushima, [0048] ("Next, the synthesis processing performed on captured images taken by the two imaging systems will be explained. In the present embodiment, by synthesizing a captured image 62A taken with the first imaging system 12A with a captured image 62B taken with the second imaging system 12B, an image with improved image quality in the center of the captured image is generated.")

- Stanford Camera Array, Wilburn at 768 ("If we tightly pack our cameras and aim them with abutting or partially overlapping fields of view, we create a high-resolution video camera. Using this configuration and existing techniques from the image mosaicing literature, we can register and blend the images to create a single image of high resolution.")

- UltraCam, Ultracam Story at 2 ("Stitching image segments into one large image is a core skill being accomplished by one of two approaches. Above is the initial assembly based on the overlaps within the 4 separate panchromatic image segments. Below is a simultaneous adjustment of all image tiles using their overlaps as well as the green color-channel.")

- Choi, [0003] ("The present invention relates generally to an image photographing device and method. In particular, the present invention relates to an image photographing device and method for combining images with different focal lengths to an in-focus image in a digital camera used for a portable terminal."), [0050]-[0053] ("Referring to FIG. 3, the image combination processor 200 comprises a block matrix unit 210 for detecting high frequency components and generating an initial block matrix, a filter unit 220 for generating a final block matrix by filtering a predetermined block value in the initial block matrix, and an image combiner 230 for stitching the final block matrix into the background image 111.")

- Yu, 7:46-59 ("Referring to FIG. 5, there is illustrated a virtual color image 500 formed by combining four intensity images 502, 504, 506 and 508. From virtual color image 500, a color or vector image 520 can be derived. Four intensity images 502, 504, 506 and 508 correspond respectively to four intensity images from four image sensors 302, 304, 306 and 308 of FIG. 3. As the name indicates, virtual color image 500 is not actually formed to occupy an image memory but is for illustrative purpose. Since four intensity images 502, 504, 506 and 508 are typically kept in a memory such as 360 of FIG. 3 after being digitized, color image 520 can be derived from virtual color image 500 that utilizes all data in intensity images 502, 504, 506 and 508")

And each of the remaining references provided in Exhibits D1-D7 seek ways of improving or using image capture techniques by, for example, combing data from multiple image sensors to form an image where the multiple image sensors have fields of view with different angular widths:

- Labaziewicz, 4:10-20 ("What is therefore needed is a digital camera that provides a rapidly-operating extended zoom range without unduly increasing the size or cost of the digital camera."), 9:7-38 ("For example, the first focal length lens 2 a may have a focal length of 30 mm equiv. (35 mm equivalent), and the second fixed focal length 2 b lens may have a focal length of 60 mm equiv., the third fixed focal length 2 b lens may have a focal length of 120 mm equiv., and the fourth fixed focal length 2 b lens may have a focal length of 270 mm equiv.")

- Behringer, 811 ("Two b/w CCD cameras (1/2 in) with a wide angle (f = 8 mm) and a tele lens (f = 24 mm) are connected to transputer frame grabbers. Evaluation of the images is performed by the transputer based image processing module KRONOS, which can detect gray scale edges by application of correlation techniques. By integration of both camera images into bifocal vision, a look-ahead range from 5–80 m is covered. The cameras are mounted on a stabilized platform for gaze control. Pan and tilt can be controlled, depending on the point of interest.")

Combining the prior art identified in Exhibits D1-D7 with any one of the above exemplary Combining Data References would have amounted to applying a known technique to a known device ready for improvement to yield predictable results. Furthermore, the prior art and exemplary Combining Data References are in the same field of endeavor (*e.g.*, cameras) and given the design needs (*e.g.*, improving image capturing techniques), combined with a finite number of identified, predictable solutions (*e.g.*, expanding imaging field of view methods), a POSITA would have been motivated to combine the teachings of these references.

Alternatively, each of the references provided in Exhibits D1-D7 alone renders this element obvious, in view of the knowledge and skill of a POSITA. That is, it would have been obvious in the view of one of ordinary skill in the art to add the above limitations to any one or more of the references provided in Exhibits D1-D7. A POSITA would have been motivated to incorporate combining data captured from different image sensors into one image using existing cameras, and such a combination would have been within that person's skill. As demonstrated in the exemplary Combining Data References listed above, combining data from different cameras (even when the different cameras have different fields of view) was well-known in the art by the time of the Asserted Patents' claimed invention and thus, adding it to any one or more of the references

provided in Exhibits D1-D7 would have amounted to applying a known technique to a known device ready for improvement to yield predictable results.

4. The Third and Fourth FOV References

The Third and Fourth FOV References are: Labaziewicz. The relevant claims and/or claim elements of the Third and Fourth FOV References are identified below:

Patent	Claim	Claim Language
’180	28	“The method of claim 22, comprising configuring a third optics component relative to a third image sensor to form a third channel having a third FOV, wherein the third FOV is different from one or more of the first FOV and the second FOV.”
	30	“The method of claim 28, comprising configuring a fourth optics component relative to a fourth image sensor to form a fourth channel having a fourth FOV, wherein the fourth FOV is different from one or more of the first FOV, the second FOV and the third FOV.”

To the extent Intellectual Ventures contends that an anticipatory reference in Exhibits D1-D7 fails to disclose these claims and/or claim elements, such reference can be combined with the corresponding disclosures from any one or more of the Third and Fourth FOV References to render it obvious under 35 U.S.C. § 103(a), at least based on Intellectual Ventures’ Infringement Contentions, apparent claim constructions, and application of the claims to the Accused Instrumentalities, as best as they can be deciphered.

One of ordinary skill in the art would have been motivated to combine any one or more of the references provided in Exhibits D1-D7 with any one or more of the above exemplary Third and Fourth FOV References to improve the function and utility of the same, and such a combination would have been within that person’s skill. For example, each of the Third and Fourth FOV References describe a method of configuring four optics components where each optics component has a different field of view:

- Labaziewicz, 9:7-38 (“For example, the first focal length lens 2 a may have a focal length of 30 mm equiv. (35 mm equivalent), and the second fixed focal length 2 b lens

may have a focal length of 60 mm equiv., the third fixed focal length 2 b lens may have a focal length of 120 mm equiv., and the fourth fixed focal length 2 b lens may have a focal length of 270 mm equiv.")

And each of the remaining references provided in Exhibits D1-D7 seek ways of improving or using image capture techniques with, for example, independent control of different sensors:

- Matsushima, Abstract ("To provide a digital camera that can prevent unnatural boundary regions even when a telephoto captured image is combined in the center of a wide-angle captured image, and that can obtain images at various magnifications using a simple configuration."), [0017] ("FIG. 1 is a block diagram showing the configuration of a digital camera. This digital camera 10 has two independent imaging systems (a first imaging system 12A and a second imaging system 12B), and subject images are formed on the light-receiving surfaces of CCD 18A and 18B via imaging optics 14A and 14B, respectively."), [0028] ("The CPU 30 is the control unit that performs overall control of each circuit in the digital camera 10, and is connected via a bus 32 to, for example, a gain adjustment circuit 34, a gamma correction circuit 36, a luminance and color difference signal processing circuit (known as a YC processing circuit) 38, a compression and decompression circuit 40, a card interface 44 for a memory card 42, and a display driver 48 for driving a display unit 46.")

- Stanford Camera Array, Wilburn at 766 ("Since our goal was to create a general purpose system, we wanted tight control over both the timing of cameras and their positions. We also needed to be able to record the data from all the cameras, but with far fewer PCs than the Virtualized Reality™ system."), Wilburn at 768 ("Figure 5 shows the high-level architecture of our system. Each of our cameras is a separate IEEE1394 device with three ports. The cameras are connected in a tree, with one port connecting to a parent and one or two ports leading to child nodes. The parent port of the root node is connected to the host computer, which has two striped IDE hard drives to capture the image data. For large arrays, we must use multiple PC's and IEEE1394 buses. Theoretically, the 40MB/s streaming bandwidth of IEEE1394 should accommodate 62 compressed video streams, but implementation details (bus arbitration and our inability to get cycle-accurate control over the bus) limits us to 30 cameras per bus. We run a networked camera control application that lets us drive the operation of the entire array from one PC.")

- UltraCam, UltraCam Brochure at 1 ("VEXCEL'S REVOLUTIONARY ULTRACAM digital camera system delivers large format aerial imagery that is radiometrically and geometrically superior to images captured by conventional film cameras at a comparable price."), 2 ("Stitching image segments into one large image is a core skill being accomplished by one of two approaches. Above is the initial assembly based on the overlaps within the 4 separate panchromatic image segments. Below is a simultaneous adjustment of all image tiles using their overlaps as well as the green color-channel.")

- Choi, [0003] ("The present invention relates generally to an image photographing device and method. In particular, the present invention relates to an image photographing device and method for combining images with different focal lengths to an in-focus image in a digital camera used for a portable terminal."), [0050]-[0053] ("Referring to FIG. 3, the image combination processor 200 comprises a block matrix unit 210 for detecting high frequency components and generating an initial block matrix, a filter unit 220 for generating a final block matrix by filtering a predetermined block value in the initial block matrix, and an image combiner 230 for stitching the final block matrix into the background image 111.")

- Yu, 2:25-35 ("Under the constraints of improving image qualities without incurring substantial costs to the digital cameras, the present invention discloses improved digital cameras that use multiple image sensors with multiple lenses."), 6:30-43 ("One of the functions that digital image processing circuitry 330 performs is to control the operations of image sensors 302, 304, 306 and 308. Four independent feedback signals 332 are generated in circuitry 330 and determined from four digital image 352, 354, 356 and 358 resulting respectively from image sensors 302, 304, 306 and 308. Feedback signals 332 are then used respectively to control each of image sensors 302, 304, 306 and 308.")

Combining the prior art identified in Exhibits D1-D7 with any one of the above exemplary Third and Fourth FOV References would have amounted to applying a known technique to a known device ready for improvement to yield predictable results. Furthermore, the prior art and exemplary Third and Fourth FOV References are in the same field of endeavor (*e.g.*, cameras) and given the design needs (*e.g.*, improving image capturing] techniques), combined with a finite number of identified, predictable solutions (*e.g.*, expanding imaging field of view methods), a POSITA would have been motivated to combine the teachings of these references.

Alternatively, each of the references provided in Exhibits D1-D7 alone renders this element obvious, in view of the knowledge and skill of a POSITA. That is, it would have been obvious in the view of one of ordinary skill in the art to add the above limitations to any one or more of the references provided in Exhibits D1-D7. A POSITA would have been motivated to incorporate more than two channels each have a unique field of view to better capture a broader scene into existing cameras, and such a combination would have been within that person's skill. As demonstrated in the exemplary Third and Fourth FOV References listed above, camera systems

with more than two fields of view for capturing broader views of the scene were well-known in the art by the time of the Asserted Patents' claimed invention and thus, adding it to any one or more of the references provided in Exhibits D1-D7 would have amounted to applying a known technique to a known device ready for improvement to yield predictable results.

E. The '395 Patent

NAME	DESCRIPTION:			
	The Setting Multiple Bit References	The Instruction Agent References	The Rolling Back References	The Remains Set Until Execution References
Herlihy	✓		✓	✓
Rajwar	✓	✓		
Tremblay	✓			✓
Widell	✓			
Bobba		✓	✓	
Moir	✓	✓	✓	✓
Martinez		✓	✓	✓

1. The Setting Multiple Bit References

The Setting Multiple Bit References are: Herlihy, Rajwar, Tremblay, Widell, and Moir. The relevant claims and/or claim elements of the Setting Multiple Bit References are identified below:

Patent	Claim	Claim Language
'395	1[a]	"setting a first bit of an indicator associated with a cache line in a cache memory if said cache line has been accessed in response to a processor executing an instruction in a first group of instructions"
'395	1[b]	"setting a second bit of said indicator while said first bit remains set if said cache line has also been accessed in response to said processor executing an instruction in a second group of instructions"

To the extent Intellectual Ventures contends that an anticipatory reference in Exhibits E1-E7 fails to disclose these claims and/or claim elements, such reference can be combined with the corresponding disclosures from any one or more of the Setting Multiple Bit References to render it obvious under 35 U.S.C. § 103(a), at least based on Intellectual Ventures' Infringement

Contentions, apparent claim constructions, and application of the claims to the Accused Instrumentalities, as best as they can be deciphered.

One of ordinary skill in the art would have been motivated to combine any one or more of the references provided in Exhibits E1-E7 with any one or more of the above exemplary Setting Multiple Bit References to improve the function and utility of the same, and such a combination would have been within that person's skill.

Combining the prior art identified in Exhibits E1-E7 with any one of the above exemplary Setting Multiple Bit References would have amounted to applying a known technique to a known device ready for improvement to yield predictable results. Furthermore, the prior art and exemplary Setting Multiple Bit References are in the same field of endeavor (*e.g.*, methods and systems for management and maintaining cache consistency) and given the design needs (*e.g.*, improving memory management techniques), combined with a finite number of identified, predictable solutions (*e.g.*, expanding beyond existing memory management methods), a POSITA would have been motivated to combine the teachings of these references.

Alternatively, each of the references provided in Exhibits E1-E7 alone renders this element obvious, in view of the knowledge and skill of a POSITA. That is, it would have been obvious in the view of one of ordinary skill in the art to add the above limitations to any one or more of the references provided in Exhibits E1-E7. A POSITA would have been motivated to incorporate setting multiple bits in accordance with executing instructions into memory management methods, systems, and devices and such a combination would have been within that person's skill. As demonstrated in the exemplary Setting Multiple Bit References listed above, setting multiple bits in accordance with executing instructions into were well-known in the art by the time of the Asserted Patent's claimed invention and thus, adding it to any one or more of the references

provided in Exhibits E1-E7 would have amounted to applying a known technique to a known device ready for improvement to yield predictable results.

2. The Instruction Agent References

The Instruction Agent References are: Raiwar, Bobba, Moir, and Martinez. The relevant claims and/or claim elements of the Instruction Agent References are identified below:

Patent	Claim	Claim Language
’395	1[c]	“executing a third group of instructions that causes said cache line to be accessed, wherein said third group of instructions is executed by an agent other than said processor”

To the extent Intellectual Ventures contends that an anticipatory reference in Exhibits E1-E7 fails to disclose these claims and/or claim elements, such reference can be combined with the corresponding disclosures from any one or more of the Instruction Agent References to render it obvious under 35 U.S.C. § 103(a), at least based on Intellectual Ventures’ Infringement Contentions, apparent claim constructions, and application of the claims to the Accused Instrumentalities, as best as they can be deciphered.

One of ordinary skill in the art would have been motivated to combine any one or more of the references provided in Exhibits E1-E7 with any one or more of the above exemplary Instruction Agent References to improve the function and utility of the same, and such a combination would have been within that person’s skill.

Combining the prior art identified in Exhibits E1-E7 with any one of the above exemplary Instruction Agent References would have amounted to applying a known technique to a known device ready for improvement to yield predictable results. Furthermore, the prior art and exemplary Instruction Agent References are in the same field of endeavor (*e.g.*, methods and systems for management and maintaining cache consistency) and given the design needs (*e.g.*, improving memory management techniques), combined with a finite number of identified, predictable

solutions (*e.g.*, expanding beyond existing memory management methods), a POSITA would have been motivated to combine the teachings of these references.

Alternatively, each of the references provided in Exhibits E1-E7 alone renders this element obvious, in view of the knowledge and skill of a POSITA. That is, it would have been obvious in the view of one of ordinary skill in the art to add the above limitations to any one or more of the references provided in Exhibits E1-E7. A POSITA would have been motivated to incorporate accessing cache lines in accordance with instructions into existing memory management methods, systems, and devices, and such a combination would have been within that person's skill. As demonstrated in the exemplary Instruction Agent References listed above, techniques for accessing cache lines in accordance with instructions were well-known in the art by the time of the Asserted Patent's claimed invention and thus, adding it to any one or more of the references provided in Exhibits E1-E7 would have amounted to applying a known technique to a known device ready for improvement to yield predictable results.

3. The Rolling Back References

The Rolling Back References are: Herlihy, Bobba, Moir, and Martinez. The relevant claims and/or claim elements of the Rolling Back References are identified below:

Patent	Claim	Claim Language
'395	1[d]	"wherein said processing comprises rolling back said first group of instructions provided said first bit is set and rolling back said second group of instructions provided said second bit is set before allowing an instruction in said third group to access said cache line, and otherwise granting said access"
'395	2[a]	"rolling back said first group of instructions provided said first bit is set and rolling back said second group of instructions provided said second bit is set, and then granting said access provided said cache line is in other than said shared state, and otherwise granting said access only when said cache line is in said shared state"

To the extent Intellectual Ventures contends that an anticipatory reference in Exhibits E1-E7 fails to disclose these claims and/or claim elements, such reference can be combined with the corresponding disclosures from any one or more of the Rolling Back References to render it obvious under 35 U.S.C. § 103(a), at least based on Intellectual Ventures' Infringement Contentions, apparent claim constructions, and application of the claims to the Accused Instrumentalities, as best as they can be deciphered.

One of ordinary skill in the art would have been motivated to combine any one or more of the references provided in Exhibits E1-E7 with any one or more of the above exemplary Rolling Back References to improve the function and utility of the same, and such a combination would have been within that person's skill.

Combining the prior art identified in Exhibits E1-E7 with any one of the above exemplary Rolling Back References would have amounted to applying a known technique to a known device ready for improvement to yield predictable results. Furthermore, the prior art and exemplary Rolling Back References are in the same field of endeavor (*e.g.*, methods and systems for management and maintaining cache consistency) and given the design needs (*e.g.*, improving memory management techniques), combined with a finite number of identified, predictable solutions (*e.g.*, expanding beyond existing memory management methods), a POSITA would have been motivated to combine the teachings of these references..

Alternatively, each of the references provided in Exhibits E1-E7 alone renders this element obvious, in view of the knowledge and skill of a POSITA. That is, it would have been obvious in the view of one of ordinary skill in the art to add the above limitations to any one or more of the references provided in Exhibits E1-E7. A POSITA would have been motivated to incorporate rolling back instructions to clear cache lines into existing memory management methods, systems,

and devices, and such a combination would have been within that person's skill. As demonstrated in the exemplary Rolling Back References listed above, rolling back instructions to clear cache lines were well-known in the art by the time of the Asserted Patent's claimed invention and thus, adding it to any one or more of the references provided in Exhibits E1-E7 would have amounted to applying a known technique to a known device ready for improvement to yield predictable results.

4. The Remains Set Until Execution References

The Remains Set Until Execution References are: Herlihy, Tremblay, Moir, and Martinez. The relevant claims and/or claim elements of the Remains Set Until Execution References are identified below:

Patent	Claim	Claim Language
'395	5	"clearing said first bit when said execution of said first group of instructions is ended, wherein said second bit remains set until execution of said second group of instructions is ended"

To the extent Intellectual Ventures contends that an anticipatory reference in Exhibits E1-E7 fails to disclose these claims and/or claim elements, such reference can be combined with the corresponding disclosures from any one or more of the Remains Set Until Execution References to render it obvious under 35 U.S.C. § 103(a), at least based on Intellectual Ventures' Infringement Contentions, apparent claim constructions, and application of the claims to the Accused Instrumentalities, as best as they can be deciphered.

One of ordinary skill in the art would have been motivated to combine any one or more of the references provided in Exhibits E1-E7 with any one or more of the above exemplary Remains Set Until Execution References to improve the function and utility of the same, and such a combination would have been within that person's skill.

Combining the prior art identified in Exhibits E1-E7 with any one of the above exemplary Remains Set Until Execution References would have amounted to applying a known technique to a known device ready for improvement to yield predictable results. Furthermore, the prior art and exemplary Remains Set Until Execution References are in the same field of endeavor (*e.g.*, methods and systems for management and maintaining cache consistency) and given the design needs (*e.g.*, improving memory management techniques), combined with a finite number of identified, predictable solutions (*e.g.*, expanding beyond existing memory management methods), a POSITA would have been motivated to combine the teachings of these references.

Alternatively, each of the references provided in Exhibits E1-E7 alone renders this element obvious, in view of the knowledge and skill of a POSITA. That is, it would have been obvious in the view of one of ordinary skill in the art to add the above limitations to any one or more of the references provided in Exhibits E1-E7. A POSITA would have been motivated to incorporate instructions for bit management into methods and systems for memory management, and such a combination would have been within that person's skill. As demonstrated in the exemplary Remains Set Until Execution References listed above, instructions for bit management were well-known in the art by the time of the Asserted Patent's claimed invention and thus, adding it to any one or more of the references provided in Exhibits E1-E7 would have amounted to applying a known technique to a known device ready for improvement to yield predictable results.

F. The '158 Patent

NAME	DESCRIPTION:			
	The Plurality References	**The Pass Light References**	**The Integration Time References**	**The Incident Light References**
Matsushima	✓	✓	✓	✓
Stanford Array (and Wilburn Thesis)	✓	✓		✓
UltraCam	✓			
McCutchen	✓		✓	✓

Ginosar	✓	✓	✓	
Yu	✓	✓	✓	✓
Morris		✓	✓	✓
Miyazaki			✓	✓

1. The Plurality References

The Plurality References are: Matsushima, Yu, Stanford Array/Wilburn, UltraCam, and McCutchen. The relevant claims and/or claim elements of the Plurality References are identified below:

Patent	Claim	Claim Language
’158	1[a]	“a plurality of sensors”
’158	1[b]	“a plurality of optics components”

To the extent Intellectual Ventures contends that an anticipatory reference in Exhibits F1-F8 fail to disclose these claims and/or claim elements, such reference can be combined with the corresponding disclosures from any one or more of the Plurality References to render it obvious under 35 U.S.C. § 103(a), at least based on Intellectual Ventures’ Infringement Contentions, apparent claim constructions, and application of the claims to the Accused Instrumentalities, as best as they can be deciphered.

One of ordinary skill in the art would have been motivated to combine any one or more of the references provided in Exhibits F1-F8 with any one or more of the above exemplary Sensors References to improve the function and utility of the same, and such a combination would have been within that person’s skill. For example, each of the Plurality References describe a camera with multiple image sensors and multiple optics components:

- Matsushima, [0009] (“The present invention has two imaging systems, and each imaging system has an image sensor and a lens for forming an image of the subject on the image sensor.”)
- Stanford Camera Array, Wilburn at 765 (“In this paper, we describe a unique array of 100 custom video cameras that we have built, and we summarize our experiences using

this array in a range of imaging applications."), 767 ("Camera Tiles. One of the most critical decisions for the array was the choice of image sensors and their optical systems. While we thought it was reasonable to assume that computation would continue to get cheaper, we found it more difficult to make that same argument for high-quality lenses. Thus, we choose to use inexpensive lenses and optics as well as inexpensive sensors.")

- UltraCam, UltraCam Story at 1 ("The UltraCam-project created a novel Large Format Digital Aerial Camera. It was inspired by the ISPRS Congress 2000 in Amsterdam. The search for a promising imaging idea succeeded in May 2001, defining a tiling approach with multiple lenses and multiple area CCD arrays to assemble a seamless and geometrically stable monolithic photogrammetric aerial large format image.")

- McCutchen, Figs. 2, 5, 7, 19, and 14:28-50 ("FIG. 7 shows a block diagram of the camera module, showing the components both inside and outside of the boundary 104 of the module itself. The optical axis of the module is at 53, and the angle of view of 74.75 degrees is shown at 64. For an electro-optical lens producing two or three screens, as described below, this angle would be up to 150 degrees. The lens is at 105.")

- Ginosar, 6:33-41 ("Reference is now made to FIG. 3 which illustrates an alternative embodiment of the present invention wherein multiple cameras 70 are employed, each acquiring the same image at a different exposure level.")

- Yu, Title ("Digital Cameras Using Multiple Sensors with Multiple Lenses")

And each of the remaining references provided in Exhibits F1-F8 seek ways of improving image capture techniques by, for example, using a processing component to control the integration time of camera's image sensor:

- Ginosar, 1:28-40 ("The present invention seeks to provide improved video image enhancement apparatus which overcomes limitations of the prior art apparatus and techniques discussed above. There is thus provided in accordance with a preferred embodiment of the present invention, video imaging apparatus including apparatus for providing a plurality of video images of a scene at different exposure levels and apparatus for processing the plurality of video images to produce a combined video image including image information from the plurality of video images and including enhanced detail at local areas therein."), 2:45-60 ("Control of the photoelectric accumulation of charge may be accomplished generally in two ways, by operating a shutter, such as an electronic shutter to control the light input or by controlling the integration time of the sensor array."), 7:31-10 ("Reference is now made to FIG. 4, which illustrates an alternative embodiment of video imaging system. Here, a plurality of cameras 80, each operative at a different exposure level or sensitivity, simultaneously acquires different versions of the same image at differing sensitivities.")

- Morris, Title ("Controlling Integration Times of Pixel Sensors"), 7:65-8:13 ("The camera 210 may also include a microprocessor 262 that coordinates activities of the camera 210. To accomplish this, the microprocessor 262 is coupled to the bus 220 through a bus interface 270. In some embodiments, the microprocessor 262 interacts with the imager 140 (via the capture and signal processing unit 148) to retrieve indications of the energy time Stamps for each group 113. After retrieving the time Stamps, the microprocessor 262 may determine the durations of the integration intervals for the groups, as described above.")

- Miyazaki, 1:65-67 ("It is therefore an object of the present invention to provide an image pickup apparatus capable of surely outputting a picture picked up at a desired timing."), 7:64–8:21 ("For example, as shown in FIG. 3, the controller 38 determines an exposure value for a shot on the basis of the photometric value calculated by the digital signal processor 44.")

Combining the prior art identified in Exhibits F1-F8 with any one of the above exemplary Plurality References would have amounted to applying a known technique to a known device ready for improvement to yield predictable results. Furthermore, the prior art and exemplary Sensors References are in the same field of endeavor (*e.g.*, cameras) and given the design needs (*e.g.*, improving image capturing techniques), combined with a finite number of identified, predictable solutions (*e.g.*, expanding beyond existing single sensor, single lens methods), a POSITA would have been motivated to combine the teachings of these references.

Alternatively, each of the references provided in Exhibits F1-F8 alone renders this element obvious, in view of the knowledge and skill of a POSITA. That is, it would have been obvious in the view of one of ordinary skill in the art to add the above limitations to any one or more of the references provided in Exhibits F1-F8. A POSITA would have been motivated to incorporate multiple sensors and multiple lenses into existing cameras, and such a combination would have been within that person's skill. As demonstrated in the exemplary Plurality References listed above, cameras with multiple sensors and multiple lenses were well-known in the art by the time of the Asserted Patents' claimed invention and thus, adding it to any one or more of the references

provided in Exhibits F1-F8 would have amounted to applying a known technique to a known device ready for improvement to yield predictable results.

2. The Pass Light References

The Pass Light References are: Matsushima, Yu, Stanford Array/Wilburn, Morris, and Ginosar. The relevant claims and/or claim elements of the Pass Light References are identified below:

Patent	Claim	Claim Language
’158	1[c]	“wherein each optics component of the plurality of optics components is configured to pass light to a sensor of the plurality of sensors”

To the extent Intellectual Ventures contends that an anticipatory reference in Exhibits F1-F8. fails to disclose these claims and/or claim elements, such reference can be combined with the corresponding disclosures from any one or more of the Pass Light References to render it obvious under 35 U.S.C. § 103(a), at least based on Intellectual Ventures’ Infringement Contentions, apparent claim constructions, and application of the claims to the Accused Instrumentalities, as best as they can be deciphered.

One of ordinary skill in the art would have been motivated to combine any one or more of the references provided in Exhibits F1-F8 with any one or more of the above exemplary Pass Light References to improve the function and utility of the same, and such a combination would have been within that person’s skill. For example, each of the Pass Light References describe a camera with a lens that passes light to the corresponding image sensor for that lens:

- Matsushima, [0023] (“The subject images formed on the light receiving surfaces of CCD 18A and CCD 18B via their respective imaging optics 14A and 14B are subjected to signal charge conversion by each sensor in the CCD that corresponds to the amount of incident light”)
- Stanford Camera Array, Wilburn at 769 (“Finally, unlike a single camera, the exposure time for each frame can be greater than the inverse of the high-speed frame rate. In

other words, we can overlap frame times among the cameras. This allows us to collect more light and reduce noise in our images at the cost of increased motion blur.")

- Ginosar, 2:45-60 ("Control of the photoelectric accumulation of charge may be accomplished generally in two ways, by operating a shutter, such as an electronic shutter to control the light input or by controlling the integration time of the sensor array.")

- Yu, cl. 6 ("four image sensors, closely positioned with respect to a common plane, four lenses, each mounted in front of one of the four image sensors; first three of said four image sensors being respectively sensitive to three different regions of visible color spectrum, a fourth sensor of said four image sensors being sensitive to a full region of said visible color spectrum, said full region including said three different regions in said visible color spectrum")

- Morris, 3:63-4:8 ("Thus, for example, a pixel sensing unit 118 that receive photons from a high intensity pixel accumulates more energy during the integration interval than a pixel sensing unit 118 that senses light from a lower intensity pixel.")

And each of the remaining references provided in Exhibits F1-F8 seek ways of improving image capture techniques by, for example, using multiple sensors with multiple lens and controlling the integration time of the camera's image sensors:

- Stanford Camera Array, Wilburn at 765 ("In this paper, we describe a unique array of 100 custom video cameras that we have built, and we summarize our experiences using this array in a range of imaging applications."), 767 ("Camera Tiles. One of the most critical decisions for the array was the choice of image sensors and their optical systems. While we thought it was reasonable to assume that computation would continue to get cheaper, we found it more difficult to make that same argument for high-quality lenses. Thus, we choose to use inexpensive lenses and optics as well as inexpensive sensors.")

- UltraCam, UltraCam Brochure at 1 ("VEXCEL'S REVOLUTIONARY ULTRACAM digital camera system delivers large format aerial imagery that is radiometrically and geometrically superior to images captured by conventional film cameras at a comparable price."), UltraCam Story at 1 ("The UltraCam-project created a novel Large Format Digital Aerial Camera. It was inspired by the ISPRS Congress 2000 in Amsterdam. The search for a promising imaging idea succeeded in May 2001, defining a tiling approach with multiple lenses and multiple area CCD arrays to assemble a seamless and geometrically stable monolithic photogrammetric aerial large format image.")

- McCutchen, 4:22-31 ("Therefore it is the object of the present invention to describe a method and apparatus for an environmental imaging system comprising a modular camera and matching projection system based on the twelve-sided dodecahedron, for

photography and projection of high-resolution pentagonal images which are apparently continuous over an interior surface covering a hemisphere or more, thereby capturing and creating the impression of a total environment in a dome or spherical theater."), Figs. 2, 5, 7, 19, and 14:28-50 ("FIG. 7 shows a block diagram of the camera module, showing the components both inside and outside of the boundary 104 of the module itself. The optical axis of the module is at 53, and the angle of view of 74.75 degrees is shown at 64. For an electro-optical lens producing two or three screens, as described below, this angle would be up to 150 degrees. The lens is at 105.")

- Ginosar, 1:28-40 ("The present invention seeks to provide improved video image enhancement apparatus which overcomes limitations of the prior art apparatus and techniques discussed above. There is thus provided in accordance with a preferred embodiment of the present invention, video imaging apparatus including apparatus for providing a plurality of video images of a scene at different exposure levels and apparatus for processing the plurality of video images to produce a combined video image including image information from the plurality of video images and including enhanced detail at local areas therein."), 6:33-41 ("Reference is now made to FIG. 3 which illustrates an alternative embodiment of the present invention wherein multiple cameras 70 are employed, each acquiring the same image at a different exposure level.")

- Miyazaki, 1:65-67 ("It is therefore an object of the present invention to provide an image pickup apparatus capable of surely outputting a picture picked up at a desired timing."), 7:64–8:21 ("For example, as shown in FIG. 3, the controller 38 determines an exposure value for a shot on the basis of the photometric value calculated by the digital signal processor 44.")

Combining the prior art identified in Exhibits F1-F8 with any one of the above exemplary Pass Light References would have amounted to applying a known technique to a known device ready for improvement to yield predictable results. Furthermore, the prior art and exemplary Pass Light References are in the same field of endeavor (*e.g.*, cameras) and given the design needs (*e.g.*, improving image capturing techniques), combined with a finite number of identified, predictable solutions (*e.g.*, expanding beyond existing single sensor, single lens methods), a POSITA would have been motivated to combine the teachings of these references.

Alternatively, each of the references provided in Exhibits F1-F8 alone renders this element obvious, in view of the knowledge and skill of a POSITA. That is, it would have been obvious in the view of one of ordinary skill in the art to add the above limitations to any one or more of the

references provided in Exhibits F1-F8. A POSITA would have been motivated to incorporate passing light through each lens to hit an image sensor into existing cameras, and such a combination would have been within that person's skill. As demonstrated in the exemplary Pass Light References listed above, passing light through a lens to hit an image sensor was well-known in the art by the time of the Asserted Patents' claimed invention and thus, adding it to any one or more of the references provided in Exhibits F1-F8 would have amounted to applying a known technique to a known device ready for improvement to yield predictable results.

3. The Integration Time References

The Integration Time References are: Matsushima, Yu, Morris, Ginosar, and McCutchen. The relevant claims and/or claim elements of the Integration Time References are identified below:

Patent	Claim	Claim Language
'158	1[d]	"a processing component configured to control an integration time of each sensor"

To the extent Intellectual Ventures contends that an anticipatory reference in Exhibits F1-F8 fails to disclose these claims and/or claim elements, such reference can be combined with the corresponding disclosures from any one or more of the Integration Time References to render it obvious under 35 U.S.C. § 103(a), at least based on Intellectual Ventures' Infringement Contentions, apparent claim constructions, and application of the claims to the Accused Instrumentalities, as best as they can be deciphered.

One of ordinary skill in the art would have been motivated to combine any one or more of the references provided in Exhibits F1-F8 with any one or more of the above exemplary Integration Time References to improve the function and utility of the same, and such a combination would have been within that person's skill. For example, each of the Integration Time References describe a camera with a processing component to control the integration time of the image sensor:

- Matsushima, [0028] ("The CPU 30 is the control unit that performs overall control of each circuit in the digital camera 10, and is connected via a bus 32 to, for example, a gain adjustment circuit 34, a gamma correction circuit 36, a luminance and color difference signal processing circuit (known as a YC processing circuit) 38, a compression and decompression circuit 40, a card interface 44 for a memory card 42, and a display driver 48 for driving a display unit 46"), [0029] ("The CPU 30 controls the corresponding circuit blocks based on signals inputted from a control panel 50, controls the zooming operations of the imaging lenses 15A and 15B and the autofocusing (AF) operations of the focus lenses 16A and 16B, and performs automatic exposure adjustments (AE).")

- McCutchen, 12:30-39 ("Sensors for automatic focus and exposure are shown at 79 and 80. A cable carrying readings from the sensors for exposure and focus is at 81, and a cable for carrying control signals back to the motors to actually make the settings is at 82. These cables are shown connected to the side of the inner cone, by making use of a channel 83 in the inner collar ring made possible by the greater distance from the cone walls found at the pentagonal points. The motor to control focus on the lens, through dual gears, is shown at 84, and to control exposure at 85.")

- Ginosar, 2:45-60 ("Control of the photoelectric accumulation of charge may be accomplished generally in two ways, by operating a shutter, such as an electronic shutter to control the light input or by controlling the integration time of the sensor array."), 7:31-10 ("Reference is now made to FIG. 4, which illustrates an alternative embodiment of video imaging system. Here, a plurality of cameras 80, each operative at a different exposure level or sensitivity, simultaneously acquires different versions of the same image at differing sensitivities.")

- Yu, 6:27-43 ("One of the functions that digital image processing circuitry 330 performs is to control the operations of image sensors 302, 304, 306 and 308. Four independent feedback signals 332 are generated in circuitry 330 and determined from four digital image 352, 354, 356 and 358 resulting respectively from image sensors 302, 304, 306 and 308. Feedback signals 332 are then used respectively to control each of image sensors 302, 304, 306 and 308. For example, if digital image 354 from green image sensor 304 tends to be saturated, technically image sensor 304 should be less exposed. In digital image processing circuitry 330, digital image 354 is first analyzed, from which a corresponding feedback signal can be generated to shorten the exposure time of image sensor 304.")

- Morris, Title ("Controlling Integration Times of Pixel Sensors"), 7:65-8:13 ("The camera 210 may also include a microprocessor 262 that coordinates activities of the camera 210. To accomplish this, the microprocessor 262 is coupled to the bus 220 through a bus interface 270. In some embodiments, the microprocessor 262 interacts with the imager 140 (via the capture and signal processing unit 148) to retrieve indications of the energy time Stamps for each group 113. After retrieving the time Stamps, the microprocessor 262 may determine the durations of the integration intervals for the groups, as described above.")

- Miyazaki, 7:64–8:21 ("For example, as shown in FIG. 3, the controller 38 determines an exposure value for a shot on the basis of the photometric value calculated by the digital signal processor 44.")

And each of the remaining references provided in Exhibits F1-F8 seek ways of improving image capture techniques by, for example, using multiple image sensors and multiple optics components:

- Stanford Camera Array, Wilburn at 765 ("In this paper, we describe a unique array of 100 custom video cameras that we have built, and we summarize our experiences using this array in a range of imaging applications."), 766 ("Since our goal was to create a general purpose system, we wanted tight control over both the timing of cameras and their positions. We also needed to be able to record the data from all the cameras, but with far fewer PCs than the Virtualized Reality™ system."), 767 ("Camera Tiles. One of the most critical decisions for the array was the choice of image sensors and their optical systems. While we thought it was reasonable to assume that computation would continue to get cheaper, we found it more difficult to make that same argument for high-quality lenses. Thus, we choose to use inexpensive lenses and optics as well as inexpensive sensors.")

- UltraCam, UltraCam Brochure at 1 ("VEXCEL'S REVOLUTIONARY ULTRACAM digital camera system delivers large format aerial imagery that is radiometrically and geometrically superior to images captured by conventional film cameras at a comparable price."), UltraCam Story at 1 ("The UltraCam-project created a novel Large Format Digital Aerial Camera. It was inspired by the ISPRS Congress 2000 in Amsterdam. The search for a promising imaging idea succeeded in May 2001, defining a tiling approach with multiple lenses and multiple area CCD arrays to assemble a seamless and geometrically stable monolithic photogrammetric aerial large format image.")

Combining the prior art identified in Exhibits F1-F8 with any one of the above exemplary Integration Time References would have amounted to applying a known technique to a known device ready for improvement to yield predictable results. Furthermore, the prior art and exemplary Integration Time References are in the same field of endeavor (*e.g.*, cameras) and given the design needs (*e.g.*, improving image capturing techniques), combined with a finite number of identified, predictable solutions (*e.g.*, expanding beyond existing single sensor, single lens methods while still controlling the multiple sensors), a POSITA would have been motivated to combine the teachings of these references.

Alternatively, each of the references provided in Exhibits F1-F8 alone renders this element obvious, in view of the knowledge and skill of a POSITA. That is, it would have been obvious in

the view of one of ordinary skill in the art to add the above limitations to any one or more of the references provided in Exhibits F1-F8. A POSITA would have been motivated to incorporate controlling integration time of each sensor into existing camera, and such a combination would have been within that person's skill. As demonstrated in the exemplary Integration Time References listed above, controlling integration time of image sensors was well-known in the art by the time of the Asserted Patents' claimed invention and thus, adding it to any one or more of the references provided in Exhibits F1-F8 would have amounted to applying a known technique to a known device ready for improvement to yield predictable results.

4. The Incident Light References

The Incident Light References are: Matsushima, Yu, Morris, Stanford Array/Wilburn, and McCutchen. The relevant claims and/or claim elements of the Incident Light References are identified below:

Patent	Claim	Claim Language
'158	8	"The device of claim 1, wherein the integration time is controlled based on incident light level."

To the extent Intellectual Ventures contends that an anticipatory reference in Exhibits F1-F8 fails to disclose these claims and/or claim elements, such reference can be combined with the corresponding disclosures from any one or more of the Incident Light References to render it obvious under 35 U.S.C. § 103(a), at least based on Intellectual Ventures' Infringement Contentions, apparent claim constructions, and application of the claims to the Accused Instrumentalities, as best as they can be deciphered.

One of ordinary skill in the art would have been motivated to combine any one or more of the references provided in Exhibits F1-F8 with any one or more of the above exemplary Incident Light References to improve the function and utility of the same, and such a combination would

have been within that person's skill. For example, each of the Incident Light References describe a camera with a processing component to control the integration time of the image sensor where the integration time control is based on incident light:

- Matsushima, [0002] ("In digital cameras, when an image is captured, an image of the subject is formed on the light-receiving surface of the CCD, and each sensor in the CCD performs a signal charge conversion corresponding to the amount of incident light.")

- Stanford Camera Array, Wilburn at 769 ("ach iteration of our calibration routine takes images of a white target under several different exposure levels. The target is placed close enough to the array to fill the field of view of all cameras. The exposure setting is the actual duration for which the sensor integrates light and is very accurate. The routine calculates the slopes and offsets of the sensor responses, then computes new settings to match a target response.")

- McCutchen, 14:28-50 ("A sensor for exposure and focus control is shown at 106, with its readings going to a central processing unit 107. The processor evaluates the exposure and focus readings for the various modules, using weighting toward one module or zone if desired, then sets the overall exposure and focus for all of the modules, along line 108, implimented by a motorized exposure and focus control 109.")

- Yu, 9:4-18 ("FIG. 7 shows a process that B/W intensity image 508 is used to increase the dynamic range of one of intensity images 502, 504 and 506. It is well known that colors become less significant when a light intensity is low, i.e. light is dim. Therefore, till intensity 702 reaches a certain level 704, a color sensor, i.e. one of sensors 302, 304 and 306 of FIG. 3, starts to output meaningful signals 706.")

- Morris, 3:7-29 ("Due to this independent control of the integration durations, the exposure time of each different group 113 may be adjusted to accommodate the brightness of a different portion of the optical image.")

- Miyazaki, 7:64-8:21 ("For example, as shown in FIG. 3, the controller 38 determines an exposure value for a shot on the basis of the photometric value calculated by the digital signal processor 44.")

And each of the remaining references provided in Exhibits F1-F8 seek ways of improving image capture techniques by, for example, using multiple image sensors and multiple optics components:

- Stanford Camera Array, Wilburn at 765 ("In this paper, we describe a unique array of 100 custom video cameras that we have built, and we summarize our experiences using this array in a range of imaging applications."), 766 ("Since our goal was to create a general purpose system, we wanted tight control over both the timing of cameras and their positions. We also needed to be able to record the data from all the cameras, but

with far fewer PCs than the Virtualized Reality™ system."), 767 ("Camera Tiles. One of the most critical decisions for the array was the choice of image sensors and their optical systems. While we thought it was reasonable to assume that computation would continue to get cheaper, we found it more difficult to make that same argument for high-quality lenses. Thus, we choose to use inexpensive lenses and optics as well as inexpensive sensors.")

- UltraCam, UltraCam Brochure at 1 ("VEXCEL'S REVOLUTIONARY ULTRACAM digital camera system delivers large format aerial imagery that is radiometrically and geometrically superior to images captured by conventional film cameras at a comparable price."), UltraCam Story at 1 ("The UltraCam-project created a novel Large Format Digital Aerial Camera. It was inspired by the ISPRS Congress 2000 in Amsterdam. The search for a promising imaging idea succeeded in May 2001, defining a tiling approach with multiple lenses and multiple area CCD arrays to assemble a seamless and geometrically stable monolithic photogrammetric aerial large format image.")

- Ginosar, 1:28-40 ("The present invention seeks to provide improved video image enhancement apparatus which overcomes limitations of the prior art apparatus and techniques discussed above. There is thus provided in accordance with a preferred embodiment of the present invention, video imaging apparatus including apparatus for providing a plurality of video images of a scene at different exposure levels and apparatus for processing the plurality of video images to produce a combined video image including image information from the plurality of video images and including enhanced detail at local areas therein."), 6:33-41 ("Reference is now made to FIG. 3 which illustrates an alternative embodiment of the present invention wherein multiple cameras 70 are employed, each acquiring the same image at a different exposure level.")

Combining the prior art identified in Exhibits F1-F8 with any one of the above exemplary Incident Light References would have amounted to applying a known technique to a known device ready for improvement to yield predictable results. Furthermore, the prior art and exemplary Incident Light References are in the same field of endeavor (*e.g.*, cameras) and given the design needs (*e.g.*, improving image capturing techniques), combined with a finite number of identified, predictable solutions (*e.g.*, expanding beyond existing single sensor, single lens methods while still controlling integration time of the sensors), a POSITA would have been motivated to combine the teachings of these references.

Alternatively, each of the references provided in Exhibits F1-F8 alone renders this element obvious, in view of the knowledge and skill of a POSITA. That is, it would have been obvious in the view of one of ordinary skill in the art to add the above limitations to any one or more of the references provided in Exhibits F1-F8. A POSITA would have been motivated to incorporate controlling integration time based on incident light level for each sensor into existing cameras, and such a combination would have been within that person's skill. As demonstrated in the exemplary Incident Light References listed above, controlling integration time based on incident light level was well-known in the art by the time of the Asserted Patents' claimed invention and thus, adding it to any one or more of the references provided in Exhibits F1-F8 would have amounted to applying a known technique to a known device ready for improvement to yield predictable results.

G. The '500 and '153 Patents

NAME	DESCRIPTION:					
	The Single Physical Channel Reference	The Multi-level TPC Command References	The At Least Two Values Up or At Least Two Values Down References	The Indication that TPC Accumulation is Enabled References	The Pre-defined TPC Values References	The Uplink Shared Channel References
Khan	✓					
Andersson		✓	✓		✓	
Burt		✓				
Chambers		✓	✓			
Tong		✓	✓		✓	
Baker		✓	✓	✓		
Krishnan				✓		
Dick						✓
Iochi	✓					
25.221 v6.1.0	✓					✓
25.224 v6.1.0				✓	✓	
25.331 v6.1.0				✓		
25.896 v6.0.0	✓					
R1-030067	✓					

1. The Single Physical Channel References

The Single Physical Channel References are: Khan, Iochi, 25.221 v6.1.0, 25.896 v6.0.0, and R1-030067. The relevant claims and/or claim elements of the Single Physical Channel References are identified below:

Patent	Claim	Claim Language
’500	11	“the processor and the receiver are configured to receive, on a single physical channel, an allocation of an uplink resource and a multi-level transmit power control (TPC) command”
’500	16	“wherein the single physical channel is associated with a spreading factor or a code division multiple access (CDMA) code”
’153	1	“the receiver to receive, from the network device, on a single physical channel, scheduling information and power control information that includes a multi-level TPC command”

To the extent Intellectual Ventures contends that an anticipatory reference in Exhibits G1-G15 and J1-J15 fails to disclose these claims and/or claim elements, such reference can be combined with the corresponding disclosures from any one or more of the Single Physical Channel References to render it obvious under 35 U.S.C. § 103(a), at least based on Intellectual Ventures’ Infringement Contentions, apparent claim constructions, and application of the claims to the Accused Instrumentalities, as best as they can be deciphered.

One of ordinary skill in the art would have been motivated to combine any one or more of the references provided in Exhibits G1-G15 and J1-J15 with any one or more of the above exemplary Single Physical Channel References to improve the function and utility of the same, and such a combination would have been within that person’s skill. For example, each of the Single Physical Channel References describe techniques for sending control information including transmit power control information from a base station to a UE over the same physical channel used for sending control information including scheduling information:

- Khan, [0012] ("For the purposes of the present invention, the control information transmitted for the reverse link may include at least one scheduling grant(s), and/or transmit power control ("TPC") information and/or user identification information (e.g., AT ID) and/or rate indication information and/or HARQ control information".).

- Iochi, 3:31-40 ("The channel decoding section 24 carries out decoding processing such as error correcting decoding on the output signal of the demodulation section 23 and extracts received data, downlink transmit power control command (DL-TPC), etc. The received data is sent to a higher level control station and the DL-TPC is sent to the transmit power control section 16.")

- 25.221 v6.1.0, page 61 ("The RACH is mapped onto PRACH. More than one slot per frame may be administered for the PRACH. The location of slots allocated to PRACH is broadcast on the BCH. The uplink sync codes (SYNC-UL sequences) used by the UEs for UL synchronization have a well known association with the P-RACHs, as broadcast on the BCH. On the PRACH, both power control and uplink synchronization control are used.")

- 25.896 v6.0.0, 7.1.2.3 ("Instead of a Node-B continously controlling each UE's TFCS by sending up/down adjustments to a pointer, the Node-B sends a TFCS indicator (which could be a pointer e.g.) in the signaled scheduling assignment. The scheduling assignment also indicates the scheduling time interval over which the UE must transmit given it has non-zero buffer occupancy. The TFCS indicator specifies the TFC(s) corresponding to the highest rate/power level the UE is allowed to transmit at during the specified time interval. After the scheduled time interval has elapsed, the TFCS reverts back to the set that existed prior to the scheduled time interval. A scheduled UE is allowed to choose among the TFCs in the restricted TFCS in terms of rate and power as determined by the TFCS indicator and based upon its own status e.g. actual available power and latest buffer status. In addition, UE may also choose rate, power and transport format based on CM. CM gives UEs information about their standing among other UEs in terms of relative congestion of buffer data and relative QoS or latency to the destination. The rates used by the UE could be signaled on the associated uplink signalling channel e.g. E-DPCCH at the time of transmission. Uplink power control information received by each UE may be used to effectively adjust the TFCS indicator over the scheduling interval.")

- R1-030067 at 1, page 1 ("Each Node-B then uses reverse link interference level, UE scheduling information, and power control information to determine each UE's maximum allowed power margin target. Power margin is defined as the difference between the current DPCCH power level and the maximum power level supported by the UE. An active set Node-B chooses a UE to be scheduled and then sends a scheduling assignment on a downlink scheduling assignment control channel to the chosen UE. The scheduling assignment may consist of the maximum allowed 'power margin' target (note: this is equivalent to specifying a maximum data transmission rate), a map of the allowed EUDCH sub-frame (2ms e.g.) transmission intervals for the next 10ms transmission interval .")

And each of the remaining references provided in Exhibits G1-G15 and J1-J15 seek ways of improving downlink channel utilization:

- Anderson, 9:12-24 ("FIG. 5 illustrates a sample power control message format that may be used in accordance with an example embodiment of the present invention. A dedicated physical control channel (DPCCH) is shown which is divided into 72 frames corresponding to a 720 msec recycle time period. Each 10 msec frame is made up of 16 time slots each lasting 0.625 msec. Each DPCCH time slot may include a pilot field used for synchronization, a traffic power control (TPC) command which may include a command to increase, decrease, or maintain transmit power, a power control indicator or flag, and other bits. This type of transmit power control message may be sent in the uplink direction and downlink direction of the dedicated physical control channel.")

- Zeira, 4:10-30 ("For use in estimating the path loss between the receiving and transmitting stations 50, 52 and sending data, the receiving station 50 sends a communication to the transmitting station 58, step 40. The communication may be sent on any one of various channels. Typically, in a TDD system, the channels used for estimating path loss are referred to as reference channels, although other channels may be used. If the receiving station 50 is a base station 30 1, the communication is preferably sent over a downlink common channel or a common control physical channel (CCPCH). Data to be communicated to the transmitting station 52 over the reference channel is referred to as reference channel data. The reference data may include, as shown, the interference level, I_{RS} multiplexed with other reference data, such as the transmission power level of the reference channel, TRS. The interference level, I_{RS}, and reference channel power level, T_{RS}, may be sent in other channels, such as a signaling channel. The closed loop power control command, b_{TPC}, is typically sent in a dedicated channel. The dedicated channel is dedicated to the communication between the receiving station 50 and transmitting station 52, step 40.")

- 25.224 v6.1.0, page 25 ("The initial transmission power for uplink DPCH and PUSCH is set by higher layers based on open loop power control as described in [15]. The UE then transits into closed loop power control. The node B shall generate TPC commands according to a quality target set by higher layers in order to instruct an increase or decrease in the level of transmission power from the UE and send them in the TPC field of associated downlink CCTrCHs (see [8] for a description of the mapping between DL associated TPC symbols and UL controlled CCTrCH/timeslots). If the physical channel power shall be increased, the TPC command is set to "up", whereas if the power shall be reduced the command is set to "down". A TPC command sent in a downlink CCTrCH controls all uplink DPCHs and PUSCHs in the associated uplink CCTrCH and timeslot. An example of SIR based UL power control is given in annex A2. At the UE when the TPC command is judged as 'down', the mobile transmit power shall be reduced by one power control step, whereas if it is judged as 'up', the mobile transmit power shall be raised by one power control step.")

Chambers, pages 3-4 ("One embodiment of the invention will now be described by way of example only with reference to the accompanying drawings in which; Figure 1 is a diagram showing the frame structure in a known UTRA FDD downlinkDedicated Physical Channel' (I)PCH); Figure 2 is a diagram showing the frame structure in a known system as required for frame division in so-called 'mid-slot' mode 4 (there are also 'end-slot' modes not shown, which are known to the cognoscenti and to which the invention may be applied as will be readily apparent to those skilled in the art); Figure 3 is diagram showing the structure of a slot of a divided frame as used in a system according to the invention; Figure 4 is a table showing a command protocol which may be assigned to the slot structure as shown in Figure 3; Figure 5 is a block circuit diagram of a mobile radio system, and; Figure 6 is a block circuit diagram of a transmit power control unit for use in the system of Figure 5 and including an enhanced TPC decoder responsive to the slot structure of Figure 3.")Combining the prior art identified in Exhibits G1-G15 and J1-J15 with any one of the above exemplary Single Physical Channel References would have amounted to applying a known technique to a known device ready for improvement to yield predictable results. Furthermore, the prior art and exemplary Single Physical Channel References are in the same field of endeavor (*e.g.*, methods and systems for power control in wireless network) and given the design needs (*e.g.*, improving power control techniques), combined with a finite number of identified, predictable solutions (*e.g.*, expanding beyond existing power control methods), a POSITA would have been motivated to combine the teachings of these references.

Alternatively, each of the references provided in Exhibits G1-G15 and J1-J15 alone renders this element obvious, in view of the knowledge and skill of a POSITA. That is, it would have been obvious in the view of one of ordinary skill in the art to add the above limitations to any one or more of the references provided in Exhibits G1-G15 and J1-J15. A POSITA would have been

motivated to incorporate sending control information including transmit power control information from a base station to a UE over the same physical channel used for sending control information including scheduling information, and such a combination would have been within that person's skill. As demonstrated in the exemplary Single Physical Channel References listed above, sending control information, including scheduling grants and transmit power control information for reverse link transmission was well-known in the art by the time of the Asserted Patents' claimed invention and thus, adding it to any one or more of the references provided in Exhibits G1-G15 and J1-J15 would have amounted to applying a known technique to a known device ready for improvement to yield predictable results.

2. The Multi-level TPC Command References

The Multi-level TPC Command References are: Andersson, Burt, Chambers, Tong, and Baker. The relevant claims and/or claim elements of the Multi-level TPC Command References are identified below:

Patent	Claim	Claim Language
'500	11	"a multi-level transmit power control (TPC) command"
'500	11	"determine a transmission power level based on a value of the multi-level TPC command out of a plurality of potential values for the multi-level TPC command"
'500	11	"wherein the plurality of potential values for the multi-level TPC command includes at least two values up or at least two values down"
'153	1	"power control information that includes a multi-level TPC command"
'153	1	"the transmitter to transmit, to the network device, an uplink signal based on the received scheduling information and the multi-level TPC command"
'153	5	"wherein the multi-level TPC command includes a set of values that includes at least two values up or at least two values down"

To the extent Intellectual Ventures contends that an anticipatory reference in Exhibits G1-G15 and J1-J15 fails to disclose these claims and/or claim elements, such reference can be combined with the corresponding disclosures from any one or more of the Multi-level TPC Command References

to render it obvious under 35 U.S.C. § 103(a), at least based on Intellectual Ventures' Infringement Contentions, apparent claim constructions, and application of the claims to the Accused Instrumentalities, as best as they can be deciphered.

One of ordinary skill in the art would have been motivated to combine any one or more of the references provided in Exhibits G1-G15 and J1-J15 with any one or more of the above exemplary Multi-level TPC Command References to improve the function and utility of the same, and such a combination would have been within that person's skill. For example, the Multi-level TPC Command References describe the following techniques:

- Andersson, 8:38-59 ("The TPC commands may include one or more bits which indicate a desired increase in transmit power, a desired decrease in transmit power, or in some cases no change in transmit power. Of course, any number of bits or bit assignments is possible.")

- Burt, 6:5-21 ("An NIU computer 61 receives a message stream sent from the base station signal processor 15. The message is addressable to individual subscriber stations to speed-up convergence during power-on or transient recovery. A broadcast message may be sent from the base station 11 in which all subscriber stations 13 respond. A principle message is the value for the subscriber station transmit power. Two other messages are "increment" and "disincrement" subscribers station transmit power").

- Chambers, page 3 ("The mobile terminals may each comprise two TPC decoders one of which is used to control transmission power during normal undivided frames in response to 2 TPC bits, the other of which being the enhanced TPC decoder responsive to 4 TPC bits. The coding protocol used may be such that in each 4 bit set, the presence of 3 or 4 bits of one sense is deemed to designate a power increase command, whilst the presence 3 or 4 bits of an opposite sense is deemed to designate a power decrease command, and the presence of the same number of bits of each sense is designated to mean 'nothing'. Thus in each 4 bit set the presence of 3 or 4 '1' bits may be deemed to designate a power increase command, whilst the presence of 3 or 4 '0' bits may be deemed to designate a power decrease command, whilst the presence of the same number of bits of each sense is designated to mean 'nothing'. Within this coding protocol, 4 identical bits, V or 'l' may be deemed to designate either 'power up more' or 'power down more', as the case may be.")

- Tong, 3:28-43 ("In another embodiment of the invention, a system is provided for controlling transmission power of a mobile unit in a wireless communication system. The system includes a mobile unit which includes a module for receiving groups of power control bits. A first set of the plurality of power control bits indicates that the transmission power should be increased by a predetermined amount. Another set of the

power control bits indicates that the transmission power should be increased by an amount which is greater than the predetermined amount. The system further includes a module for increasing the transmission power by the predetermined amount in response to receiving the first set of power control bits and, a module for increasing the transmission power by the amount which is greater than the predetermined amount in response to receiving the another set of power control bits.")

- Baker, [0021]-[0022] ("In a UMTS system as presently specified, the aim of the uplink power control is to maintain the Signal-to-Interference Ratio (SIR) of the signal received by the BS 100 at a given target level by instructing the MS 110 to is alter its transmission power. These instructions are conveyed by two-state Transmit Power Control (TPC) commands, transmitted once per time slot (there being 15 time slots per 10 ms frame). The size of steps is controlled by two parameters, PCA (Power Control Algorithm) and ΔTPC (uplink Transmit Power Control step size), resulting in the availability of three effective power control step sizes. When the value of PCA is 1, ΔTPC can take a value of 1 or 2. If a received TPC command is "0" then the MS 110 reduces its transmission power by ΔTPC dB, while if the received command is "1" the MS 110 increases its transmission power by ΔTPC dB.")

And each of the remaining references provided in Exhibits G1-G15 and J1-J15 seek ways of improving transmit power control:

- Zeira, ("For use in estimating the path loss between the receiving and transmitting stations 50, 52 and sending data, the receiving station 50 sends a communication to the transmitting station 58, step 40. The communication may be sent on any one of various channels. Typically, in a TDD system, the channels used for estimating path loss are referred to as reference channels, although other channels may be used. If the receiving station 50 is a base station 30 1, the communication is preferably sent over a downlink common channel or a common control physical channel (CCPCH). Data to be communicated to the transmitting station 52 over the reference channel is referred to as reference channel data. The reference data may include, as shown, the interference level, I_{RS} multiplexed with other reference data, such as the transmission power level of the reference channel, TRS. The interference level, I_{RS}, and reference channel power level, T_{RS}, may be sent in other channels, such as a signaling channel. The closed loop power control command, b_{TPC}, is typically sent in a dedicated channel. The dedicated channel is dedicated to the communication between the receiving station 50 and transmitting station 52, step 40.")

- 25.224 v6.1.0, 4.2.1 ("Power control is applied for the TDD mode to limit the interference level within the system thus reducing the intercell interference level and to reduce the power consumption in the UE."); 4.2.2.1 ("During the operation of the uplink power control procedure the UE transmit power shall not exceed a maximum allowed value which is the lower out of the maximum output power of the terminal power class and a value which may be set by higher layer signalling. Uplink power control shall be performed while the total UE transmit power is below the maximum allowed output power. In some cases the total UE transmit power in a timeslot after

> uplink power control calculation might exceed the maximum allowed output power. In these cases the calculated transmit power of all uplink physical channels in this timeslot shall be scaled by the same amount in dB before transmission. The total UE transmission power used shall be the maximum allowed output power.")

Combining the prior art identified in Exhibits G1-G15 and J1-J15 with any one of the above exemplary Multi-level TPC Command References would have amounted to applying a known technique to a known device ready for improvement to yield predictable results. Furthermore, the prior art and exemplary Multi-level TPC Command References are in the same field of endeavor (*e.g.*, methods and systems for power control in wireless network) and given the design needs (*e.g.*, improving power control techniques), combined with a finite number of identified, predictable solutions (*e.g.*, expanding beyond existing power control methods), a POSITA would have been motivated to combine the teachings of these references.

Alternatively, each of the references provided in Exhibits G1-G15 and J1-J15 alone renders this element obvious, in view of the knowledge and skill of a POSITA. That is, it would have been obvious in the view of one of ordinary skill in the art to add the above limitations to any one or more of the references provided in Exhibits G1-G15 and J1-J15. A POSITA would have been motivated to incorporate the use of the transmit power control commands disclosed in the Multi-level TPC Command References into existing power control techniques, and such a combination would have been within that person's skill. As demonstrated in the exemplary Multi-level TPC Command References listed above, use of power control commands was well-known in the art by the time of the Asserted Patents' claimed invention and thus, adding it to any one or more of the references provided in Exhibits G1-G15 and J1-J15 would have amounted to applying a known technique to a known device ready for improvement to yield predictable results.

3. The At Least Two Values Up or At Least Two Values Down References

The At Least Two Values Up or At Least Two Values Down References are: Andersson, Chambers, Tong, and Baker. The relevant claims and/or claim elements of the At Least Two Values Up or At Least Two Values Down References are identified below:

Patent	Claim	Claim Language
’500	11	“wherein the plurality of potential values for the multi-level TPC command includes at least two values up or at least two values down”
’153	5	“herein the multi-level TPC command includes a set of values that includes at least two values up or at least two values down”

To the extent Intellectual Ventures contends that an anticipatory reference in Exhibits G1-G15 and J1-J15 to disclose these claims and/or claim elements, such reference can be combined with the corresponding disclosures from any one or more of the At Least Two Values Up or At Least Two Values Down References to render it obvious under 35 U.S.C. § 103(a), at least based on Intellectual Ventures’ Infringement Contentions, apparent claim constructions, and application of the claims to the Accused Instrumentalities, as best as they can be deciphered.

One of ordinary skill in the art would have been motivated to combine any one or more of the references provided in Exhibits G1-G15 and J1-J15 with any one or more of the above exemplary At Least Two Values Up or At Least Two Values Down References to improve the function and utility of the same, and such a combination would have been within that person’s skill. For example, each of the At Least Two Values Up or At Least Two Values Down References describe the use of at least two values for increasing power or two values for decreasing power:

- Andersson, 8:38-59 (“The TPC commands may include one or more bits which indicate a desired increase in transmit power, a desired decrease in transmit power, or in some cases no change in transmit power. Of course, any number of bits or bit assignments is possible.”)
- Chambers, page 3 (“The mobile terminals may each comprise two TPC decoders one of which is used to control transmission power during normal undivided frames in response to 2 TPC bits, the other of which being the enhanced TPC decoder responsive

to 4 TPC bits. The coding protocol used may be such that in each 4 bit set, the presence of 3 or 4 bits of one sense is deemed to designate a power increase command, whilst the presence 3 or 4 bits of an opposite sense is deemed to designate a power decrease command, and the presence of the same number of bits of each sense is designated to mean 'nothing'. Thus in each 4 bit set the presence of 3 or 4 '1' bits may be deemed to designate a power increase command, whilst the presence of 3 or 4 '0' bits may be deemed to designate a power decrease command, whilst the presence of the same number of bits of each sense is designated to mean 'nothing'. Within this coding protocol, 4 identical bits, V or 'l' may be deemed to designate either 'power up more' or 'power down more', as the case may be.")Tong, 3:28-43 ("In another embodiment of the invention, a system is provided for controlling transmission power of a mobile unit in a wireless communication system. The system includes a mobile unit which includes a module for receiving groups of power control bits. A first set of the plurality of power control bits indicates that the transmission power should be increased by a predetermined amount. Another set of the power control bits indicates that the transmission power should be increased by an amount which is greater than the predetermined amount. The system further includes a module for increasing the transmission power by the predetermined amount in response to receiving the first set of power control bits and, a module for increasing the transmission power by the amount which is greater than the predetermined amount in response to receiving the another set of power control bits.")Baker, [0022] ("The size of steps is controlled by two parameters, PCA (Power Control Algorithm) and ΔTPC (uplink Transmit Power Control step size), resulting in the availability of three effective power control step sizes. When the value of PCA is 1, ΔTPC can take a value of 1 or 2. If a received TPC command is "0" then the MS 110 reduces its transmission power by ΔTPC dB, while if the received command is "1" the MS 110 increases its transmission power by ΔTPC dB.")

And each of the remaining references provided in Exhibits G1-G15 and J1-J15 seek ways of improving transmit power control:

- Zeira, Abstract ("Combined closed loop/open loop power control controls transmission power levels in a spread spectrum time division duplex communication station. The first station transmits power commands based on in part a reception quality of the received communications. The first station transmits a first communication having transmission power commands based on in part a reception quality of the received communications. The first station transmits a first communication having a transmission power level in a first time slot. The second station received the first communication and the power commands. A power level of the first communication as received is measured. A path loss estimate is determined based on in part the measured received first communication power level and the first communication transmission power level. The second station transmits a first communication to the first station in a first time slot. The second communication transmission power level is set based on in part the path loss estimate weighted by a factor and power commands. The factor is a function of a time separation of the first and second time slots."); 1:8-11 ("[T[he present

invention relates to a system and method for controlling transmission power within TDD communication systems.")

- 25.224 v6.1.0, 4.2.1 ("Power control is applied for the TDD mode to limit the interference level within the system thus reducing the intercell interference level and to reduce the power consumption in the UE."); 4.2.2.1 ("During the operation of the uplink power control procedure the UE transmit power shall not exceed a maximum allowed value which is the lower out of the maximum output power of the terminal power class and a value which may be set by higher layer signalling. Uplink power control shall be performed while the total UE transmit power is below the maximum allowed output power. In some cases the total UE transmit power in a timeslot after uplink power control calculation might exceed the maximum allowed output power. In these cases the calculated transmit power of all uplink physical channels in this timeslot shall be scaled by the same amount in dB before transmission. The total UE transmission power used shall be the maximum allowed output power.")

Combining the prior art identified in Exhibits G1-G15 and J1-J15 with any one of the above exemplary At Least Two Values Up or At Least Two Values Down References would have amounted to applying a known technique to a known device ready for improvement to yield predictable results. Furthermore, the prior art and exemplary At Least Two Values Up or At Least Two Values Down References are in the same field of endeavor (*e.g.*, methods and systems for power control in wireless network) and given the design needs (*e.g.*, improving power control techniques), combined with a finite number of identified, predictable solutions (*e.g.*, expanding beyond existing power control methods), a POSITA would have been motivated to combine the teachings of these references.

Alternatively, each of the references provided in Exhibits G1-G15 and J1-J15 alone renders this element obvious, in view of the knowledge and skill of a POSITA. That is, it would have been obvious in the view of one of ordinary skill in the art to add the above limitations to any one or more of the references provided in Exhibits G1-G15 and J1-J15. A POSITA would have been motivated to incorporate the use of at least two values for increasing power or two values for decreasing power into existing power control techniques, and such a combination would have been within that person's skill. As demonstrated in the exemplary At Least Two Values Up or At Least

Two Values Down References listed above use of at least two values for increasing power or two values for decreasing power was well-known in the art by the time of the Asserted Patents' claimed invention and thus, adding it to any one or more of the references provided in Exhibits G1-G15 and J1-J15 would have amounted to applying a known technique to a known device ready for improvement to yield predictable results.

4. The Indication that TPC Accumulation is Enabled References

The Indication that TPC Command Accumulation is Enabled References are: Baker, Krishnan, 25.224 v6.1.0, and 25.331 v6.1.0. The relevant claims and/or claim elements of the Indication that TPC Command Accumulation is Enabled References are identified below:

Patent	Claim	Claim Language
'500	12	"wherein the processor is further configured to receive an indication as to whether accumulation of TPC commands is enabled."
'500	13	"accumulate the TPC command with another TPC command in response to enablement of accumulation of TPC commands"
'153	1	"the receiver to receive, from a network device, an indication that transmit power control (TPC) command accumulation is enabled"

To the extent Intellectual Ventures contends that an anticipatory reference in Exhibits G1-G15 and J1-J15 fails to disclose these claims and/or claim elements, such reference can be combined with the corresponding disclosures from any one or more of the Indication that TPC Accumulation is Enabled References to render it obvious under 35 U.S.C. § 103(a), at least based on Intellectual Ventures' Infringement Contentions, apparent claim constructions, and application of the claims to the Accused Instrumentalities, as best as they can be deciphered.

One of ordinary skill in the art would have been motivated to combine any one or more of the references provided in Exhibits G1-G15 and J1-J15 with any one or more of the above exemplary Indication that TPC Accumulation is Enabled References to improve the function and utility of the same, and such a combination would have been within that person's skill. For

example, each of the Indication that TPC Command Accumulation is Enabled References describe techniques for transmitting an indication that transmit power control accumulation is enabled:

- Baker, [0022]-[0023] ("When the value of PCA is 1, ΔTPC can take a value of 1 or 2. If a received TPC command is "0" then the MS 110 reduces its transmission power by ΔTPC dB, while if the received command is "1" the MS 110 increases its transmission power by ΔTPC dB. When the value of PCA is 2, ΔTPC can only take the value of 1 and the MS 110 combines TPC commands in groups of five. If all five TPC commands are "1" the transmission power is increased by ΔTPC dB, if all five TPC commands are "0" the transmission power is decreased by ΔTPC dB, otherwise the transmission power is unchanged.")

- Krishnan, 7:43-48 ("In an embodiment, the receiving terminal sends a feedback signal indicating the status of closed-loop power control, such as an enable/disable bit. In an embodiment, the receiving terminal sends a feedback signal indicating the status of open-loop power control such as enable/disable bit.")

- 25.224 v6.1.0, page 25 ("The initial transmission power for uplink DPCH and PUSCH is set by higher layers based on open loop power control as described in [15]. The UE then transits into closed loop power control. The node B shall generate TPC commands according to a quality target set by higher layers in order to instruct an increase or decrease in the level of transmission power from the UE and send them in the TPC field of associated downlink CCTrCHs (see [8] for a description of the mapping between DL associated TPC symbols and UL controlled CCTrCH/timeslots). If the physical channel power shall be increased, the TPC command is set to "up", whereas if the power shall be reduced the command is set to "down". A TPC command sent in a downlink CCTrCH controls all uplink DPCHs and PUSCHs in the associated uplink CCTrCH and timeslot. An example of SIR based UL power control is given in annex A2. At the UE when the TPC command is judged as 'down', the mobile transmit power shall be reduced by one power control step, whereas if it is judged as 'up', the mobile transmit power shall be raised by one power control step.")

- 25.331 v6.1.0, 8.2.10.3 ("In 1.28 Mcps TDD, if the IE "Uplink DPCH Power Control Info" is transmitted, this information shall be taken into account by the UE for uplink open loop power control and for uplink closed loop power control as described in subclause 8.6.6.11."); 8.6.6.11 ("1> in 1.28 Mcps TDD: 2> if the CHOICE UL OL PC info is set to 'Broadcast UL OL PC info': 3> set the variable INVALID_CONFIGURATION to true. 2> if the IE "Uplink DPCH power control info"is included in the UPLINK PHYSICAL CHANNEL CONTROL message: 3> use the TPC step size for the closed loop power control of the CCTrCH identified in the message, replacing the existing value used for the CCTrCH. 3> if the IE " UL target SIR " is included: 4> use this value for parameter PRXDPCHdes for open loop power control of the CCTrCH identified in the message in the case of a transition from closed loop to open loop power control as specified in [33]. 2> if the IE "Uplink DPCH power control info" is included in the IE "Uplink DPCH info": 3> use the TPC step size for the closed loop power control of all CCTrCH added or reconfigured

by the IE replacing any existing values used for the CCTrCHs; 3> if the IE " UL target SIR " is included ignore the parameter.")

And each of the remaining references provided in Exhibits G1-G15 and J1-J15 seek ways of improving transmit power control:

- Anderson, 2:61-3:3 ("Transmit power control (TPC) is therefore important in any mobile radio communications system, and is a particularly significant factor in improving the performance and capacity of a CDMA system. In uplink TPC, the mobile station attempts to control its transmit power based on the power control messages sent to the mobile station from the base station with the goal of controlling the power level of signals received at the base station within a relatively small tolerance, e.g., 1 dB for all mobile station transmissions received at that base station.")

- Zeira, Abstract ("Combined closed loop/open loop power control controls transmission power levels in a spread spectrum time division duplex communication station. The first station transmits power commands based on in part a reception quality of the received communications. The first station transmits a first communication having transmission power commands based on in part a reception quality of the received communications. The first station transmits a first communication having a transmission power level in a first time slot. The second station received the first communication and the power commands. A power level of the first communication as received is measured. A path loss estimate is determined based on in part the measured received first communication power level and the first communication transmission power level. The second station transmits a first communication to the first station in a first time slot. The second communication transmission power level is set based on in part the path loss estimate weighted by a factor and power commands. The factor is a function of a time separation of the first and second time slots."); 1:8-11 ("[T[he present invention relates to a system and method for controlling transmission power within TDD communication systems.")

- Chambers, page 1 ("Cellular mobile radio systems comprise a plurality of cells each having a base station which in operation is arranged in two way communication with mobile terminals which are located, at least for the time being, within the cell with which the base station is associated. In known systems, transmissions from a mobile terminal to a base station are described as 'uplink' transmissions and conversely transmissions from a base station to a mobile terminal are described as 'downlink' transmissions. Downlink transmissions in the UTRA FDD system for example, comprise groups of 72 consecutive frames, each of 10 ms duration, wherein each frame comprises 16 consecutive slots which each include pilot bits, 2 Transmission Power Control (TPC) bits, 2 Transmission Format Indicator (TFI) bits, and data bits.")

Combining the prior art identified in Exhibits G1-G15 and J1-J15 with any one of the above exemplary Indication that TPC Accumulation is Enabled References would have amounted to

applying a known technique to a known device ready for improvement to yield predictable results. Furthermore, the prior art and exemplary Indication that TPC Accumulation is Enabled References are in the same field of endeavor (*e.g.*, methods and systems for power control in wireless network) and given the design needs (*e.g.*, improving power control techniques), combined with a finite number of identified, predictable solutions (*e.g.*, expanding beyond existing power control methods), a POSITA would have been motivated to combine the teachings of these references.

Alternatively, each of the references provided in Exhibits G1-G15 and J1-J15 alone renders this element obvious, in view of the knowledge and skill of a POSITA. That is, it would have been obvious in the view of one of ordinary skill in the art to add the above limitations to any one or more of the references provided in Exhibits G1-G15 and J1-J15. A POSITA would have been motivated to incorporate transmitting an indication that transmit power control accumulation is enabled into existing power control techniques, and such a combination would have been within that person's skill. As demonstrated in the exemplary Indication that TPC Accumulation is Enabled References listed above, transmitting an indication that transmit power control accumulation is enabled was well-known in the art by the time of the Asserted Patents' claimed invention and thus, adding it to any one or more of the references provided in Exhibits G1-G15 and J1-J15 would have amounted to applying a known technique to a known device ready for improvement to yield predictable results.

5. The Pre-defined TPC Values References

The Pre-defined TPC Values References are: Andersson, Tong, and 25.224 v6.1.0. The relevant claims and/or claim elements of the Pre-defined TPC Values References are identified below:

Patent	Claim	Claim Language
’153	2	“wherein the multi-level TPC command includes a value selected from a plurality of pre-defined values.”

To the extent Intellectual Ventures contends that an anticipatory reference in Exhibits G1-G15 and J1-J15 fails to disclose these claims and/or claim elements, such reference can be combined with the corresponding disclosures from any one or more of the Pre-defined TPC Values References to render it obvious under 35 U.S.C. § 103(a), at least based on Intellectual Ventures’ Infringement Contentions, apparent claim constructions, and application of the claims to the Accused Instrumentalities, as best as they can be deciphered.

One of ordinary skill in the art would have been motivated to combine any one or more of the references provided in Exhibits G1-G15 and J1-J15 with any one or more of the above exemplary Pre-defined TPC Values References to improve the function and utility of the same, and such a combination would have been within that person’s skill. For example, each of the Pre-defined TPC Values References describe TPC commands with pre-defined values:

- Andersson, 10-11:40-38 (“The first and second type of power control adjustment may also correspond to first and second types of power control adjustment schemes. For example, in the first type of power control adjustment scheme, the power adjustment is a change of 1 dB each time slot. In the second type of power adjustment control scheme, the first slot corresponds to an adjustment of 2 dB, the second time slot 2 db, the third time slot 4 dB, the fourth time slot 4 dB, the fifth time slot 8 dB, the next time slot 8 dB, the next time slot 4 dB, the next time slot 4 dB and so forth. Table 1 shows an example”)

- Tong, 3:61-4:9 (“A first set of the power control bits indicates a request to increase the transmission power by a predetermined amount. A second set of the power control bits indicates a request to increase the transmission power by an amount which is greater than the predetermined amount. A third set of the power control bits indicates a request to decrease the transmission power by the predetermined amount and, a fourth set of the power control bits indicates a request to decrease the transmission power by the amount which is greater than the predetermined amount”)

- 25.224 v6.1.0, 4.2.1 (discloses “TPC Step size” ad “1dB or 2dB or 3 dB”)

And each of the remaining references provided in Exhibits G1-G15 and J1-J15 seek ways of improving transmit power control:

- Zeira, Abstract ("Combined closed loop/open loop power control controls transmission power levels in a spread spectrum time division duplex communication station. The first station transmits power commands based on in part a reception quality of the received communications. The first station transmits a first communication having transmission power commands based on in part a reception quality of the received communications. The first station transmits a first communication having a transmission power level in a first time slot. The second station received the first communication and the power commands. A power level of the first communication as received is measured. A path loss estimate is determined based on in part the measured received first communication power level and the first communication transmission power level. The second station transmits a first communication to the first station in a first time slot. The second communication transmission power level is set based on in part the path loss estimate weighted by a factor and power commands. The factor is a function of a time separation of the first and second time slots."); 1:8-11 ("[T[he present invention relates to a system and method for controlling transmission power within TDD communication systems.")

- Chambers, page 1 ("Cellular mobile radio systems comprise a plurality of cells each having a base station which in operation is arranged in two way communication with mobile terminals which are located, at least for the time being, within the cell with which the base station is associated. In known systems, transmissions from a mobile terminal to a base station are described as 'uplink' transmissions and conversely transmissions from a base station to a mobile terminal are described as 'downlink' transmissions. Downlink transmissions in the UTRA FDD system for example, comprise groups of 72 consecutive frames, each of 10 ms duration, wherein each frame comprises 16 consecutive slots which each include pilot bits, 2 Transmission Power Control (TPC) bits, 2 Transmission Format Indicator (TFI) bits, and data bits.")

Combining the prior art identified in Exhibits G1-G15 and J1-J15 with any one of the above exemplary Pre-defined TPC Values References would have amounted to applying a known technique to a known device ready for improvement to yield predictable results. Furthermore, the prior art and exemplary Pre-defined TPC Values References are in the same field of endeavor (*e.g.*, methods and systems for power control in wireless network) and given the design needs (*e.g.*, improving power control techniques), combined with a finite number of identified, predictable solutions (*e.g.*, expanding beyond existing power control methods), a POSITA would have been motivated to combine the teachings of these references.

Alternatively, each of the references provided in Exhibits G1-G15 and J1-J15 alone renders this element obvious, in view of the knowledge and skill of a POSITA. That is, it would have been obvious in the view of one of ordinary skill in the art to add the above limitations to any one or more of the references provided in Exhibits G1-G15 and J1-J15. A POSITA would have been motivated to incorporate using TPC commands with pre-defined values into existing power control techniques, and such a combination would have been within that person's skill. As demonstrated in the exemplary Pre-defined TPC Values References listed above, use of TPC commands with pre-defined values was well-known in the art by the time of the Asserted Patents' claimed invention and thus, adding it to any one or more of the references provided in Exhibits G1-G15 and J1-J15 would have amounted to applying a known technique to a known device ready for improvement to yield predictable results.

6. The Uplink Shared Channel References

The Uplink Shared Channel References are: Dick and 25.221 v6.1.0. The relevant claims and/or claim elements of the Uplink Shared Channel References are identified below:

Patent	Claim	Claim Language
'500	14	"wherein the uplink signal is transmitted on an uplink shared channel"
'153	3	"wherein the transmitter is further configured to transmit the uplink signal on an uplink shared channel"

To the extent Intellectual Ventures contends that an anticipatory reference in Exhibits G1-G15 and J1-J15 fails to disclose these claims and/or claim elements, such reference can be combined with the corresponding disclosures from any one or more of the Uplink Shared Channel References to render it obvious under 35 U.S.C. § 103(a), at least based on Intellectual Ventures' Infringement Contentions, apparent claim constructions, and application of the claims to the Accused Instrumentalities, as best as they can be deciphered.

One of ordinary skill in the art would have been motivated to combine any one or more of the references provided in Exhibits G1-G15 and J1-J15 with any one or more of the above exemplary Uplink Shared Channel References to improve the function and utility of the same, and such a combination would have been within that person's skill. For example, each of the Uplink Shared Channel References describe techniques for transmitting uplink signal on an uplink shared channel:

- Dick, [0019] (""The invention provides controlled transmitter power in a wireless communication system in which both dedicated and shared channels are utilized. In one embodiment, outer loop transmission power control is provided for a wireless communication system in which user data is signaled from a network unit in both shared channels available to unspecified wireless transmit receive units (WTRUs) and dedicated channels that are assigned for use by a specific WTRU in which the WTRU transmits data signals on an uplink dedicated channel (UL DCH) and sporadically transmits data signals on an associated uplink shared channel (UL SCH). The network unit preferably has a receiver for receiving UL user data from WTRUs on UL DCHs and at least one UL SCH and a processor for computing target metrics for UL DCHs based on the reception of signals transmitted by a WTRU on an UL DCH associated with an UL SCH usable by the WTRU. A shared channel target metric generator is provided that is confirmed to output a respective UL SCH target metric derived from each computed UL DCH target metric. Each WTRU preferably has a processor which computes transmit power adjustments as a function of target metrics for UL channels. The WTRU processors are preferably confirmed to compute UL DCH power adjustments for an UL DCH associated with an UL SCH as a function of UL DCH target metrics computed by the network unit based on the reception of signals transmitted by the WTRU on the UL DCH and UL SCH power adjustments for the associated UL SCH as a function of the respective UL SCH target metrics output from the shared channel target metric generator. Each WTRU also has a transmitter operatively associated with the WTRU's processor for transmitting user data on the UL DCH and associated UL SCH at respective power levels corresponding to respective computed UL DCH and UL SCH power adjustments.")

- 25.221 v6.1.0, page 11 ("4.1.2.5 USCH - Uplink Shared Channel / The uplink shared channel (USCH) is an uplink transport channel shared by several UEs carrying dedicated control or traffic data.")

And each of the remaining references provided in Exhibits G1-G15 and J1-J15 seek ways of improving uplink channel utilization:

- Anderson, 9:12-24 ("FIG. 5 illustrates a sample power control message format that may be used in accordance with an example embodiment of the present invention. A

dedicated physical control channel (DPCCH) is shown which is divided into 72 frames corresponding to a 720 msec recycle time period. Each 10 msec frame is made up of 16 time slots each lasting 0.625 msec. Each DPCCH time slot may include a pilot field used for synchronization, a traffic power control (TPC) command which may include a command to increase, decrease, or maintain transmit power, a power control indicator or flag, and other bits. This type of transmit power control message may be sent in the uplink direction and downlink direction of the dedicated physical control channel.")

- Zeira, 4:10-30 ("For use in estimating the path loss between the receiving and transmitting stations 50, 52 and sending data, the receiving station 50 sends a communication to the transmitting station 58, step 40. The communication may be sent on any one of various channels. Typically, in a TDD system, the channels used for estimating path loss are referred to as reference channels, although other channels may be used. If the receiving station 50 is a base station 30 1, the communication is preferably sent over a downlink common channel or a common control physical channel (CCPCH). Data to be communicated to the transmitting station 52 over the reference channel is referred to as reference channel data. The reference data may include, as shown, the interference level, I_{RS} multiplexed with other reference data, such as the transmission power level of the reference channel, TRS. The interference level, I_{RS}, and reference channel power level, T_{RS}, may be sent in other channels, such as a signaling channel. The closed loop power control command, b_{TPC}, is typically sent in a dedicated channel. The dedicated channel is dedicated to the communication between the receiving station 50 and transmitting station 52, step 40.")

- 25.224 v6.1.0, page 25 ("The initial transmission power for uplink DPCH and PUSCH is set by higher layers based on open loop power control as described in [15]. The UE then transits into closed loop power control. The node B shall generate TPC commands according to a quality target set by higher layers in order to instruct an increase or decrease in the level of transmission power from the UE and send them in the TPC field of associated downlink CCTrCHs (see [8] for a description of the mapping between DL associated TPC symbols and UL controlled CCTrCH/timeslots). If the physical channel power shall be increased, the TPC command is set to "up", whereas if the power shall be reduced the command is set to "down". A TPC command sent in a downlink CCTrCH controls all uplink DPCHs and PUSCHs in the associated uplink CCTrCH and timeslot. An example of SIR based UL power control is given in annex A2. At the UE when the TPC command is judged as 'down', the mobile transmit power shall be reduced by one power control step, whereas if it is judged as 'up', the mobile transmit power shall be raised by one power control step.")

- Chambers, pages 3-4 ("Cellular mobile radio systems comprise a plurality of cells each having a base station which in operation is arranged in two way communication with mobile terminals which are located, at least for the time being, within the cell with which the base station is associated. In known systems, transmissions from a mobile terminal to a base station are described as 'uplink' transmissions and conversely transmissions from a base station to a mobile terminal are described as 'downlink' transmissions. Downlink transmissions in the UTRA FDD system for example, comprise groups of 72 consecutive frames, each of 10 ms duration, wherein each frame

comprises 16 consecutive slots which each include pilot bits, 2 Transmission Power Control (TPC) bits, 2 Transmission Format Indicator (TFI) bits, and data bits.")

Combining the prior art identified in Exhibits G1-G15 and J1-J15 with any one of the above exemplary Uplink Shared Channel References would have amounted to applying a known technique to a known device ready for improvement to yield predictable results. Furthermore, the prior art and exemplary Uplink Shared Channel References are in the same field of endeavor (*e.g.*, methods and systems for power control in wireless network) and given the design needs (*e.g.*, improving power control techniques), combined with a finite number of identified, predictable solutions (*e.g.*, expanding beyond existing power control methods), a POSITA would have been motivated to combine the teachings of these references.

Alternatively, each of the references provided in Exhibits G1-G15 and J1-J15 alone renders this element obvious, in view of the knowledge and skill of a POSITA. That is, it would have been obvious in the view of one of ordinary skill in the art to add the above limitations to any one or more of the references provided in Exhibits G1-G15 and J1-J15. A POSITA would have been motivated to incorporate transmitting uplink signal on an uplink shared channel into existing wireless networks with power control, and such a combination would have been within that person's skill. As demonstrated in the exemplary Uplink Shared Channel References listed above, transmitting uplink signal on an uplink shared channel was well-known in the art by the time of the Asserted Patents' claimed invention and thus, adding it to any one or more of the references provided in Exhibits G1-G15 and J1-J15 would have amounted to applying a known technique to a known device ready for improvement to yield predictable results.

H. The '416 Patent

NAME	DESCRIPTION:				
	The Physical Shared	The Signal Monitoring References	The Shared Frame References	The Two or More Timeslots References	The Power Down References

	Channel References				
Kim 814	✓	✓	✓	✓	✓
Vayanos		✓			✓
Cave		✓			✓
Kim 297	✓	✓	✓	✓	✓
Yamada	✓	✓			✓
Lee		✓			✓

1. The Physical Shared Channel References

The Physical Shared Channel References are: Kim 814, Kim 297, and Yamada. The relevant claims and/or claim elements of the Physical Shared Channel References are identified below:

Patent	Claim	Claim Language
’416	1[b]	“wherein each of the plurality of bits indicates a respective time interval that physical shared channel resources are utilized to signal channels; and”

To the extent Intellectual Ventures contends that an anticipatory reference in Exhibits H1-H9 fails to disclose these claims and/or claim elements, such reference can be combined with the corresponding disclosures from any one or more of the Physical Shared Channel References to render it obvious under 35 U.S.C. § 103(a), at least based on Intellectual Ventures’ Infringement Contentions, apparent claim constructions, and application of the claims to the Accused Instrumentalities, as best as they can be deciphered.

One of ordinary skill in the art would have been motivated to combine any one or more of the references provided in Exhibits H1-H9 with any one or more of the above exemplary Physical Shared Channel References to improve the function and utility of the same, and such a combination would have been within that person’s skill. For example, each of the Physical Shared Channel References describe techniques for using physical shared channel resources to configure a paging channel:

- Kim 814 5:34-37 ("A scheduler performs scheduling on broadcasting channel (BCH) information formed based on a radio frame unit, paging message information and traffic information to be transmitted to the terminals on the basis of TTI at step S330.")

- Kim 297, 9:32-40 ("Meanwhile, category-A scheduling information transmitted to a random UE can include bitmap information for indicating RBs used in transmitting downlink data packet to the corresponding UE or RBs used in enabling the UE to transmit uplink data packet. Namely, when N RBs exist within a single TTI, each bit within N-bit bitmap information is mapped by a preset rule with a corresponding RB existing within the TTI. And, the bit can represent information about whether a corresponding RB is allocated to data.")

- Yamada, 3:63-4:03 ("The high-speed physical downlink shared channel HS-PDSCH of the HSDPA mode is a downlink shared channel shared by a plurality of mobile stations and includes a high-speed downlink shared channel HS-DSCH (High Speed Downlink Shared Channel) of the transport channel for each mobile station. The HS-PDSH is used for transmitting packet data addressed to the mobile stations from a higher-level layer.")

And each of the remaining references provided in Exhibits H1-H9 seek ways of improving paging channel configuration:

- Vayanos, 1:49-52 ("There is therefore a need in the art for techniques to transmit signaling information for broadcast and multicast services in a manner to facilitate efficient reception of this information.")

- Chun, [0019] ("But, this process for acquiring the MCCH reconfiguration causes some problem. That is, in such case that the UE receives the BCCH reconfiguration information through the PCH, the reconfiguration of the MCCH may be delayed, because a discontinuous reception cycle (DTX cycle), i.e., a transmission period of the PCH, is longer than the MCCH modification period.")

- Cave, [0016] ("Therefore, HSDPA paging of a WTRU in CELL_PCH and URA_PCH states without the above mentioned disadvantages is desired.")

- Ahn, 2:38-42 ("Since PDCCH is generally mapped to RE (Resource Element) except RE(s) for carrying PHICH and other control signals, it should be checked how the PHICH and other control signals are mapped to a resource region to receive the PDCCH.")

- Lee, 3:20-27 ("One function implemented in 3GPP systems is a paging procedure. The paging procedure is necessary for converting the UE from idle mode into active mode. This procedure is implemented via a paging control channel (PCCH), a paging channel (PCH), a secondary common control physical channel (S-CCPCH), and a paging indicator channel (PICH). The paging procedure utilizes two different types of data (or signals), namely, a paging indicator (PI) and substantive paging data.")

- 25.211 v6.8.0, 8 ("The Paging Channel (PCH) is a downlink transport channel. The PCH is always transmitted over the entire cell. The transmission of the PCH is associated with the transmission of physical-layer generated Paging Indicators, to support efficient sleep-mode procedures.")

Combining the prior art identified in Exhibits H1-H9 with any one of the above exemplary Physical Shared Channel References would have amounted to applying a known technique to a known device ready for improvement to yield predictable results. Furthermore, the prior art and exemplary Physical Shared Channel References are in the same field of endeavor (*e.g.*, methods and systems for signaling channels over a physical channel) and given the design needs (*e.g.*, improving timeslot selection techniques), combined with a finite number of identified, predictable solutions (*e.g.*, expanding beyond existing timeslot selection methods), a POSITA would have been motivated to combine the teachings of these references.

Alternatively, each of the references provided in Exhibits H1-H9 alone renders this element obvious, in view of the knowledge and skill of a POSITA. That is, it would have been obvious in the view of one of ordinary skill in the art to add the above limitations to any one or more of the references provided in Exhibits H1-H9. A POSITA would have been motivated to incorporate techniques for indicating whether a particular time slot should be used as a signaling channel or a shared channel, and such a combination would have been within that person's skill. As demonstrated in the exemplary Physical Shared Channel References listed above, methods for timeslot selection were well-known in the art by the time of the '416 Patent's claimed invention and thus, adding it to any one or more of the references provided in Exhibits H1-H9 would have amounted to applying a known technique to a known device ready for improvement to yield predictable results.

2. The Signal Monitoring References

The Signal Monitoring References are: Kim 814, Vavanos, Cave, Kim 297, Yamada, and Lee. The relevant claims and/or claim elements of the Signal Monitoring References are identified below:

Patent	Claim	Claim Language
’416	1[d]	“and configured to monitor the signaled channels in indicated time intervals, to determine whether signaling information for the UE is present based on an identification of the UE, and”

To the extent Intellectual Ventures contends that an anticipatory reference in Exhibits H1-H9 fails to disclose these claims and/or claim elements, such reference can be combined with the corresponding disclosures from any one or more of the Signal Monitoring References to render it obvious under 35 U.S.C. § 103(a), at least based on Intellectual Ventures’ Infringement Contentions, apparent claim constructions, and application of the claims to the Accused Instrumentalities, as best as they can be deciphered.

One of ordinary skill in the art would have been motivated to combine any one or more of the references provided in Exhibits H1-H9 with any one or more of the above exemplary Signal Monitoring References to improve the function and utility of the same, and such a combination would have been within that person’s skill. For example, each of the Signal Monitoring References describe techniques for monitoring signaled channels for UE information:

- Kim 814, 1:38-55 (“A general paging procedure is as follows. Terminals are included in a specific paging group defined for an efficient paging procedure in a system. Therefore, the base station notifies that a paging message arrives at terminals included in a corresponding group through the paging indication channel (PICH), which is a physical layer channel. The terminals monitor the paging indication channel every monitoring cycle. As a result of monitoring, when it is sensed that indication information corresponding to the group including the terminal exists in the paging indication channel, the terminals search PCH information transmitted to the SCCPCH channel and decode paging information that an identifier (ID) such as international mobile subscriber identity (IMSI), temporary mobile subscriber identity (TMSI), UMTS terrestrial radio access network-radio network temporary identifier (U-RNTI)

exists. The terminals decoding the paging information performs following procedures corresponding to the paging information.")

- Vayanos, 12:32-48 ("Controllers 1020 and 1060 direct the operation at base station 110 x and wireless device 120 x, respectively. Controllers 1020 and 1060 may also perform various functions for transmission and reception, respectively, of notification indicators and signaling information for the services. For example, controller 1020 may perform process 700 in FIG. 7 for transmission of signaling information. Controller 1060 may perform process 800 in FIG. 8 for reception of signaling information and process 900 in FIG. 9 for the counting procedure. Memory units 1022 and 1062 store data and program codes for controllers 1020 and 1060, respectively. A timer 1024 provides time information for controller 1020, which uses the time information to maintain the MCCH schedule. A timer 1064 provides time information for controller 1060, which uses the time information to determine when to wake up to process the PICH and MICH as well as to maintain the MCCH schedule.")

- Cave, [0038] ("The WTRU-L1 425 monitors the PICH when awake looking for a paging indicator. When a paging indicator is found, the WTRU-L1 425 monitors the HS-SCCH during the time interval, τPICH or Δ, depending on which of the above embodiments are utilized, looking for a H-RNTI. If the paging indicator is not found, the WTRU-L1 425 re-enters sleep mode and waits for the next paging indicator opportunity. If the WTRU-L1 425 successfully receives a paging indicator and the common or WTRU-specific paging H-RNTI, the WTRU-L1 425 retrieves the message from the HS-PDSCH and forwards the message to the higher layer WTRU RRC 430, (step 465).")

- Kim 297, 17:25-35 ("Referring to FIG. 8A, UE1 and UE2 assume scheduling information transmitting formats designated to themselves, respectively and then try scheduling signal receptions on possible time-frequency domains, respectively. In particular, the UE1 assumes a unit frequency domain indicated by one space in FIG. 8A and then tries a scheduling signal reception. And, the UE2 assumes a unit frequency domain indicated by two spaces in FIG. 8B and then tries a scheduling signal reception. In this case, the UE1 in the example shown in FIG. 8A can finish a scheduling signal search by reading a scheduling signal transmitted to itself in a fourth search.")

- Yamada, 6:37-44 ("Since the mobile station 20 always monitors a channel for call-out in the case of the idle mode (standby state), the mobile station 20 can recognize the paging to the own station. The mobile station 20 returns a response to the network if the location registration area and the TMSI (IMSI) included in the paging request are identical to the location registration area and the TMSI (IMSI) stored in itself.")

And each of the remaining references provided in Exhibits H1-H9 seek ways of improving signal channel monitoring:

- Chun, [0047] ("Also, the parameters may comprise a start time of the MCCH reconfiguration. Herein, the start time may be detected by at least one of a SFN, a CFN,

a modification period index, a repetition period index, and an access period index. The UE monitors periodically the MSI message, receives the MCCH configuration modification information during a modification period. Unless the MCCH configuration information include the start time, the UE may determine the start time using at least one of the SFN, the CFN, the start time of the next modification period, a repetition period or an access period. But, if the MCCH configuration information includes the start time of the MCCH reconfiguration, the UE may recognize the time of the MCCH reconfiguration. Meanwhile, the start time of the MCCH reconfiguration may be transmitted through the MCCH instead of the BCCH, or be transmitted by the MCCH configuration modification information.")

- Ahn, 3:40-49 ("Preferably, the first information includes either number information of the PHICH per subframe or number information of PHICH group per subframe. Preferably, the PBCH includes signaling information for indicating the second information. More preferably, the PBCH includes signaling information for indicating the duration (m) information of the PHICH per subframe. In this case, the signaling information can have a 1-bit length. More preferably, the specific constant includes one selected from the group consisting of ⅙, ½, 1 and 2.")

- Lee, 5:1-8 ("In idle mode, the UE needs to complete a periodical supervision procedure in order to monitor the paging channel. Upon receiving paging information related to the UE itself, the UE then changes into active mode and receives paging from the network. The monitoring in the periodical supervision procedure is realized through the monitoring of a paging indicator (PI). The paging indicator is sent once via paging indicator channel (PICH) in every cycle.")

- 25.211 v.6.8.0, 37 ("In each PICH frame, Np paging indicators {P0, …, PNp-1} are transmitted, where Np=18, 36, 72, or 144. The PI calculated by higher layers for use for a certain UE, is associated to the paging indicator Pq, where q is computed as a function of the PI computed by higher layers, the SFN of the P-CCPCH radio frame during which the start of the PICH radio frame occurs, and the number of paging indicators per frame (Np): [Formula Omitted] Further, the PI calculated by higher layers is associated with the value of the paging indicator Pq. If a paging indicator in a certain frame is set to "1" it is an indication that UEs associated with this paging indicator and PI should read the corresponding frame of the associated S-CCPCH.")

Combining the prior art identified in Exhibits H1-H9 with any one of the above exemplary Signal Monitoring References would have amounted to applying a known technique to a known device ready for improvement to yield predictable results. Furthermore, the prior art and exemplary Signal Monitoring References are in the same field of endeavor (e.g., methods and systems for transmitting transport channels over a physical channel) and given the design needs (e.g., improving timeslot selection techniques), combined with a finite number of identified, predictable

solutions (e.g., expanding beyond existing timeslot selection methods), a POSITA would have been motivated to combine the teachings of these references.

Alternatively, each of the references provided in Exhibits H1-H9 alone renders this element obvious, in view of the knowledge and skill of a POSITA. That is, it would have been obvious in the view of one of ordinary skill in the art to add the above limitations to any one or more of the references provided in Exhibits H1-H9. A POSITA would have been motivated to incorporate techniques for monitoring signaled channels at indicated time intervals for timeslot selection, and such a combination would have been within that person's skill. As demonstrated in the exemplary Signal Monitoring References listed above, methods for signaled channel monitoring were well-known in the art by the time of the Asserted Patent's claimed invention and thus, adding it to any one or more of the references provided in Exhibits H1-H9 would have amounted to applying a known technique to a known device ready for improvement to yield predictable results.

3. The Shared Frame References

The Shared Frame References are: Kim 814 and Kim 297. The relevant claims and/or claim elements of the Shared Frame References are identified below:

Patent	Claim	Claim Language
'416	2	"2. The UE of claim 1, wherein the respective time interval or each indicated time interval is part of a shared frame that is allocated by a network device."

To the extent Intellectual Ventures contends that an anticipatory reference in Exhibits H1-H9 fails to disclose these claims and/or claim elements, such reference can be combined with the corresponding disclosures from any one or more of the Shared Frame References to render it obvious under 35 U.S.C. § 103(a), at least based on Intellectual Ventures' Infringement Contentions, apparent claim constructions, and application of the claims to the Accused Instrumentalities, as best as they can be deciphered.

One of ordinary skill in the art would have been motivated to combine any one or more of the references provided in Exhibits H1-H9 with any one or more of the above exemplary Shared Frame References to improve the function and utility of the same, and such a combination would have been within that person's skill. For example, each of the Shared Frame References describe techniques for allocating time intervals across shared frames:

- Kim 814, 6:34-56 ("According to a procedure in accordance with the embodiment described above, a radio resource as shown in FIG. 6 is formed and transmitted to the terminal. The terminal receiving the radio resource searches a control channel11 of the physical layer, recognizes the group ID reserved and allocated for transmission of paging information, which is given for the scheduler of the base station to identify the terminal or the terminal group in a cell, paging information transmitted to the radio resource block12 based on radio resource block addressing information. That is, the terminals may recognize whether the paging message on the terminal group exists by searching a control channel and checking existence of the group ID reserved and allocated for transmission of the paging information in the scheduling information of the control channel transmitted from the base station. Therefore, when there is no group ID for the paging message indicating own group in the control channel, the terminals determine that the paging message does not exist, and continuously performs a discontinuous reception operation. When the group ID exists, the terminals stop the discontinuous reception operation and receive the paging message that the base station transmits on the radio resource addressed by the group ID.")

- Kim 297, 15:16-31 ("CCEs are allocated to a UE, which should confirm whether there exists PDCCH transmitted to itself, in advance. For instance, assuming that PDCCH carrying prescribed information is transmittable at a coding rate ¾, ⅜, 3/16. or 3/32 via a single CCE, two CCEs, four CCEs or eight CCEs, if a prescribed terminal is allocated to confirm first to sixteenth CCEs, the terminal should perform decoding on each CCE in a manner of assuming a case that the PDCCH is transmitted at a coding rate ¾. ⅜, 3/16 or 3/32 for the sixteen CCEs for each subframe. Hence, the terminal performs maximum 30 (=16+8+4+2) decodings to check whether there exits PDCCH transmitted to itself. This corresponds to the assumption that mapping of PDCCH to CCE is carried out by a tree structure via a neighbor CCE only. If the PDCCH mapping becomes more free, a count of decodings the UE has to perform may be incremented.")

And each of the remaining references provided in Exhibits H1-H9 seek ways of improving time interval allocation:

- Vayanos, 3:58-4:2 ("The MICH has a format that is similar to the PICH format shown in FIG. 2B. Each MICH frame includes 300 bits, which are labeled as bits b0 through b299. The first 288 bits are used for Nn notification indicators, and the last 12 bits are reserved. The number of notification indicators (Nn) in each MICH frame is

configurable by the system and can take on a value of 18, 36, 72 or 144. Each notification indicator is sent in 288/Nn consecutive bits in the MICH frame, where 288/Nn can take on a value of 16, 8, 4 or 2. The Nn notification indicators are sent in Nn indicator locations that are numbered from 0 through Nn−1. Notification indicators may also be sent using the last 12 bits in each PICH frame.")

- Chun, [0042] ("Also, the parameters may comprise a start time of the MCCH reconfiguration. Herein, the start time may be represented as at least one of a SFN, a CFN, a modification period index, a repetition period index, and an access period index. Unless the MCCH configuration information includes the start time, the UE may determine the start time using the MCCH configuration modification information or a reference time. Wherein, the reference time corresponds to at least one of the SFN, the CFN, the start time of the next modification period, a repetition period or an access period. But, if the MCCH configuration information includes the start time of the MCCH reconfiguration, the UE may recognize the MCCH reconfiguration time. Meanwhile, the start time of the MCCH reconfiguration may be transmitted through the MCCH instead of the BCCH, or be transmitted by the MCCH configuration modification information.")

- Cave, [0021] ("Then, the WTRU monitors the PICH when it is awake and looks for the Paging Indicator. If the Paging Indicator is found, the WTRU begins to monitor the HSSCCH for the common paging H-RNTI. As the Node-B schedules the PCH with other DL traffic, the strict timing relationship between the PICH and associated SCCPCH carrying the PCH, existing in Release 6, is no longer possible. Instead, the WTRU must stay awake thereby overriding its DRX cycle and monitor the HS-SCCH until one of the following occurs: the WTRU receives a paging message on the HSSCCH (a message addressed to the common paging H-RNTI); the WTRU receives another paging indicator in a subsequent PICH; or a configured timer, that can be broadcast as part of the system information or can be hardcoded, expires. Further, to reduce the time the WTRU must be awake, the PCH channel can be given a higher priority at the Node-B so that it can be scheduled sooner. If the paging indicator is not found, the WTRU goes back to sleep mode and waits for the next paging indicator opportunity. If the WTRU is paged and finds the common paging H-RNTI, the WITRU retrieves the PCH channel from the HS-PDSCH and proceeds as set forth in Release 6.")

- Ahn, 6:1-11 ("In FIG. 2A and FIG. 2B, shown are the case that a PHICH duration m is 1 or 3 in case that an OFDM symbol interval n for control information transmission within a subframe is 3 and that the number GN of PHICH groups is 2. FIG. 2C and FIG. 2D show the case of m=1 and GN=2 in case that n is 2 or 1. Referring to FIGS. 2A to 2D, if the first information such as N or GN and the second information corresponding to m are specified, a resource region for transmitting PHICH can be obtained according to a predetermined pattern. Hence, it is able to obtain a position for transmitting PDCCH within an OFDM symbol region within a range of n.")

- Yamada, 19:4-18 ("FIG. 4 is a view of an exemplary structure of a downlink radio frame assumed based on the proposition of 3GPP for the EUTRA. The downlink radio

frame is two-dimension ally made up of Chunks, which are clusters of a plurality of sub-carriers on the frequency axis and the transmission timing interval TTI on the time axis. The Chunk is made up of a cluster of several sub-carriers. For example, on the frequency axis, if the entire spectrum (downlink frequency bandwidth) B5 of the downlink is 20 MHz; the frequency bandwidth Bch of the chunk is 1.25 MHz; and the sub-carrier frequency bandwidth BSc is 12.5 kHz, the frame includes 16 Chunks and 100 sub-carriers for each Chunk, i.e., a total of 1600 sub-carriers for the downlink. On the time axis, if one radio frame is 10 ms and TTI is 0.5 ms, 20 TTIs are included.")

- Lee, 1:40-48 ("FIGS. 1 and 2 show a typical frame that is used in OFDM. One frame has a time duration of 10 ms (milliseconds) and consists of 20 sub-frames, each having a time duration of 0.5 ms. Each sub-frame may consist of a resource block (RB) that contains data or information, and a cyclic prefix (CP) that is a guard interval needed for conventional OFDM modulation (but not needed for OFDM with pulse shaping, i.e., OFDM/OQAM). The sub-frame duration corresponds to the minimum downlink TTI (Transmission Time Interval).")

- 25.211 v6.8.0, 15 ("The random-access transmission is based on a Slotted ALOHA approach with fast acquisition indication. The UE can start the random-access transmission at the beginning of a number of well-defined time intervals, denoted access slots. There are 15 access slots per two frames and they are spaced 5120 chips apart, see figure 3. The timing of the access slots and the acquisition indication is described in subclause 7.3. Information on what access slots are available for random-access transmission is given by higher layers.")

Combining the prior art identified in Exhibits H1-H9 with any one of the above exemplary Shared Frame References would have amounted to applying a known technique to a known device ready for improvement to yield predictable results. Furthermore, the prior art and exemplary Shared Frame References are in the same field of endeavor (e.g., methods and systems for transmitting transport channels over a physical channel) and given the design needs (e.g., improving timeslot selection techniques), combined with a finite number of identified, predictable solutions (e.g., expanding beyond existing timeslot selection methods), a POSITA would have been motivated to combine the teachings of these references.

Alternatively, each of the references provided in Exhibits H1-H9 alone renders this element obvious, in view of the knowledge and skill of a POSITA. That is, it would have been obvious in the view of one of ordinary skill in the art to add the above limitations to any one or more of the

references provided in Exhibits H1-H9. A POSITA would have been motivated to incorporate techniques for timeslot selection within a shared frame, and such a combination would have been within that person's skill. As demonstrated in the exemplary Shared Frame References listed above, methods for timeslot allocation and selection within a shared frame were well-known in the art by the time of the Asserted Patent's claimed invention and thus, adding it to any one or more of the references provided in Exhibits H1-H9 would have amounted to applying a known technique to a known device ready for improvement to yield predictable results.

4. The Two or More Timeslots References

The Two or More Timeslots References are: Kim 814 and Kim 297. The relevant claims and/or claim elements of the Two or More Timeslots References are identified below:

Patent	Claim	Claim Language
'416	4	"4. The UE of claim 1, wherein the respective time interval or each indicated time interval is two or more timeslots."

To the extent Intellectual Ventures contends that an anticipatory reference in Exhibits H1-H9 fails to disclose these claims and/or claim elements, such reference can be combined with the corresponding disclosures from any one or more of the Two or More Timeslots References to render it obvious under 35 U.S.C. § 103(a), at least based on Intellectual Ventures' Infringement Contentions, apparent claim constructions, and application of the claims to the Accused Instrumentalities, as best as they can be deciphered.

One of ordinary skill in the art would have been motivated to combine any one or more of the references provided in Exhibits H1-H9 with any one or more of the above exemplary Two or More Timeslots References to improve the function and utility of the same, and such a combination would have been within that person's skill. For example, each of the Two or More Timeslot References describe techniques for signaling over two or more time intervals:

- Kim 814, 4:64-5:8 ("The base station performs mapping on the paging channel with a radio resource block location 9 of a physical layer allocated at TTI 8 as a fixed size and location, e.g., a time index and a sub-carrier index, based on a Tpaging indication channel-PCH value 7 at step S150, modulates and codes a radio resource based on the preset up modulating and coding methods, and transmits the radio resource to the terminal at step S160. The Tpaging indication channel-PCH value is a parameter notifying a time difference between the paging indication channel and the TTI that the paging channel is transmitted. The Tpaging indication channel-PCH value is set up as a multiple TTI.")

- Kim 297, 15:16-31 ("CCEs are allocated to a UE, which should confirm whether there exists PDCCH transmitted to itself, in advance. For instance, assuming that PDCCH carrying prescribed information is transmittable at a coding rate ¾, ⅜, 3/16. or 3/32 via a single CCE, two CCEs, four CCEs or eight CCEs, if a prescribed terminal is allocated to confirm first to sixteenth CCEs, the terminal should perform decoding on each CCE in a manner of assuming a case that the PDCCH is transmitted at a coding rate ¾. ⅜, 3/16 or 3/32 for the sixteen CCEs for each subframe. Hence, the terminal performs maximum 30 (=16+8+4+2) decodings to check whether there exits PDCCH transmitted to itself. This corresponds to the assumption that mapping of PDCCH to CCE is carried out by a tree structure via a neighbor CCE only. If the PDCCH mapping becomes more free, a count of decodings the UE has to perform may be incremented.")

And each of the remaining references provided in Exhibits H1-H9 seek ways of improving channel signaling over time:

- Vayanos, 3:3-10 ("FIG. 2A shows the format of the PICH in UMTS. The PICH is partitioned into frames, with each frame having a duration of 10 millisecond (ms). Each frame is identified by a 12-bit system frame number (SFN) that is simultaneously transmitted on a Primary CCPCH (P-CCPCH). The SFN is reset to 0 at a specific time, is incremented by one for each frame thereafter, and wraps around to zero after reaching the maximum value of 4095.")

- Chun, [0042] ("Also, the parameters may comprise a start time of the MCCH reconfiguration. Herein, the start time may be represented as at least one of a SFN, a CFN, a modification period index, a repetition period index, and an access period index. Unless the MCCH configuration information includes the start time, the UE may determine the start time using the MCCH configuration modification information or a reference time. Wherein, the reference time corresponds to at least one of the SFN, the CFN, the start time of the next modification period, a repetition period or an access period. But, if the MCCH configuration information includes the start time of the MCCH reconfiguration, the UE may recognize the MCCH reconfiguration time. Meanwhile, the start time of the MCCH reconfiguration may be transmitted through the MCCH instead of the BCCH, or be transmitted by the MCCH configuration modification information.")

- Cave, [0024] ("As another example, the PCH message can be stored in a WTRU specific transmit queue. If the PCH message is scheduled by the Node-B algorithm, it is not transmitted in the current TTI, but in a future TTI (TTI + delta). The NodeB calculates 'delta' based on the WTRU DRX cycle. The Node-B can then perform another scheduling pass to determine the mac-hs PDU to be sent in the current TTI. The UTRAN sends the paging indicator on the PICH, just prior to the scheduled future time (TTI + delta). The time between PICH and associated TTI is fixed and can be hardcoded or broadcast as part of the system information.")

- Ahn, 6:1-11 ("In FIG. 2A and FIG. 2B, shown are the case that a PHICH duration m is 1 or 3 in case that an OFDM symbol interval n for control information transmission within a subframe is 3 and that the number GN of PHICH groups is 2. FIG. 2C and FIG. 2D show the case of m=1 and GN=2 in case that n is 2 or 1. Referring to FIGS. 2A to 2D, if the first information such as N or GN and the second information corresponding to m are specified, a resource region for transmitting PHICH can be obtained according to a predetermined pattern. Hence, it is able to obtain a position for transmitting PDCCH within an OFDM symbol region within a range of n.")

- Yamada, 3:34-46 ("With regard to the downlink/uplink dedicated physical data channels DPDCH and the downlink/uplink dedicated physical control channels DPCCH, the downlink dedicated physical data channel DPDCH and the downlink dedicated physical control channel DPCCH are time-multiplexed in a time slot in the case of the downlink, and the uplink dedicated physical data channel DPDCH and the uplink dedicated physical control channel DPCCH are mapped to I-phase and Q-phase, respectively, in the case of the uplink. One or more downlink/uplink dedicated physical data channels DPDCH are allocated to a mobile station (spread code multiplexing) and used for the data transmission from a higher-level layer.")

- Lee, 5:1-8 ("In idle mode, the UE needs to complete a periodical supervision procedure in order to monitor the paging channel. Upon receiving paging information related to the UE itself, the UE then changes into active mode and receives paging from the network. The monitoring in the periodical supervision procedure is realized through the monitoring of a paging indicator (PI). The paging indicator is sent once via paging indicator channel (PICH) in every cycle.")

- 25.211 v6.8.0, 37 ("The HS-SCCH is a fixed rate (60 kbps, SF=128) downlink physical channel used to carry downlink signalling related to HS-DSCH transmission. Figure 26A illustrates the sub-frame structure of the HS-SCCH.")

Combining the prior art identified in Exhibits H1-H9 with any one of the above exemplary Two or More Timeslots References would have amounted to applying a known technique to a known device ready for improvement to yield predictable results. Furthermore, the prior art and exemplary Two or More Timeslots References are in the same field of endeavor (e.g., methods

and systems for transmitting transport channels over a physical channel) and given the design needs (e.g., improving timeslot selection techniques), combined with a finite number of identified, predictable solutions (e.g., expanding beyond existing timeslot selection methods), a POSITA would have been motivated to combine the teachings of these references.

Alternatively, each of the references provided in Exhibits H1-H9 alone renders this element obvious, in view of the knowledge and skill of a POSITA. That is, it would have been obvious in the view of one of ordinary skill in the art to add the above limitations to any one or more of the references provided in Exhibits H1-H9. A POSITA would have been motivated to incorporate techniques for timeslot selection involving two or more timeslots, and such a combination would have been within that person's skill. As demonstrated in the exemplary Two or More Timeslots References listed above, methods for selecting two or more timeslots in a given time interval were well-known in the art by the time of the Asserted Patent's claimed invention and thus, adding it to any one or more of the references provided in Exhibits H1-H9 would have amounted to applying a known technique to a known device ready for improvement to yield predictable results.

5. The Power Down References

The Power Down References are: Kim 814, Vavanos, Cave, Kim 297, Yamada, and Lee. The relevant claims and/or claim elements of the Power Down References are identified below:

Patent	Claim	Claim Language
'416	5	"5. The UE claim 1, wherein the UE powers down radio circuitry outside of the indicated time intervals."

To the extent Intellectual Ventures contends that an anticipatory reference in Exhibits H1-H9 fails to disclose these claims and/or claim elements, such reference can be combined with the corresponding disclosures from any one or more of the Power Down References to render it obvious under 35 U.S.C. § 103(a), at least based on Intellectual Ventures' Infringement

Contentions, apparent claim constructions, and application of the claims to the Accused Instrumentalities, as best as they can be deciphered.

One of ordinary skill in the art would have been motivated to combine any one or more of the references provided in Exhibits H1-H9 with any one or more of the above exemplary Power Down References to improve the function and utility of the same, and such a combination would have been within that person's skill. For example, each of the Power Down References describe techniques for powering down radio circuitry:

- Kim 814, 4:19-28 ("When it is considered that paging notifying generation of information to be transmitted on the downlink should be performed on the terminals performing the low power consumption according to the DRX/DTX cycle, paging of the LTE system is applied to the terminals in the RRC_Idle state and the MAC_Dormant mode. In the present invention, paging is performed on the terminals in the RRC_Idle state, and a method using a paging indication channel, which is a physical layer channel, and a method to be applied without the paging indication channel, are provided.")

- Vayanos, 6:35-45 ("Second, the notification indicators may be sent on the MICH in a manner to allow the wireless devices to detect the notification indicators during their paging occasions, which can reduce battery consumption. The notification indicators should also be sent such that wireless devices in various MBMS-related states can receive these indicators. These include wireless devices expecting a service to come on, wireless devices actively monitoring a service but interested in other services, and wireless devices that just turned on, or just moved from other cells, or are becoming interested in MBMS.")

- Cave, [0009] (The paging procedure is a two step process. To save battery power, a WTRU is configured with a discontinuous reception (DRX) cycle that shuts off the WTRU's receiver chain periodically. This is known as sleep mode. A WTRU is only awake (the receiver chain is on) for certain frames known as paging occasions. Within each paging occasion, a WTRU listens for a Paging Indicator on a Paging Indicator Channel (PICH). The Paging Indicator instructs a WTRU to monitor the paging channel (PCH) carried in the Secondary Common Control Physical Channel (S-CCPCH). The PCH is a transport channel that is mapped to a logical Paging Control Channel (PCCH).")

- Kim 297, 16:37-52 ("In particular, as mentioned in the foregoing description of the above example, even if a single UE is assigned to check first to sixteenth CCEs, if 2-step coding rates including a maximum coding rate ⅜ and a coding rate above ⅜ at which the corresponding UE will try a PDCCH reception (or 2-step CCE groups) are additionally announced to be checked by the corresponding UE, the UE need not

perform decoding on the assumption of a single CCE (case of a coding rate ¾) and decoding on the assumption of eight CCEs (case of a coding rate 3/32) but just performs maximum 12 (=8+4) decodings only. Using the above-explained methods, the trial decoding count for the PDCCH reception by the UE can be decremented. Hence, it is able to settle such a problem as a battery consumption of UE and the like.")

- Yamada, 6:63-66 ("The paging indicator channel PICH is a channel set with the aim of reducing a discontinuous reception IR (Intermittent Reception) rate for improving battery saving in the mobile stations.")

- Lee, 5:14-21 ("When in the RRC-connected state, the UE can be divided into a URA_PCH state, a CELL_PCH state, a CELL_FACH state, and/or a CELL_DCH state. In particular, when the UE is in idle state (in addition to the URA_PCH state and the CELL_PCH state), it wakes up only at each discontinuous reception (DRX) cycle to receive a PICH (Paging Indicator Channel) transmitting paging information, in order to reduce power consumption.")

And each of the remaining references provided in Exhibits H1-H9 seek ways of improving techniques for reducing power consumption:

- Chun, Abstract ("Also, the mobile terminal of the present invention comprises a processor unit by which the common channel is reconfigured. According the present invention, the common channel, such as the MCCH, may be reconfigured more efficiently.")

- Ahn, 2:56-62 ("An object of the present invention is to provide a method of acquiring resource region information for PHICH in a mobile communication system and a method of receiving a physical downlink control channel (PDCCH) using the same, by which location information of a resource region for transmit ting PHICH is efficiently transferred and by which an initial access user equipment is facilitated to receive PDCCH.")

- 25.211 v.6.8.0, 22 ("The Paging Channel (PCH) is a downlink transport channel. The PCH is always transmitted over the entire cell. The transmission of the PCH is associated with the transmission of physical-layer generated Paging Indicators, to support efficient sleep-mode procedures.")

Combining the prior art identified in Exhibits H1-H9 with any one of the above exemplary Power Down References would have amounted to applying a known technique to a known device ready for improvement to yield predictable results. Furthermore, the prior art and exemplary Power Down References are in the same field of endeavor (e.g., methods and systems for transmitting transport channels over a physical channel) and given the design needs (e.g., improving timeslot

selection techniques), combined with a finite number of identified, predictable solutions (e.g., expanding beyond existing timeslot selection methods), a POSITA would have been motivated to combine the teachings of these references.

Alternatively, each of the references provided in Exhibits H1-H9 alone renders this element obvious, in view of the knowledge and skill of a POSITA. That is, it would have been obvious in the view of one of ordinary skill in the art to add the above limitations to any one or more of the references provided in Exhibits H1-H9. A POSITA would have been motivated to incorporate techniques for conserving power through timeslot selection, and such a combination would have been within that person's skill. As demonstrated in the exemplary Power Down References listed above, methods for reducing power consumption were well-known in the art by the time of the Asserted Patent's claimed invention and thus, adding it to any one or more of the references provided in Exhibits H1-H9 would have amounted to applying a known technique to a known device ready for improvement to yield predictable results.

I. The '138 Patent

NAME	DESCRIPTION:						
	The Receive Parameters Associated with Radio Bearers References	The Determine and Transmit Buffer Occupancies Associated with Radio Bearers References	The Receive Single Allocation of Uplink Resources References	The First Iteration Selection from a Subset of Radio Bearers Based on Received Parameters References	The Second Iteration Selection Based on Buffered Data References	The Radio Bearers are Associated with PDP Context References	The Receive Allocation on a Physical Shared Channel from a Scheduler in Network References
Eckert	✓	✓	✓				
Bucknell				✓	✓		
Lohr	✓	✓	✓				
Yi				✓	✓		
Fox	✓		✓	✓	✓	✓	
Cao				✓	✓		
Gerkis				✓	✓		
Peisa				✓	✓		

NAME	DESCRIPTION:						
	The Receive Parameters Associated with Radio Bearers References	The Determine and Transmit Buffer Occupancies Associated with Radio Bearers References	The Receive Single Allocation of Uplink Resources References	The First Iteration Selection from a Subset of Radio Bearers Based on Received Parameters References	The Second Iteration Selection Based on Buffered Data References	The Radio Bearers are Associated with PDP Context References	The Receive Allocation on a Physical Shared Channel from a Scheduler in Network References
25.321 V6.8.0	✓	✓	✓				
R2-061415	✓	✓	✓				
Hans						✓	
Lohr 804			✓				✓

1. The Receive Parameters Associated with Radio Bearers References

The Receive Parameters Associated with Radio Bearers References are: Lohr, Eckert, Fox, 25.321 V6.8.0, and R2-061415. The relevant claims and/or claim elements of the Receive Parameters Associated with Radio Bearers References are identified below:

Patent	Claim	Claim Language
’138	1	“cause the circuitry to receive parameters associated with a plurality of radio bearers”

To the extent Intellectual Ventures contends that an anticipatory reference in Exhibits I1-I12 fails to disclose these claims and/or claim elements, such reference can be combined with the corresponding disclosures from any one or more of the Receive Parameters Associated with Radio Bearers References to render it obvious under 35 U.S.C. § 103(a), at least based on Intellectual Ventures’ Infringement Contentions, apparent claim constructions, and application of the claims to the Accused Instrumentalities, as best as they can be deciphered.

One of ordinary skill in the art would have been motivated to combine any one or more of the references provided in Exhibits I1-I12 with any one or more of the above exemplary Receive Parameters Associated with Radio Bearers References to improve the function and utility of the

same, and such a combination would have been within that person's skill. For example, each of the Receive Parameters Associated with Radio Bearers References describe techniques for receiving parameters associated with a radio bearers:

- Lohr, 13:20-26 ("In UMTS the procedure in Figure 11 is applied when a new physical channel needs to be created for the radio bearer. A Radio Bearer Establishment is initiated when an RB Establish Request primitive is received from the higher layer Service Access Point on the network side of the RRC layer. This primitive contains a bearer reference and QoS parameters. Based on these QoS parameters, Layer land Layer 2 parameters are chosen by the RRC entity on the network side.")

- Eckert, [0163] ("The RRC protocol layer 207 or the entities of the RRC protocol layer 207 is or are responsible for setting up and clearing down and reconfiguring physical channels, transport channels 209, logical channels 208, signalling radio bearers 213 and radio bearers 210 and also for negotiating all of the parameters of the protocol layer 1, i.e. of the physical layer 201 and of the protocol layer 2. To this end, the RRC units, i.e. the units of the RRC protocol layer 207, in the mobile radio network control unit 106, 107 and the respective mobile radio terminal 118 interchange appropriate RRC messages, via the signalling radio bearers 213. Details regarding the RRC layer are described in 3GPP TS 25.331, Technical Specification, Third Generation Partnership Project; Technical Specification Group Radio Access Network; RRC Protocol Specification (Release 1999)."

- Fox, 1:54-59 ("The mobile terminal has a list of QoS flows (logical channels or queues) configured by the network and their associated priority. The mobile terminal shall consider the scheduling grant received by the network to be shared among all the configured QoS flows.")

- 25.321 V6.8.0, page 57 ("At least every TTI, the MAC layer shall receive from each RLC entity the value of its Buffer Occupancy (BO), expressed in bytes. RRC can configure MAC to keep track of statistics (i.e. raw BO, average of BO and variance of BO) on the BO (see [7]) values of all Radio Bearers mapped onto a given transport channel. When the average or variance are requested, an averaging interval duration will also be provided. Every time the BO values are reported to MAC, the UE shall verify whether an event was triggered or if a periodic report is required (see [7]). If reporting is required (multiple reports may be triggered in a single TTI), the MAC shall deliver to RRC the reporting quantities required for the corresponding RBs. In the case of average and variance of BO, the averaging should be performed for the interval with the configured duration ending at the time when the event was triggered.")

- R2-06141, page 3 ("The network has the possibility to control what data is sent by the UE in response to a scheduling grant on a per radio bearer or grouping of radio bearer granularity. The exact mechanisms for this control as well as what level of enhanced control is needed is FFS. Different options need to be evaluated regarding how much control they provide vs. how much signalling overhead they incur.")

And each of the remaining references provided in Exhibits I1-I12 seek ways of transmission scheduling in wireless networks:

- Bucknell, [0004]-[0005] ("An object of the invention is to enable flexible and efficient multiplexing of data packets."; "According to a first aspect of the invention there is provided a method of multiplexing data packets having different assigned priorities, comprising: receiving data packets; operating a queue for each different priority of data packet; assembling a group of the data packets wherein a first portion of the group is populated with data packets selected from one or more of the queues according to a first rule and a second portion of the group is populated with data packets selected from one or more of the queues according to a second rule; and transmitting the group.")

- Yi, [0025] ("Thus, the inventors of the present invention recognized such drawbacks of the related art and provided a solution by providing a particular protocol layer of the transmitting side (transmitter) that initially receives service data units (SDUs) having the same priority through a single stream from an upper layer, processes these SDUs to generate protocol data units (PDUs) having different priorities, and uses respectively different transmission methods to transmit the generated PDUs over a radio interface in order to guarantee their respectively different quality of service (QoS) requirements.")

- Cao, page 2 ("In this paper, we are interested in cell-structured wireless networks. In such networks, the service area is divided into cells, and each cell has a base station. Within a cell mobile hosts communicate via the base station, and base stations are connected via wireline networks. The communication between a mobile host and a base station may consist of more than one traffic flow (or session). The base station is responsible for scheduling both downlink (from base station to mobile hosts) and uplink (from mobile hosts to base station) packet transmissions between the mobile hosts and itself. All the downlink packets are queued at the base station; therefore, the base station has full knowledge of the status of downlink queues. For uplink packet transmissions, mobile hosts need to send their transmission requests and queue status, if necessary, to the base station. The base station performs uplink scheduling based on these requests and related information. Although we assume the above model for the wireless network, the algorithms to be discussed are not necessarily only applicable in this model.")

- Gerkis, 1:28-35 ("The present disclosure relates to an apparatus, system and method for transmitting data flows that have different quality of service (QoS) attributes over a network link. More specifically, the present disclosure relates to an apparatus, system and method for providing and managing QoS for data flows transmitted over at least one link in a data network capable of transmitting data with different QoS requirements and/or attributes.")

- Peisa, 1:27-32 ("The present invention relates in general to the field of communications systems, and in particular, by way of example but not limitation, to scheduling packets

of data/informational flows having differing priority levels in a communications system.")

- 25.321 V6.8.0, 4.2.3.1 ("this functionality is used to transmit the information received from MAC-d on RACH based on logical channel priorities. This function is related to TF selection."); 6.1 ("priority handling between data flows of one UE")

- Fox, 1:5-7 ("This application relates to a method of and apparatus for transmitting data stored in the plurality of queues, each queue having a respective transmission priority.")

Combining the prior art identified in Exhibits I1-I12 with any one of the above exemplary Receive Parameters Associated with Radio Bearers References would have amounted to applying a known technique to a known device ready for improvement to yield predictable results. Furthermore, the prior art and exemplary Receive Parameters Associated with Radio Bearers References are in the same field of endeavor (*e.g.*, methods and systems for transmission scheduling in wireless networks) and given the design needs (*e.g.*, improving techniques for transmission scheduling in wireless networks), combined with a finite number of identified, predictable solutions (*e.g.*, expanding beyond existing techniques for transmission scheduling in wireless networks), a POSITA would have been motivated to combine the teachings of these references.

Alternatively, each of the references provided in Exhibits I1-I12 alone renders this element obvious, in view of the knowledge and skill of a POSITA. That is, it would have been obvious in the view of one of ordinary skill in the art to add the above limitations to any one or more of the references provided in Exhibits I1-I12. A POSITA would have been motivated to incorporate receiving parameters associated with a radio bearers into existing techniques for transmission scheduling in wireless networks, and such a combination would have been within that person's skill. As demonstrated in the exemplary Receive Parameters Associated with Radio Bearers References listed above, receiving parameters associated with a radio bearers was well-known in the art by the time of the Asserted Patent's claimed invention and thus, adding it to any one or

more of the references provided in Exhibits I1-I12 would have amounted to applying a known technique to a known device ready for improvement to yield predictable results.

2. The Determine and Transmit Buffer Occupancies Associated with Radio Bearers References

The Determine and Transmit Buffer Occupancies Associated with Radio Bearers References are: Eckert, Lohr, 25.321 V6.8.0, and R2-061415. The relevant claims and/or claim elements of the Determine and Transmit Buffer Occupancies Associated with Radio Bearers References are identified below:

Patent	Claim	Claim Language
’138	1	“determine a plurality of buffer occupancies, wherein each of the plurality of buffer occupancies is associated with one or more radio bearers of the plurality of radio bearers, cause the transmitter to transmit a message including the plurality of buffer occupancies to a network”

To the extent Intellectual Ventures contends that an anticipatory reference in Exhibits I1-I12 fails to disclose these claims and/or claim elements, such reference can be combined with the corresponding disclosures from any one or more of the Determine and Transmit Buffer Occupancies Associated with Radio Bearers References to render it obvious under 35 U.S.C. § 103(a), at least based on Intellectual Ventures’ Infringement Contentions, apparent claim constructions, and application of the claims to the Accused Instrumentalities, as best as they can be deciphered.

One of ordinary skill in the art would have been motivated to combine any one or more of the references provided in Exhibits I1-I12 with any one or more of the above exemplary Determine and Transmit Buffer Occupancies Associated with Radio Bearers References to improve the function and utility of the same, and such a combination would have been within that person’s skill. For example, each of the Determine and Transmit Buffer Occupancies Associated with Radio

Bearers References describe techniques for determining and transmitting buffer occupancies associated with radio bearers:

- Eckert, [0011] ("The measurement result list shown in Table 1 is thus transmitted from an RRC unit in the mobile radio terminal to the RRC unit in the corresponding mobile radio network control unit, and the respective RRC data buffer storage filling level is indicated for each radio bearer (RB).")

- Lohr, 7:1-9 ("In order to enable Node B controlled scheduling (e.g. Node B controlled time and rate scheduling), user equipment has to send some request message on the uplink for transmitting data to the Node B. The request message may contain status information of a user equipment e.g. buffer status, power status, channel quality estimate…. With a grant message sent in the downlink from the Node B to the UE, the Node B assigns the UE the TFCS with maximum data rate and the time interval, the UE is allowed to send. The grant message is in the following referred to as Scheduling Assignment (SA).")

- 25.321 V6.8.0, page 57 ("The parameter Buffer Occupancy (BO) indicates for each logical channel the amount of data in number of bytes that is available for transmission and retransmission in RLC layer. When MAC is connected to an AM RLC entity, control PDUs to be transmitted and RLC PDUs outside the RLC Tx window shall also be included in the BO. RLC PDUs that have been transmitted but not negatively acknowledged by the peer entity shall not be included in the BO.")

- R2-061415, page 3-4 ("Uplink buffer status reports are needed to provide support for QoS-aware packet scheduling. Uplink buffer status reports refer to the data that is buffered in the logical channel queues in the UE MAC. The uplink packet scheduler in the eNB is located at MAC level. Uplink buffer status reports may be transmitted using MAC signalling (e.g. as a specific type of MAC control PDU). A way to separately signal buffer status reports for different logical channel queues or groupings of logical channel queues is to be used. To define the exact content of buffer status reports and the possible use of physical layer signalling are FFS.")

And each of the remaining references provided in Exhibits I1-I12 seek ways of transmission scheduling in wireless networks:

- Bucknell, [0004]-[0005] ("An object of the invention is to enable flexible and efficient multiplexing of data packets."; "According to a first aspect of the invention there is provided a method of multiplexing data packets having different assigned priorities, comprising: receiving data packets; operating a queue for each different priority of data packet; assembling a group of the data packets wherein a first portion of the group is populated with data packets selected from one or more of the queues according to a first rule and a second portion of the group is populated with data packets selected from one or more of the queues according to a second rule; and transmitting the group.")

- Yi, [0025] ("Thus, the inventors of the present invention recognized such drawbacks of the related art and provided a solution by providing a particular protocol layer of the transmitting side (transmitter) that initially receives service data units (SDUs) having the same priority through a single stream from an upper layer, processes these SDUs to generate protocol data units (PDUs) having different priorities, and uses respectively different transmission methods to transmit the generated PDUs over a radio interface in order to guarantee their respectively different quality of service (QoS) requirements.")

- Cao, page 2 ("In this paper, we are interested in cell-structured wireless networks. In such networks, the service area is divided into cells, and each cell has a base station. Within a cell mobile hosts communicate via the base station, and base stations are connected via wireline networks. The communication between a mobile host and a base station may consist of more than one traffic flow (or session). The base station is responsible for scheduling both downlink (from base station to mobile hosts) and uplink (from mobile hosts to base station) packet transmissions between the mobile hosts and itself. All the downlink packets are queued at the base station; therefore, the base station has full knowledge of the status of downlink queues. For uplink packet transmissions, mobile hosts need to send their transmission requests and queue status, if necessary, to the base station. The base station performs uplink scheduling based on these requests and related information. Although we assume the above model for the wireless network, the algorithms to be discussed are not necessarily only applicable in this model.")

- Gerkis, 1:28-35 ("The present disclosure relates to an apparatus, system and method for transmitting data flows that have different quality of service (QoS) attributes over a network link. More specifically, the present disclosure relates to an apparatus, system and method for providing and managing QoS for data flows transmitted over at least one link in a data network capable of transmitting data with different QoS requirements and/or attributes.")

- Peisa, 1:27-32 ("The present invention relates in general to the field of communications systems, and in particular, by way of example but not limitation, to scheduling packets of data/informational flows having differing priority levels in a communications system.")

Fox, 2:34-43 ("According to system described herein, a method of transmitting from a first device to a second device data stored in a plurality of queues, each queue having a respective transmission priority, includes setting the data in each of said queues to be either primary data or secondary data, or a combination of primary data and secondary data; and transmitting the data from the queues in an order in dependence upon the priority of the queue and whether the data in that queue is primary data or secondary data." Combining the prior art identified in Exhibits I1-

I12 with any one of the above exemplary Determine and Transmit Buffer Occupancies Associated with Radio Bearers References would have amounted to applying a known technique to a known device ready for improvement to yield predictable results. Furthermore, the prior art and exemplary Determine and Transmit Buffer Occupancies Associated with Radio Bearers References are in the same field of endeavor (*e.g.*, methods and systems for transmission scheduling in wireless networks) and given the design needs (*e.g.*, improving techniques for transmission scheduling in wireless networks), combined with a finite number of identified, predictable solutions (*e.g.*, expanding beyond existing techniques for transmission scheduling in wireless networks), a POSITA would have been motivated to combine the teachings of these references.

Alternatively, each of the references provided in Exhibits I1-I12 alone renders this element obvious, in view of the knowledge and skill of a POSITA. That is, it would have been obvious in the view of one of ordinary skill in the art to add the above limitations to any one or more of the references provided in Exhibits I1-I12. A POSITA would have been motivated to incorporate determining and transmitting buffer occupancies associated with radio bearers into existing techniques for transmission scheduling in wireless networks, and such a combination would have been within that person's skill. As demonstrated in the exemplary Determine and Transmit Buffer Occupancies Associated with Radio Bearers References listed above, determining and transmitting buffer occupancies associated with radio bearers was well-known in the art by the time of the Asserted Patent's claimed invention and thus, adding it to any one or more of the references provided in Exhibits I1-I12 would have amounted to applying a known technique to a known device ready for improvement to yield predictable results.

3. The Receive Single Allocation of Uplink Resources References

The Receive Single Allocation of Uplink Resources References are: Lohr, Eckert, Fox, 25.321 V6.8.0, R2-061415, Lohr 804. The relevant claims and/or claim elements of the Receive Single Allocation of Uplink Resources References are identified below:

Patent	Claim	Claim Language
’138	1	“cause the circuitry to receive a single allocation of uplink resources”

To the extent Intellectual Ventures contends that an anticipatory reference in Exhibits I1-I12 fails to disclose these claims and/or claim elements, such reference can be combined with the corresponding disclosures from any one or more of the Receive Single Allocation of Uplink Resources References to render it obvious under 35 U.S.C. § 103(a), at least based on Intellectual Ventures’ Infringement Contentions, apparent claim constructions, and application of the claims to the Accused Instrumentalities, as best as they can be deciphered.

One of ordinary skill in the art would have been motivated to combine any one or more of the references provided in Exhibits I1-I12 with any one or more of the above exemplary Receive Single Allocation of Uplink Resources References to improve the function and utility of the same, and such a combination would have been within that person’s skill.

For example, each of the Receive Single Allocation of Uplink Resources References describe techniques for receiving single allocation of uplink resources:

- Lohr, 5:30-6:5 (“There are M different data flows (MAC-d) carrying data packets to be transmitted from user equipment to Node B. These data flows can have different QoS (Quality of Service), e.g. delay and error requirements … MAC-eu entity receives scheduling information from Node B (network side) via Layer 1 signaling.”); 7:1-9 (“With a grant message sent in the downlink from the Node B to the UE, the Node B assigns the UE the TFCS with maximum data rate and the time interval, the UE is allowed to send. The grant message is in the following referred to as Scheduling Assignment (SA).”)

- Eckert, [0189] (“When the communication link is set up (connection set-up), the subscriber and hence the subscriber mobile radio terminal 118 are allocated the

appropriate mobile radio resources required for the communication link, such as the necessary CDMA spreading codes, on the network, i.e. on the UTRAN, by the mobile radio network control unit 106, 107, and the protocols of the protocol layers 1 and 2 are configured such that the communication service can be secured with the negotiated quality of service for the duration of the communication link.")

- Fox, 6:57-67 ("When the mobile terminal 1 receives from the network core 12 the grant of permission to send data in the uplink, the terminal 1 transmits data from each of the queues in order of priority and sends packets within the guaranteed bit rate for that queue on receipt of the grant. If there is still capacity in the grant after transmission of the guaranteed data of the first priority queue 104, the mobile terminal then transmits the data from the second priority queue 100 up to the guaranteed bit rate. This process is repeated until either the grant capacity is exhausted or all the queues have been served to their guaranteed bit rates.")

- 25.321 V6.8.0, 11.8.2.3 ("There is one E-DCH Node B scheduler per Node B. The Node B scheduler is responsible for the following functions:

  - Allocating uplink resources to UEs for which it acts as the serving Node B")

- R2-061415, page 3 ("Signalling of Scheduler Decisions:

  - UEs identify whether resources are assigned to them by receiving a scheduling (resource assignment) channel. There may be separate scheduling channels for uplink and downlink resource assignment.

  - Scheduling decisions are signalled via MAC messages. It is FFS whether resources can be assigned by other means e.g. MAC headers or RRC signalling.

  - The network has the possibility to control what data is sent by the UE in response to a scheduling grant on a per radio bearer or grouping of radio bearer granularity. The exact mechanisms for this control as well as what level of enhanced control is needed is FFS. Different options need to be evaluated regarding how much control they provide vs. how much signalling overhead they incur.")

- Lohr 804, [0046] ("In the downlink, a resource indication (scheduling grant) is required to indicate to the UE the (maximum) amount of uplink resources it may use. When issuing scheduling grants, the Node B may use QoS-related information provided by the S-RNC and from the UE in the scheduling requests to determine the appropriate allocation of resources for servicing the UE at the requested QoS parameters."); [0052] ("The absolute grants provide an absolute limitation of the maximum amount of uplink resources the UE is allowed to use for uplink transmissions. Absolute grants are especially suitable to rapidly change the allocated UL resources.").

And each of the remaining references provided in Exhibits I1-I12 seek ways of allocating wireless resources:

- Bucknell, [0025] ("Some examples are given below of how the data packets may be selected from the queues in the queue stores 50 to populate the group of data packets assembled in the first portion 90 and second portion 95 of the output buffer 80. In general we can assume that the resources available for the first portion 90 and the second portion 95 are both known before the multiplexing operation is carried out, for example in terms of the number of PDU's which can be transmitted. In the case that the resources are not known exactly in advance, for example if the total available resource depends in any way on the outcome of the multiplexing, it may be necessary to consider the outcome of the multiplexing for a number of possible resource allocations and then select one of them.")

- Gerkis, 14:10-22 ("The present disclosure provides for the efficient utilization of a shared resource, such as a radio link, in a network including heterogeneous links. Data is organized in flows and each flow can be provided with its own logical channel with its own set of QoS attributes. These attributes can include prioritization, latency restrictions, data rate requirements, reliability requirements, etc. Data flows with wildly different quality of service attributes can be multiplexed onto a single link, which can have variable data transmission capacities, and the necessary differentiated quality of service for these flows can be efficiently provided. The range and/or types of attributes are not particularly limited and can include attributes such as: whether ARQ is to be provided; whether header compression is to be performed; priority; tolerance or intolerance to latency; etc.")

- Yi, [0005] ("The RNC 123 handles the assigning and managing of radio resources, and operates as an access point with respect to the core network 130. The Node-Bs 121 receive information sent by the physical layer of the terminal 100 through an uplink, and transmit data to the terminal through a downlink. The Node-Bs 121, thus, operate as access points of the UTRAN 120 for the terminal 100. Also, the RNC 123 allocates and manages radio resources and operates as an access point with the core network 130. Between various network structure elements, there exists an interface that allows data to be exchanged for communication therebetween.")Peisa, 4:20-47 ("Referring now to FIG. 2, a protocol model for an exemplary next-generation system with which the present invention may be advantageously employed is illustrated generally at 200. In the protocol model 200 (e.g., for a Forward Access CHannel (FACH) transport channel type), the "UU" indicates the interface between UTRAN 130 and the UE 110, and "Iub" indicates the interface between the RNC 140 and a Node B 150 (where "Node B" is a generalization of, for example, a Base Transceiver Station (BTS)). User and signaling data may be carried between an RNC 140 and a UE 110 using Radio Access Bearers (RABs) (as illustrated hereinbelow with reference to FIG. 3). Typically, a UE 110 is allocated one or more RABs, each of which is capable of carrying a flow of user or signaling data. RABs are mapped onto respective logical channels. At the Media Access Control (MAC) layer, a set of logical channels is mapped in turn onto a transport channel, of which there are two types: a "common" transport channel which is shared

by different UEs 110 and a "dedicated" transport channel which is allocated to a single UE 110 (thus leading to the terms "MAC-c" and "MAC-d"). One type of common channel is the FACH. A basic characteristic of a FACH is that it is possible to send one or more fixed size packets per transmission time interval (e.g., 10, 20, 40, or 80 ms). Several transport channels (e.g., FACHs) are in turn mapped at the physical layer onto a Secondary Common Control Physical CHannel (S-CCPCH) for transmission over the air interface between a Node B 150 and a UE 110.")

- Cao, page 2 ("In this paper, we are interested in cell-structured wireless networks. In such networks, the service area is divided into cells, and each cell has a base station. Within a cell mobile hosts communicate via the base station, and base stations are connected via wireline networks. The communication between a mobile host and a base station may consist of more than one traffic flow (or session). The base station is responsible for scheduling both downlink (from base station to mobile hosts) and uplink (from mobile hosts to base station) packet transmissions between the mobile hosts and itself. All the downlink packets are queued at the base station; therefore, the base station has full knowledge of the status of downlink queues. For uplink packet transmissions, mobile hosts need to send their transmission requests and queue status, if necessary, to the base station. The base station performs uplink scheduling based on these requests and related information. Although we assume the above model for the wireless network, the algorithms to be discussed are not necessarily only applicable in this model.")

Combining the prior art identified in Exhibits I1-I12 with any one of the above exemplary Receive Single Allocation of Uplink Resources References would have amounted to applying a known technique to a known device ready for improvement to yield predictable results. Furthermore, the prior art and exemplary Receive Single Allocation of Uplink Resources References are in the same field of endeavor (e.g., methods and systems for transmission scheduling in wireless networks) and given the design needs (e.g., improving techniques for transmission scheduling in wireless networks), combined with a finite number of identified, predictable solutions (e.g., expanding beyond existing techniques for transmission scheduling in wireless networks), a POSITA would have been motivated to combine the teachings of these references. Alternatively, each of the references provided in Exhibits I1-I12 alone renders this element obvious, in view of the knowledge and skill of a POSITA. That is, it would have been obvious in the view of one of ordinary skill in the art to add the above limitations to any one or

more of the references provided in Exhibits I1-I12. A POSITA would have been motivated to incorporate receiving single allocation of uplink resources into existing techniques for transmission scheduling in wireless networks, and such a combination would have been within that person's skill. As demonstrated in the exemplary Receive Single Allocation of Uplink Resources References listed above, receiving single allocation of uplink resources was well-known in the art by the time of the Asserted Patent's claimed invention and thus, adding it to any one or more of the references provided in Exhibits I1-I12 would have amounted to applying a known technique to a known device ready for improvement to yield predictable results.

4. The First Iteration Selection from a Subset of Radio Bearers Based on Received Parameters References

The First Iteration Selection from a Subset of Radio Bearers Based on Received Parameters References are: Bucknell, Yi, Fox, Cao, Gerkis, and Peisa. The relevant claims and/or claim elements of the First Iteration Selection from a Subset of Radio Bearers Based on Received Parameters References are identified below:

Patent	Claim	Claim Language
'138	1	"wherein in the first iteration, the selection of the data is selected from a subset of the plurality of radio bearers based on the received parameters"

To the extent Intellectual Ventures contends that an anticipatory reference in Exhibits I1-I12 fails to disclose these claims and/or claim elements, such reference can be combined with the corresponding disclosures from any one or more of the First Iteration Selection from a Subset of Radio Bearers Based on Received Parameters References to render it obvious under 35 U.S.C. § 103(a), at least based on Intellectual Ventures' Infringement Contentions, apparent claim constructions, and application of the claims to the Accused Instrumentalities, as best as they can be deciphered.

One of ordinary skill in the art would have been motivated to combine any one or more of the references provided in Exhibits I1-I12 with any one or more of the above exemplary First Iteration Selection from a Subset of Radio Bearers Based on Received Parameters References to improve the function and utility of the same, and such a combination would have been within that person's skill. For example, each of the First Iteration Selection from a Subset of Radio Bearers Based on Received Parameters References describe techniques for selecting from a subset of radio bearers based on received parameters:

- Bucknell, [0026] ("Strict priority based selection: In this case each MAC-d flow is assigned a priority. Then for the first selection, data packets are taken from the queue having the highest priority until the resource available for the first portion 90 is filled. If this queue becomes empty, data packets are taken from the queue with the next highest priority and so on. For the second portion 95 the same procedure is carried out, but for a subset of the queues. Suitable selection of the subset can enable the multiplexing apparatus 300 to avoid starvation of particular queues, for example to enable a delay criterion to be met.")

- Yi, [0057] ("This method relates to randomly transmitting high priority data (i.e., important data) repetitively several times performed by a particular radio protocol layer. The repetitive transmission may be based upon feedback information from the receiving side (receiver) or without such feedback information. Also, for repetitive transmissions without feedback from the receiving side, the data with high priority may be consecutively transmitted repeatedly, or after initially transmitting once, the high priority data may be selectively transmitted repeatedly during a selected duration when no other data needs to be transmitted or a small amount of other data needs to be transmitted. For either method, the radio protocol layer requires a function of storing the important (priority) data to allow repetitive transmission thereof.")

- Fox, 6:57-67 ("When the mobile terminal 1 receives from the network core 12 the grant of permission to send data in the uplink, the terminal 1 transmits data from each of the queues in order of priority and sends packets within the guaranteed bit rate for that queue on receipt of the grant. If there is still capacity in the grant after transmission of the guaranteed data of the first priority queue 104, the mobile terminal then transmits the data from the second priority queue 100 up to the guaranteed bit rate. This process is repeated until either the grant capacity is exhausted or all the queues have been served to their guaranteed bit rates.")

- Cao, page 9 ("PRADOS is based on the idea of Backward Earliest Due Date First (B-EDF) with priority [28] and combines it with a leaky bucket traffic regulator. Each connection is associated with a priority number according to which traffic class it belongs. The traffic classes and the priority assignments are shown in Table 1. The

greater the priority number, the higher the priority of a connection. Additionally, a token pool is introduced for each connection. Tokens are generated at a fixed rate equal to the mean cell rate, and the size of the pool is the maximum burst size of a connection. In ATM, the information of the traffic characteristics of a connection can be obtained from the traffic contract of the connection. There are no bandwidth guarantees for UBR traffic, and so no token pool is available for UBR connections. The scheduler takes into account the priority class, contractual characteristics of the traffic, and delay constraints in slot allocation.")

- Gerkis, 6:10-20 ("As will now be apparent, the present disclosure provides QoS services for data flows with wildly different requirements over a link that has time varying capacities. The multiple logical channels queues share a single link and yet each queue can be provided with different QoS attributes appropriate to its needs even while the data transmission capacity of the link changes with time. In the downlink direction, the link can be structured into multiple channels and the logical channel queues can be mapped to one or more of these channels. These channels can include dedicated channels, each dedicate to a link between the base station 44 and a CPE 48, with variable data transmission capacities and one or more channels can be broadcast channels from the base station 44 to several, or all, of CPEs 48. In the uplink, the logical channel queues are mapped to a single dedicated channel that can have a variable data transmission capacity.")

- Peisa, 10:29-56 ("With reference now to FIG. 4, an exemplary method in flowchart form for allocating bandwidth resources to data flow streams between entities in the exemplary second layer architecture of FIG. 3 is illustrated generally at 400. The flowchart 400 is a flow diagram of a method of allocating bandwidth resources to, for example, the input flow streams of a MAC entity of the layer 2 of FIG. 3. Generally, an exemplary method in accordance with the flowchart 400 may follow the following steps. First, input flows are received at RLCs and the data is buffered (step 405). Information on buffer fill levels is passed to the MAC entity (step 410). After the information on buffer fill levels is passed, the fair MAC bandwidth share for each input flow is computed (step 415). The computed fair share of each is then adjusted by adding the contents of an associated backlog counter to the respective computed fair share (step 420). Once the computed fair shares have been adjusted, a TFC is selected from the TFC set to most closely match the adjusted fair shares (step 425). The RLC is next instructed to deliver packets to the MAC entity according to the selected TFC (step 430). The MAC entity may also schedule packets in accordance with the selected TFC (step 435). After packet scheduling, the traffic channels may be transported on the physical channel(s) (step 440). Once packet traffic has been transported, the backlog counters should be updated (step 445). The process may continue (via arrow 450) when new input flows are received at the RLCs, which buffer the data (at step.405).")

And each of the remaining references provided in Exhibits I1-I12 seek ways of transmission scheduling in wireless networks:

- Eckert, [0028] ("A data link layer protocol unit in a mobile radio device for mapping data which are to be transmitted using the mobile radio device from at least one logical channel onto at least one transport channel. The data link protocol unit has a plurality of data link layer protocol buffer storages, at least one transport format memory, at least one transport format selection unit, and a data link layer protocol buffer storage reading device. The plurality of data link layer protocol buffer storages for buffer storing logical channel data which are to be transmitted from one or more data link layer data streams of the logical channel data. The at least one transport format memory for storing a plurality of transport formats, with each transport format containing control parameters according to which the data are mapped from the at least one logical channel onto the at least one transport channel by the data link layer protocol unit, where the control parameters in at least some of the transport formats contain information regarding that or those data link layer protocol buffer storages and/or that or those data link layer data streams from which the data to be transmitted need to be transmitted in a data transmission time interval. The at least one transport format selection unit for selecting from the plurality of stored transport formats a respective transport format to be used. The a data link layer protocol buffer storage reading device which is set up such that it reads the data buffer stored in the data link layer protocol buffer storages on the basis of the selected transport format.")

- 25.321 V6.8.0, 4.2.3.1 ("this functionality is used to transmit the information received from MAC-d on RACH based on logical channel priorities. This function is related to TF selection."); 6.1 ("priority handling between data flows of one UE")\

- R2-061415, page 1 ("The QoS concept developed in 3GPP TSG-SA WG2 [1] builds on a paradigm of network-controlled QoS for operator-controlled services (e.g., IMS Multimedia Telephony). This is achieved by Network-Initiated SAE Bearer establishment / modification to assign bearer QoS parameters to an SAE Bearer and the corresponding SAE Radio Bearer (RB), and to install uplink packet filters in the UE and downlink packet filters in the PCEF that control which Service Data Flows (SDFs) are mapped onto which RB in the uplink and downlink direction, respectively. An integral component of providing operator-controlled QoS is a solution that allows an operator to control the partitioning of its aggregate cell bandwidth between the RBs of the different QoS Classes. In this contribution, we argue that in order to be able to effectively give the operator control over how this aggregate cell capacity in the LTE uplink is partitioned, the standard must support the possibility to do uplink scheduling on a finer granularity than that provided by E-DCH Rel 6.")

Combining the prior art identified in Exhibits I1-I12 with any one of the above exemplary First Iteration Selection from a Subset of Radio Bearers Based on Received Parameters References would have amounted to applying a known technique to a known device ready for improvement to yield predictable results. Furthermore, the prior art and exemplary First Iteration Selection from a Subset of Radio Bearers Based on Received Parameters References are in the same field of

endeavor (*e.g.*, methods and systems for transmission scheduling in wireless networks) and given the design needs (*e.g.*, improving techniques for transmission scheduling in wireless networks), combined with a finite number of identified, predictable solutions (*e.g.*, expanding beyond existing techniques for transmission scheduling in wireless networks), a POSITA would have been motivated to combine the teachings of these references.

Alternatively, each of the references provided in Exhibits I1-I12 alone renders this element obvious, in view of the knowledge and skill of a POSITA. That is, it would have been obvious in the view of one of ordinary skill in the art to add the above limitations to any one or more of the references provided in Exhibits I1-I12. A POSITA would have been motivated to incorporate selecting from a subset of radio bearers based on received parameters into existing techniques for transmission scheduling in wireless networks, and such a combination would have been within that person's skill. As demonstrated in the exemplary First Iteration Selection from a Subset of Radio Bearers Based on Received Parameters References listed above, selecting from a subset of radio bearers based on received parameters was well-known in the art by the time of the Asserted Patent's claimed invention and thus, adding it to any one or more of the references provided in Exhibits I1-I12 would have amounted to applying a known technique to a known device ready for improvement to yield predictable results.

5. The Second Iteration Selection Based on Buffered Data References

The Second Iteration Selection Based on Buffered Data References are: Bucknell, Yi, Fox, Cao, Gerkis, and Peisa. The relevant claims and/or claim elements of the Second Iteration Selection Based on Buffered Data References are identified below:

Patent	Claim	Claim Language
'138	1	"wherein in the second iteration, the selection of the data is based on buffered data for respective radio bearers"

To the extent Intellectual Ventures contends that an anticipatory reference in Exhibits I1-I12 fails to disclose these claims and/or claim elements, such reference can be combined with the corresponding disclosures from any one or more of the Second Iteration Selection Based on Buffered Data References to render it obvious under 35 U.S.C. § 103(a), at least based on Intellectual Ventures' Infringement Contentions, apparent claim constructions, and application of the claims to the Accused Instrumentalities, as best as they can be deciphered.

One of ordinary skill in the art would have been motivated to combine any one or more of the references provided in Exhibits I1-I12 with any one or more of the above exemplary Second Iteration Selection Based on Buffered Data References to improve the function and utility of the same, and such a combination would have been within that person's skill. For example, each of the Second Iteration Selection Based on Buffered Data References describe techniques for selecting based on buffered data:

- Bucknell, [0027] ("One or both selections for the first and second portions 90, 95 can be based on the amount of data in the respective queues, for example assigning highest priority to the queue with most data.")
- Yi, [0057] ("This method relates to randomly transmitting high priority data (i.e., important data) repetitively several times performed by a particular radio protocol layer. The repetitive transmission may be based upon feedback information from the receiving side (receiver) or without such feedback information. Also, for repetitive transmissions without feedback from the receiving side, the data with high priority may be consecutively transmitted repeatedly, or after initially transmitting once, the high priority data may be selectively transmitted repeatedly during a selected duration when no other data needs to be transmitted or a small amount of other data needs to be transmitted. For either method, the radio protocol layer requires a function of storing the important (priority) data to allow repetitive transmission thereof.")
- Cao, page 9 ("The first operation can be further divided into two steps. In the first step, the scheduler services "conforming" requests, defined as requests that belong to connections whose token pool is nonempty. UBR connections are not served in this step. Following the priority table, the scheduler serves the requests of each connection, as long as slots are available and the connection's token pool is not empty. Every time a slot is allocated to a connection, a token is removed from that connection's token pool. Within the same priority class, the scheduler gradually allocates one slot at a time to the connection that has the most tokens left in its token pool. The first step finishes

when all requests have been served or all token pools are empty. If all token pools are empty and there are still requests pending, the scheduler moves to the second step to serve "nonconforming" requests. It restarts allocating slots for connections, starting from the highest priority (CBR) down to the lowest priority (UBR). The same procedure as described above is repeated until all the requests are served.

The second part of the operation is based on the idea that, in order to maximize the fraction of ATM cells that are transmitted before their deadlines, each ATM cell should be scheduled for transmission as closely to its deadline as possible. Deadlines are calculated according to ATM connections' cell delay tolerance (CDT) requirements. The initial ordering of the slots are decided following the above idea. Then the scheduler performs some necessary slot shifting and packing operations so that deadlines are not violated and downlink and uplink transmissions are within their respective periods. To achieve high utilization of the wireless channel, PRADOS is work-conserving. This part of the operation is very similar to the B-EDF algorithm. A detailed description can be found in [27].")

- Gerkis, 13:41-67 ("In such a situation, RLC 140 will attempt to ensure that packets in such a logical channel queue are transmitted with the required time periods (to meet the latency requirements) but without ARQ or other reliability techniques being applied to it. Conversely, a file transfer, such as an ftp session, between a CPE 48 and a base station 44 can be transmitted through a logical channel queue that has defined attributes for being latency tolerant, but requiring high reliability. Similarly, fax data may be transmitted through a logical channel queue that has defined attributes for being latency intolerant and requiring high reliability, so that ARQ or other reliability techniques are applied. As mentioned, reliability techniques such as ARQ can be provided on a per logical channel basis. Further, less conventional attributes, such as higher error correcting coding levels or even radio transmission power level margins can also be defined and implemented on a per logical channel basis. Also, other attributes such as whether and which types of header compression to apply to a flow can be defined per flow.

  Further, traffic shapers can be implemented and configured on a per logical channel basis. This allows, for example, voice telephony data to be transferred over link 40 as necessary, while other data types can be data rate limited according to parameters defined by the network operator. Thus, a telephony call can be conducted unimpeded while a file transfer or other large data transfer can be subject to a leaky bucket, or other traffic shaping process.")

- Peisa, 11:1-10 ("The method may first calculate the GPS distribution for the input flows and add to the GPS values the current respective backlogs. This is performed once for each 10 ms TTI and results in a fair transmission rate for each flow. However, this rate may not be optimal as it may happen that there is not enough data to be sent in all buffers. In order to achieve optimal throughput as well as fairness, the fair GPS distribution is reduced so as to not exceed the current buffer fill level or the maximum allowed rate for any logical channel. A two step rating process is then carried out.")

And each of the remaining references provided in Exhibits I1-I12 seek ways of transmission scheduling in wireless networks:

- Eckert, [0028] ("A data link layer protocol unit in a mobile radio device for mapping data which are to be transmitted using the mobile radio device from at least one logical channel onto at least one transport channel. The data link protocol unit has a plurality of data link layer protocol buffer storages, at least one transport format memory, at least one transport format selection unit, and a data link layer protocol buffer storage reading device. The plurality of data link layer protocol buffer storages for buffer storing logical channel data which are to be transmitted from one or more data link layer data streams of the logical channel data. The at least one transport format memory for storing a plurality of transport formats, with each transport format containing control parameters according to which the data are mapped from the at least one logical channel onto the at least one transport channel by the data link layer protocol unit, where the control parameters in at least some of the transport formats contain information regarding that or those data link layer protocol buffer storages and/or that or those data link layer data streams from which the data to be transmitted need to be transmitted in a data transmission time interval. The at least one transport format selection unit for selecting from the plurality of stored transport formats a respective transport format to be used. The a data link layer protocol buffer storage reading device which is set up such that it reads the data buffer stored in the data link layer protocol buffer storages on the basis of the selected transport format.")

- 25.321 V6.8.0, 4.2.3.1 ("this functionality is used to transmit the information received from MAC-d on RACH based on logical channel priorities. This function is related to TF selection."); 6.1 ("priority handling between data flows of one UE")

- R2-061415, page 1 ("The QoS concept developed in 3GPP TSG-SA WG2 [1] builds on a paradigm of network-controlled QoS for operator-controlled services (e.g., IMS Multimedia Telephony). This is achieved by Network-Initiated SAE Bearer establishment / modification to assign bearer QoS parameters to an SAE Bearer and the corresponding SAE Radio Bearer (RB), and to install uplink packet filters in the UE and downlink packet filters in the PCEF that control which Service Data Flows (SDFs) are mapped onto which RB in the uplink and downlink direction, respectively. An integral component of providing operator-controlled QoS is a solution that allows an operator to control the partitioning of its aggregate cell bandwidth between the RBs of the different QoS Classes. In this contribution, we argue that in order to be able to effectively give the operator control over how this aggregate cell capacity in the LTE uplink is partitioned, the standard must support the possibility to do uplink scheduling on a finer granularity than that provided by E-DCH Rel 6.")

Combining the prior art identified in Exhibits I1-I12 with any one of the above exemplary Second Iteration Selection Based on Buffered Data References would have amounted to applying a known technique to a known device ready for improvement to yield predictable results.

Furthermore, the prior art and exemplary Second Iteration Selection Based on Buffered Data References are in the same field of endeavor (*e.g.*, methods and systems for transmission scheduling in wireless networks) and given the design needs (*e.g.*, improving techniques for transmission scheduling in wireless networks), combined with a finite number of identified, predictable solutions (*e.g.*, expanding beyond existing techniques for transmission scheduling in wireless networks), a POSITA would have been motivated to combine the teachings of these references.

Alternatively, each of the references provided in Exhibits I1-I12 alone renders this element obvious, in view of the knowledge and skill of a POSITA. That is, it would have been obvious in the view of one of ordinary skill in the art to add the above limitations to any one or more of the references provided in Exhibits I1-I12. A POSITA would have been motivated to incorporate selecting based on buffered data into existing techniques for transmission scheduling in wireless networks, and such a combination would have been within that person's skill. As demonstrated in the exemplary Second Iteration Selection Based on Buffered Data References listed above, selecting based on buffered data well-known in the art by the time of the Asserted Patent's claimed invention and thus, adding it to any one or more of the references provided in Exhibits I1-I12 would have amounted to applying a known technique to a known device ready for improvement to yield predictable results.

6. The Radio Bearers are Associated with PDP Context References

The Radio Bearers are Associated with PDP Context References are: Fox and Hans. The relevant claims and/or claim elements of the Radio Bearers are Associated with PDP Context References are identified below:

Patent	Claim	Claim Language
’138	5	“wherein the plurality of radio bearers are associated with at least one packet data protocol (PDP) context”

To the extent Intellectual Ventures contends that an anticipatory reference in Exhibits I1-I12 fails to disclose these claims and/or claim elements, such reference can be combined with the corresponding disclosures from any one or more of the Radio Bearers are Associated with PDP Context References to render it obvious under 35 U.S.C. § 103(a), at least based on Intellectual Ventures’ Infringement Contentions, apparent claim constructions, and application of the claims to the Accused Instrumentalities, as best as they can be deciphered.

One of ordinary skill in the art would have been motivated to combine any one or more of the references provided in Exhibits I1-I12 with any one or more of the above exemplary Radio Bearers are Associated with PDP Context References to improve the function and utility of the same, and such a combination would have been within that person’s skill. For example, each of the Radio Bearers are Associated with PDP Context References describe radio bearers associated with packet data protocol (PDP) context:

- Fox, 1:14-23 (“PDP contexts (QoS Flows) for both 2G and 3G are categorised into two groups, those which are guaranteed and those which are best-effort. The guaranteed PDP contexts have an associated guaranteed bit rate (or data rate) quantity which the network needs to provide for the PDP Context, and all PDP contexts may have a maximum bit rate. Best Effort PDP contexts do not have an associated guaranteed bit rate quantity. Normally when the guaranteed bit rate associated with a guaranteed PDP Context is not being met, the network will release the context.”)

- Hans, 3:51-4:9 (“The network protocols are, as described, referred to as PDP (Packet Data Protocol). The transport layer uses the services of the PDPs in order to transmit the user data. Example PDPs of network layer 5, 6 may include IP (Internet Protocol) and the X.25 protocol. Both the network and the transport protocols may attach control data to the user data, for example in the form of a TCP/IP header. The UMTS-specific protocols may lie underneath network layer 5, 6. Data about the data link used by the PDP is stored using each PDP in mobile wireless network 30 and in a terminal of the mobile wireless network which communicates with mobile wireless network 30, for example in mobile station 15. This data may, for example, contain parameters about quality of service QOS and is referred to as PDP context. It may be possible to operate

a PDP simultaneously using different contexts, with the contexts only differing in the parameters for quality of service QOS. Therefore, in a terminal, an IP protocol having an IP address may be operated once using a first parameter for quality of service QOS and once using a second parameter for quality of service QOS. PDP contexts may, however, also be based on different network protocols. Thus, for example, three different network protocols may run in one terminal: two IP protocols having different IP addresses and one X.25 protocol.")

And each of the remaining references provided in Exhibits I1-I12 seek ways of wireless transmission of data packets:

- Eckert, 17:63-67 ("The topmost layer of the UMTS air interface Uu is the mobile radio network layer (protocol layer 3 on the basis of the OSI reference model), having the mobile radio resource control unit 207 (Radio Resource Control protocol layer, RRC protocol layer).")

- Bucknell, [0002] ("There is a requirement in communication systems to multiplex data packets having different priorities. For example, in UMTS for an Enhanced Uplink Data Channel (E-DCH), at the Medium Access Control (MAC) layer data packets, referred to as MAC-d Protocol Data Units or MAC-d PDUs, are grouped together for transmission to form larger, enhanced PDUs termed MAC-e PDUs. When there is a continuous supply of MAC-d PDUs having the highest priority, the MAC-e PDUs can be filled with these high priority MAC-d PDUs, but when there are fewer high priority MAC-d PDUs to be transmitted, any spare capacity in the MAC-e PDUs can be used to transmit waiting MAC-d PDUs having a lower priority. In this way, a MAC-e PDU can accommodate a combination of different priorities of MAC-d PDU.")

- Yi, [0009] ("The PDCP layer is located above the RLC layer and allows data that is transmitted by using Internet Protocol (IP) packets, such as IPv4 or IPv6, to be effectively transmitted over a radio interface having a relatively smaller bandwidth. For this purpose, the PDCP layer performs a header compression function, whereby only the absolutely necessary data in the header portion of the data are transmitted, in order to increase transmission efficiency over the radio interface. Because header compression is its basic function, the PDCP layer only exists in the PS (packet switched) domain, and a single PDCP entity exists per each radio bearer (RB) for providing effective header compression function with respect to each PS service.")

- Cao, page 2 ("In this paper, we are interested in cell-structured wireless networks. In such networks, the service area is divided into cells, and each cell has a base station. Within a cell mobile hosts communicate via the base station, and base stations are connected via wireline networks. The communication between a mobile host and a base station may consist of more than one traffic flow (or session). The base station is responsible for scheduling both downlink (from base station to mobile hosts) and uplink (from mobile hosts to base station) packet transmissions between the mobile hosts and itself. All the downlink packets are queued at the base station; therefore, the base station has full knowledge of the status of downlink queues. For uplink packet

transmissions, mobile hosts need to send their transmission requests and queue status, if necessary, to the base station. The base station performs uplink scheduling based on these requests and related information. Although we assume the above model for the wireless network, the algorithms to be discussed are not necessarily only applicable in this model.")

- Gerkis, 1:39-50 ("One of the most ubiquitous data networks to date has been the Internet which is a packet data network employing the Internet Protocol (IP) as its network layer protocol. IP provides many advantages as a network layer protocol, including robustness and simplicity of implementation and one of its original principles is that the network layer need not know anything about the contents of the packets it transmits. In other words, to IP, a packet was a packet was a packet. Similarly, IP is intended to work independently of the physical layer of the network. In other words, IP is ignorant of whether the network it is operating over is an optical network or a wireline network, etc.")

- Peisa, 8:3-25 ("It is of course necessary to share the total available bandwidth between the logical channels 315. The decision to distribute the bandwidth to different transport channels is made by the MAC entity 320 for each transmission time interval by choosing a suitable TFCI. This sharing of bandwidth can be done in several ways, for example by giving an absolute preference to flows which are considered to be more important than others. This would be the easiest method to implement, but can result in a very unfair distribution of the bandwidth. Specifically, it is possible that flows that have lower priorities. are not allowed to transmit for prolonged periods of time. This can result in extremely poor performance if the flow control mechanism of a lower priority flow reacts to this. A typical example of such a flow control mechanism can be found in the present day Transmission Control Protocol (TCP) protocol used in the Internet. In existing technologies, such as Internet Protocol (IP) and Asynchronous Transfer Mode (ATM) networks, provision is made for allocating resources on a single output channel to multiple input flows. However, the algorithms used to share out the resources in such systems are not directly applicable to UMTS where multiple input flows are transmitted on respective logical output channels.")

- 25.321 V6.8.0, 3.2 ("defining "L3" as "Layer 3 (network layer)"); 4.2.3.1 ("this functionality is used to transmit the information received from MAC-d on RACH based on logical channel priorities. This function is related to TF selection."); 6.1 ("priority handling between data flows of one UE")

Combining the prior art identified in Exhibits I1-I12 with any one of the above exemplary Radio Bearers are Associated with PDP Context References would have amounted to applying a known technique to a known device ready for improvement to yield predictable results. Furthermore, the prior art and exemplary Radio Bearers are Associated with PDP Context References are in the same field of endeavor (*e.g.*, methods and systems for transmission

scheduling in wireless networks) and given the design needs (*e.g.*, improving techniques for transmission scheduling in wireless networks), combined with a finite number of identified, predictable solutions (*e.g.*, expanding beyond existing techniques for transmission scheduling in wireless networks), a POSITA would have been motivated to combine the teachings of these references.

Alternatively, each of the references provided in Exhibits I1-I12 alone renders this element obvious, in view of the knowledge and skill of a POSITA. That is, it would have been obvious in the view of one of ordinary skill in the art to add the above limitations to any one or more of the references provided in Exhibits I1-I12. A POSITA would have been motivated to incorporate radio bearers associated with PDP context into existing techniques for transmission scheduling in wireless networks, and such a combination would have been within that person's skill. As demonstrated in the exemplary Radio Bearers are Associated with PDP Context References listed above, radio bearers associated with PDP Context was well-known in the art by the time of the Asserted Patent's claimed invention and thus, adding it to any one or more of the references provided in Exhibits I1-I12 would have amounted to applying a known technique to a known device ready for improvement to yield predictable results.

7. The Receive Allocation on a Physical Shared Channel from a Scheduler in Network References

The Receive Allocation on a Physical Shared Channel from a Scheduler in Network References are: Lohr 804. The relevant claims and/or claim elements of the Receive Allocation on a Physical Shared Channel from a Scheduler in Network References are identified below:

Patent	Claim	Claim Language
'138	6	"wherein the single allocation of uplink resources is received on a physical shared channel from a scheduler in the network"

To the extent Intellectual Ventures contends that an anticipatory reference in Exhibits I1-I12 fails to disclose these claims and/or claim elements, such reference can be combined with the corresponding disclosures from any one or more of Receive Allocation on a Physical Shared Channel from a Scheduler in Network References to render it obvious under 35 U.S.C. § 103(a), at least based on Intellectual Ventures' Infringement Contentions, apparent claim constructions, and application of the claims to the Accused Instrumentalities, as best as they can be deciphered.

One of ordinary skill in the art would have been motivated to combine any one or more of the references provided in Exhibits I1-I12 with any one or more of the above exemplary Receive Allocation on a Physical Shared Channel from a Scheduler in Network References to improve the function and utility of the same, and such a combination would have been within that person's skill. For example, each of the Receive Allocation on a Physical Shared Channel from a Scheduler in Network References describe using a scheduler in the network:

- Lohr 804, Fig. 6, [0038] ("The MAC-e/es entity is depicted in more detail in FIG. 6. The MAC-es/e handles the E-DCH specific functions. The selection of an appropriate transport format for the transmission of data on E-DCH is done in the E-TFC Selection entity, which represents a function entity. The transport format selection is done according to the scheduling information (Relative Grants and Absolute Grants) received from UTRAN via L1, the available transmit power, priorities, e.g. logical channel priorities. The HARQ entity handles the retransmission functionality for the user. One HARQ entity supports multiple HARQ processes. The HARQ entity handles all HARQ related functionalities required. The multiplexing entity is responsible for concatenating multiple MAC-d PDUs into MAC-es PDUs, and to multiplex one or multiple MAC-es PDUs into a single MAC-e PDU, to be transmitted at the next TTI, and as instructed by the E-TFC selection function. It is also responsible for managing and setting the TSN per logical channel for each MAC-es PDU. The MAC-e/es entity receives scheduling information from Node B (network side) via Layer 1 signaling as shown in FIG. 6. Absolute grants are received on E-AGCH (Enhanced Absolute Grant Channel), relative grants are received on the E-RGCH (Enhanced Relative Grant Channel)."); [0110] ("One of the main aspects of the invention is the introduction of some further control information for transmission via the shared absolute grant channel, e.g. within absolute grants transmitted by a base station controlling a serving cell via the shared absolute grant channel to mobile terminals. The control information, which may be communicated in form of a flag, enables the base station to indicate to the mobile terminals, whether the absolute grant is valid for mobile terminals in soft

handover. Thereby, it is for example possible that the base station defines different maximum amounts of resources that may be utilized at maximum by the mobile terminals for uplink transmissions for a soft-handover case and a non-soft-handover case. In an exemplary embodiment of the invention the problems are mitigated by the introduction of a one-bit flag on the absolute grant channel (E-AGCH), which indicates whether the grant is valid for mobile terminals in soft-handover only.")

And each of the remaining references provided in Exhibits I1-I12 seek ways of transmission scheduling in wireless networks:

- Eckert, [0028] ("A data link layer protocol unit in a mobile radio device for mapping data which are to be transmitted using the mobile radio device from at least one logical channel onto at least one transport channel. The data link protocol unit has a plurality of data link layer protocol buffer storages, at least one transport format memory, at least one transport format selection unit, and a data link layer protocol buffer storage reading device. The plurality of data link layer protocol buffer storages for buffer storing logical channel data which are to be transmitted from one or more data link layer data streams of the logical channel data. The at least one transport format memory for storing a plurality of transport formats, with each transport format containing control parameters according to which the data are mapped from the at least one logical channel onto the at least one transport channel by the data link layer protocol unit, where the control parameters in at least some of the transport formats contain information regarding that or those data link layer protocol buffer storages and/or that or those data link layer data streams from which the data to be transmitted need to be transmitted in a data transmission time interval. The at least one transport format selection unit for selecting from the plurality of stored transport formats a respective transport format to be used. The a data link layer protocol buffer storage reading device which is set up such that it reads the data buffer stored in the data link layer protocol buffer storages on the basis of the selected transport format.")

- Bucknell, [0004]-[0005] ("An object of the invention is to enable flexible and efficient multiplexing of data packets.")

  According to a first aspect of the invention there is provided a method of multiplexing data packets having different assigned priorities, comprising: receiving data packets; operating a queue for each different priority of data packet; assembling a group of the data packets wherein a first portion of the group is populated with data packets selected from one or more of the queues according to a first rule and a second portion of the group is populated with data packets selected from one or more of the queues according to a second rule; and transmitting the group.")

- Yi, [0025] ("Thus, the inventors of the present invention recognized such drawbacks of the related art and provided a solution by providing a particular protocol layer of the transmitting side (transmitter) that initially receives service data units (SDUs) having the same priority through a single stream from an upper layer, processes these SDUs to generate protocol data units (PDUs) having different priorities, and uses respectively

different transmission methods to transmit the generated PDUs over a radio interface in order to guarantee their respectively different quality of service (QoS) requirements.")

- Cao, page 2 ("In this paper, we are interested in cell-structured wireless networks. In such networks, the service area is divided into cells, and each cell has a base station. Within a cell mobile hosts communicate via the base station, and base stations are connected via wireline networks. The communication between a mobile host and a base station may consist of more than one traffic flow (or session). The base station is responsible for scheduling both downlink (from base station to mobile hosts) and uplink (from mobile hosts to base station) packet transmissions between the mobile hosts and itself. All the downlink packets are queued at the base station; therefore, the base station has full knowledge of the status of downlink queues. For uplink packet transmissions, mobile hosts need to send their transmission requests and queue status, if necessary, to the base station. The base station performs uplink scheduling based on these requests and related information. Although we assume the above model for the wireless network, the algorithms to be discussed are not necessarily only applicable in this model.")

- Gerkis, 1:28-35 ("The present disclosure relates to an apparatus, system and method for transmitting data flows that have different quality of service (QoS) attributes over a network link. More specifically, the present disclosure relates to an apparatus, system and method for providing and managing QoS for data flows transmitted over at least one link in a data network capable of transmitting data with different QoS requirements and/or attributes.")

- Peisa, 1:27-32 ("The present invention relates in general to the field of communications systems, and in particular, by way of example but not limitation, to scheduling packets of data/informational flows having differing priority levels in a communications system.")

- 25.321 V6.8.0, 4.2.3.1 ("this functionality is used to transmit the information received from MAC-d on RACH based on logical channel priorities. This function is related to TF selection."); 6.1 ("priority handling between data flows of one UE")

- R2-061415, page 1 ("The QoS concept developed in 3GPP TSG-SA WG2 [1] builds on a paradigm of network-controlled QoS for operator-controlled services (e.g., IMS Multimedia Telephony). This is achieved by Network-Initiated SAE Bearer establishment / modification to assign bearer QoS parameters to an SAE Bearer and the corresponding SAE Radio Bearer (RB), and to install uplink packet filters in the UE and downlink packet filters in the PCEF that control which Service Data Flows (SDFs) are mapped onto which RB in the uplink and downlink direction, respectively.

  An integral component of providing operator-controlled QoS is a solution that allows an operator to control the partitioning of its aggregate cell bandwidth between the RBs of the different QoS Classes. In this contribution, we argue that in order to be able to effectively give the operator control over how this aggregate cell capacity in the LTE

uplink is partitioned, the standard must support the possibility to do uplink scheduling on a finer granularity than that provided by E-DCH Rel 6.")

- Fox, 1:5-7 ("This application relates to a method of and apparatus for transmitting data stored in the plurality of queues, each queue having a respective transmission priority.")
- Lohr, 1:3-7 ("The present invention relates to a method for transmitting data from a mobile terminal to a radio access network of a mobile communication system, the mobile terminal comprising a medium access control entity and to a mobile terminal using individual priorities. Further the invention relates to a method and mobile terminal allowing a scheduling mode dependent scheduling of data transmissions.")

Combining the prior art identified in Exhibits I1-I12 with any one of the above exemplary Receive Allocation on a Physical Shared Channel from a Scheduler in Network References would have amounted to applying a known technique to a known device ready for improvement to yield predictable results. Furthermore, the prior art and exemplary Receive Allocation on a Physical Shared Channel from a Scheduler in Network References are in the same field of endeavor (*e.g.*, methods and systems for transmission scheduling in wireless networks) and given the design needs (*e.g.*, improving techniques for transmission scheduling in wireless networks), combined with a finite number of identified, predictable solutions (*e.g.*, expanding beyond existing techniques for transmission scheduling in wireless networks), a POSITA would have been motivated to combine the teachings of these references.

Alternatively, each of the references provided in Exhibits I1-I12 alone renders this element obvious, in view of the knowledge and skill of a POSITA. That is, it would have been obvious in the view of one of ordinary skill in the art to add the above limitations to any one or more of the references provided in Exhibits I1-I12. A POSITA would have been motivated to incorporate using a scheduler in the network into existing techniques for transmission scheduling in wireless networks, and such a combination would have been within that person's skill. As demonstrated in the exemplary Receive Allocation on a Physical Shared Channel from a Scheduler in Network References listed above, using a scheduler in the network was well-known in the art by the time

of the Asserted Patent's claimed invention and thus, adding it to any one or more of the references provided in Exhibits I1-I12 would have amounted to applying a known technique to a known device ready for improvement to yield predictable results.

J. The '670 Patent

NAME	DESCRIPTION:				
	The Master Information Block References	The Frequency and Time Resources References	The Control Information References	The Bandwidth Switching References	The PDSCH References
Berggren			✓	✓	
Wallen	✓	✓	✓	✓	✓
Dahlman	✓		✓		✓
Tripathi	✓	✓			✓
R1-113659		✓			✓

1. The Master Information Block References

The Master Information Block References are: Wallen, Dahlman, and Tripathi. The relevant claims and/or claim elements of the Master Information Block References are identified below:

Patent	Claim	Claim Language
'670	1[b]	"the transceiver and the processor are configured to receive a primary synchronization signal (PSS), a secondary synchronization signal (SSS), and a physical broadcast channel (PBCH) including a master information block (MIB),"

To the extent Intellectual Ventures contends that an anticipatory reference in Exhibits K1-K6 fails to disclose these claims and/or claim elements, such reference can be combined with the corresponding disclosures from any one or more of the Master Information Block References to render it obvious under 35 U.S.C. § 103(a), at least based on Intellectual Ventures' Infringement Contentions, apparent claim constructions, and application of the claims to the Accused Instrumentalities, as best as they can be deciphered.

One of ordinary skill in the art would have been motivated to combine any one or more of the references provided in Exhibits K1-K6 with any one or more of the above exemplary Master Information Block References to improve the function and utility of the same, and such a combination would have been within that person's skill. For example, each of the Master Information Block References describe techniques for receiving information from a master information block:

- Wallen, [0060] ("FIG. 7 is another depiction of the structure of the radio interface (time-frequency grid) of a legacy LTE FDD cell. It can be seen that the radiofrequency spectrum allocated to the legacy LTE FDD cell is wider than the smallest downlink system bandwidth of 1.4 MHz (72 subcarriers or 6 RBs). Subframes 1-3 and 6-8 may be used for MBSFN or may be signaled to be used for other purposes, in which case a UE cannot expect reference signals in more than the first OFDM symbol interval. (To avoid cluttering the figure, it does not show each of the OFDM symbol intervals within each subframe.) The Physical Broadcast Channel (PBCH) (carrying the MIB) and synchronization signals are transmitted at prior known OFDM symbol positions over the central 72 subcarriers.")

- Dahlman, 305 ("In LTE, system information is delivered by two different mechanisms relying on two different transport channels: • A limited amount of system information, corresponding to the so-called Master- Information Block (MIB), is transmitted using the BCH. • The main part of the system information, corresponding to different so-called System-Information Blocks (SIBs), is transmitted using the downlink shared channel (DL-SCH). It should be noted that system information in both the MIB and the SIBs corresponds to the BCCH logical channel. Thus, as also illustrated in Figure 8.7 in Chapter 8, BCCH can be mapped to both BCH and DL-SCH depending on the exact BCCH information.")

- Tripathi, 6 ("The UE is now prepared to download the master information block (MIB) that the eNodeB broadcasts over the PBCH. The MIB (scrambled with cellid) reception provides the UE with LTE downlink bandwidth (DL BW), number of transmit antennas, system frame number (SFN), PHICH duration, and its gap. After reading the MIB, the UE needs to get system information blocks (SIBs) to know the other system-related information broadcasted by the eNodeB. SIBs are carried in the PDSCH, whose information is obtained from the PDCCH indicated by the control format indicator (CFI) field. In order to get CFI information, the UE attempts to read the PCFICH which are broadcasted on the first OFDM symbol of the subframe as shown above in Figure 8. Once bandwidth selection is successful, the UE attempts to decode the DCI (DL control information) to acquaint with SIB Type 1 and 2 to get PLMN id, cell barring status, and various Rx thresholds required in cell selection.")

And each of the remaining references provided in Exhibits K1-K6 seek ways of improving master information block utilization:

- Berggren, [0074] ("For establishing a connection to a cell in LTE, a UE first detects and synchronizes to the cell by receiving the synchronization signals, and then acquires the system information needed for operating within a cell. The downlink system bandwidth is included in the so called master information block (MIB) which contains only a small part of the system information and is transmitted with a periodicity of 40 ms on the BCH (Broadcast Channel). The BCH is a transport channel which in turn is mapped to the PBCH (Physical BCH) which is always located in the 6 central RBs of the component carrier. Hence, the UE can receive the PBCH (and thus the MIB) without any prior information of the system bandwidth. The information contained in the MIB makes it possible to receive the channels that occupy the whole component earner bandwidth, e.g., the control information in the PDCCH (Physical Downlink Control Channel) associated with the PDSCH (Physical Downlink Shared Channel), which contains the scheduled data transmissions.")

- R1-113659, 4 ("The PSS/SSS/PBCH is transmitted in the central 6 PRBs, and the low cost UE with narrowband can receive the information, so that this topic does not seem to be an issue for bandwidth reduction. However it should be noted that the narrowband PDCCH for the low cost UE has to be introduced due to the bandwidth reduction but the low cost UE needs some necessary information to monitor the narrowband PDCCH, e.g. frequency location. This location may be fixed in the specification, but a fixed location it is not very flexible. Further when considering ICIC, the frequency location of the narrowband PDCCH may be probably cell specific. Therefore, since the PBCH may be the only channel for low cost UEs to obtain the necessary information of the narrowband PDCCH and PHICH, some extensions may be introduced.")

- R1-114188, 1-2 ("Some of the reserved bits in PBCH may be used for MTC UEs, or enhanced PBCH might be transmitted within the central 1.4MHz-wide part. The reserved bits in PBCH or the enhanced PBCH are used to inform MTC UE that the cell support MTC-UE specific physical channels.")

Combining the prior art identified in Exhibits K1-K6 with any one of the above exemplary Master Information Block References would have amounted to applying a known technique to a known device ready for improvement to yield predictable results. Furthermore, the prior art and exemplary Master Information Block References are in the same field of endeavor (*e.g.*, methods and systems for communicating using a subordinate carrier of a host carrier) and given the design needs (*e.g.*, reducing transceiver complexity on LTE networks), combined with a finite number of

identified, predictable solutions (*e.g.*, expanding beyond existing LTE communication methods), a POSITA would have been motivated to combine the teachings of these references.

Alternatively, each of the references provided in Exhibits K1-K6 alone renders this element obvious, in view of the knowledge and skill of a POSITA. That is, it would have been obvious in the view of one of ordinary skill in the art to add the above limitations to any one or more of the references provided in Exhibits K1-K6. A POSITA would have been motivated to incorporate techniques for configuring the receiver to receive MIB1, and such a combination would have been within that person's skill. As demonstrated in the exemplary Master Information Block References listed above, methods for MIB1 reception and configuration were well-known in the art by the time of the Asserted Patent's claimed invention and thus, adding it to any one or more of the references provided in Exhibits K1-K6 would have amounted to applying a known technique to a known device ready for improvement to yield predictable results.

2. The Frequency and Time Resources References

The Frequency and Time Resources References are: Wallen, Tripathi, and R1-113659. The relevant claims and/or claim elements of the Frequency and Time Resources References are identified below:

Patent	Claim	Claim Language
'670	1[e]	"wherein the MIB includes an indication of frequency resources and time resources for use in acquiring additional system information; and"

To the extent Intellectual Ventures contends that an anticipatory reference in Exhibits K1-K6 fails to disclose these claims and/or claim elements, such reference can be combined with the corresponding disclosures from any one or more of the Frequency and Time Resources References to render it obvious under 35 U.S.C. § 103(a), at least based on Intellectual Ventures' Infringement

Contentions, apparent claim constructions, and application of the claims to the Accused Instrumentalities, as best as they can be deciphered.

One of ordinary skill in the art would have been motivated to combine any one or more of the references provided in Exhibits K1-K6 with any one or more of the above exemplary Frequency and Time Resources References to improve the function and utility of the same, and such a combination would have been within that person's skill. For example, each of the Frequency and Time Resources References describe techniques for utilizing frequency and time resources to acquire additional information:

- Wallen, [0080] ("The MTC device only needs to support a subset of the cell system bandwidth, and might also have different requirements with respect to response time compared to legacy system (e.g., LTE) mobile broadband devices. Accordingly, the MTC device regularly performs a cell search in order to find a suitable cell to camp on/connect to (step 1101). This is done using synchronization signals defined by the legacy system (e.g., in an LTE system, the primary and secondary synchronization signals, "PSS" and "SSS"). Even in a legacy system, this only requires a system bandwidth of 1.4 MHz, the signal itself occupying approximately 1 MHz, so the MTC device is fully capable of performing this procedure. Accordingly, any of the cell search algorithms that are known in the art and suitable for performing cell search in the legacy system can be used.")

- Tripathi, 6 ("The UE is now prepared to download the master information block (MIB) that the eNodeB broadcasts over the PBCH. The MIB (scrambled with cell id) reception provides the UE with LTE downlink bandwidth (DL BW), number of transmit antennas, system frame number (SFN), PHICH duration, and its gap. After reading the MIB, the UE needs to get system information blocks (SIBs) to know the other system-related information broadcasted by the eNodeB. SIBs are carried in the PDSCH, whose information is obtained from the PDCCH indicated by the control format indicator (CFI) field. In order to get CFI information, the UE attempts to read the PCFICH which are broadcasted on the first OFDM symbol of the subframe as shown above hr Figure 8. Once bandwidth selection is successful, the UE attempts to decode the DCI (DL control information) to acquaint with SIB Type 1 and 2 to get PLMN id. cell barring status, and various Rx thresholds required in cell selection.")

- R1-113659, 4 ("Although the SIB and most of the paging messages are common for all UEs, in order to support low cost UEs, the eNB has to schedule these messages within narrowband. This scheduling may affect the receiving performance of the UEs in cell edge. Furthermore, considering the applications of the low cost UEs, some information in current SIBs may be unnecessary, and further optimizing may be introduced. Therefore, the paging and SIB for low cost UE should be fully considered, though it

may be out of the RAN1 scope. Some possible solutions listed below may affect RAN1 specifications: • Introduce segmentation for current Paging/SIB messages; • Introduce dedicated paging/SIB messages for low cost UEs, which are scheduled via narrowband PDCCH; • Introduce dedicated paging/SIB messages for low cost UEs, which are based on persistent scheduling, similar to the SIBs in UMTS.")

And each of the remaining references provided in Exhibits K1-K6 seek ways of improving master frequency and time resources utilization:

- Berggren, [0074] ("For establishing a connection to a cell in LTE, a UE first detects and synchronizes to the cell by receiving the synchronization signals, and then acquires the system information needed for operating within a cell. The downlink system bandwidth is included in the so called master information block (MIB) which contains only a small part of the system information and is transmitted with a periodicity of 40 ms on the BCH (Broadcast Channel). The BCH is a transport channel which in turn is mapped to the PBCH (Physical BCH) which is always located in the 6 central RBs of the component carrier. Hence, the UE can receive the PBCH (and thus the MIB) without any prior information of the system bandwidth. The information contained in the MIB makes it possible to receive the channels that occupy the whole component carrier bandwidth, e.g., the control information in the PDCCH (Physical Downlink Control Channel) associated with the PDSCH (Physical Downlink Shared Channel), which contains the scheduled data transmissions.")

- Dahlman, 305 ("In LTE, system information is delivered by two different mechanisms relying on two different transport channels: • A limited amount of system information, corresponding to the so-called Master- Information Block (MIB), is transmitted using the BCH. • The main part of the system information, corresponding to different so-called System-Information Blocks (SIBs), is transmitted using the downlink shared channel (DL-SCH). It should be noted that system information in both the MIB and the SIBs corresponds to the BCCH logical channel. Thus, as also illustrated in Figure 8.7 in Chapter 8, BCCH can be mapped to both BCH and DL-SCH depending on the exact BCCH information.")

- R1-114188, 1 ("In our contribution [1], several approaches to low cost MTC UE are discussed, and it is concluded that most of the approaches would not add new functions to the LTE L1 specifications and could be left to implementation. However, reduced reception/transmission bandwidths of MTC UE could largely impact on the specifications. In this contribution, the Rx/Tx bandwidth reduction is discussed.")

Combining the prior art identified in Exhibits K1-K6 with any one of the above exemplary Frequency and Time Resources References would have amounted to applying a known technique to a known device ready for improvement to yield predictable results. Furthermore, the prior art and exemplary Frequency and Time Resources References are in the same field of endeavor (*e.g.*,

methods and systems for communicating using a subordinate carrier of a host carrier) and given the design needs (*e.g.*, reducing transceiver complexity on LTE networks), combined with a finite number of identified, predictable solutions (*e.g.*, expanding beyond existing LTE communication methods), a POSITA would have been motivated to combine the teachings of these references.

Alternatively, each of the references provided in Exhibits K1-K6 alone renders this element obvious, in view of the knowledge and skill of a POSITA. That is, it would have been obvious in the view of one of ordinary skill in the art to add the above limitations to any one or more of the references provided in Exhibits K1-K6. A POSITA would have been motivated to incorporate techniques for incorporating time and frequency resources in the MIB1, and such a combination would have been within that person's skill. As demonstrated in the exemplary Frequency and Time Resources References listed above, methods for incorporating time and frequency resources in the MIB1 were well-known in the art by the time of the Asserted Patent's claimed invention and thus, adding it to any one or more of the references provided in Exhibits K1-K6 would have amounted to applying a known technique to a known device ready for improvement to yield predictable results.

3. The Control Information References

The Control Information References are: Berggren, Wallen, and Dahlman. The relevant claims and/or claim elements of the Control Information References are identified below:

Patent	Claim	Claim Language
'670	1[g]	"wherein the indicated frequency resources and the time resources include control information for use by the UE to acquire a system information block 1."

To the extent Intellectual Ventures contends that an anticipatory reference in Exhibits K1-K6 fails to disclose these claims and/or claim elements, such reference can be combined with the corresponding disclosures from any one or more of the Control Information References to render

it obvious under 35 U.S.C. § 103(a), at least based on Intellectual Ventures' Infringement Contentions, apparent claim constructions, and application of the claims to the Accused Instrumentalities, as best as they can be deciphered.

One of ordinary skill in the art would have been motivated to combine any one or more of the references provided in Exhibits K1-K6 with any one or more of the above exemplary Control Information References to improve the function and utility of the same, and such a combination would have been within that person's skill. For example, each of the Control Information References describe techniques for identifying control information for use by the UE:

- Berggren, [0075] ("The main part of the system information, excluding the MIB, is transmitted on other so called system information blocks (SIBs). The SIBs are mapped to different system information messages (SIs), which are transmitted with different periodicities, longer than 40 ms. The SIBs are transmitted on the DL-SCH (Downlink-Shared Channel) transport channel which is mapped to the PDSCH, i.e., they are scheduled through the PDCCH. There are a number of different SIBs, e.g., SIB1 contains information if the UE is allowed to camp on the cell and scheduling information of the other system information, whereas SIB2 contains information needed for the UE to access the cell.")

- Wallen, [0018] ("In accordance with one aspect of the present invention, the foregoing and other objects are achieved in, for example, methods and apparatuses for operating a network node that serves a host cell in a cellular communication system. Such operation includes, at one or more first time intervals, transmitting first control channel information on a control channel that extends over a first bandwidth of a radiofrequency resource, wherein the first control channel communicates information that is necessary to enable a first type of communication device to establish a connection with the host cell.")

- Dahlman, 308 ("As already mentioned, the MIB on the BCH only includes a very limited part of the system information. The main part of the system information is instead included in different System-Information Blocks (SIBs) that are transmitted using the DL-SCH. The presence of system information on DL-SCH in a subframe is indicated by the transmission of a corresponding PDCCH marked with a special System-Information RNTI (SI-RNTI). Similar to the PDCCH providing the scheduling assignment for "normal" DL-SCH transmission, this PDCCH also indicates the transport format and physical resource (set of resource blocks) used for the system-information transmission.")

And each of the remaining references provided in Exhibits K1-K6 seek ways of improving control information utilization:

- Tripathi, 6 ("The UE is now prepared to download the master information block (MIB) that the eNodeB broadcasts over the PBCH. The MIB (scrambled with cell id) reception provides the UE with LTE downlink bandwidth (DL BW), number of transmit antennas, system frame number (SFN), PHICH duration, and its gap. After reading the MIB, the UE needs to get system information blocks (SIBs) to know the other system-related information broadcasted by the eNodeB. SIBs are carried in the PDSCH, whose information is obtained from the PDCCH indicated by the control format indicator (CFI) field. In order to get CFI information, the UE attempts to read the PCFICH which are broadcasted on the first OFDM symbol of the subframe as shown above in Figure 8. Once bandwidth selection is successful, the UE attempts to decode the DCI (DL control information) to acquaint with SIB Type 1 and 2 to get PLMN id, cell barring status, and various Rx thresholds required in cell selection.")

- R1-113659, 5 ("Proposal 3: If the proposal 1&2 are agreed, it is further proposed to consider the following issues of the bandwidth reduction for low cost UE. - How to introduce the narrowband downlink control channel - How to send the paging and SIB to narrowband low cost UE.")

- R1-114188, 2 ("Proposal: To minimize impacts on LTE L1 specifications, it is proposed that MTC UE access to DL/UL component carriers only whose transmission bandwidths are the same as the MTC UE's.")

Combining the prior art identified in Exhibits K1-K6 with any one of the above exemplary Control Information References would have amounted to applying a known technique to a known device ready for improvement to yield predictable results. Furthermore, the prior art and exemplary Control Information References are in the same field of endeavor (*e.g.*, methods and systems for communicating using a subordinate carrier of a host carrier) and given the design needs (*e.g.*, reducing transceiver complexity on LTE networks), combined with a finite number of identified, predictable solutions (*e.g.*, expanding beyond existing LTE communication methods), a POSITA would have been motivated to combine the teachings of these references.

Alternatively, each of the references provided in Exhibits K1-K6 alone renders this element obvious, in view of the knowledge and skill of a POSITA. That is, it would have been obvious in the view of one of ordinary skill in the art to add the above limitations to any one or more of the

references provided in Exhibits K1-K6. A POSITA would have been motivated to incorporate techniques for including control information in the time and frequency resources, and such a combination would have been within that person's skill. As demonstrated in the exemplary Control Information References listed above, methods for incorporating control information were well-known in the art by the time of the Asserted Patent's claimed invention and thus, adding it to any one or more of the references provided in Exhibits K1-K6 would have amounted to applying a known technique to a known device ready for improvement to yield predictable results.

4. The Bandwidth Switching References

The Bandwidth Switching References are: Berggren and Wallen. The relevant claims and/or claim elements of the Bandwidth Switching References are identified below:

Patent	Claim	Claim Language
'670	5	"5. The UE of claim 4 wherein the transceiver and the processor are configured to switch between the plurality of bandwidth portions at different times."

To the extent Intellectual Ventures contends that an anticipatory reference in Exhibits K1-K6 fails to disclose these claims and/or claim elements, such reference can be combined with the corresponding disclosures from any one or more of the Bandwidth Switching References to render it obvious under 35 U.S.C. § 103(a), at least based on Intellectual Ventures' Infringement Contentions, apparent claim constructions, and application of the claims to the Accused Instrumentalities, as best as they can be deciphered.

One of ordinary skill in the art would have been motivated to combine any one or more of the references provided in Exhibits K1-K6 with any one or more of the above exemplary Bandwidth Switching References to improve the function and utility of the same, and such a combination would have been within that person's skill. For example, each of the Bandwidth Switching References describe techniques for switching bandwidth over time:

- Berggren, [0261] ("Embodiments within the scope of the present disclosure also include a computer program product with computer program code A1, schematically shown in FIG. 11, which, when executed by a computer, will enable the computer to perform the steps of the above described inventive method. Specifically, the present disclosure relates to a computer program product with computer program code A1 which, when executed, will enable a base station or a user equipment to perform the steps of the inventive method described above.")

- Wallen, [0018] ("In accordance with one aspect of the present invention, the foregoing and other objects are achieved in, for example, methods and apparatuses for operating a network node that serves a host cell in a cellular communication system. Such operation includes, at one or more first time intervals, transmitting first control channel information on a control channel that extends over a first bandwidth of a radiofrequency resource, wherein the first control channel communicates information that is necessary to enable a first type of communication device to establish a connection with the host cell. The first type of communication device is capable of receiving a signal having the first bandwidth of the radiofrequency resource. At one or more second time intervals, a master information block is transmitted that occupies a part of the first bandwidth of the radiofrequency resource, wherein the part of the first bandwidth of the radiofrequency resource has a second bandwidth that is smaller than the first bandwidth and is receivable by a second type of communication device having reduced receive bandwidth capabilities compared to those of the first type of communication device. The master information block comprises a first part and a second part, wherein the first part comprises first part information that is necessary to enable the first type of communication device to establish the connection with the host cell. The second part comprises second part information that directly or indirectly enables the second type of communication device to obtain parameters that enable the second type of communication device to establish a connection with the host cell.")

And each of the remaining references provided in Exhibits K1-K6 seek ways of improving bandwidth utilization:

- Dahlman, 309 ("The transmission of SI-1 has only a limited flexibility. More specifically, SI-1 is always transmitted within subframe 5. However, the bandwidth or, in general, the set of resource blocks over which SI-1 is transmitted, as well as other aspects of the transport format, may vary and is signaled on the associated PDCCH.")

- Tripathi, 6 ("Cell search is the procedure by which a UE acquires time and frequency synchronization with a cell and detects the cell ID of that cell. E-UTRA cell search supports a scalable overall transmission bandwidth corresponding to 6 resource blocks (i.e., 72 subcarriers) and upwards. E-UTRA cell search is based on various signals transmitted in the downlink such as primary and secondary synchronization signals, and downlink reference signals. The primary and secondary synchronization signals are transmitted over the center 72 sub-carriers in the first and sixth subframe of each frame. Neighbor-cell search is based on the same downlink signals as the initial cell search.")

- R1-113659, 5 ("Proposal 3: If the proposal 1&2 are agreed, it is further proposed to consider the following issues of the bandwidth reduction for low cost UE. - How to introduce the narrowband downlink control channel - How to send the paging and SIB to narrowband low cost UE.")

- R1-114188, 2 ("Proposal: To minimize impacts on LTE L1 specifications, it is proposed that MTC UE access to DL/UL component carriers only whose transmission bandwidths are the same as the MTC UE's.")

Combining the prior art identified in Exhibits K1-K6 with any one of the above exemplary Bandwidth Switching References would have amounted to applying a known technique to a known device ready for improvement to yield predictable results. Furthermore, the prior art and exemplary Bandwidth Switching References are in the same field of endeavor (*e.g.*, methods and systems for communicating using a subordinate carrier of a host carrier) and given the design needs (*e.g.*, reducing transceiver complexity on LTE networks), combined with a finite number of identified, predictable solutions (*e.g.*, expanding beyond existing LTE communication methods), a POSITA would have been motivated to combine the teachings of these references.

Alternatively, each of the references provided in Exhibits K1-K6 alone renders this element obvious, in view of the knowledge and skill of a POSITA. That is, it would have been obvious in the view of one of ordinary skill in the art to add the above limitations to any one or more of the references provided in Exhibits K1-K6. A POSITA would have been motivated to incorporate techniques for switching between bandwidth portions, and such a combination would have been within that person's skill. As demonstrated in the exemplary Bandwidth Switching References listed above, bandwidth switching and allocation methods were well-known in the art by the time of the Asserted Patent's claimed invention and thus, adding it to any one or more of the references provided in Exhibits K1-K6 would have amounted to applying a known technique to a known device ready for improvement to yield predictable results.

5. The PDSCH References

The PDSCH References are: Wallen, Dahlman, Tripathi, and R1-113659. The relevant claims and/or claim elements of the PDSCH References are identified below:

Patent	Claim	Claim Language
’670	3	“3. The UE of claim 1 wherein the transceiver and the processor are configured to receive control information and physical downlink shared channel (PDSCH) transmissions with the first portion of the cell bandwidth and not in other portions of the cell bandwidth.”

To the extent Intellectual Ventures contends that an anticipatory reference in Exhibits K1-K6 fails to disclose these claims and/or claim elements, such reference can be combined with the corresponding disclosures from any one or more of the PDSCH References to render it obvious under 35 U.S.C. § 103(a), at least based on Intellectual Ventures’ Infringement Contentions, apparent claim constructions, and application of the claims to the Accused Instrumentalities, as best as they can be deciphered.

One of ordinary skill in the art would have been motivated to combine any one or more of the references provided in Exhibits K1-K6 with any one or more of the above exemplary PDSCH References to improve the function and utility of the same, and such a combination would have been within that person’s skill. For example, each of the PDSCH References describe techniques for receiving downlink shared channel transmissions:

- Wallen, [0047] (“FIG. 2 illustrates a network node 201 that is operated in accordance with some aspects of the invention so as to provide a cell 203 that is both a host cell and an Mcell. To support a standard-compatible (legacy) UE 205, the node 201 allocates some of its radiofrequency resources for use as, for example, a PDCCH and PDSCH as are known according to the communication system standard. In order to allow a reduced bandwidth communication device (e.g., an MTC device) 207 to also connect to and utilize the communication system, the node 201 also allocates other parts of its radiofrequency resources for use as, for example, an M-PDCCH and MPDSCH. As mentioned earlier, these channels substantially correspond to their legacy system counterparts (although they may differ in some aspects, as also mentioned above) but are sized and timed to permit the reduced bandwidth communication device to connect to and utilize the communication system.”)Dahlman,

123 ("The physical-channel types defined in LTE include the following: • The Physical Downlink Shared Channel (PDSCH) is the main physical channel used for unicast data transmission, but also for transmission of paging information.")

- Tripathi, 6 ("The UE, once powered-up and after performing memory and peripheral hardware tests, initiates downlink synchronization and a physical cell identity acquisition procedure. The UE attempts to acquire the central 1.4MHz bandwidth in order to decode the Primary sync signal (PSCH), Secondary sync signal (SSCH), and the system information block (SIB). The eNodeB transmits this information on the subcarriers within the 1.4MHz bandwidth consisting of 72 subcarriers, or 6 radio blocks.")R1-113659, 4 ("In Section 2, two different ways forward of bandwidth reduction are shown. For the way forward 1, considering the RF tuning delay, the scheduling scheme needs to be considered. The straightforward way is to restrict the PDCCH/PHICH/PCFICH and the PDSCH transmission in the same narrowband (maybe 1.4MHz). As a result, the RF does not need to tune the receiving frequency, and the narrowband DCI may also be optimized. However, the benefits of frequency selectivity may be lost. If the frequency locations of these channels are flexible, one subframe delay could be inserted between the narrowband PDCCH and the corresponding PDSCH in order to avoid the RF tuning delay. In this case, the downlink HARQ feedback procedure would need to be modified for low cost UEs, and the scheduling algorithm will also need to be updated, which has to support both normal UE and low cost UEs.")

And each of the remaining references provided in Exhibits K1-K6 seek ways of improving downlink shared channel transmission utilization:

- Berggren, [0074] ("The information contained in the MIB makes it possible to receive the channels that occupy the whole component carrier bandwidth, e.g., the control information in the PDCCH (Physical Downlink Control Channel) associated with the PDSCH (Physical Downlink Shared Channel), which contains the scheduled data transmissions.")

- R1-114188, 1 ("Here's a scenario where an MTC UE with Rx/Tx bandwidth of 1.4 MHz and accesses to an eNodeB. The MTC UE can access to the eNodeB if the eNodeB has at least one pair of 1.4MHz-wide DL/UL carriers. The MTC UE cannot access to an eNodeB having no 1.4MHz carriers because any PDCCH from the eNodeB spans over wider band than the MTC UE's Rx bandwidth.")

Combining the prior art identified in Exhibits K1-K6 with any one of the above exemplary PDSCH References would have amounted to applying a known technique to a known device ready for improvement to yield predictable results. Furthermore, the prior art and exemplary PDSCH References are in the same field of endeavor (*e.g.*, methods and systems for communicating using

a subordinate carrier of a host carrier) and given the design needs (*e.g.*, reducing transceiver complexity on LTE networks), combined with a finite number of identified, predictable solutions (*e.g.*, expanding beyond existing LTE communication methods), a POSITA would have been motivated to combine the teachings of these references.

Alternatively, each of the references provided in Exhibits K1-K6 alone renders this element obvious, in view of the knowledge and skill of a POSITA. That is, it would have been obvious in the view of one of ordinary skill in the art to add the above limitations to any one or more of the references provided in Exhibits K1-K6. A POSITA would have been motivated to incorporate techniques for receiving PDSCH transmissions, and such a combination would have been within that person's skill. As demonstrated in the exemplary PDSCH References listed above, methods for configuring UEs to receive PDSCH transmissions were well-known in the art by the time of the Asserted Patent's claimed invention and thus, adding it to any one or more of the references provided in Exhibits K1-K6 would have amounted to applying a known technique to a known device ready for improvement to yield predictable results.

K. The '889 Patent

NAME	DESCRIPTION:				
	The Control Message References	The Power Control Information References	The Second Time Slot References	The Code Sequence References	The Synchronization References
Dateki	✓	✓	✓	✓	✓
Cheng	✓				
Chen		✓	✓	✓	
Moon				✓	✓
Shin		✓			
Chitrapu					✓

1. The Control Message References

The Control Message References are: Dateki and Cheng. The relevant claims and/or claim elements of the Control Message References are identified below:

Patent	Claim	Claim Language
’889	1[b]	“the receiver and the processor are configured to receive a control message over a physical control channel in a first time slot,”

To the extent Intellectual Ventures contends that an anticipatory reference in Exhibits L1-L8 fails to disclose these claims and/or claim elements, such reference can be combined with the corresponding disclosures from any one or more of the Control Message References to render it obvious under 35 U.S.C. § 103(a), at least based on Intellectual Ventures’ Infringement Contentions, apparent claim constructions, and application of the claims to the Accused Instrumentalities, as best as they can be deciphered.

One of ordinary skill in the art would have been motivated to combine any one or more of the references provided in Exhibits L1-L8 with any one or more of the above exemplary Control Message References to improve the function and utility of the same, and such a combination would have been within that person’s skill. For example, each of the Control Message References describe techniques for receiving control messages over physical channels:

- Dateki, 8:63-9:22 (“The frame generating unit 11 generates a frame including the TCH modulation information and transmission power control information from the TPCC generating unit 26, and inputs the generated frame to the diffusion unit 8 as a control channel CCH. At the diffusion unit 8, a diffusion process is conducted using a diffusion code assigned to the control channel CCH, and the diffused signal is input to the multiplying unit 5. The frame generating unit 12 generates a frame including the DCH data and the transmission power control information from the TPCC generating unit 26, and inputs the generated frame to the diffusion unit 9 as a dedicated channel DCH. At the diffusion unit 9, a diffusion process is conducted using a diffusion code assigned to the dedicated channel, and the diffused signal is input to the multiplying unit 6. As can be appreciated from the above descriptions, in the present embodiment, the TCH data, the TCH modulation information, and the DCH data are diffused by differing diffusion codes. Also, the multiplying units 4, 5, and 6 multiply their inputs by gains G0, G1, and G2, respectively, to set the transmission power ratios of the respective channels, and at the multiplexing unit 3, multiplexing is realized by conducting adding processes on chips. The multiplexed signal is then input to the high frequency processing unit 2 at which modulation and amplification processes are conducted, and the resulting signal is transmitted via the antenna 1. It is noted that in this example, the diffusion codes used in the diffusion units 7, 8, and 9 are arranged to differ from each other.”)

- Cheng, [0004] ("The shared channel according to the present invention permits the use of a single channel to provide n users with the information normally provided over n dedicated channels, where n is an integer greater than 1. Accordingly, the present inventionpermits replacing those n dedicated channels with a single channel such that a significant reduction in the use of channelization codes is achieved.")

And each of the remaining references provided in Exhibits L1-L8 seek ways of improving control message allocation:

- Chen, [0048] ("Each F-CPCCH carries one forward power control subchannel for each wireless device assigned to that F-CPCCH. Each forward power control subchannel carries RL PC bits for the assigned wireless device at one of multiple possible rates (e.g., 800, 400, and 200 bps). Each F-CPCCH carries RL PC bits for its assigned wireless devices using a fixed frame size (e.g., 10 msec). For each frame, each F-CPCCH carries the RL PC bits for all assigned wireless devices in a TDM manner and at pseudo-random positions determined based on the common long code mask, as described below.")

- Moon, [0052] ("Here, the mobile station sends only the preamble signal (or pilot signal) until the base station sends a message transmission command or for a predetermined time, so as to control the transmission power between the base station and the mobile station. The base station sends a power control command via the forward common power control channel in response to the signal from the mobile station. Upon reception of the message transmission command from the base station or after a lapse of the predetermined time, the mobile station sends to the base station an intended message via the designated channel for the reverse link. Even at this time, the base station continues to send the power control command so as to continuously control the power while the mobile station sends the message.")

- Shin, 2:30-38 ("FIG. 1 shows a wireless communication system 100 including at least one WTRU 105 and at least one serving eNodeB 110. The WTRU 105 includes a receiver 115, a transmitter 120, a processor 125 and at least one antenna 130. The serving eNode-B 110 includes a transmitter 135, a receiver 140, a processor 145, a mapping table 150 and at least one antenna 155. The WTRU 105 and the eNodeB 110 communicate via a downlink (DL) control channel 160, a UL shared data channel 165 and a UL control channel 170.")

- 36.212 v8.0.0, 7 ("Table 4.2-1 specifies the mapping of the downlink transport channels to their corresponding physical channels. Table 4.2-2 specifies the mapping of the downlink control channel information to its corresponding physical channel.")36.213 v8.0.0, 8 ("Uplink power control consists of open and closed loop components and controls energy per resource element applied for a UE transmission. For intra-cell uplink power control the closed loop component adjusts a set point determined by the open loop power control component. Upon reception of an a-periodic transmit power command in an uplink scheduling grant the UE shall adjust its transmit EPRE accordingly.")Chitrapu, 7 ("The RNC is responsible for the flow of data and control

> messages (e.g. voice call, packet data, short message service, call control, etc.) between the CN and the user (i.e. the UE) over the radio interface (also called the air interface). To achieve the flow between the CN and the UE, the RNC controls the decisions associated with allocating radio interface resources to users (such as Radio Resource allocation and Handover decisions). The RNC also controls communication between the RNS and the UE such as broadcast, paging, and resource allocation messages.")

Combining the prior art identified in Exhibits L1-L8 with any one of the above exemplary Control Message References would have amounted to applying a known technique to a known device ready for improvement to yield predictable results. Furthermore, the prior art and exemplary Control Message References are in the same field of endeavor (*e.g.*, methods and systems for ensuring channel reciprocity in wireless systems) and given the design needs (*e.g.*, improving bandwidth sharing techniques in restricted systems), combined with a finite number of identified, predictable solutions (*e.g.*, expanding beyond existing bandwidth sharing methods), a POSITA would have been motivated to combine the teachings of these references.

Alternatively, each of the references provided in Exhibits L1-L8 alone renders this element obvious, in view of the knowledge and skill of a POSITA. That is, it would have been obvious in the view of one of ordinary skill in the art to add the above limitations to any one or more of the references provided in Exhibits L1-L8. A POSITA would have been motivated to incorporate techniques for receiving control messages over physical channels, and such a combination would have been within that person's skill. As demonstrated in the exemplary Control Message References listed above, methods for routing and messages, including control messages, over physical channels were well-known in the art by the time of the Asserted Patent's claimed invention and thus, adding it to any one or more of the references provided in Exhibits L1-L8 would have amounted to applying a known technique to a known device ready for improvement to yield predictable results.

2. The Power Control Information References

The Power Control Information References are: Dateki, Chen, and Shin. The relevant claims and/or claim elements of the Power Control Information References are identified below:

Patent	Claim	Claim Language
’889	1[e]	“the processor is further configured to extract power control information for the first UE from the control message, and”

To the extent Intellectual Ventures contends that an anticipatory reference in Exhibits L1-L8 fails to disclose these claims and/or claim elements, such reference can be combined with the corresponding disclosures from any one or more of the Power Control Information References to render it obvious under 35 U.S.C. § 103(a), at least based on Intellectual Ventures’ Infringement Contentions, apparent claim constructions, and application of the claims to the Accused Instrumentalities, as best as they can be deciphered.

One of ordinary skill in the art would have been motivated to combine any one or more of the references provided in Exhibits L1-L8 with any one or more of the above exemplary Power Control Information References to improve the function and utility of the same, and such a combination would have been within that person’s skill. For example, each of the Power Control Information References describe techniques for extract power control information:

- Dateki, 10:43-59 (“The CCH inverse diffusion unit 33 conducts an inverse diffusion process on the CCH information that is transmitted from the transmission side, and inputs the inverse-diffused information to the bit determination unit 36. The TCH inverse diffusion unit 34 conducts an inverse diffusion process on the TCH modulation information that is transmitted from the transmission side, and inputs the inverse-diffused information to the bit determination unit 36. In turn, the bit determination unit outputs downlink traffic data. Also, inverse diffusion outputs including transmission power control information that are obtained by inverse diffusion processes conducted by the TCH inverse diffusion unit 34 and the DCH inverse diffusion unit 35, respectively, are input to the TPCC extracting unit 37 at which the transmission power control information is extracted. The extracted transmission power information is then input to the transmission power control unit 38.”)Chen, [0107] (“FIG. 8 shows a block diagram of a base station 110 providing multicast service and a wireless device 120 receiving the multicast service. For the forward link, at base station 110, an FL transmit

(TX) data processor 810 receives various types of data (e.g., multicast data, signaling, and RL PC bits), processes (e.g., encodes, interleaves, modulates, channelizes, and scrambles) the received data for transmission on forward link channels (e.g., the F-FCH, F-DCCH, and F-CPCCH), and provides a stream of data chips. A transmitter unit (TMTR) 812 conditions (e.g., converts to analog, amplifies, filters, and frequency upconverts) the data chips to generate a forward link signal. The forward link signal is routed through a duplexer (D) 814 and transmitted via an antenna 816. At wireless device 120, the forward link signal is received by an antenna 852, routed through a duplexer 854, and provided to a receiver unit (RCVR) 856. Receiver unit 856 conditions (e.g., filters, amplifies, frequency downconverts, and digitizes) the received signal to obtain data samples. An FL receive (RX) data processor 860 processes (e.g., dechannelizes, data demodulates, descrambles, deinterleaves, and decodes) the data samples to obtain decoded data for wireless device 120. The decoded data includes the multicast data sent on the F-FCH and the user-specific signaling sent on the F-DCCH for wireless device 120.")Shin, 3:8-30 ("The WTRU 105 transmit power, PTx, for the UL shared data channel 165 is determined in an initial transmission phase based on a DL reference signal 175 transmitted by the transmitter 135 of the eNodeB 110. The DL reference signal 175 has a known transmit power that the WTRU 105 uses for pathloss measurement. For intra-cell TPC, the WTRU 105 initial transmit power, PTx, is defined based on open loop TPC as follows: P Tx=max(min(SINRT +PL+IN 0 +K,P max),P min). Equation (1A) where SINRT is the target signal-to-interference noise ratio (SINR) in dB at the serving eNodeB 110, and PL is the pathloss, (i.e., a set point parameter), in dB, including shadowing, from the serving eNodeB 110 to the WTRU 105. The WTRU 105 measures the pathloss based on the DL reference signal 175, whose transmit power is known at the WTRU 105 via DL signaling. The value IN0 is the UL interference and noise power in dBm at the serving eNodeB 110. K is a power control margin used for the serving eNodeB 110, taking into account the fact that, in practice, the power of the DL reference signal 175 may be offset from the actual transmit power. Pmax and Pmin are the maximum and minimum transmit power levels in dBm, respectively, for transmissions made by the WTRU 105 over the UL shared data channel 165.")

And each of the remaining references provided in Exhibits L1-L8 seek ways of improving power control:

- Cheng, [0011] ("The dynamic shared forward link channel, which is a shared forward link data channel (or simply, a 'data' channel), is used to send multicast data to a group of wireless devices. The multicast data may be sent, e.g., using a scrambling/long code generated based on a common long code mask for the data channel. To facilitate power control of the data channel, reference power control (PC) bits of a known value may be sent on the data channel and used for signal quality estimation by the wireless devices.")

- Moon, [0048] ("In a second preferred method, the base station informs the mobile station by transmitting a message signal the time at which the mobile station can transmit the message signal via the reverse link common channel. For initial power

control, the base station sends a power control command via the forward common power control channel by measuring an intensity of the preamble signal received from the mobile station. Upon reception of the power control command, the mobile station then controls the transmission power according to the received power control command. That is, upon acquisition of the preamble signal transmitted from the mobile station, the base station measures the signal intensity for the preamble duration and determines whether the measured intensity is appropriate. The base station sends the power control command by generating a power control bit (or power control command) according to the measurement. The mobile station then controls the transmission power of the preamble signal according to the received power control command and sends the power controlled preamble signal to the base station.")

- 36.212 v8.0.0, 8 ("Data and control streams from/to MAC layer are encoded /decoded to offer transport and control services over the radio transmission link. Channel coding scheme is a combination of error detection, error correcting, rate matching, interleaving and transport channel or control information mapping onto/splitting from physical channels.")36.213 v8.0.0, 8 ("Uplink power control consists of open and closed loop components and controls energy per resource element applied for a UE transmission. For intra-cell uplink power control the closed loop component adjusts a set point determined by the open loop power control component. Upon reception of an a-periodic transmit power command in an uplink scheduling grant the UE shall adjust its transmit EPRE accordingly.")Chitrapu, 114 ("Power Control is used to adjust the transmit power of both UE and Node B in order to achieve a desired Quality of Service with minimum transmit power, thus limiting the interference level within the system. Power Control is useful for both Downlink and Uplink, although the reasons are different. In the Uplink direction, Power Control is useful – and necessary – to counter the near–far problem and to conserve the battery power consumption.")

Combining the prior art identified in Exhibits L1-L8 with any one of the above exemplary Power Control Information References would have amounted to applying a known technique to a known device ready for improvement to yield predictable results. Furthermore, the prior art and exemplary Power Control Information References are in the same field of endeavor (*e.g.*, methods and systems for ensuring channel reciprocity in wireless systems) and given the design needs (*e.g.*, improving bandwidth sharing techniques in restricted systems), combined with a finite number of identified, predictable solutions (*e.g.*, expanding beyond existing bandwidth sharing methods), a POSITA would have been motivated to combine the teachings of these references.

Alternatively, each of the references provided in Exhibits L1-L8 alone renders this element obvious, in view of the knowledge and skill of a POSITA. That is, it would have been obvious in

the view of one of ordinary skill in the art to add the above limitations to any one or more of the references provided in Exhibits L1-L8. A POSITA would have been motivated to incorporate techniques for extracting power control information from control messages, and such a combination would have been within that person's skill. As demonstrated in the exemplary Power Control Information References listed above, methods of power control information extraction were well-known in the art by the time of the Asserted Patent's claimed invention and thus, adding it to any one or more of the references provided in Exhibits L1-L8 would have amounted to applying a known technique to a known device ready for improvement to yield predictable results.

3. The Second Time Slot References

The Second Time Slot References are: Dateki and Chen. The relevant claims and/or claim elements of the Second Time Slot References are identified below:

Patent	Claim	Claim Language
'889	1[f]	"the transmitter and the processor are configured to transmit a signal over a physical control channel to a base station in a second time slot at a transmission power level based on the extracted power control information."

To the extent Intellectual Ventures contends that an anticipatory reference in Exhibits L1-L8 fails to disclose these claims and/or claim elements, such reference can be combined with the corresponding disclosures from any one or more of the Second Time Slot References to render it obvious under 35 U.S.C. § 103(a), at least based on Intellectual Ventures' Infringement Contentions, apparent claim constructions, and application of the claims to the Accused Instrumentalities, as best as they can be deciphered.

One of ordinary skill in the art would have been motivated to combine any one or more of the references provided in Exhibits L1-L8 with any one or more of the above exemplary Second Time Slot References to improve the function and utility of the same, and such a combination

would have been within that person's skill. For example, each of the Second Time Slot References describe techniques for varying transmission power level:

- Dateki, 10:60-11:18 ("Also, according to the present embodiment, uplink traffic data, a pilot symbol, and a ACK/NACK signal based on the reception processing result of processing downlink traffic data output are input to the diffusion units 45, 46, and 47, respectively, to be diffused by differing diffusion codes. Then the diffused signals are multiplexed at the multiplexing unit 44, and multiplied at the multiplying unit 43 by a control value from the transmission power control unit 38 to realize transmission power control. Then, processes such as coding, modulation and amplification are conducted by the high frequency processing unit 42, after which the processed signal is transmitted via the antenna 41. According to an embodiment, the transmission power control unit 38 is configured to increment the transmission power Ptx by +1 dB when the transmission power control information TPCC extracted by the TPCC extracting unit 37 is greater than 0 (TPCC>0), and the transmission power control unit 38 is configured to decrement the transmission power Ptx by -1 dB when the transmission power control information is TPCC is less than 0 (TPCC<0). In this way, the transmission power control unit 38 is arranged to input a value to the multiplying unit 43 according to the updated transmission power Ptx. It is noted that the transmission power control information TPCC may be arranged to use plural bits so that transmission power control may be conducted in plural stages (i.e., so that transmission power may be increased or decreased in plural stages).")

- Chen, [0113] ("FIG. 12 shows a block diagram of a data processor 890 a for the R-PICH and RFCH for user x. Data processor 890 a is part of RL TX data processor 890 in FIG. 8. Within a data processor 1202 for the R-PICH, a multiplexer 1210 receives pilot data and FL PC bits for the primary and secondary reverse power control subchannels. Multiplexer 1210 multiplexes the pilot data and the FL PC bits on the R-PICH, as shown in FIGS. 4 and 5. A Walsh cover unit 1212 covers the output of multiplexer 1210 with a Walsh function Wr-pich for the R-PICH. Within a data processor 1204 for the R-FCH, reverse link data and signaling are processed by an encoder/interleaver 1220, covered with a Walsh function Wr-fch for the R-FCH by a Walsh cover unit 1222, and scaled with a gain for user x by a channel gain unit 1224. A long code generator 1230 generates the long code for user x based on the unique long code mask for user x. A PN generator 1232 generates PNI and PNQ sequences based on the long code for user x and the common IPN and QPN sequences used for all wireless devices. A complex multiplexer 1242 multiples the outputs of data processors 1202 and 1204 with the PNI and PNQ sequences and generates a stream of Iout and Qout data chips, which is further processed by transmitter unit 892. The transmission on the R-PICH and/or the R-FCH may be gated (e.g., to ½ or ¼) or disabled.")

And each of the remaining references provided in Exhibits L1-L8 seek ways of improving power level transmission:

- Cheng, [0002] ("As shown in FIG. 1, the downlink DPCH includes portions of a dedicated physical control channel (DPCCH) and a dedicated physical data channel (DPDCH). Specifically, the downlink DPCH for a user includes the downlink transmit power control (TPC) information, the transport format combination indicator (TFCI) information, and the pilot field of the DPCCH. With respect to the DPDCH, the downlink DPCH includes the voice data and higher layer signaling data. However, as will be appreciated, if a mobile user is only involved in data communication, and no voice communication, then the DPDCH fields in the downlink DPCH are mostly empty except for the higher layer signaling data called the dedicated transport channel (DCCH).")

- Moon, [0018] ("It is still another object of the present invention to provide a device and method for designating a reverse link common channel to a mobile station and enabling the mobile station to control a transmission power of the designated reverse link common channel according to a power control bit received via a forward common power control channel in a CDMA communication system.")Shin, 7:55-8:8 (""FIG. 2 shows a flow diagram of a TPC procedure 200 that may be implemented by the system 100 of FIG. 1. In step 205, an initial UL transmission phase is implemented. The WTRU 105 performs a pathloss-based open loop intra-cell TPC procedure to set the transmit power for the initial UL transmission phase (e.g., similar to a RACH procedure), based on system parameters provided by the serving eNodeB 110, such as SINR, IN0, K and the transmit power of the DL reference signal 175 (step 210). In step 215, a normal UL transmission phase is implemented. The WTRU 105 performs a pathloss-based open loop intra-cell TPC procedure based on system parameters provided by the serving eNodeB 110, and performs a closed loop (CQI-based) intracell TPC procedure based on UL CQI (UL grant information) provided by the serving eNodeB 110 (step 220). Optionally, the WTRU performs an IoT-based intercell TPC procedure based on load indicators (IoT) received from all neighboring cells (eNodeBs) (step 225). In step 230, the WTRU 105 sets the transmit power of at least one UL channel, (e.g., the UL shared data channel 165, the UL control channel 170), based on values generated by performing step 220, (and optionally step 225).")36.212 v8.0.0, 25 ("A DL-CCH transports downlink or uplink scheduling information, or uplink power control commands for one MAC ID. The MAC ID is implicitly encoded in the CRC. Figure 5.3.3-1 shows the processing structure for the DL-CCH.")36.213 v8.0.0, 8 ("Uplink power control consists of open and closed loop components and controls energy per resource element applied for a UE transmission. For intra-cell uplink power control the closed loop component adjusts a set point determined by the open loop power control component. Upon reception of an a-periodic transmit power command in an uplink scheduling grant the UE shall adjust its transmit EPRE accordingly.")

- Chitrapu, 177 ("The allocation of timeslots should take into account the timeslots used by the adjacent cells (to minimize inter-cell interference), should provide sufficient capacity (to support the expected amount of traffic), and allocate timeslot power levels, etc. The allocation may be optimized by the Slow DCA algorithm.")

Combining the prior art identified in Exhibits L1-L8 with any one of the above exemplary Second Time Slot References would have amounted to applying a known technique to a known device ready for improvement to yield predictable results. Furthermore, the prior art and exemplary Second Time Slot References are in the same field of endeavor (*e.g.*, methods and systems for ensuring channel reciprocity in wireless systems) and given the design needs (*e.g.*, improving bandwidth sharing techniques in restricted systems), combined with a finite number of identified, predictable solutions (*e.g.*, expanding beyond existing bandwidth sharing methods), a POSITA would have been motivated to combine the teachings of these references.

Alternatively, each of the references provided in Exhibits L1-L8 alone renders this element obvious, in view of the knowledge and skill of a POSITA. That is, it would have been obvious in the view of one of ordinary skill in the art to add the above limitations to any one or more of the references provided in Exhibits L1-L8. A POSITA would have been motivated to incorporate techniques for transmitting signals over physical control channels based on extracted control information, and such a combination would have been within that person's skill. As demonstrated in the exemplary Second Time Slot References listed above, methods for adjusting transmission power level based on extracted control information were well-known in the art by the time of the Asserted Patent's claimed invention and thus, adding it to any one or more of the references provided in Exhibits L1-L8 would have amounted to applying a known technique to a known device ready for improvement to yield predictable results.

4. The Code Sequence References

The Code Sequence References are: Dateki, Chen, and Moon. The relevant claims and/or claim elements of the Code Sequence References are identified below:

Patent	Claim	Claim Language
’889	2	“2. The first UE of claim 1 wherein the signal transmitted over the physical control channel is produced using a code sequence, wherein a plurality of UEs transmit in the second time slot using different code sequences.”

To the extent Intellectual Ventures contends that an anticipatory reference in Exhibits L1-L8 fails to disclose these claims and/or claim elements, such reference can be combined with the corresponding disclosures from any one or more of the Code Sequence References to render it obvious under 35 U.S.C. § 103(a), at least based on Intellectual Ventures’ Infringement Contentions, apparent claim constructions, and application of the claims to the Accused Instrumentalities, as best as they can be deciphered.

One of ordinary skill in the art would have been motivated to combine any one or more of the references provided in Exhibits L1-L8 with any one or more of the above exemplary Code Sequence References to improve the function and utility of the same, and such a combination would have been within that person’s skill. For example, each of the Code Sequence References describe techniques for using code sequences in signal transmission:

- Dateki, 10:60-11:18 (“Also, according to the present embodiment, uplink traffic data, a pilot symbol, and a ACK/NACK signal based on the reception processing result of processing downlink traffic data output are input to the diffusion units 45, 46, and 47, respectively, to be diffused by differing diffusion codes. Then the diffused signals are multiplexed at the multiplexing unit 44, and multiplied at the multiplying unit 43 by a control value from the transmission power control unit 38 to realize transmission power control. Then, processes such as coding, modulation and amplification are conducted by the high frequency processing unit 42, after which the processed signal is transmitted via the antenna 41. According to an embodiment, the transmission power control unit 38 is configured to increment the transmission power Ptx by +1 dB when the transmission power control information TPCC extracted by the TPCC extracting unit 37 is greater than 0 (TPCC>0), and the transmission power control unit 38 is configured to decrement the transmission power Ptx by -1 dB when the transmission power control information is TPCC is less than 0 (TPCC<0). In this way, the transmission power control unit 38 is arranged to input a value to the multiplying unit 43 according to the updated transmission power Ptx. It is noted that the transmission power control information TPCC may be arranged to use plural bits so that transmission

power control may be conducted in plural stages (i.e., so that transmission power may be increased or decreased in plural stages).")

- Moon, [0053] ("Here, the designated common channel refers to a specific channel which can be exclusively used by a specific user, among the common channels which can be used in common by all the users. For designation of the common channels, several codes are separately provided in addition to the codes for the common channels, and one of the codes is assigned to a particular user for a while. Alternatively, for designation of the common channels, one of the common channels is assigned to the particular user who requires a designated channel, and therefore the other users cannot use this channel while it is being used by the particular user. In designating the reverse link common channels, it is possible to designate which long codes will be used as spreading codes. The long codes may be the existing public long codes, the long codes for the access channels, the long codes for the common control channels, or the separate long codes for channel designation.")

- Chen, [0042] ("The F-FCH is also associated with a common long code mask (LCM) used to generate a long code for scrambling the multicast data. The wireless devices are aware of the common long code mask for the F-FCH and can perform the complementary descrambling to recover the multicast data.")

And each of the remaining references provided in Exhibits L1-L8 seek ways of improving signal transmission:

- Cheng, [0003] ("As discussed above, the downlink DPCH is a dedicated channel for the mobile user. Accordingly, each user involved in Voice and/or data communication has a corresponding downlink DPCH assigned, and each assigned DPCH requires the use of a channelization code for trans mission. However, the base station only has a limited number of channelization codes to devote to establishing downlink DPCHs. Consequently, as the demand for data services increases, and more users of the system conduct strictly data communication, an insufficient number of channelization codes will be available to handle the data communication.")

- Shin, 1:28-49 ("Open loop TPC is based on pathloss measurement and system parameters where the pathloss measurement is per formed at a wireless transmit/receive unit (WTRU) and the system parameters are provided by an evolved Node-B (eNodeB). Closed loop TPC is typically based on TPC feedback information, (Such as a TPC command), that is periodically sent from the eNodeB where the feedback information is generally derived using signal-to-interference noise ratio (SINR) measured at the eNodeB. Open loop TPC can compensate for long-term channel variations, (e.g. pathloss and shadowing), in an effective way, for instance, without the history of the transmit power. How ever, open loop TPC typically results in pathloss measurement errors and transmit power setting errors. On the other hand, slow closed loop or CQI-based TPC is less sensitive to errors in measurement and transmit power setting, because it is based on feedback signaled from the eNodeB. However, slow closed loop or CQI-based TPC degrades performance when there is no available feedback due to

UL transmission pause, or pauses in the feedback transmission or channel variations are severely dynamic.")

- 36.212 v8.0.0, 8 ("Data and control streams from/to MAC layer are encoded /decoded to offer transport and control services over the radio transmission link. Channel coding scheme is a combination of error detection, error correcting, rate matching, interleaving and transport channel or control information mapping onto/splitting from physical channels.")

- 36.213 v8.0.0, 9 ("The setting of the UE Transmit power Ppucch for the physical uplink control channel (PUCCH) transmissions is defined by [formula omitted] … where …△j is a UE specific correction value, also referred to as a TPC command, included in a DL scheduling assignment or sent jointly coded with other UE specific correction values on a TPC PDCCH.")

- Chitrapu, 97 ("Random Access procedure is the means by which a UE in the Idle Mode or CELL FACH/CELL PCH/URA PCH states of the Connected Mode can request access for Network Services.")

Combining the prior art identified in Exhibits L1-L8 with any one of the above exemplary Code Sequence References would have amounted to applying a known technique to a known device ready for improvement to yield predictable results. Furthermore, the prior art and exemplary Code Sequence References are in the same field of endeavor (*e.g.*, methods and systems for ensuring channel reciprocity in wireless systems) and given the design needs (*e.g.*, improving bandwidth sharing techniques in restricted systems), combined with a finite number of identified, predictable solutions (*e.g.*, expanding beyond existing bandwidth sharing methods), a POSITA would have been motivated to combine the teachings of these references.

Alternatively, each of the references provided in Exhibits L1-L8 alone renders this element obvious, in view of the knowledge and skill of a POSITA. That is, it would have been obvious in the view of one of ordinary skill in the art to add the above limitations to any one or more of the references provided in Exhibits L1-L8. A POSITA would have been motivated to incorporate techniques for using multiple code sequences to produce transmitted signals, and such a combination would have been within that person's skill. As demonstrated in the exemplary Code

Sequence References listed above, methods for producing signals based on one or more code sequences were well-known in the art by the time of the Asserted Patent's claimed invention and thus, adding it to any one or more of the references provided in Exhibits L1-L8 would have amounted to applying a known technique to a known device ready for improvement to yield predictable results.

5. The Synchronization References

The Synchronization References are: Dateki,Moon, and Chitrapu. The relevant claims and/or claim elements of the Synchronization References are identified below:

Patent	Claim	Claim Language
'889	4	"4. The first UE of claim 1 wherein the transmitter and the processor are further configured to transmit the signal over the physical control channel when time synchronized and to transmit a signal over a random access channel when not time synchronized."

To the extent Intellectual Ventures contends that an anticipatory reference in Exhibits L1-L8 fails to disclose these claims and/or claim elements, such reference can be combined with the corresponding disclosures from any one or more of the Synchronization References to render it obvious under 35 U.S.C. § 103(a), at least based on Intellectual Ventures' Infringement Contentions, apparent claim constructions, and application of the claims to the Accused Instrumentalities, as best as they can be deciphered.

One of ordinary skill in the art would have been motivated to combine any one or more of the references provided in Exhibits L1-L8 with any one or more of the above exemplary Synchronization References to improve the function and utility of the same, and such a combination would have been within that person's skill. For example, each of the Synchronization References describe techniques for synchronizing signal transmission:

- Dateki, 10:25-33 ("The antenna 31 receives a signal transmitted from the antenna 1 of FIG. 3, for example, and inputs the received signal to the high frequency processing

unit 32. The high frequency processing unit 32 includes a low noise amplifier, a demodulator and a decoder, for example. The antenna 41 is configured to transmit a signal from the high frequency processing unit 42 to the antenna 21 of FIG. 3, for example. The high frequency processing unit 42 includes an encoder, a modulator, and a transmission power amplifier, for example.")

- Moon, [0046] ("Referring to FIG. 2, the mobile station (MS) transmits a preamble signal via a reverse link common channel, and the base station (BS) sends to the mobile station a power control command via a forward common power control channel. Here, the reverse link common channel operates in the slotted Aloha mode and a slot start position of a new message is predefined between the base station and the mobile station. The mobile station transmits an intended message signal at a specified time after sending the preamble signal for a predetermined amount of time. There are three preferred methods for determining the proper time at which the mobile station can transmit the message signal.")

- Chitrapu, 97 ("Random Access procedure is the means by which a UE in the Idle Mode or CELL FACH/CELL PCH/URA PCH states of the Connected Mode can request access for Network Services.")

And each of the remaining references provided in Exhibits L1-L8 seek ways of improving signal transmission:

- Cheng, [0003] ("As discussed above, the downlink DPCH is a dedicated channel for the mobile user. Accordingly, each user involved in Voice and/or data communication has a corresponding downlink DPCH assigned, and each assigned DPCH requires the use of a channelization code for trans mission. However, the base station only has a limited number of channelization codes to devote to establishing downlink DPCHs. Consequently, as the demand for data services increases, and more users of the system conduct strictly data communication, an insufficient number of channelization codes will be available to handle the data communication.")

- Chen, [0056] ("FIG. 4 shows the reverse link channels for each wireless device receiving the multicast service. The reverse link channels include a Reverse Fundamental Channel (R-FCH) and a Reverse Pilot Channel (R-PICH). An R-DCCH may also be used in place of, or in addition to, the R-FCH. The wireless device uses the RFCH and/or R-DCCH to send data and signaling to the system. The transmission characteristics may differ for the R-FCH and R-DCCH. For example, the R-FCH may be transmitted in each frame but at a variable rate, whereas the R-DCCH may or may not be transmitted in any given frame but may be sent at a fixed (e.g., full) rate if transmitted. For simplicity, the following description is the R-FCH, although much of the description may also apply to the R-DCCH. The wireless device uses the R-PICH to send a pilot on the reverse link and to send FL PC bits used to adjust the transmit powers of the forward link channels.")

- Shin, 4:35-42 ("It is assumed that each cell broadcasts a UL interference load bit periodically, (similar to the relative grant in high speed uplink packet access (HSUPA)), so that the WTRU 105 can decode the indicator bit from the selected strongest neighboring cell. The WTRU 105 may make a decision on whether the WTRU 105 is at cell edge or at cell interior, based on a pathloss ratio between its serving cell and the strongest neighboring cell.")

- 36.212 v8.0.0, 19 ("5.2.1 Random access channel The sequence index for the random access channel is received from higher layers and is processed according to [2].")

- 36.213 v8.0.0, 7 ("4.2.4 Transmission timing adjustments On receiving a random access burst from a UE the network determines if the UE needs a TA adjustment and if so signals to the UE a TA command which is a multiple of 0.52 us and is applied asa1 step adjustment relative to the random access channel preamble transmit timing. A UE receives TA commands as determined by the network to maintain its time alignment. A TA command received by the UE will be a multiple of 0.52 us and is applied asa1 step adjustment relative to current uplink timing.")

Combining the prior art identified in Exhibits L1-L8 with any one of the above exemplary Synchronization References would have amounted to applying a known technique to a known device ready for improvement to yield predictable results. Furthermore, the prior art and exemplary Synchronization References are in the same field of endeavor (*e.g.*, methods and systems for ensuring channel reciprocity in wireless systems) and given the design needs (*e.g.*, improving bandwidth sharing techniques in restricted systems), combined with a finite number of identified, predictable solutions (*e.g.*, expanding beyond existing bandwidth sharing methods), a POSITA would have been motivated to combine the teachings of these references.

Alternatively, each of the references provided in Exhibits L1-L8 alone renders this element obvious, in view of the knowledge and skill of a POSITA. That is, it would have been obvious in the view of one of ordinary skill in the art to add the above limitations to any one or more of the references provided in Exhibits L1-L8. A POSITA would have been motivated to incorporate techniques for varying transmission criteria based on time synchronization, and such a combination would have been within that person's skill. As demonstrated in the exemplary Synchronization References listed above, methods for using time synchronization to transmit

signals over physical and/or random access channels were well-known in the art by the time of the Asserted Patent's claimed invention and thus, adding it to any one or more of the references provided in Exhibits L1-L8 would have amounted to applying a known technique to a known device ready for improvement to yield predictable results.

V. LIMITATIONS THAT ARE INDEFINITE OR LACK WRITTEN DESCRIPTION

The following contentions are subject to revision and amendment pursuant to Federal Rule of Civil Procedure 26(e), the Orders of record in this matter, further investigation and discovery regarding the defenses and prior art, the Court's construction of the Asserted Claims, or the review and analysis of expert witnesses.

Tesla offers these contentions in response to Intellectual Ventures' Infringement Contentions and without prejudice to position taken with respect to claim construction issues. To the extent the following contentions reflect constructions of claim limitations consistent with or implicit in Intellectual Ventures' Infringement Contentions, no inference is intended nor should any be drawn that Tesla agrees with any claim construction implied by those Contentions, and Tesla expressly reserves the right to contest such claim constructions. Tesla further incorporates by reference the terms identified in the parties' forthcoming claim construction briefing and Joint Claim Construction Statement.

A. Indefiniteness Under 35 U.S.C. § 112, ¶ 2 and 112(b)

Subject to the reservation of rights above, Tesla provides below an identification of Asserted Claims along with an identification of the specific limitations that are invalid pursuant to 35 U.S.C. § 112 ¶ 2 or 112(b) as indefinite. Specifically, at least the following terms are not explained in the specifications of the Asserted Patents such that a POSITA would be able to determine their meaning and scope with reasonable certainty:

1. The ’639 Patent

Claim(s)	Claim Language
1[c]	“generating said target feature information from said data statistics”
7	“said feature information is further used to distinguish two target classes or a plurality of target classes from one another”

2. The ’805 Patent

Claim(s)	Claim Language
1[e]	“analyzing the plurality of edge segments for the presence of a geometric object associated with a geometrical form that may at least partially describe a potential destination so as to identify one or more potential geometric objects”
1[f]	“analyzing the one or more potential geometric objects for plausibility using a matching algorithm so as to identify one or more plausible objects”

3. The ’395 Patent

Claim(s)	Claim Language
1	“said processing”

B. Enablement and Written Description under 35 U.S.C. § 112, ¶ 1 and 112(a)

The Asserted Patents are invalid under 35 U.S.C. § 112, ¶ 1 or 112(a) because they do not describe or enable the full scope of the asserted claims. In addition, to the extent that the accused features of the Accused Instrumentalities are deemed to fall within the scope of the asserted claims, the Asserted Patents do not describe or enable the accused features. Subject to the reservation of rights above, Tesla provides below an identification of Asserted Claims along with an identification of the specific limitations that are invalid pursuant to 35 U.S.C. § 112, ¶ 1 or 112(a) as lacking written description or enablement support. Specifically, the specifications of the Asserted Patents do not enable or describe the full scope of at least the following terms:

1. The ’639 Patent

Claim(s)	Claim Language

1[b]	"calculating data statistics from said data and using said data statistics to select target specific feature information to distinguish specific targets from background clutter"
1[c]	"generating said target feature information from said data statistics"
1[d]	"extracting said target specific feature information from said data"
7	"wherein said feature information is further used to distinguish two target classes or a plurality of target classes from one another"

For example, claim 1 of the '639 Patent recites "calculating data statistics from said data and using said data statistics to select target specific feature information to distinguish specific targets from background clutter." However, the '639 Patent specification does not disclose how to calculate "data statistics" or what kind of "data statistics" to calculate from the image data.

To the extent "target feature information" (from limitation 1[c]) and "feature information" (from claim 7) are different than "target specific feature information" (from limitation 1[b] and 1[d]) there is no disclosure or description of "target feature information" and "feature information." For example, the specification does not describe the differences between target specific feature information," "target feature information," and "feature information." Indeed, the '639 Patent specification never even uses the term "target feature information."

2. The '743 Patent

Claim(s)	Claim Language
10	"a third function group which provides reasoning and decision making capabilities for the resource managed system"
10	"a third function which generates automatic control signal requests corresponding to the actions dictated by the QoS requirements"

For example, independent claim 10 of the '743 Patent recites "a third function group which provides reasoning and decision making capabilities for the resource managed system[.]" However, the '743 Patent specification does not disclose and algorithm for such "reasoning and

decision making capabilities." For example, there is no description of how the system reasons, how decision making is conducted, or the reasoning and decision making capabilities impact the resource managed system.

In addition, independent claim 10 of the '743 Patent recites "a third function which generates automatic control signal requests corresponding to the actions dictated by the QoS requirements." However, the '743 Patent does not described or explain how to generate "automatic" control signals, what is meant by "automatic" control signals, or how they correspond to actions dicated by the QoS requirements. For at least these reasons, the specification does not enable or provide sufficient written description support for the asserted claims of the '743 Patent.

3. The '805 Patent

Claim(s)	Claim Language
1[c]	"calculating at least one trajectory describing an optimized travel path using the positional parameters so as to assist a subsequent vehicle guidance for at least one of the potential destinations"
1[d]	"performing an edge detection and edge segmentation on the image data so as to break down the image data into a plurality of edge segments and storing interrelationships of the plurality of edge segments in a mathematical tree structure"
1[e]	"analyzing the plurality of edge segments for the presence of a geometric object associated with a geometrical form that may at least partially describe a potential destination so as to identify one or more potential geometric objects"
1[g]	"performing an additional acceptance analysis so as to identify at least one accepted object, the additional acceptance analysis including analyzing a shape of the image formation of each object in the image data based on knowledge of at least one imaging property of the imaging sensor relative to the surrounding field"
11[b]	"selecting a new most proximate destination went the most proximate destination is no longer easily reachable"

For example, claim 1 of the '805 Patent recites "performing an edge detection and edge segmentation on the image data so as to break down the image data into a plurality of edge segments and storing interrelationships of the plurality of edge segments in a mathematical tree

structure." However, '805 Patent specification fails to explain how to perform "edge detection and edge segmentation on the image data." For example, the specification discloses that the "image-processing unit (11) includes an edge-detector and segmenter" ('805 Patent at 2:64–67), but it does not explain how this "edge-detector and segmenter" work, what specific function it performs, or what components it includes. The other instances in the specification discussing "edge detection" and "edge segmentation" provide no more detail or explanation than the claim language itself. *See, e.g.*, '805 Patent at 2:34–35, 3:36–37. Further, the specification does not provide any detail on how the "edge detection" and "edge segmentation" can be done in a way to allow for "break[ing] down the image data into a plurality of edge segments and storing interrelationships of the plurality of edge segments in a mathematical tree structure."

Further, dependent claim 11 of the '805 Patent recites "selecting a new most proximate destination went the most proximate destination is no longer easily reachable." However, the '805 Patent specification fails to explain when a destination is "easily reachable" and further fails to explain how to determine the ease (or difficultly) of reaching potential destinations.

4. The '180 Patent

Claim(s)	Claim Language
22[a]	"configuring a first optics component relative to a first image sensor to form a first channel having a first field of view (FOV) that comprises a first angular width of a scene"
22[b]	"configuring a second optics component relative to a second image sensor to form a second channel having a second FOV that comprises a second angular width of the scene, wherein the first and second angular widths are different"
22[d]	"combining data received during the frame from one or more of the first and second channels to provide an image"

For example, independent claim 1 of the '180 Patent recites "a first field of view (FOV) that comprises a first angular width of a scene" and "a second FOV that comprises a second angular width of the scene, wherein the first and second angular widths are different[.]" However, the

’180 Patent specification does not disclose “angular width.” For example, there is no description of what “angular width” is, how to measure it, or how it differs from “field of view.” Indeed, the ’180 Patent never even uses the term “angular width.”

In addition, independent claim 1 of the ’180 Patent recites “combining data received during the frame from one or more of the first and second channels to provide an image.” However, the ’180 Patent does not describe or explain how to combine data received from only one channel to provide an image. For at least these reasons, the specification does not enable or provide sufficient written description support for the asserted claims of the ’180 Patent.

5. The ’395 Patent

Claim(s)	Claim Language
1	“said cache line has also been accessed in response to said processor executing an instruction in a second group of instructions”
1	“causes said cache line to be accessed”
1	“wherein said third group of instructions is executed by an agent other than said processor”
1	“rolling back said first group of instructions provided said first bit is set and rolling back said second group of instructions provided said second bit is set before allowing an instruction in said third group to access said cache line”
2	“determining a state of said cache line, wherein said state is specified according to a cache coherency protocol comprising at least a modified state, a shared state, and an invalid state”
2	“rolling back said first group of instructions provided said first bit is set and rolling back said second group of instructions provided said second bit is set”
2	“granting said access provided said cache line is in other than said shared state, and otherwise granting said access only when said cache line is in said shared state”
5	“clearing said first bit when said execution of said first group of instructions is ended”
5	“wherein said second bit remains set until execution of said second group of instructions is ended”

6. The ’158 Patent

Claim(s)	Claim Language

1[b]	"a plurality of optics components, wherein each optics component of the plurality of optics components is configured to pass light to a sensor of the plurality of sensors"

For example, independent claim 1 of the '158 Patent recites "each optics component of the plurality of optics components is configured to pass light to a sensor of the plurality of sensors[.]" To the extent limitation 1[b] is broad enough to capture a plurality of optics components configured to pass light from an optics component to a sensor other than the sensor corresponding to the optics component from which the light passed, then the '158 Patent specification does not describe the full scope of claim. For example, the '158 Patent specification discloses passing light from an optics component to that optic component's corresponding sensor (e.g., Figs. 11 and 12), but the'158 Patent specification does not disclose passing light from an optics component to a sensor other than the sensor corresponding to the optics component from which the light passed. For at least these reasons, the specification does not enable or provide sufficient written description support for the asserted claims of the '158 Patent.

7. The '500 Patent

Claim(s)	Claim Language
11	"a multi-level transmit power control (TPC) command"
11	"a plurality of potential values for the multi-level TPC command"
11	"the processor is further configured to determine a transmission power level based on a value of the multi-level TPC command out of a plurality of potential values for the multi-level TPC command"
11	"the plurality of potential values for the multi-level TPC command includes at least two values up or at least two values down"
12	"wherein the processor is further configured to receive an indication as to whether accumulation of TPC commands is enabled"
13	"wherein the processor is further configured to accumulate the TPC command with another TPC command in response to enablement of accumulation of TPC commands"
16	"wherein the single physical channel is associated with a spreading factor or a code division multiple access (CDMA) code"

For example, independent claim 11 of the ’500 Patent recites “wherein the plurality of potential values for the multi-level TPC command includes at least two values up or at least two values down[.]” However, the ’500 Patent specification does not disclose the “potential values for the multi-level TPC command.” Indeed, the ’500 Patent never even uses the term “potential values.” In addition, the specification fails to disclose “at least two values up or at least two values down.” Further, claim 11 of the ’500 patent recites the term “multi-level TPC command.” However, the ’500 Patent does not explain what a “multi-level TPC command” is. For at least these reasons, the specification does not enable or provide sufficient written description support for the asserted claims of the ’500 Patent.

In addition, dependent claim 12 of the ’500 Patent recites “an indication as to whether accumulation of TPC commands is enabled[.]” However, the ’500 Patent does not disclose an indication that accumulation is enabled. For at least this reason, the specification does not enable or provide sufficient written description support for the asserted claim 12.

8. The ’416 Patent

Claim(s)	Claim Language
1	“the receiver configured to receive broadcast information including a plurality of bits, wherein each of the plurality of bits indicates a respective time interval that physical shared channel resources are utilized to signal channels”
1	“the processor communicatively coupled to the receiver and configured to monitor the signaled channels in indicated time intervals, to determine whether signaling information for the UE is present based on an identification of the UE, and to process the signaling information in response to the determination that signaling information for the UE is present”
2	“wherein the respective time interval or each indicated time interval is part of a shared frame that is allocated by a network device
4	“wherein the respective time interval or each indicated time interval is two or more timeslots.”

For example, independent claim 1 of the ’416 Patent recites a “receiver configured to receive broadcast information” and a “processor communicatively coupled to the receiver and

configured to monitor the signaled channels in indicated time intervals, to determine whether signaling information for the UE is present[.]" However, the '416 Patent specification does not disclose, define, or otherwise explain what constitutes broadcast information or signaling information. For at least these reasons, the '416 Patent specification does not enable or provide sufficient written description support for these claim elements.

Similarly, dependent claims 2 and 4 recite "wherein the respective time interval or each indicated time interval" is "part of a shared framed" or "two or more timeslots," respectively. However, the '416 Patent specification does not disclose, define, or otherwise explain the terms "shared frame" and "timeslots", or the mechanism by which one of two time intervals can satisfy these limitations. For at least these reasons, the '416 Patent specification does not enable or provide sufficient written description support for these claim elements.

9. The '138 Patent

Claim(s)	Claim Language
1	"cause the circuitry to receive parameters associated with a plurality of radio bearers"
1	"each of the plurality of buffer occupancies is associated with one or more radio bearers"
1	"cause the transmitter to transmit a message including the plurality of buffer occupancies to a network"
1	"cause the circuitry to receive a single allocation of uplink resources"
1	"select data from the plurality of radio bearers for transmission using the single allocation of uplink resources"
1	"the data is selected from a subset of the plurality of radio bearers based on the received parameters"
1	"the selection of the data is based on buffered data for respective radio bearers"
2	"wherein the plurality of radio bearers are associated with a plurality of channels"

For example, independent claim 1 of the '138 Patent recites "each of the plurality of buffer occupancies is associated with one or more radio bearers[.]" However, the '138 Patent does not disclose "buffer occupancies being associated with more than one radio bearers." For at least this

reason, the specification does not enable or provide sufficient written description support for the asserted claims of the ’138 Patent.

10. The ’153 Patent

Claim(s)	Claim Language
1	“an indication that transmit power control (TPC) command accumulation is enabled”
1	“a multi-level TPC command”
1	“the processor is configured to cause: the receiver to receive, from a network device, an indication that transmit power control (TPC) command accumulation is enabled”
1	“the processor is configured to cause: … the receiver to receive, from the network device, on a single physical channel, scheduling information and power control information that includes a multi-level TPC command”
1	“the processor is configured to cause: … the transmitter to transmit, to the network device, an uplink signal based on the received scheduling information and the multi-level TPC command”
5	“wherein the multi-level TPC command includes a set of values that includes at least two values up or at least two values down”

For example, independent claim 1 of the ’153 Patent recites the term “multi-level TPC command.” However, the ’153 Patent does not explain what a “multi-level TPC command” is. In addition, claim 1 recites “an indication that transmit power control (TPC) command accumulation is enabled[.]” However, the ’153 patent does not disclose an indication that accumulation is enabled. For at least these reasons, the specification does not enable or provide sufficient written description support for the asserted claims of the ’153 patent.

In addition, dependent claim 5 recites “wherein the multi-level TPC command includes a set of values that includes at least two values up or at least two values down.” However, the specification fails to disclose “at least two values up or at least two values down.” For at least this

reason, the specification does not enable or provide sufficient written description support for the asserted claim 5.

11. The ’670 Patent

Claim(s)	Claim Language
1	“wherein the indicated frequency resources and the time resources include control information for use by the UE to acquire a system information block 1.”
1, 2, 3	“first portion of the cell bandwidth”
5	“wherein the transceiver and the processor are configured to switch between the plurality of bandwidth portions at different times”

For example, independent claim 1 of the ’670 Patent recites “wherein the indicated frequency resources and the time resources include control information for use by the UE to acquire a system information block 1.” However, the ’670 Patent specification does not disclose, define, or otherwise explain what constitutes “control information” that is in turn used to “acquire a system information block 1.”

Similarly, claims 1-3 of the ’670 Patent recite a “first portion of the cell bandwidth.” However, the ’670 Patent specification does not disclose, define, or otherwise explain what constitutes a “first portion” of a “cell bandwidth.”

In addition, dependent claim 5 recites “wherein the transceiver and the processor are configured to switch between the plurality of bandwidth portions at different times.” However, the ’670 Patent specification does not disclose, define, or otherwise explain how the “transceiver and the processor are configured to switch between the “bandwidth portions at different times,” or the mechanism by which it is accomplished.

For at least these reasons, the ’416 Patent specification does not enable or provide sufficient written description support for these claim elements.

12. The ’889 Patent

Claim(s)	Claim Language
1	“the transmitter and the processor are configured to transmit a signal over a physical control channel to a base station in a second time slot at a transmission power level based on the extracted power control information.”
1	“the processor is further configured to extract power control information for the first UE from the control message”
2	“wherein the signal transmitted over the physical control channel is produced using a code sequence, wherein a plurality of UEs transmit in the second time slot using different code sequences”
4	“wherein the transmitter and the processor are further configured to transmit the signal over the physical control channel when time synchronized and to transmit a signal over a random access channel when not time synchronized”

For example, independent claim 1 of the ’889 Patent recites “extracted power control information” that is then used to set a “transmission power level” by which a signal is transmitted over a “physical control channel.” However, the ’889 Patent specification does not disclose, define, or otherwise explain how power control information is extracted and then used to set or inform a transmission power level.”

Similarly, claims 2 and 4 of the ’889 Patent recite use of a “code sequence” to produce a signal transmitted over the physical control channel, and use of a “random access channel” to transmit a signal over the physical control channel when time synchronized. However, the ’889 Patent specification does not disclose, define, or otherwise explain how code sequence are used to produce signals or how random-access channels are used to transmit signals when time synchronized.

For at least these reasons, the ’889 Patent specification does not enable or provide sufficient written description support for these claim elements.

VI. ACCOMPANYING DOCUMENT PRODUCTION

A. Additional Prior Art References

Tesla is producing herewith the prior art referenced in these Invalidity Contentions in their production at Bates ranges TESLAIV000000001–9344, TESLAIV000020375–22270, and TESLAIV000022434–24014. Tesla's search for prior art references, additional documentation, and/or corroborating evidence concerning prior art systems is ongoing. Accordingly, Tesla reserves the right to continue to supplement its production as such evidence is obtained after discovery commences.

B. Technical Documents Sufficient to Show the Operation of the Accused Instrumentalities

Tesla is producing herewith technical documents, including software where applicable, sufficient to show the operation of the Accused Instrumentalities at Bates ranges TESLAIV000009345–20374. Tesla will produce other relevant, nonprivileged, nonprotected documents in accordance with the Court's Scheduling Order on a rolling basis as its investigation continues.

Dated: January 9, 2025

Respectfully Submitted,

FISH & RICHARDSON P.C.

By: */s/ Aamir A. Kazi*

Aamir A. Kazi (admitted to W.D. Tex.)
kazi@fr.com
1180 Peachtree Street, 21st Floor
Atlanta, GA 30309
(404) 892-5005

Daniel R. Gopenko (admitted to W.D. Tex.)
gopenko@fr.com
1000 Maine Ave SW, Suite 1000
Washington, DC 20024
(202) 783-5070

David M. Hoffman (TX Bar No. 24046084)
hoffman@fr.com
111 Congress Avenue, Suite 2000
Austin, TX 78701
(512) 472-5070

Matt Colvin (TX Bar No. 24087331)
colvin@fr.com
Michael Ellis (TX Bar No. 24102726)
ellis@fr.com
1717 Main Street, Suite 5000
Dallas, TX 75201
(214) 747-5070

Kathryn Quisenberry (TX Bar No. 24105639)
quisenberry@fr.com
909 Fannin Street, Suite 2100
Houston, TX 77010
(713) 654-5300

TESLA, INC.

Alex Hanna (admitted to W.D. Tex.)
CA Reg. In-House Counsel
alehanna@tesla.com
3000 Hanover Street
Palo Alto, CA 94304
(650) 586-2409

COUNSEL FOR DEFENDANT,
TESLA, INC.

CERTIFICATE OF SERVICE

The undersigned hereby certifies that all counsel of record who are deemed to have consented to electronic service are being served with a copy of this document via electronic mail this 9th day of January, 2025.

/s/ Aamir A. Kazi
Aamir A. Kazi