US 20050128509A1

(19) United States

(12) Patent Application Publication

(10) Pub. No.: US 2005/0128509 A1

(43) Pub. Date: Jun. 16, 2005

Tokkonen et al.

(54) IMAGE CREATING METHOD AND IMAGING DEVICE

(76) Inventors: **Timo Tokkonen**, Oulu (FI); **Markku Rytivaara**, Oulu (FI); **Jakke Makela**, Turku (FI); **Kai Ojala**, Oulu (FI); **Timo Kolehmainen**, Oulu (FI)

Correspondence Address:
CRAWFORD MAUNU PLLC
1270 NORTHLAND DRIVE, SUITE 390
ST. PAUL, MN 55120 (US)

(21) Appl. No.: **10/733,784**

(22) Filed: **Dec. 11, 2003**

Publication Classification

(51) **Int. Cl.**[7] **G06F 15/00**

(52) **U.S. Cl.** **358/1.15**; 358/448

(57) **ABSTRACT**

A method of creating an image file and an imaging device comprising at least two image capturing apparatus is provided. Each apparatus is arranged to produce an image, wherein at least one first apparatus comprises a color filter matrix of red and blue elements, and at least one second apparatus comprises a green color filter. A controller is arranged to combine the images produced with the apparatus with each other to produce an image with an enhanced image quality.

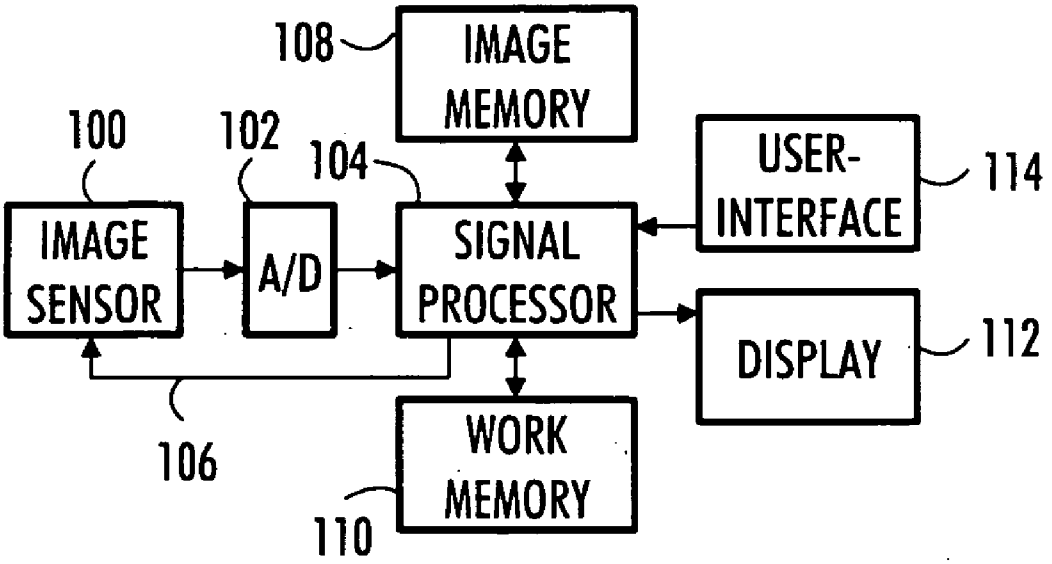

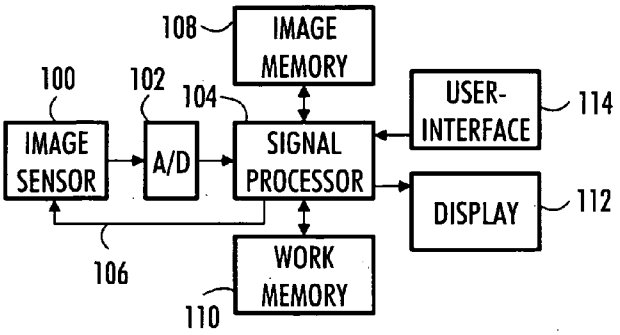

FIG. 1

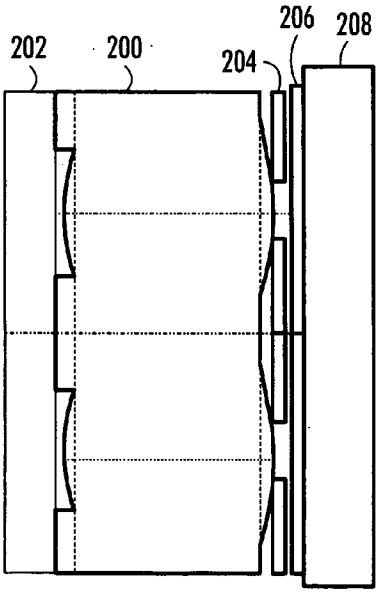

FIG. 2A

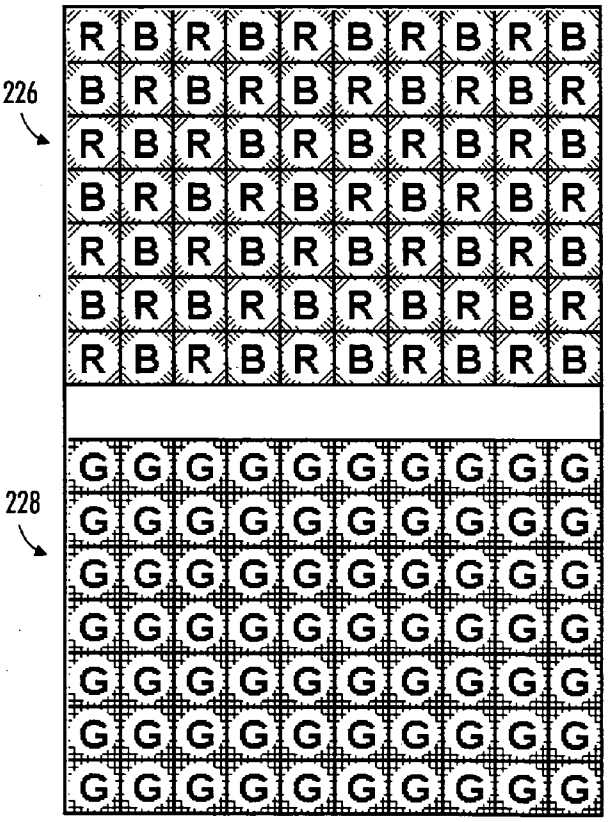

FIG. 3

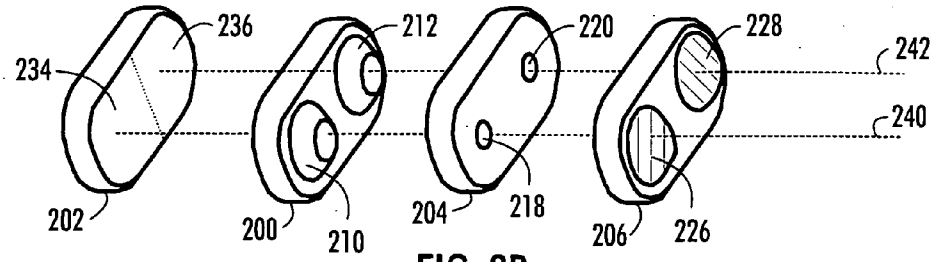

FIG. 2B

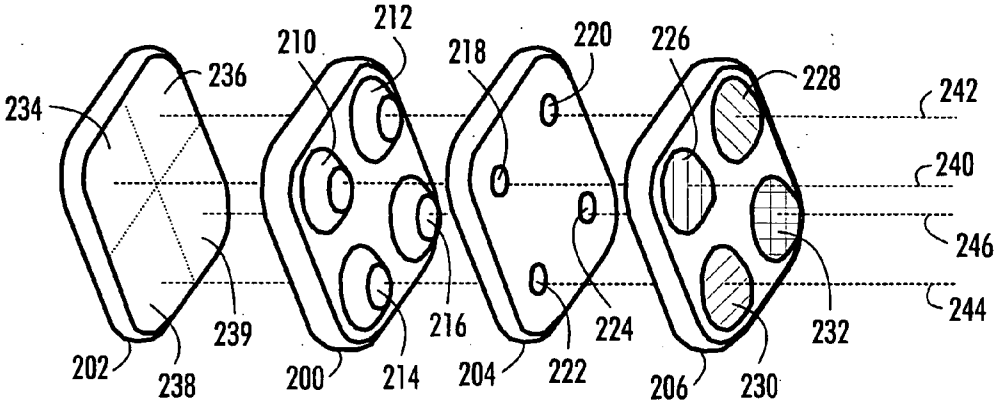
234
236
210
212
218
220
226
228
242
240
246
244
202
238
239
200
214
216
204
222
224
206
230
232

FIG. 4

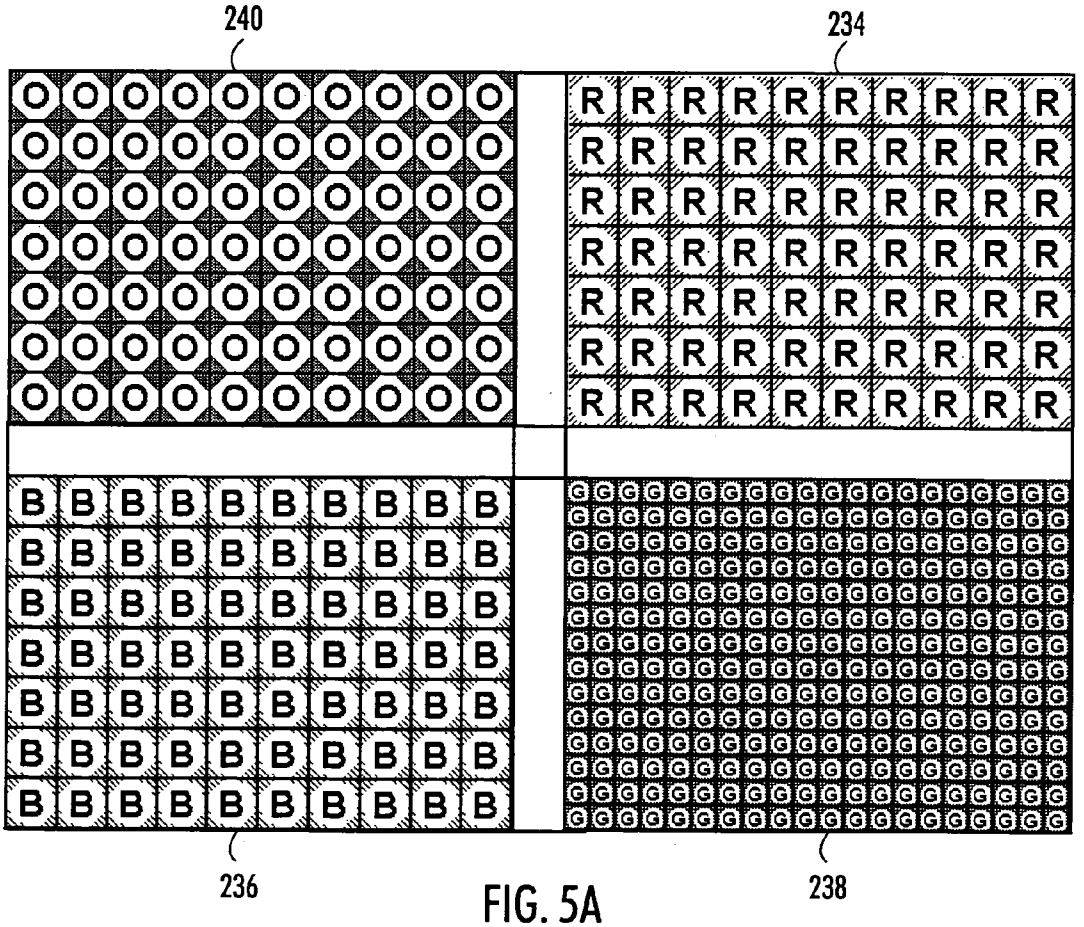
240
234
236
238

FIG. 5A

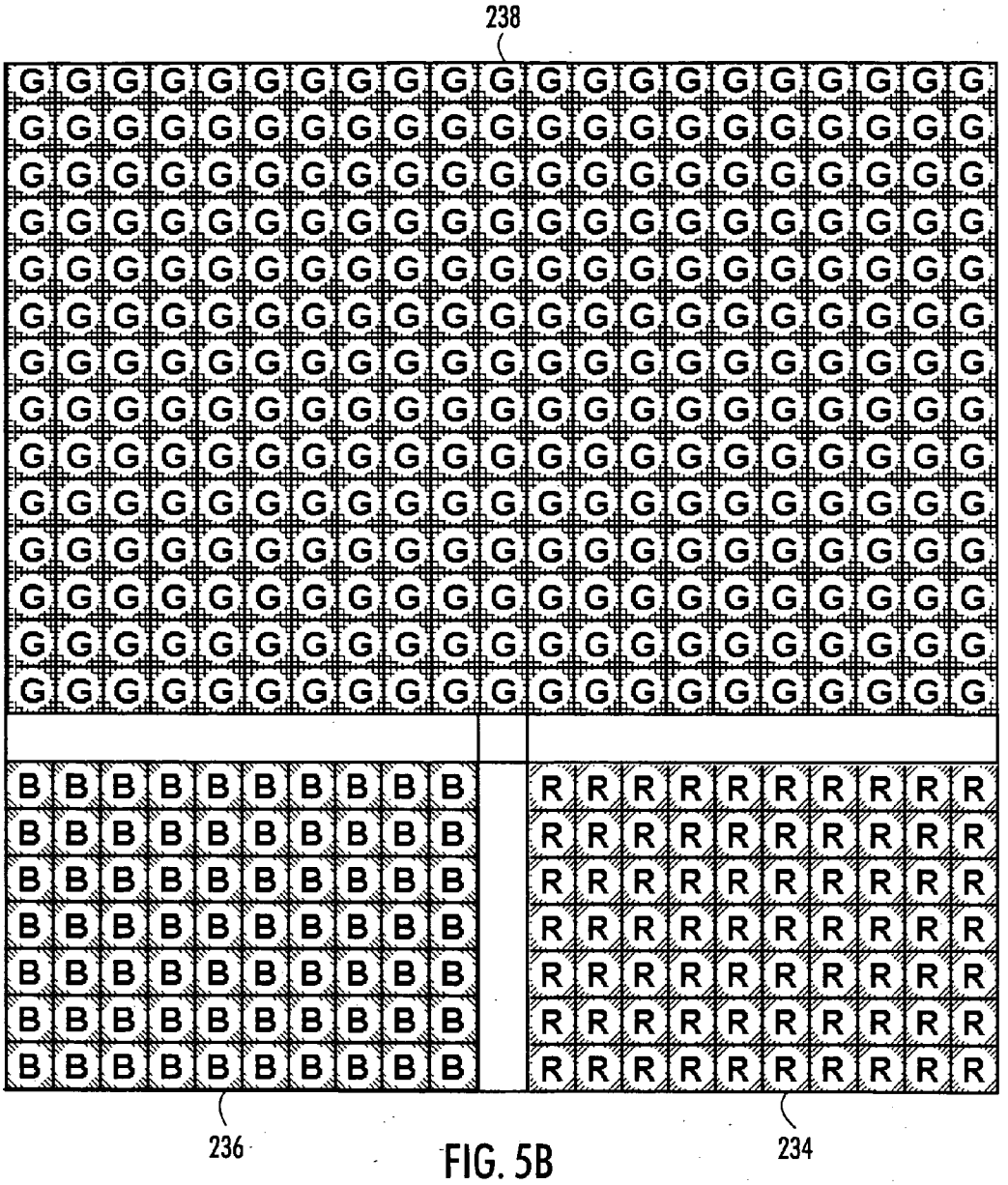

FIG. 5B

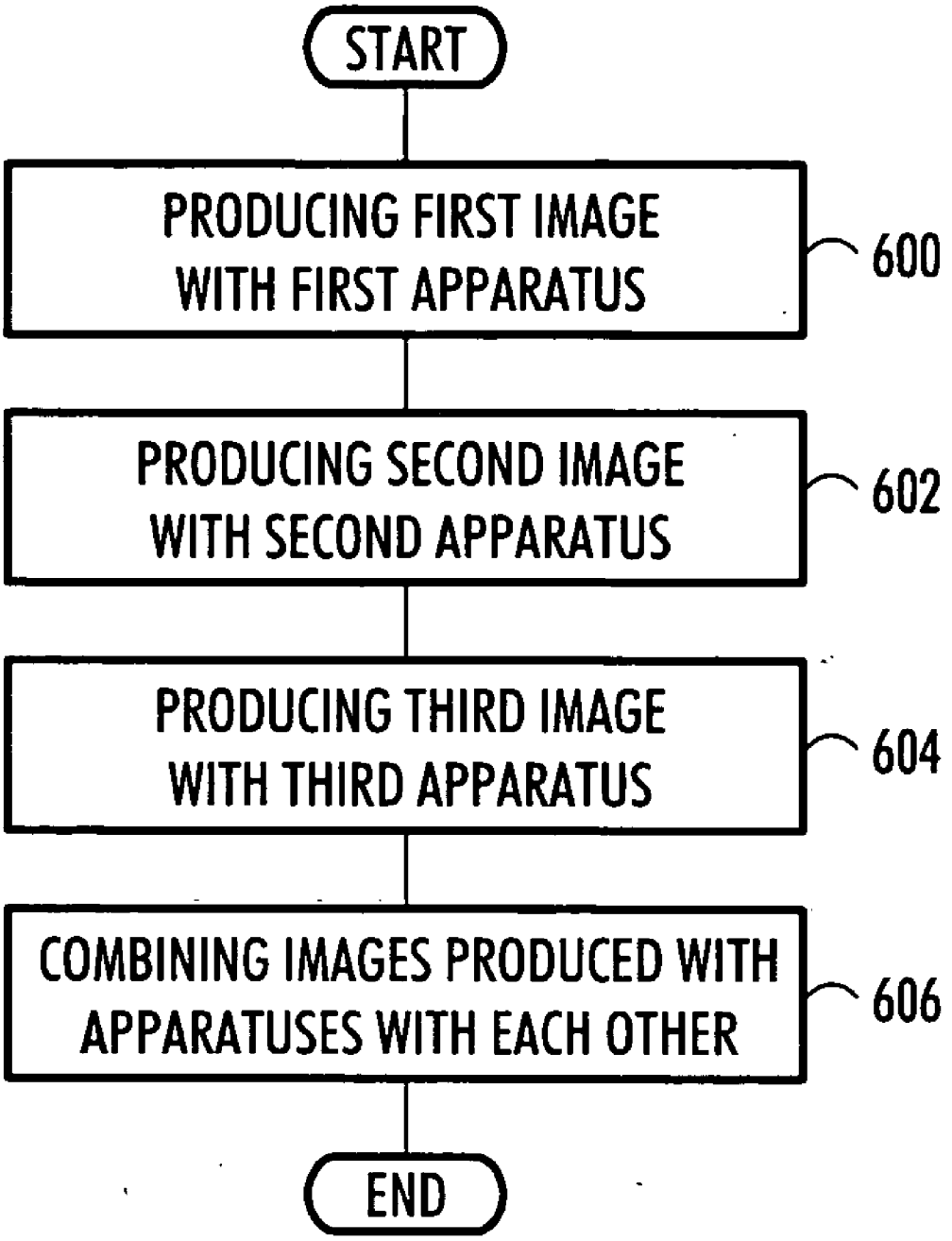
START
PRODUCING FIRST IMAGE WITH FIRST APPARATUS
600
PRODUCING SECOND IMAGE WITH SECOND APPARATUS
602
PRODUCING THIRD IMAGE WITH THIRD APPARATUS
604
COMBINING IMAGES PRODUCED WITH APPARATUSES WITH EACH OTHER
606
END

FIG. 6

IMAGE CREATING METHOD AND IMAGING DEVICE

FIELD

[0001] The invention relates to an imaging device and a method of creating an image file. Especially the invention relates to digital imaging devices comprising more than one image capturing apparatus.

BACKGROUND

[0002] The popularity of photography is continuously increasing. This applies especially to digital photography as the supply of inexpensive digital cameras has improved. Also the integrated cameras in mobile phones have contributed to the increase in the popularity of photography.

[0003] The quality of images is naturally important for every photographer. The images obtained with the camera should naturally be sharp and clear and the colors should be balanced. Normally, in digital cameras, color images are taken with a color filter matrix placed in front of the image sensor of the camera. A typical color filter matrix is a Bayer matrix, which comprises a 2×2 grid of color filters. The grid comprises of one red, one blue and two green filters. Each filter covers a pixel in the image sensor. Thus, in the final image, a pixel is calculated using four physical image sensor pixels. Due to the human eye spectral sensitivity to the green color, the Bayer filter matrix comprises twice as many green elements as red or blue elements. Although the above structure gives adequate images, the pixel interpolation does not result in an optimal image quality.

BRIEF DESCRIPTION OF THE INVENTION

[0004] An object of the invention is to provide an improved solution for creating color images. According to an aspect of the invention, there is provided an imaging device comprising at least two image capturing apparatus, each apparatus being arranged to produce an image, wherein at least one first apparatus comprises a color filter matrix of red and blue elements, and at least one second apparatus comprises a green color filter. The device further comprises a controller arranged to combine the images produced with the apparatus with each other to produce an image with an enhanced image quality.

[0005] According to another aspect of the invention, there is provided a method of creating an image file in an imaging device, comprising producing images with at least two image capturing apparatus, wherein at least one first apparatus comprises a color filter matrix of red and blue elements, and at least one second apparatus comprises a green color filter.

[0006] The method and system of the invention provide several advantages. One advantage of the invention is the improved image resolution obtained by the imaging device. Another advantage of the invention is the possibility to use the apparatus with the green color filter for capturing gray-scale images.

LIST OF DRAWINGS

[0007] In the following, the invention will be described in greater detail with reference to the preferred embodiments and the accompanying drawings, in which

[0008] **FIG. 1** illustrates an example of an imaging device of an embodiment;

[0009] **FIG. 2A and 2B** illustrate an example of an image sensing arrangement, and

[0010] **FIG. 3** illustrates an example of the structure of color filters;

[0011] **FIG. 4** illustrates an example of a four-lens lenslet,

[0012] **FIGS. 5A and 5B** illustrate image sensor array arrangements and

[0013] **FIG. 6** illustrates an embodiment of the invention.

DESCRIPTION OF EMBODIMENTS

[0014] **FIG. 1** illustrates a generalized digital image device which may be utilized in some embodiments of the invention. It should be noted that embodiments of the invention may also be utilized in other kinds of digital cameras than the apparatus of **FIG. 1**, which is just an example of a possible structure.

[0015] The apparatus of **FIG. 1** comprises an image sensing arrangement **100**. The image sensing arrangement comprises a lens assembly and an image sensor. The structure of the arrangement **100** will be discussed in more detail later. The image sensing arrangement captures an image and converts the captured image into an electrical form. The electric signal produced by the apparatus **100** is led to an A/D converter **102** which converts the analogue signal into a digital form. From the converter the digitized signal is taken to a signal processor **104**. The image data is processed in the signal processor to create an image file. The output signal of the image sensing arrangement **100** comprises raw image data which needs post processing, such as white balancing and color processing. The signal processor is also responsible for giving exposure control commands **106** to the image sensing arrangement **100**.

[0016] The apparatus may further comprise an image memory **108** where the signal processor may store processed images, a work memory **110** for data and program storage, a display **112** and a user interface **114**, which typically comprises a keyboard or corresponding means for the user to give input to the apparatus.

[0017] **FIG. 2A** illustrates an example of image sensing arrangement **100**. The image sensing arrangement comprises in this example a lens assembly **200** which comprises two lenses. The arrangement further comprises an image sensor **202**, an aperture plate **204**, a color filter arrangement **206** and an infra-red filter **208**.

[0018] **FIG. 2B** illustrates the structure of the image sensing arrangement from another point of view. In this example the lens assembly **200** comprises two separate lenses **210** and **212**. Correspondingly, the aperture plate **204** comprises a fixed aperture **218**, **220** for each lens. The aperture plate controls the amount of light that is passed to the lens. It should be noted that the structure of the aperture plate is not relevant to the embodiments, i.e. the aperture value of each lens needs not be the same.

[0019] The color filter arrangement **206** of the image sensing arrangement comprises in this example a color filter for each lens. The color filter **226** of lens **210** comprises a color matrix of red and blue. The color filter **228** of the lens

212 comprises a single color filter of the green color. The sensor array **202** is in this example divided into two sections **234** and **236**. Thus, the image sensing arrangement comprises in this example two image capturing apparatus **240** and **242**. Thus, the image capturing apparatus **240** comprises the color filter **226**, the aperture **218**, the lens **210** and the section **234** of the sensor array. Correspondingly, the image capturing apparatus **242** comprises the color filter **228**, the aperture **220**, the lens **212** and the section **236** of the sensor array.

[**0020**] The image sensing arrangement of **FIGS. 2A and 2B** is thus able to form two separate images on the image sensor **202**. The image sensor **202** is typically, but not necessarily, a single solid-state sensor, such as a CCD (Charged Coupled Device) or CMOS (Complementary Metal-oxide Semiconductor) sensor known to one skilled in the art. In an embodiment, the image sensor **202** may be divided between lenses, as described above. The image sensor **202** may also comprise two different sensors, one for each lens. The image sensor **202** converts light into an electric current. This electric analogue signal is converted in the image capturing apparatus into a digital form by the A/D converter **102**, as illustrated in **FIG. 1**. The sensor **202** comprises a given number of pixels. The number of pixels in the sensor determines the resolution of the sensor. Each pixel produces an electric signal in response to light. The number of pixels in the sensor of an imaging apparatus is a design parameter. Typically in low cost imaging apparatus the number of pixels may be 640×480 along the long and short sides of the sensor. A sensor of this resolution is often called a VGA sensor. In general, the higher the number of pixels in a sensor, the more detailed image can be produced by the sensor.

[**0021**] The image sensor **202** is thus sensitive to light and produces an electric signal when exposed to light. However, the sensor is not able to differentiate different colors from each other. Thus, the sensor as such produces only black and white images. A number of solutions are proposed to enable a digital imaging apparatus to produce color images. It is well known for one skilled in the art that a full color image can be produced using only three basic colors in the image capturing phase. One generally used combination of the three suitable colors is red, green and blue RGB.

[**0022**] One solution used in single lens digital image capturing apparatus is to provide a color filter array in front of the image sensor, the filter consisting of a three-color pattern of RGB or CMY colors. Such a solution is sometimes called a Bayer matrix. When using an RGB Bayer matrix filter, each pixel is typically covered by a filter of a single color in such a way that in the horizontal direction every other pixel is covered with a green filter and every other pixel is covered by a red filter on every other line and by a blue filter on every other line. A single color filter passes through to the sensor pixel under the filter light which wavelength corresponds to the wavelength of the single color. The signal processor interpolates the image signal received from the sensor in such a way that all pixels receive a color value for all three colors. Thus a full color image can be produced.

[**0023**] In the multiple lens embodiment of **FIG. 2A** a different approach is used in producing a color image. The image sensing arrangement comprises a color filter arrangement **206** in front of the lens assembly **200**. In practice the filter arrangement may also be located in a different part of the arrangement, for example between the lenses and the sensor. In an embodiment, the color filter **206** comprises separate filters, each filter in front of a different lens. The color filter **226** in front of the lens **210** comprises a color matrix of red and blue colors.

[**0024**] **FIG. 3** illustrates an example of a structure of the color filters. The color filter **226** comprises a color matrix, where each matrix element acts as a separate color filter for a pixel on the image sensor **234**. In the matrix, every other element is red and every other element is blue. Thus, every other pixel in the image sensor produces a signal responsive to the red color and every other pixel produces a signal responsive to the blue color. In **FIG. 3**, the red elements are marked with R and blue elements with B. The red and blue elements may also be in another order in the color matrix.

[**0025**] The color filter **228** in front of the lens **212** is of the green color. It may be realized with a single green filter or a color matrix where all elements are of the same color. **FIG. 3** illustrates an example of a structure of the color filter **228** realized with a color matrix.

[**0026**] As illustrated in **FIG. 2A**, the lens assembly may in an embodiment comprise an infra-red filter **208** associated with the lenses. The infra-red filter does not necessarily cover all lenses, as it may also be situated elsewhere, for example between the lenses and the sensor.

[**0027**] Each lens of the lens assembly **200** thus produces a separate image to the sensor **202**. The sensor area is divided between the lenses in such a way that the images produced by the lenses are not overlapping. The area of the sensor divided between the lenses may be equal, or the areas may be of different size, depending on the embodiment. The sensor **202** is a VGA sensor, for example. The size of the sensor is not relevant regarding the embodiments of the invention.

[**0028**] As described above, the electric signal produced by the sensor **202** is digitized and taken to the signal processor **104**. The signal processor processes the signals from the sensor in such a way that two separate subimages from the signals of the lenses **210** to **212** are produced. The signal processor further processes the subimages and combines a VGA resolution image from the subimages.

[**0029**] In an embodiment, when composing the final image, the signal processor **104** may take into account the parallax error arising from the distances of the lenses **210** and **212** from each other.

[**0030**] The electric signal produced by the sensor **202** is digitized and taken to the signal processor **104**. The signal processor processes the signals from the sensor in such a way that two separate subimages from the signals of the lenses **210**, **212** are produced, another filtered with red and blue, the other with the green color. The signal processor further processes the subimages and combines a VGA resolution image from the subimages. The top left pixels of the subimages correspond to each other and differ only in that the color filter used in producing the pixel information is different. Due to the parallax error the same pixels of the subimages do not necessarily correspond to each other. In an embodiment the parallax error is compensated by an algorithm. The final image formation may be described as

comprising many steps: first the two subimages are registered (also called matching). Registering means that any two image points are identified as corresponding to the same physical point). Then, the subimages are interpolated and the interpolated subimages are fused to an RGB-color image. Interpolation and fusion may also be in another order.

[**0031**] As one apparatus produces an image filtered with the green color, to which the human eye is most sensitive, the final composed image will have enhanced image resolution compared to images taken with prior art devices.

[**0032**] In embodiment of the invention, a lenslet with at least three image capturing apparatus is utilized. The image sensing arrangement comprises in this example a lens assembly **200** which comprises a lenslet array with four lenses.

[**0033**] **FIG. 4** illustrates the structure of an image sensing arrangement. In this example the lens assembly **200** comprises four separate lenses **210** to **216** in a lenslet array. Respectively, the aperture plate **204** comprises a fixed aperture **218** to **224** for each lens. The aperture plate controls the amount of light that is passed through the lens. It should be noted that the structure of the aperture plate is not relevant to the embodiments, i.e. the aperture value of each lens needs not be the same. The number of lenses is not limited to four, either.

[**0034**] The sensor array **202** is in this example divided into four sections **234** to **239**. Thus, the image sensing arrangement comprises in this example four image capturing apparatus **240** to **246**. Thus, the image capturing apparatus **240** comprises color filter **226**, the aperture **218**, the lens **210** and a section **234** of the sensor array. Correspondingly, the image capturing apparatus **242** comprises the color filter **228**, the aperture **220**, the lens **212** and the section **236** of the sensor array and the image capturing apparatus **244** comprises the color filter **230**, the aperture **222**, the lens **214** and the section **238** of the sensor array. The fourth image capturing apparatus **246** comprises the aperture **224**, the lens **216** and the section **239** of the sensor array. The fourth apparatus **246** may or may not comprise a color filter **232**.

[**0035**] The color filter arrangement **206** of the image sensing arrangement comprises in this example a red, green, blue filter and one optional filter. The optional filter may be used to enhance final image quality or the usage scope of the camera. The filters can be located on the sensor pixels, between the lens and the sensor, inside the lens system or in front of the lenses. In an embodiment, the red and blue sub-camera sensor areas are equal to the green sensor physical dimensions. The sensor for the green wavelength may have a smaller pixel size than the sensor areas for red and blue wavelengths. Thus, green channel resolution will be better because there are more pixels in the same physical area. The sub-camera lens for the green wavelength should be designed such that it is matched with better resolution.

[**0036**] The final image is composed by registering subimages to each other. After that they are interpolated to the target size. The final color image is composed from the scaled images.

[**0037**] **FIG. 6** illustrates an embodiment. In step **600**, a first image is produced with a given resolution with a first apparatus comprising a red color filter. In step **602**, a second image is produced with a given resolution with a second apparatus comprising a blue color filter. Step **604** comprises producing a third image with a given resolution with a third apparatus comprising a green color filter. The resolution of the third apparatus is higher than the resolution of the first and second apparatus. In an embodiment the steps **600** to **604** are executed simultaneously. In step **606** the images produced with the apparatus are combined with each other to produce an image with an enhanced image quality.

[**0038**] **FIG. 5A** illustrates an embodiment of the invention when a lenslet system with four lenses is utilized. The arrangement comprises thus four image sensing apparatus **240** to **246**. The apparatus **240** is arranged to capture images through a red filter, the apparatus **242** is arranged to capture images-through a blue filter, and the apparatus **244** is arranged to capture images through a green filter. The fourth apparatus **246** is used for a special optional purpose. **FIG. 5A** shows the pixels of the image sensor **202**. The sensor area is divided between the four image capturing apparatus. In **FIG. 5A**, the letters R, B, G and O denote the apparatus to which each pixel is allocated. The pixels of the section **234** are allocated for the apparatus **240** producing images through a red filter. The pixels of the section **236** are allocated for the apparatus **242** producing images through a blue filter. The pixels of the section **238** are allocated for the apparatus **244** producing images through a green filter. Finally, the pixels of the section **239** are allocated for the fourth apparatus **246**.

[**0039**] The sensor areas of each apparatus are about equal, but the pixel size of the area **238** allocated for the apparatus **244** producing images through a green filter is smaller. In this example, the spatial resolution of the green area is two times higher compared to the other areas. Thus, the green channel resolution will higher. The lens of the image sensing apparatus **244** is designed to match the sensor area and the pixel size.

[**0040**] **FIG. 5B** illustrates another embodiment of the invention where a lenslet system is utilized. The **FIG. 5B** shows the pixels of the image sensor **202**. The sensor area is divided between the image capturing apparatus. The letters R, B and G denote the apparatus to which each pixel is allocated. The pixels of the section **234** are allocated for the apparatus **240** producing images through a red filter. The pixels of the section **236** are allocated for the apparatus **242** producing images through a blue filter. The pixels of the section **238** are allocated for the apparatus **244** producing images through a green filter.

[**0041**] In this embodiment, the pixel sizes in each sensor area allocated to different apparatus are about equal. However, the area **238** allocated for the apparatus **244** producing images through a green filter is larger than the areas allocated for the apparatus producing images through red and blue filters. In this example, the size of the area **238** is twice the size of areas **234** and **236**. Thus, the spatial resolution of the green area is two times better compared to the other areas and the green channel resolution is correspondingly higher. The lens of the image sensing apparatus **244** is designed to match the sensor area.

[**0042**] Even though the invention is described above with reference to an example according to the accompanying drawings, it is clear that the invention is not restricted thereto but it can be modified in several ways within the scope of the appended claims.

1. An imaging device comprising

at least two image capturing apparatus, each apparatus being arranged to produce an image, wherein at least one first apparatus comprises a color filter matrix of red and blue elements, and at least one second apparatus comprises a green color filter,

a controller arranged to combine the images produced with the apparatus with each other to produce an image with an enhanced image quality.

2. The device of claim 1, further comprising a controller arranged to produce a single color image from the image taken with the second apparatus.

3. The device of claim 1, wherein the second apparatus comprises a color filter matrix of green elements.

4. An imaging device comprising

a lenslet array with at least three image capturing apparatus, each apparatus being arranged to produce an image, wherein a first apparatus comprises a red color filter, a second apparatus comprises a blue color filter, and a third apparatus comprises a green color filter, each apparatus comprising an image sensor, wherein the image sensor of the third apparatus is larger than the image sensors of the first and second apparatus, and

a controller arranged to combine the images produced with the apparatus with each other to produce an image with an enhanced image quality.

5. The device of claim 4, wherein the image sensor of the third apparatus is at least twice as large as the image sensors of the first and second apparatus.

6. An imaging device comprising

a lenslet array with at least three image capturing apparatus, each apparatus being arranged to produce an image, wherein a first apparatus comprises a red color filter, a second apparatus comprises a blue color filter, and a third apparatus comprises a green color filter, each apparatus comprising an image sensor consisting of pixels, wherein the number of pixels in the image sensor of the third apparatus is larger than the number of pixels in the image sensors of the first and second apparatus, and

a controller arranged to combine the images produced with the apparatus with each other to produce an image with an enhanced image quality.

7. The device of claim 6, wherein the number of pixels in the image sensor of the third apparatus is at least twice as large as the number of pixels in the image sensors of the first and second apparatus.

8. A method of creating an image file in an imaging device, comprising

producing images with at least two image capturing apparatus, wherein at least one first apparatus comprises a color filter matrix of red and blue elements and at least one second apparatus comprises a green color filter.

9. The method of claim 8, further comprising: combining the images produced with the apparatus with each other to produce an image with an enhanced image quality.

10. The method of claim 8, further comprising: producing a single color image from the image taken with the second apparatus.

11. A method of creating an image file in an imaging device comprising a lenslet array with at least three image capturing apparatus, the method comprising

producing a first image with a given resolution with a first apparatus comprising a red color filter,

producing a second image with a given resolution with a second apparatus comprising a blue color filter,

producing a third image with a given resolution with a third apparatus comprising a green color filter, wherein the resolution of the third apparatus is larger than the resolution of the first and second apparatus, and

combining the images produced with the apparatus with each other to produce an image with enhanced image quality.

* * * * *