Exhibit 596-13

Invalidity of the ’596 Patent by Matsunami ’462 and Other Prior Art

The asserted claims of U.S. Patent No. 8,924,596 are anticipated and/or rendered obvious in view of US6810462B2 (“Matsunami ’462”) alone or in combination with knowledge of one of skill in the art or other prior art.

This claim chart is based on Defendants’ present understanding of the asserted claims, Plaintiffs’ vague and overbroad infringement contentions (and corresponding, implicit claim constructions), and Defendants’ investigation to date. Defendants are not adopting Plaintiffs’ apparent constructions, nor are Defendants admitting to the correctness of any particular construction. Defendants reserve all rights to amend this invalidity claim chart in light of any claim construction developments or any amendments to Plaintiffs’ infringement contentions. Further, as discovery is ongoing and Defendants continue to seek discovery from third parties regarding the references identified in Defendants’ invalidity contentions as well as other potential prior art, Defendants reserve the right to amend or supplement this claim chart in connection with Defendants’ continuing investigation. At a minimum, Defendants intend to revise these invalidity contentions as appropriate based on discovery from third parties as discovery progresses.

The claim chart below identifies where each limitation of each asserted claim of the ’596 patent can be found in Matsunami ’462. This analysis is based on Plaintiff’s interpretation of the claims as indicated in their Infringement Contentions. The citations provided below are exemplary, rather than exhaustive, and Defendants reserve the right to rely upon any other portion of the cited references.

Claim Language	Exemplary Evidence of Anticipation and/or Obviousness
[1pre] A system for dividing and synchronizing a processing task across a plurality of processing elements comprising:	
[1a] an input queue implemented in hardware;	
[1b] an output queue implemented in hardware;	
[1c] a first processing element having access to said input queue and said output queue;	
[1d] at least one second processing element in communication with said first processing element;	

IPR2025-00223
Concurrent Ventures LLC, XtreamEdge Inc. EX2031

Claim Language	Exemplary Evidence of Anticipation and/or Obviousness
[1e] a reservation register implemented in hardware storing a value indicative of available space in said input queue, said reservation register accessible by both said first processing element and said at least one second processing element;	
[1f] computer storage storing instructions, which when executed by said at least one second processing element:	
[1g] accesses said reservation register and reads said stored value;	
[1h] determines when said read value indicates available space in said input queue for said first processing element to issue a command;	
[1i] notifies said first processing element to issue said command to said input queue; and	
[1j] wherein said first processing element receives notification from said at least one second processing element regarding issuing the command, issues said command to said input queue, and receives a	

Claim Language	Exemplary Evidence of Anticipation and/or Obviousness
response corresponding to said command from said output queue.	
2. The system of claim 1, wherein said input queue is a first-in-first-out (FIFO) buffer.	
3. The system of claim 1, wherein said system is part of a storage area network (SAN) controller.	Matsunami ’462 teaches “[t]he system of claim 1, wherein said system is part of a storage area network (SAN) controller,” including at least the following exemplary citations. For example, Matsunami ’462 teaches wherein said system is part of a storage area network (SAN) controller, by disclosing, as non–limiting examples, a combined SAN/NAS controller. The combined SAN/NAS controller may be used in a SAN. *See, e.g.:* “A storage has NAS and SAN functions and a high degree of freedom to configure a system to reduce the management and operation cost. The storage includes a plurality of interface slots in which a plurality of interface controllers can be installed, a block I/O interface controller which has SAN functions and which can be installed in the slot, a file I/O interface controller which has NAS functions and which can be installed in the slots, a storage capacity pool including a plurality of disk devices accessible from the interface controllers, and a storage capacity pool controller to control the storage capacity pool.” Matsunami ’462 at Abstract.

Claim Language	Exemplary Evidence of Anticipation and/or Obviousness
	FIG. 1 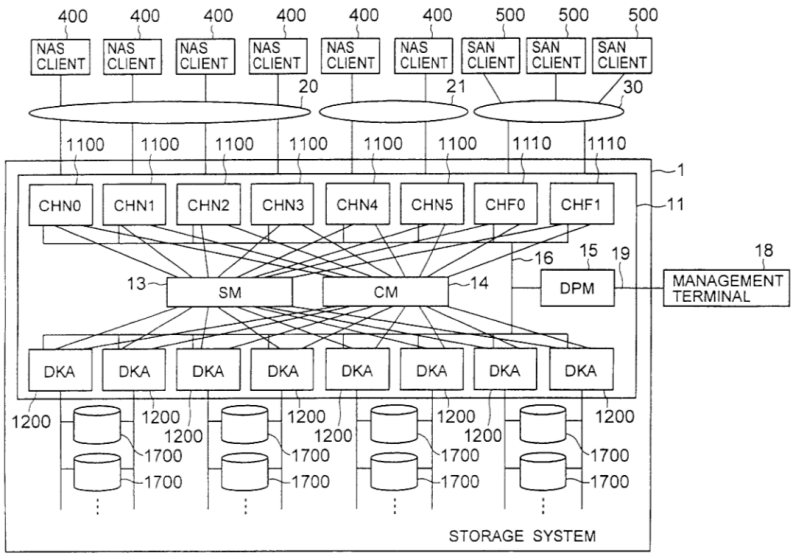 Matsunami ’462 at Figure 1.

Claim Language	Exemplary Evidence of Anticipation and/or Obviousness
	FIG. 5 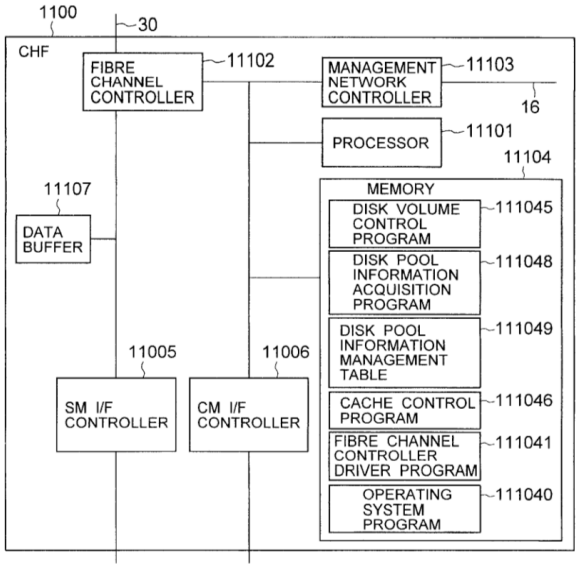 Matsunami ’462 at Figure 5.

Claim Language	Exemplary Evidence of Anticipation and/or Obviousness
	FIG. 10 13100 13101 13102 13103 SLOT ADDRESS / CHANNEL ADAPTER ID NO. / CHANNEL ADAPTER TYPE / STATE 0 / CHN100B0013 / CHN / NORMAL 1 / CN100B0059 / CHN / NORMAL 2 / CHN100B0153 / CHN / NORMAL 3 / CHN500A1936 / CHN / NORMAL 4 / CHN500A1940 / CHN / NORMAL 5 / CHN500A2002 / CHN / NORMAL 6 / CHF500A1234 / CHF / NORMAL 7 / CHF500A2199 / CHF / NORMAL 1310 CHANNEL ADAPTER MANAGEMENT TABLE Matsunami ’462 at Figure 10. “First, a block input/output (I/O) interface is used to conduct I/O operations between a storage system and a computer using a unit of blocks as a data control unit in the storage system. The block I/O interface includes a Fibre Channel, a small computer systems interface (SCSI), and the like. A network in which a plurality of storage systems having a block I/O interface are connected to a plurality of computers is called a storage area network (SAN). SAN includes a Fibre Channel in many cases. JP-A-10-333839 describes an example of a storage system connected to a storage area network using a Fibre Channel.” Matsunami ’462 at col. 1, ll. 12–23. “In a storage are network (SAN), the computer is connected to the storage system via a high-speed network exclusively constructed for the storage system, the network being separated from a network used to exchange messages between computers. Therefore, in the SAN higher speed data communication can be executed when compared with the NAS connected via the LAN to the computer. Since the SAN adopts the block I/O interface, overhead of protocol processing is lowered when compared with the NAS, and hence a high-speed response can be achieved.

Claim Language	Exemplary Evidence of Anticipation and/or Obviousness
	However, since the SAN requires a network system dedicated to the storage system, installation of the SAN requires a higher cost. Therefore, the SAN is primarily used in a backbone system of an enterprise to construct a database in many cases." Matsunami '462 at col. 1, ll. 36–50. "As above, the NAS and the SAN are complementary to each other and are applied to mutually different fields. Therefore, the NAS and the SAN are respectively used in appropriate fields." Matsunami '462 at col. 2, ll. 1–4. "When it is desired to construct a system including a SAN and a NAS according to the prior art, a NAS and a storage system having functions of the SAN are required. In this case, the user of the constructed system must separately manage or control the storage systems of different types. This results in a problem of increase in the cost for the management and operation, of the system. In the system including both the storage system having the NAS functions and the storage system having the SAN functions, the system user must manage the storage capacity for each storage system. Specifically, for each storage, the user must set an environment configuration and must manage its storage capacity. Consequently, there arises a problem that the management of the storage system becomes complex and difficult. Assume that the storage capacity of the storage system used by the SAN is insufficient in a system including the SAN and the NAS. In this situation, even if NAS has available or enough storage capacity, the user cannot freely use the storage capacity of the NAS because the respective storage systems are separately or differently managed. That is, there arises a problem that the user cannot efficiently use the total capacity of the overall system. It is therefore an object of the present invention to provide a storage system capable of reducing the management and operation cost for storage systems of a plurality of types." Matsunami '462 at col. 2, ll. 14–39. "The interface controllers of a plurality of types may include a block I/O interface controller having functions of a SAN and a file I/O interface controller having functions of a NAS." Matsunami '462 at col. 2, ll. 49–52. "The storage system 1 is connected via an LAN 20 and an LAN 21 to NAS clients 400. In the embodiment, each of the LAN 20 and 21 is an internet protocol (IP) network (to be simply referred to as a network hereinbelow). The storage system 1 is also connected via a SAN 30 to SAN clients 500. In the embodiment, the SAN 30 includes a Fibre Channel." Matsunami '462 at col. 3, ll. 28–33.

Claim Language	Exemplary Evidence of Anticipation and/or Obviousness
	"As above, the storage system 1 is a storage system including the SAN which includes the Fibre Channel and which uses the block I/O interface and the NAS which includes the IP networks and which uses the file I/O interface. That is, the storage system 1 includes different type interfaces. Any combination of the interface for SAN and the interface for NAS is available for the storage system 1. As one combination, the system 1 may be configured with the interface only for SAN or NAS." Matsunami '462 at col. 3, ll. 42–51. "The network channel adapter 1100 is an interface controller connected via the file I/O interface to NAS clients 400. The Fibre Channel adapter 1110 is an interface controller connected via the block I/O interface to SAN clients 500. The adapters 1100 and 1200 will be collectively referred to as channel adapters (CH) hereinbelow." Matsunami '462 at col. 3, ll. 60–65. "In the storage system 1, any channel adapter can access the cache memory 14 and all disks 1700. Such a configuration can be constructed using, for example, a crossbar switch." Matsunami '462 at col. 4, ll. 9–12. "FIG. 5 shows an internal configuration of the Fibre Channel adapter 1110. The adapter 1110 includes a processor 11101, a Fibre Channel controller 11102, a management network controller 11103, a memory 11104, an SM controller 11005, a CM controller 11006, and a data buffer 1107." Matsunami '462 at col. 5, ll. 46–50. "The processor 11101 controls overall operation of the adapter 1110. The Fibre Channel controller 11102 controls communication between the adapter 1110 and the SAN. The management network controller 11103 controls communication between the adapter 1110 and the management network 16. The memory 11104 connected to the processor 11101 stores programs to be executed by the processor 11101 and control data." Matsunami '462 at col. 5, ll. 51–58. "The table 1311 includes an entry 13110 for a number assigned to the disk pool 6, an entry 1311 for a number assigned to the RG 17000, an entry 1312 for a number assigned to the LDEV 170, an entry 1313 for information of the capacity of the LDEV 170, an entry 1314 for a number assigned to the logical volume (LV), a CN entry 1315 for a sequence number of the LDEV 170 of the LV, an entry 1316 for a number of a channel adapter to which an associated LV is assigned, and entry 1317 for an S-N sharing information indicating possibility of sharing of the channel adapter with respect to the disk pool 6, RG, and LV, namely, between SAN (CHF) and NAS (CHN); an entry 1318 for S—S sharing information indicating possibility of sharing between SAN adapters (CHFs), an entry 1319 for N—N sharing information indicating possibility of sharing between NAS adapters (CHNs), and an entry 1320 for user class sharing information. The sharing

Claim Language	Exemplary Evidence of Anticipation and/or Obviousness
	information between a plurality of CHs (to be referred to as intra-CH sharing information hereinbelow) and the like will be described later. The CN is a number indicating a sequence of connection when a plurality of LDEV 170 are connected to each other to create a logical volume." Matsunami '462 at col. 7, ll. 39–60. "The table 1310 includes an entry 13100 for an address of a channel adapter in the management network 16, the channel adapter being installed in the storage system 1, an entry 13101 for an identifier number of the channel adapter, an entry 13102 for information of a type of the channel adapter, and an entry 13103 for information of a state of operation of the channel adapter." Matsunami '462 at col. 8, ll. 6–12. "The recognition processing is applicable to any channel adapters regardless of the channel adapter types such as a network channel adapter 1100 and a Fibre Channel adapter 1110." Matsunami '462 at col. 9, ll. 64–67. "According to the embodiment, there can be implemented a storage system including an arbitrary combination of a plurality of Fibre Channel adapters having the SAN or the block I/O interface and a plurality of network channel adapters having the NAS or the file I/O interface. It is therefore possible to construct a storage system having high scalability and a high degree of freedom for its configuration." Matsunami '462 at col. 10, ll. 9–16. "The user can safely use the storage capacity of a storage system including the SAN and the NAS by exclusively controlling the storage areas. Therefore, by managing the storage capacity in a centralized fashion, an easily accessible environment can be provided, and the storage capacity can be optimally distributed. This resultantly reduces the system management and operation cost." Matsunami '462 at col. 10, ll. 23–29. "Description will be given of two modes in a case in which a single logical volume is shared between a Fibre Channel adapter 1110 and a network channel adapter 1100, namely, between a SAN and a NAS. The first mode is called "NAS over SAN". In this mode, for a file system created in a logical volume allocated to a network channel adapter 1100, a computer outside the storage system 1 sends a file access request via the LAN 20 to the channel adapter 1100. The computer having issued the request communicates data via the SAN 30. The second mode is called "backup via SAN". In this mode, a backup operation for data stored in a logical volume allocated to the network channel adapter 1100 to create a file system is conducted via a SAN connected to the Fibre Channel adapter 1110.

Claim Language	Exemplary Evidence of Anticipation and/or Obviousness
	These examples are associated with the SAN—SAN sharing, specifically, the sharing of a logical volume between computers. Therefore, the S-N sharing information 1317 of the intra-CH sharing information is used." Matsunami '462 at col. 11, ll. 29–47. "In FIG. 9, a logical volume 8 including the disk pool 6 (1), RG 17000 (2), and LDEV 170 (6 to 8) is defined as a logical volume shared between a computer associated with SAN and a computer associated with NAS. This can be seen from that a plurality of types of channel adapters are registered to the channel adapter number entry 1316." Matsunami '462 at col. 11, ll. 48–53. "The S-N sharing information entry 1317 corresponding to LV 8 contains information that disk pool 1 is R/W, RG 2 is R/W, and LV 8 is R/W. In the same RG 17000 of the same disk pool, the attribute of any logical volume other than LV8 has been changed to the P attribute. That is, the sharing is prohibited for such logical volumes. The R/W attribute is set to LDEV 170 not used, i.e., reserved. The sharing attribute is set to the disk pool 6 when the disk pool 6 is defined. The attribute is set to RG 17000 when RG 17000 is registered to the disk pool 6. The attribute is set to LV and LDEV when the volume allocation processing is executed. The user inputs specific setting information from the management terminal 18. The SAN—SAN (S—S) sharing information and the NAS—NAS (N—N) sharing information are also respectively set to the entries 1318 and 1319 in a similar way." Matsunami '462 at col. 11, ll. 54–69. "Since the NAS inherently includes the user management function, the embodiment can be easily applied to the NAS. By installing the user management function of this embodiment in the SAN, it is also similarly possible to implement the disk pool management and the volume allocation while guaranteeing the access security between the user classes. In the description of the embodiment, the access security between user classes is guaranteed in one channel adapter. However, it is also possible to implement an embodiment in which the configuration to share a volume between channel adapters as described above is combined with the configuration to guarantee the access security between user classes. That is, the storage system 1 provides a service in which the system 1 allows only a user of an appropriate user class to access a volume while the volume is shared between multiple channel adapters." Matsunami '462 at col. 13, ll. 1–16. "According to the present invention, there can be provided a storage system of which the storage capacity is easily managed." Matsunami '462 at col. 13, ll. 19–21.

Claim Language	Exemplary Evidence of Anticipation and/or Obviousness
4. The system of claim 1, wherein said system is part of a network attached storage (NAS) controller.	Matsunami ’462 teaches “[t]he system of claim 1, wherein said system is part of a network attached storage (NAS) controller,” including at least the following exemplary citations. For example, Matsunami ’462 teaches wherein said system is part of a network attached storage (NAS) controller, by disclosing, as non–limiting examples, a combined SAN/NAS controller. The combined SAN/NAS controller may be used in a NAS. *See, e.g.:* “A storage has NAS and SAN functions and a high degree of freedom to configure a system to reduce the management and operation cost. The storage includes a plurality of interface slots in which a plurality of interface controllers can be installed, a block I/O interface controller which has SAN functions and which can be installed in the slot, a file I/O interface controller which has NAS functions and which can be installed in the slots, a storage capacity pool including a plurality of disk devices accessible from the interface controllers, and a storage capacity pool controller to control the storage capacity pool.” Matsunami ’462 at Abstract. FIG. 1 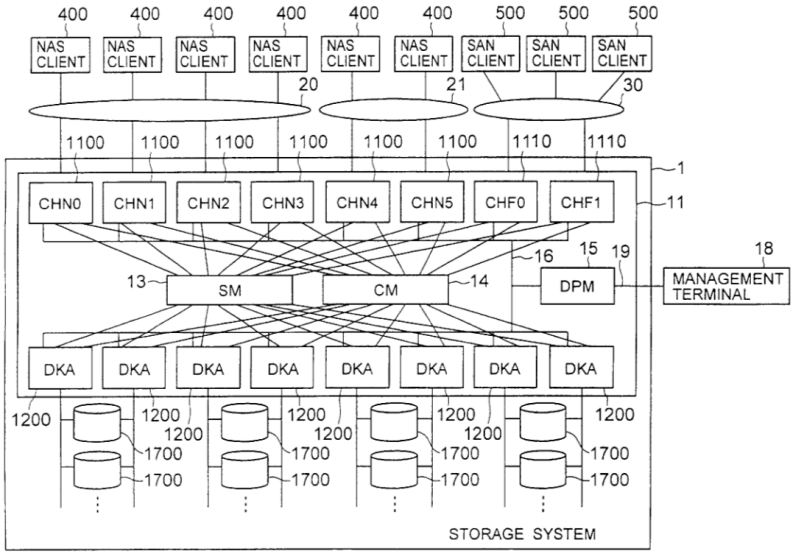 Matsunami ’462 at Figure 1.

Claim Language	Exemplary Evidence of Anticipation and/or Obviousness
	FIG. 4 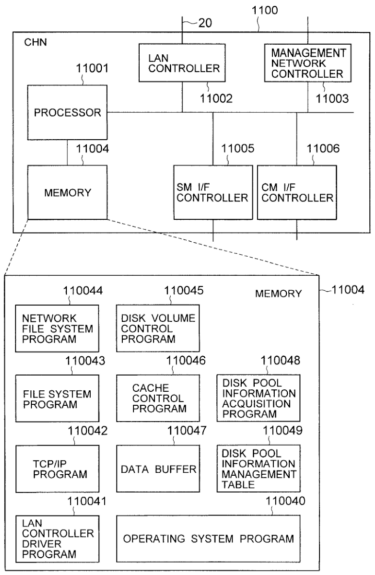 Matsunami ’462 at Figure 4.

Claim Language	Exemplary Evidence of Anticipation and/or Obviousness
	FIG. 10 13100 13101 13102 13103 SLOT ADDRESS | CHANNEL ADAPTER ID NO. | CHANNEL ADAPTER TYPE | STATE 0 | CHN100B0013 | CHN | NORMAL 1 | CN100B0059 | CHN | NORMAL 2 | CHN100B0153 | CHN | NORMAL 3 | CHN500A1936 | CHN | NORMAL 4 | CHN500A1940 | CHN | NORMAL 5 | CHN500A2002 | CHN | NORMAL 6 | CHF500A1234 | CHF | NORMAL 7 | CHF500A2199 | CHF | NORMAL 1310 CHANNEL ADAPTER MANAGEMENT TABLE Matsunami ’462 at Figure 10. “Second, a file I/O interface is used to conduct I/O operations between a storage system and a computer using a unit of files recognized by an application program executed by the computer. The file I/O interfaces uses, in many cases, a protocol of a network file system employed by a file server of the prior art. Particularly, an apparatus in which functions of the file server customized for the storage system are combined with the storage system is called a network attached storage (NAS). The NAS is directly connected to a local area network (LAN) and the like.” Matsunami ’462 at col. 1, ll. 24–35. “On the other hand, since the NAS can directly use an existing LAN, the installation cost thereof is lowered and the installation becomes easier. The NAS uses a standardized network file system and hence the NAS user can manage data in the unit of general files. Therefore, data can be easily managed and files can be easily shared among a plurality of computers. However, the NAS communicates data with computers via the LAN also used for communications between the computers. There exists risk that the load of the LAN is increased. Since the protocol processing used in the network file system has high overhead and hence the response time becomes longer as compared with the SAN. Therefore, the NAS is primarily used in a file management or control system of an enterprise for

Claim Language	Exemplary Evidence of Anticipation and/or Obviousness
	application to manage web contents, data files of computer aided design, and the like in many cases." Matsunami '462 at col. 1, ll. 51–67. "As above, the NAS and the SAN are complementary to each other and are applied to mutually different fields. Therefore, the NAS and the SAN are respectively used in appropriate fields." Matsunami '462 at col. 2, ll. 1–4. "When it is desired to construct a system including a SAN and a NAS according to the prior art, a NAS and a storage system having functions of the SAN are required. In this case, the user of the constructed system must separately manage or control the storage systems of different types. This results in a problem of increase in the cost for the management and operation, of the system. In the system including both the storage system having the NAS functions and the storage system having the SAN functions, the system user must manage the storage capacity for each storage system. Specifically, for each storage, the user must set an environment configuration and must manage its storage capacity. Consequently, there arises a problem that the management of the storage system becomes complex and difficult. Assume that the storage capacity of the storage system used by the SAN is insufficient in a system including the SAN and the NAS. In this situation, even if NAS has available or enough storage capacity, the user cannot freely use the storage capacity of the NAS because the respective storage systems are separately or differently managed. That is, there arises a problem that the user cannot efficiently use the total capacity of the overall system. It is therefore an object of the present invention to provide a storage system capable of reducing the management and operation cost for storage systems of a plurality of types." Matsunami '462 at col. 2, ll. 14–39. "The interface controllers of a plurality of types may include a block I/O interface controller having functions of a SAN and a file I/O interface controller having functions of a NAS." Matsunami '462 at col. 2, ll. 49–52. "The storage system 1 is connected via an LAN 20 and an LAN 21 to NAS clients 400. In the embodiment, each of the LAN 20 and 21 is an internet protocol (IP) network (to be simply referred to as a network hereinbelow). The storage system 1 is also connected via a SAN 30 to SAN clients 500. In the embodiment, the SAN 30 includes a Fibre Channel." Matsunami '462 at col. 3, ll. 28–33.

Claim Language	Exemplary Evidence of Anticipation and/or Obviousness
	"As above, the storage system 1 is a storage system including the SAN which includes the Fibre Channel and which uses the block I/O interface and the NAS which includes the IP networks and which uses the file I/O interface. That is, the storage system 1 includes different type interfaces. Any combination of the interface for SAN and the interface for NAS is available for the storage system 1. As one combination, the system 1 may be configured with the interface only for SAN or NAS." Matsunami '462 at col. 3, ll. 42–51. "The network channel adapter 1100 is an interface controller connected via the file I/O interface to NAS clients 400. The Fibre Channel adapter 1110 is an interface controller connected via the block I/O interface to SAN clients 500. The adapters 1100 and 1200 will be collectively referred to as channel adapters (CH) hereinbelow." Matsunami '462 at col. 3, ll. 60–65. "In the storage system 1, any channel adapter can access the cache memory 14 and all disks 1700. Such a configuration can be constructed using, for example, a crossbar switch." Matsunami '462 at col. 4, ll. 9–12. "FIG. 4 shows an internal configuration of the network channel adapter 1100. The adapter 1100 includes a processor 11001, an LAN controller 11002, a management network controller 11003, a memory 11004, an SM interface (I/F) controller 11005, and a CM I/F controller 11006. The processor 11001 controls overall operation of the adapter 1100. The LAN controller 11002 controls communication between the adapter and the LAN. The management network controller 11003 controls communication between the adapter 1100 and the management network 16. The memory 11004 connected to the processor 11001 stores programs to be executed by the processor 11001 and control data." Matsunami '462 at col. 4, ll. 55–67. "The network file system program 110044 controls the protocol of the network file system to supply files from the disks 1700 to the NAS clients 400. The disk volume control program 110045 controls accesses to disk volumes set to the disks 1700. The cache control program 110046 manages data stored in the cache memory 14 and controls to judge a data hit/miss condition and the like in the cache memory 14." Matsunami '462 at col. 5, ll. 20–26. "The table 1311 includes an entry 13110 for a number assigned to the disk pool 6, an entry 1311 for a number assigned to the RG 17000, an entry 1312 for a number assigned to the LDEV 170, an entry 1313 for information of the capacity of the LDEV 170, an entry 1314 for a number assigned to the logical volume (LV), a CN entry 1315 for a sequence number of the LDEV 170 of the LV, an entry 1316 for a number of a channel adapter to which an associated LV is assigned, and entry 1317 for an S-N sharing information

Claim Language	Exemplary Evidence of Anticipation and/or Obviousness
	indicating possibility of sharing of the channel adapter with respect to the disk pool 6, RG, and LV, namely, between SAN (CHF) and NAS (CHN); an entry 1318 for S—S sharing information indicating possibility of sharing between SAN adapters (CHFs), an entry 1319 for N—N sharing information indicating possibility of sharing between NAS adapters (CHNs), and an entry 1320 for user class sharing information. The sharing information between a plurality of CHs (to be referred to as intra-CH sharing information hereinbelow) and the like will be described later. The CN is a number indicating a sequence of connection when a plurality of LDEV 170 are connected to each other to create a logical volume." Matsunami '462 at col. 7, ll. 39–60. "The table 1310 includes an entry 13100 for an address of a channel adapter in the management network 16, the channel adapter being installed in the storage system 1, an entry 13101 for an identifier number of the channel adapter, an entry 13102 for information of a type of the channel adapter, and an entry 13103 for information of a state of operation of the channel adapter." Matsunami '462 at col. 8, ll. 6–12. "The recognition processing is applicable to any channel adapters regardless of the channel adapter types such as a network channel adapter 1100 and a Fibre Channel adapter 1110." Matsunami '462 at col. 9, ll. 64–67. "According to the embodiment, there can be implemented a storage system including an arbitrary combination of a plurality of Fibre Channel adapters having the SAN or the block I/O interface and a plurality of network channel adapters having the NAS or the file I/O interface. It is therefore possible to construct a storage system having high scalability and a high degree of freedom for its configuration." Matsunami '462 at col. 10, ll. 9–16. "The user can safely use the storage capacity of a storage system including the SAN and the NAS by exclusively controlling the storage areas. Therefore, by managing the storage capacity in a centralized fashion, an easily accessible environment can be provided, and the storage capacity can be optimally distributed. This resultantly reduces the system management and operation cost." Matsunami '462 at col. 10, ll. 23–29. "Description will be given of two modes in a case in which a single logical volume is shared between a Fibre Channel adapter 1110 and a network channel adapter 1100, namely, between a SAN and a NAS. The first mode is called "NAS over SAN". In this mode, for a file system created in a logical volume allocated to a network channel adapter 1100, a computer outside the storage system 1 sends a file access request via the LAN 20 to the channel adapter 1100. The computer having issued the request communicates data via the SAN 30.

Claim Language	Exemplary Evidence of Anticipation and/or Obviousness
	The second mode is called "backup via SAN". In this mode, a backup operation for data stored in a logical volume allocated to the network channel adapter 1100 to create a file system is conducted via a SAN connected to the Fibre Channel adapter 1110. These examples are associated with the SAN—SAN sharing, specifically, the sharing of a logical volume between computers. Therefore, the S-N sharing information 1317 of the intra-CH sharing information is used." Matsunami '462 at col. 11, ll. 29–47. "In FIG. 9, a logical volume 8 including the disk pool 6 (1), RG 17000 (2), and LDEV 170 (6 to 8) is defined as a logical volume shared between a computer associated with SAN and a computer associated with NAS. This can be seen from that a plurality of types of channel adapters are registered to the channel adapter number entry 1316." Matsunami '462 at col. 11, ll. 48–53. "The S-N sharing information entry 1317 corresponding to LV 8 contains information that disk pool 1 is R/W, RG 2 is R/W, and LV 8 is R/W. In the same RG 17000 of the same disk pool, the attribute of any logical volume other than LV8 has been changed to the P attribute. That is, the sharing is prohibited for such logical volumes. The R/W attribute is set to LDEV 170 not used, i.e., reserved. The sharing attribute is set to the disk pool 6 when the disk pool 6 is defined. The attribute is set to RG 17000 when RG 17000 is registered to the disk pool 6. The attribute is set to LV and LDEV when the volume allocation processing is executed. The user inputs specific setting information from the management terminal 18. The SAN—SAN (S—S) sharing information and the NAS—NAS (N—N) sharing information are also respectively set to the entries 1318 and 1319 in a similar way." Matsunami '462 at col. 11, ll. 54–69. "In the description of the embodiment, attributes having a plurality of levels are set to share a logical volume. Next, description will be given of further another embodiment of the present invention. In addition to the above attributes, an attribute having a plurality of levels is set to each user who accesses a logical volume. When a user desires to access the logical volume, the user is restricted according to the attribute level. In the description, the logical volume is shared between network attached storages (NAS)." Matsunami '462 at col. 12, ll. 1–9. "For the management of users, the storage system 1 must have a user class definition information table containing information for each user, for example, information indicating a name of group of one of the user

Claim Language	Exemplary Evidence of Anticipation and/or Obviousness
	classes 1 to 5 to which the user belongs. For each logical volume, the user information is registered to the user class definition table. Specifically, since the NAS includes a unit to manage users for each file system, the user must set user management information to the network channel adapter 1100. When the user information is set to the adapter 1100, the user class definition information table is generated." Matsunami '462 at col. 12, ll. 44–54. "Since the NAS inherently includes the user management function, the embodiment can be easily applied to the NAS. By installing the user management function of this embodiment in the SAN, it is also similarly possible to implement the disk pool management and the volume allocation while guaranteeing the access security between the user classes. In the description of the embodiment, the access security between user classes is guaranteed in one channel adapter. However, it is also possible to implement an embodiment in which the configuration to share a volume between channel adapters as described above is combined with the configuration to guarantee the access security between user classes. That is, the storage system 1 provides a service in which the system 1 allows only a user of an appropriate user class to access a volume while the volume is shared between multiple channel adapters." Matsunami '462 at col. 13, ll. 1–16. "According to the present invention, there can be provided a storage system of which the storage capacity is easily managed." Matsunami '462 at col. 13, ll. 19–21.
5. The system of claim 1, wherein said stored value is decremented by a predefined value prior to returning said stored value to said at least one second processing element.	
6. The system of claim 1, wherein at least one third processing element executes said command and notifies said output queue to issue said response.	

Exhibit 596-13

Claim Language	Exemplary Evidence of Anticipation and/or Obviousness
[7pre] A system for dividing and synchronizing a processing task across a plurality of processing elements comprising:	
[7a] an input queue implemented in hardware;	
[7b] an output queue implemented in hardware;	
[7c] a first processing element having access to said input queue and said output queue;	
[7d] at least one second processing element in communication with said input queue;	
[7e] a reservation register implemented in hardware storing a value indicative of available space in said input queue, said reservation register accessible by both said first processing element and said at least one second processing element;	
[7f] computer storage storing instructions, which when executed by said at least one second processing element:	

Claim Language	Exemplary Evidence of Anticipation and/or Obviousness
[7g] receives a command from said first processing element;	
[7h] accesses said reservation register and reads said stored value;	
[7i] determines when said read value indicates available space in said input queue to issue said command;	
[7j] issues said command to said input queue on behalf of said first processing element; and	
[7k] wherein said first processing element receives a response corresponding to said command from said output queue.	
8. The system of claim 7, wherein said input queue is a first-in-first-out (FIFO) buffer.	
9. The system of claim 7, wherein said system is part of a storage area network (SAN) controller.	Matsunami ’462 teaches “[t]he system of claim 7, wherein said system is part of a storage area network (SAN) controller,” including at least the following exemplary citations. *See* above at row 3.
10. The system of claim 7, wherein said system is part of a network attached storage (NAS) controller.	Matsunami ’462 teaches “[t]he system of claim 7, wherein said system is part of a network attached storage (NAS) controller,” including at least the following exemplary citations. *See* above at row 4.

Claim Language	Exemplary Evidence of Anticipation and/or Obviousness
11. The system of claim 7, wherein said stored value is decremented by a predefined value prior to returning said stored value to said at least one second processing element.	
12. The system of claim 7, wherein at least one third processing element executes said command and notifies said output queue to issue said response.	
[13pre] A system for dividing and synchronizing a processing task across a plurality of processing elements comprising:	
[13a] an input queue implemented in hardware;	
[13b] an output queue implemented in hardware;	
[13c] a first processing element having access to said input queue and said output queue;	
[13d] at least one second processing element in communication with said input queue and said output queue;	

Claim Language	Exemplary Evidence of Anticipation and/or Obviousness
[13e] a reservation register implemented in hardware storing a value indicative of available space in said input queue, said reservation register accessible by both said first processing element and said at least one second processing element;	
[13f] computer storage storing instructions, which when executed by said at least one second processing element:	
[13g] receives a command from said first processing element;	
[13h] accesses said reservation register and reads said stored value;	
[13i] determines when said read value indicates available space in said input queue to issue said command;	
[13j] issues said command to said input queue on behalf of said first processing element; and	
[13k] receives a response corresponding to said command from said output queue.	

Claim Language	Exemplary Evidence of Anticipation and/or Obviousness
14. The system of claim 13, wherein said input queue is a first-in-first-out (FIFO) buffer.	
15. The system of claim 13, wherein said system is either part of a storage area network (SAN) controller.	Matsunami ’462 teaches “[t]he system of claim 13, wherein said system is either part of a storage area network (SAN) controller,” including at least the following exemplary citations. *See* above at row 3.
16. The system of claim 13, wherein said system is part of a network attached storage (NAS) controller.	Matsunami ’462 teaches “[t]he system of claim 13, wherein said system is part of a network attached storage (NAS) controller,” including at least the following exemplary citations. *See* above at row 4.
17. The system of claim 13, wherein said stored value is decremented by a predefined value prior to returning said stored value to said at least one second processing element.	
18. The system of claim 13, wherein at least one third processing element executes said command and notifies said output queue to issue said response.	