US005766253A

United States Patent [19]

Brosnahan, III

[11] **Patent Number: 5,766,253**

[45] **Date of Patent: Jun. 16, 1998**

[54] **SPINAL FUSION DEVICE**

[75] Inventor: **Robert E. Brosnahan, III**, Germantown, Tenn.

[73] Assignee: **Surgical Dynamics, Inc.**, Norwalk, Conn.

[21] Appl. No.: **585,526**

[22] Filed: **Jan. 16, 1996**

[51] **Int. Cl.**[6] **A61F 2/44**

[52] **U.S. Cl.** **623/17**

[58] **Field of Search** 623/16, 17; 606/61

[56] **References Cited**

U.S. PATENT DOCUMENTS

4,501,269	2/1985	Bagby .	
4,536,894	8/1985	Galante et al.	623/22
4,655,777	4/1987	Dunn et al.	623/21
4,834,757	5/1989	Brantigan .	
4,878,915	11/1989	Brantigan	623/17
4,904,261	2/1990	Dove et al.	623/17
4,936,848	6/1990	Bagby .	
4,944,759	7/1990	Mallory et al.	623/18
4,961,740	10/1990	Ray et al. .	
5,015,247	5/1991	Michelson .	
5,026,373	6/1991	Ray et al. .	
5,055,104	10/1991	Ray .	
5,147,402	9/1992	Bohler et al. .	
5,192,327	3/1993	Brantigan .	
5,306,307	4/1994	Senter et al.	623/17
5,397,364	3/1995	Kozak et al. .	
5,423,816	6/1995	Lin .	
5,425,772	6/1995	Brantigan .	

FOREIGN PATENT DOCUMENTS

26 28 443 12/1976 Germany .

Primary Examiner—David Isabella

[57] **ABSTRACT**

An implant for insertion into at least one bore formed between opposing vertebrae of a spine where the vertebrae are separated by a space and each vertebrae has end plates. The implant is in the shape of a solid generally cylindrical body having a first and a second end, an outer surface, opposing sides and a longitudinal axis. The body has threads on a portion of the outer surface between the first and second ends with the threads being configured for threading into bone. The body includes at least two indentations on its outer surface with the indentations having a surface with each indentation containing a bone attachment material for the attachment of bone to the bone attachment material within the indentations. Each of the indentations are positioned on generally opposing sides of the body so as to provide contact with the end plates of the opposing vertebrae when the implant is inserted into at least one bore formed between the opposing vertebrae.

11 Claims, 3 Drawing Sheets

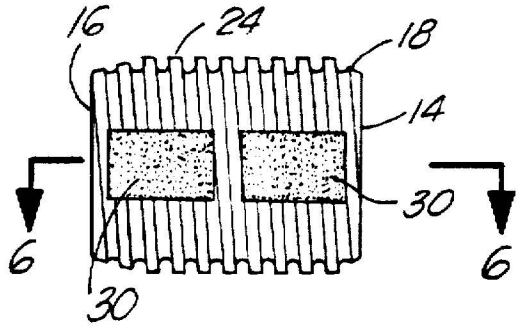

GLOBUS EX. 1015

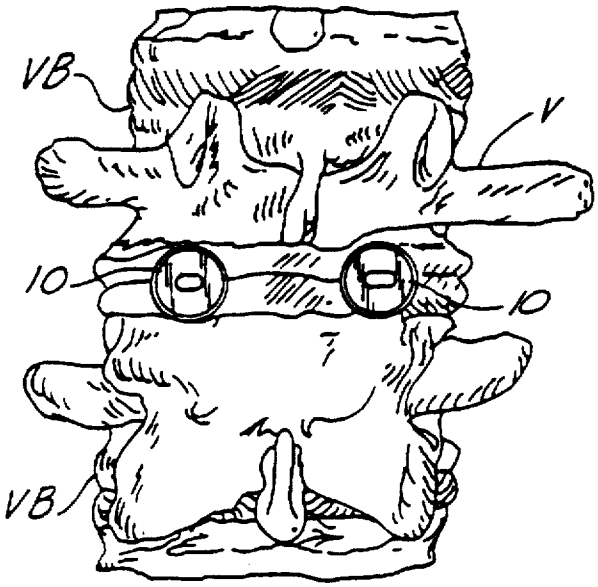

FIG. 1

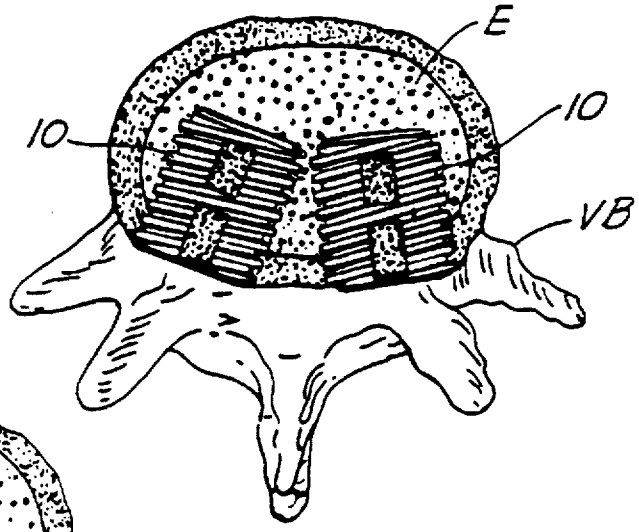

FIG. 2

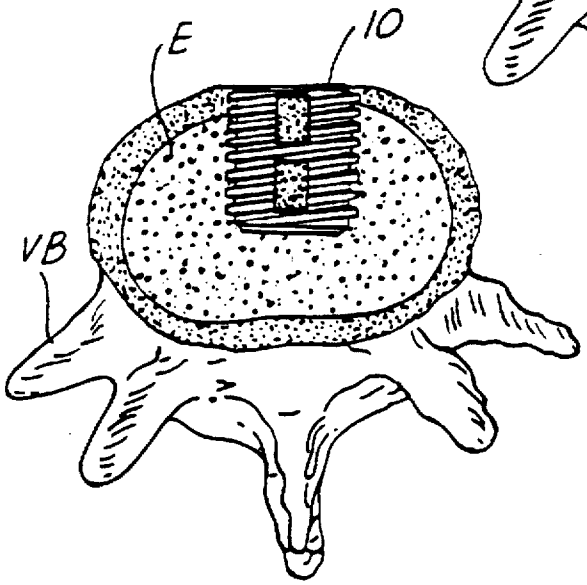

FIG. 3

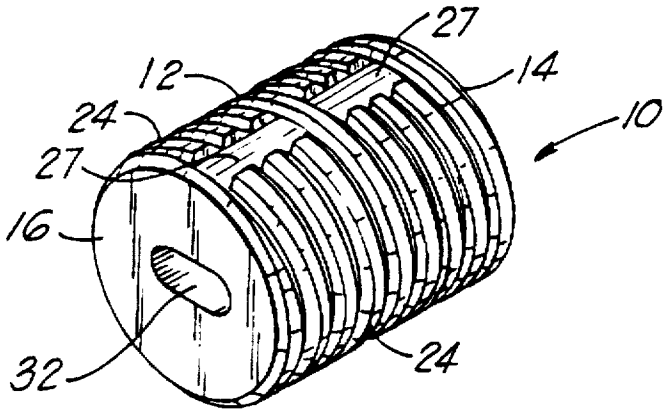

FIG. 4

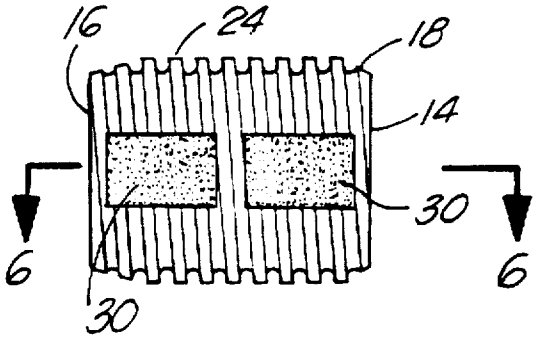

FIG. 5

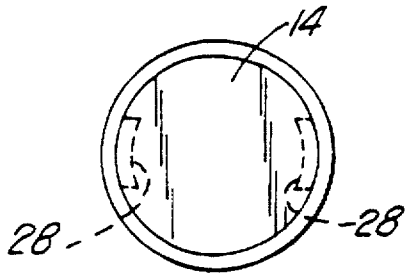

FIG. 7

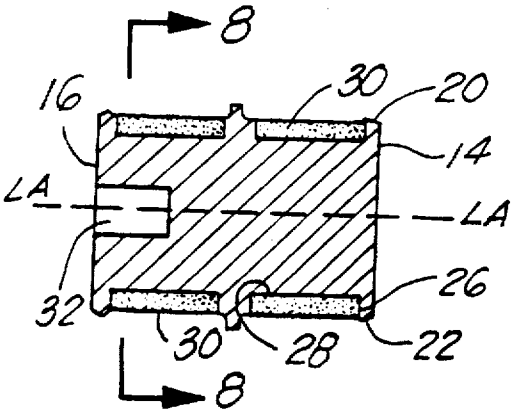

FIG. 6

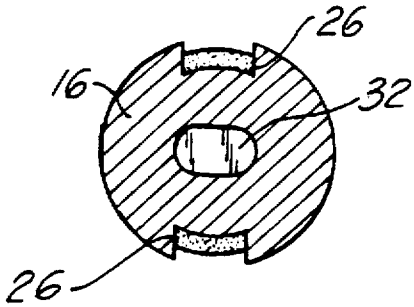

FIG. 8

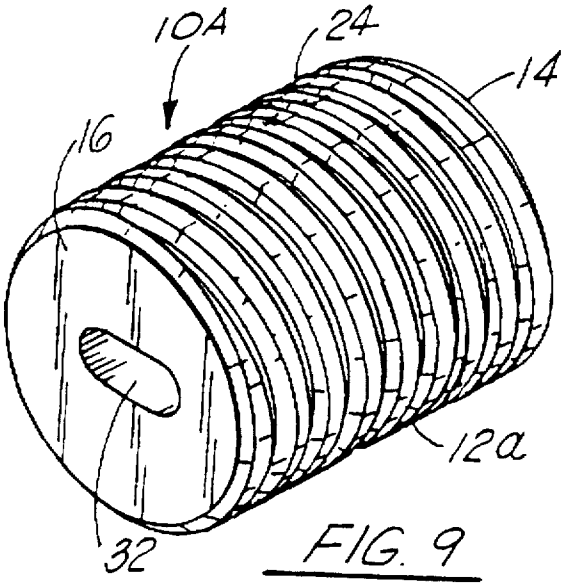

FIG. 9

SPINAL FUSION DEVICE

SPECIFICATION

1. Field of the Invention

The present invention relates to spinal fusion devices to be placed between opposing vertebrae of a spine and more specifically to solid spinal fusion devices for insertion into bores formed between opposing vertebrae of a spine, the device being constructed so as to allow bony attachment while maintaining a load-bearing strength in excess of loads required by the spine.

2. Background of the Invention

In a human spine the intervertebral disc acts as a stabilizer and as a mechanism for force distribution between the vertebral bodies. When the intervertebral disc is not present, the intervertebral space collapses causing pain, abnormal joint mechanics and premature development of arthritic changes.

Methods of treating injured or diseased discs have included chemical disintegration procedures and surgical excision, often followed by bony fusion to prevent spinal collapse or instability. With disc excision, no significant regeneration of disc material occurs. Replacement of an injured disc in an otherwise healthy spine may prevent arthritic changes and may stabilize the spinal segments. In diseased spines, replacement of the disc may reduce the progression of the disease process and may provide pain relief. Several methods have been developed for providing stability, via internal fixation, for the purpose of improving the probability, rate, and time associated with spinal fusion.

Methods of achieving internal fixation include the use of rods, plates and interbody cages. Examples of interbody cages are found in U.S. Pat. Nos. 4,961,740, 5,015,247 and 5,425,772. The cages or fusion devices described in these patents have threaded hollow bodies, which allow for the packing of autologous bone grafts. Typically, interbody cages are filled with bone graft material, either autograft or allograft, in order to enhance long term fixation of the interbody cage via bone attachment to the opposing vertebral end plates through the cage. Bone grafting is associated with a statistical chance of post-operative complications. The exact nature of these complications is generally related to the source of the graft material, but includes harvest site pain and immunological responses. Bone used as graft implants is often removed from another portion of a patient's body, which is called an autograft. A significant advantage of using a patient's own bone is the avoidance of tissue rejection, but harvesting bone also has its shortcomings. There is a risk to the patient in having a second surgical procedure (bone harvesting) performed at a secondary site which can lead to infection or additional pain to the patient. Further, the bone harvesting site is weakened by the removal of the bone. Other options for a bone graft source is bone removed from cadavers, called allograft, or from an animal called xenograft. While these kinds of bone grafts relieve the patient of having a secondary surgical site as a possible source of infection or pain, this option carries a high incidence of graft rejection and an increased risk of the transmission of communicable diseases. Further, xenograft and allograft material are more slowly incorporated into a patient's body than autograft material.

In these devices long term fixation is attempted via bone "throughgrowth," in which existing bone tissue replaces the graft material. However, due to the relative stiffness of the cage portion of these devices, it is extremely doubtful that the bone within the cage remains viable over the long term as this mechanically unloaded bone would be reabsorbed, leaving only fixation via the external threads on the cage.

Another spinal fusion device, described in U.S. Pat. No. 4,878,915, is a solid plug implant with roughened outer surfaces for receiving bone ingrowth in order to fuse the plugs in the intervertebral space. The roughened outer surface on this device allows for only attachment of the device through interdigitation of the bone with the roughened outer surface of the plug.

Accordingly, it is an object of this invention to provide a spinal fusion device for fusing adjacent vertebral bodies without the need to use bone graft material. Another object of the invention is to provide for internal fixation/stabilization of the vertebrae to be fused through the use of a solid threaded device which has indentations in its outer surface containing osteoconductive material that contacts the bony end plates of the vertebral bodies to be fused. Yet another object is to provide a spinal fusion device that does not require bone growth into a hollow center of the device in order to augment the threaded fixation mechanism on the outer surface of the fusion device.

SUMMARY OF THE INVENTION

The present invention provides an implant for insertion into at least one bore formed between opposing vertebrae of a spine where the vertebrae are separated by a space. The implant is a solid cylindrical body having a first and a second end, an outer surface, opposing sides and a longitudinal axis. The body has threads on a portion of the outer surface between the first and second ends with the threads being configured for threading into bone tissue. The body includes at least two indentations on its outer surface, with each indentation containing bone attachment material for the attachment of bone to the material within the indentations. Each of the indentations are positioned on generally opposing sides of the body so as to be in contact with the bony end plates of the vertebral bodies to be fused.

As will subsequently be described, the inventive implant provides a spinal fusion device that does not require bone graft material in order to provide long term fixation or to augment the threaded fixation mechanism of the fusion device.

BRIEF DESCRIPTION OF THE DRAWINGS

A better understanding of the invention can be obtained when the detailed description of the exemplary embodiments set forth below is reviewed in conjunction with the accompanying drawings, in which:

FIG. **1** is a schematic posterior plan view of a portion of human vertebrae with an implanted spinal fusion device of the present invention;

FIG. **2** is a schematic top view of a human vertebrae with two posteriorly implanted fusion devices of the present invention;

FIG. **3** is a schematic top plan view of a human vertebrae showing an anteriorly implanted fusion device of the present invention;

FIG. **4** is a perspective view of the present invention;

FIG. **5** is a top plan view of the fusion device of FIG. **4**;

FIG. **6** is a cross-sectional view of the fusion device of FIG. **5**;

FIG. **7** is a plan view of a first end of the fusion device of FIG. **4**;

FIG. **8** is a plan view of a second end of the fusion device of FIG. **4**; and

FIG. 9 is a perspective view of an alternate embodiment of the present invention.

DETAILED DESCRIPTION OF PREFERRED EMBODIMENT

The human spine is composed of a column of vertebrae and their joining structures. The vertebrae V are connected by intervertebral discs, which are positioned between opposing faces of adjacent vertebral bodies VB. Each vertebral body VB has an end plate E that is adjacent to the connecting intervertebral disc. When problems with the spine occur, surgery may be required to correct the problem and in one such procedure called a discectomy, the involved vertebral bodies are exposed and all or a part of the intervertebral disc is removed. A second procedure, termed a spinal fusion, may then be required to fuse the vertebral bodies together in order to prevent movement and to maintain the space originally occupied by the intervertebral disc. In some cases, one or two spinal fusion devices are inserted into the intervertebral space during a spinal fusion procedure following a discectomy, .

FIGS. **1** and **2** illustrate vertebral bodies VB in which a fusion device or implant **10** of the present invention has been inserted into each bore formed between the posterior portion of opposing vertebral bodies VB of a spine. Alternatively, one or more fusion device or implant **10** may be inserted between an anterior portion of opposing vertebral bodies VB of a spine, as illustrated in FIG. **3**. As shown in FIGS. **4**, **5** and **6**, the fusion device **10** of the present invention is in the shape of a solid generally cylindrical body **12** which has a first or leading end **14** and a second or trailing end **16**. Body **12** includes an outer surface **18** and opposing sides **20**, **22**. Threading **24** is on a portion of the outer surface **18** of the body **12** between the first and second ends **14**, **16**. Preferably, the threading **24** is a cancellous type bone thread with buttressing on one side of the threading **24** which resists body **12** from backing out of the bore. Threading **24** is spirally wound around and is integral with the body **12**. Body **12** also includes at least two indentations **26** on its outer surface **18** positioned along the longitudinal axis LA on generally opposing sides **20**, **22** of the body **12**. Indentations **26** have a surface **28** and in a preferred embodiment are generally about 0.25 to 3.0 mm deep. Each indentation **26** contains a bone attachment material **27** which allows for the attachment of bone to the material **27** contained within the indentations **26**. In a preferred embodiment, the indentations **26** are generally rectangular in shape. Preferably, indentations **26** are positioned such that two indentations **26** are placed end-to-end along the longitudinal axis LA of each opposing side **20**, **22** of the body **12** for a total of four indentations **26**. However, indentations **26** can be positioned such that one rectangular indentation **26** that is generally the length of the body **12** is placed long the longitudinal axis LA of each opposing side **20**, **22** of the body **12**. This placement of indentations **26** provides for contact between the bone attachment material **27** and the end plates E of the opposing vertebral bodies VB when implant **10** is inserted into at least one bore formed between the opposing vertebral bodies VB as illustrated in FIGS. **2** and **3**.

In one embodiment of the fusion device **10**, the bone attachment material **27** includes an insert **30** formed from a biocompatible, porous, osteoconductive material. The porous material can include metallics, ceramics, polymers and composite materials. In a preferred embodiment the ceramic material is a hydroxylapatite such as a calcium hydroxylapatite. In another embodiment of the fusion device **10**, the bone attachment material **27** includes a metallic porous coating (not shown) on the surfaces **28** of the indentations **26**. Insert **30** can also be formed from an inductive material such as bioactive glass(es) or BMP which may be combined with or carried by bioresorbable polymer (s). An osteoconductive material such as hydroxylapatite enhances bone growth in areas where bone tissue is normally found. An inductive material such as bioactive glass (es) or BMP which may be combined with bioresorbable polymer(s) stimulates bone formation where bone tissue is not likely to be found.

Fusion device **10** also includes a centrally located internal opening **32** at the second end **16** of the body **12**, as illustrated in FIGS. **4**, **6** and **8**. The centrally located internal opening **32** is configured to receive a tool receiving and mounting device (not shown) for securing the body **12** to a tool, such as a screwdriver, used to insert the implant **10** into at least one bore formed between opposing vertebral bodies VB of a spine.

Fusion device **10** can be implanted in either the anterior or posterior portion of a vertebrae V and either one or two fusion devices **10** may be used to provide for internal fixation and stabilization of the vertebrae V during a surgical procedure to fuse adjoining vertebral bodies (FIGS. **2** and **3**). Inserts **30** can be formed from an osteoconductive or osteoinductive material and the solid cylindrical body **12** is preferably formed from an implantable grade material such as metals, ceramics, polymers or composites. Long term, the bone attachment material **27** in the indentations **26** obliviates the need for bone graft material as the bone tissue of the end plates E will become fixed directly to the bone attachment material **27**. Threading **24** on the outer surface **18** of the body **12** provides initial attachment to the vertebral bodies against the natural shear forces placed on the spine. Without the initial attachment providing by the threading **24**, it is possible for these shear forces to cause micromotion at the bone/bone attachment material **27** interface. This micromotion tends to reduce the integration of the bone attachment material **27** to the vertebral end plates E.

In an alternate embodiment, as shown in FIG. **9**, fusion device **10A** has a solid cylindrical body **12*a*** formed from a biocompatible osteoconductive material such as bioactive hydroxyapatite-polymer composites.As is known in the art, osteoconductive material can be either dense or porous. Body **12*a*** is preferably composed of a hydroxylapatite (HA) reinforced polyethylene composite. Cortical bone at the ultra-structural level is a hydroxylapatite reinforced collagen composite. Thus, the equivalence of microstructure and deformation behavior give hydroxylapatite-polyethylene composites a special property as a bone analogue material. HA reinforced polyethylene composites offer the potential of a stable implant-tissue interface during physiological loading. In addition to the ability to tailor-make the composition of the composite as to the mean particle size and the particle size distribution, as well as the surface area, the composition of the HA can be varied, so as to produce different mechanical properties. The body **12*a*** has a first and a second end **14**, **16**, opposing sides **20**, **22** and an outer surface **18**. Threading **24** is on a portion of the outer surface **18** between the first and second ends **14**, **16**. When the implant **10A** is inserted into at least one bore formed between the opposing vertebral bodies VB, the opposing sides **20**, **22** contact the end plates E of the opposing vertebral bodies VB so as to allow the bone tissue of the end plates E to chemically bond directly to the outer surface **18** of the body **12*a***. The implant **10A** also includes an internal opening **32** configured to receive a tool receiving and mounting device such as a screwdriver used for inserting the implant **10A** into at least one bore formed between opposing vertebrae of the spine.

It will be appreciated that implant **10** and **10**A are intended for use in a wide variety of vertebral body sizes and the dimensions of the implant **10** and **10**A will vary necessarily with the size of the vertebral body in which the implant **10**, **10**A is to be used. Making variations to the dimensions and sizes of the implant **10** and **10**A in order to accommodate differing sizes of vertebral bodies will be well within the skill of the art. Generally, however, the diameter of implant **10** and **10**A can be between about 6 to 20 mm and the length between about 8 to 30 mm.

Although the present invention has been described with reference to its preferred embodiments, those skilled in the art will recognize changes which may be made in form or structure which do not depart from the spirit of the invention already described in the Specification and embodied in the claims which follow.

What is claimed is:

1. An implant for insertion into a bore formed between opposing vertebrae of a spine during a spinal fusion surgical procedure, where the vertebrae are separated by a space and each vertebrae has end plates, the implant comprising:

a) a solid generally cylindrical implant body having a first and a second end, an outer surface, opposing sides and a longitudinal axis;

b) the implant body having threads on a portion of the outer surface extending between the first and second ends and defining a thread diameter, the threads being configured for threading into bone of the opposing vertebrae so that an end plate of a first of the vertebrae defines a bone contact surface with the implant body at a first position and an end plate of a second of the vertebrae defines a bone contact surface with the body at a second position, and wherein the opposing vertebrae load the threads of the cylindrical body with compression at the first and second positions;

c) the implant body including two opposed indentations on said outer surface, each of the indentations having respective surfaces that include parallel portions, with each indentation containing a biocompatable porous bone attachment material for the attachment of bone to the said bone attachment material within the indentations, the opposed indentations being spaced apart a distance closer together than the thread diameter along their length; and

d) each of the indentations being positioned on generally opposing sides of the body at said first and second positions so as to provide contact with the end plates of the opposing vertebrae when the implant is inserted into said bore formed between the opposing vertebrae and loaded with compression, whereby providing long term fixation of the opposing vertebrae after the spinal fusion procedure.

2. The implant of claim **1**, wherein the body includes four generally rectangular indentations.

3. The implant of claim **1**, wherein the indentations are about between 0.25 to 3.0 mm deep.

4. The implant of claim **1**, wherein the bone attachment material includes an insert formed from a biocompatible porous material.

5. The implant of claim **4**, wherein the porous material is selected from a group consisting of biocompatible metallics, ceramics, polymers, and composite materials.

6. The implant of claim **5**, wherein the ceramic material is a hydroxylapatite.

7. The implant of claim **6**, wherein the hydroxylapatite is a calcium hydroxylapatite.

8. The implant of claim **4**, wherein the bone attachment material includes an inductive material formed from a group consisting of bioactive glass(es) and BMP.

9. The implant of claim **1**, wherein the bone attachment material includes a metallic porous coating on the surfaces of the indentations.

10. The implant of claim **1**, wherein two implants are inserted into two bores formed between opposing vertebrae of a spine.

11. The implant of claim **1**, wherein the second end of the body has a centrally located internal opening configured to receive a tool receiving and mounting device for securing the body to a tool for inserting the implant into at least one bore formed between opposing vertebrae of a spine.

* * * * *