US009358127B2

(12) **United States Patent**
Duffield et al.

(10) **Patent No.: US 9,358,127 B2**
(45) **Date of Patent: Jun. 7, 2016**

(54) **INTERVERTEBRAL FUSION IMPLANT**

(75) Inventors: **William E. Duffield**, Collegeville, PA (US); **Colm McLaughlin**, Philadelphia, PA (US); **Jason Gray**, East Greenville, PA (US); **Jamie Calverley**, Drexel Hill, PA (US); **Mark Adams**, Honey Brook, PA (US); **William S. Rhoda**, Media, PA (US)

(73) Assignee: **Globus Medical, Inc.**, Audubon, PA (US)

(*) Notice: Subject to any disclaimer, the term of this patent is extended or adjusted under 35 U.S.C. 154(b) by 0 days.

(21) Appl. No.: **13/363,539**

(22) Filed: **Feb. 1, 2012**

(65) **Prior Publication Data**

US 2012/0130496 A1 May 24, 2012

Related U.S. Application Data

(63) Continuation of application No. 12/202,690, filed on Sep. 2, 2008, now Pat. No. 8,328,872.

(51) **Int. Cl.**

A61F 2/44	(2006.01)
A61F 2/46	(2006.01)
A61F 2/30	(2006.01)

(52) **U.S. Cl.**

CPC ***A61F 2/447*** (2013.01); ***A61F 2/4455*** (2013.01); *A61F 2/442* (2013.01); *A61F 2/4684* (2013.01); *A61F 2002/30004* (2013.01); *A61F 2002/3008* (2013.01); *A61F 2002/30383* (2013.01); *A61F 2002/30433* (2013.01); *A61F 2002/30436* (2013.01); *A61F 2002/30492* (2013.01);

(Continued)

(58) **Field of Classification Search**

USPC 623/17.11–17.16

See application file for complete search history.

(56) **References Cited**

U.S. PATENT DOCUMENTS

1,673,630	A	6/1928	Madge
4,349,921	A	9/1982	Kuntz

(Continued)

FOREIGN PATENT DOCUMENTS

FR	2727003	A1	5/1996
WO	9723175	A1	7/1997

(Continued)

OTHER PUBLICATIONS

Guidance Document: Intervertebral Body Fusion Device, U.S. Dept of Health and Human Services, Food and Drug Administration (Jun. 12, 2007).

(Continued)

Primary Examiner — Nicholas Woodall

(57) **ABSTRACT**

The present invention provides an intervertebral implant for implantation in a treated area of an intervertebral space between vertebral bodies of a spine. The implant includes a spacer portion having an inferior and superior surface, wherein the inferior and superior surfaces each have a contact area capable of engaging with anatomy in the treated area, and the inferior and superior surfaces define a through-hole extending through the spacer body. The present invention further provides screw holes extending from a side portion to the inferior and superior surfaces of the spacer portion and a plate portion rigidly coupled to the spacer portion through a coupling means, wherein the plate portion contains screws holes for receiving screws. A screw back out prevention mechanism adapted on the plate portion and prevents the back out of screws from the screw holes.

11 Claims, 6 Drawing Sheets

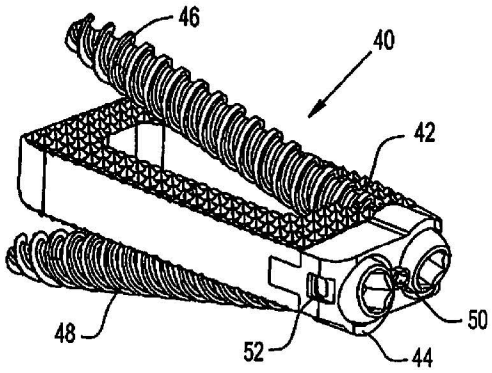

GLOBUS EX. 1017

(52) **U.S. Cl.**
CPC *A61F2002/30517* (2013.01); *A61F 2002/30604* (2013.01); *A61F 2002/30787* (2013.01); *A61F 2002/30794* (2013.01); *A61F 2002/30843* (2013.01); *A61F 2002/4475* (2013.01); *A61F 2220/0025* (2013.01); *A61F 2220/0041* (2013.01); *A61F 2250/0014* (2013.01); *A61F 2250/0098* (2013.01); *A61F 2310/00023* (2013.01)

(56) **References Cited**

U.S. PATENT DOCUMENTS

4,599,086	A	7/1986	Doty
4,743,256	A	5/1988	Brantigan
4,834,757	A	5/1989	Brantigan
4,904,261	A	2/1990	Dove et al.
4,917,704	A	4/1990	Frey
4,955,908	A	9/1990	Frey
5,002,576	A	3/1991	Fuhrmann et al.
5,163,949	A	11/1992	Bonutti
5,163,960	A	11/1992	Bonutti
5,197,971	A	3/1993	Bonutti
5,269,785	A	12/1993	Bonutti
5,295,994	A	3/1994	Bonutti
5,329,846	A	7/1994	Bonutti
5,331,975	A	7/1994	Bonutti
5,345,927	A	9/1994	Bonutti
5,364,399	A	11/1994	Lowery et al.
5,397,364	A	3/1995	Kozak et al.
5,403,317	A	4/1995	Bonutti
5,403,348	A	4/1995	Bonutti
5,441,538	A	8/1995	Bonutti
5,454,365	A	10/1995	Bonutti
5,458,641	A	10/1995	Jiminez
5,464,426	A	11/1995	Bonutti
5,496,348	A	3/1996	Bonutti
5,514,153	A	5/1996	Bonutti
5,514,180	A	5/1996	Heggeness
5,522,846	A	6/1996	Bonutti
5,527,343	A	6/1996	Bonutti
5,534,012	A	7/1996	Bonutti
5,545,222	A	8/1996	Bonutti
5,549,612	A	8/1996	Yapp et al.
5,549,630	A	8/1996	Bonutti
5,549,631	A	8/1996	Bonutti
5,569,305	A	10/1996	Bonutti
5,577,517	A	11/1996	Bonutti
5,584,862	A	12/1996	Bonutti
5,593,425	A	1/1997	Bonutti
5,624,462	A	4/1997	Bonutti
5,645,596	A	7/1997	Kim et al.
5,662,710	A	9/1997	Bonutti
5,667,520	A	9/1997	Bonutti
5,685,826	A	11/1997	Bonutti
5,694,951	A	12/1997	Bonutti
5,707,390	A	1/1998	Bonutti
5,716,325	A	2/1998	Bonutti
5,733,306	A	3/1998	Bonutti
5,735,875	A	4/1998	Bonutti
5,827,318	A	10/1998	Bonutti
5,845,645	A	12/1998	Bonutti
5,860,997	A	1/1999	Bonutti
5,861,041	A	1/1999	Tienboon
5,888,196	A	3/1999	Bonutti
5,888,219	A	3/1999	Bonutti
5,888,223	A	3/1999	Bray, Jr.
5,928,267	A	7/1999	Bonutti
5,935,131	A	8/1999	Bonutti
5,941,900	A	8/1999	Bonutti
5,954,739	A	9/1999	Bonutti
6,010,525	A	1/2000	Bonutti
6,017,305	A	1/2000	Bonutti
6,042,596	A	3/2000	Bonutti
6,045,579	A	4/2000	Hochshuler
6,059,817	A	5/2000	Bonutti
6,066,175	A	5/2000	Henderson et al.
6,077,292	A	6/2000	Bonutti
6,086,593	A	7/2000	Bonutti
6,099,531	A	8/2000	Bonutti
6,102,928	A	8/2000	Bonutti
6,132,472	A	10/2000	Bonutti
RE36,974	E	11/2000	Bonutti
6,146,421	A	11/2000	Gordon
6,156,037	A	12/2000	LeHuec et al.
6,159,234	A	12/2000	Bonutti
6,171,236	B1	1/2001	Bonutti
6,171,299	B1	1/2001	Bonutti
6,174,313	B1	1/2001	Bonutti
6,187,023	B1	2/2001	Bonutti
6,200,347	B1	3/2001	Anderson et al.
6,203,565	B1	3/2001	Bonutti
6,206,922	B1	3/2001	Zdeblick et al.
6,217,617	B1	4/2001	Bonutti
6,231,592	B1	5/2001	Bonutti
6,231,610	B1	5/2001	Geisler
6,235,059	B1	5/2001	Benezech
6,258,089	B1	7/2001	Campbell et al.
6,277,136	B1	8/2001	Bonutti
6,287,325	B1	9/2001	Bonutti
6,342,074	B1	1/2002	Simpson
6,358,266	B1	3/2002	Bonutti
6,361,565	B1	3/2002	Bonutti
6,364,880	B1	4/2002	Michelson
6,368,343	B1	4/2002	Bonutti
6,383,186	B1	5/2002	Michelson
6,425,920	B1	7/2002	Hamada
6,432,106	B1	8/2002	Fraser
6,447,516	B1	9/2002	Bonutti
6,451,042	B1	9/2002	Bonutti
6,464,713	B2	10/2002	Bonutti
6,468,289	B1	10/2002	Bonutti
6,468,293	B2	10/2002	Bonutti
6,471,724	B2	10/2002	Zdeblick
6,475,230	B1	11/2002	Bonutti
6,482,233	B1	11/2002	Aebi
6,500,195	B2	12/2002	Bonutti
6,503,267	B2	1/2003	Bonutti
6,503,277	B2	1/2003	Bonutti
6,520,993	B2	2/2003	James
6,540,785	B1	4/2003	Gill et al.
6,543,455	B2	4/2003	Bonutti
6,558,387	B2	5/2003	Errico
6,558,423	B1	5/2003	Michelson
6,558,424	B2	5/2003	Thalgott
6,562,073	B2	5/2003	Foley
6,569,187	B1	5/2003	Bonutti
6,575,982	B1	6/2003	Bonutti
6,585,750	B2	7/2003	Bonutti
6,592,531	B2	7/2003	Bonutti
6,592,609	B1	7/2003	Bonutti
6,607,534	B2	8/2003	Bonutti
6,620,181	B1	9/2003	Bonutti
6,629,998	B1	10/2003	Lin
6,630,000	B1	10/2003	Bonutti
6,635,073	B2	10/2003	Bonutti
6,638,309	B2	10/2003	Bonutti
6,652,532	B2	11/2003	Bonutti
6,666,889	B1	12/2003	Commarmond
6,682,563	B2	1/2004	Scharf
6,702,821	B2	3/2004	Bonutti
6,702,856	B2	3/2004	Bonutti
6,709,458	B2	3/2004	Michelson
6,719,803	B2	4/2004	Bonutti
6,730,127	B2	5/2004	Michelson
6,736,853	B2	5/2004	Bonutti
6,740,118	B2	5/2004	Eisermann et al.
6,770,078	B2	8/2004	Bonutti
6,776,938	B2	8/2004	Bonutti
6,793,658	B2	9/2004	Lehuec
6,805,714	B2	10/2004	Sutcliffe
6,827,740	B1	12/2004	Michelson
6,835,198	B2	12/2004	Bonutti
6,835,206	B2	12/2004	Jackson
6,849,093	B2	2/2005	Michelson

(56) **References Cited**

U.S. PATENT DOCUMENTS

6,860,885	B2	3/2005	Bonutti
6,860,904	B2	3/2005	Bonutti
6,887,272	B2	5/2005	Shinomiya
6,899,735	B2	5/2005	Coates et al.
6,905,517	B2	6/2005	Bonutti
6,908,466	B1	6/2005	Bonutti
6,932,835	B2	8/2005	Bonutti
6,972,019	B2	12/2005	Michelson
6,989,029	B2	1/2006	Bonutti
6,990,982	B1	1/2006	Bonutti
7,001,432	B2	2/2006	Keller et al.
7,025,787	B2	4/2006	Bryan et al.
7,044,972	B2	5/2006	Mathys, Jr.
7,048,755	B2	5/2006	Bonutti
7,070,557	B2	7/2006	Bonutti
7,087,073	B2	8/2006	Bonutti
7,094,251	B2	8/2006	Bonutti
7,104,996	B2	9/2006	Bonutti
7,114,500	B2	10/2006	Bonutti
7,128,753	B1	10/2006	Bonutti
7,134,437	B2	11/2006	Bonutti
7,137,997	B2	11/2006	Paul
7,147,652	B2	12/2006	Bonutti
7,147,665	B1	12/2006	Bryan et al.
7,153,325	B2	12/2006	Kim et al.
7,163,561	B2	1/2007	Michelson
7,172,627	B2	2/2007	Fiere et al.
7,192,447	B2	3/2007	Rhoda
7,208,013	B1	4/2007	Bonutti
7,217,273	B2	5/2007	Bonutti
7,217,290	B2	5/2007	Bonutti
7,232,464	B2	6/2007	Mathieu et al.
7,238,203	B2	7/2007	Bagga et al.
7,276,082	B2	10/2007	Zdeblick et al.
7,309,357	B2	12/2007	Kim
7,311,719	B2	12/2007	Bonutti
7,320,708	B1	1/2008	Bernstein
7,329,263	B2	2/2008	Bonutti
7,429,266	B2	9/2008	Bonutti
7,462,200	B2	12/2008	Bonutti
7,481,831	B2	1/2009	Bonutti
7,510,557	B1	3/2009	Bonutti
7,594,931	B2	9/2009	Louis et al.
7,615,054	B1	11/2009	Bonutti
7,618,456	B2	11/2009	Mathieu et al.
7,635,390	B1	12/2009	Bonutti
7,708,740	B1	5/2010	Bonutti
7,708,741	B1	5/2010	Bonutti
7,727,283	B2	6/2010	Bonutti
7,749,229	B1	7/2010	Bonutti
7,771,475	B2	8/2010	Michelson
7,780,670	B2	8/2010	Bonutti
7,794,502	B2	9/2010	Michelson
7,806,896	B1	10/2010	Bonutti
7,806,897	B1	10/2010	Bonutti
7,828,852	B2	11/2010	Bonutti
7,837,736	B2	11/2010	Bonutti
7,846,207	B2	12/2010	Lechmann et al.
7,850,731	B2	12/2010	Brittain
7,854,750	B2	12/2010	Bonutti
7,862,616	B2	1/2011	Lechmann et al.
7,875,076	B2	1/2011	Mathieu et al.
7,879,072	B2	2/2011	Bonutti
7,892,236	B1	2/2011	Bonutti
7,892,261	B2	2/2011	Bonutti
7,896,880	B2	3/2011	Bonutti
7,931,690	B1	4/2011	Bonutti
7,959,635	B1	6/2011	Bonutti
7,972,381	B2	7/2011	Michelson
8,100,976	B2	1/2012	Bray et al.
8,105,383	B2	1/2012	Michelson
8,114,162	B1	2/2012	Bradley
8,128,669	B2	3/2012	Bonutti
8,133,229	B1	3/2012	Bonutti
8,137,405	B2	3/2012	Kostuik et al.
8,162,977	B2	4/2012	Bonutti
8,216,312	B2	7/2012	Gray
8,268,000	B2	9/2012	Waugh et al.
8,323,343	B2	12/2012	Michelson
8,328,872	B2	12/2012	Duffield et al.
8,343,222	B2	1/2013	Cope
8,425,522	B2	4/2013	Bonutti
8,425,607	B2	4/2013	Waugh et al.
8,439,977	B2	5/2013	Kostuik et al.
8,486,066	B2	7/2013	Bonutti
8,623,030	B2	1/2014	Bonutti
8,632,552	B2	1/2014	Bonutti
8,641,726	B2	2/2014	Bonutti
8,690,944	B2	4/2014	Bonutti
8,739,797	B2	6/2014	Bonutti
8,747,439	B2	6/2014	Bonutti
8,784,495	B2	7/2014	Bonutti
8,795,363	B2	8/2014	Bonutti
8,814,902	B2	8/2014	Bonutti
8,834,490	B2	9/2014	Bonutti
8,840,629	B2	9/2014	Bonutti
8,845,699	B2	9/2014	Bonutti
8,858,557	B2	10/2014	Bonutti
8,956,417	B2	2/2015	Bonutti
9,044,322	B2	6/2015	Bonutti
9,044,341	B2	6/2015	Bonutti
9,050,152	B2	6/2015	Bonutti
2001/0005796	A1	6/2001	Zdeblick
2001/0023371	A1	9/2001	Bonutti
2001/0034553	A1	10/2001	Michelson
2002/0004683	A1	1/2002	Michelson
2002/0010511	A1	1/2002	Michelson
2002/0016595	A1	2/2002	Michelson
2002/0029055	A1	3/2002	Bonutti
2002/0040246	A1	4/2002	Bonutti
2002/0082597	A1	6/2002	Fraser
2002/0095160	A1	7/2002	Bonutti
2002/0138146	A1	9/2002	Jackson
2002/0143399	A1	10/2002	Sutcliffe
2002/0147450	A1	10/2002	Lehuec
2003/0009147	A1	1/2003	Bonutti
2003/0023260	A1	1/2003	Bonutti
2003/0045939	A1	3/2003	Casutt
2003/0105528	A1	6/2003	Shimp et al.
2003/0125739	A1	7/2003	Bagga et al.
2003/0167091	A1	9/2003	Scharf
2003/0181981	A1	9/2003	Lemaire
2004/0010287	A1	1/2004	Bonutti
2004/0078078	A1	4/2004	Shepard
2004/0082998	A1	4/2004	Shinomiya
2004/0082999	A1	4/2004	Mathys, Jr.
2004/0097794	A1	5/2004	Bonutti
2004/0098016	A1	5/2004	Bonutti
2004/0117018	A1	6/2004	Michelson
2004/0138689	A1	7/2004	Bonutti
2004/0138690	A1	7/2004	Bonutti
2004/0143270	A1	7/2004	Zucherman et al.
2004/0143285	A1	7/2004	Bonutti
2004/0143332	A1	7/2004	Krueger et al.
2004/0172033	A1	9/2004	Bonutti
2004/0176853	A1	9/2004	Sennett et al.
2004/0193181	A1	9/2004	Bonutti
2004/0230223	A1	11/2004	Bonutti
2005/0055098	A1	3/2005	Zdeblick et al.
2005/0065607	A1	3/2005	Gross
2005/0101960	A1*	5/2005	Fiere et al. 606/72
2005/0149192	A1	7/2005	Zuchermann et al.
2005/0149193	A1	7/2005	Zuchermann et al.
2005/0159819	A1	7/2005	McCormack et al.
2005/0171607	A1	8/2005	Michelson
2005/0177236	A1	8/2005	Mathieu et al.
2005/0187625	A1	8/2005	Wolek et al.
2005/0216059	A1	9/2005	Bonutti
2005/0240267	A1	10/2005	Randall et al.
2005/0240271	A1	10/2005	Zubok et al.
2005/0256574	A1	11/2005	Paul et al.
2005/0267534	A1	12/2005	Bonutti
2006/0085071	A1*	4/2006	Lechmann et al. 623/17.11
2006/0129240	A1	6/2006	Lessar et al.

(56) **References Cited**

U.S. PATENT DOCUMENTS

2006/0167495	A1	7/2006	Bonutti	
2006/0217809	A1	9/2006	Albert et al.	
2006/0235470	A1	10/2006	Bonutti	
2006/0265009	A1	11/2006	Bonutti	
2007/0088441	A1	4/2007	Duggal et al.	
2007/0106388	A1	5/2007	Michelson	
2007/0123987	A1	5/2007	Bernstein	
2007/0135923	A1	6/2007	Peterman et al.	
2007/0162130	A1	7/2007	Rashbaum et al.	
2007/0168032	A1	7/2007	Muhanna et al.	
2007/0208378	A1	9/2007	Bonutti	
2007/0225806	A1	9/2007	Squires et al.	
2007/0225810	A1	9/2007	Colleran et al.	
2007/0225812	A1	9/2007	Gill	
2007/0233253	A1*	10/2007	Bray et al.	623/17.11
2007/0250167	A1	10/2007	Bray et al.	
2007/0270961	A1	11/2007	Ferguson	
2008/0039873	A1	2/2008	Bonutti	
2008/0047567	A1	2/2008	Bonutti	
2008/0051890	A1	2/2008	Waugh et al.	
2008/0051907	A1	2/2008	Marik	
2008/0058822	A1	3/2008	Bonutti	
2008/0065140	A1	3/2008	Bonutti	
2008/0103519	A1	5/2008	Bonutti	
2008/0108916	A1	5/2008	Bonutti	
2008/0114399	A1	5/2008	Bonutti	
2008/0133013	A1	6/2008	Duggal et al.	
2008/0140116	A1	6/2008	Bonutti	
2008/0140117	A1	6/2008	Bonutti	
2009/0076608	A1	3/2009	Gordon et al.	
2009/0210062	A1*	8/2009	Thalgott et al.	623/17.16
2010/0057206	A1	3/2010	Duffield et al.	
2010/0145460	A1	6/2010	Mcdonough	
2010/0305704	A1	12/2010	Messerli	
2011/0087327	A1	4/2011	Lechmann	
2011/0166658	A1	7/2011	Garber et al.	
2011/0251689	A1	10/2011	Seifert et al.	
2012/0010623	A1	1/2012	Bonutti	
2012/0215226	A1	8/2012	Bonutti	
2012/0215233	A1	8/2012	Bonutti	
2012/0221017	A1	8/2012	Bonutti	
2012/0245690	A1	9/2012	Cowan, Jr. et al.	
2013/0110247	A1	5/2013	Doran et al.	
2013/0226185	A1	8/2013	Bonutti	
2013/0237989	A1	9/2013	Bonutti	
2013/0289729	A1	10/2013	Bonutti	
2014/0012380	A1	1/2014	Laurence et al.	
2014/0018854	A1	1/2014	Bonutti	
2014/0025110	A1	1/2014	Bonutti	
2014/0025111	A1	1/2014	Bonutti	
2014/0025112	A1	1/2014	Bonutti	
2014/0039623	A1	2/2014	Iott et al.	
2014/0148905	A1	5/2014	Messerli	
2014/0228963	A1	8/2014	Bonutti	
2014/0257380	A1	9/2014	Bonutti	
2010/4030956		10/2014	Bonutti	
2014/0343573	A1	11/2014	Bonutti	

FOREIGN PATENT DOCUMENTS

WO	9963914	A1	12/1999
WO	2005007040	A1	1/2005
WO	2007098288	A2	8/2007
WO	WO 2007/098288		8/2007
WO	2008014258	A2	1/2008

OTHER PUBLICATIONS

M. Spruit et al., The in vitro stabilizing effect of polyetheretherketone cages versus a titanium cage of similar design for anterior lumbar interbody fusion, 14(8) Eur. Spine J. 752, 752-758 (2005).

P. Schleicher et al., Biomechanical comparison of two different concepts for stand alone anterior lumbar interbody fusion, 17(12) Eur. Spine J. 1757, 1757-1765 (2008).

P.W. Pavlov et al., Anterior lumbar interbody fusion with threaded fusion cages and autologous bone grafts, 9 Eur. Spine J. 224, 224-229 (2000).

* cited by examiner

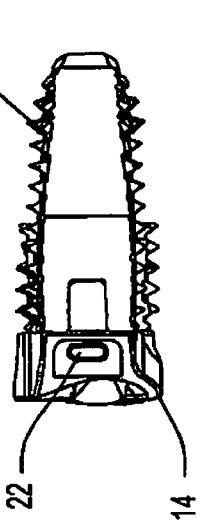

Fig. 3

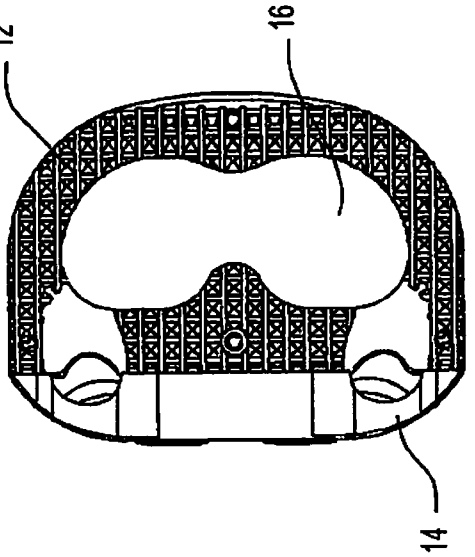

Fig. 4

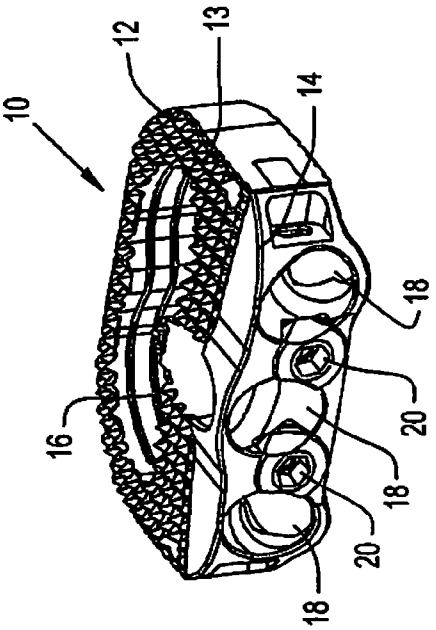

Fig. 1

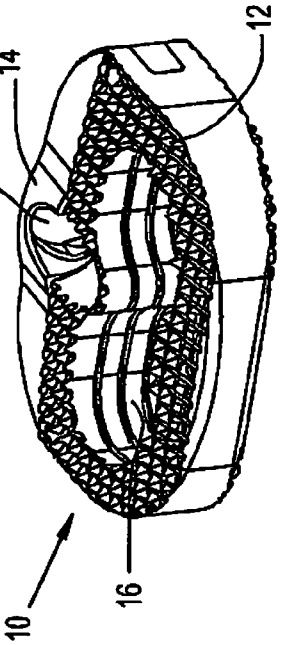

Fig. 2

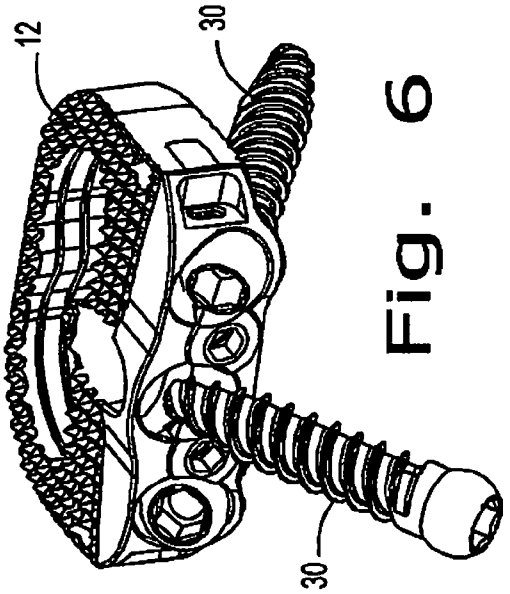

Fig. 6

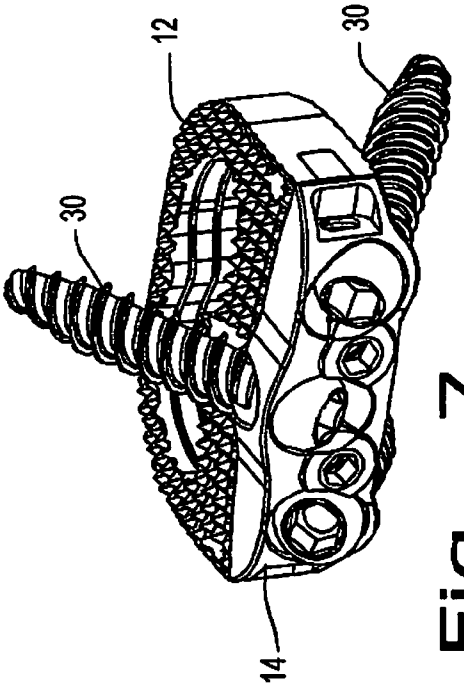

Fig. 7

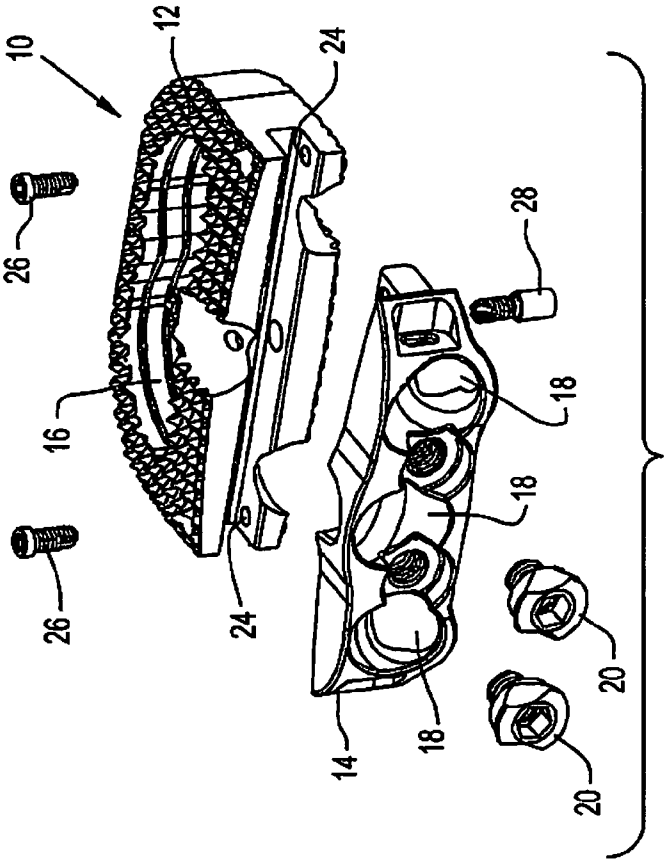

Fig. 5

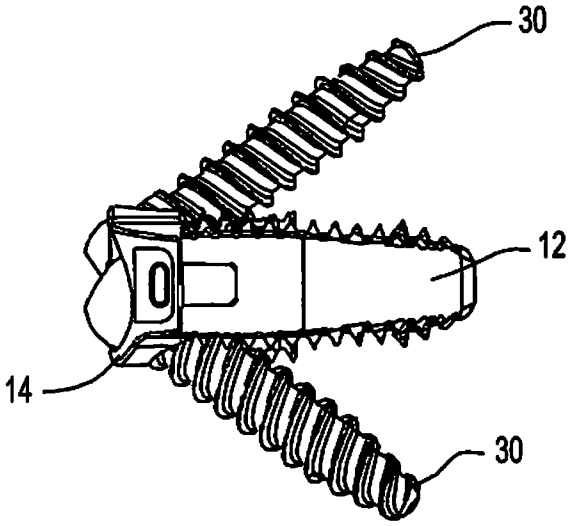

Fig. 8

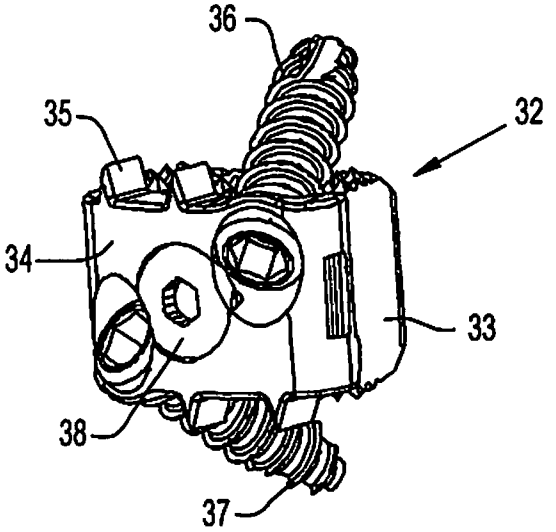

Fig. 9

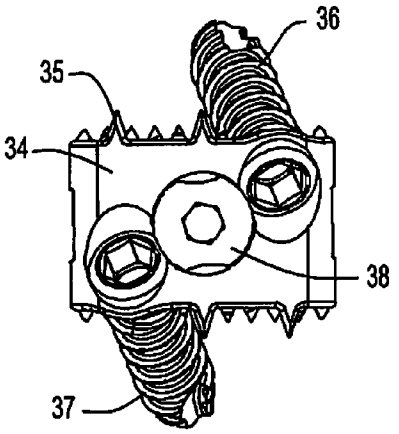

Fig. 10

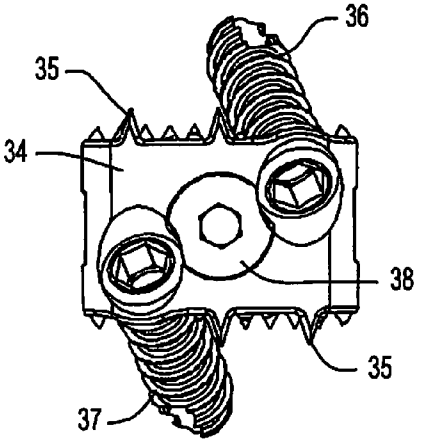

Fig. 11

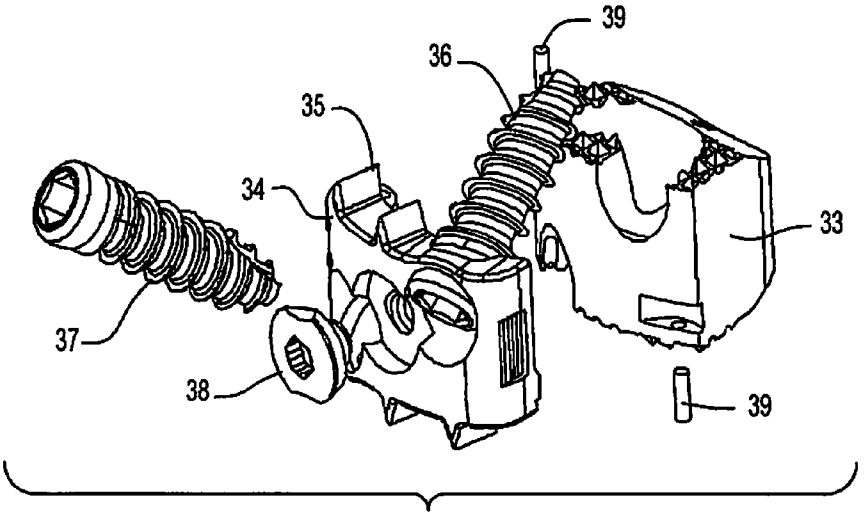

Fig. 12

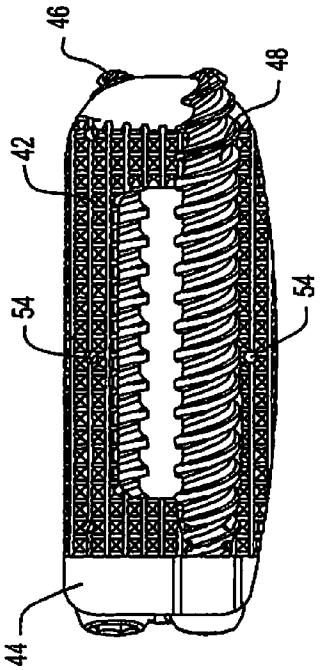

Fig. 14

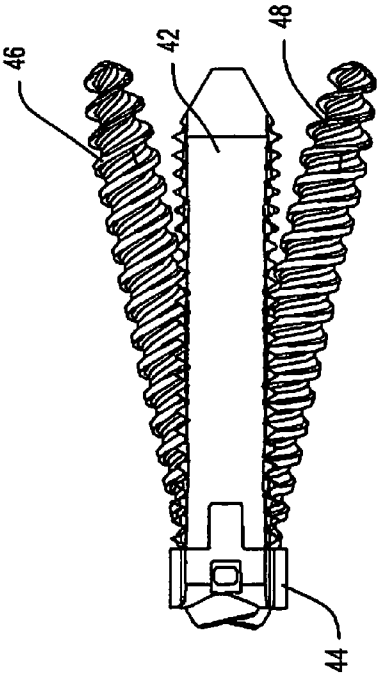

Fig. 16

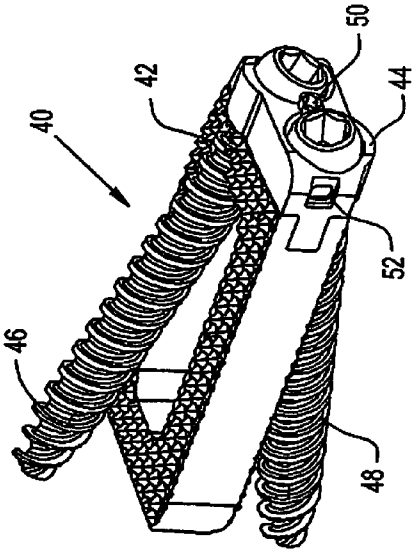

Fig. 13

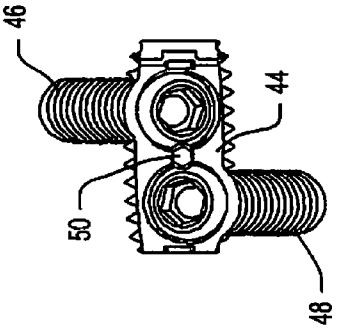

Fig. 15

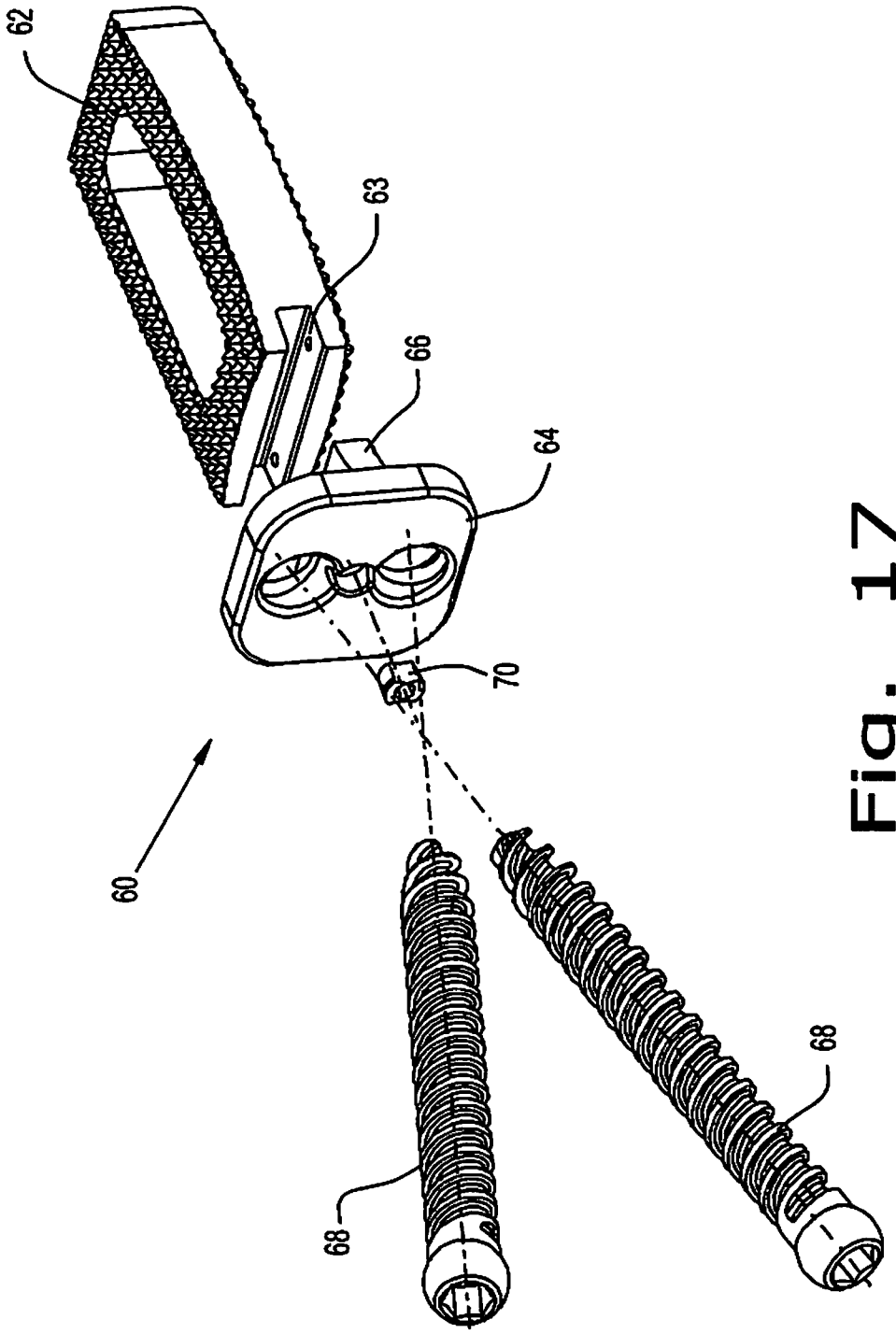

Fig. 17

INTERVERTEBRAL FUSION IMPLANT

CROSS REFERENCE TO RELATED APPLICATIONS

The present application is a continuation application of patent application Ser. No. 12/202,690 filed on Sep. 2, 2008 now U.S. Pat. No. 8,328,872, which is incorporated by its entirety herein.

FIELD OF THE INVENTION

The present disclosure generally relates to a fixation device for positioning and immobilizing at least two adjacent vertebra. In particular, the present invention relates to a stand alone interbody fusion device for implementation in the spine.

BACKGROUND OF THE INVENTION

The vertebral spine is the axis of the skeleton on which all of the body parts "hang". In humans, the normal spine has seven cervical, twelve thoracic and five lumbar segments. The lumbar spine sits upon the sacrum, which then attaches to the pelvis, and in turn is supported by the hip and leg bones. The bony vertebral bodies of the spine are separated by intervertebral discs, which act as joints but allow known degrees of flexion, extension, lateral bending, and axial rotation and translation.

The typical vertebra has a thick anterior bone mass called the vertebral body, with a neural (vertebral) arch that arises from the posterior surface of the vertebral body. The central of adjacent vertebrae are supported by intervertebral discs. The spinal disc and/or vertebral bodies may be displaced or damaged due to trauma, disease, degenerative defects, or wear over an extended period of time. One result of this displacement or damage to a spinal disc or vertebral body may be chronic back pain. In many cases, to alleviate back pain from degenerated of herniated discs, the disc is removed along with all or part of at least one neighboring vertebrae and is replaced by an implant that promotes fusion of the remaining bony anatomy.

However, the success or failure of spinal fusion may depend upon several factors. For instance the spacer or implant or cage used to fill the space left by the removed disc and bony anatomy must be sufficiently strong to support the spine under a wide range of loading conditions. The spacer should also be configured so that it likely to remain in place once it has been positioned in the spine by the surgeon. Additionally the material used for the spacer should be biocompatible material and should have a configured that promotes bony ingrowth.

In combination with spacers or cages, a plating system is used to further stabilize the spine during the fusion process. These devices, commonly referred to as bone fixation plating systems, typically include one or more plates and screws for aligning and holding vertebrae in a fixed position with respect to one another. Plating systems independent of the spacers provide additional complications such as loosening and failure of the hardware. Two common failures are the breakage of the plates, and the backing out of screws into soft tissues of the patient's body. The backing out of the screws is typically a result of the screws failure to achieve a sufficient purchase in the bone, although the stripping of the screws has also been known to cause this problem. Another common problems is that plating systems require "carpentry" work to match fit aspects of the vertebral bodies.

There is a need for a spine stabilization system that in promotes fusion of adjacent vertebrae while at the same time provides stabilization of the spinal area where fusion occurs. There is a need for a system that incorporates both the fusion element and the plating element in one system to reduce the possible complications that may occur. There is also a need to provide a system that reduces the complications that may occur in the fusion element and the plating element and a need for this system to be configured so that positioning this system is efficient and easy.

SUMMARY OF THE INVENTION

The present invention provides an intervertebral implant for implantation in a treated area of an intervertebral space between vertebral bodies of a spine. The implant includes a spacer portion having an inferior and superior surface, wherein the inferior and superior surfaces each have a contact area capable of engaging with anatomy in the treated area, and the inferior and superior surfaces define a through-hole extending through the spacer body. The present invention further provides screw holes extending from a side portion to the inferior and superior surfaces of the spacer portion and a plate portion rigidly coupled to the spacer portion through a coupling means, wherein the plate portion contains screws holes for receiving screws. A screw back out prevention mechanism is adapted on the plate portion and prevents the back out of screws from the screw holes.

BRIEF DESCRIPTION OF THE DRAWINGS

FIG. **1** is a perspective view of one embodiment of an intervertebral implant according to the present invention;

FIG. **2** is another perspective view of the embodiment of the implant shown in FIG. **1**;

FIG. **3** is a side view of the intervertebral implant of FIG. **1**;

FIG. **4** is a top view of the intervertebral implant of FIG. **1**;

FIG. **5** is an exploded view of the intervertebral implant of FIG. **1**;

FIGS. **6** and **7** is a perspective view of the intervertebral implant of FIG. **1** which include illustrations of bone fasteners;

FIG. **8** is another side view of the intervertebral implant of FIG. **1** incorporating bone fasteners;

FIG. **9** is a perspective view of another embodiment of the intervertebral implant;

FIG. **10** is a front view of the intervertebral implant with bone screws locked of FIG. **9**;

FIG. **11** is a front view of the intervertebral implant illustrated in FIG. **9**;

FIG. **12** is an exploded view of the intervertebral implant with bone fasteners unlocked of FIG. **9**;

FIG. **13** is yet another embodiment of the intervertebral implant;

FIG. **14-16** are different views of the intervertebral implant of FIG. **13**; and

FIG. **17** is an exploded view of the intervertebral implant of FIG. **14** according to the present invention.

DETAILED DESCRIPTION OF THE ILLUSTRATED EMBODIMENTS

Embodiments of the disclosure are generally directed to flexible stabilization systems for use with the anterior, anterolateral, lateral, and/or posterior portions of at least one motion segment unit of the spine. The systems of the invention are designed to be conformable to the spinal anatomy, so as to be

generally less intrusive to surrounding tissue and vasculature than existing rigid stabilization systems.

Certain embodiments may be used on the cervical, thoracic, lumbar, and/or sacral segments of the spine. For example, the size and mass increase of the vertebrae in the spine from the cervical to the lumbar portions is directly related to an increased capacity for supporting larger loads. This increase in load bearing capacity, however, is paralleled by a decrease in flexibility and an increase in susceptibility to strain. When rigid immobilization systems are used in the lumbar segment, the flexibility is decreased even further beyond the natural motion restriction of that segment. Replacing the conventional rigid immobilization systems with certain embodiments disclosed herein may generally restore a more natural movement and provide added support to the strain-susceptible area.

FIGS. **1-8** illustrate the different views of one particular embodiment of the present invention. The intervertebral fusion implant as shown in FIGS. **1-8** is a stand-alone anterior lumbar interbody fusion device used to provide structural stability in skeletally mature individuals following discectomies. These implants are available in various heights and geometric options to fit the anatomically needs of a wide variety of patients. Specifically, FIGS. **1-4** illustrate one embodiment of an intervertebral fusion implant **10** according to the present invention. Implant **10** is generally positioned in the intervertebral space between two adjacent vertebrae. As shown in the figures, implant **10** primarily incorporates a spacer portion **12** and a plate portion **14**. In this particular embodiment, the spacer portion **12** includes a graft window **16** for the placement of bone graft to enhance fusion between two adjacent vertebrae. The plate portion **14** includes at least one screw hole **18**, however, in the preferred embodiment of the present invention, three screw holes **18** are provided. Also, in the plate portion **14** of the implant **10**, a screw back out prevention mechanism **20** is provided. There is also provided a coupling means **26** which connect the spacer portion **12** and the plate portion **14** rigidly to each other. The coupling means **26** will be discussed in greater detail with reference to FIGS. **5-8**.

The spacer portion **12** can be comprised of any material that is conducive to the enhancement of fusion between the two adjacent vertebrae. In one particular embodiment, the spacer portion **12** is made of PEEK material which is physiologically compatible. It should be noted that any other material that are physiologically compatible may also be used. The spacer portion **12** contains tantalum pins that enable radiographic visualization. The spacer portion **12** further comprises superior and inferior portions that are provided with a plurality of pyramidal protrusions **13**. The superior and inferior portions of the spacer portion are bi-convex for greater contact with the vertebral endplates of the adjacent vertebrae. The protrusions **13** can be configured to be any size or shape for further anchoring the spacer portion **12** to each of the adjacent vertebrae. Protrusions **13** on the superior and inferior surfaces of each implant grip the endplates of the adjacent vertebrae to aid in expulsion resistance.

The plate portion **14** can also be comprised of any physiologically compatible material. In the preferred embodiment, the plate portion of the implant **10** is composed of titanium. The plate portion **14** as illustrated in FIG. **1**, are provided with three screw holes. However, it should be noted that implant **10** may be comprised of only one screw hole. The screw holes **18** are situated both in the spacer portion **12** and the plate portion **14** for receiving bone screws which are attached to the adjacent vertebral bodies at different angles.

FIG. **5** illustrates an exploded view of the intervertebral stand along fusion device **10**. In this exploded view, clearer view of the combination of the plate portion **14** and the spacer portion **12** is illustrated. The spacer portion **12** and the plate portion **14** are coupled to each other view connection points **24** and through the use of connection pins **26** and **28**.

FIGS. **6-8** illustrate the fusion device **10** in various views associated with the screws **30** provided in screw holes **18**. The screw holes **18** are configured to receive screws **30** at various angles. The screws **30** enter the screw holes **18** at specified angles to enter the adjacent vertebral bodies at the optimal locations. The screws **30** are configured and adapted to provide optimal purchase with the adjacent vertebral bodies.

Now, turning to the method of positioning the implant, it should be noted that the intervertebral implant **10** is positioned in the spine after the disc portion between two vertebral bodies is exposed and removed using rongeurs and other suitable instruments. The posterior and lateral walls of the annulus are generally preserved to provide peripheral support for the implant and graft materials. A trial device attached to a trial holder is then inserted into the disc space to determine size of the implant. This procedure is generally conducted using fluoroscopy and tactile feel. After the appropriate sized implant is selected and attached to an implant holder and drill guide, the implant may be inserted into the disc space. Once the implant is positioned with the disc space, supplemental graft material can used to enhance fusion. Once the implant is positioned inside the disc, an awl or any similar type of instrument can be used to drill through the screw hole and break the cortex of the adjacent vertebral body. The surgeon performing this procedure may then use a depth gauge to determine the screw length. Once the appropriate screw length is determined, screws are inserted using a self-retaining screwdriver. After the screws are finally inserted and secured thereby providing solid purchase with the adjacent vertebral bodies, the screw anti-back out mechanism is engaged and secured. In this particular embodiment, the anti-back out mechanism is two set screws that retain the three screws with the implant. It should be noted that the implant may be implanted in the vertebral space using an anterior, posterior and/or lateral approach.

FIG. **9** illustrates a perspective view of the zero-profile intervertebral implant **32** for positioning in the cervical region of the spine. The present invention relates to an implant having a peek spacer portion **33** that is coupled to a titanium plate portion **34** through the use of titanium dowel pins **39**. However, it should be noted that the titanium plate portion **34** and the peek spacer portion **33** maybe coupled through any other feasible means such as hooks, screws, and any other type of fastening means. The implant **32** also allows for at least two titanium screws **36** and **37** to be inserted at a compound angle for maximum screw purchase into the superior and inferior vertebral bodies. A locking mechanism **38** is provided on the plate portion **34** to capture the sides of both of the at least two screws **36** and **37** with a 90 degree turn preventing the titanium screws **36** and **37** from backing out. It should be noted that the present application is not limited to being of a PEEK spacer and a titanium plate. Other materials that are physiologically compatible which are similar and which may be unique to spacers and plates may be utilized in various combinations.

FIGS. **10** and **11** illustrate the front view of the plate portion of the implant. Specifically, FIGS. **10** and **11** illustrate a closed and an open position respectively with reference to the anti-back out mechanism **38**. Also, it should be noted that the titanium plate **34** is provided with knife like edges **35** which are designed to engage the vertebral body and provides addi-

tional torsional stability to that of the bone screws. The plate **35** is also provided with "eye brow" like structure which fully captures the bone screws **36** and **37** while still allowing for the screws to reside about the tooth root plane and remaining lower than the tooth (protrusions on the spacer portion **33**). The plate **35** geometry allows for the minimum reduction of peek volume. The plate **35** height remains level to the peek tooth root so that compressive loads are always subjected to the peek body where the graft is contained. Compound holes are drilled to accept bone screws **36** and **37** and to allow for fixed or variable angle screws. The anti-back out mechanism is engaged so that the screws **26** and **37** do not back out of the implant **32**.

FIG. **12** illustrates an exploded view of the intervertebral implant. The plate portion **34** and spacer portion **33** have at least 2 male and female ledges which are capable of interfacing with each other. The connection of the male and female ledges are offset at different heights to minimize cross-sectional area loss. Also illustrated in FIG. **12** is the dowel pins used to connect the spacer portion to the plate portion as one means of coupling of the spacer portion **33** and the plate portion **34**. It should be noted that various means such as hooks, staples and screws can be used to attach the spacer portion to the plate portion of the present invention.

The spacer portion **33** of the implant provides a leading edge chamfer which enables self distraction of the vertebral bodies while inserting. The spacer portion **33** also provides teeth like structures in the superior and inferior aspects of the spacer body to help prevent migration of the implant. The root of the teeth or protrusions on the base of the implant serves as the defining plane for the superior and inferior vertebral bodies. Finally, the spacer portion **33** provides an axial shaped hole which enables a maximum amount of graft for packing within the implant. However, it should be noted that the graft hole can be designed to be multiple holes or any in other geometrical shape to enhance fusion through the insertion of graft material.

FIGS. **13-16** illustrate an intervertebral implant for positioning in the intervertebral space using a lateral approach. The intervertebral implant **40** consists of a spacer portion **42** and a plate potion **44**. The spacer portion and the plate portion are configured to be able to receive screws **46** and **48** for attachment to adjacent vertebral bodies. The spacer portion **42** and the plate portion **44** are rigidly coupled together through a coupling means **52**. The plate portion **44** is provided with an anti-back out mechanism **50** so that the screws **46** and **48** are fixedly retained within the fusion device **40**.

FIG. **17** illustrates another embodiment of an intervertebral implant **60** that is positioned into the disc space laterally. In this embodiment, which is similar to the embodiment disclosed in FIGS. **13-16**, the spacer portion **62** is provided with a plurality of protrusions in the superior and inferior portions. These protrusions grip the endplates of the adjacent vertebrae to aid in expulsion resistance. The spacer portion **62** also contains a plate receiving area **63** for receiving the plate portion **64**. The plate receiving area **63** is configured to receive a plate protrusion **66** for coupling the spacer portion **62** and the plate portion **64** together through the use of pins or any other similar type of coupling means. The spacer portion **62** and the plate portion **64** are rigidly coupled together through the use of the coupling means.

The plate portion **64** is configured with at least two screw holes for receiving screws **68**. The screws **68** are positioned at angles to insert through the spacer and the adjacent vertebral body to gain maximum purchase and stability. The screws **68** are retained with the implant **60** through the use of an anti-screw back out mechanism **70**. When this mechanism is engaged by turning at least 90 degrees through the use an instrument such as a screwdriver, the screws **68** are maintained within the implant and the honey structure of the adjacent vertebral bodies.

While it is apparent that the invention disclosed herein is well calculated to fulfill the objects stated above, it will be appreciated that numerous modifications and embodiments may be devised by those skilled in the art.

What is claimed is:

1. An intervertebral implant for implantation in a treated area of an intervertebral space between vertebral bodies of a spine, wherein said implant comprises:

a spacer portion having an inferior and a superior surface, an anterior surface, posterior surface, and first and second sides, wherein the inferior and superior surfaces each have a contact area capable of engaging with anatomy in the treated area, and the inferior and superior surfaces define a through-hole extending through the spacer portion;

at least a first hole extending from the anterior surface to the superior surface of the spacer portion and at least a second hole extending from the anterior surface to the inferior surface of the spacer portion;

a plate portion rigidly coupled to the spacer portion through a coupling mechanism, wherein the plate portion contains at least first and second holes extending from an anterior surface of the plate to a posterior surface of the plate, the at least first and second holes configured for receiving fasteners; and

wherein a fastener back out prevention mechanism is adapted on the plate portion and prevents the back out of the fasteners from the first and second holes,

wherein the spacer portion length from the anterior surface to the posterior surface is greater than a distance from a first side to a second side of the plate portion,

wherein a width of the spacer portion from the first side to the second side is greater than the width of the plate portion,

wherein the spacer portion and the plate portion are configured to be positioned laterally

wherein the through-hole extending through the spacer portion from the inferior surface to the superior surface is configured with a length extending from the anterior surface of the spacer portion towards the posterior surface of the spacer portion, wherein the length of the through-hole is greater than the width of the plate portion

wherein the plate portion is configured with no more than the first and second holes,

wherein the plate portion further includes extensions with no openings and

wherein the extensions are generally flush with the anterior surface of the plate.

2. The intervertebral implant of claim **1**, wherein the fasteners are inserted into adjacent vertebral bodies at divergent angles.

3. The intervertebral implant of claim **1**, wherein the coupling mechanism is at least one pin that rigidly couples the spacer portion with the plate portion.

4. The intervertebral implant of claim **1**, wherein the plate portion and the spacer portion are configured to structurally mate with one another.

5. The intervertebral implant of claim **1**, wherein the plate portion is configured to be substantially flush with the vertebral body.

6. The intervertebral implant of claim **1**, wherein the plate portion is comprised of metal.

7. The intervertebral implant of claim **6**, wherein the metal is comprised of titanium.

8. The intervertebral implant of claim **1**, wherein the spacer portion is comprised of plastic.

9. The intervertebral implant of claim **1**, wherein the spacer portion comprises a plurality of protrusions on superior and inferior portions.

10. A method of implanting an intervertebral implant for implantation in a treated area of an intervertebral space between vertebral bodies of a spine, wherein said implant comprises:

accessing the intervertebral space from a lateral approach;

removing a disc portion with instruments adapted to be used in a lateral approach to the vertebral space;

positioning the intervertebral implant within the intervertebral space, wherein the intervertebral implant comprises:

a spacer portion comprising an inferior and superior surface, an anterior and posterior surface, and first and second sides,

wherein the inferior and superior surfaces each have a contact area capable of engaging with anatomy in the treated area, and the inferior and superior surfaces define a through-hole extending through the spacer body;

a first and second through hole extending from an anterior surface of the spacer portion to the inferior and superior surfaces of the spacer portion;

a plate portion rigidly coupled to the spacer portion, wherein the plate portion contains a first and second through hole for receiving a first and second fastener; and

a fastener back out prevention mechanism adapted on the plate portion and prevents the back out of the first and second fastener from the first and second through hole,

wherein the spacer portion has a length from the anterior surface to the posterior surface that is greater than a distance from a first side of the plate portion to a second side of the plate portion and the plate portion is provided with torsional stabilizers, the torsional stabilizers configured with no openings,

wherein width of the spacer portion from the first side to a second side is greater than the distance from the first side of the plate portion to the second side of the plate portion

placing a first and second fastener into the first and second through hole and engaging the adjacent vertebral bodies with the first and second fasteners; and

engaging and locking the fastener back out prevention mechanism to prevent the first and second fasteners from backing out of the intervertebral implant

wherein the spacer portion and the plate portion are configured to be positioned laterally

wherein the through-hole extending through the spacer portion from the inferior surface to the superior surface is configured with a length extending from the anterior surface of the spacer portion towards the posterior surface of the spacer portion, wherein the length of the through-hole is greater than the distance from the first side of the plate portion to the second side of the plate portion,

wherein the plate portion is configured with no more than the first and second through hole for receiving a first and second fastener

wherein the torsional stabilizers are generally flush with the anterior surface of the plate.

11. An intervertebral implant comprising:

a spacer having an upper surface, a lower surface, a first sides surface, a second side surface, an anterior surface, and a posterior surface, wherein the upper and lower surfaces each have a contact area capable of engaging with adjacent vertebral bodies, and wherein the spacer includes a through-hole extending from the upper surface to the lower surface of the spacer,

a plate having an anterior surface, a posterior surface, a first side, a second side, a upper surface and a lower surface, the plate configured to be coupled to the spacer by a coupling mechanism, the plate includes a first through hole and a second through hole that extends from an anterior surface of the plate to the posterior surface of the plate,

wherein spacer includes a first through hole extending from the anterior surface to the upper surface of the spacer and a second through hole extending from the anterior surface to the lower surface of the spacer,

wherein the plate includes extensions on the upper and lower surfaces that have no openings,

wherein the first and second through holes of the plate and the spacer are configured to receive fasteners,

wherein a fastener back out prevention mechanism is adapted on the plate for preventing the back out of the fasteners from the first and second through holes of the plate.

wherein the spacer length defined from the anterior surface to the posterior surface is greater than a distance from the first side of the plate to the second side of the plate,

wherein a width of the spacer from the first side to the second side is greater than the distance from the first side of the plate to the second side of the plate,

wherein the spacer and the plate are configured to be positioned laterally

wherein the through-hole extending through the spacer from the upper surface to the lower surface is configured with a length extending from the anterior surface of the spacer towards the posterior surface of the spacer, wherein the length of the through-hole is greater than a distance from the first side of the plate to the second side of the plate

wherein the extensions are generally flush with the anterior surface of the plate.

* * * * *