US 20060265076A1

(19) United States

(12) Patent Application Publication

(10) Pub. No.: US 2006/0265076 A1

(43) Pub. Date: Nov. 23, 2006

Carter et al.

(54) CATHETER HOLDER FOR SPINAL IMPLANT

(75) Inventors: **Benjamin F. Carter**, Eden Prairie, MN (US); **Erik O. Martz**, Savage, MN (US); **Scott G. Hook**, Edina, MN (US); **Mark A. Rydell**, Golden Valley, MN (US); **Ronald Burke**, Deephaven, MN (US); **Robert E. Kohler**, Lake Elmo, MN (US); **Steven J. Healy**, Vadnais Heights, MN (US); **Bruce R. Bowman**, Eden Prairie, MN (US); **John Sherman**, Wayzata, MN (US); **Jean-Charles Lehuec**, Bordeaux (FR)

Correspondence Address:
FAEGRE & BENSON LLP
PATENT DOCKETING
2200 WELLS FARGO CENTER
90 SOUTH SEVENTH STREET
MINNEAPOLIS, MN 55402 (US)

(73) Assignee: **Disc Dynamics, Inc.**, Eden Prairie, MN

(21) Appl. No.: **11/268,876**

(22) Filed: **Nov. 8, 2005**

Related U.S. Application Data

(60) Provisional application No. 60/677,273, filed on May 3, 2005. Provisional application No. 60/708,245, filed on Aug. 15, 2005. Provisional application No. 60/708,244, filed on Aug. 15, 2005.

Publication Classification

(51) **Int. Cl.**
A61F 2/44 (2006.01)

(52) **U.S. Cl.** **623/17.16**; 606/108

(57) **ABSTRACT**

A catheter holder designed to deliver a curable biomaterial to an intervertebral disc space. By securing the catheter to the catheter holder, the depth of insertion of the catheter into the disc space can be accurately controlled. The catheter holder optionally helps with insertion of a optional mold through the annulotomy and into the disc space created by the nuclectomy. The catheter holder helps keep the mold from being drawn too far into the disc space or pushed too far out of the disc space during polymer injection.

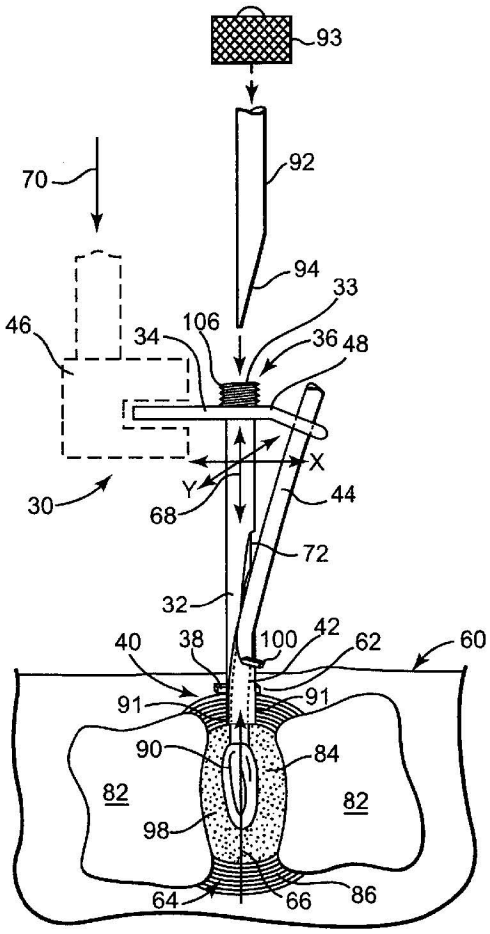

GLOBUS EX. 1020

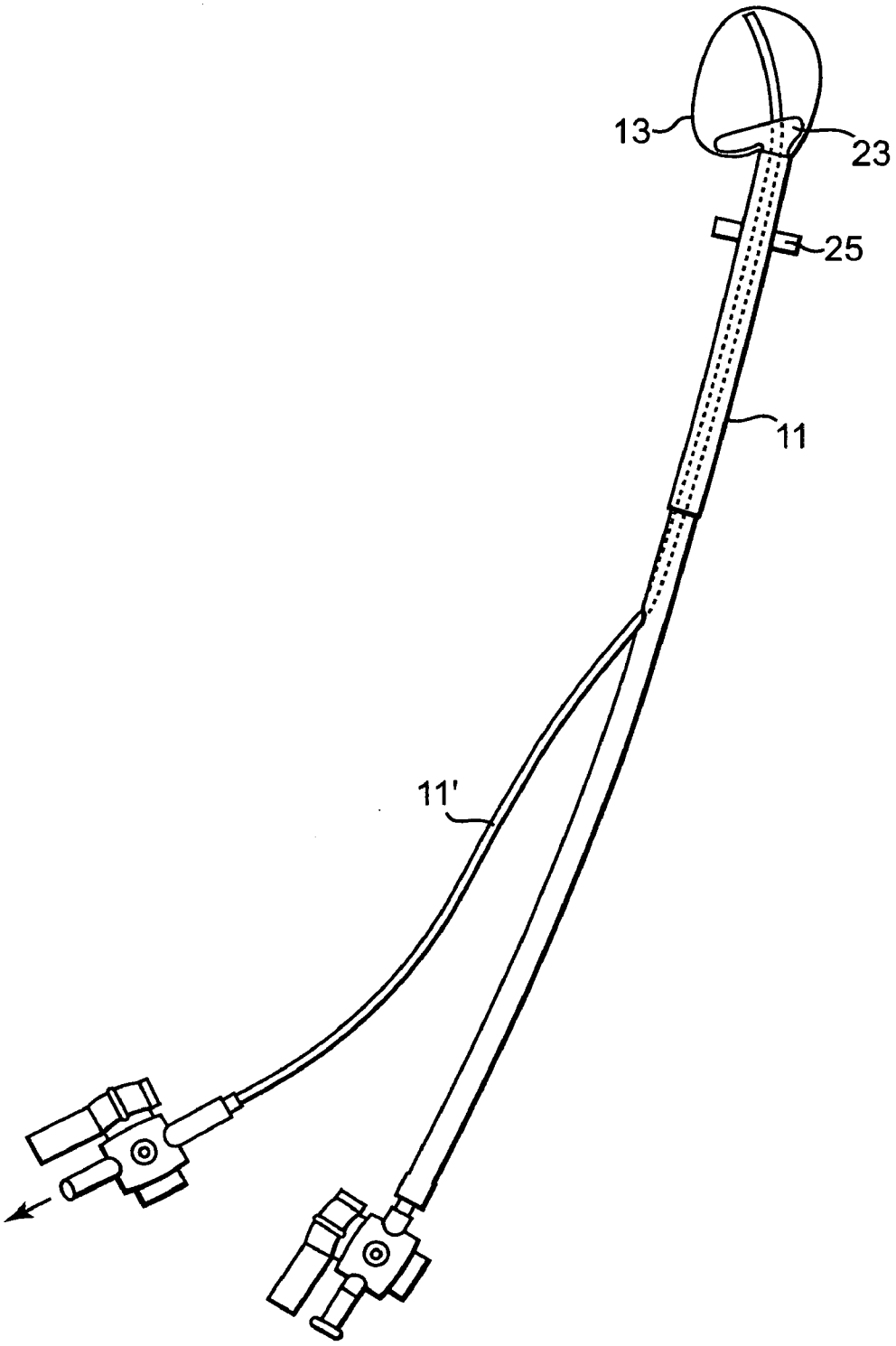

Fig. 1

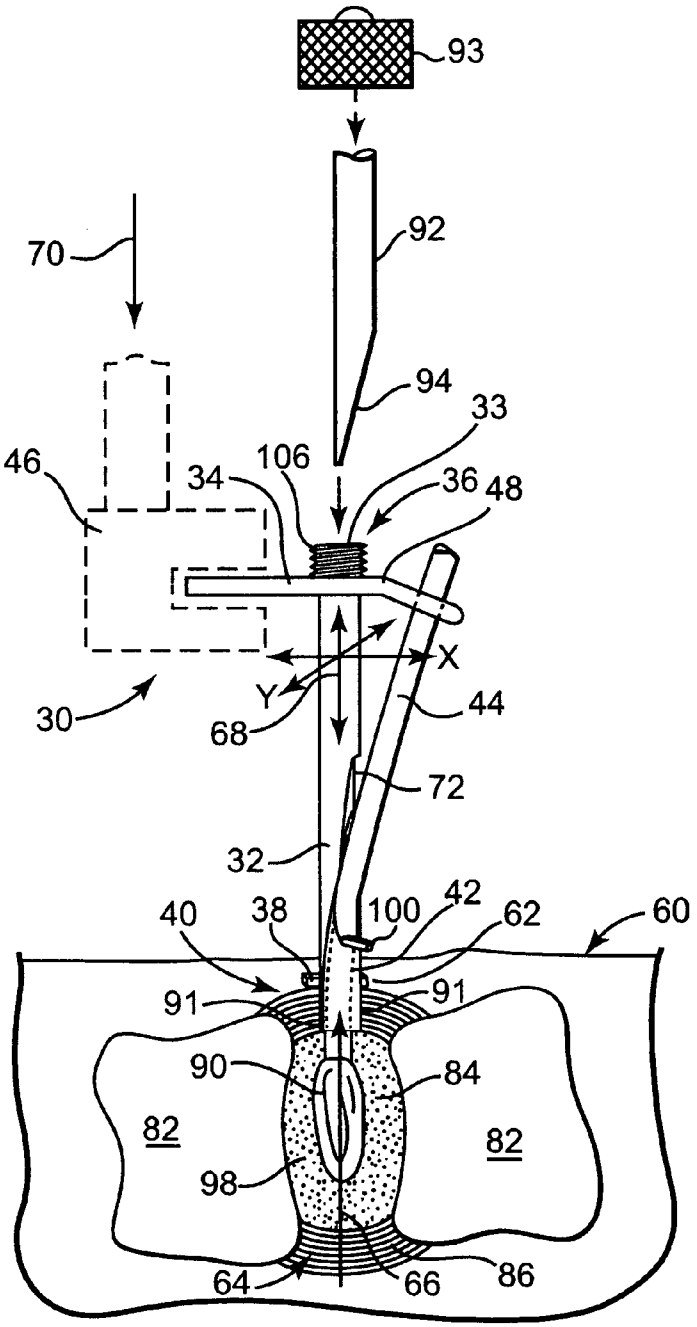

Fig. 2

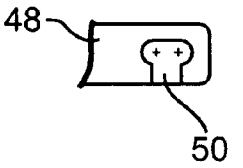

Fig. 3

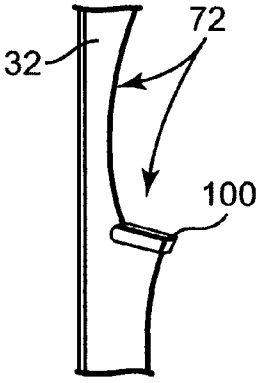

Fig. 4

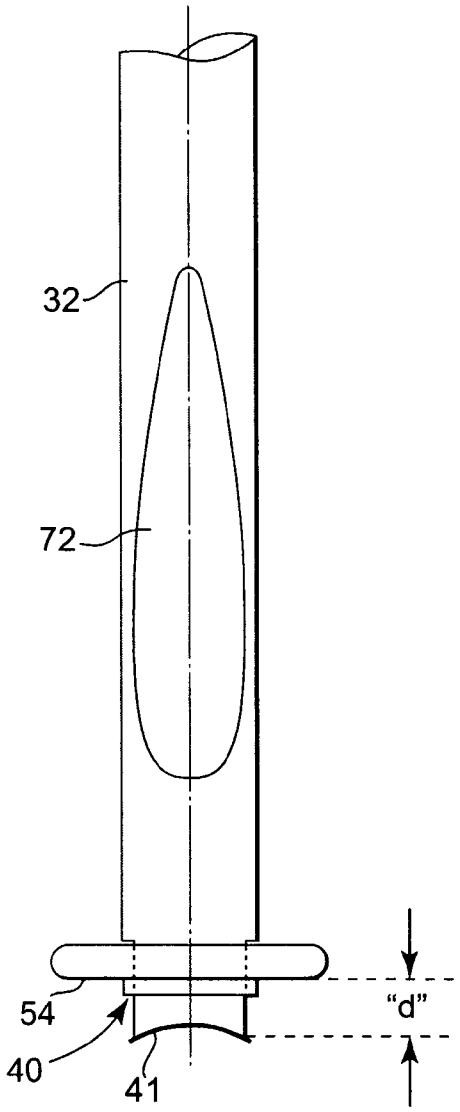

Fig. 6

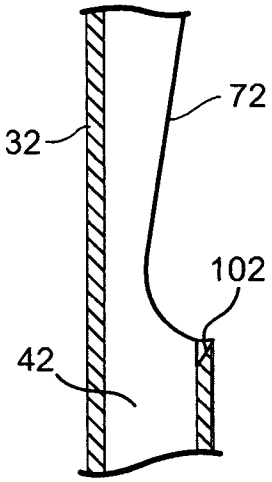

Fig. 5

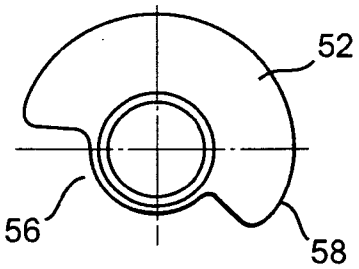

Fig. 7

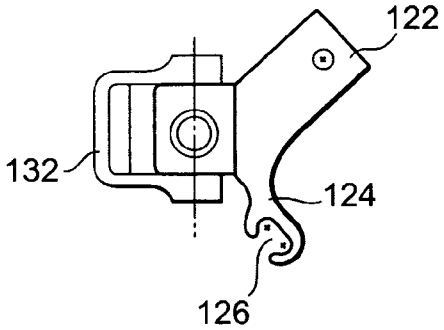

Fig. 8

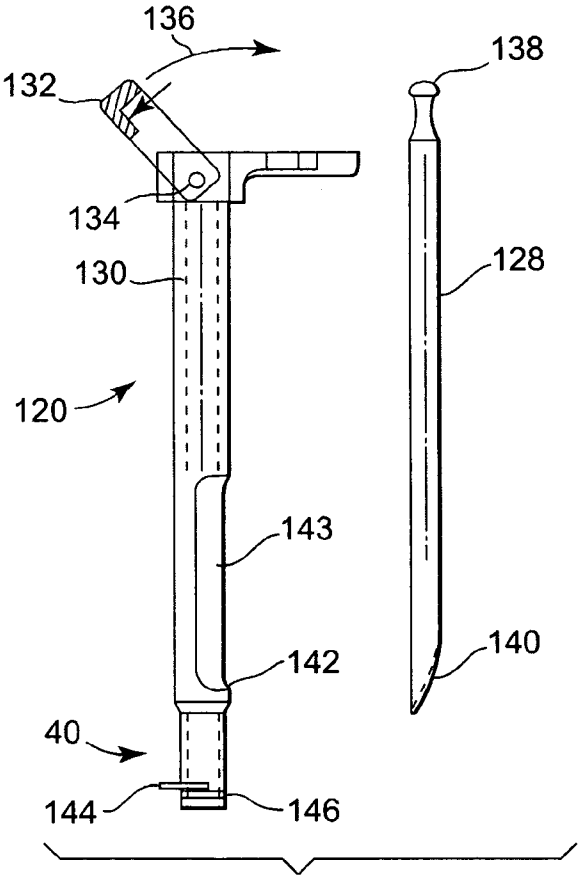

Fig. 9

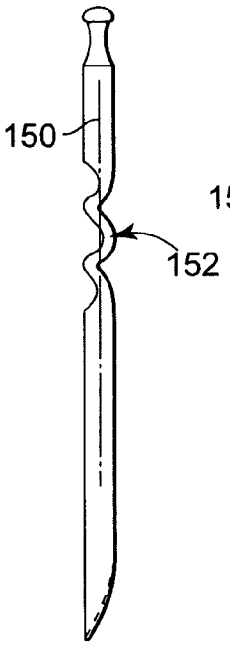

Fig. 10

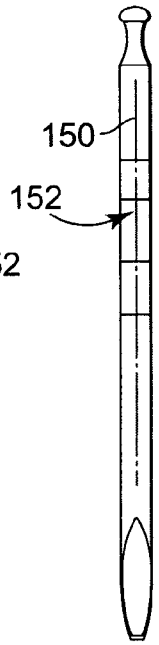

Fig. 11

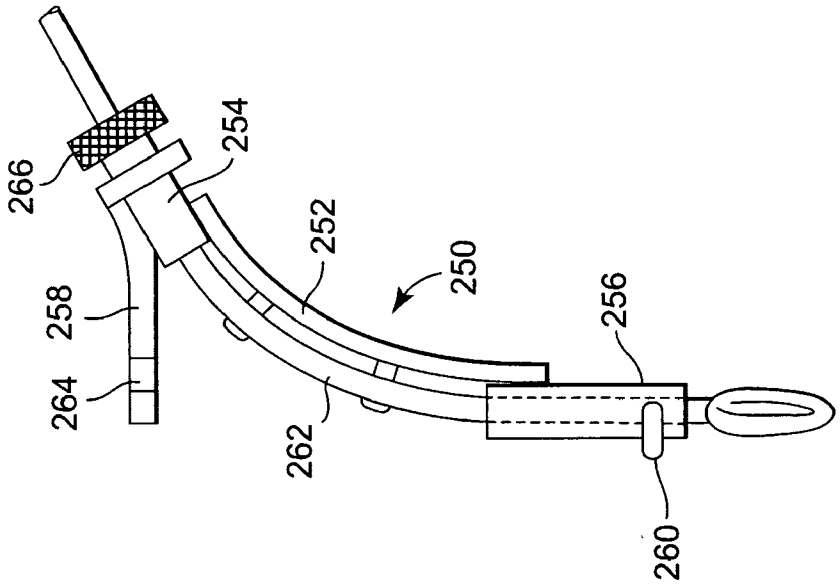

Fig. 14

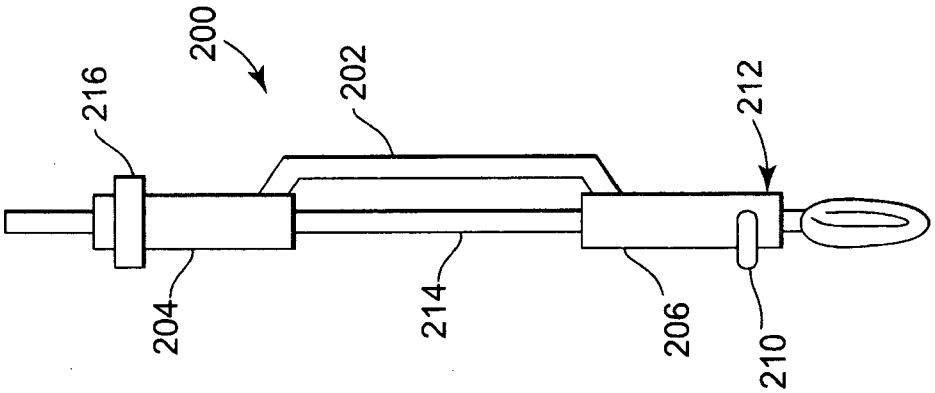

Fig. 13

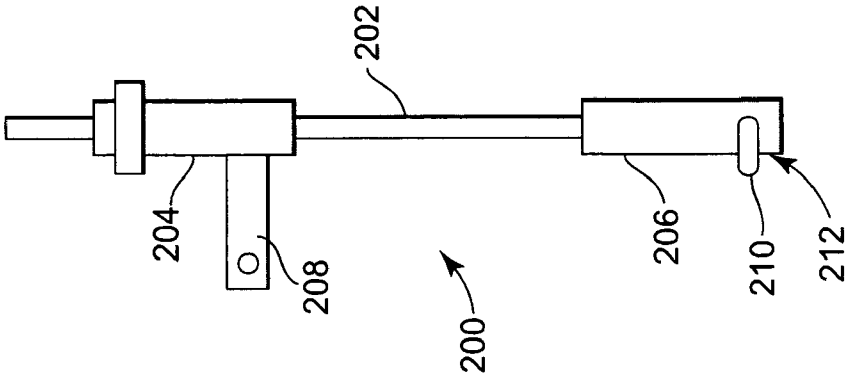

Fig. 12

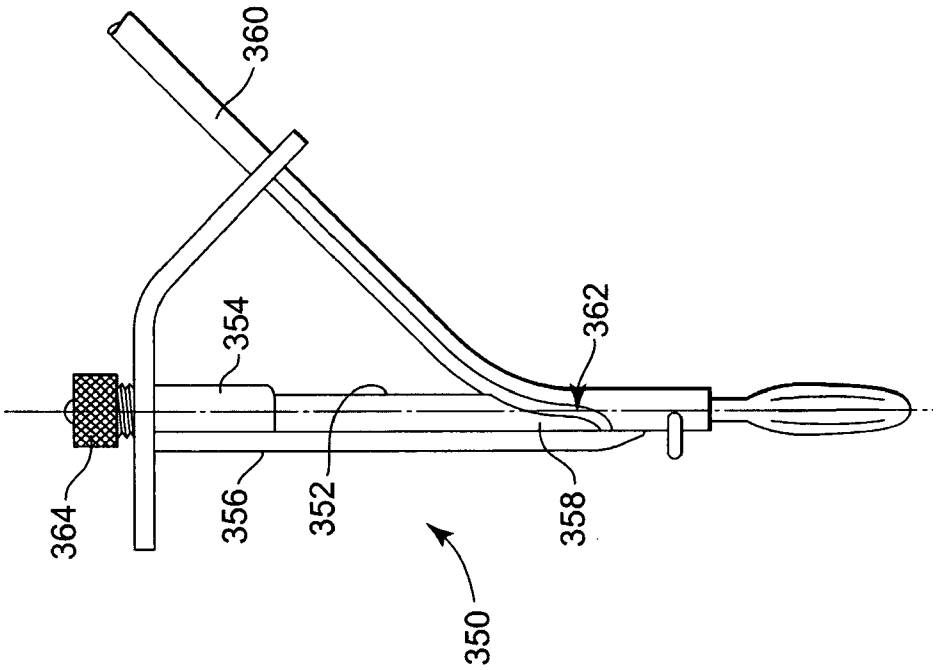
360
354
362
364
356
352
358
350

Fig. 16

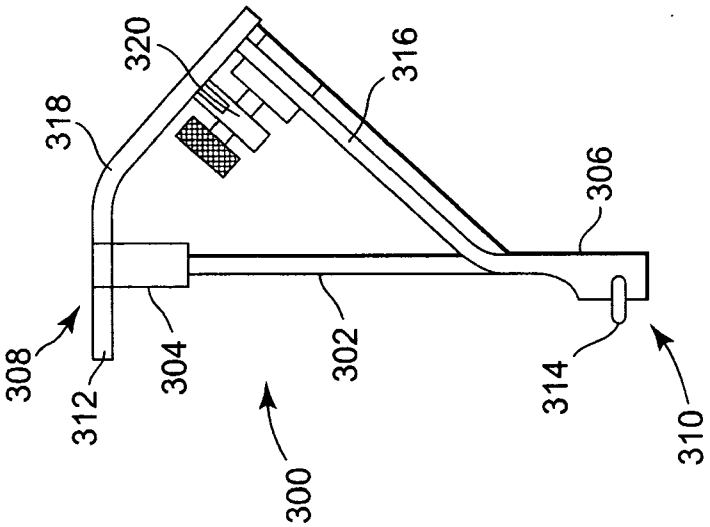
320
316
318
306
308
312
304
302
314
310
300

Fig. 15

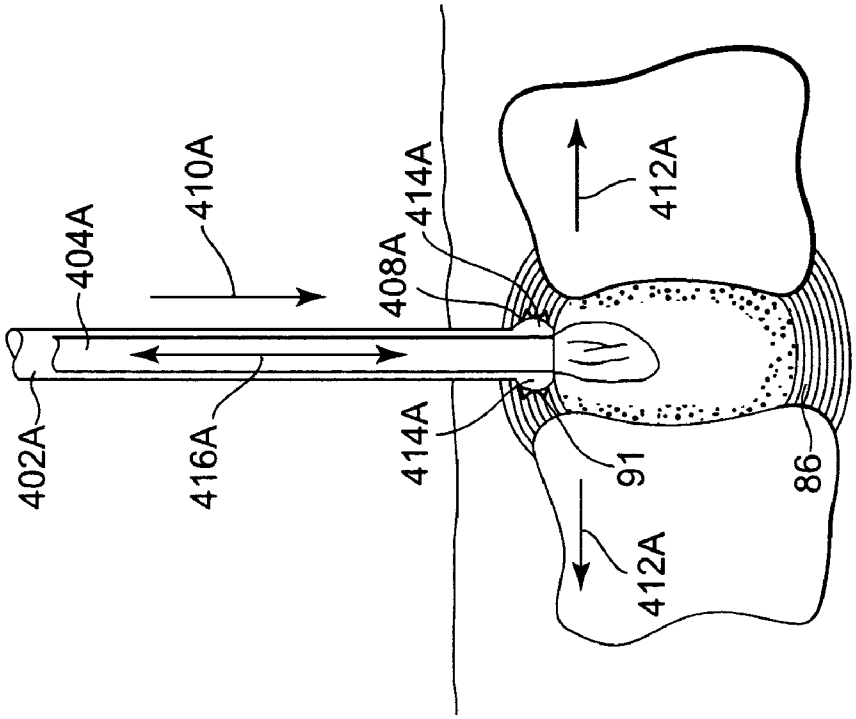

Fig. 18A

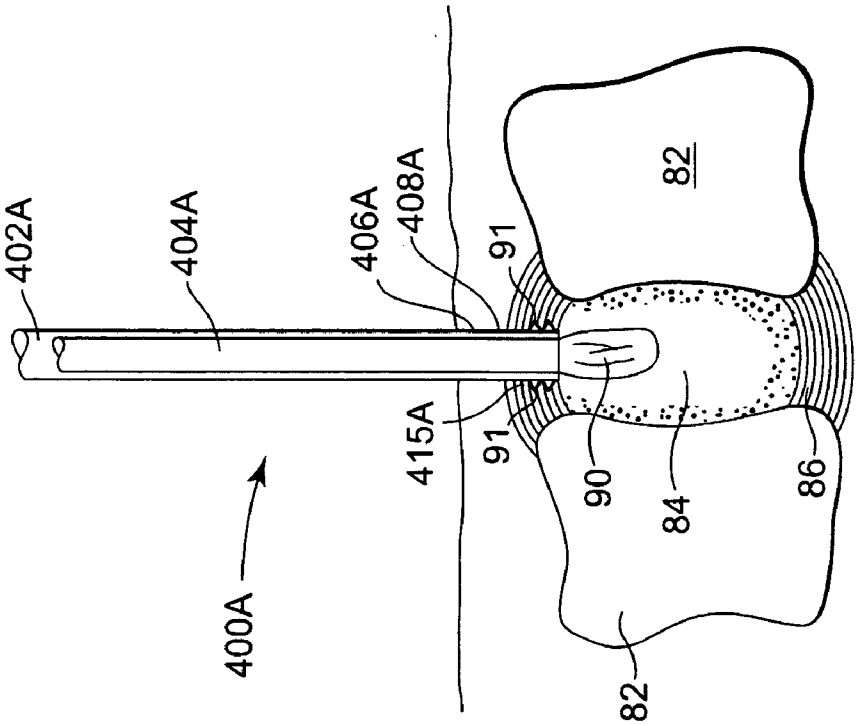

Fig. 17A

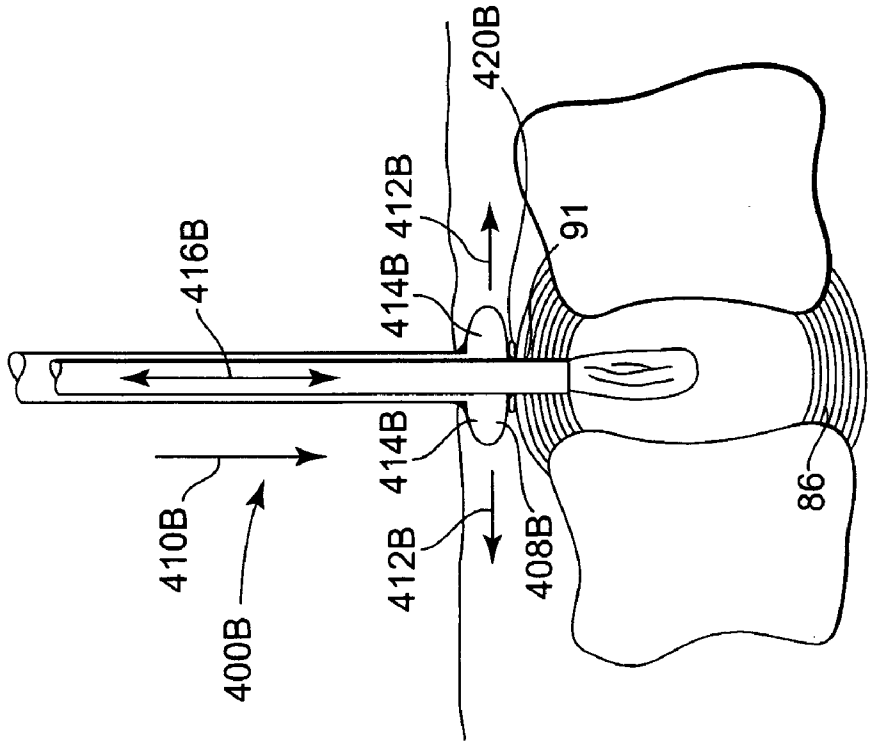

Fig. 18B

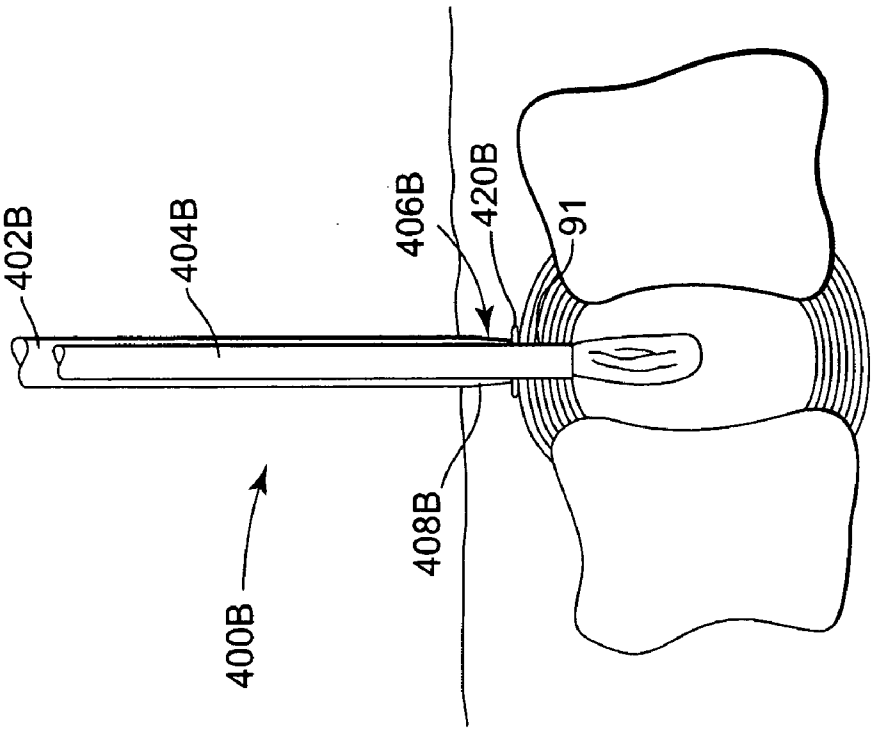

Fig. 17B

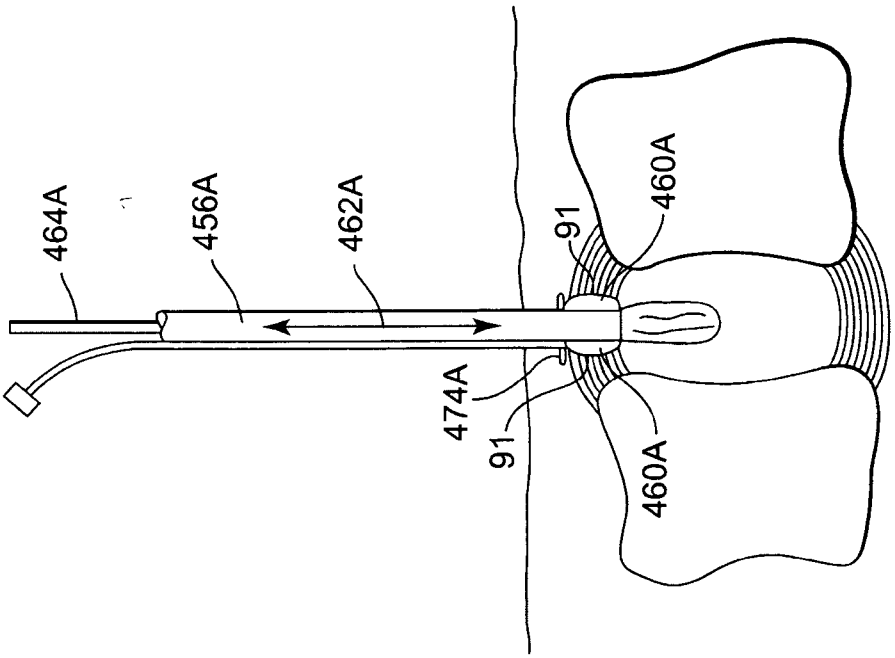

Fig. 20A

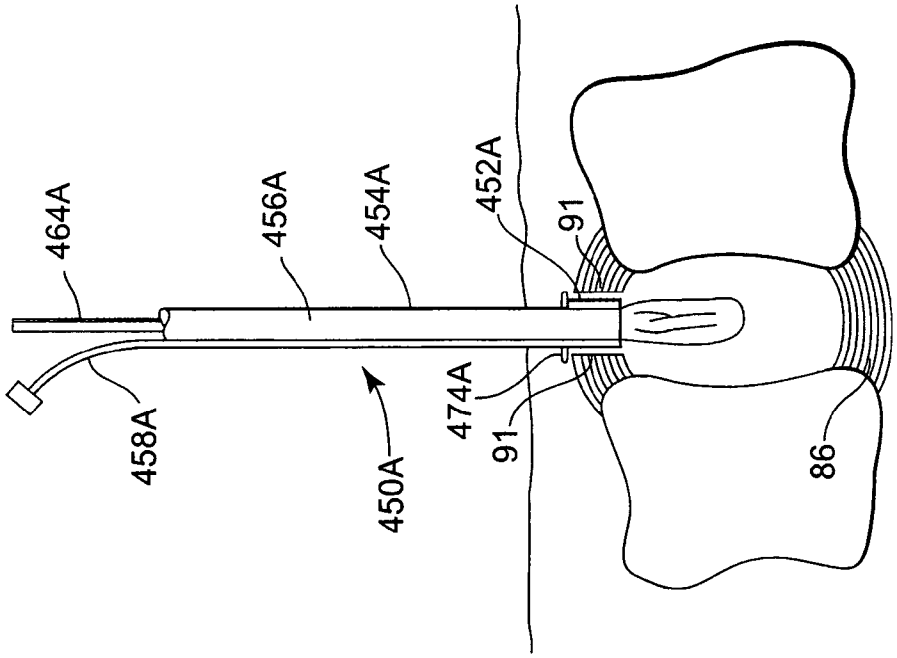

Fig. 19A

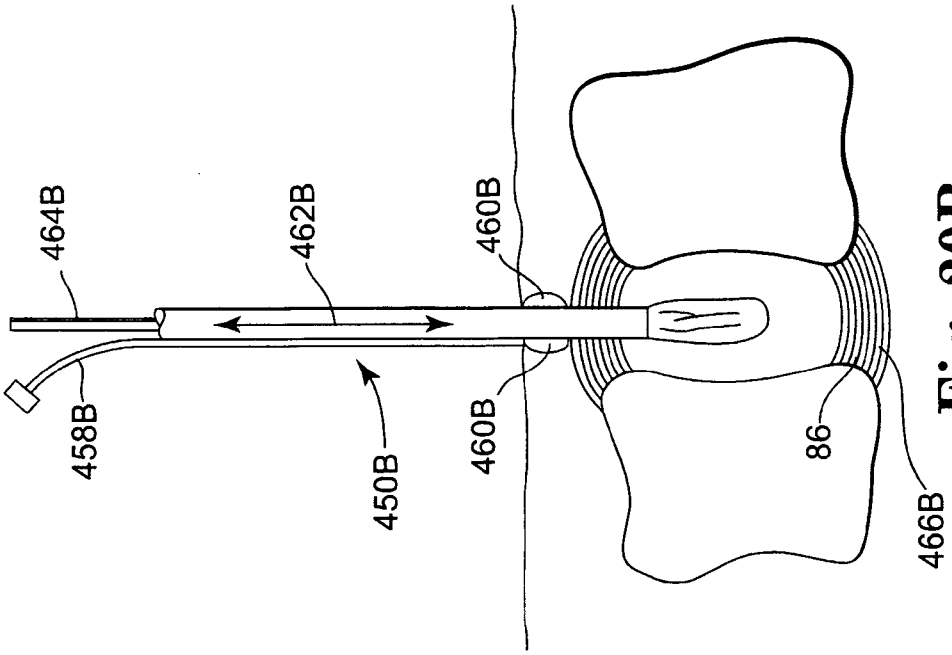

Fig. 20B

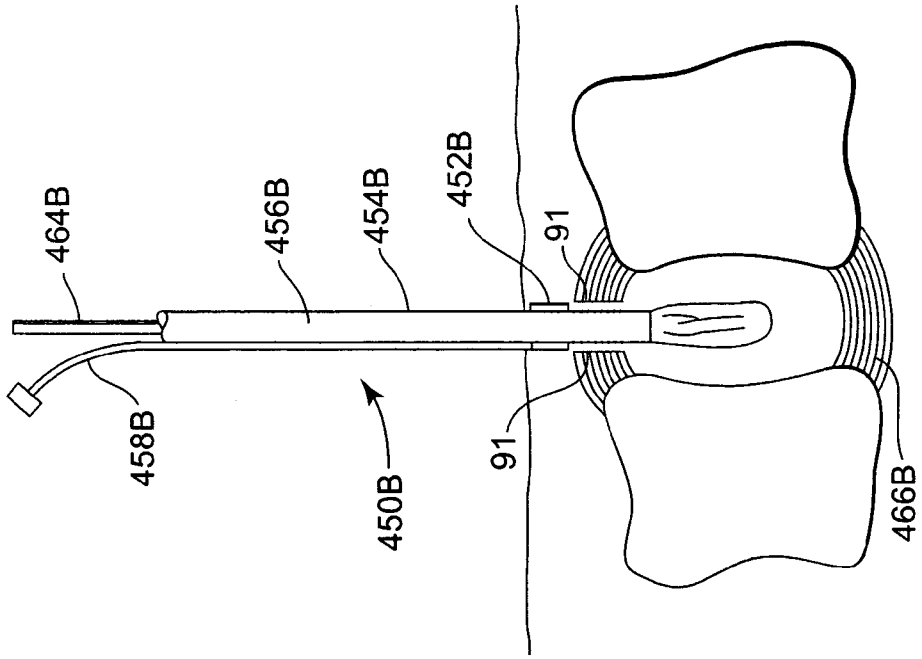

Fig. 19B

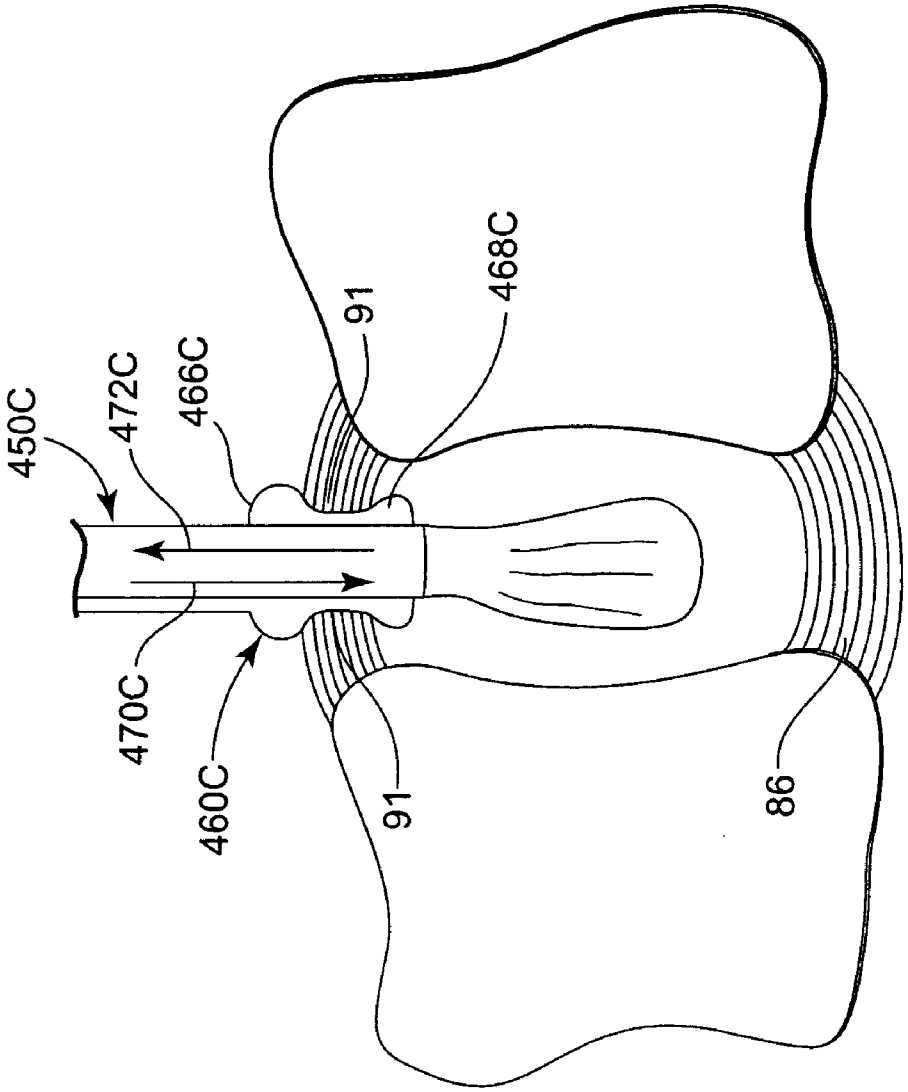

Fig. 20C

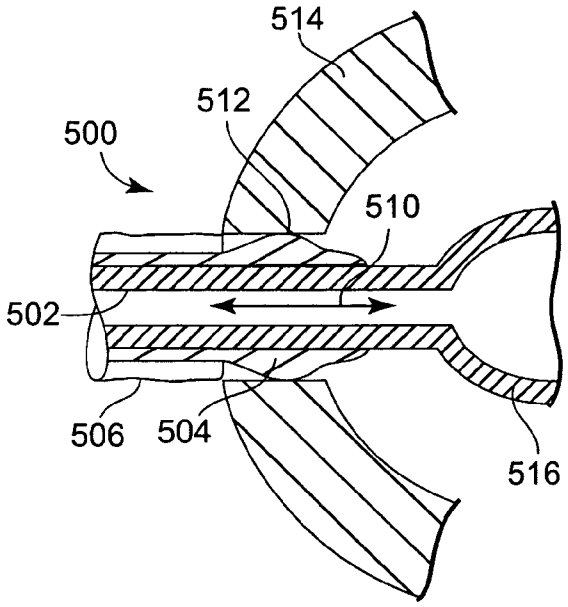

Fig. 21

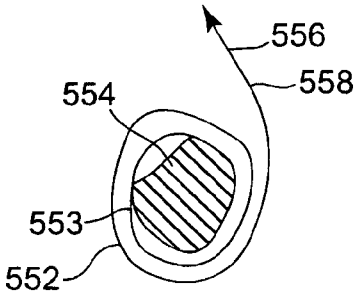

Fig. 23

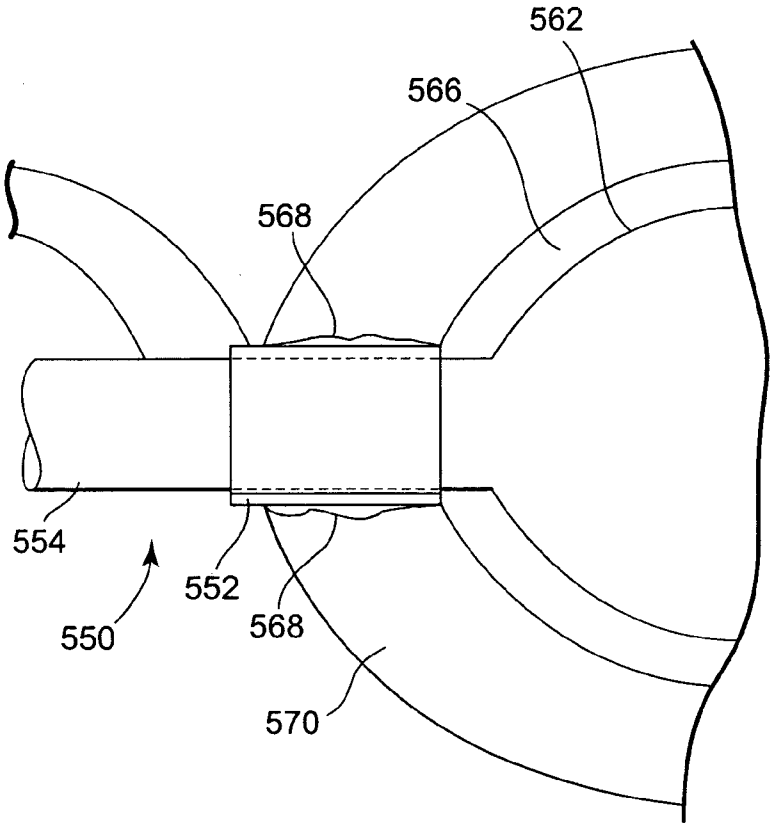

Fig. 22

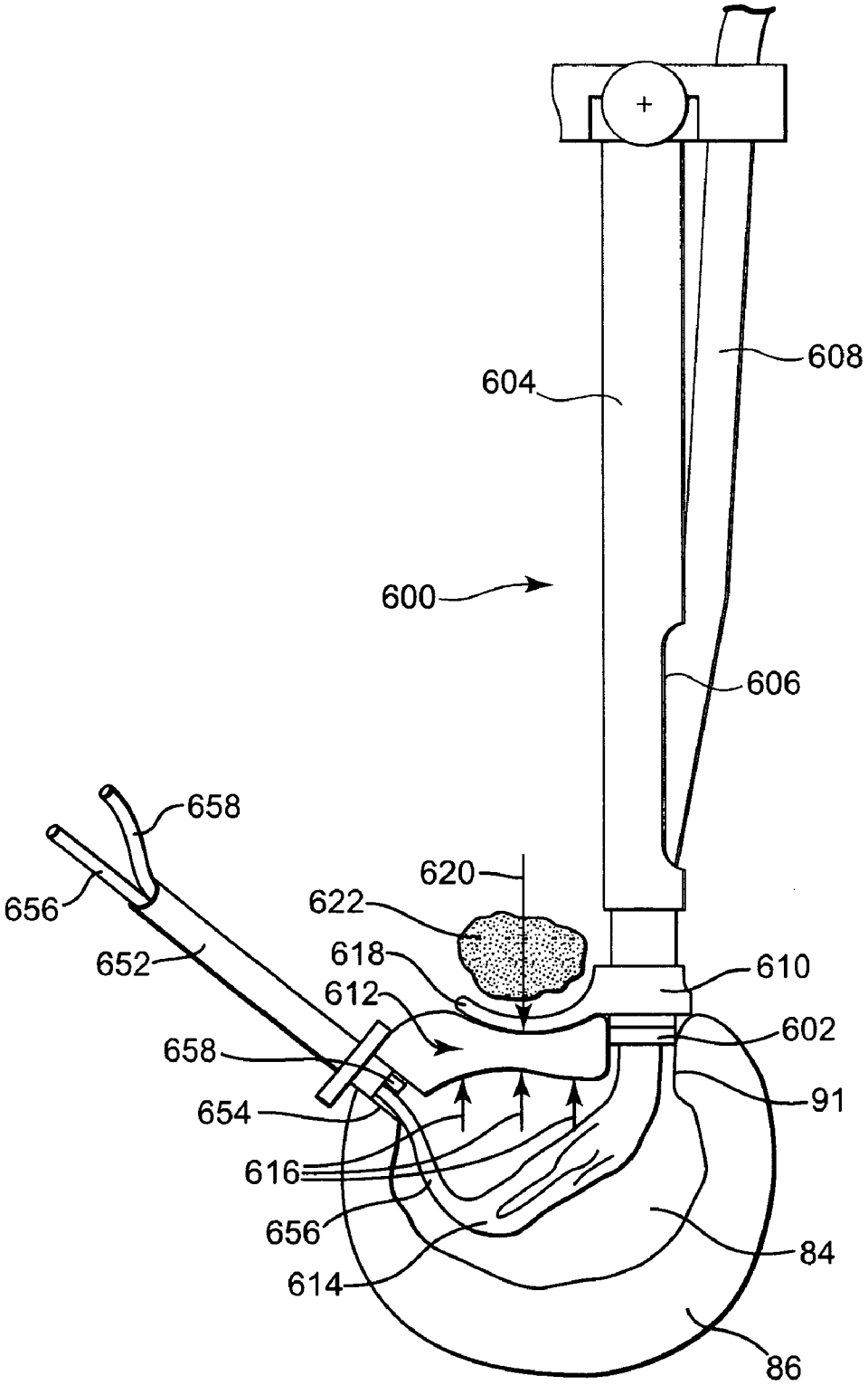
608
604
600
606
658
656
620
622
652
618
610
612
602
658
91
654
616
656
84
614
86

Fig. 24

Fig. 29

Fig. 30

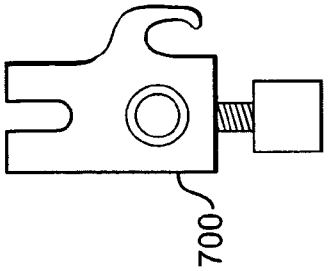

Fig. 33

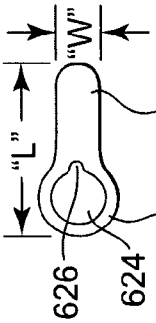

Fig. 25

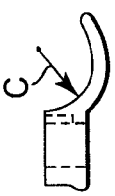

Fig. 26

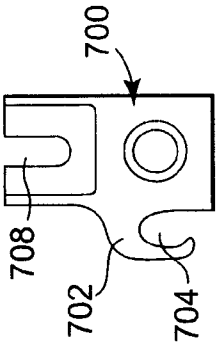

Fig. 31

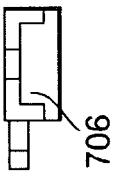

Fig. 32

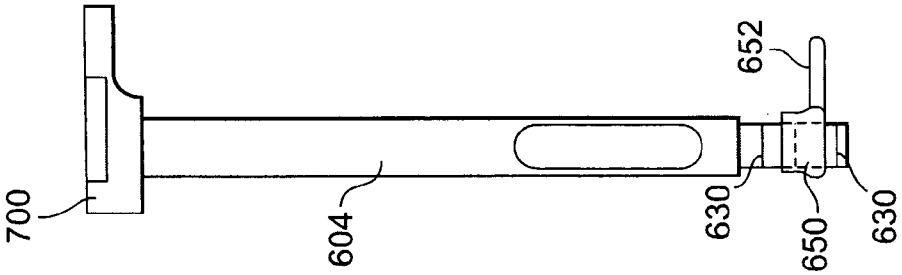

Fig. 28

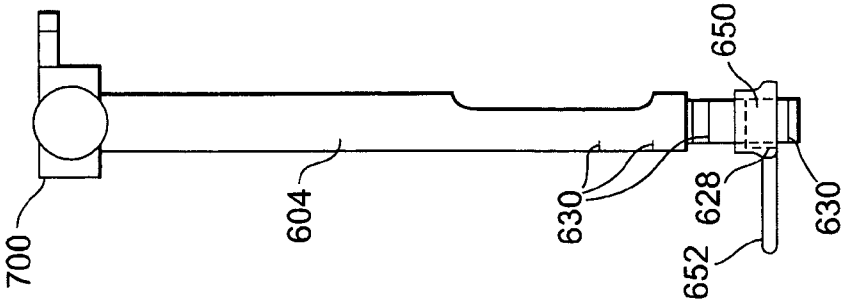

Fig. 27

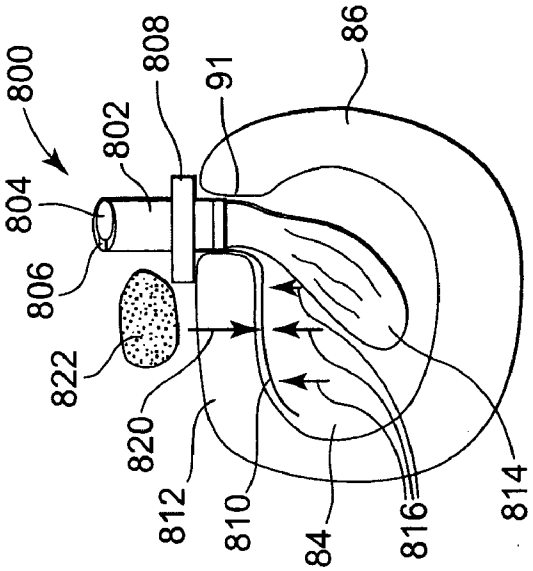
800
804
806
822
802
808
91
86
820
812
810
84
816
814

Fig. 35

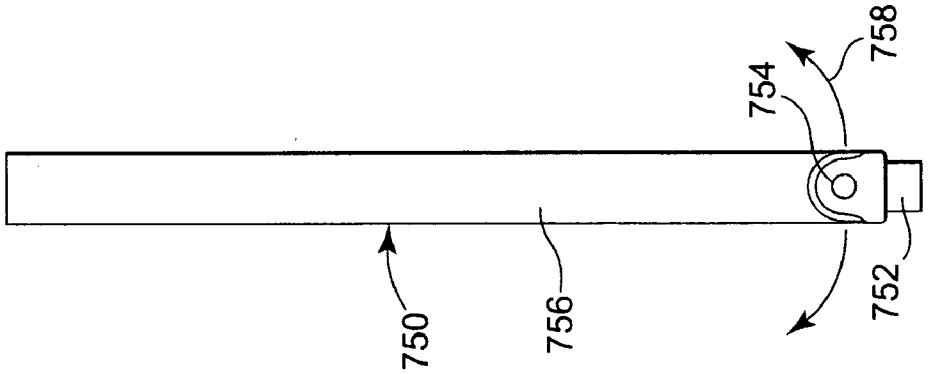
750
756
754
758
752

Fig. 34

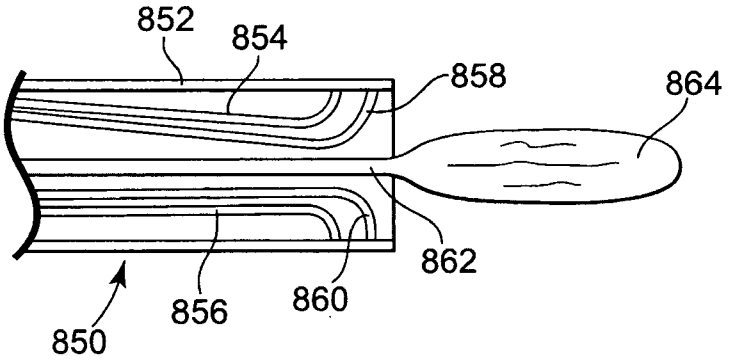
852
854
858
864
862
850
856
860

Fig. 36

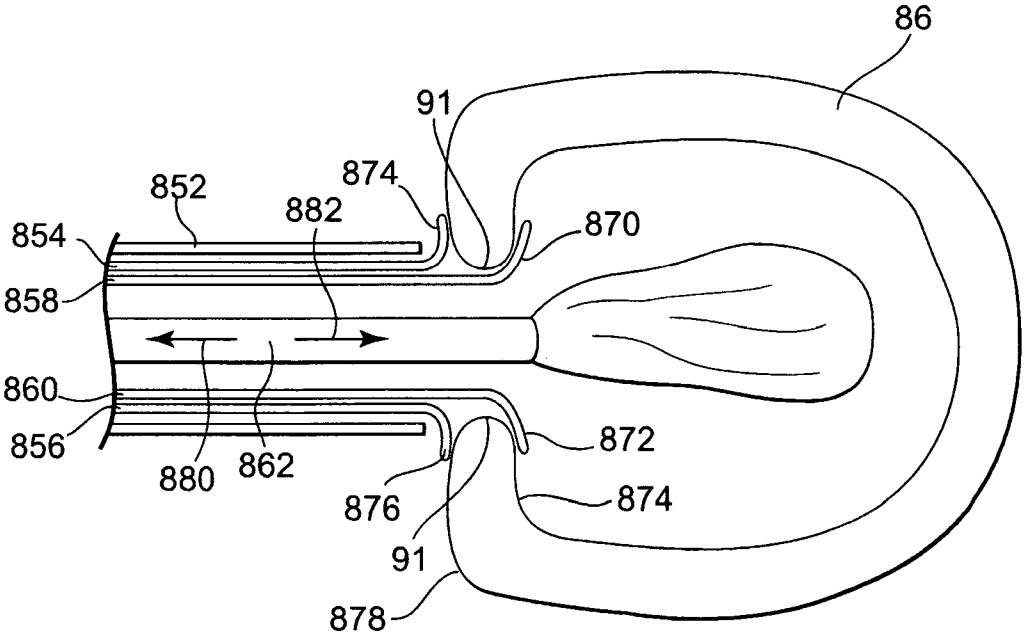
86
91
874
852
882
870
854
858
860
856
880
862
876
91
878
872
874

Fig. 37

CATHETER HOLDER FOR SPINAL IMPLANT

[0001] The present application claims the benefit of U.S. Provisional Application Ser. No. 60/677,273 entitled Catheter Holder for Spinal Implants filed May 3, 2005; U.S. Provisional Application Ser. No. 60/708,245 entitled Catheter Holder for Spinal Implants filed Aug. 15, 2005; U.S. Provisional Application Ser. No. 60/708,244 entitled Multi-Lumen Mold For Intervertebral Prosthesis And Method Of Using Same filed on Aug. 15, 2005, all of which are hereby incorporated by reference.

FIELD OF THE INVENTION

[0002] The present invention relates to a method and apparatus for filling an intervertebral disc space with an in situ curable biomaterial using a catheter holder to releasably secure the delivery mechanism to the patient.

BACKGROUND OF THE INVENTION

[0003] The intervertebral discs, which are located between adjacent vertebrae in the spine, provide structural support for the spine as well as the distribution of forces exerted on the spinal column. An intervertebral disc consists of three major components: cartilage endplates, nucleus pulposus, and annulus fibrosus. The central portion, the nucleus pulposus or nucleus, is relatively soft and gelatinous; being composed of about 70 to 90% water. The nucleus pulposus has a high proteoglycan content and contains a significant amount of Type II collagen and chondrocytes. Surrounding the nucleus is the annulus fibrosus, which has a more rigid consistency and contains an organized fibrous network of approximately 40% Type I collagen, 60% Type II collagen, and fibroblasts. The annular portion serves to provide peripheral mechanical support to the disc, afford torsional resistance, and contain the softer nucleus while resisting its hydrostatic pressure.

[0004] Intervertebral discs, however, are susceptible to a number of injuries. Disc herniation occurs when the nucleus begins to extrude through an opening in the annulus, often to the extent that the herniated material impinges on nerve roots in the spine or spinal cord. The posterior and posterio-lateral portions of the annulus are most susceptible to attenuation or herniation, and therefore, are more vulnerable to hydrostatic pressures exerted by vertical compressive forces on the intervertebral disc. Various injuries and deterioration of the intervertebral disc and annulus fibrosus are discussed by Osti et al., Annular Tears and Disc Degeneration in the Lumbar Spine, *J. Bone and Joint Surgery,* 74-B(**5**), (1982) pp. 678-682; Osti et al., Annulus Tears and Intervertebral Disc Degeneration, *Spine,* 15(8) (1990) pp. 762-767; Kamblin et al., Development of Degenerative Spondylosis of the Lumbar Spine after Partial Discectomy, *Spine,* 20(5) (1995) pp. 599-607.

[0005] Many treatments for intervertebral disc injury have involved the use of nuclear prostheses or disc spacers. A variety of prosthetic nuclear implants are known in the art. For example, U.S. Pat. No. 5,047,055 (Bao et al.) teaches a swellable hydrogel prosthetic nucleus. Other devices known in the art, such as intervertebral spacers, use wedges between vertebrae to reduce the pressure exerted on the disc by the spine. Intervertebral disc implants for spinal fusion are known in the art as well, such as disclosed in U.S. Pat. Nos. 5,425,772 (Brantigan) and U.S. Pat. No. 4,834,757 (Brantigan).

[0006] Further approaches are directed toward fusion of the adjacent vertebrate, e.g., using a cage in the manner provided by Sulzer. Sulzer's BAK® Interbody Fusion System involves the use of hollow, threaded cylinders that are implanted between two or more vertebrae. The implants are packed with bone graft to facilitate the growth of vertebral bone. Fusion is achieved when adjoining vertebrae grow together through and around the implants, resulting in stabilization.

[0007] Apparatuses and/or methods intended for use in disc repair have also been described but none appear to have been further developed, and certainly not to the point of commercialization. See, for instance, French Patent Appl. No. FR 2 639 823 (Garcia) and U.S. Pat. No. 6,187,048 (Milner et al.). Both references differ in several significant respects from each other and from the apparatus and method described below. For instance, neither reference teaches switching the flow of biomaterial between discrete operating parameters or methods of detecting ruptures in the mold. Further, neither reference teaches shunting an initial portion of a curing biomaterial in the course of delivering the biomaterial to the disc space.

[0008] Prosthetic implants formed of biomaterials that can be delivered and cured in situ, using minimally invasive techniques to form a prosthetic nucleus within an intervertebral disc have been described in U.S. Pat. No. 5,556,429 (Felt) and U.S. Pat. No. 5,888,220 (Felt et al.), and U.S. Patent Publication No. US 2003/0195628 (Felt et al.), the disclosures of which are incorporated herein by reference. The disclosed method includes, for instance, the steps of inserting a collapsed mold apparatus (which in a preferred embodiment is described as a "mold") through an opening within the annulus, and filling the mold to the point that the mold material expands with a flowable biomaterial that is adapted to cure in situ and provide a permanent disc replacement. Related methods are disclosed in U.S. Pat. No. 6,224,630 (Bao et al.), entitled "Implantable Tissue Repair Device" and U.S. Pat. No. 6,079,868 (Rydell), entitled "Static Mixer", the disclosures of which are incorporated herein by reference.

BRIEF SUMMARY OF THE INVENTION

[0009] The present invention relates to a method and apparatus for filling an intervertebral disc space with an in situ curable biomaterial using a catheter holder to releasably secure the delivery mechanism to the patient. The present catheter holder can be used, for example, to implant a prosthetic total disc, or a prosthetic disc nucleus, using minimally invasive techniques that leave the surrounding disc tissue substantially intact. The phrase intervertebral disc prosthesis is used generically to refer to both of these variations.

[0010] Minimally invasive refers to a surgical mechanism, such as microsurgical, percutaneous, or endoscopic or arthroscopic surgical mechanism, that can be accomplished with minimal disruption of the pertinent musculature, for instance, without the need for open access to the tissue injury site or through minimal incisions (e.g., incisions of less than about 4 cm and preferably less than about 2 cm). Such surgical mechanism are typically accomplished by the use of visualization such as fiber optic or microscopic visualization, and provide a post-operative recovery time

that is substantially less than the recovery time that accompanies the corresponding open surgical approach.

[0011] The present catheter holder is designed to position and secure the catheter in the desired position in an intervertebral disc space during and following polymer injection. The present catheter holder can be used to inject biomaterial with or without a mold.

[0012] In embodiments using a mold, the present catheter holder helps with insertion of the mold through the annulotomy and into the disc space created by the nuclectomy. By securing the catheter to the present catheter holder, the depth of insertion of the mold into the disc space can be accurately controlled during the delivery of biomaterial. In particular, the present catheter holder helps keep the mold from being drawn too far into the disc space or pushed too far out of the disc space during polymer injection. The present catheter holder can also receive other devices, such as a catheter cutter that cuts the catheter to the desired depth, imaging devices, and the like.

[0013] In one embodiment, the catheter holder includes a member having at least one catheter channel, a proximal end and a distal end. A mounting flange is attached near the proximal end of the member. In one embodiment, the mounting flange is connected, directly or indirectly, to a secondary holding device.

[0014] A surgical tool is preferably attached near the distal end of the member. In one embodiment, the surgical tool limits the depth of insertion into the intervertebral disc space. For example, the surgical tool may have a cross-sectional area greater than the cross-sectional area of the distal end of the member. The surgical tool is optionally releasably attached to the member. In one embodiment, a plurality of surgical tools having different geometric features from which the surgeon can select are provided.

[0015] In another embodiment, the surgical tool is a nerve guard ring or a blood vessel retractor. The nerve guard ring preferably has an asymmetrical support surface. The surgical tool can also serve to support the annulus during injection of the biomaterial. In one embodiment, the surgical tool is both a nerve guard ring and a support structure for the annulus. In another embodiment, the surgical tool is a support structure is delivered through the catheter to a located inside the annulus. After the biomaterial is delivered and/or at least partially cured, the support structure is removed through the catheter. Alternatively, the support structure can be detached from the member and retained in the annulus. In one embodiment, the support structure is bio-resorbable.

[0016] The member is preferably a hollow structure in fluid communication with the catheter channel. In one embodiment, the member includes an aperture in a side that is fluidly coupled to the catheter channel. The aperture is preferably configured to direct the catheter into the catheter channel at an acute angle.

[0017] A securing mechanism is provided that secures a catheter extending through the catheter channel to the catheter holder. In one embodiment, the securing mechanism is a catheter locking pin sized to fit into the catheter channel. The catheter locking pin has a distal end configured to compressively secure a catheter in the catheter channel. The catheter locking pin can optionally include a spring portion. In another embodiment, the securing mechanism is a compression fitting adapted to secure a catheter in the catheter channel.

[0018] The present invention is also directed to a catheter holder that can be secured to the patient with or without a secondary holding device. In one embodiment, an outer tube surrounds the catheter. A flexible material attaches the distal end of the catheter to the distal end of the outer tube. Displacement of the outer tube toward the distal end of the catheter causes the flexible material to expand outwardly away from the catheter. The expanded structure can be located in the annulotomy, inside the annulus, outside the annulus, or a combination thereof.

[0019] In another embodiment, the catheter holder includes an expandable bladder located near at least the distal end of the tubular member. A delivery tube is fluidly coupled to the expandable bladder. Again, the expanded bladder can be located in the annulotomy, inside the annulus, outside the annulus, or a combination thereof. In one embodiment, the expandable bladder is attached directly to a balloon catheter. In another embodiment, a sheath extends around a portion of the expandable bladder to limit the location and/or amount of expansion.

[0020] The present invention is also directed to an expandable coiled material located near the distal end of a tubular member. The proximal end of the expandable coiled material is attached to the tubular member near the distal end of the tubular member. The expandable coiled material has an outer diameter that contracts when a force directed away from the tubular member is applied to the distal end of the expandable coiled material. In operation, a tension force is applied to the coiled materials so it contracts around the catheter. The contracted coiled material is inserted into the annulotomy. The tension force is then release so the coiled material expands into the annulotomy, to secure the catheter thereto. When the procedure is competed, the tension force is again applied to the distal end of the coiled material to permit removal from the annulotomy.

[0021] The present method and apparatus include a radiopaque portion on the catheter holder to assist in imaging the position of the mold in the intervertebral disc space before, during and/or after delivery of biomaterial.

BRIEF DESCRIPTION OF THE SEVERAL VIEWS OF THE DRAWINGS

[0022] **FIG. 1** is an exemplary catheter and mold in accordance with the present invention.

[0023] **FIG. 2** is a side view of a catheter holder in accordance with the present invention.

[0024] **FIG. 3** is a top view of an extension on the catheter holder of **FIG. 2**.

[0025] **FIG. 4** is an enlarged view of a cut-out in the member of **FIG. 2**.

[0026] **FIG. 5** is a longitudinal-sectional view of an alternate cut-out in the member of **FIG. 2**.

[0027] **FIG. 6** is an enlarged view of the member of **FIG. 2**.

[0028] **FIG. 7** is a bottom view of the member of **FIG. 6**.

[0029] **FIG. 8** is a top view of an alternate catheter holder in accordance with the present invention.

[0030] **FIG. 9** is a side view of the catheter holder of **FIG. 8**.

[0031] **FIGS. 10 and 11** are side views of an alternate core with a spring region for use with the catheter holder of the present invention.

[0032] **FIGS. 12 and 13** are front and side views of an alternate catheter holder in accordance with the present invention.

[0033] **FIG. 14** is a side view of an alternate catheter holder in accordance with the present invention.

[0034] **FIG. 15** is a side view of an alternate catheter holder in accordance with the present invention.

[0035] **FIG. 16** is a side view of an alternate catheter holder in accordance with the present invention.

[0036] **FIGS. 17A and 18A** are side views of an alternate catheter holder engaged with the annulotomy in accordance with the present invention.

[0037] **FIGS. 17B and 18B** are side views of an alternate catheter holder engaged above the annulotomy in accordance with the present invention.

[0038] **FIGS. 19A and 20A** are side views of an alternate catheter holder engaged with the annulotomy in accordance with the present invention.

[0039] **FIGS. 19B and 20B** are side views of an alternate catheter holder engaged with the annulotomy in accordance with the present invention.

[0040] **FIG. 20C** is an enlarged side view of an expandable catheter holder positioned to straddle the annulotomy in accordance with the present invention.

[0041] FIGS. **21** is a cross-sectional view of an intervertebral disc with an alternate catheter holder in accordance with the present invention.

[0042] **FIG. 22** is a cross-sectional view of an intervertebral disc with an alternate catheter holder in accordance with the present invention.

[0043] **FIG. 23** is a side view of the strap of **FIG. 22**.

[0044] **FIG. 24** is a cross-sectional view of an intervertebral disc with an alternate catheter holder in accordance with the present invention.

[0045] **FIG. 25** is a top view of the surgical tool of **FIG. 24**.

[0046] **FIG. 26** is a side view of the surgical tool of **FIG. 24**.

[0047] **FIG. 27** is a front view of the catheter holder of **FIG. 24**.

[0048] **FIG. 28** is a side view of the catheter holder of **FIG. 24**.

[0049] **FIG. 29** is a top view of an alternate surgical tool in accordance with the present invention.

[0050] **FIG. 30** is a side view of the surgical tool of **FIG. 29**.

[0051] **FIGS. 31-33** illustrate various views of an alternate mounting flange in accordance with the present invention.

[0052] **FIG. 34** is a side view of a surgical tool insertion tool in accordance with the present invention.

[0053] **FIG. 35** illustrates a cross-sectional view of an intervertebral disc of an alternate catheter holder in accordance with the present invention.

[0054] **FIG. 36** is a side sectional view of an alternate catheter holder in accordance with the present invention.

[0055] **FIG. 37** is a cross-sectional view of the catheter holder of **FIG. 36** engaged with an annulus.

DETAILED DESCRIPTION OF THE INVENTION

[0056] **FIG. 1** illustrates an exemplary catheter **11** with mold or balloon **13** located on the distal end for use with the catheter holders of the present invention. In the illustrated embodiment, biomaterial **23** is delivered to the mold **13** through the catheter **11**. Secondary tube **11'** evacuates air from the mold **13** before, during and/or after the biomaterial **23** is delivered. The secondary tube **11'** can either be inside or outside the catheter **11**, or can enter the mold **13** from another side, such as in a multi-lumen mold. Various multi-lumen molds are disclosed in commonly assigned U.S. patent application Ser. No. _____, entitled Multi-Lumen Mold For Intervertebral Prosthesis And Method Of Using Same filed on the same date herewith (Attorney Docket No. 321297), which is hereby incorporated by reference. Alternatively, the catheter holder of the present invention can be used to inject biomaterial directly into the annulus of a patient, without the use of the mold or balloon **13**.

[0057] Surgical tool **25** is located on the catheter **11**. In the illustrated embodiment, the surgical tool **25** is a stop that limits the depth of insertion of the mold **13** into the annulus (see e.g., **FIG. 2**). The location of the stop **25** on the catheter **11** can either be fixed or adjustable. In one embodiment, the stop **25** includes a slip-fit mechanism to permit it to be moved to different locations along the catheter **11**.

[0058] **FIGS. 2-7** illustrate a first embodiment of a catheter holder **30** in accordance with the present invention. In the illustrated embodiment, the catheter holder **30** includes a member **32** with a mounting flange **34** on a proximal end **36** and a surgical tool **38** on a distal end **40**. The member **32** is preferably rigid or semi-rigid. The member **32** includes a catheter channel **42** adapted to receive catheter **44**. In an alternate embodiment, the mounting flange can be attached to the member **32** at a variety of locations. The member **32** can be constructed from a variety of radiopaque or radiolucent materials, such as metal, plastic or a variety of composites. In one embodiment, the member **32** is constructed from a radio-translucent plastic.

[0059] In the illustrated embodiment, the mounting flange **34** is attached to a secondary holding device **46** that is preferably attached, directly or indirectly through additional components, to some fixed structure, such as an operating table. In another embodiment, the secondary holding device **46** can include a handle that is gripped by a member of the operating staff to hold the catheter holder **30** in the desired location. In yet another alternate embodiment, the secondary holding device **46** is attached, directly or indirectly through

additional components, to the patient, such as for example, using a retractor, Steinmann pins, a harness fitted to the patient, or a variety of other devices.

[0060] As used herein, "secondary holding device" refers to a mechanism that can be, directly or indirectly through additional components, releasably attached to the patient, releasably attached to an external structure, gripped by the surgical staff, or any combination thereof. The secondary holding device **46** preferably that limits movement of the catheter holder **30** along at least the z-axis **68**, and more preferably along the x-axis, y-axis and z-axis. Although **FIG. 2** illustrates the secondary holding device **46** attached near the proximal end **36**, the secondary holding device **46** can attach to the catheter holder **30** anywhere along the exposed or accessible portion of the member **32**.

[0061] The proximal end **36** of the member **32** includes an opening **33** that communicates with the catheter channel **42**. The proximal end **36** can be used as an access port for performing other steps in the procedure. For example, the proximal end **36** can be used as a guide for performing the annulotomy **91** (aperture in the annulus **86**); performing the nuclectomy (removal of nucleus material **98**); evaluating the nuclectomy or the annulus **86**; imaging the annulus **86**; implanting the mold **13**; delivering the biomaterial; and/or cutting the catheter **44** as close to the neck of the mold **13** as possible. Disclosure related to evaluating the nuclectomy or the annulus is found in U.S. patent application Ser. No. 10/984,493, entitled "Multi-Sage Biomaterial Injection System for Spinal Implants, which is incorporated by reference.

[0062] The present invention is suitable for accessing the annulus **86** from any of the available access directions, including posterior, posterior lateral, lateral, anterior, or anterolateral. For procedures using the anterior approach, the distal end **40** is preferably longer than used for the posterior approaches.

[0063] In the illustrated embodiment, the mounting flange **34** also includes extension **48** designed to releaseably engage with the catheter **44**. As best illustrated in **FIG. 3**, the extension **48** in the present embodiment includes a slot **50** which is sized to loosely guide or to compressively engage with the catheter **44**. In one embodiment, the slot **50** forms a friction fit with the catheter **44**.

[0064] In the illustrated embodiment, the surgical tool **38** has a cross-sectional area greater than the cross-sectional area of the distal end **40** of the member **32**. The surgical tool **38** of **FIG. 2** is adapted to limit the depth of insertion of the member **32** into the annulus **86**. In the illustrated embodiment, the surgical tool **38** positions the member **32** against the annulus **86**. The surgical tool **38** can optionally serve as a nerve guard ring, a blood vessel retractor, and/or a tamp or support structure for the annulus **86** during injection of the biomaterial, as will be discussed in greater detail below.

[0065] As used herein, "surgical tool" refers to one or more of a stop, a tamp or support structure, a blood vessel retractor, and/or a nerve guard ring that attaches near distal end of the member of the present catheter holder. The stop limits the depth of insertion of the catheter into the annulus. The tamp or support structure typically supports an annulus during and/or after delivery of biomaterial. The blood vessel retractor is typically used for anterior or anterolateral entry. The nerve guard ring is typically used for posterior or posterolateral entry. The surgical tools are preferably interchangeable, permitting the surgeon to select one or more while performing the procedure. Various embodiments of the surgical tool are disclosed herein.

[0066] As best illustrated in **FIGS. 6 and 7**, the nerve guard ring **52** includes a support surface **54** with an opening **56** along a portion of its perimeter **58**. The nerve guard ring **52** preferably can rotate around the distal end **40** of the member **32**, thereby eliminating the need for right-hand and left-hand versions of the present catheter holder **30**.

[0067] The position of the nerve guard ring **52** along the distal end **40** of the member **32** is preferably adjustable. In one embodiment, the nerve guard ring **52** can move a distance "d" to adjust how far the distal end **40** penetrates into the annulus **86**. By adjusting the position of the nerve guard ring **52**, the surgeon can precisely control how far bottom edge **41** of the member **32** penetrates into the annulus **86**. The bottom edge **41** then can be used as a reference surface or datum for positioning the catheter **44** relative to the catheter holder **30**, and in particular, for positioning the optional mold **90** in the cavity **84**.

[0068] In the illustrated embodiment, the bottom edge **41** of the member **32** has a contour corresponding to the desired shape of the implant. As the mold **90** is filed with biomaterial, it expands against the bottom edge **41**, causing it and biomaterial **23** to conform to the shape of the bottom edge **41**. When the biomaterial is cured, it will retain the shape of the bottom edge **41**. Alternatively, the bottom edge **41** can be flat or a variety of other shapes.

[0069] Turning back to **FIG. 2**, an annulotomy or opening **91** is formed in the annulus **86** of intervertebral disc **64** located between opposing vertebrate **82**. The surgical tool **38** limits how far the member **32** penetrates into the patient **60**, and in particular, into the annulus **86** and the cavity **84** formed by the nuclectomy. The intervertebral disc **64** and/or tissue **62** adjacent to the intervertebral disc **64** provides a force **66** acting on the surgical tool **38** that limits movement of the catheter holder **30** along the z-axis **68**. The tissue surrounding the distal end **40** assists in limiting movement of the distal end **40** along the x-axis and y-axis that intersect the distal end **40**.

[0070] The secondary holding device **46** limits movement of the proximal end **36** of the catheter holder **30** along the z-axis **68** and preferably along the x-axis and y-axis that intersects the proximal end **36**. In one embodiment, the secondary holding device **46** provides a counter acting force **70** generally along the z-axis. In the illustrated embodiment, the forces **66** and **70** assist in retaining the catheter holder **30** relative to the patient **60**.

[0071] In one embodiment, the member **32** is preferably sufficiently rigid so as to not bend or buckle when subjected to the forces **66** and **70**. In another embodiment, the member **32** bends elastically a small amount when subjected to the forces **66** and **70** to applying more constant pressure on the patient **60**. In the illustrated embodiment, the forces **66** and **70** are parallel and opposing. In another embodiment, the forces **66** are **70** are co-axial. The forces **66**, **70** do not need to be co-axial or parallel to secure the catheter holder **30** to the patient **60**. For example, the forces **66**, **70** can be at an acute angle relative to each other.

[0072] In the illustrated embodiment, member **32** is a hollow tube with a cut-out **72** near the distal end **40**. The

cut-out **72** is preferably located on the same side of the member **32** as the extension **48**. The catheter **44** is inserted into cut-out **72**, preferably at an acute angle, through the catheter channel **42** and into the intervertebral disc **64** of the patient **60**. Since the position of the catheter holder **30** is fixed relative to the patient **60**, the depth to which the catheter **44** penetrates into cavity **84** formed in the annulus **86** can be set and fixed by securing the catheter **44** to the catheter holder **30**.

[**0073**] In one embodiment, the catheter **32** is secured to the slot **50** of the extension **48**. In another embodiment, catheter locking pin or core **92** is inserted along the z-axis **68** into the proximal end **36** of the catheter holder **30**. The tapered tip **94** of the core **92** compresses the catheter **44** against edge **100** in the cut-out **72**. In one embodiment, the tapered tip **94** may include a cutting edge. The core **92** can be fixedly engaged with the catheter holder **30** using a cap **93** that has threads that mate with threads **106** on the proximal end **36**. The cap **93** can be used to set the proper locking tension on the catheter **44**.

[**0074**] Once the catheter **44** is maneuvered along catheter channel **42** to the proper depth within the intervertebral disc **64**, biomaterial is delivered through the catheter **44** to mold **90** located in the cavity **84** or directly into the cavity **84** formed in the annulus **86**. Various implant procedures, implant molds, and biomaterials related to intervertebral disc replacement suitable for use with the present invention are disclosed in U.S. Pat. No. 5,556,429 (Felt); U.S. Pat. No. 6,306,177 (Felt, et al.); U.S. Pat. No. 6,248,131 (Felt, et al.); U.S. Pat. No. 5,795,353 (Felt); U.S. Pat. No. 6,079,868 (Rydell); U.S. Pat. No. 6,443,988 (Felt, et al.); U.S. Pat. No. 6,140,452 (Felt, et al.); U.S. Pat. No. 5,888,220 (Felt, et al.); U.S. Pat. No. 6,224,630 (Bao, et al.), and U.S. patent application Ser. Nos. 10/365,868 and 10/365,842, all of which are hereby incorporated by reference.

[**0075**] In some embodiments, the annulus **86** can itself serve as a suitable mold for receiving the biomaterial. Optionally, the interior surface of the annular shell can be treated or covered with a suitable material in order to enhance its integrity and use as a mold. Although the embodiments herein disclose the use of a mold mounted on the end of the catheter, the present catheter holders are equally applicable to the delivery of biomaterial directly into the annulus.

[**0076**] The catheter holder and method of the present invention can also be used to repair other joints, including diarthroidal and amphiarthroidal joints. Examples of suitable diarthroidal joints include the ginglymus (a hinge joint, as in the interphalangeal joints and the joint between the humerus and the ulna); throchoides (a pivot joint, as in superior radio-ulnar articulation and atlanto-axial joint); condyloid (ovoid head with elliptical cavity, as in the wrist joint); reciprocal reception (saddle joint formed of convex and concave surfaces, as in the carpo-metacarpal joint of the thumb); enarthrosis (ball and socket joint, as in the hip and shoulder joints) and arthrodia (gliding joint, as in the carpal and tarsal articulations). The present catheter holders can also be used for a variety of other procedures, including those listed above.

[**0077**] As best illustrated in **FIG. 4**, the cut-out **72** in the member **32** optionally includes a flared edge **100** designed to minimize damage to the catheter **44**. **FIG. 5** illustrates an alternate embodiment of the member **32** with an angled groove **102** located at the lower end of the cut-out **72**. The groove **102** preferably has a diameter slightly larger than the diameter of the catheter **44**. The cut-out **72** is preferably configured to create a smooth transition of the catheter **44** into the catheter channel **42**.

[**0078**] The core **92** can optionally be used to cut the catheter **44** after the biomaterial is cured. In one embodiment, the core **92** is rotated or advanced further into the member **32**, severing catheter **44** and cured biomaterial at a location near the edge **100**. For example, the threads **106** can be used to advance the core **92** toward the edge **100**. Alternatively, the core **92** is removed and the catheter **44** is manually cut near the edge **100**.

[**0079**] **FIGS. 8 and 9** illustrate an alternate catheter holder **120** in accordance with the present invention. As best illustrated in **FIG. 8**, mounting flange **122** is offset from extension **124** by approximately 90 degrees. Extension **124** includes a slot **126** sized to receive a catheter. The catheter holder **120** includes a core **128** which is positioned in the center of the member **130**, as discussed above. Once the core **128** is positioned in the member **130**, bail **132** is rotated around pivot point **134** along the direction **136** to secure proximal end **138** of the core **128** within the member **130**. The tapered end **140** of the core **128** secures a catheter against the edge **142** of the cut-out **143**, as discussed above.

[**0080**] Distal end **40** of the member **130** includes surgical tool **144** as discussed above. An optional radiopaque marker band **146** can be located on the distal end **40** of the member **130**. The radiopaque band **146** can optionally be used for imaging during the implant procedure.

[**0081**] **FIGS. 10 and 11** illustrate front and side views of an alternate core **150** for use in the member **130** of **FIG. 9**. The core **150** includes a spring region **152** that assists in applying more constant pressure on the catheter. In the illustrated embodiment, the spring region **152** is a serpentine or corrugated region formed in the core **150**. In an alternate embodiment, the core **150** can be a two-piece telescoping structure with an internal spring to provide a predictable spring force. The spring region **152** is particularly useful in accommodating for tolerances and materials when working with plastic parts.

[**0082**] **FIGS. 12 and 13** illustrate an alternate catheter holder **200** in accordance with the present invention. The catheter holder **200** includes a member **202** with an upper tubular member **204** and a lower tubular member **206**. Mounting flange **208** is preferably attached to the upper tubular member **204** or the member **202**. Surgical tool **210** is attached at the distal end **212** of the lower tubular member **206**. Catheter **214** is inserted through the tubular members **204** and **206** as discussed above. Tubular member **204** preferably includes a compression member **216** to secure the catheter **214** relative to the length of the catheter holder **200**.

[**0083**] **FIG. 14** illustrates an alternate catheter holder **250** in accordance with the present invention. The catheter holder **250** includes a curved member **252** with an upper tubular member **254** and a lower tubular member **256**. Mounting flange **258** is attached to the upper tubular member **254**. The mounting flange **258** preferably includes an opening **264** co-axially aligned with lower tubular member **256**. The opening **264** and the lower tubular member **256** are

provided to receive and position other devices used in the implant procedure, such as imaging catheters, catheter cutters, and the like.

[0084] Surgical tool **260** is attached to the lower tubular member **256**. Catheter **262** is inserted through the tubular members **254**, **256** and into the patient as discussed above. Compression member **266** is preferably provided on the upper tubular member **254** to secure the catheter **262** relative to the length of the catheter holder **250**.

[0085] **FIG. 15** is a side view of an alternate catheter holder **300** in accordance with the present invention. Member **302** includes a tubular portion **304** on the proximal end **308** and tubular portion **306** on the distal end **310**. The tubular portions **304**, **306** are provided to receive and position other devices used in the implant procedure, such as imaging catheters, catheter cutters, and the like.

[0086] Mounting flange **312** is attached to the tubular member **304** on the proximal end. Surgical tool **314** is attached to the tubular member **306** on the distal end **310**. Catheter guide **316** is positioned at an angle relative to the member **302**. Extension **318** attaches the distal end **306** of the member **302** to the catheter guide **316**. Compression screw **320** is provided on the catheter guide **316** to secure a catheter relative to the catheter holder **300**.

[0087] **FIG. 16** is a side view of an alternate catheter holder **350** in accordance with the present invention. Catheter locking pin **352** is positioned through the tubular portion **354** of the member **356**. Distal end **358** of the catheter locking pin **352** compressively engages with catheter **360** against edge **362** of the member **356** to secure it in place relative to the catheter holder **350**. Threaded member **364** can be used to advance the catheter locking pin **352** toward the catheter **360**, such as for example to fix the position of the catheter **360** relative to the catheter holder **350**, or to cut the catheter **360** and cured biomaterial contained within using a sharpened distal end **358**.

[0088] **FIGS. 17A and 18A** illustrate an alternate catheter holder **400**A that can optionally be used without a secondary holding device. The catheter **404**A is secured to the annulus **86**, and in particular, within the annulotomy **91**.

[0089] Outer sleeve **402**A surrounds the catheter **404**A. Distal end **406**A of the outer sleeve **402**A is attached to the catheter **404**A by a flexible material **408**A. The flexible material **408**A can be rubber, silicone, or any other elastically or plastically expandable material. In one embodiment, the flexible material **408**A forms a continuous structure, such as for example a disc or a toroid. In another embodiment, the flexible material **408**A can be a multi-lobed structure, which can optionally be constructed from metal.

[0090] As best illustrated in **FIG. 18A**, the outer tube **402**A is displaced in the direction **410**A relative to the catheter **404**A, causing the flexible material **408**A to deform in an outward direction **412**A. Protrusions **414**A expand into the edges of the annulotomy **91** in the annulus **86**, forming an interference or compression fit. The present embodiment secures the catheter holder **400**A from movement in either direction along the axis **416**A, preferably without a secondary holding device.

[0091] In one embodiment, the external surface of the protrusions **414**A can optionally include a variety of surface features **415**A to releasably engage with the edge of the annulotomy **91**, such as for example ridges, spikes, and the like. The surface features serve to more securely anchor the protrusions **414**A to the annulotomy **91**. A variety of the embodiments disclosed herein can also benefit from the use of such surface features. In one embodiment, the resulting protrusions **414**A operate as a surgical tools such as a stop, discussed in other embodiments herein.

[0092] **FIGS. 17B and 18B** illustrate an alternate catheter holder **400**B in which the protrusions **414**B are deployed subcutaneous, outside of the annulus **86**. In this embodiment, the surgical tool **420**B is positioned against the edge of the annulotomy **91** establishes a frame of reference for the procedure, providing greater accuracy. The outer tube **402**B is displaced in the direction **410**B relative to the catheter **404**B as discussed above, causing the flexible material **408**B to deform in an outward direction **412**B. The present embodiment secures the catheter holder **400**B from movement in either direction along the axis **416**B, preferably without a secondary holding device. In one embodiment, the resulting protrusions **414**B operate as a surgical tools making the stop **420**B unnecessary, discussed in other embodiments herein.

[0093] **FIGS. 19A and 20A** illustrate an alternate catheter holder **450**A that can optionally be used without a secondary holding device. The catheter **464**A is secured to the annulus **86**, and in particular, within the edges of the annulotomy **91**. Expandable bladder **452**A is fitted on external surface **454**A of tubular member **456**A. Delivery tube **458**A is in fluid communication with the expandable bladder **452**A.

[0094] The expandable bladder **452**A is positioned within the annulotomy **91**. As best illustrated in **FIG. 20A** a fluid is delivered to the expandable bladder **452**A through the delivery tube **458**A, causing it to inflate. The inflated bladder **460**A forms an interference or compression fit within the annulotomy **91**. The inflated bladder **460**A serves to secure the tubular member **456**A along either direction of axis **462**A, using the edge of the annulotomy **91** and the surgical tool **474**A as the frame of reference for the procedure. Delivery catheter **464**A, or a variety of other devices, can be inserted through the tubular member **456**A. In an alternate embodiment, the bladder **452**A can be located directly on the catheter **464**A, obviating the tubular member **456**A. In one embodiment, the inflated bladder **460**A operates as a surgical tool such as a stop, making the surgical tool **474**A unnecessary.

[0095] **FIGS. 19B and 20B** illustrate an alternate catheter holder **450**B in accordance with the present invention. The expandable bladder **452**B is positioned outside the annulotomy **91**. As best illustrated in **FIG. 20B** a fluid is delivered to the expandable bladder **452**B through the delivery tube **458**B, causing it to inflate. The inflated bladder **460**B is deployed subcutaneous, outside of the annulus **86**. The inflated bladder **460**B forms an interference or compression fit within the tissue outside of the annulus **86** to secure the tubular member **456**B along either direction of axis **462**B. The inflated bladder **460**B can alternately be located in the annulotomy **91**, outside the annulus **86**, inside the annulus **86**, or a combination thereof. In one embodiment, the inflated bladder **460**B operates as a surgical tools such as a stop.

[0096] **FIG. 20C** illustrates an alternate interface of the inflated bladder **460**C with the annulus **86**. The inflated

bladder **460**C extends across the depth of the annulotomy **91** so that a portion **466**C is located outside the annulus **86** and a portion **468**C is located inside the annulus **86**. In the embodiment of **FIG. 20C**, the inflated bladder **460**C has a generally hourglass shape. The portion **466**C limits movement of the catheter holder **450**C in the direction **470**C and the portion **468**C limits movement of the catheter holder **450**C in the direction **472**C.

[**0097**] **FIG. 21** is a side sectional view of an alternate catheter holder **500** in accordance with the present invention. Catheter **502** is optionally fitted with an expandable bladder **504**. Sheath **506** can optionally be slid over the delivery tube **502** and expandable bladder **504** to control the location and degree of expansion of the bladder **504**. In the illustrated embodiment, the expanded bladder **504** engaged with edges of the annulotomy **512** in the annulus **514**. The embodiment of **FIG. 21** is particularly useful when biomaterials are injected into the annulus **512** without mold **516**, since the bladder **504** not only fixes the catheter holder **500** relative to the annulus **86**, it also seals the annulotomy **91** to allow biomaterial to be injected under pressure without leaking out. As discussed above, the inflated bladder **504** limits movement of the catheter holder **500** along either direction of the axis **510**, making it unnecessary to secure the proximal end of the catheter **502** to the surgical table or other fixed structure.

[**0098**] **FIGS. 22 and 23** illustrate an alternate catheter holder **550** in accordance with the present invention. Expandable strap **552** is positioned around the catheter **554**. Proximal end **553** of the expandable strap **552** is preferably attached to the catheter **554**.

[**0099**] As best illustrated in **FIG. 23**, when force **556** is applied to distal end **558** of this strap **552**, the portion surrounding the catheter **554** contracts concentrically inward. The mold **562** attached to the distal end of the catheter **554** is then positioned in the cavity **566** formed inside annulus **570**. When the force **556** is released, the strap **552** expands to its substantially original shape to form a friction or interference fit with the annulotomy **568** in the annulus **570**. When the procedure is completed, the surgeon reapplies the force **556** to contract the strap **552**, and the strap **552** is removed from the annulotomy.

[**0100**] **FIG. 24** is a cross-sectional view of an annulus **86** engaged with an alternate catheter holder **600** in accordance with the present invention. Distal end **602** of member **604** includes cut-out **606** that permits catheter **608** to be inserted into the annular cavity **84** formed in the annulus **86**. In the illustrated embodiment, surgical tool **610** operates to support region **612** of the annulus **86** and to retract and protect blood vessels and nerves. In the illustrated embodiment, the surgical tool **610** can also operate as a nerve guard ring.

[**0101**] In operation, as a fluid, such as a curable biomaterial, is delivered through the catheter **608**, the mold **614** inflates within the cavity **84**. Alternatively, the biomaterial is injected directly into the annulus **86** without use of the mold **614**. In some applications, the inflated mold **614** or the biomaterial located in the annulus **86** exert pressure **616** on the annulus **86**, such as region **612**. Portion **618** of the surgical tool **610** provides a counteracting force **620** that restrains deformation of the annulus **86**. In particular, the portion **618** prevents the annulus **86** from impinging on spinal column **622**. The surgical tool **610** is particularly useful when the portion **612** of the annulus **86** is diseased or otherwise weakened, and hence, prone to distend or deform when subjected to the pressure of the biomaterial.

[**0102**] Depending upon the size of the portion **618**, the surgical tool **610** can optionally be positioned in the patient before the member **604**. **FIG. 34** illustrates one possible embodiment of an insertion tool **750** in accordance with the present invention. Member **754** forms an articulating connection between distal end **752** and the member **756**. Member **754** articulates through at least one degree of freedom, and preferably two or more degrees of freedom. In the illustrated embodiment, member **754** is a pivot point around which the distal end **752** rotates along arc **758** relative to the member **754**. The distal end **752** mechanically engages with a surgical tool, such as the surgical tools in **FIGS. 26 and 30**.

[**0103**] In the embodiment of **FIG. 24** the surgical tool **610** is preferably releasably attached to the distal end **602** of the member **604**, such as by a snap-fit arrangement, a mechanical release or a variety of other mechanisms. In particular, the surgeon inserts the surgical tool **610** into the patient against the annulus **86**. The opening **624** (see **FIGS. 25-26**) on the surgical tool **610** is aligned with the annulotomy **91**. The catheter holder **600** is then inserted into the annulotomy **91** so that the distal end **602** engaged with the opening **624** on the surgical tool **610**. Once the mold **614** or the annulus **86** is filled with curable biomaterial, the sequence is reversed to remove the surgical tool **610** from the patient.

[**0104**] In an alternate embodiment, second catheter holder **652** is optionally engaged with posterolateral annulotomy **654**, in accordance with the present invention. In the illustrated embodiment, the catheter holder **652** includes a second lumen **656** fluidly coupled to the mold **614** and a visualization device **658**, such as an endoscope.

[**0105**] The second catheter holder **652** provides a second discrete access port **654** into the annulus **86** that optionally can be used to form the annular cavity **84**, to image any phase of the procedure, to deliver the biomaterial to the mold **614** through the second lumen **656**, to draw a vacuum on the mold **614** before, during and/or after delivery of the biomaterial, and to secure the prosthesis in the intervertebral disc space during and after delivery of the biomaterial. Various multi-lumen molds and mechanisms for securing a prosthesis in the annulus are disclosed in U.S. Provisional application entitled Multi-Lumen Mold for Intervertebral Prosthesis and Method of Using Same, filed on the same date herewith (attorney docket no. 319570), which is hereby incorporated by reference.

[**0106**] As best illustrated in **FIGS. 25 and 26**, the surgical tool **610** includes an opening **624** sized to engage with distal end **602** of the member **604**. An optional anti-rotation feature **626**, such as a notch, is provided to engage with a corresponding feature **628** on the distal end **602**. The portion **618** includes a width "W", a length "L" and an optional curvature "C". The desired width, length and curvature can vary with the patient. In another embodiment, the portion **618** has a curvilinear shape with varying radii of curvature. In another embodiment, the portion **618** has a constant radius of curvature. The present invention includes a kit having a plurality of interchangeable surgical tools **610** having a variety of widths, lengths, and curvatures.

[**0107**] **FIGS. 27 and 28** illustrate front and side views of the member **604** of **FIG. 24** with an alternate surgical tool

650 engaged with distal end 602. The member 604 is preferably constructed from a radio-translucent plastic, with a plurality of radiopaque markers 630 attached or embedded therein. Alternatively, the member 604 is constructed from a radiopaque material. The radiopaque markers 630 can have a variety of shapes and can be arranged in a variety of configurations, such as for example the straight lines arranged at fixed intervals illustrated in **FIGS. 27 and 28**.

[0108] As best illustrated in **FIGS. 29 and 30**, the surgical tool 650 includes the same opening 624 and anti-rotation feature 626 as the surgical tool 610. The surgical tools 610 and 650 are preferably interchangeable with the distal end 602 of the member 604.

[0109] **FIGS. 31-33** illustrate an alternate mounting flange 700 in accordance with the present invention. Extension 702 includes a slot 704 sized to receive a catheter 608. Recess 706 and slot 708 are preferably configured to engage with a mounting arm attached to a fixed location, such as the surgical table. Once such mounting arm is a component of a micro-discectomy system sold by Medtronic under the trade name MetrX®.

[0110] **FIG. 35** is a side view of an alternate catheter holder 800 in accordance with the present invention. Member 802 includes a primary lumen 804 and a secondary lumen 806. In the illustrated embodiment, 804 is a working lumen and 806 is a visualization lumen. The relative sizes of the lumens 804, 806 are schematically illustrated and can vary with the application.

[0111] Surgical tool 808 engages with the annulus 86 adjacent to the annulotomy 91. The location of the surgical tool 808 along the member 802 is optionally adjustable with a snap-fit sliding motion. A second surgical tool, reinforcing member 810 is delivered to the cavity 84 into the annulus 86 preferably through the member 802. The reinforcing member 810 operates to support region 812 of the annulus 86. The reinforcing member 810 is optionally a shaped memory metal, such as for example nitinol.

[0112] In operation, as a fluid, such as a curable biomaterial, is delivered through the catheter 804, the mold 814 inflates within the cavity 84. In some applications, the inflated mold 814 exerts pressure 816 on the annulus 86, such as at the region 812. Alternatively, in an embodiment where the biomaterial is injected directly into the annulus 86 without the use of a mold 814, the biomaterial exerts pressure 816 on the region 812.

[0113] The surgical tool 810 provides a counteracting force 820 and/or distributes the force 816 over a larger surface area to temporarily reinforce the region 812 of the annulus 86. In particular, the surgical tool 810 prevents the annulus 86 from protruding into the spinal cord 822. The surgical tool 810 is particularly useful when the portion 812 of the annulus 86 is diseased or otherwise weakened, and hence, prone to distend or deform when subjected to the pressure of the inflated mold 814. Preferably after the biomaterial is at least partially cured, the reinforcing member 810 is removed from the annulus 86 through the member 802. In an alternate embodiment, the surgical tool 810 can engage with an exterior surface of the annulus 86, such as illustrated in **FIG. 24**.

[0114] In another embodiment, the surgical tool 810 is released from the member 802 and remains in the annulus 86 after the procedure is completed. The surgical tool 810 is preferably release from the member 802 after the biomaterial is at least partially cured. In one embodiment, the surgical tool 810 is constructed from a bio-resorbable material.

[0115] **FIG. 36** is a side sectional view of an alternate catheter holder 850 in accordance with the present invention. The member 852 includes one or more outer engagement wires 854, 856 and one or more inner engagement wires 858, 860. Catheter 862 and mold 864 are preferably located in center region 866 of member 852.

[0116] As illustrated in **FIG. 37**, member 852 is located adjacent to annulus 86. The inner engagement wires 858, 860 are extended from the member 852 so that curved portions 870, 872 engage with inner surface 874 of the annulus 86 adjacent to the annulotomy 91. The outer engagement wires 854, 856 are also extended from the member 852 so that curved portions 874, 876 engage with outer surface 878 of the annulus 86 adjacent to the annulotomy. The engagement wires 858, 860 prevent the catheter holder 850 from moving in a direction 880, while the engagement wires 854, 856 prevent movement in direction 882. The catheter holder 850 can be used with or without a secondary holding device. The catheter 862 can be positioned in and secured to the member 852 using any of the methods disclosed herein.

[0117] The catheter holder of the present invention can also be used with the method of implanting a prosthetic nucleus disclosed in a commonly assigned U.S. Patent Application entitled Lordosis Creating Nucleus Replacement Method And Apparatus (Attorney Docket No. 318946), filed on the same date herewith, the disclosure of which are incorporated herein by reference.

[0118] Patents and patent applications disclosed herein, including those cited in the Background of the Invention, are hereby incorporated by reference. Other embodiments of the invention are possible. Many of the features of the various embodiments can be combined with features from other embodiments. In particular, any of the present catheter holder can be combined with the surgical tools, multi-lumen molds and/or entry ports discussed herein. It is to be understood that the above description is intended to be illustrative, and not restrictive. Many other embodiments will be apparent to those of skill in the art upon reviewing the above description. The scope of the invention should, therefore, be determined with reference to the appended claims, along with the full scope of equivalents to which such claims are entitled.

What is claimed is:

1. A catheter holder attachable to a secondary holding device for the in situ formation of a prosthesis in an intervertebral disc space of a patient using minimally invasive techniques, the catheter holder comprising:

a member having at least one catheter channel, a proximal end and a distal end configured to extend into the intervertebral disc space, the distal end having a distal opening in fluid communication with the catheter channel;

a mounting flange attached to the member and attachable to the secondary holding device;

at least one surgical tool located near the distal end of the member; and

a securing mechanism adapted to secure a catheter extending through the catheter channel to the catheter holder.

2. The catheter holder of claim 1 wherein the proximal end comprises a proximal opening in fluid communication with the catheter channel.

3. The catheter holder of claim 1 comprising an aperture in a side of the member fluidly coupled to the catheter channel configured to direct a catheter into the catheter channel at an acute angle.

4. The catheter holder of claim 1 wherein the securing mechanism comprises a catheter locking pin sized to fit into the catheter channel, the catheter locking pin having a distal end configured to compressively secure a catheter in the catheter channel.

5. The catheter holder of claim 4 wherein the catheter locking pin comprises a spring structure.

6. The catheter holder of claim 1 wherein the securing mechanism comprises a compression fitting adapted to secure a catheter in the catheter channel.

7. The catheter holder of claim 1 comprising a catheter with a mold attached to a distal end thereof, the mold having at least one lumen extending through the catheter holder.

8. The catheter holder of claim 1 wherein the surgical tool comprises a plurality of interchangeable stops each adapted to limit a depth of insertion into the intervertebral disc space.

9. The catheter holder of claim 8 wherein the plurality of interchangeable stops comprise two or more stops having different profiles.

10. The catheter holder of claim 1 wherein the surgical tool comprises one or more of a support structure, a nerve guard ring, a blood vessel retractor or a tamp.

11. The catheter holder of claim 10 wherein the support structure comprising a plurality of interchangeable support structures having two or more different profiles.

12. The catheter holder of claim 10 wherein the support structure comprises a shape adapted to engage with an external surface of an annular body located in the intervertebral disc space.

13. The catheter holder of claim 10 wherein the support structure comprises a shape adapted to extend into an intervertebral disc located in the intervertebral disc space.

14. The catheter holder of claim 10 wherein the support structure is adapted to be deposited in an intervertebral disc.

15. The catheter holder of claim 10 wherein the support structure comprises a bio-resorbable material.

16. The catheter holder of claim 1 comprising at least one retractable surgical tool extendable through the catheter channel into the intervertebral disc space.

17. The catheter holder of claim 16 wherein the retractable surgical tool comprises a shaped memory metal.

18. The catheter holder of claim 1 wherein the surgical tool comprises a plurality of engagement wires located in the member and adapted to project from the distal end of the member to engage with an intervertebral disc.

19. The catheter holder of claim 1 comprising a second catheter holder having a distal end configured to extend into the intervertebral disc space.

20. The catheter holder of claim 19 comprising a visualization device located in the second catheter holder.

21. The catheter holder of claim 1 wherein the member comprises one of a radiopaque material or a radio-translucent material.

22. The catheter holder of claim 1 wherein the catheter channel includes at least one visualization device.

23. The catheter holder of claim 1 comprising:

a catheter located in the catheter channel; and

a flexible material attaching the distal end of the member to the catheter, such that displacement of the member relative to the catheter causes the flexible material to expand outwardly away from the distal end.

24. The catheter holder of claim 1 comprising:

an outer tube surrounding the member; and

a flexible material attaching the distal end of the member to the distal end of the outer tube, such that displacement of the outer tube toward the distal end of the member causes the flexible material to expand outwardly away from the distal end of the member.

25. The catheter holder of claim 1 comprising:

an expandable bladder located near at least the distal end of the member; and

a delivery tube fluidly coupled to the expandable bladder.

26. The catheter holder of claim 25 comprising a sheath extending around a portion of the expandable bladder.

27. The catheter holder of claim 1 comprising an expandable coiled material having a proximal end attached to the tubular member near the distal end, the expandable coiled material having an outer diameter that contracts when a force directed away from the tubular member is applied to a distal end of the expandable coiled material.

28. A catheter holder for the in situ formation of a prosthesis in an intervertebral disc space of a patient using minimally invasive techniques, the catheter holder comprising:

a catheter having a distal end;

an outer tube have a distal end surrounding the catheter; and

a flexible material attaching the distal end of the catheter to the distal end of the outer tube, such that displacement of the outer tube relative to the catheter causes the flexible material to expand outwardly away from the catheter.

29. A method for the in situ formation of a prosthesis in an intervertebral disc space of a patient using minimally invasive techniques, the method comprising the steps of:

positioning a distal end of a member in the intervertebral disc space, the distal end having a distal opening in fluid communication with a catheter channel in the member;

engaging at least one surgical tool located on the distal end of the member with the intervertebral disc space;

securing the member to a secondary holding device;

inserting a catheter through a catheter channel into the intervertebral disc space; and

securing the catheter to the member.

30. The method of claim 29 comprising the step of selecting a surgical tool from a plurality different surgical tools each engageable with the distal end of the member.

31. The method of claim 29 wherein the step of securing the catheter to the member comprises inserting a catheter locking pin into an opening at the proximal end of the member so that distal end of the catheter locking pin compressively secures the catheter in the catheter channel.

32. The method of claim 29 comprising the step of delivering a curable biomaterial through the catheter to the intervertebral disc space.

33. The method of claim 29 comprising the step of delivering a curable biomaterial through the catheter to a mold located in the intervertebral disc space.

34. The method of claim 29 comprising locating radiopaque markers on the member.

35. The method of claim 29 comprising the steps of:

attaching a flexible material to the distal end of the member and to the catheter; and

displacing the member relative to the catheter so that the flexible material expands outwardly away from the distal end.

36. The method of claim 29 comprising the steps of:

positioning an outer tube around the member; and

attaching the distal end of the member to a distal end of the outer tube using a flexible material; and

displacing the outer tube toward the distal end of the member so that the flexible material expands outwardly away from the distal end of the member.

37. The method of claim 29 comprising the steps of:

locating an expandable bladder proximate the distal end of the member; and

delivering a fluid to the bladder so that the expanded bladder forms an interference fit with the patient.

38. The method of claim 37 comprising locating a sheath around the expandable bladder to selectively control the expansion thereof.

39. The method of claim 29 comprising the steps of:

attaching a proximal end of an expandable coiled material to the tubular member near the distal end;

applying a force directed away from the tubular member to contract the coiled material;

positioning the expandable coiled material in the patient; and

releasing the force so that the coiled material expands and forms an interference fit with the patient.

40. The method of claim 29 comprising the steps of:

inserting a surgical tool through the member and into the intervertebral disc space;

delivering a biomaterial to the intervertebral disc space; and

retracting the surgical tool from the intervertebral disc space.

* * * * *