US006923814B1

(12) **United States Patent**
Hildebrand et al.

(10) **Patent No.: US 6,923,814 B1**
(45) **Date of Patent: Aug. 2, 2005**

(54) **SYSTEM AND METHODS FOR CERVICAL SPINAL FUSION**

(75) Inventors: **Bryan D. Hildebrand**, Whitefish, MT (US); **Patrick Miles**, San Diego, CA (US); **Scot Martinelli**, San Diego, CA (US); **Jared Arambula**, San Diego, CA (US); **Matthew Curran**, Carlsbad, CA (US); **Eric Kovach**, Carlsbad, CA (US); **Troy Woolley**, San Diego, CA (US); **Jeff Castleberry**, Escondido, CA (US)

(73) Assignee: **Nuvasive, Inc.**, San Diego, CA (US)

(*) Notice: Subject to any disclaimer, the term of this patent is extended or adjusted under 35 U.S.C. 154(b) by 0 days.

(21) Appl. No.: **10/283,429**

(22) Filed: **Oct. 29, 2002**

Related U.S. Application Data

(60) Provisional application No. 60/336,501, filed on Oct. 30, 2001.

(51) **Int. Cl.**[7] **A61B 17/88**
(52) **U.S. Cl.** **606/99**
(58) **Field of Search** 606/99, 104, 61, 606/205, 206, 207; 623/17.11, 17.16; 600/104, 600/106, 137; 24/326, 335, 350, 502, 504, 24/505, 515, 516, 518; 269/47, 48, 49, 60, 269/77, 78, 87.3, 91, 98, 100, 108, 188, 189, 269/217, 218, 256, 261, 264

(56) **References Cited**

U.S. PATENT DOCUMENTS

803,692	A	*	11/1905	Hill	81/113
3,486,505	A	*	12/1969	Morrison	606/90
3,518,993	A	*	7/1970	Blake	606/142
3,604,487	A	*	9/1971	Gilbert	81/443
3,745,995	A		7/1973	Kraus	128/82.1
3,848,601	A		11/1974	Ma et al.	128/305
4,026,304	A		5/1977	Levy	128/419
4,026,305	A		5/1977	Brownlee et al.	128/419
4,646,738	A		3/1987	Trott	606/170
4,657,550	A		4/1987	Daher	623/17
4,743,256	A		5/1988	Brantigan	623/17
4,781,591	A		11/1988	Allen	
4,834,757	A		5/1989	Brantigan	
4,877,020	A	*	10/1989	Vich	606/86
4,878,915	A		11/1989	Brantigan	623/17
4,932,975	A		6/1990	Main et al.	623/17
4,961,740	A		10/1990	Ray et al.	606/61
4,962,766	A		10/1990	Herzon	128/741
5,026,373	A		6/1991	Ray et al.	606/61

(Continued)

FOREIGN PATENT DOCUMENTS

CA 2015507 1/1991

(Continued)

OTHER PUBLICATIONS

Alleyne, Cargill H., et al., "Current and future approaches to lumbar disc surgery: A literature review", *Medscape Orthopedics & Sports Medicine, 1,* [www.medscape.com/Medscape/OrthoSportsMed/1997/v01.n11/.../mos3057],(1997).

(Continued)

Primary Examiner—Eduardo C. Robert
Assistant Examiner—David Comstock
(74) *Attorney, Agent, or Firm*—Jonathan Spangler

(57) **ABSTRACT**

A system for performing spinal fusion between adjacent cervical vertebrae, including an implant and an introducer system, and related methods.

7 Claims, 13 Drawing Sheets

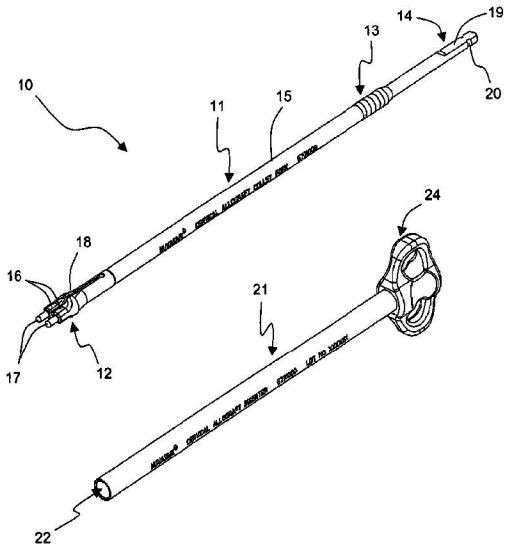

GLOBUS EX. 1027

U.S. PATENT DOCUMENTS

5,055,104	A		10/1991	Ray	606/61
5,062,845	A		11/1991	Kuslich et al.	606/80
5,092,572	A		3/1992	Litwak et al.	269/328
5,133,717	A		7/1992	Chopin	606/61
5,133,755	A		7/1992	Brekke	623/16
5,171,278	A		12/1992	Pisharodi	623/17
5,192,327	A	*	3/1993	Brantigan	623/17.11
5,217,497	A		6/1993	Mehdian	623/17
5,269,785	A		12/1993	Bonutti	606/80
5,284,153	A		2/1994	Raymond et al.	128/741
5,290,494	A		3/1994	Coombes et al.	264/41
5,300,076	A		4/1994	Leriche	606/73
5,304,210	A		4/1994	Crook	607/51
5,306,307	A		4/1994	Senter et al.	623/17
5,306,309	A	*	4/1994	Wagner et al.	623/17.16
5,322,505	A		6/1994	Krause et al.	604/24
5,334,205	A		8/1994	Cain	
5,336,223	A		8/1994	Rogers	606/61
5,364,400	A		11/1994	Rego, Jr. et al.	606/72
5,395,372	A		3/1995	Holt et al.	606/61
5,397,363	A		3/1995	Gelbard	623/17
5,405,391	A		4/1995	Henderson et al.	623/17
5,413,602	A		5/1995	Metz-Stavenhagen	623/17
5,425,772	A		6/1995	Brantigan	623/17
5,431,658	A		7/1995	Moskovich	606/99
5,443,514	A		8/1995	Steffee	623/17
5,443,515	A		8/1995	Cohen et al.	623/17
5,445,639	A		8/1995	Kuslich et al.	606/80
5,454,811	A		10/1995	Huebner	606/60
5,458,638	A		10/1995	Kuslich et al.	623/17
5,484,403	A		1/1996	Yoakum et al.	604/59
5,489,308	A	*	2/1996	Kuslich et al.	623/17.11
5,514,180	A	*	5/1996	Heggeness et al.	623/17.16
5,522,879	A		6/1996	Scopelianos	623/1
5,522,899	A		6/1996	Michelson	623/17
5,524,624	A		6/1996	Tepper et al.	128/660.3
5,527,312	A		6/1996	Ray	606/61
5,534,030	A		7/1996	Navarro et al.	623/17
5,540,688	A		7/1996	Navas	606/61
5,545,222	A		8/1996	Bonutti	623/11
5,562,736	A		10/1996	Ray et al.	623/17
5,565,005	A		10/1996	Erickson et al.	607/51
5,571,190	A		11/1996	Ulrich et al.	623/17
5,571,192	A		11/1996	Schonhoffer	623/17
5,593,409	A		1/1997	Michelson	606/61
5,609,636	A		3/1997	Kohrs et al.	623/17
5,611,800	A		3/1997	Davis et al.	606/61
5,611,810	A	*	3/1997	Arnold et al.	606/185
5,632,747	A		5/1997	Scarborough et al.	606/79
5,645,598	A		7/1997	Brosnahan	623/17
5,653,761	A		8/1997	Pisharodi	623/17
5,653,762	A		8/1997	Pisharodi	623/17
5,658,336	A		8/1997	Pisharodi	623/17
5,658,337	A		8/1997	Kohrs et al.	623/17
5,662,710	A		9/1997	Bonutti	623/11
5,665,122	A		9/1997	Kambin	623/17
5,669,909	A		9/1997	Zdeblick et al.	606/61
5,676,703	A		10/1997	Gelbard	623/17
5,683,394	A		11/1997	Rinner	606/86
5,683,400	A	*	11/1997	McGuire	606/96
5,683,464	A		11/1997	Wagner et al.	623/17
5,690,629	A		11/1997	Asher et al.	606/61
5,700,264	A		12/1997	Zucherman et al.	606/79
5,700,291	A		12/1997	Kuslich et al.	623/17
5,700,292	A		12/1997	Marguiles	623/17
5,702,449	A		12/1997	McKay	623/17.16
5,702,451	A		12/1997	Biedermann et al.	623/17
5,702,453	A		12/1997	Rabbe et al.	623/17
5,702,454	A		12/1997	Baumgartner	623/17
5,702,455	A		12/1997	Saggar	623/17.15
5,703,451	A		12/1997	Yamamichi	318/492
5,707,373	A	*	1/1998	Sevrain et al.	606/72
5,711,957	A		1/1998	Patat et al.	424/224
5,716,415	A	*	2/1998	Steffee	623/17.16
5,720,748	A		2/1998	Kuslich et al.	606/80
5,720,751	A	*	2/1998	Jackson	606/86
5,728,159	A	*	3/1998	Stroever et al.	623/23.5
5,741,261	A		4/1998	Moskovitz et al.	606/79
5,755,797	A		5/1998	Baumgartner	623/17
5,766,252	A	*	6/1998	Henry et al.	623/17.16
5,772,661	A		6/1998	Michelson	606/61
5,775,331	A		7/1998	Raymond et al.	128/741
5,779,642	A		7/1998	Nightengale	600/461
5,782,830	A	*	7/1998	Farris	606/61
5,782,919	A		7/1998	Zdeblick et al.	623/17
5,785,710	A		7/1998	Michelson	606/61
5,797,909	A		8/1998	Michelson	606/61
5,800,549	A		9/1998	Bao et al.	623/17
5,800,550	A		9/1998	Sertich	623/17
5,814,084	A		9/1998	Grivas et al.	623/16
5,851,208	A		12/1998	Trott	606/80
5,865,845	A	*	2/1999	Thalgott	623/17.16
5,865,848	A		2/1999	Baker	623/17
5,885,299	A		3/1999	Winslow et al.	606/99
5,888,219	A		3/1999	Bonutti	623/11
5,888,224	A		3/1999	Beckers et al.	623/17
5,893,890	A		4/1999	Pisharodi	623/17
5,904,719	A		5/1999	Errico et al.	623/17
5,910,315	A		6/1999	Stevenson et al.	424/422
5,954,769	A		9/1999	Rosenlicht	623/16
5,968,098	A		10/1999	Winslow	623/17
5,993,474	A	*	11/1999	Ouchi	606/206
6,004,326	A		12/1999	Castro et al.	606/99
6,008,433	A	*	12/1999	Stone	623/20.14
6,015,436	A		1/2000	Schunhuffer	623/17
6,033,405	A		3/2000	Winslow et al.	606/61
6,039,761	A		3/2000	Li et al.	623/17
6,042,582	A		3/2000	Ray	606/61
6,045,580	A		4/2000	Scarborough et al.	623/17
6,048,342	A		4/2000	Zucherman et al.	606/61
6,063,088	A		5/2000	Winslow	606/61
6,083,225	A		7/2000	Winslow et al.	606/61
6,096,080	A		8/2000	Nicholson et al.	623/17
6,102,948	A		8/2000	Brosnahan, III	623/17
6,120,506	A	*	9/2000	Kohrs et al.	606/80
6,132,472	A		10/2000	Bonutti	623/23
6,159,211	A		12/2000	Boriani et al.	606/61
6,159,215	A	*	12/2000	Urbahns et al.	606/86
6,193,756	B1		2/2001	Studer et al.	623/17.15
6,200,347	B1		3/2001	Anderso	623/16.11
6,224,607	B1	*	5/2001	Michelson	606/96
6,224,631	B1		5/2001	Kohrs	623/17.11
6,241,769	B1		6/2001	Nicholson et al.	623/17.11
6,241,771	B1	*	6/2001	Gresser et al.	623/17.16
6,251,140	B1		6/2001	Marino et al.	623/17.16
6,258,125	B1		7/2001	Paul et al.	623/17.11
6,277,149	B1	*	8/2001	Boyle et al.	623/17.16
6,319,257	B1	*	11/2001	Carignan et al.	606/99
6,371,989	B1		4/2002	Chauvin et al.	623/17.11
6,383,221	B1	*	5/2002	Scarborough et al.	623/17.11
6,440,142	B1	*	8/2002	Ralph et al.	606/99
6,442,814	B1		9/2002	Landry et al.	26/29
6,454,806	B1		9/2002	Cohen et al.	623/17.15
6,527,773	B1	*	3/2003	Lin et al.	606/61
6,547,823	B2	*	4/2003	Scarborough et al.	623/17.16
6,595,998	B2		7/2003	Johnson et al.	606/90
6,626,905	B1	*	9/2003	Schmiel et al.	606/61
6,635,086	B2	*	10/2003	Lin	623/17.11
6,648,895	B2	*	11/2003	Burkus et al.	606/90
6,755,841	B2	*	6/2004	Fraser et al.	606/99
2002/0058950	A1	*	5/2002	Winterbottom et al.	606/99
2003/0105528	A1		6/2003	Shimp et al.	

FOREIGN PATENT DOCUMENTS

EP	369603	5/1990
EP	517030	5/1992
EP	667127	8/1995
EP	706876	4/1996
EP	716840	6/1996
EP	737448	10/1996
EP	796593	9/1997
EP	880938	2/1998
EP	809974	4/1998
EP	809975	4/1998
EP	811356	4/1998
WO	WO-94/04100	3/1994
WO	WO-94/10928	5/1994
WO	WO-95/01810	1/1995
WO	WO-96/08205	3/1996
WO	WO-96/17564	3/1996
WO	WO-96/41582	12/1996
WO	WO-97/20513	6/1997
WO	WO-97/33525	9/1997
WO	WO-97/37620	10/1997
WO	WO-98/09586	3/1998
WO	WO-98/14142	4/1998
WO	WO-98/17208	4/1998
WO	WO-98/25539	6/1998
WO	WO-99/08627	2/1999
WO	WO-99/38461	8/1999
WO	WO-00/45712	8/2000
WO	WO-00/45713	8/2000
WO	WO-91/06261	5/2001
WO	WO-01/41681	6/2001
WO	WO-01/49333	7/2001

OTHER PUBLICATIONS

Benini, et al., "Undercutting decompression and posterior fusion with translaminar facet screw fixation in degenerative lumbar spinal stenosis: Technique and resuits", *Neuro-Orthopedics*, (1995), 159-172.

Kambin, et al., "History and current status of percutaneous arthroscopic disc surgery", *Spine, 21,* (1996),57S-61S.

Stein, et al., "Percutaneous facet joint fusion: Preliminary experience", *Journal of Vascular and Interventional Radiology, 4,* (1993), 69-74.

Vamvanij, et al., "Surgical treatment of internal disc disruption: An outcome study of four fusion techniques", *Journal of Spinal Disorders, 4,* (1998),375-382.

* cited by examiner

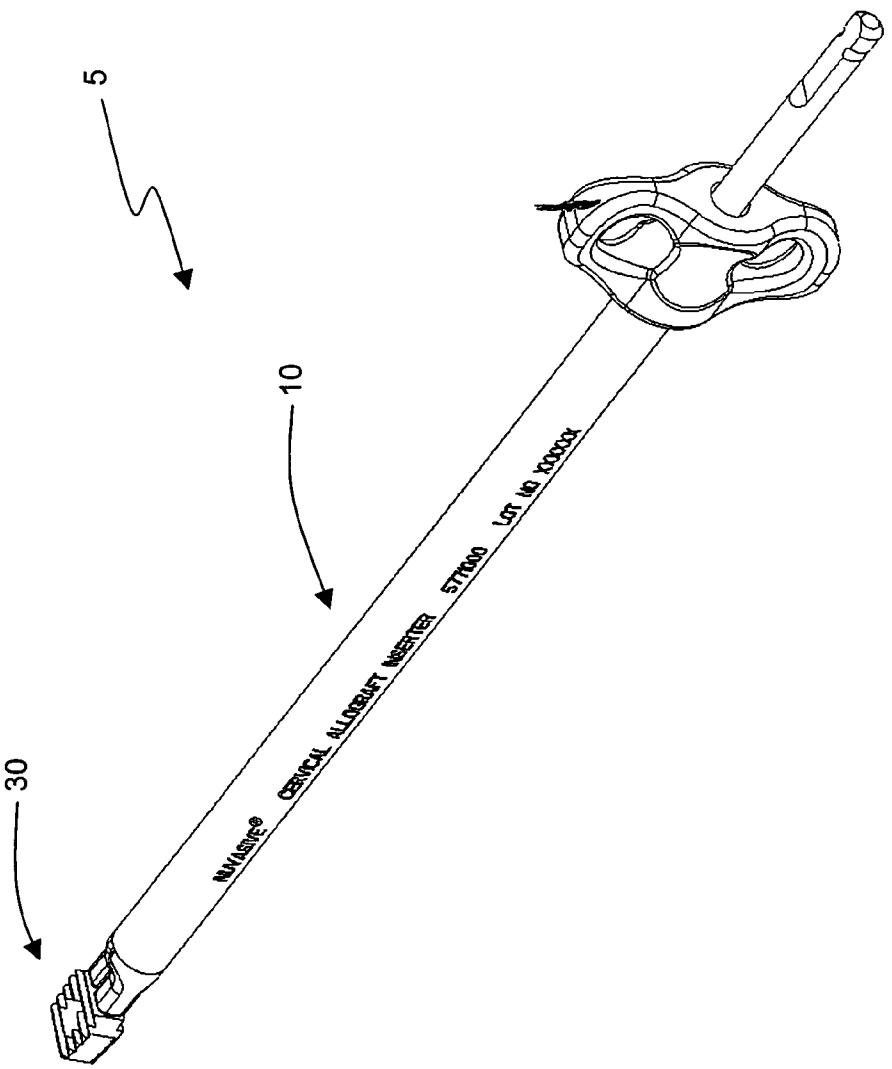

FIG. 1

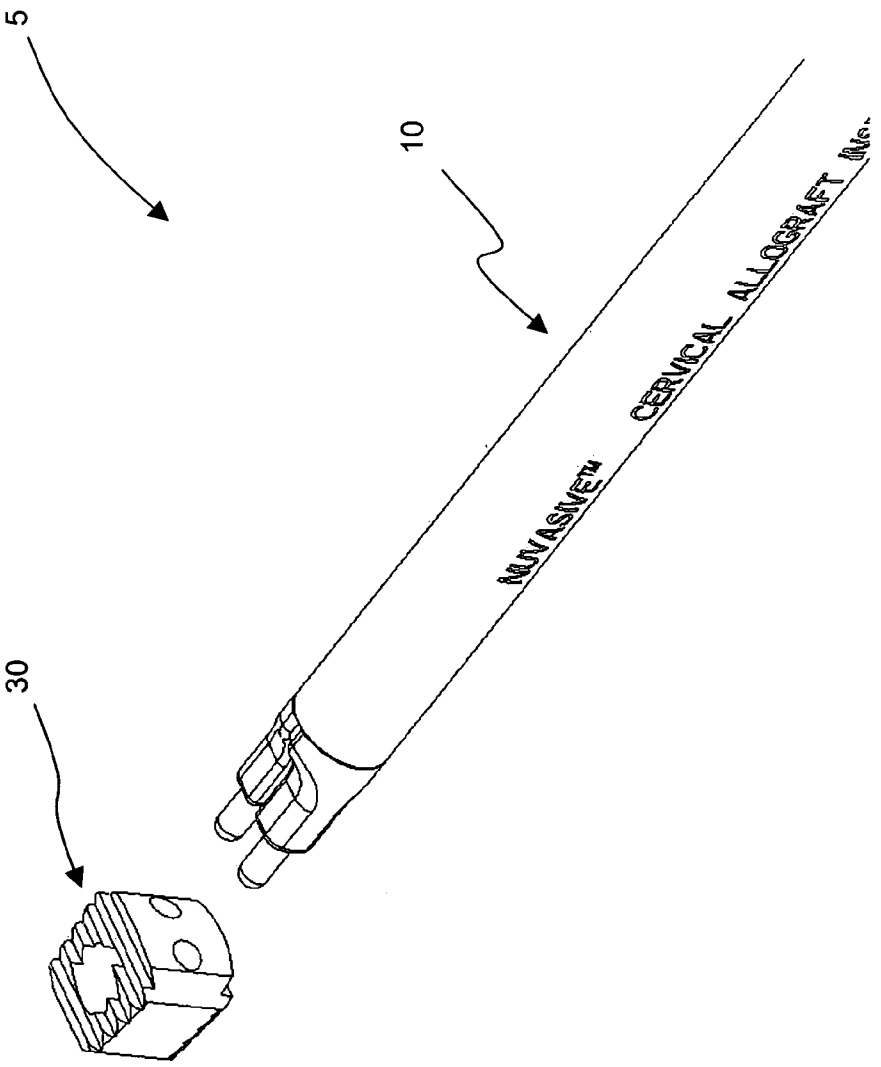

FIG. 2

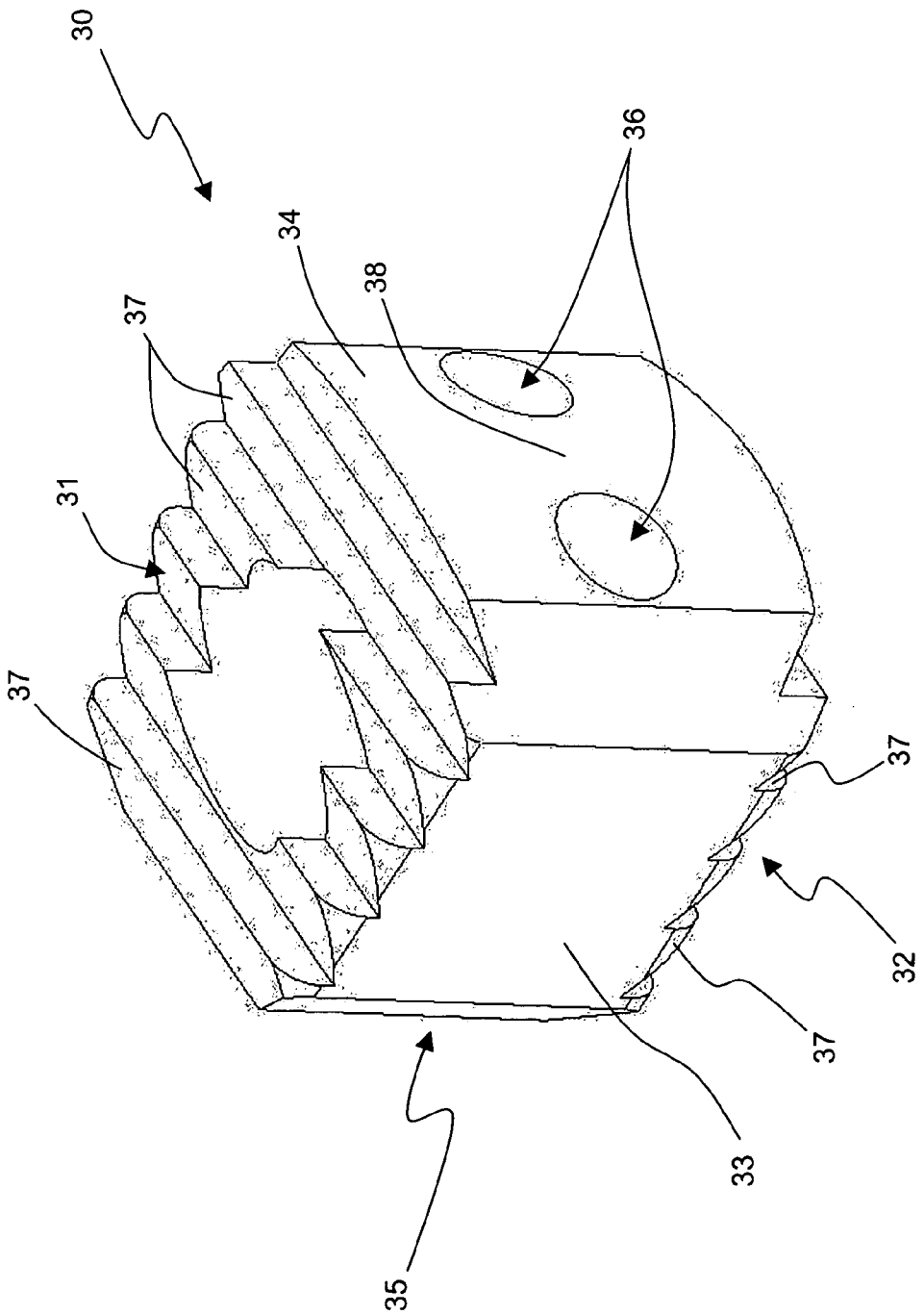

FIG. 3

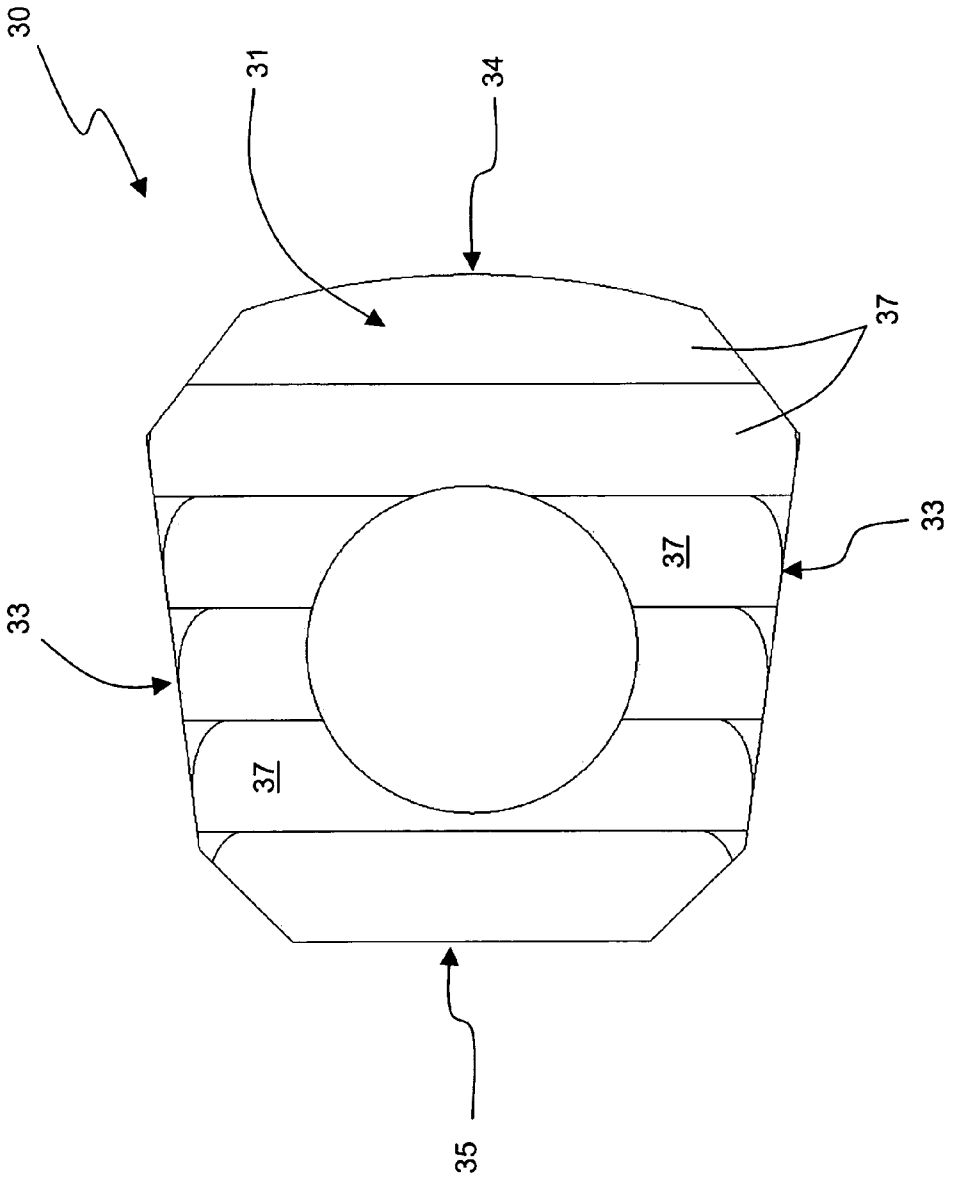

FIG. 4

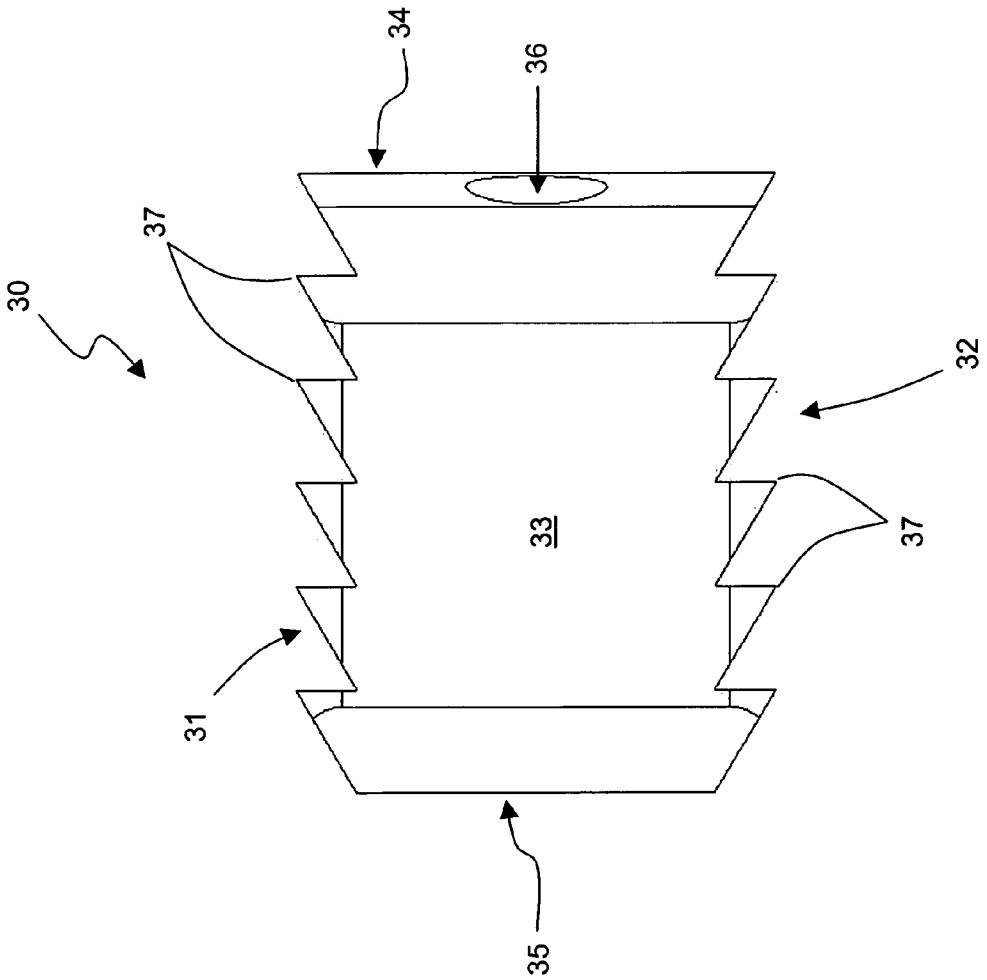

FIG. 5

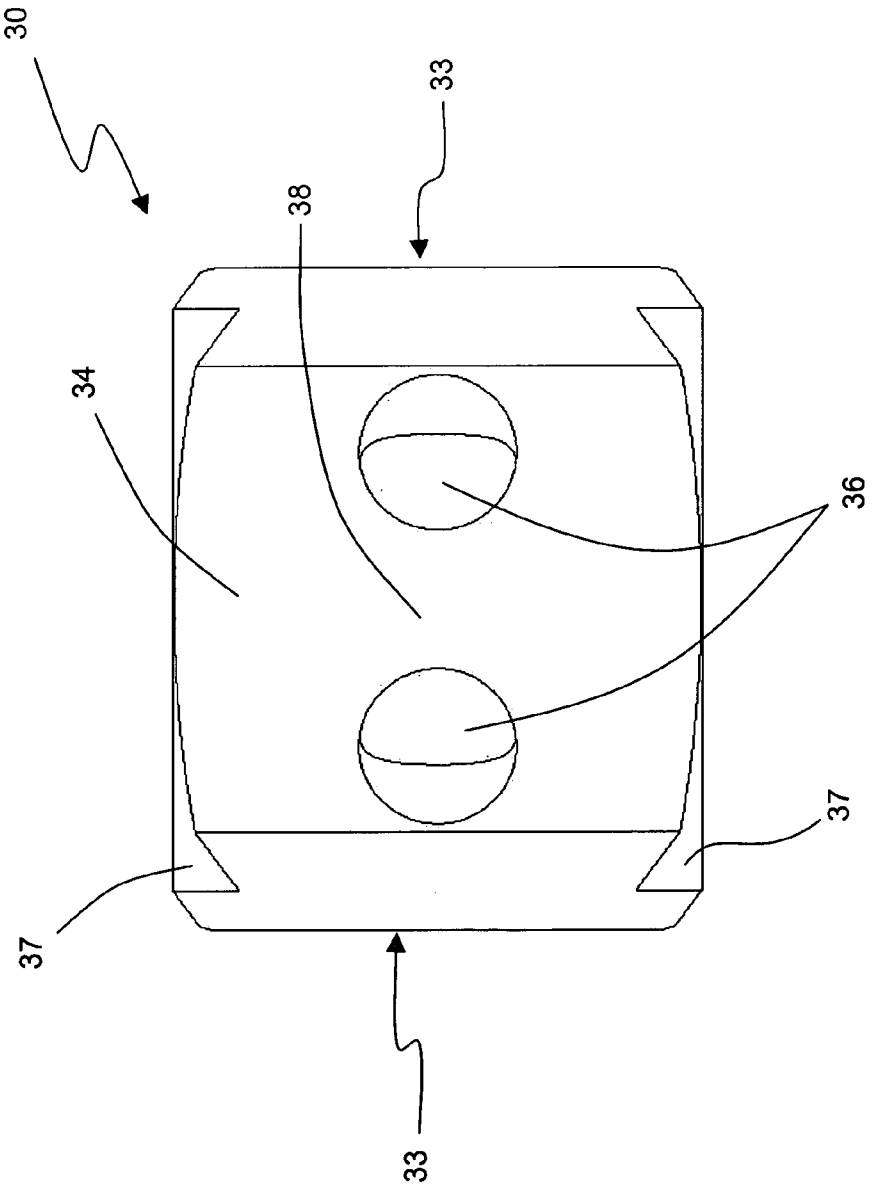

FIG. 6

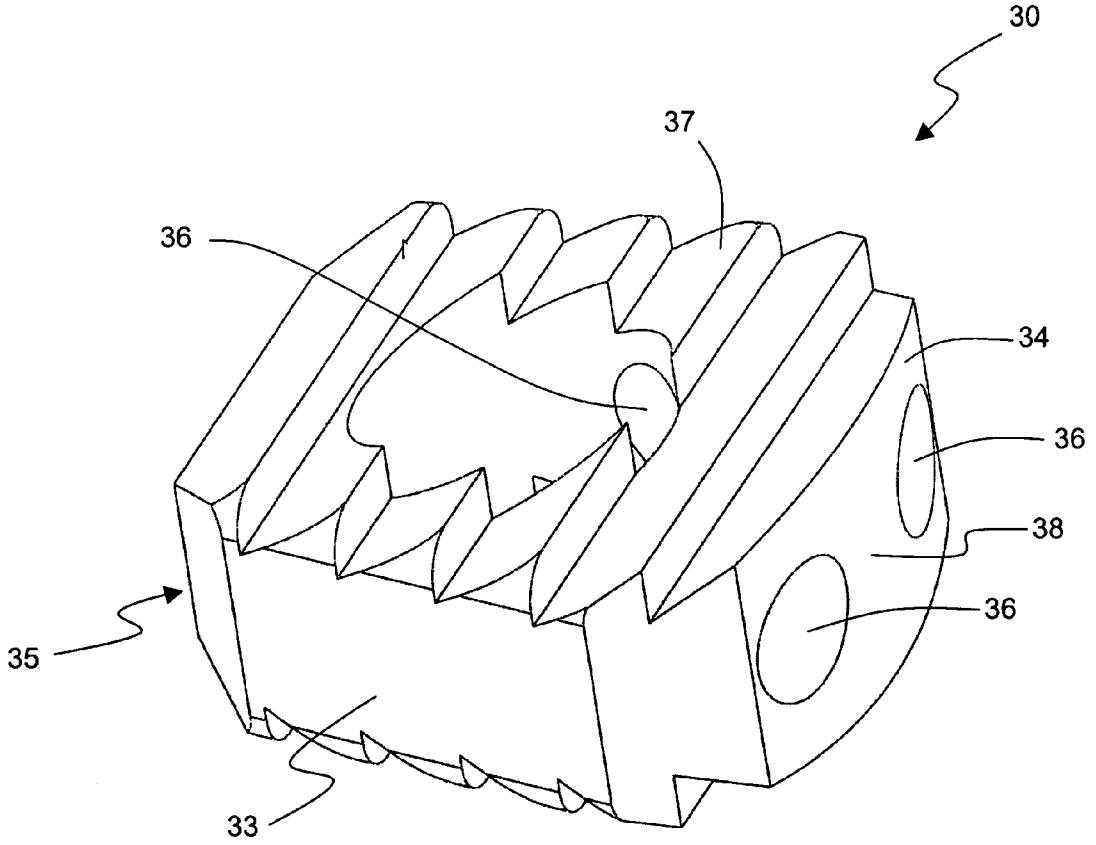

5 X 11 X 11mm DEPICTED

FIG. 7

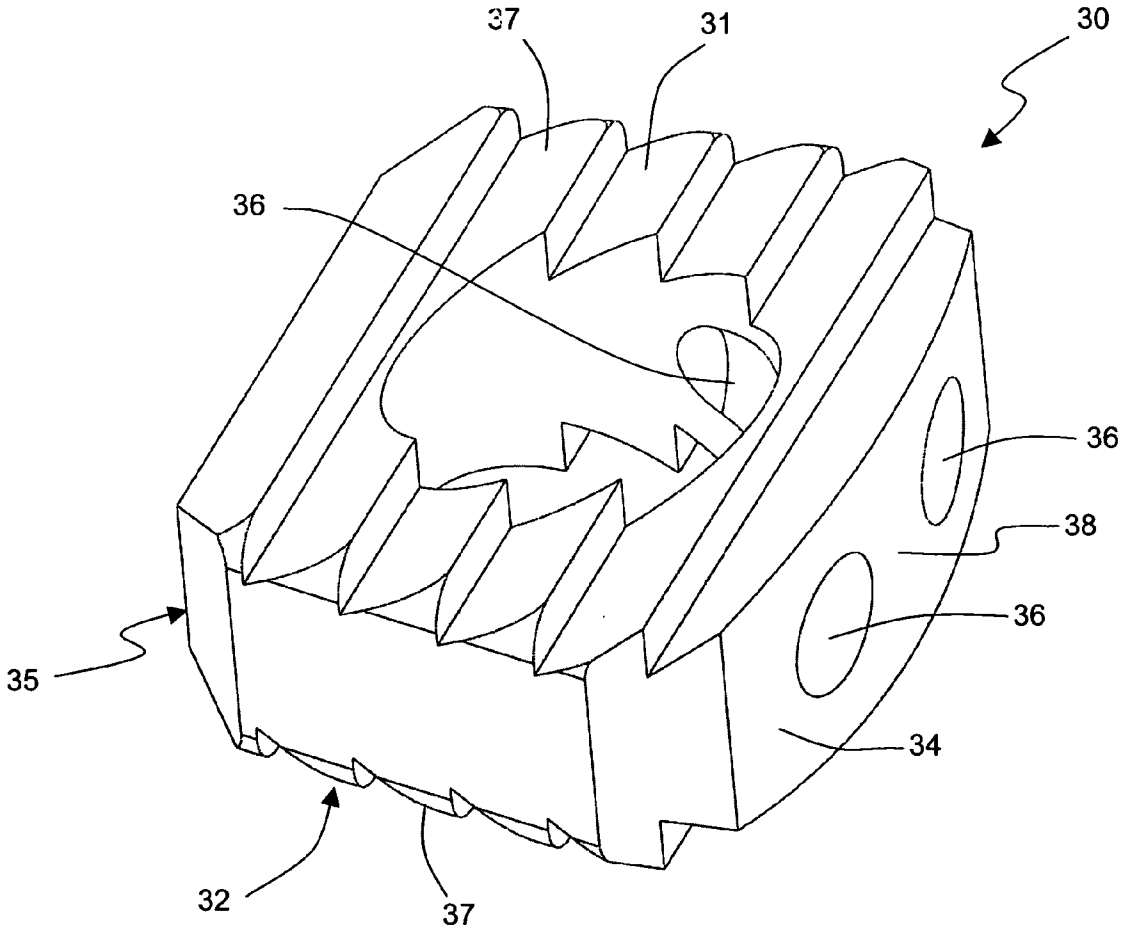

5 X 14 X 11mm DEPICTED

FIG. 8

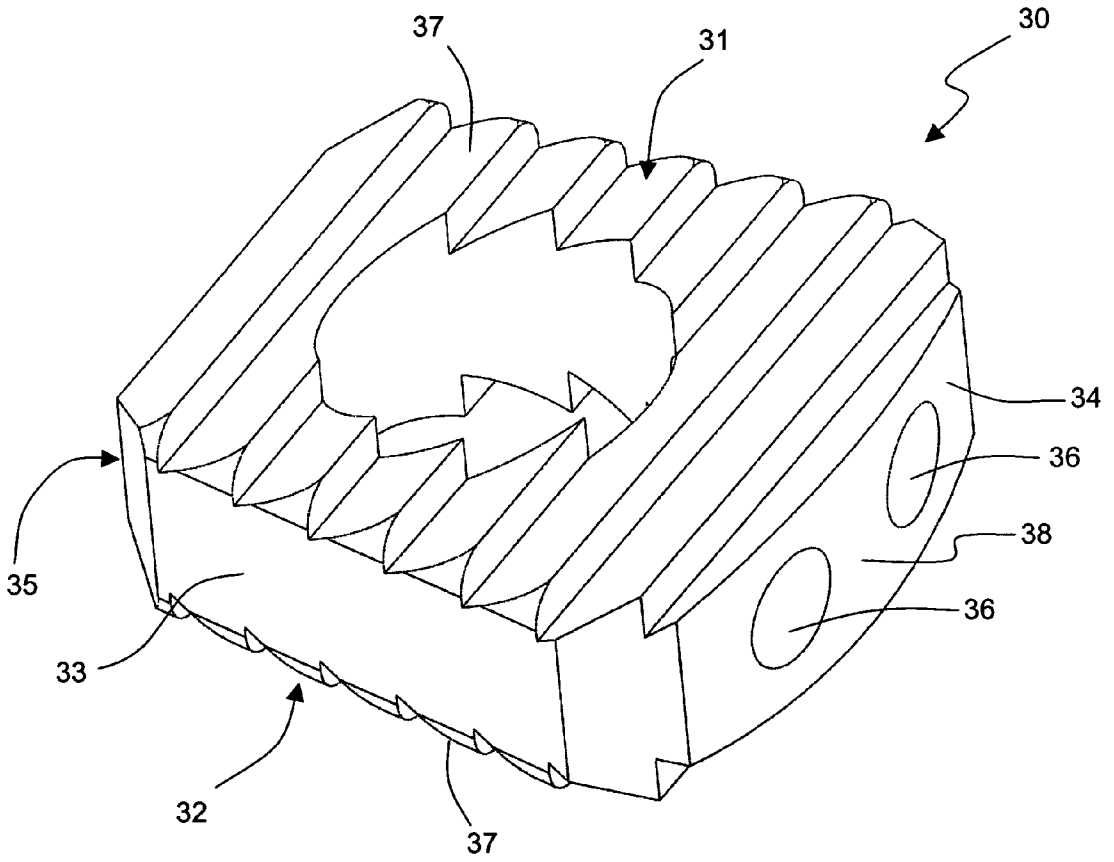

5 X 14 X 14mm DEPICTED

FIG. 9

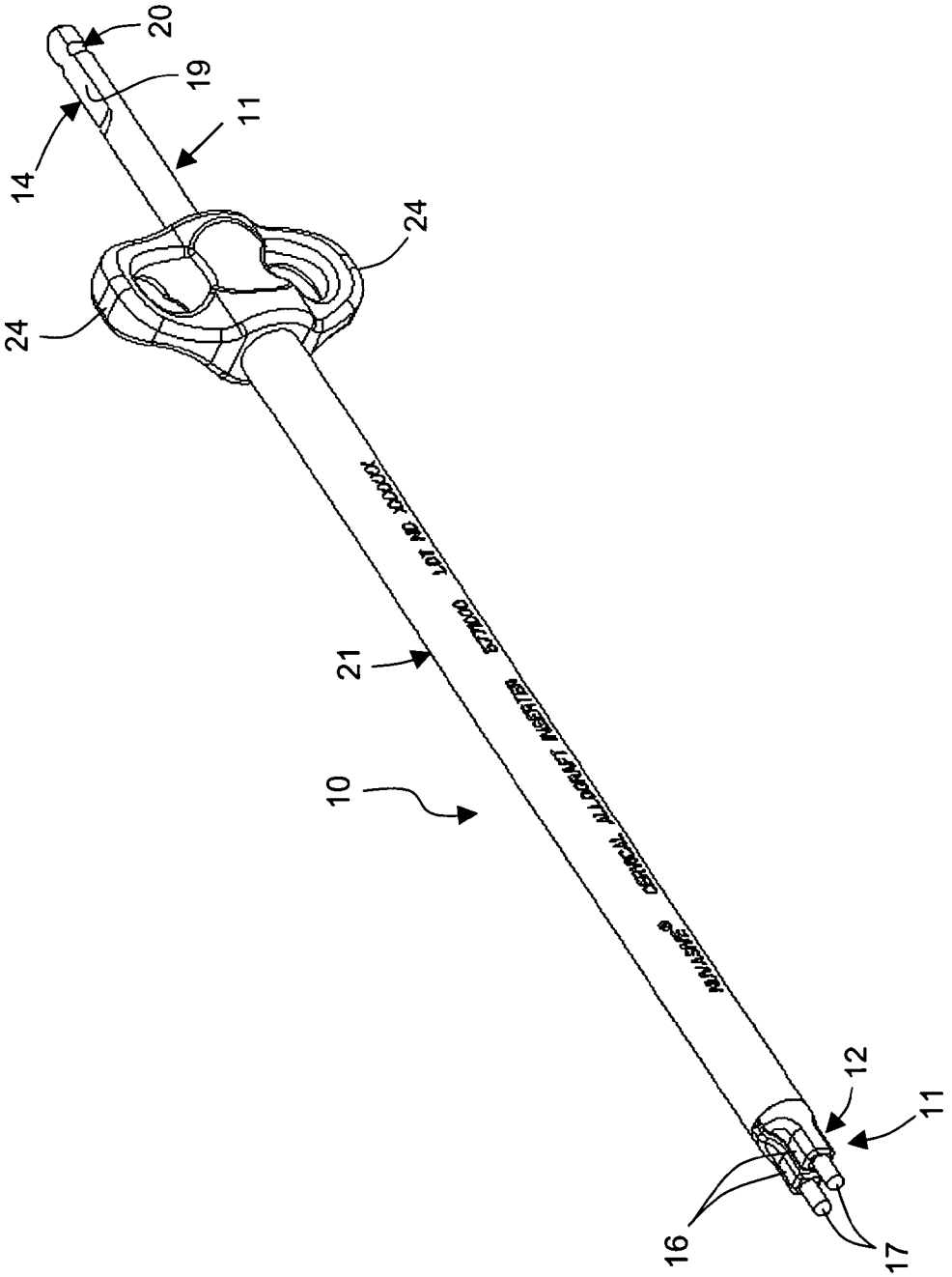

FIG. 10

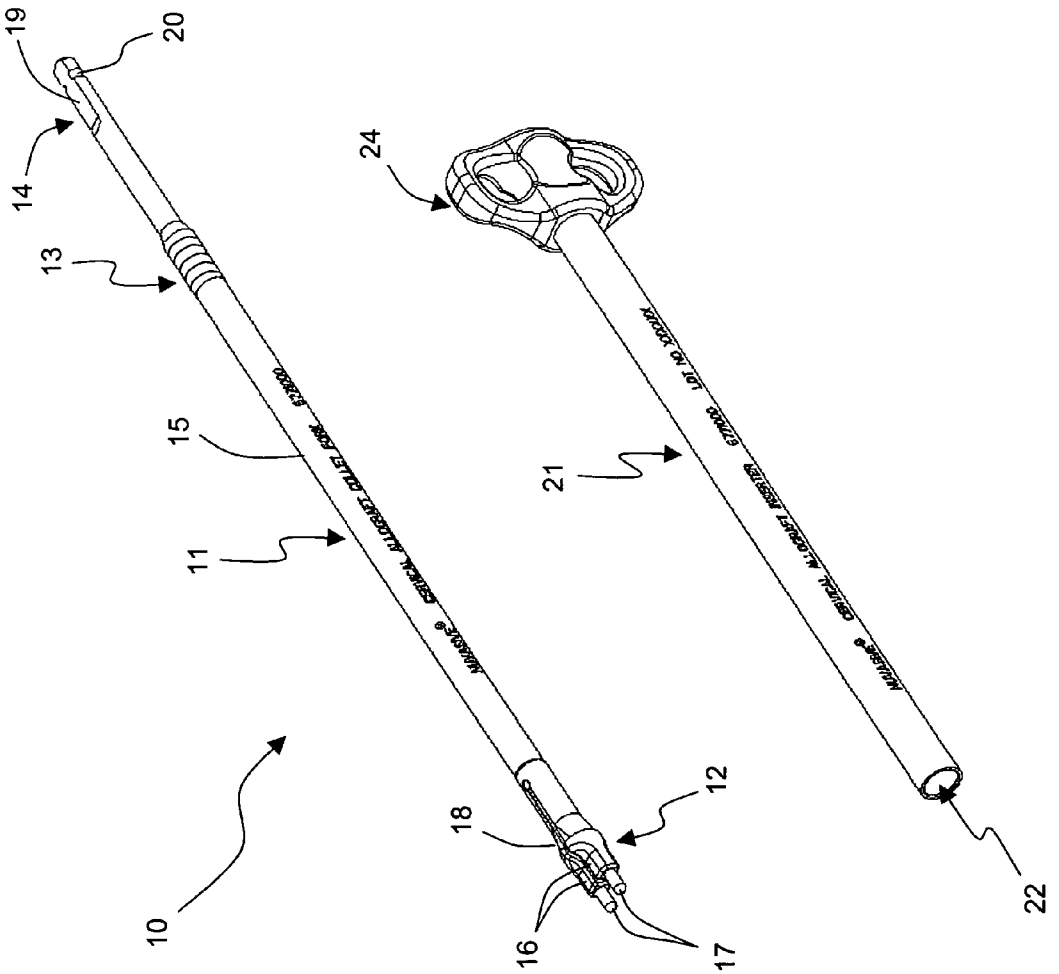

FIG. 11

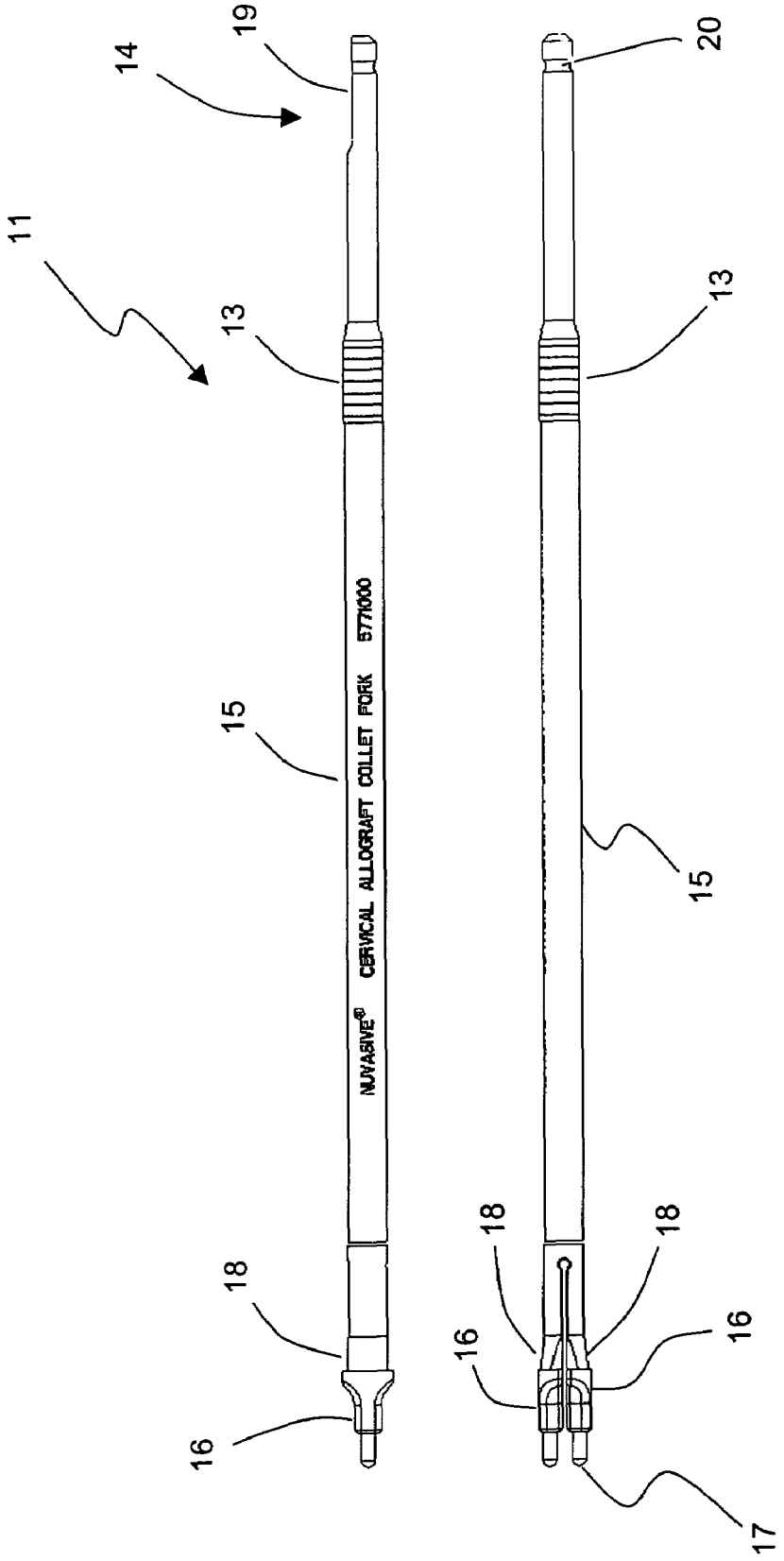
11
14
19
13
15
NUVASIVE® CERVICAL ALLOGRAFT COLLET FORK 5771000
18
16
20
13
15
18
18
16
16
17

FIG. 12

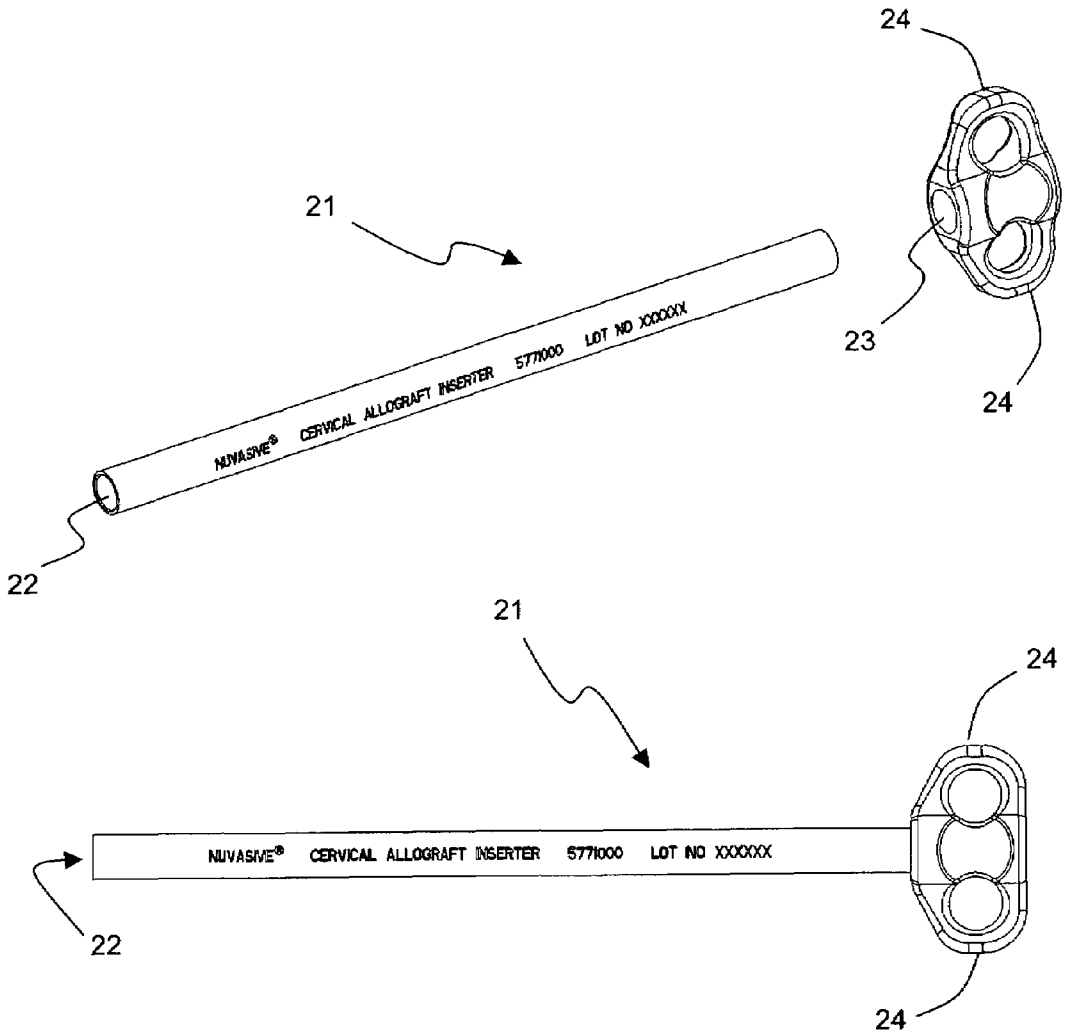
24
21
23
24
NUVASIVE® CERVICAL ALLOGRAFT INSERTER 5771000 LOT NO XXXXXX
22
21
24
NUVASIVE® CERVICAL ALLOGRAFT INSERTER 5771000 LOT NO XXXXXX
22
24

FIG. 13

SYSTEM AND METHODS FOR CERVICAL SPINAL FUSION

CROSS-REFERENCE TO RELATED APPLICATION

This application claims the benefit of the filing date under 35 USC 119(e) of provisional application entitled "Spinal Surgery Systems and Methods", Ser. No. 60/336,501 filed Oct. 30, 2001, and fully incorporated herein by reference.

BACKGROUND OF THE INVENTION

I. Field of the Invention

The present invention relates to spinal surgery and, more particularly, to systems and methods for performing spinal fusion between adjacent cervical vertebrae.

II. Discussion of the Prior Art

Intervertebral spinal inserts are used to provide support and maintain normal distance between adjacent vertebrae in cases where a patient's vertebral discs have degenerated. Such degeneration can occur as a result of aging or trauma and typically results in pinched or damaged nerves between or proximal to the adjacent vertebrae. Moreover, such disc degeneration causes shifting of the loading along the patient's spinal column, which in turn further accelerates the vertebral degeneration.

Intervertebral inserts are typically used to reestablish normal intervertebral spacing and to cause fusion between adjacent vertebral bodies. A common problem with the existing intervertebral spinal inserts is that they do not provide stabilization in two perpendicular directions in the plane of the patient's intervertebral space. Another disadvantage is that, during such major surgery, the actual insertion of the intervertebral insert requires distraction of the adjacent vertebrae to first open a sufficiently large passage for the insertion of the insert therebetween. Such distraction is typically performed by dedicated instrumentation and invasive tools, which must first enter the intervertebral space and then grip and hold apart the adjacent vertebrae. Moreover, the shape of current inserts does not take advantage of the natural contoured shape of the adjacent vertebral surfaces.

It is desirable to be able to insert one or more prosthetic implants between vertebrae to stabilize the vertebrae and promote fusion of the vertebrae. Further, it is desirable to insert these implants via a minimally invasive procedure to reduce the potential trauma to a patient. In minimally invasive implant insertion procedures, it is desirable to be able to monitor the location of the implant relative to the vertebrae using a fluoroscope. When implanting bony implants, however, it may be difficult to visualize the implant in this fashion. A need exists, therefore, for an inserter, implant, and minimally invasive procedure that enables a surgeon to monitor the implant location relative to the vertebrae during the insertion process.

The present invention is directed at addressing this need and eliminating, or at least reducing, the effects of the shortcomings of the prior art as described above.

SUMMARY OF THE INVENTION

The present invention overcomes the drawbacks of the prior art by providing, according to a first broad aspect of the present invention, a system for performing spinal fusion, including a spinal implant and an implant insertion tool. The spinal implant has top and bottom sides, lateral sides, a

proximal side and a distal side, where the top and bottom sides each have a generally polygonal cross-section. The proximal side is intersected generally perpendicular by at least two apertures defining a purchase region therebetween. The implant insertion tool includes an elongate fork member and a generally tubular lock member. The elongate fork member has a pair of clamping arms extending generally parallel and away from the distal end of an elongate section. Each clamping arm has an engagement feature dimensioned to slidably engage the apertures of the spinal implant. A thread feature is provided at the proximal end of the elongate section, as well as a handling feature further proximal from the thread feature. The generally tubular lock member has a distal end, a bore dimensioned to receive a proximal portion of the elongate fork member therethrough from the distal end but smaller than the outer dimension of said clamping arms of the elongate fork member, and a thread feature at the proximal end dimensioned to engage the thread feature of the elongate fork member. Clockwise rotation of the tubular lock member with respect to the elongate fork member causes the distal end of the tubular lock member to force the clamping arms of the elongate fork member to displace laterally toward the longitudinal axis of the elongate fork member. This causes the engagement features to displace toward each other, securing the spinal implant by creating a compressive force on the purchase region when the engagement features are slidably engaged in the at least two apertures.

The present invention overcomes the drawbacks of the prior art by providing, according to a second broad aspect of the present invention, a spinal implant for use with an inserter having an elongate fork member and a tubular lock member and at least two engagement features. The spinal implant includes a generally annular portion of bone fusion matrix having top and bottom sides, lateral sides, a proximal side and a distal side, with the top and bottom sides having a generally polygonal cross-section. At least two apertures are provided generally perpendicular to and intersecting with the proximal side, creating a purchase region therebetween.

The present invention overcomes the drawbacks of the prior art by providing, according to a third broad aspect of the present invention, an implant insertion device for inserting a spinal implant having at least two apertures defining a purchase region therebetween. The implant insertion device includes an elongate fork member and a generally tubular lock member. The elongate fork member has a pair of clamping arms extending generally parallel and away from the distal end of an elongate section. Each clamping arm has an engagement feature dimensioned to slidably engage the apertures of the spinal implant. A thread feature is provided at the proximal end of the elongate section. A generally cylindrical handling feature is provided further proximal from the thread feature. The generally tubular lock member has a distal end, a bore dimensioned to receive a proximal portion of the elongate fork member therethrough from the distal end but smaller than the outer dimension of the clamping arms of the elongate fork member. A thread feature is provided at the proximal end dimensioned to engage the thread feature of the elongate fork member. Clockwise rotation of the tubular lock member with respect to the elongate fork member will cause the distal end of said tubular lock member to force the clamping arms of the elongate fork member to displace laterally toward the longitudinal axis of the elongate fork member. This lateral displacement causes the engagement features to displace

toward each other and thus secure the spinal implant by creating a compressive force on the purchase region.

The present invention overcomes the drawbacks of the prior art by providing, according to a fourth broad aspect of the present invention, a method for performing spinal fusion, comprising the steps of: (a) providing a spinal implant having top and bottom sides, lateral sides, a proximal side and a distal side, said top and bottom sides having a generally polygonal shape, the proximal side being intersected generally perpendicular by at least two apertures creating a purchase region therebetween; (b) providing a spinal implant insertion device having an elongate fork member and a tubular lock member, the elongate fork member having a pair of clamping arms extending generally parallel and away from the distal end of an elongate section, each clamping arm having an engagement feature dimensioned to slidably engage the apertures of the spinal implant, a thread feature at the proximal end of the elongate section and a handling feature further proximal from the thread feature, and the generally tubular lock member having a distal end, a bore dimensioned to receive a proximal portion of the elongate fork member therethrough from the distal end but smaller than the outer dimension of the clamping arms of the elongate fork member, and a thread feature at the proximal end that is dimensioned to engage the thread feature of the elongate fork member; (c) engaging the at least two apertures of the spinal implant with the engagement features of the elongate fork member; (d) rotating the tubular lock member clockwise with respect to the elongate fork member causing the distal end of said tubular lock member to force the clamping arms of the elongate fork member to displace laterally toward the longitudinal axis of the elongate fork member, the lateral displacement causing the engagement features to displace toward each other and thus securing the spinal implant by creating a compressive force on the purchase region; (d) introducing the inserter and the secured spinal implant into a prepared intervertebral space; (e) rotating the tubular lock member counterclockwise with respect to the elongate fork member causing a reduction of the compressive force on the purchase region and allowing the engagement features of the elongate fork member to be slidably disengaged from the spinal implant; and (f) removing the spinal implant insertion device from the prepared intervertebral space.

BRIEF DESCRIPTION OF THE DRAWINGS

Other objects and advantages of the invention will become apparent upon reading the following detailed description and upon reference to the drawings in which:

FIG. **1** is a perspective view of a system for performing cervical spinal fusion according to a first broad aspect of the present invention;

FIG. **2** is an enlarged perspective view of the distal region of the system shown in FIG. **1**, detailing the attachment features between an exemplary implant and exemplary inserter assembly according to the present invention;

FIG. **3** is an enlarged perspective view of the exemplary implant shown in FIGS. **1–2**;

FIGS. **4–6** are top, side, and front views, respectively, of the exemplary implant shown in FIGS. **1–2** according to the present invention;

FIG. **7** is a perspective view of an exemplary implant having, by way of example only, a height of 5 mm, a width of 11 mm, and a length of 11 mm according to the present invention;

FIG. **8** is a perspective view of an exemplary implant having, by way of example only, a height of 5 mm, a width of 14 mm, and a length of 11 mm according to the present invention;

FIG. **9** is a perspective view of an exemplary implant having, by way of example only, a height of 5 mm, a width of 14 mm, and a length of 14 mm according to the present invention;

FIG. **10** is a perspective view of an exemplary inserter fully assembled, including an elongate fork member and a tubular lock member;

FIG. **11** is a perspective view of an exemplary inserter unassembled, including an elongate fork member and a tubular lock member;

FIG. **12** includes a side view and a top view, respectively, of the elongate fork member of the inserter according to the present invention; and

FIG. **13** includes a perspective view and a side view, respectively, of the tubular lock member of the inserter according to the present invention.

DESCRIPTION OF THE PREFERRED EMBODIMENT

Illustrative embodiments of the invention are described below. In the interest of clarity, not all features of an actual implementation are described in this specification. It will of course be appreciated that in the development of any such actual embodiment, numerous implementation-specific decisions must be made to achieve the developers' specific goals, such as compliance with apparatus-related and business-related constraints, which will vary from one implementation to another. Moreover, it will be appreciated that such a development effort might be complex and time-consuming, but would nevertheless be a routine undertaking for those of ordinary skill in the art having the benefit of this disclosure. The apparatus disclosed herein boast a variety of inventive features and components that warrant patent protection, both individually and in combination.

FIGS. **1–2** illustrate a system **5** for performing spinal fusion between adjacent cervical vertebrae, including an exemplary implant **30** and an exemplary inserter assembly **10** provided in accordance with the present invention. As will be described in detail below, the inserter assembly **10** is configured to releasably maintain the exemplary implant **30** in the proper orientation for insertion. The implant **30** may be simultaneously introduced into a disc space while locked within the inserter **10** and thereafter released. The exemplary implant **30**, having been deposited in the disc space, effects spinal fusion over time as the natural bone healing process integrates and binds the implant with the adjacent vertebral bodies. This fusion may be facilitated or augmented by introducing or positioning various materials in a space created within or adjacent to the implant **30**. Those materials may be introduced before, during, or after the insertion of the exemplary implant **30**. The additional material may include bone autograft harvested from the patient receiving the implant **30**, one or more additional bone allograft or xenograft implants, any number of non-bone implants, and any number of fusion promoting compounds such as bone morphogenic protein. While described below primarily with reference to the cervical spine, it is to be readily appreciated that the system for performing spinal fusion of the present invention may be suitable for accomplishing fusion in any spinal region (lumbar, thoracic, and cervical).

FIGS. **3–9** depict various embodiments of the exemplary implant **30**. Some common attributes are shared among the

various embodiments. More specifically, each implant **30** has a top surface **31**, a bottom surface **32**, lateral sides **33**, a proximal side **34**, and a distal side **35**. In one embodiment, the top and bottom surfaces **31**, **32** are generally parallel. The implants **30** preferably include two apertures **36** which are generally parallel to one another. The apertures **36** extend inwardly from the proximal side **34** in a generally perpendicular fashion relative to the proximal side **34**. Although shown as having a generally circular cross-section, it will be appreciated that the apertures **36** may be provided having any number of suitable shapes or cross-sections, including but not limited to rectangular or triangular. The implant **30** includes a purchase region **38** extending between the apertures **36** for releasable engagement with the inserter assembly **10**. The exemplary implant **30** also preferably includes anti-migration features along the top surface **31** and bottom surface **32** to increase the friction between the implant and the adjacent contacting surfaces of the vertebral bodies. That friction prohibits migration of the implant **30** during the propagation of natural bony fusion. In the exemplary implant **30**, the anti-migration feature comprises a series of angular teeth **37** are disposed on the top **31** and bottom **32** sides.

FIGS. **7–9** illustrate various embodiments of the exemplary implant **30**. FIG. **7** depicts a 5 mm tall, 11 mm wide, and 11 mm long implant **30**. FIG. **8** depicts a 5 mm tall, 14 mm wide, and 11 mm long implant **30**. FIG. **9** depicts a 5 mm tall, 14 mm wide, and 14 mm long implant **30**. Although each of the presented embodiments has a height dimension of 5 mm, it should be readily understood that the height of the implant **30** may range from approximately 2–12 mm. Alternatively, the top **31** and bottom **32** surfaces may be angled with respect to one another to match the natural curvature of the spine (i.e., lordosis or kyphosis). By way of example, implants designed for the cervical or lumbar regions of the spine will have anterior height greater than the posterior height to match the natural lordosis in those regions. Inversely, implants designed for implantation into the thoracic region will be manufactured with an anterior height dimension smaller than the posterior height to match the natural kyphosis in that region.

FIGS. **10–13** detail the exemplary implant inserter **10** according to one embodiment of the present invention. The exemplary inserter **10** includes an elongate fork member **11** and a tubular lock member **21**. The elongate fork member **11** is constructed with a two-pronged feature **12** at its distal end, a thread feature **13** proximal of the two-pronged feature **12** and a handling feature **14** further proximal. The central portion **15** of the elongate fork member **11** (i.e., between the distal two-pronged feature **12** and the proximal thread feature **13**) is generally cylindrical of a length sufficient to allow the device to span from the surgical target site to a location sufficiently outside the patient's body so the handling feature **14** can be easily accessed by a clinician or a complimentary controlling device.

The two-pronged feature **12** disposed at the distal end of the elongate fork member **11** utilizes two clamping arms **16**. The clamping arms **16** are generally parallel and spaced apart from one another when in a freestanding configuration. An engagement feature **17** is disposed on each of the clamping arms **16** at its distal end generally parallel to the clamping arms **16**. Each engagement feature **17** is coupled with the clamping arms **16** so that the engagement feature **17** is restrained from movement relative to the clamping arm **16**. The engagement features **17** are generally cylindrical with a diameter smaller than the apertures **36** previously described on the exemplary implant **30** enabling each of the engagement features **17** to slidably engage one of the apertures **36**.

Further proximal from the engagement features **17**, the outer surface of each of the clamping arms **16** is tapered when the arms are in a freestanding parallel relationship to one another. The taper feature **18** is oriented with the larger dimension closest to the engagement features **17** and the smaller dimension closest to the proximal handling feature **14** of the device. Proximal to the taper feature **18**, the elongate fork member **11** becomes generally cylindrical and has a constant diameter approximately matching the smallest outer dimension of the taper feature **18**. In the presented embodiment, the clamping arms **16** join to form one body. The length of the generally cylindrical portion **15** ranges from approximately 2–23 cm. A threaded feature **13** is disposed concentric and proximal to the generally cylindrical portion **15**.

The handling feature **14** in the exemplary embodiment is the most proximal feature and is generally cylindrical. The handling feature allows a clinician to manipulate the tool during an implant insertion procedure which may include multiple facets or knurling. Alternatively, the handling feature **14** may be constructed to engage a complimentary control device. In the presented embodiment, the handling feature **14** is generally cylindrical with one flat surface **19**. In addition, a concentric channel **20** is disposed toward the proximal end of the handling feature **14** and intersects the flat surface **19**. When mated to a complimentary handling device, the flat surface **19** restricts rotation between the complimentary handling fixture and the handling feature **14**. Similarly, the concentric channel **20** provides a surface that may be engaged by a retractable feature on the complimentary handling fixture to restrict axial motion between the complimentary handling fixture and the elongate fork member **11**.

FIG. **13** details the tubular lock member **21** of the exemplary inserter **10**. The tubular lock member **21** includes a central bore **22** dimensioned to receive the proximal end of the elongate fork member **11** therein. The internal dimension of the central bore **22** is smaller than the largest freestanding outer dimension of the taper feature **18**. As a result, the portion of the elongate fork member **11** that may be received by the central bore **22** of the tubular lock member **21** is limited by interference between the distal end of the tubular lock member **21** and the taper feature **18** of the elongate fork member **11**. In the presented embodiment, the outer dimension of the threaded feature **13** of the elongate fork member **11** is smaller than the largest outer dimension of the taper feature **18** on the elongate fork member **11**. A thread feature **23** is located at the proximal end of the tubular lock member **21** that in the central bore **22**. The thread feature **23** matches the thread feature **13** on the elongate fork member **11** so that they can be threadably attached to one another. To ease the rotation of the tubular lock member **21** by hand, two semi-circular wings **24** may be provided protruding laterally outward from either side of the tubular lock member **21**. Alternatively, other methods of creating a gripping surface are contemplated including but not limited to knurling or facets.

In order to use the system to perform a spinal fusion procedure, the clinician must first designate the appropriate implant size. After the implant **30** is chosen, the engagement features **17** of the elongate fork member **11** are inserted into the apertures **36** on the implant **30**. At that time the implant **30** and elongate fork member **11** are slidably engaged with one another. Before the clinician can manipulate the com-

bined implant **30** and elongated fork member **11**, they must be releasably secured together. In order to secure the implant **30** onto the elongate fork member **11**, the clinician would next employ the tubular lock member **21**. The clinician would insert the proximal end of the elongate fork member **11** into the central bore **22** of the tubular lock member **21** at its distal end. The tubular lock member **21** would then be advanced over the elongate fork member **11** until the thread feature **13** of that member and the thread feature **23** of the tubular lock member **21** become engaged.

Once engaged, advancement of the tubular lock member requires rotation of the tubular lock member **21** with respect to the elongate fork member **11**. Preferably, after only a small amount of engagement of the thread features the distal end of the tubular lock member **21** would contact the taper feature **18** of the elongate fork member **11**. The tubular lock member **21** would be advanced creating greater interference as the distal end approaches the distal end of the taper feature **18** which has the larger outer dimension. The increasing interference would laterally displace the clamping arms **16** of the elongate fork member **11** towards each other. Since the engagement features **17** of the elongate fork member **11** were initially inserted into the apertures **36** of the exemplary implant **30**, the displacement of the clamping arms **16** would create a compressive force on the purchase region **38** separating the apertures **36** of the exemplary implant **30**. That compressive force allows a clinician to manipulate the system without the exemplary implant **30** becoming disengaged from the inserter **10**.

A clinician can utilize the secured system in either an open or minimally invasive spinal fusion procedure. In either type of procedure, a working channel would be created in a patient that reaches the targeted spinal level. After the creation of that channel, the intervertebral space would be prepared. After preparation the secured device is used to place a spinal implant **30** into the prepared intervertebral space. Once the implant **30** is inserted into the prepared space, the implant **30** is released from the implant inserter **10** by retracting the tubular lock member **21** from the elongate fork member **11** by rotating the tubular lock member **21** with respect to the elongate fork member **11** in the opposite direction from that used to initially secure the implant **30**. That motion removes the compressive force on the purchase region **38** between the apertures **36** of the implant **30** and allows the engagement features **17** to be slidably removed from the apertures **36**. After the engagement features **17** are disengaged from the implant **30**, the inserter **10** is removed from the working channel and the channel is closed. As previously mentioned, additional materials may be included in the procedure either before, during or after the insertion of the implant **30** to aid the natural fusion of the targeted spinal level.

While the invention is susceptible to various modifications and alternative forms, specific embodiments thereof have been shown by way of example in the drawings and are herein described in detail. It should be understood, however, that the description herein of specific embodiments is not intended to limit the invention to the particular forms disclosed, but on the contrary, the invention is to cover all modifications, equivalents, and alternative falling within the spirit and scope of the invention as defined by the appended claims.

For example, although shown and described above with reference to implants formed from bone, it is to be readily appreciated that the insertion tool and manner of delivering multiple implants simultaneously may be employed with implants of any number of suitable constructions, including but not limited to metal, ceramic, plastic or composite. Moreover, with regard to bone, it will be readily appreciated that this term may be construed to include bone autograft (from the patient), allograft (from other human cadavers), or xenograft (bone from other species). It will also be appreciated that, although shown within the context of cervical spinal fusion, the system and related methods disclosed herein may find application in other areas of spinal fusion, such as thoracic and/or lumbar spinal fusion, such as may be accomplished by varying the sizes and dimensions of the implants and introducer system depending upon the particular spinal level (thoracic or lumbar). As an added convenience, the inserter **10** and/or any of a variety of sizer instruments used with the inserter **10** may be provided in a color-coded fashion comprising any number of different colors, with each color denoting a specific size implant **30** to employ. In this fashion, the surgeon may quickly and easily identify which size implant **30** (as well as a specific size inserter **10**) depending upon the color coding of the sizer (not shown) employed to pre-size the intradiscal space.

What is claimed is:

1. An implant insertion device for inserting a spinal implant having at least two apertures defining a purchase region therebetween, comprising:

an elongate fork member having a pair of clamping arms extending generally parallel and away from the distal end of an elongate section, each clamping arm having an engagement feature dimensioned to slidably engage said apertures of said spinal implant, a thread feature at the proximal end of the elongate section and a generally cylindrical handling feature further proximal from said thread feature; and

a generally tubular member having a distal end, a bore dimensioned to receive a proximal portion of said elongate fork member therethrough from the distal end but smaller than the outer dimension of said clamping arms of said elongate fork member and a thread feature at the proximal end that is dimensioned to engage said thread feature of said elongate fork member, whereby clockwise rotation of said tubular lock member with respect to said elongate fork member will cause said distal end of said tubular lock member to force said clamping arms of said elongate fork member to displace laterally toward the longitudinal axis of said elongate fork member, the lateral displacement causing said engagement features to displace toward each other securing said spinal implant by creating a compressive force on said purchase region.

2. The implant insertion device of claim **1**, wherein said engagement features are generally cylindrical pins mechanically coupled to and generally parallel to said longitudinal axis of said tubular lock member.

3. The implant insertion device of claim **1**, further comprising at least two wings protruding radially from the outer surface of said tubular lock member providing a surface to ease rotation of said tubular lock member.

4. The implant insertion device of claim **1**, wherein said generally cylindrical handling feature further comprises at least one generally flat facet on said generally cylindrical handling feature, and at least one channel circumscribing said generally cylindrical handling feature.

5. A method for performing spinal fusion comprising using a spinal implant having at least two apertures and a purchase region therebetween and an implant inserter engaging said spinal implant by slidably engaging said apertures and creating compressive force on said purchase region, comprising:

providing a spinal implant having top and bottom sides, lateral sides, a proximal side and a distal side, said top

and bottom sides having a generally polygonal shape, said proximal side being intersected generally perpendicular by at least two apertures creating a purchase region therebetween;

providing a spinal implant insertion device having an elongate fork member and a tubular lock member, said elongate fork member having a pair of clamping arms extending generally parallel and away from the distal end of an elongate section, each clamping arm having an engagement feature dimensioned to slidably engage said apertures of said spinal implant, a thread feature at the proximal end of the elongate section and a handling feature further proximal from said thread feature and said generally tubular lock member having a distal end, a bore dimensioned to receive a proximal portion of said elongate fork member therethrough from the distal end but smaller than the outer dimension of said clamping arms of said elongate fork member and a thread feature at the proximal end that is dimensioned to engage said thread feature of said elongate fork member;

engaging said at least two apertures of said spinal implant with said engagement features of said elongate fork member;

rotating said tubular lock member clockwise with respect to said elongate fork member causing said distal end of said tubular lock member to force said clamping arms of said elongate fork member to displace laterally toward the longitudinal axis of said elongate fork member, the lateral displacement causing said engagement features to displace toward each other securing said spinal implant by creating a compressive force on said purchase region;

introducing said inserter and said secured spinal implant into a prepared intervertebral space;

rotating said tubular lock member counterclockwise with respect to said elongate fork member causing a reduction of said compressive force on said purchase region and allowing said engagement features of said elongate fork member to be slidably disengaged from said spinal implant; and

removing said spinal implant insertion device from said prepared intervertebral space.

6. The implant insertion device of claim **1**, wherein at least part of the implant insertion device is color-coded to indicate to the surgeon which size implant insertion tool to use depending upon the size of the spinal implant.

7. The method of performing spinal fusion of claim **5**, wherein at least part of the implant insertion device is color-coded to indicate to the surgeon which size implant insertion tool to use depending upon the size of the spinal implant.

* * * * *