US008100955B2

(12) **United States Patent**
Blain et al.

(10) **Patent No.: US 8,100,955 B2**
(45) **Date of Patent: Jan. 24, 2012**

(54) **ORTHOPEDIC EXPANSION FASTENER**

(75) Inventors: **Jason Blain**, Encinitas, CA (US); **Greg Martin**, Encinitas, CA (US)

(73) Assignee: **Spinal Elements, Inc.**, Carlsbad, CA (US)

(*) Notice: Subject to any disclaimer, the term of this patent is extended or adjusted under 35 U.S.C. 154(b) by 877 days.

(21) Appl. No.: **11/374,658**

(22) Filed: **Mar. 13, 2006**

(65) **Prior Publication Data**

US 2006/0235411 A1 Oct. 19, 2006

Related U.S. Application Data

(60) Provisional application No. 60/662,747, filed on Mar. 17, 2005, provisional application No. 60/708,918, filed on Aug. 17, 2005.

(51) **Int. Cl.**
A61B 17/80 (2006.01)
A61B 17/04 (2006.01)
A61B 17/00 (2006.01)

(52) **U.S. Cl.** **606/291**; 606/289; 606/304; 606/71

(58) **Field of Classification Search** 623/17.11–17.16; 606/70–71, 280–305, 313, 315
See application file for complete search history.

(56) **References Cited**

U.S. PATENT DOCUMENTS

2,440,123	A	4/1948	Smith
2,500,993	A	3/1950	Christopher
2,677,369	A	5/1954	Knowles
3,426,364	A	2/1969	Lumb
3,848,601	A	11/1974	Ma et al.
3,867,728	A	2/1975	Stubstad et al.
3,893,196	A	7/1975	Hochman
3,987,499	A	10/1976	Scharbach et al.
4,013,071	A	3/1977	Rosenberg
4,309,777	A	1/1982	Patil
4,349,921	A	9/1982	Kuntz
4,388,921	A	6/1983	Sutter et al.

(Continued)

FOREIGN PATENT DOCUMENTS

CA	1329525	5/1994

(Continued)

OTHER PUBLICATIONS

Oct. 20, 2006; International Search Report and Written Opinion of the International Search Authority for PCT/US2006/009120.

(Continued)

Primary Examiner — Thomas Barrett
Assistant Examiner — Matthew Lawson
(74) *Attorney, Agent, or Firm* — Knobbe, Martens, Olson & Bear, LLP.

(57) **ABSTRACT**

Methods and devices are disclosed for treating the vertebral column. An integrated fixation plate and spacer having a retaining structure within the screw holes of the fixation plate to resist backout of screws attaching the fixation plate to the bone is provided. A movable joint may be provided between the fixation plate and spacer. In some embodiments, a screw hole insert is also provided to resist shear forces acting between the screw and fixation plate. In some embodiments, an integrated fixation plate and spacer system is provided, comprising two or more integrated fixation plate and spacer implants, wherein the fixation plates of each implant has a complementary configuration to allow attachment of the implants at adjacent intervertebral spaces. Alternative fixation systems are also contemplated.

15 Claims, 36 Drawing Sheets

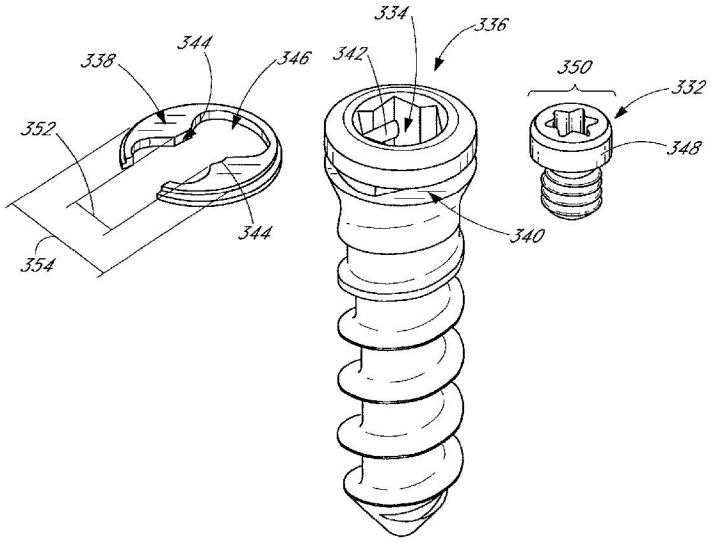

GLOBUS EX. 1033

U.S. PATENT DOCUMENTS

4,401,112	A	8/1983	Rezaian	
4,484,570	A	11/1984	Sutter et al.	
4,554,914	A	11/1985	Kapp et al.	
4,599,086	A	7/1986	Doty	
4,834,757	A	5/1989	Brantigan	
4,892,545	A	1/1990	Day et al.	
4,904,261	A	2/1990	Dove et al.	
4,917,704	A	4/1990	Frey et al.	
4,955,908	A	9/1990	Frey et al.	
5,002,576	A	3/1991	Fuhrmann et al.	
5,053,036	A	10/1991	Perren et al.	
5,057,111	A	10/1991	Park	
5,085,660	A	2/1992	Lin	
5,147,361	A	9/1992	Ojima et al.	
5,176,709	A	1/1993	Branemark	
5,192,327	A	3/1993	Brantigan	
5,269,784	A	12/1993	Mast	
5,275,601	A	1/1994	Gogolewski et al.	
5,304,179	A	4/1994	Wagner	
5,306,307	A	4/1994	Senter et al.	
5,364,399	A	11/1994	Lowery et al.	
5,397,364	A	3/1995	Kozak et al.	
5,458,641	A	10/1995	Ramirez Jimenez	
5,474,555	A	12/1995	Puno et al.	
5,501,684	A	3/1996	Schlapfer et al.	
5,520,690	A	5/1996	Errico et al.	
5,522,899	A	6/1996	Michaelson	
5,558,674	A	9/1996	Heggeness et al.	
5,578,034	A	11/1996	Estes	
5,607,426	A	3/1997	Ralph et al.	
5,607,428	A *	3/1997	Lin	606/287
5,609,635	A	3/1997	Michelson	
5,616,144	A	4/1997	Yapp et al.	
5,643,265	A	7/1997	Errico et al.	
5,665,089	A	9/1997	Dall et al.	
5,676,666	A	10/1997	Oxland et al.	
5,681,311	A	10/1997	Foley et al.	
5,713,900	A	2/1998	Benzel et al.	
5,735,853	A	4/1998	Olerud	
5,743,914	A	4/1998	Skiba	
5,807,396	A	9/1998	Raveh	
5,810,823	A	9/1998	Klaue et al.	
5,851,207	A	12/1998	Cesarone	
5,876,402	A	3/1999	Errico et al.	
5,888,223	A	3/1999	Bray	
5,902,303	A *	5/1999	Eckhof et al.	606/60
5,904,683	A	5/1999	Pohndorf et al.	
5,925,048	A	7/1999	Ahmad et al.	
5,931,838	A	8/1999	Vito	
5,951,558	A	9/1999	Fiz	
5,954,722	A *	9/1999	Bono	606/281
6,001,130	A	12/1999	Bryan et al.	
6,030,389	A	2/2000	Wagner et al.	
6,066,175	A	5/2000	Henderson et al.	
6,117,173	A	9/2000	Taddia et al.	
6,139,550	A	10/2000	Michelson	
6,152,927	A	11/2000	Farris et al.	
6,193,721	B1	2/2001	Michelson	
6,206,881	B1	3/2001	Frigg et al.	
6,231,610	B1 *	5/2001	Geisler	623/17.11
6,235,033	B1	5/2001	Brace et al.	
6,235,034	B1	5/2001	Bray	
6,235,059	B1 *	5/2001	Benezech et al.	623/17.16
6,241,731	B1	6/2001	Fiz	
6,261,291	B1	7/2001	Talaber et al.	
6,273,889	B1	8/2001	Richelsoph	
6,287,309	B1	9/2001	Baccelli et al.	
6,302,883	B1	10/2001	Bono	
6,306,136	B1	10/2001	Baccelli	
6,306,139	B1	10/2001	Fuentes	
6,331,179	B1	12/2001	Freid et al.	
6,342,055	B1	1/2002	Eisermann et al.	
6,383,186	B1	5/2002	Michelson	
6,402,755	B1	6/2002	Pisharodi	
6,413,259	B1	7/2002	Lyons et al.	
6,428,542	B1	8/2002	Michelson	
6,432,106	B1 *	8/2002	Fraser	623/17.11
6,454,769	B2	9/2002	Wagner et al.	
6,461,359	B1	10/2002	Tribus et al.	
6,503,250	B2	1/2003	Paul	
6,565,570	B2	5/2003	Sterett et al.	
6,575,975	B2	6/2003	Brace et al.	
6,579,290	B1 *	6/2003	Hardcastle et al.	606/247
6,599,290	B2	7/2003	Bailey et al.	
6,602,255	B1	8/2003	Campbell et al.	
6,602,256	B1	8/2003	Hayes	
6,623,486	B1	9/2003	Weaver et al.	
6,626,907	B2	9/2003	Campbell et al.	
6,626,911	B1 *	9/2003	Engman et al.	606/916
6,645,208	B2	11/2003	Apfelbaum et al.	
6,645,209	B2	11/2003	Hall, IV et al.	
6,652,525	B1	11/2003	Assaker et al.	
6,656,181	B2	12/2003	Dixon et al.	
6,669,700	B1	12/2003	Farris et al.	
6,682,563	B2	1/2004	Scharf	
6,695,845	B2	2/2004	Dixon et al.	
6,702,817	B2	3/2004	Beger et al.	
6,730,127	B2	5/2004	Michelson	
6,740,087	B2	5/2004	Knox	
6,746,450	B1	6/2004	Wall et al.	
6,755,833	B1	6/2004	Paul et al.	
6,780,186	B2	8/2004	Errico et al.	
6,884,242	B2	4/2005	LeHuec et al.	
6,890,334	B2 *	5/2005	Brace et al.	606/281
6,890,335	B2	5/2005	Grabowski et al.	
7,001,389	B1 *	2/2006	Navarro et al.	606/71
7,025,769	B1	4/2006	Ferree	
7,077,844	B2	7/2006	Michelson	
7,232,464	B2	6/2007	Mathieu et al.	
7,273,481	B2 *	9/2007	Lombardo et al.	606/86 A
7,306,605	B2	12/2007	Ross	
7,309,340	B2 *	12/2007	Fallin et al.	606/104
7,481,830	B2	1/2009	Wall et al.	
2001/0007941	A1	7/2001	Steiner et al.	
2002/0004683	A1 *	1/2002	Michelson	623/17.16
2002/0022843	A1 *	2/2002	Michelson	606/70
2002/0045898	A1	4/2002	Freid et al.	
2002/0169508	A1	11/2002	Songer et al.	
2003/0167091	A1	9/2003	Scharf	
2003/0171753	A1 *	9/2003	Collins et al.	606/69
2003/0187442	A1 *	10/2003	Richelsoph et al.	606/70
2003/0212399	A1	11/2003	Dinh et al.	
2004/0010254	A1 *	1/2004	Cook et al.	606/61
2004/0068319	A1	4/2004	Cordaro	
2004/0087951	A1	5/2004	Khalili	
2004/0097935	A1 *	5/2004	Richelsoph et al.	606/61
2004/0127904	A1 *	7/2004	Konieczynski et al.	606/70
2004/0181227	A1	9/2004	Khalili	
2004/0193269	A1	9/2004	Fraser et al.	
2004/0210217	A1	10/2004	Baynham et al.	
2004/0210219	A1 *	10/2004	Bray	606/69
2004/0230192	A1	11/2004	Graf	
2004/0260306	A1 *	12/2004	Fallin et al.	606/104
2005/0033433	A1 *	2/2005	Michelson	623/17.11
2005/0049593	A1 *	3/2005	Duong et al.	606/69
2005/0085913	A1 *	4/2005	Fraser et al.	623/17.11
2005/0101960	A1 *	5/2005	Fiere et al.	606/72
2005/0149191	A1 *	7/2005	Cragg et al.	623/17.11
2005/0177245	A1 *	8/2005	Leatherbury et al.	623/23.5
2005/0192576	A1	9/2005	Michelson	
2006/0122604	A1 *	6/2006	Gorhan et al.	606/69
2006/0200147	A1 *	9/2006	Ensign et al.	606/69
2006/0235403	A1	10/2006	Blain	
2006/0235409	A1	10/2006	Blain	
2006/0235412	A1	10/2006	Blain	
2006/0235518	A1	10/2006	Blain	
2006/0235533	A1	10/2006	Blain	
2006/0241616	A1 *	10/2006	Konieczynski et al.	606/69
2007/0055252	A1	3/2007	Blain	
2007/0213820	A1 *	9/2007	Magerl et al.	623/17.11

FOREIGN PATENT DOCUMENTS

DE	30 27 138	A1	12/1981
DE	30 27 138	C2	12/1981
DE	30 27 148	A1	12/1981
DE	30 27 148	C2	12/1981
DE	297 01 099	U1	4/1997

DE	197 02 201	C1	8/1998
DE	20 20074 015 912	U1	12/2004
EP	0 242 842	A2	10/1987
EP	0 242 842	A3	10/1987
EP	0 242 842	B1	10/1987
EP	0 974 319	A2	1/2000
EP	1 346 697	A2	9/2003
EP	1 470 803	A1	10/2004
FR	2 766 353	A1	1/1999
WO	WO 88/03781		6/1988
WO	WO 89/04150		5/1989
WO	WO 95/35067	A2	12/1995
WO	WO 95/35067	A3	12/1995
WO	WO 01/78615	A1	10/2001
WO	WO 03/017856	A1	3/2003
WO	WO 03/071966	A1	9/2003
WO	WO 2004/006792	A1	1/2004
WO	WO 2005/027760	A2	3/2005
WO	WO 2006/101837		9/2006

OTHER PUBLICATIONS

Mar. 26, 2009; Office Action for European Application No. 06738204.4 filed on Mar. 14, 2006.

Apr. 6, 2010; Office Action for European Application No. 06738204.4 filed on Mar. 14, 2006.

Apr. 5, 2011; Office Action for European Application No. 06738204.4 filed on Mar. 14, 2006.

May 10, 2011 Office Action for Japanese Application No. 2008/501962 filed on Mar. 14, 2006.

Dec. 8, 2010 Office Action for Australian Application No. 2006227755 filed on Mar. 14, 2006.

* cited by examiner

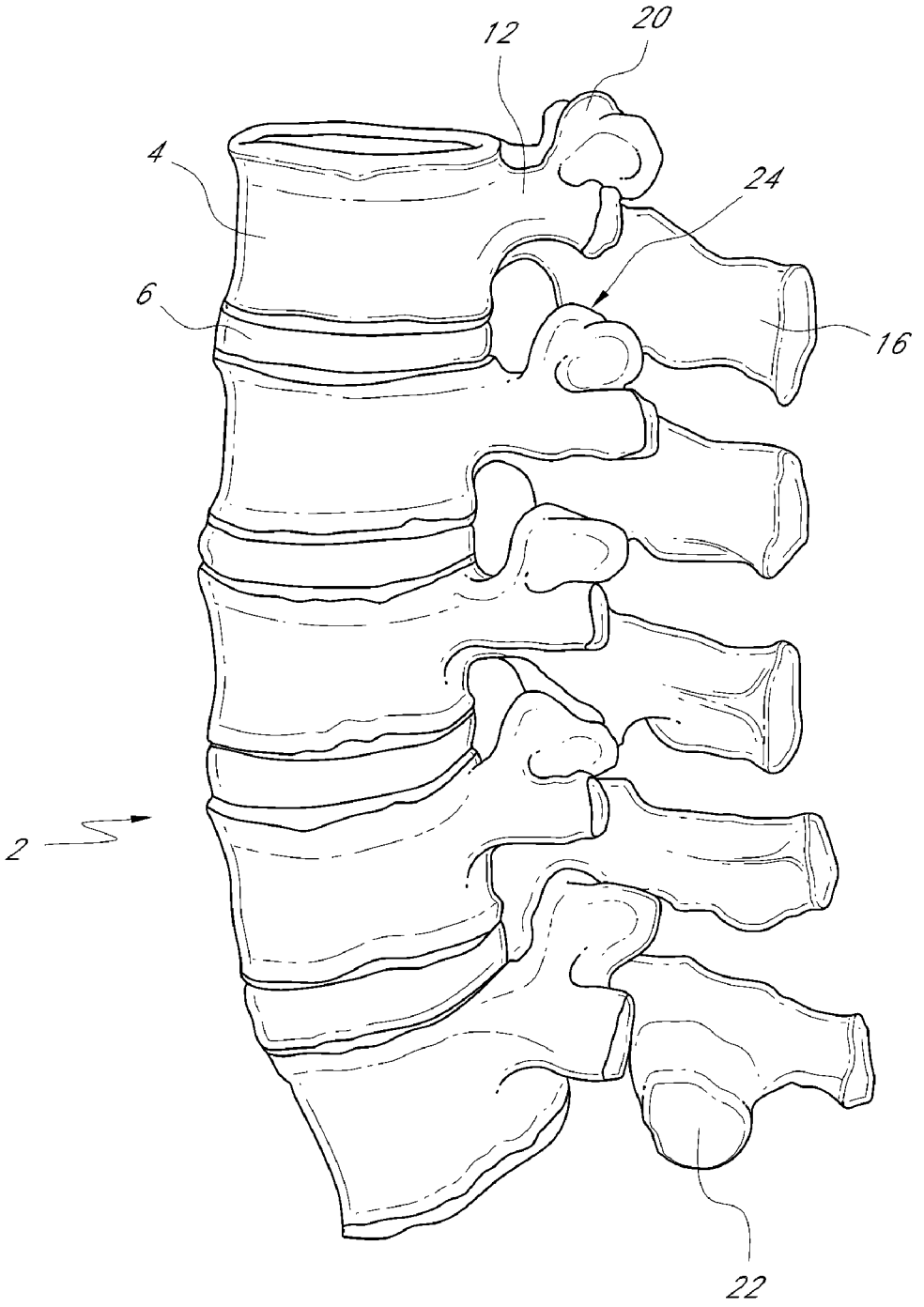

FIG. 1

FIG. 2A

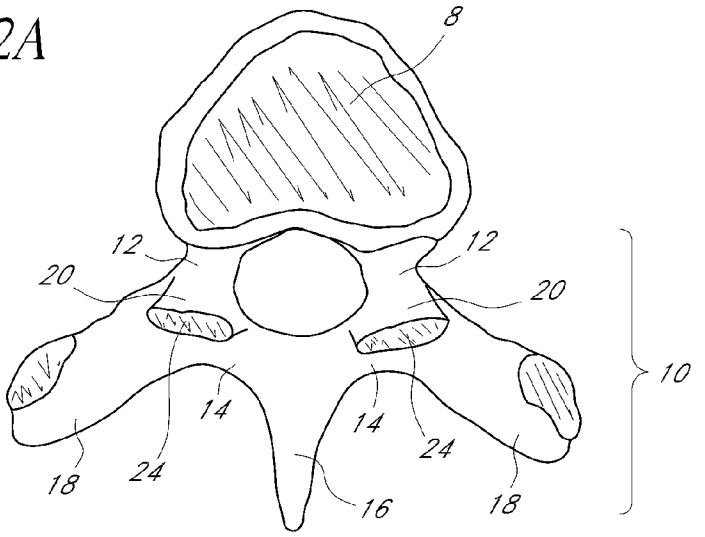

FIG. 2B

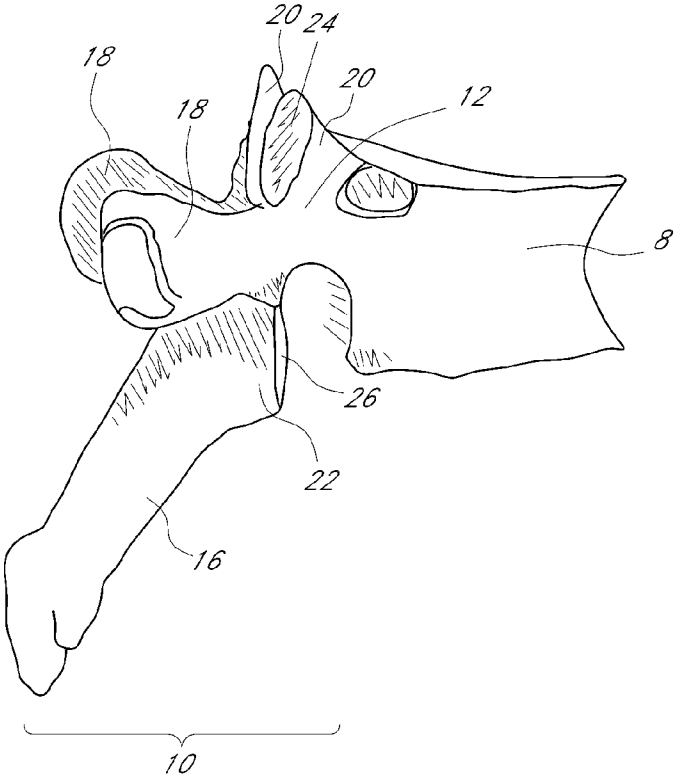

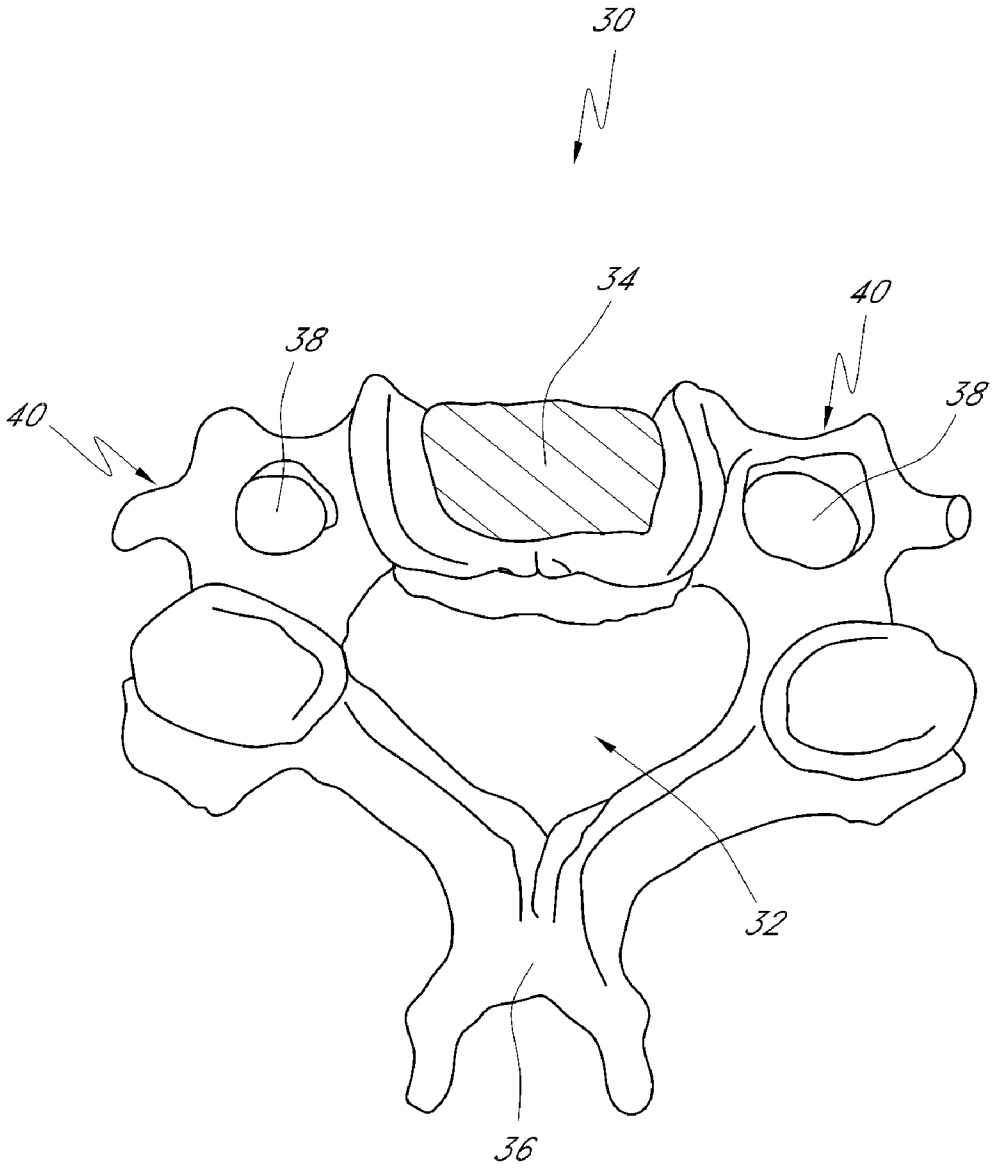

FIG. 3

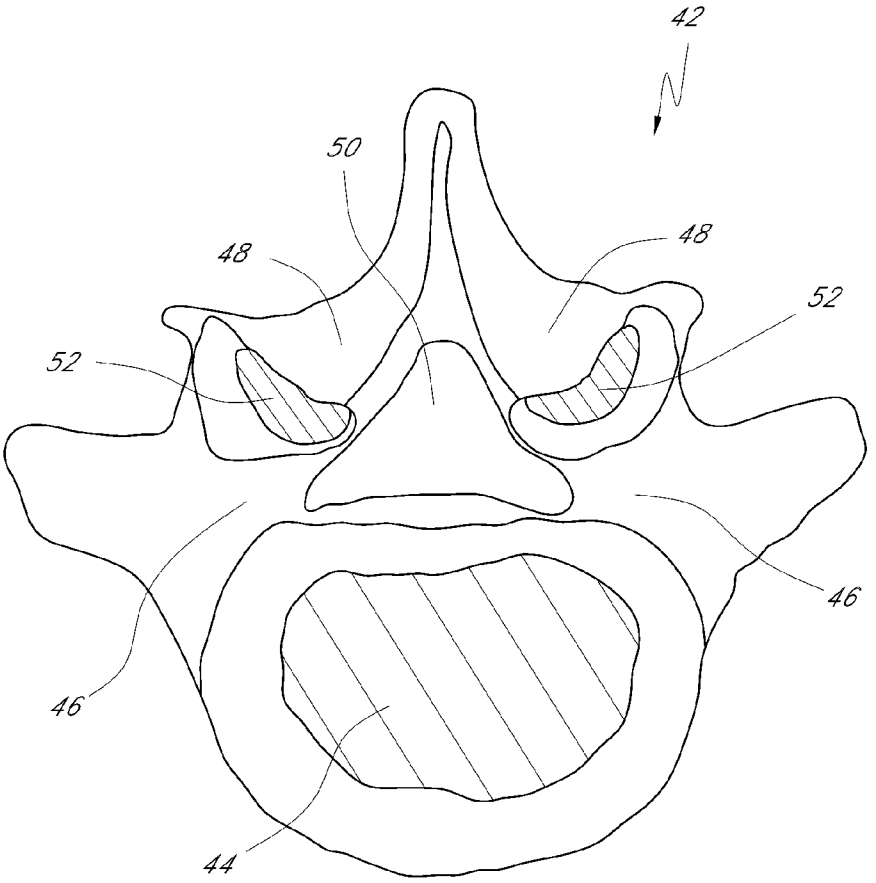

FIG. 4

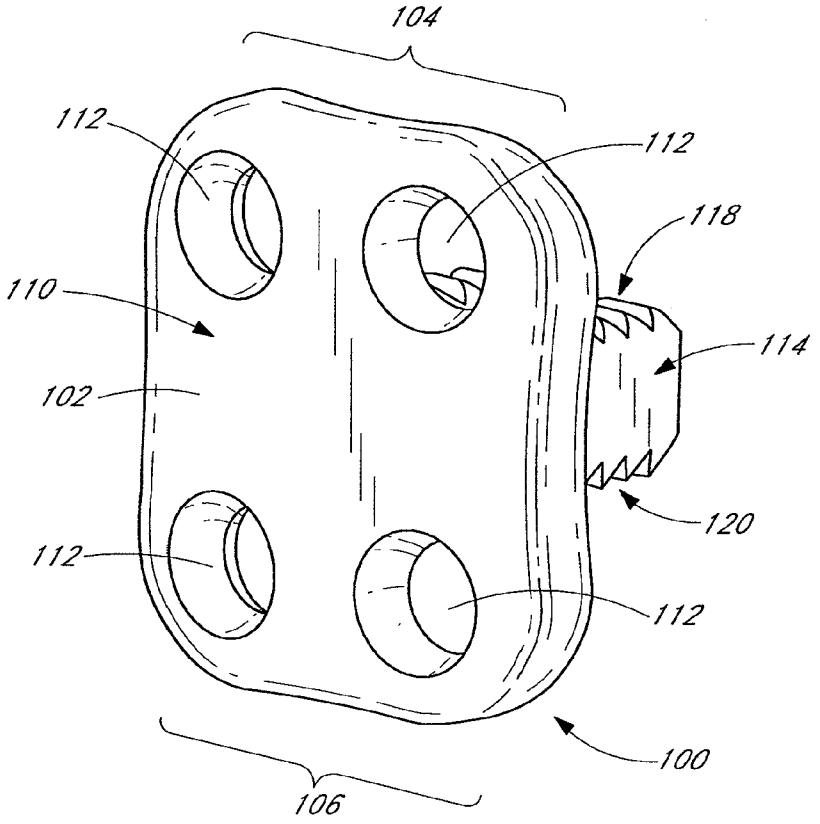

FIG. 5A

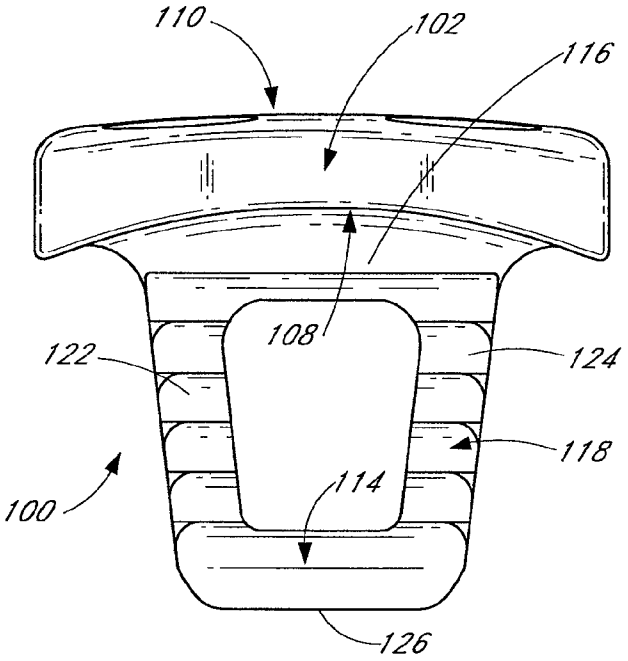
110
102
116
108
122
124
118
100
114
126

FIG. 5B

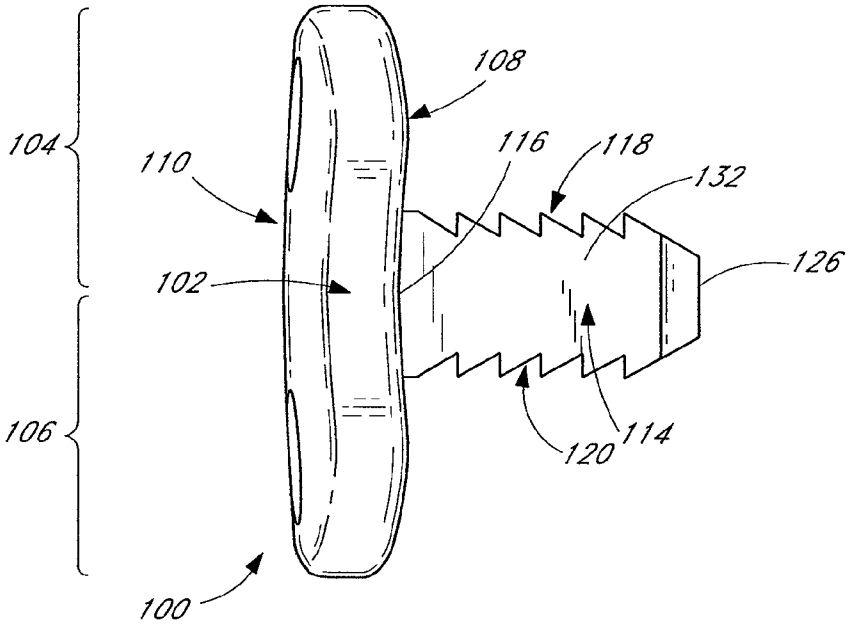
108
104
110
116
118
132
126
102
106
120
114
100

FIG. 5C

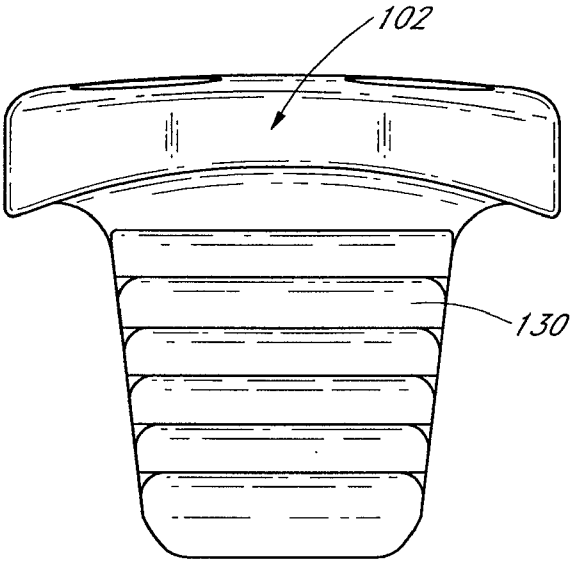

FIG. 6

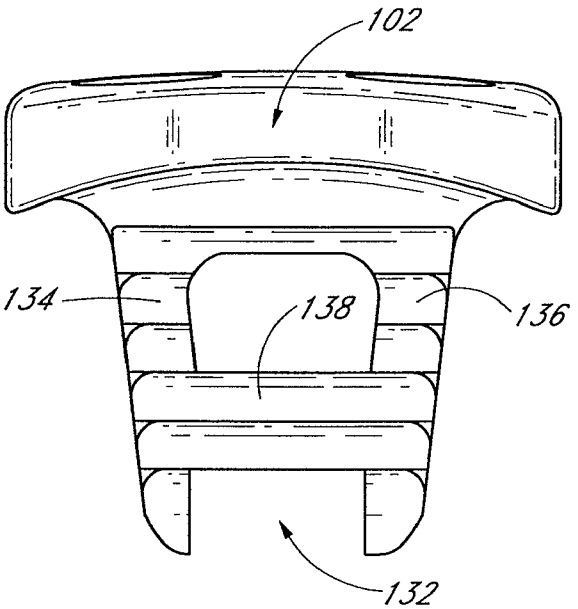

FIG. 7

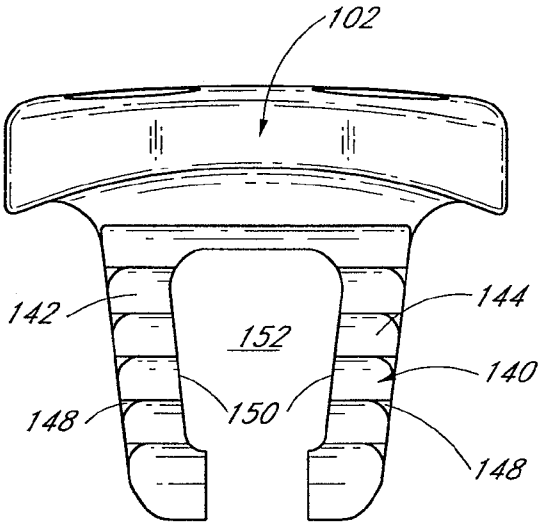

FIG. 8A

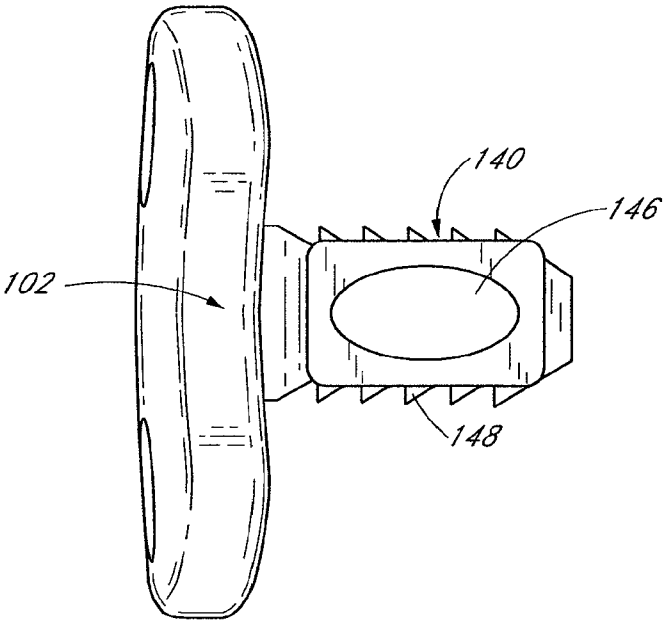

FIG. 8B

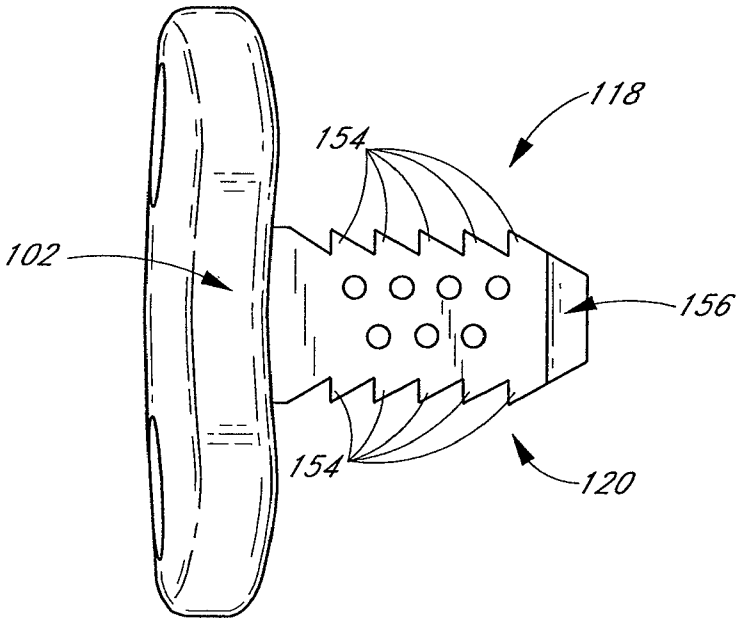

FIG. 9A

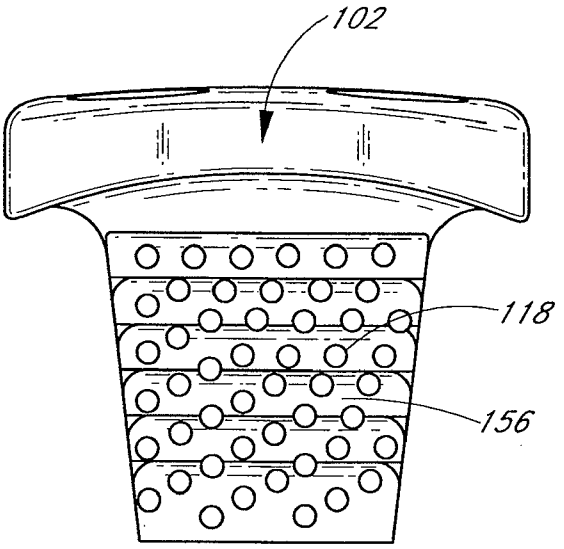

FIG. 9B

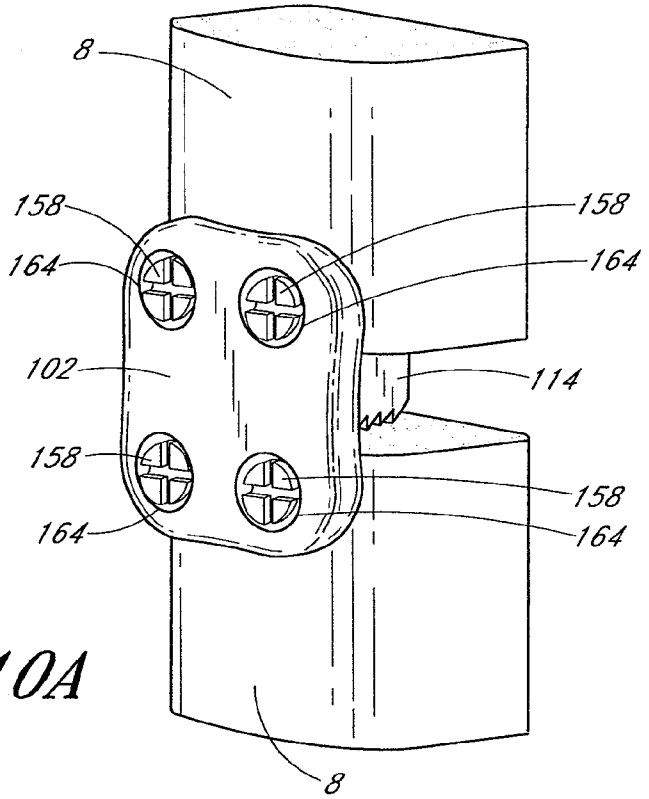

FIG. 10A

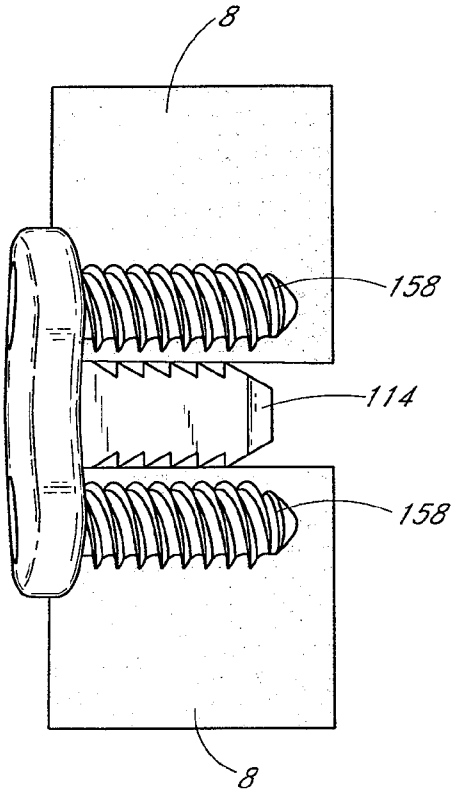

FIG. 10B

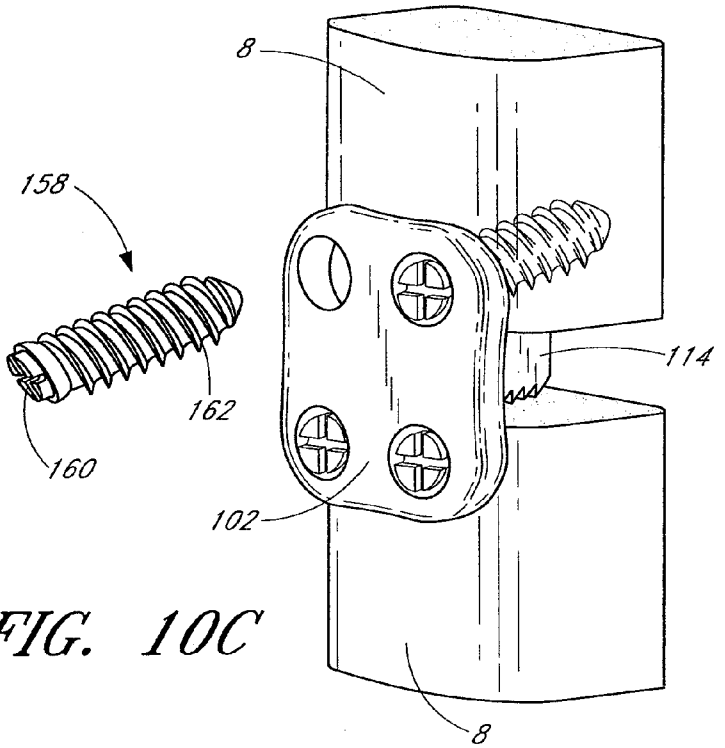

FIG. 10C

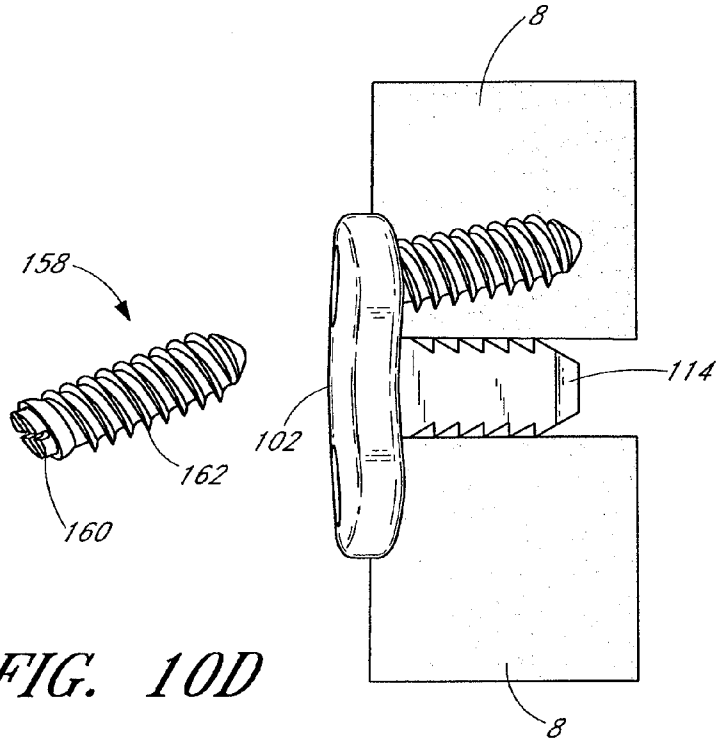

FIG. 10D

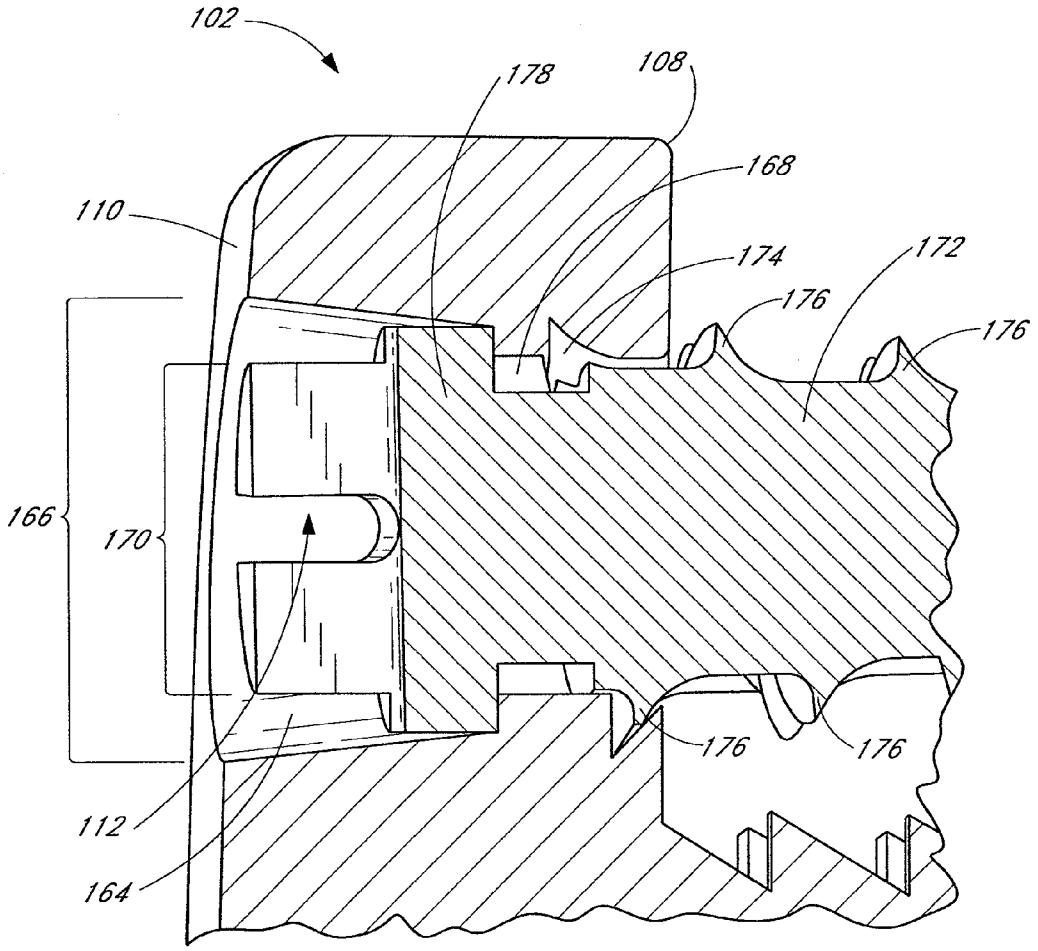

FIG. 11

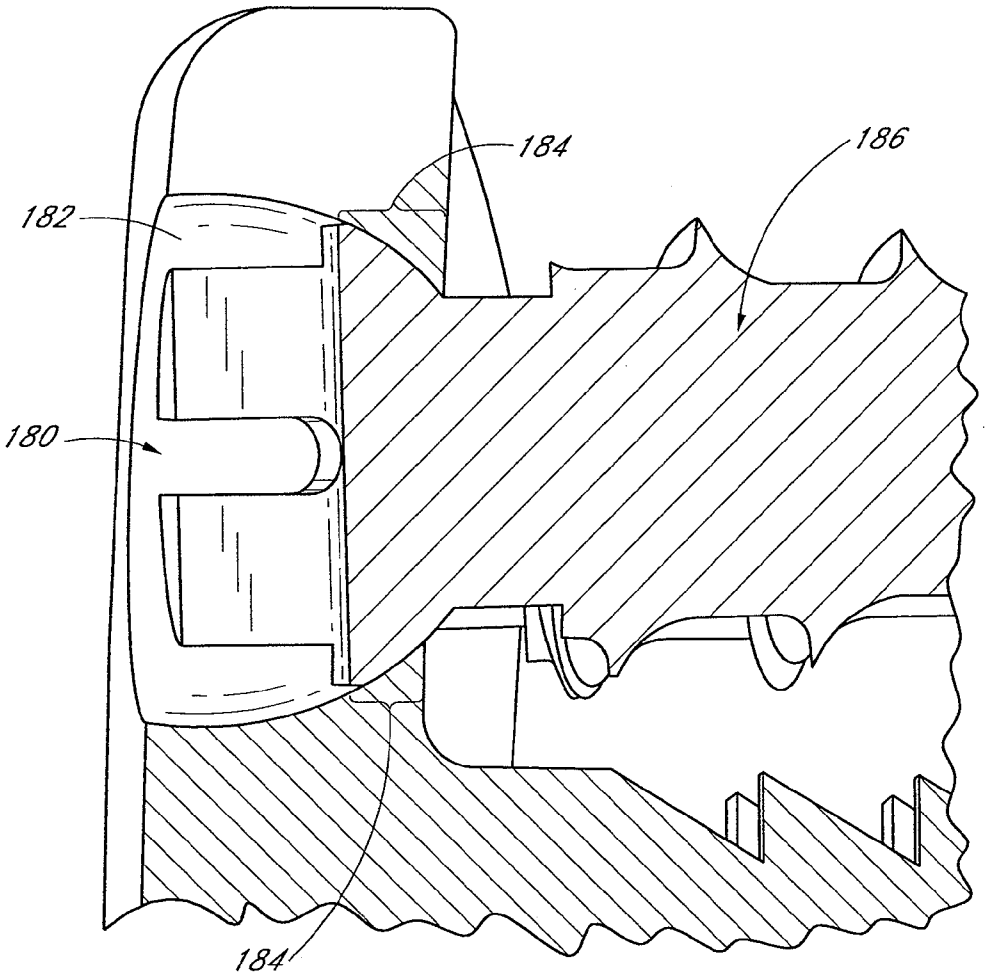

FIG. 12

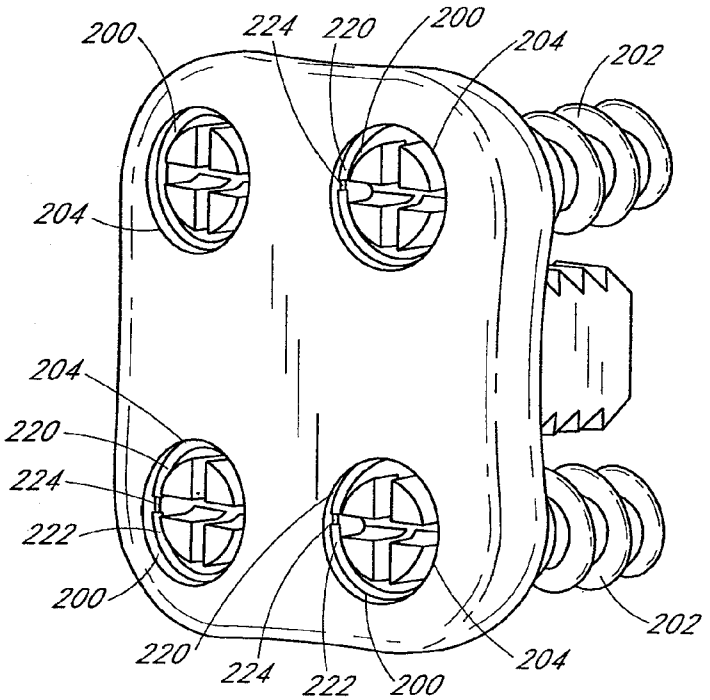

FIG. 13A

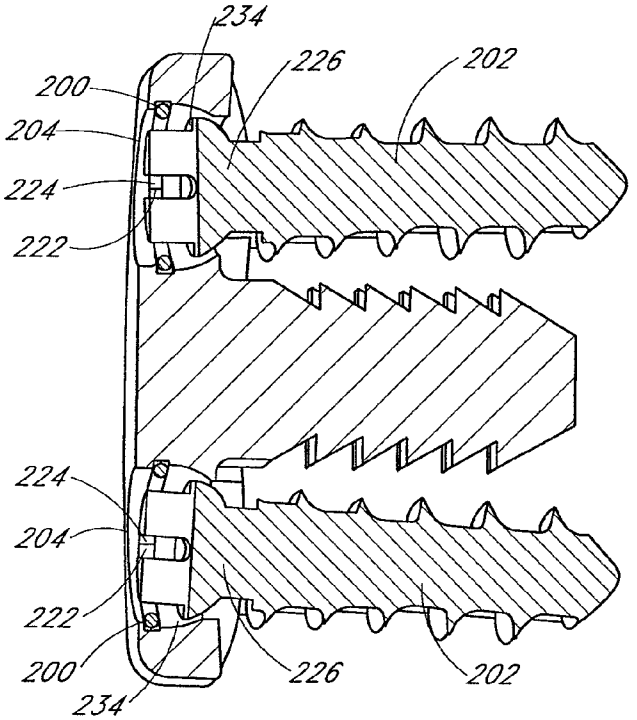

FIG. 13B

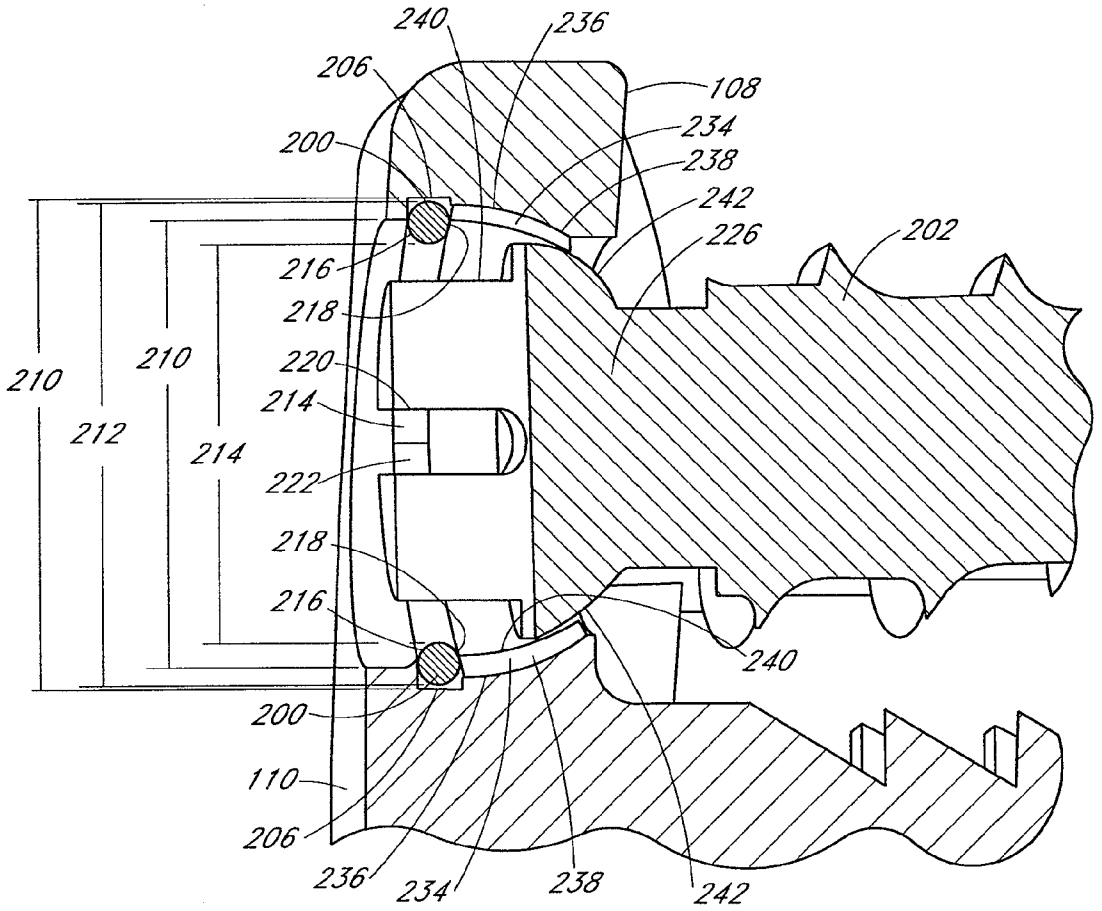
240
236
206
108
234
200
238
242
226
202
216
218
210
210
220
214
212
214
222
218
216
240
200
110
206
236
234
238
242

FIG. 13C

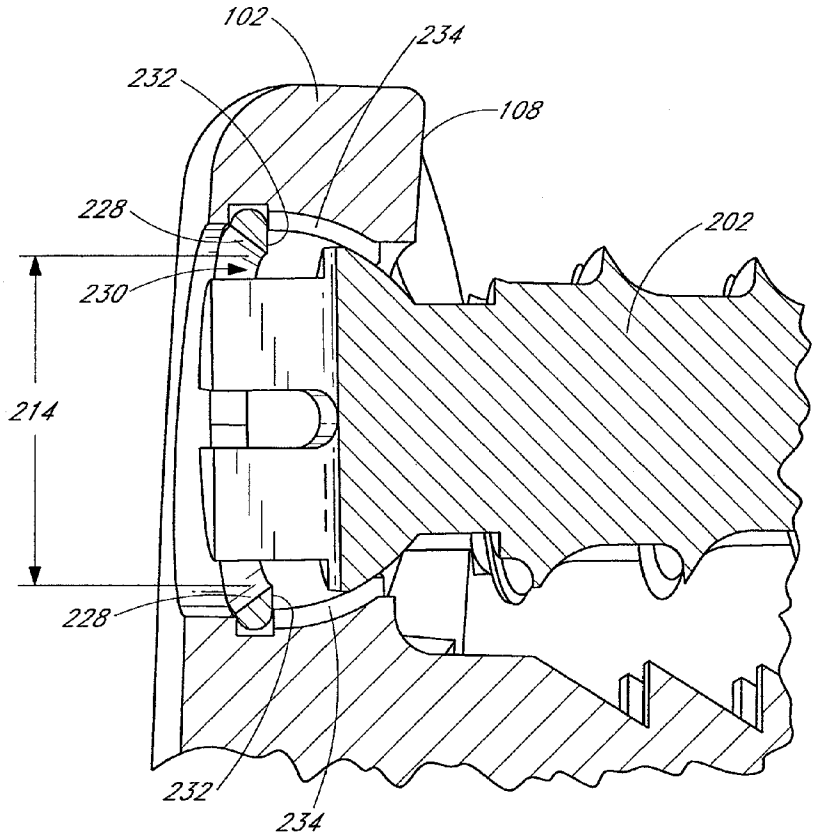

FIG. 14

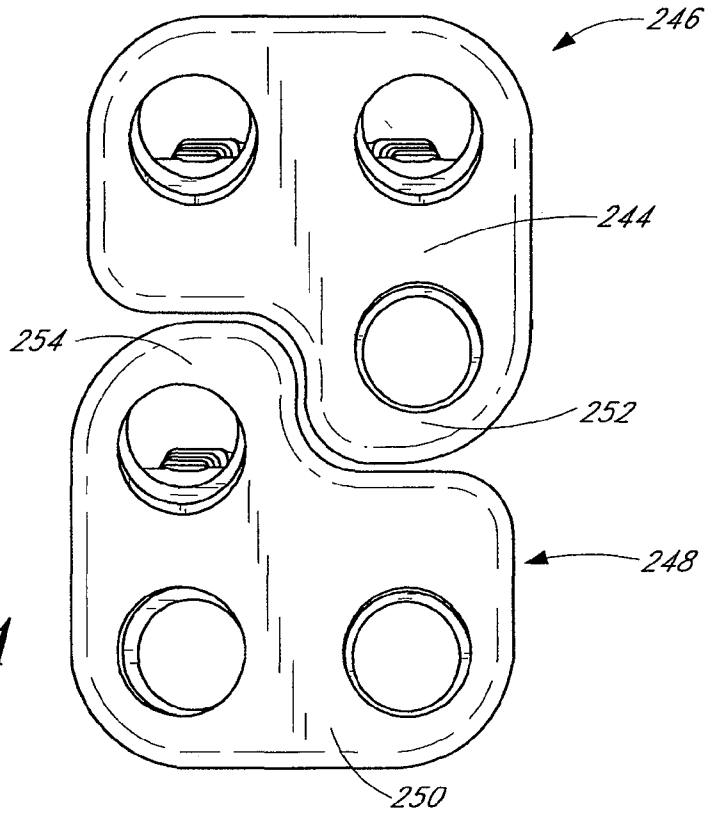

FIG. 15A

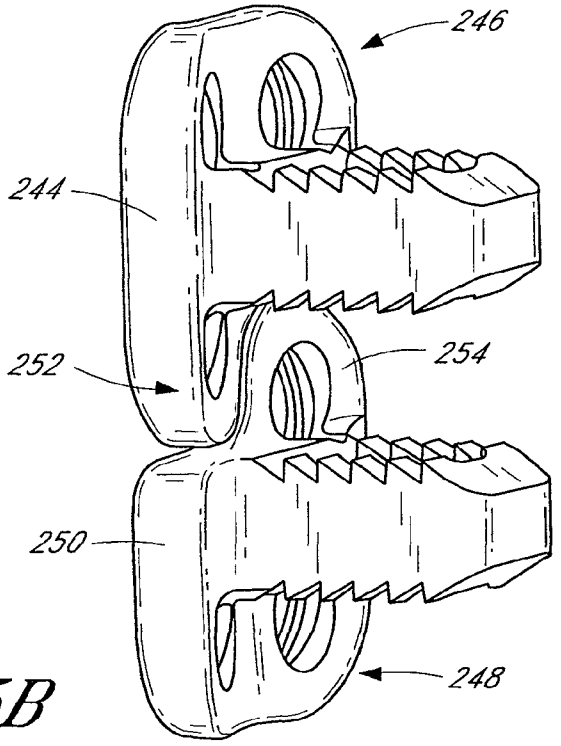

FIG. 15B

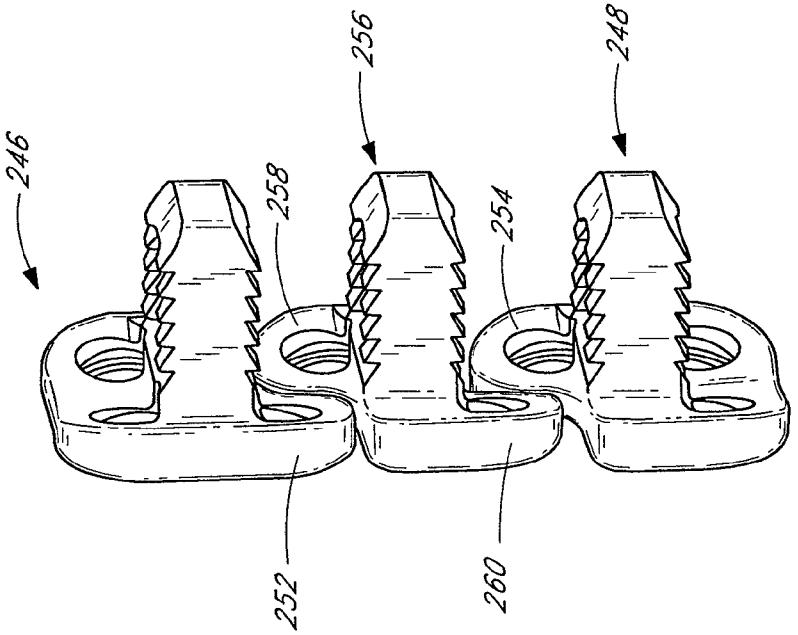

FIG. 16B

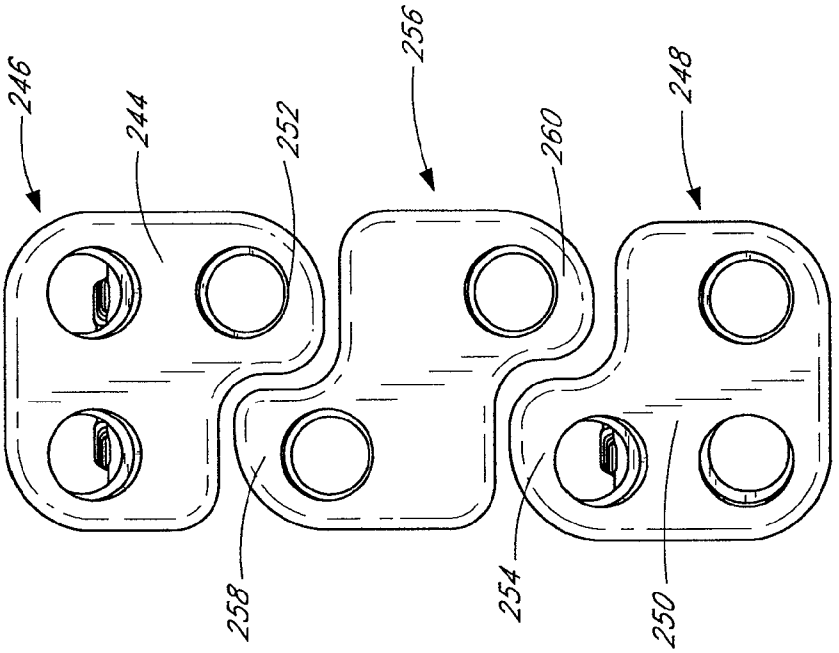

FIG. 16A

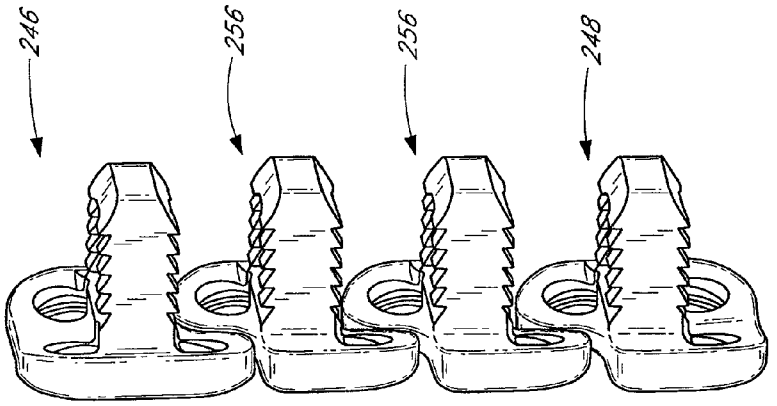

FIG. 17B

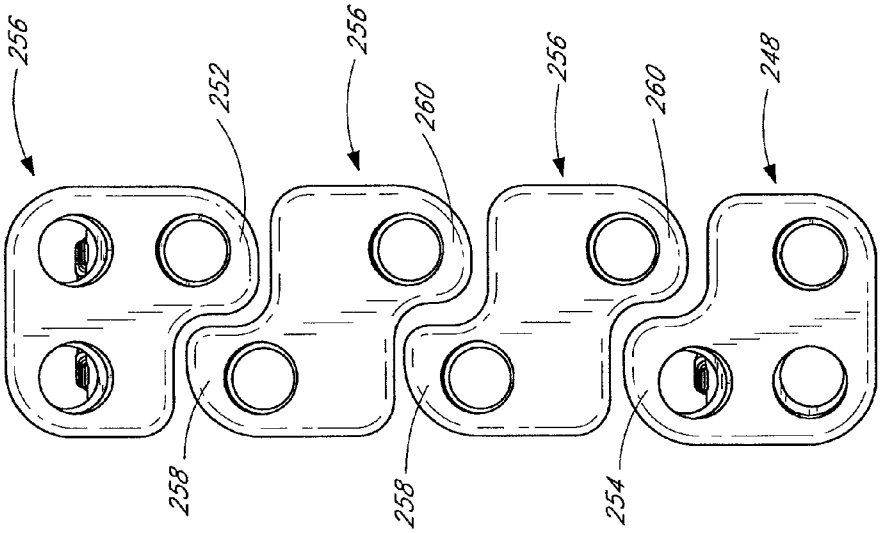

FIG. 17A

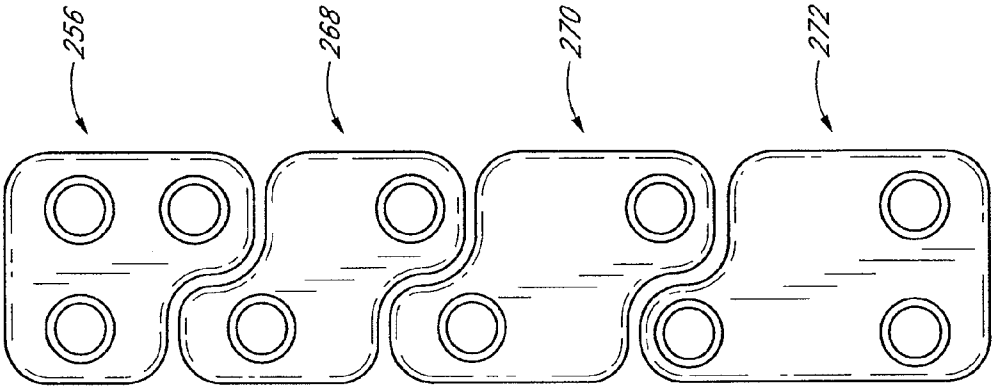

FIG. 19

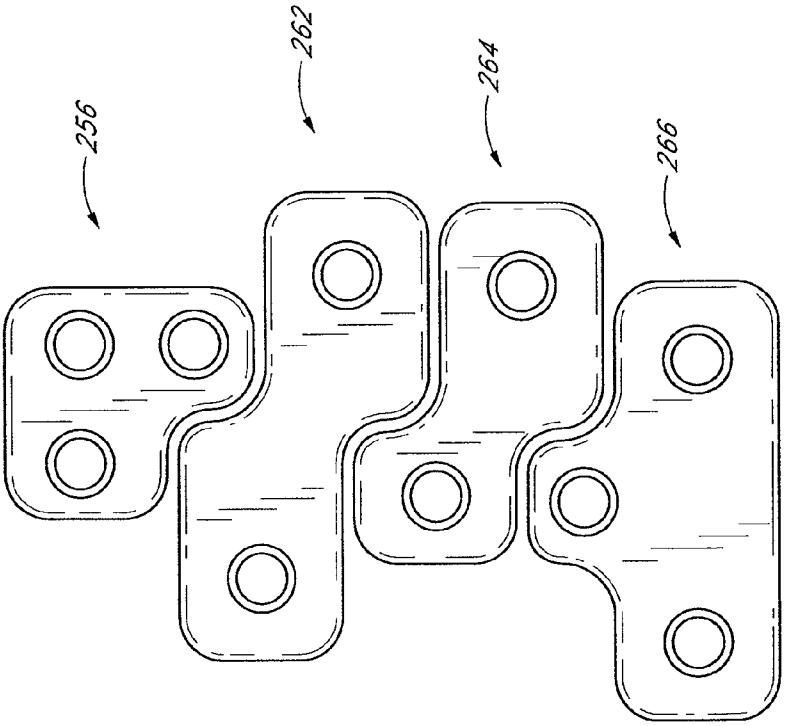

FIG. 18

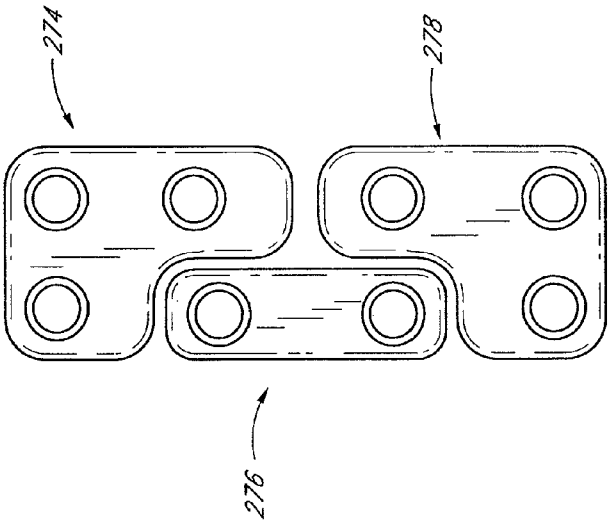

FIG. 21

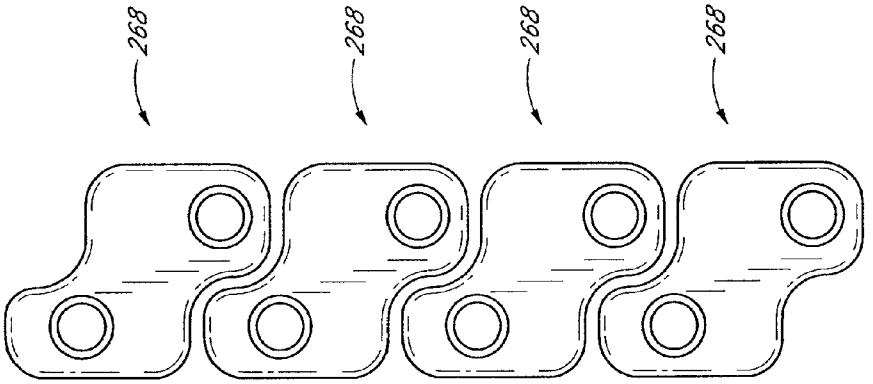

FIG. 20

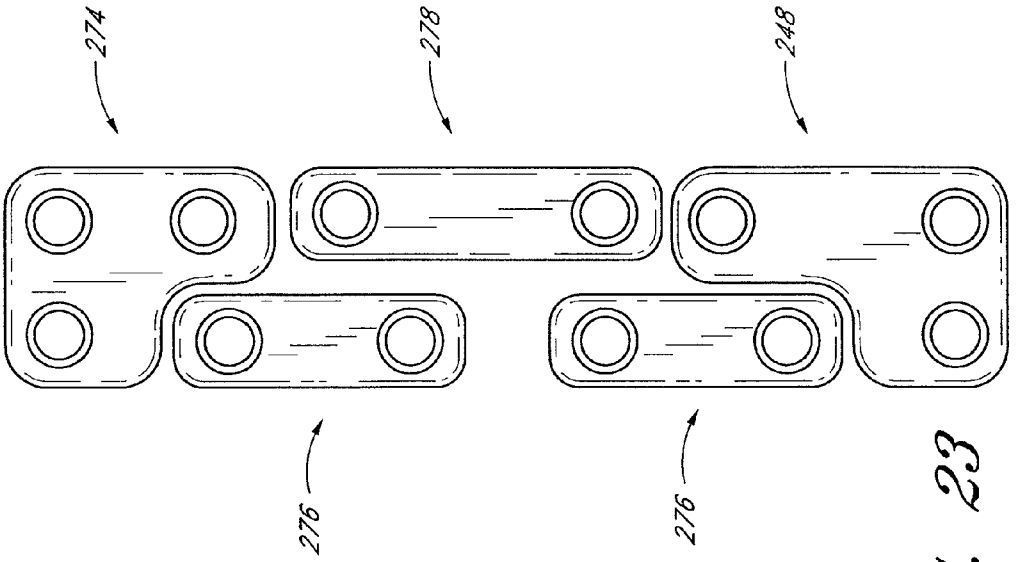

FIG. 23

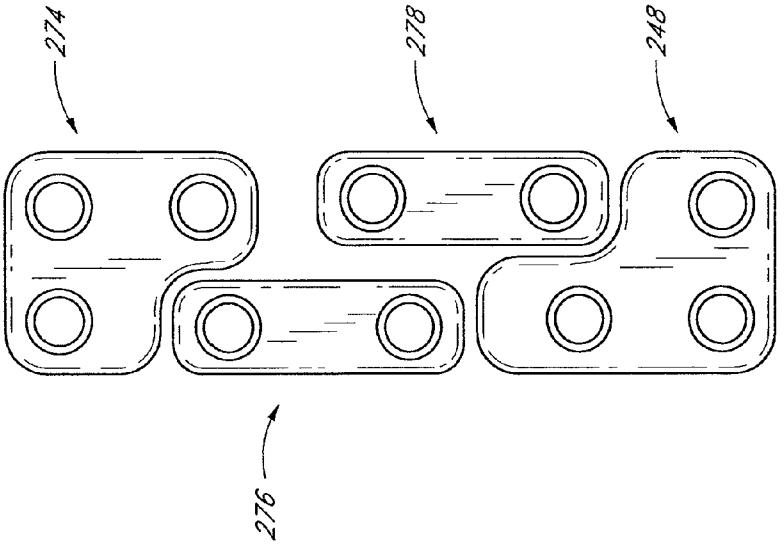

FIG. 22

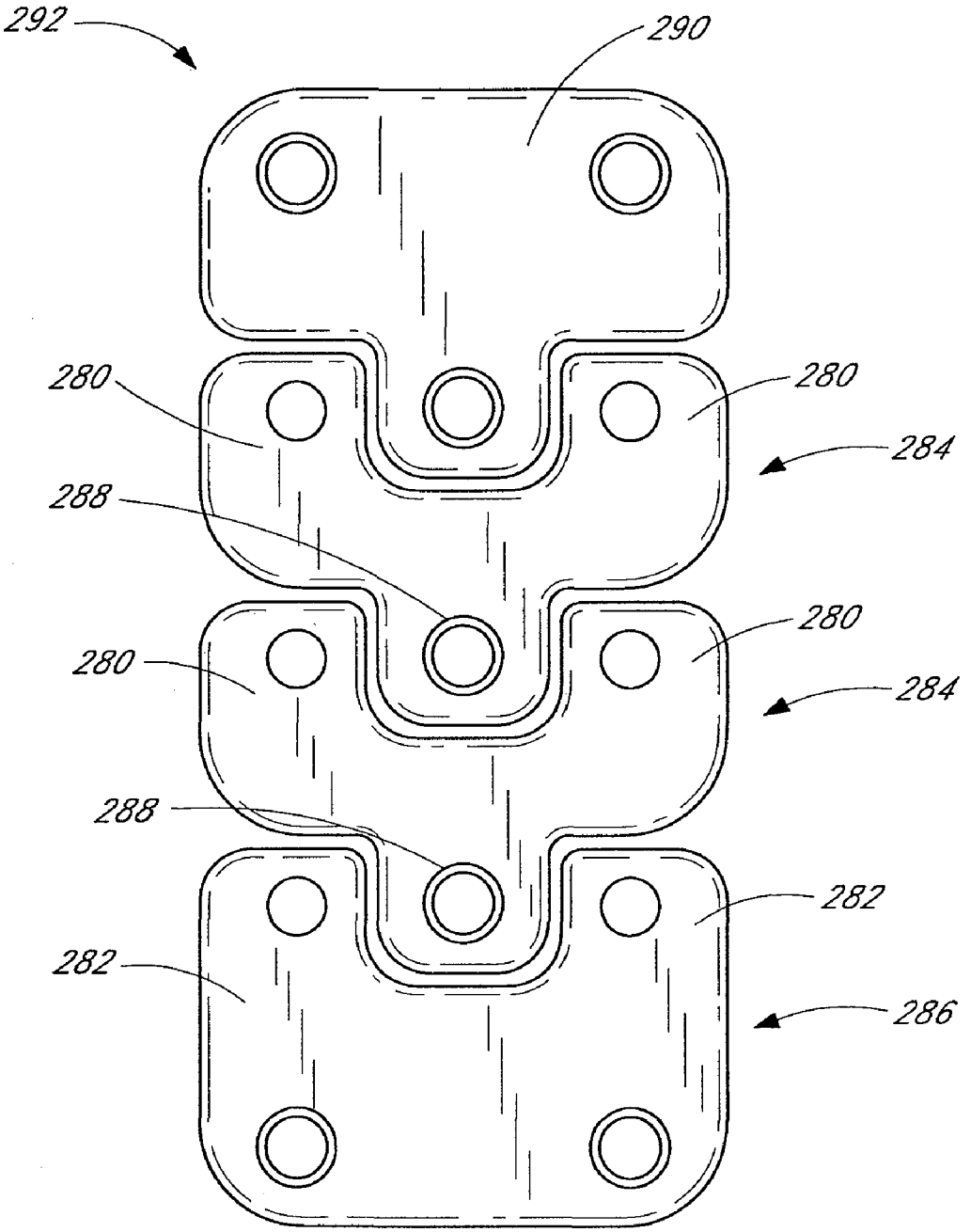

FIG. 24

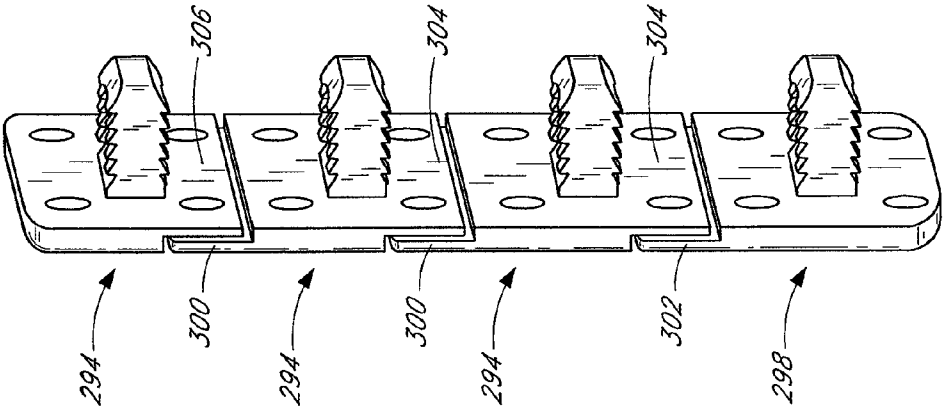

FIG. 25B

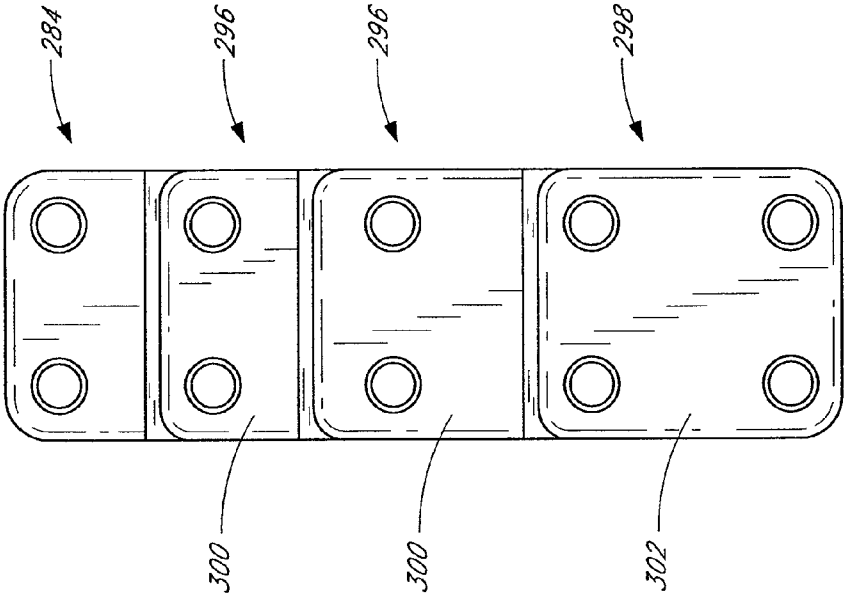

FIG. 25A

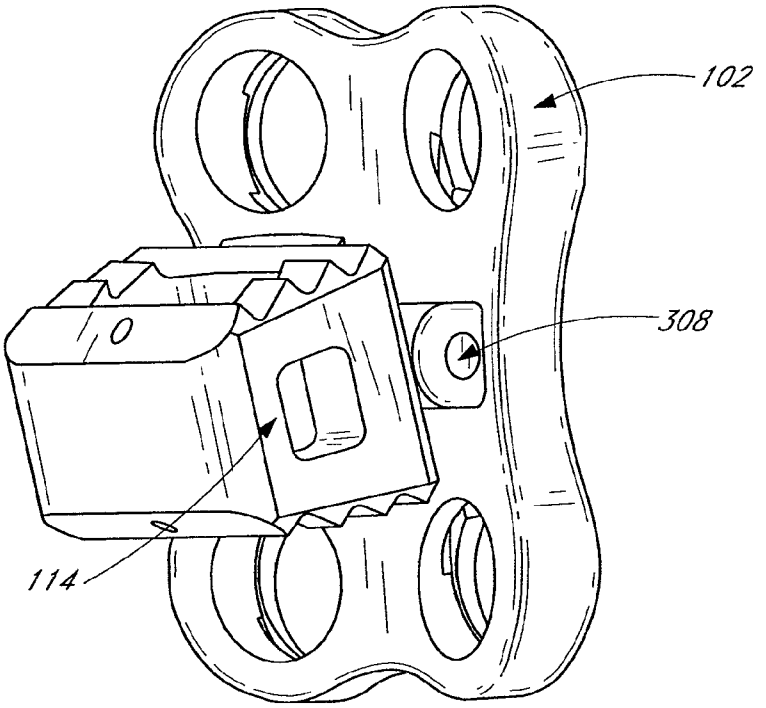

FIG. 26A

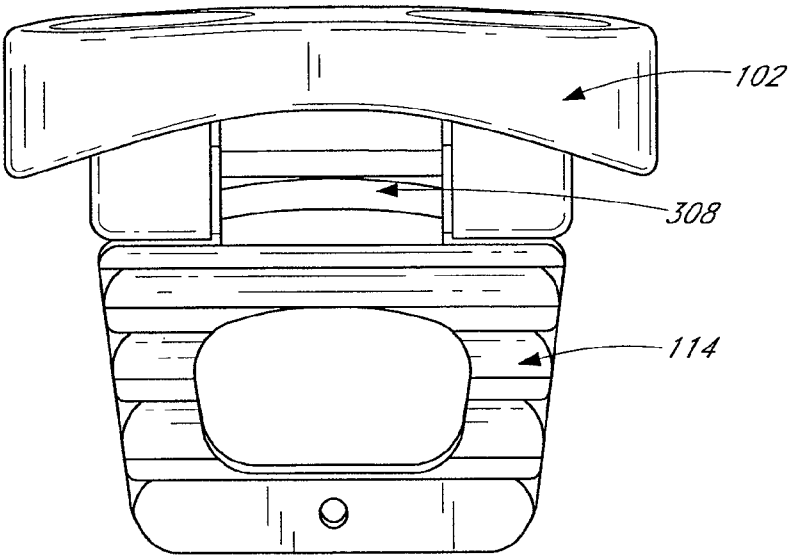

FIG. 26B

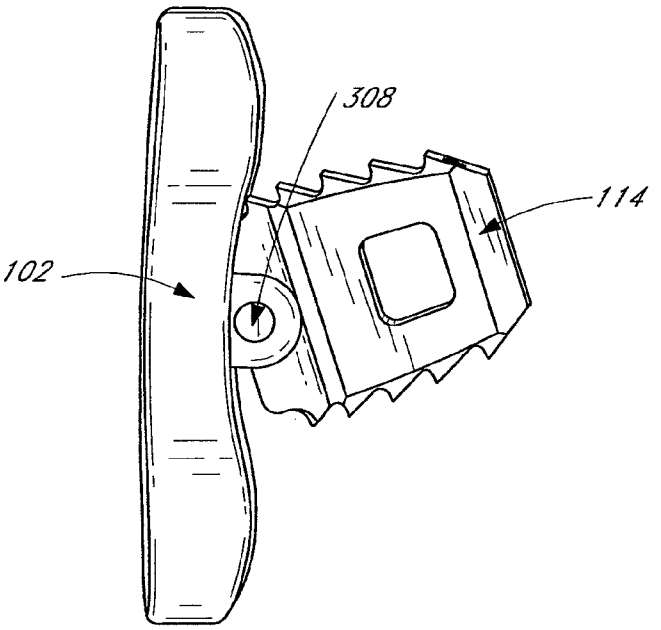

FIG. 26C

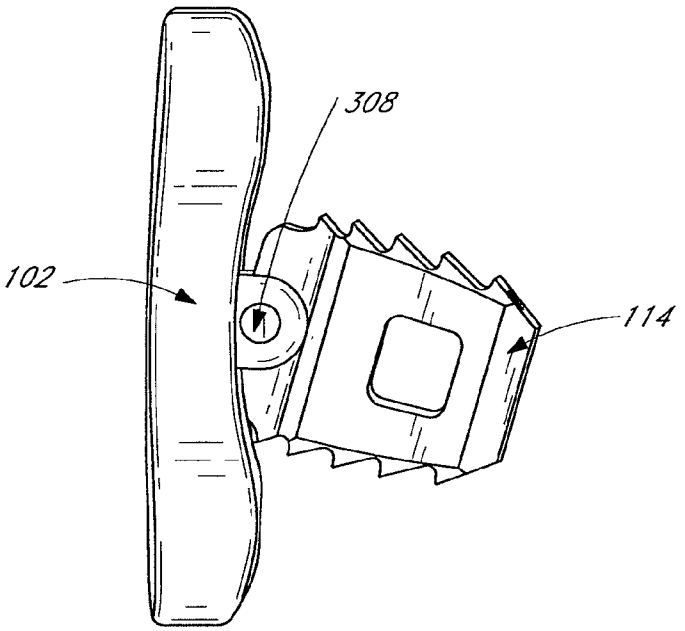

FIG. 26D

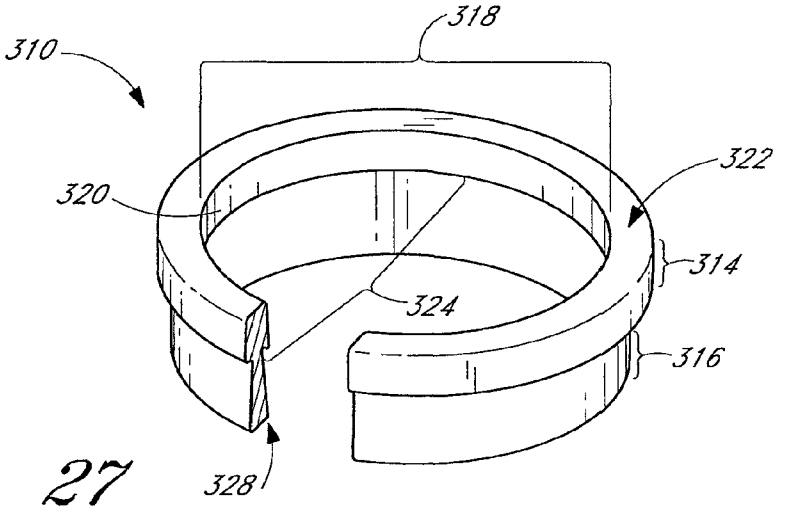
318
310
322
320
314
324
316
328

FIG. 27

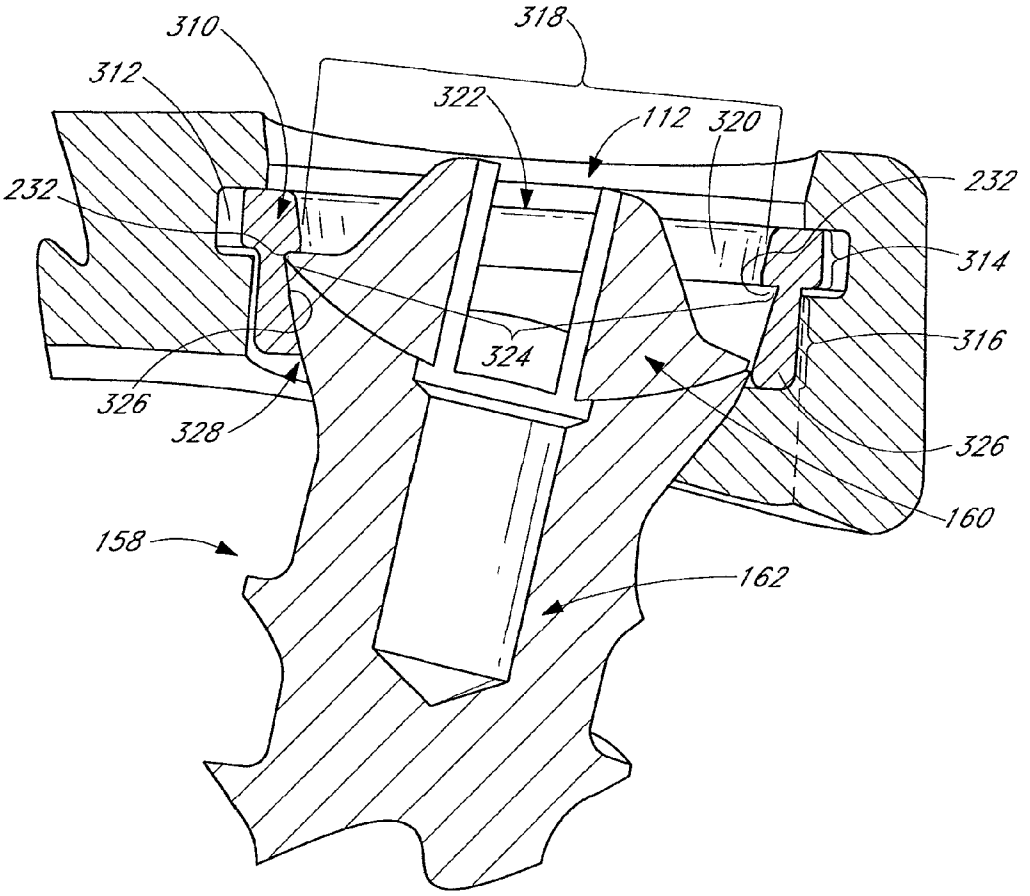
310
318
312
322
112
320
232
232
314
324
316
326
328
326
160
158
162

FIG. 28

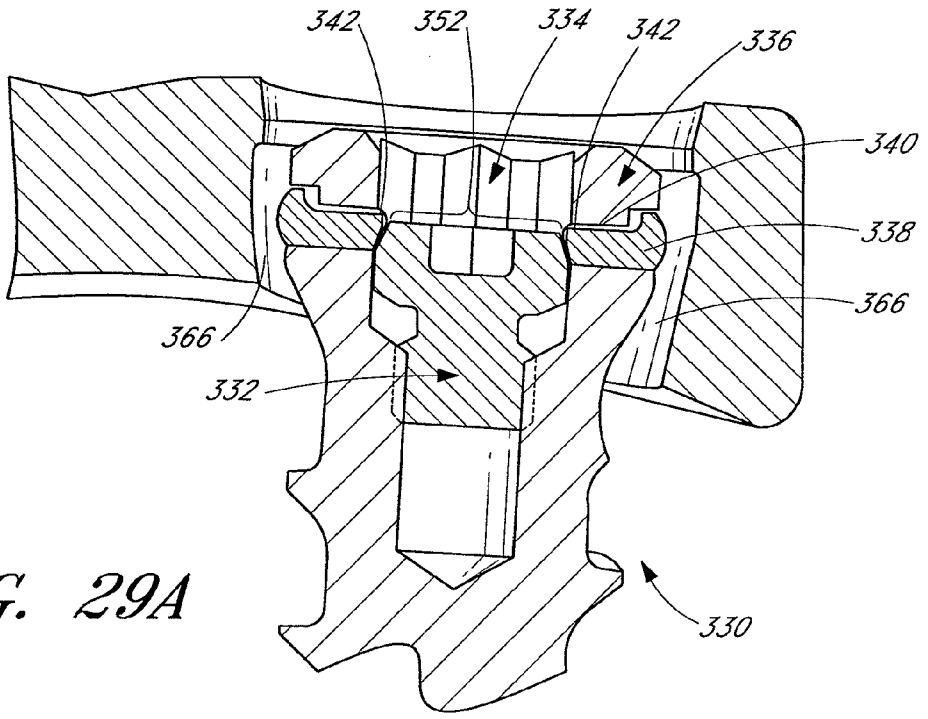

FIG. 29A

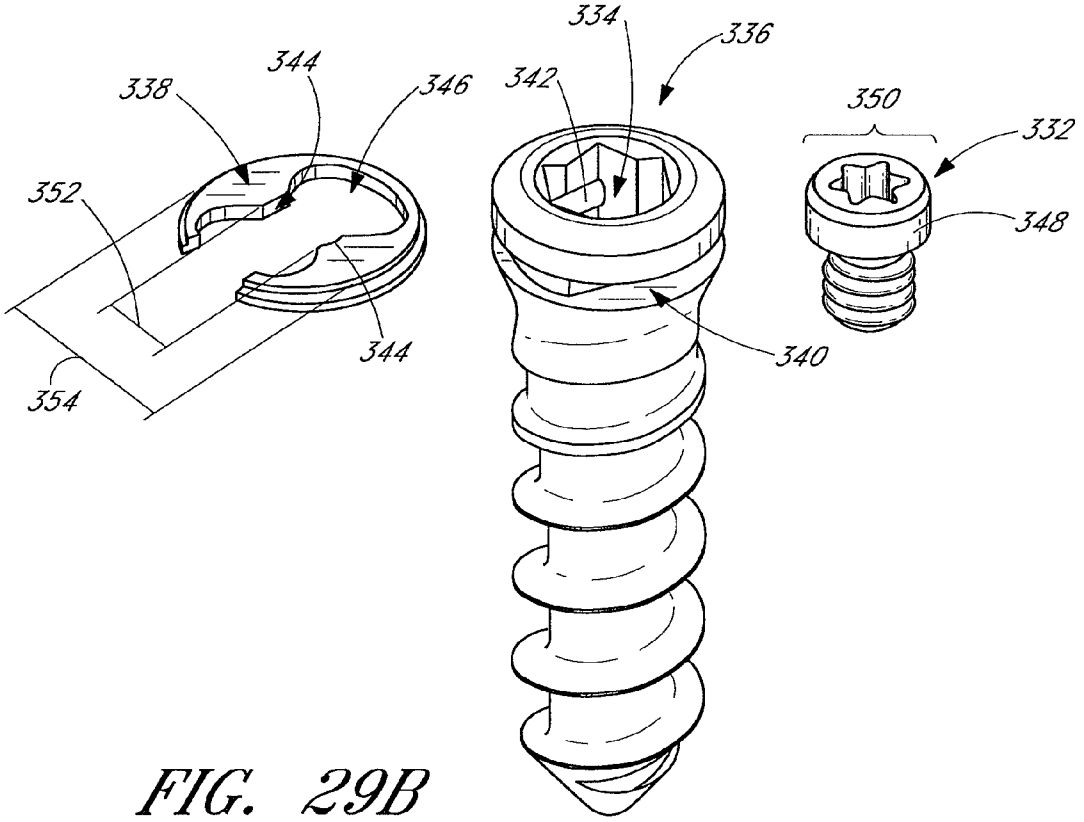

FIG. 29B

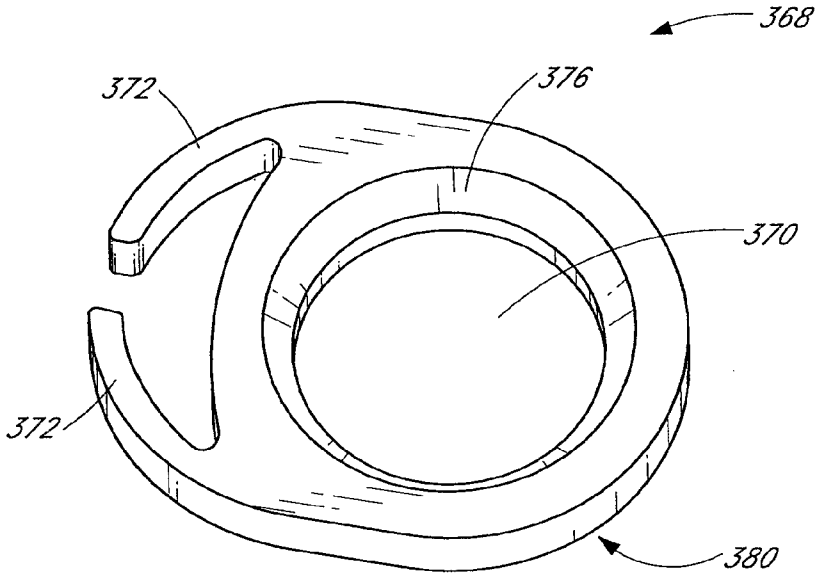

FIG. 30A

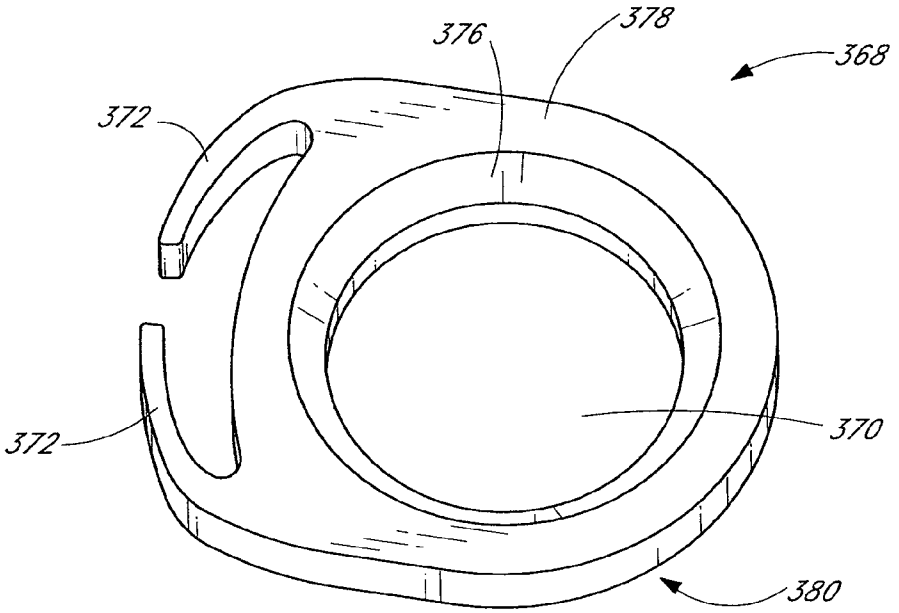

FIG. 30B

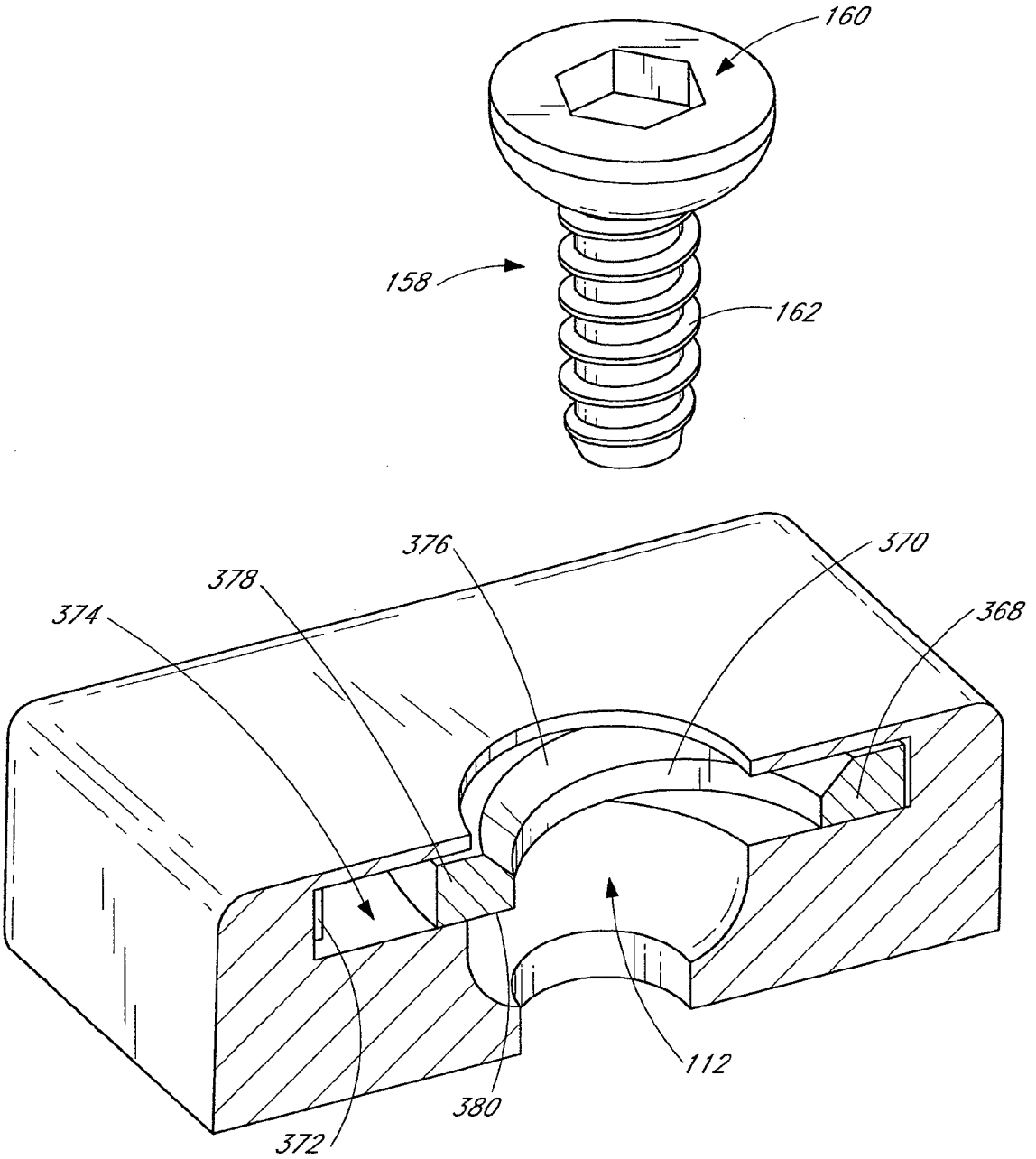

FIG. 31

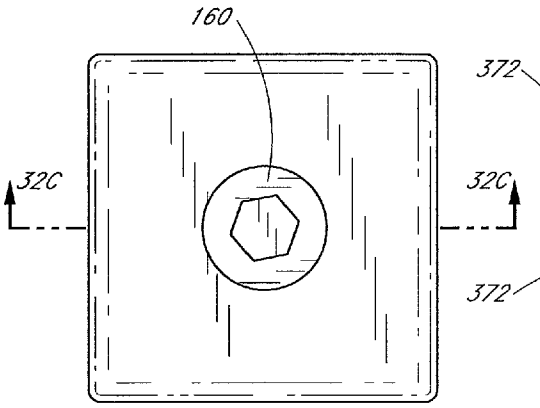

FIG. 32A

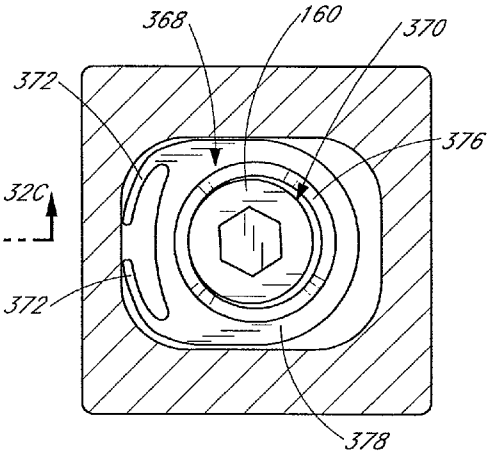

FIG. 32B

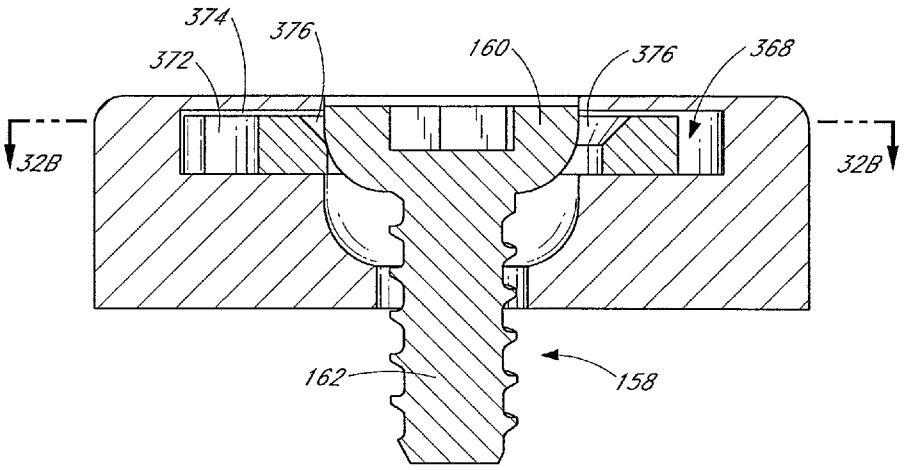

FIG. 32C

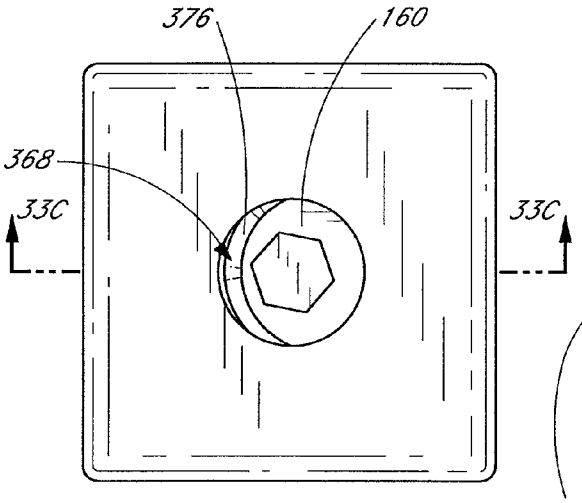

FIG. 33A

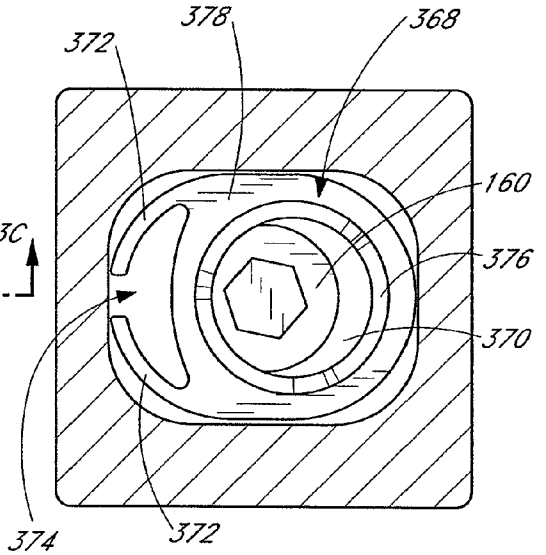

FIG. 33B

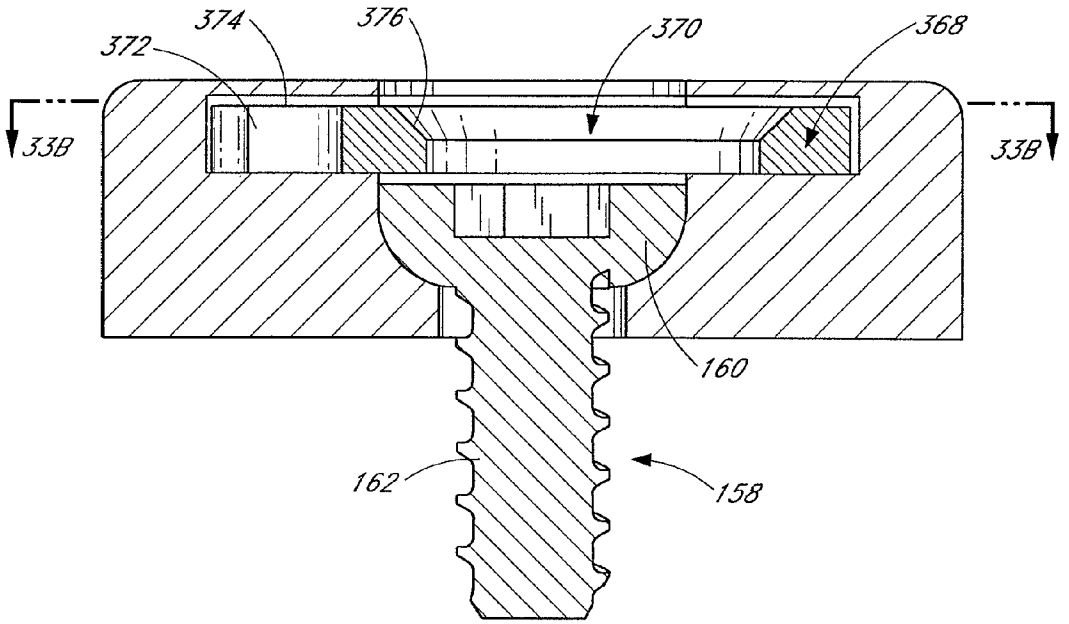

FIG. 33C

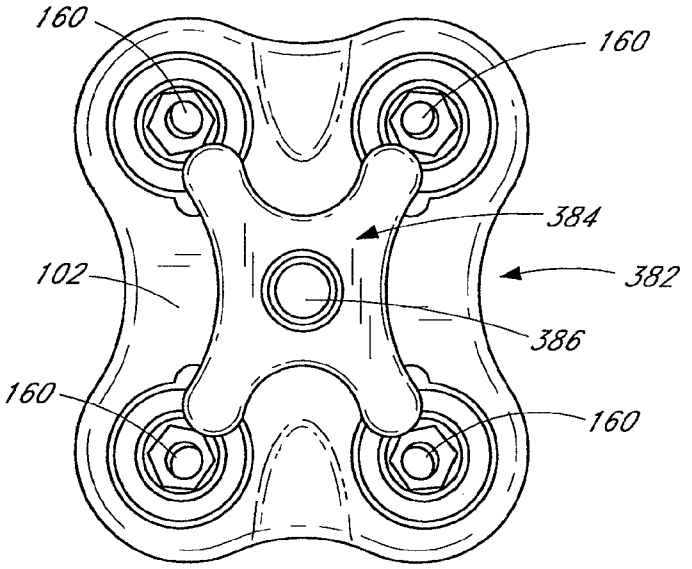

FIG. 34A

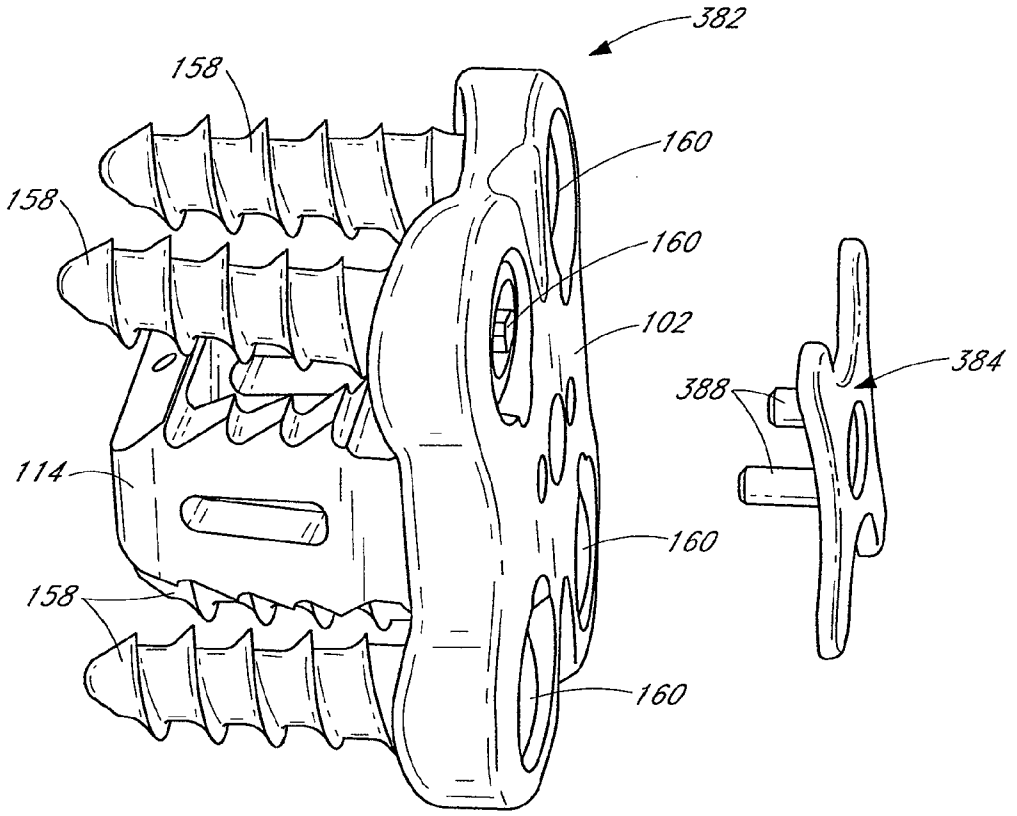

FIG. 34B

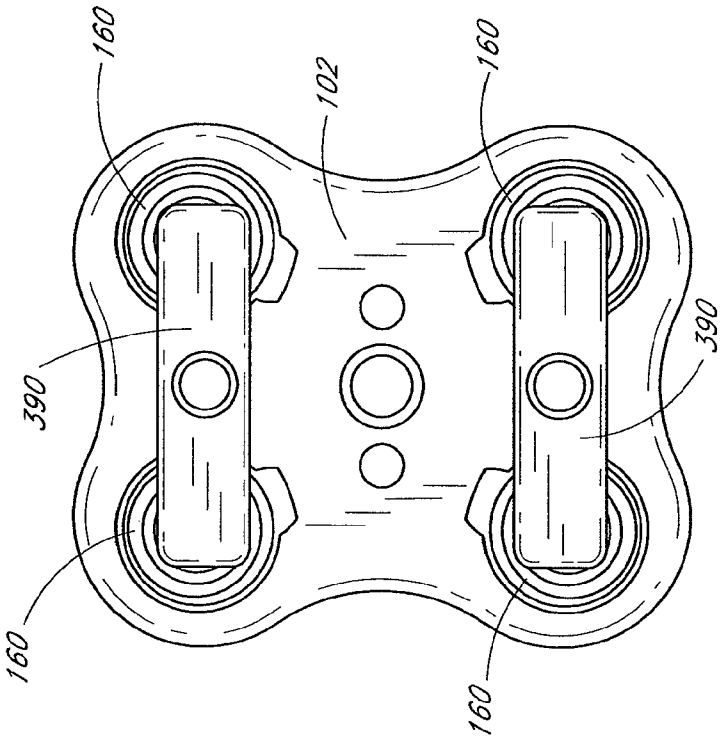

FIG. 35B

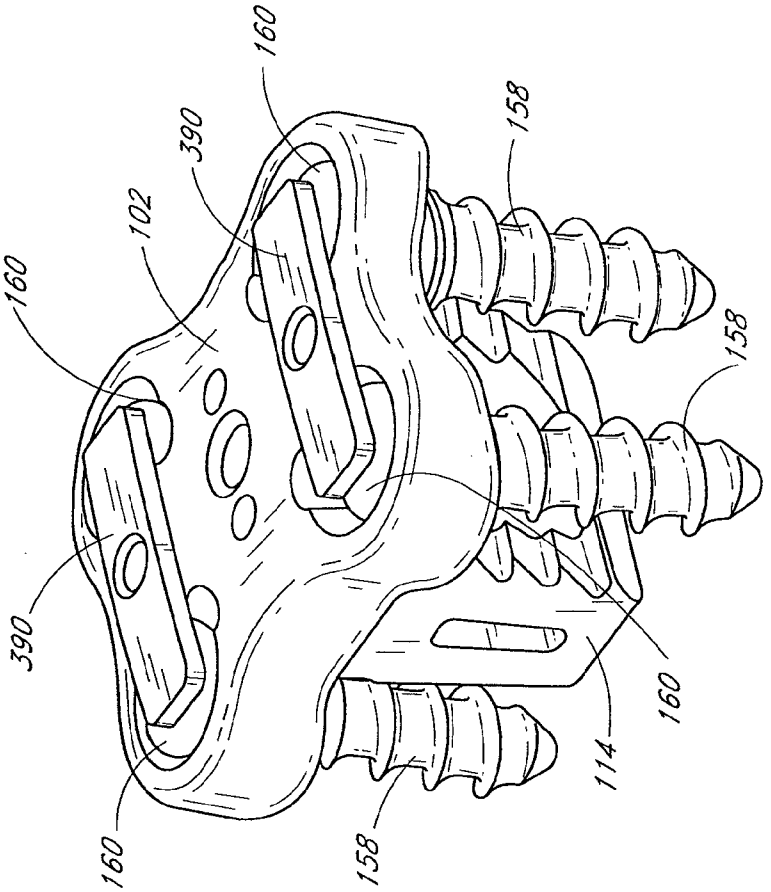

FIG. 35A

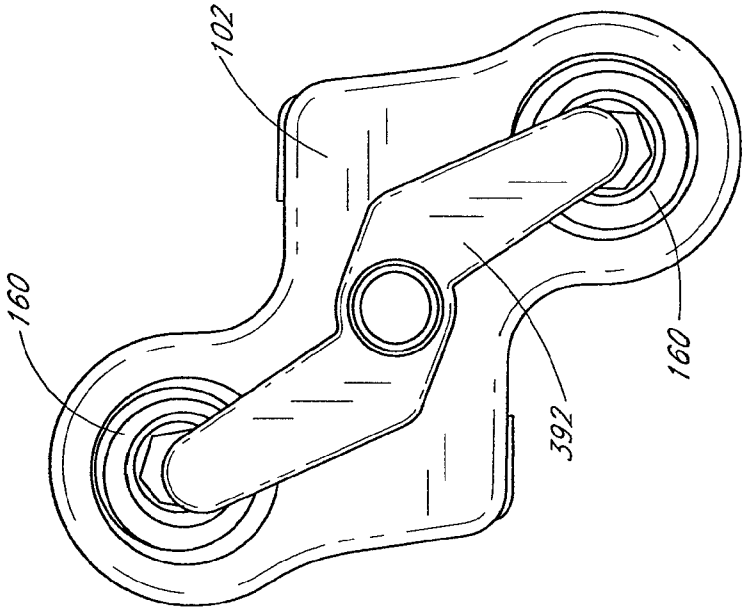

FIG. 36B

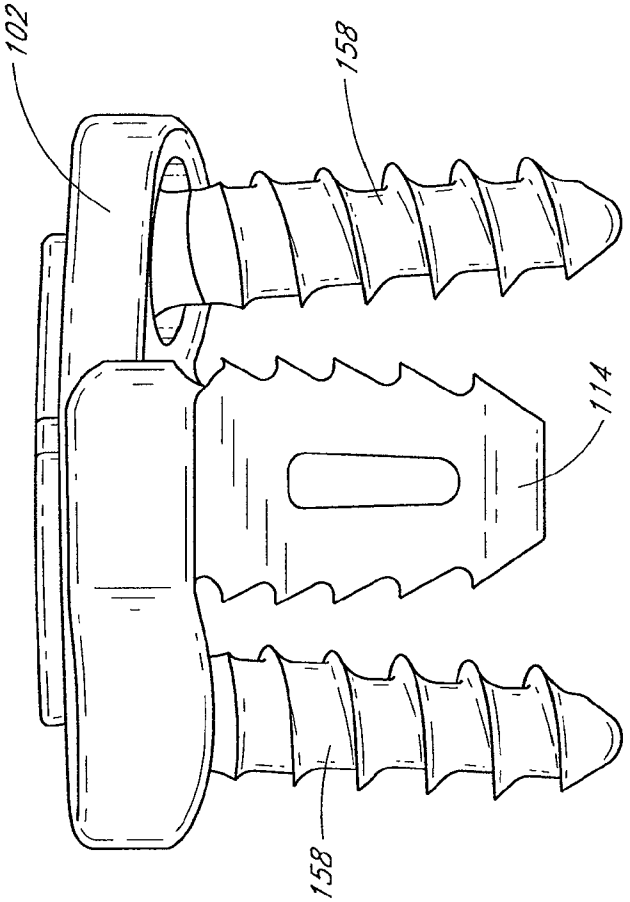

FIG. 36A

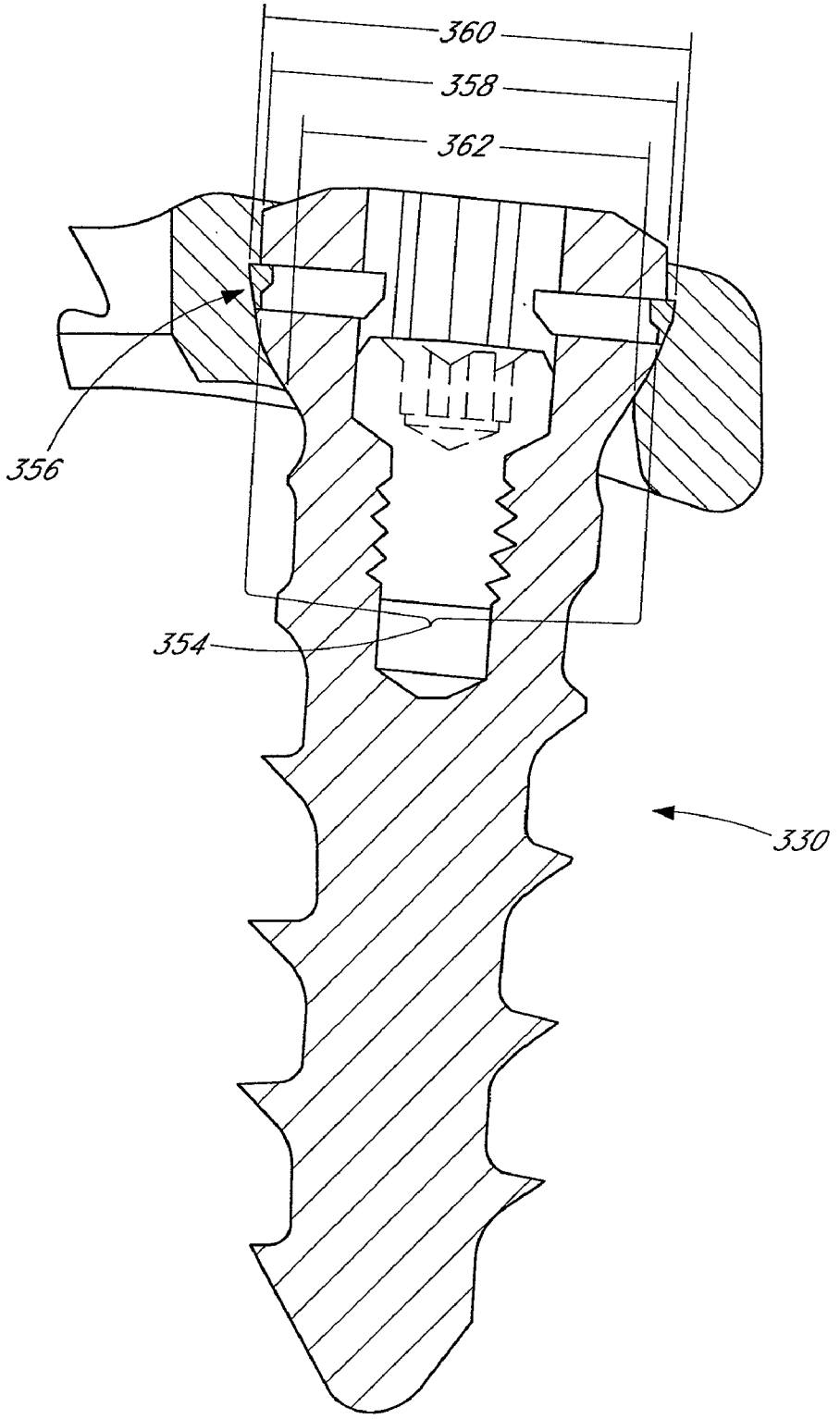

FIG. 37

ORTHOPEDIC EXPANSION FASTENER

CROSS-REFERENCE TO RELATED APPLICATIONS

The present application claims priority under 35 U.S.C. §119(e) to U.S. Provisional Application No. 60/662,747 filed on Mar. 17, 2005 and U.S. Provisional Application No. 60/708,918 filed on Aug. 17, 2005, the disclosures of which are incorporated by reference herein in their entirety.

BACKGROUND OF THE INVENTION

1. Field of the Invention

This invention relates generally to systems and methods for performing spinal fixation. The invention comprises one or more vertebral spacers that feature an attachment system that resists backing out of the screws used to attach the spacers to the vertebrae. The invention may be configured so that multiple adjacent spacers may be used along the vertebral column.

2. Description of the Related Art

Advancing age, as well as injury, can lead to degenerative changes in the bones, discs, joints and ligaments of the spine, producing pain and instability. Under certain circumstances, alleviation of the problems can be provided by performing spinal fusion. Spinal fusion is a surgical technique where two or more vertebrae of the spinal column are fused together to eliminate the motion between the fused vertebrae. Spinal fusion is used to treat conditions where the spine exhibits instability. Spine instability may result from causes such as fracture, scoliosis and spondylolisthesis, where one or more vertebrae move in a forward direction relative to the other vertebrae. Spinal fusion with discectomy is also performed for herniations of the discs. This surgery involves removal of the affected disc and fusion of the adjacent vertebrae. Traditionally, bone grafts have been used to fuse the vertebrae, but various types of vertebral implants have also been used.

The use of bone plate and bone screw fixation systems for treating injuries to bones is well established. In most instances, a bone plate is positioned over and surrounding the bone injury area and secured to the bone. The bone plate is secured to the bone by bone screws or other similar fasteners inserted through holes in the bone plate and into the bone itself. The screws are tightened so that the bone plate holds the bone to be treated in place in order to insure proper healing. Early fixation devices tended to be applicable only to long bone injuries with only limited uses for lower lumbar spinal injuries and disorders. The use of plate/screw fixation systems later expanded, however, to include more uses for spinal injuries, including fusion of vertebrae including fixation devices for treating cervical vertebrae injuries.

Notwithstanding the foregoing, there remains a need for improved methods and devices for treating spinal instability.

SUMMARY OF THE INVENTION

Methods and devices are disclosed for treating the vertebral column. An integrated fixation plate and spacer having a retaining structure within the screw holes of the fixation plate to resist backout of screws attaching the fixation plate to the bone is provided. In some embodiments, a screw hole insert is also provided to resist shear forces acting between the screw and fixation plate. In some embodiments, an integrated fixation plate and spacer system is provided, comprising two or more integrated fixation plate and spacer implants, wherein the fixation plates of each implant has a complementary configuration to allow attachment of the implants at adjacent intervertebral spaces. Alternative fixation systems are also contemplated.

In one embodiment of the invention, an intervertebral stabilization system is provided, comprising a first stabilization plate integrated with a first spacer, wherein the first stabilization plate has an upper portion and a lower portion and a second stabilization plate integrated with a second spacer, wherein the second stabilization plate has an upper portion and a lower portion, wherein the lower portion of the first stabilization plate has a configuration complementary to the configuration of the upper portion of the second stabilization plate. In some embodiments, the configuration of the lower portion of the second stabilization plate is complementary to the configuration of the upper portion of the second stabilization plate. In some embodiments, the lower portion of the second stabilization plate has a relative shape equal to the relative shape of the upper portion of the second stabilization plate rotated 180 degrees. In one embodiment, the upper portion of the first stabilization plate may comprise two attachment holes and the lower portion of the first stabilization plate may comprise one attachment hole. The intervertebral stabilization system may further comprise a third stabilization plate and a third spacer, wherein the configuration of the upper portion of the third stabilization plate is complementary to the configuration of the lower portion of the second stabilization plate. The third stabilization plate may be integrated with the third spacer. The lower portion of the third stabilization plate may have a configuration complementary to the configuration of the upper portion of the third stabilization plate. The lower portion of the third stabilization plate may have a relative shape equal to the relative shape of the upper portion of the third stabilization plate rotated 180 degrees. In another embodiment, the intervertebral stabilization system may also further comprise a fourth stabilization plate and a fourth spacer, wherein the upper portion of the fourth stabilization plate has a configuration complementary to configuration of the lower portion of the third stabilization plate. In this embodiment, the second stabilization plate and third stabilization plate may have the same configuration. The lower portion of the second stabilization plate may have a relative shape equal to the relative shape of the upper portion of the second stabilization plate rotated 180 degrees. In one embodiment, the lower portion of the first stabilization plate has a right-sided complementary shape and the upper portion of the second stabilization plate has a left-sided complementary shape. In another embodiment, the lower portion of the first stabilization plate has a left-sided complementary shape and the upper portion of the second stabilization plate has a right-sided complementary shape. The lower portion of the second stabilization plate may have a right-sided complementary shape. The lower portion of the second stabilization plate may have a left-sided complementary shape. The lower portion of the first stabilization plate may have an inside complementary shape and the upper portion of the second stabilization plate has an outside complementary shape. The lower portion of the first stabilization plate may have an underside complementary shape and the upper portion of the second stabilization plate has a topside complementary shape.

In another embodiment of the invention, an implant for treating the spine is provided, comprising a stabilization plate having an access surface and a bone facing surface, an upper portion and a lower portion, a spacer integrated with the stabilization plate at the bone facing surface, a first attachment lumen between the access surface and the bone facing surface of the stabilization plate, the lumen having a first

attachment diameter adjacent to the access surface of the stabilization plate, a lumen surface and a second attachment diameter adjacent to the bone facing surface of the stabilization plate, a retaining channel along the lumen surface, and a third attachment diameter about the retaining channel, wherein the first attachment diameter is greater than the second attachment diameter, a deformable retaining ring at least partially located within the retaining channel, and a first attachment lumen insert having an inner insert diameter and an outer insert diameter. The at least a portion of the spacer may comprise tissue engagement structures. The tissue engagement structures may comprise teeth. The implant may further comprise a bone screw, the bone screw having a screw head and a screw body, wherein the screw head has a head diameter less than the first attachment diameter and greater than the second attachment diameter, or a head diameter less than the first attachment diameter and greater than the inner insert diameter. The implant may further comprise a second attachment lumen between the access surface and the bone facing surface of the stabilization plate, the lumen having a fourth attachment diameter adjacent to the access surface of the stabilization plate, a lumen surface and a fifth attachment diameter adjacent to the bone facing surface of the stabilization plate.

In another embodiment, a method for treating a spine is provided, comprising the steps of providing a first stabilization plate integrated with a first spacer, wherein the first stabilization plate comprises an upper portion, a lower portion and a plurality of attachment holes, at least one attachment hole comprising a retaining structure and an attachment insert, inserting the spacer component into a vertebral space between a first vertebra and a second vertebra, attaching the upper portion of the first stabilization plate to the first vertebra, and attaching the lower portion of the first stabilization plate to the second vertebra.

In one embodiment of the invention, a method for treating a spine is provided comprising the steps of providing an integrated stabilization plate and spacer system, comprising a first integrated stabilization plate and first spacer and a second integrated stabilization plate and a second spacer, each stabilization plate having an upper portion and a lower portion and wherein the lower portion of the first integrated stabilization plate has a complementary shape to the upper portion of the second integrated stabilization plate, inserting the first spacer into a first intervertebral space between a first vertebra and a second vertebra, attaching the upper portion of the first integrated stabilization plate to the first vertebra, attaching the lower portion of the first integrated stabilization plate to the second vertebra, inserting the second spacer into a second intervertebral space between the second vertebra and a third vertebra, wherein the second intervertebral space is next to the first intervertebral space along a vertebral column, attaching the upper portion of the second integrated stabilization plate to the second vertebra; and attaching the lower portion of the second integrated stabilization plate to the third vertebra. In some instances, the integrated stabilization plate and spacer system of the providing step may further comprise a third integrated stabilization plate and a second spacer, wherein the lower portion of the second integrated stabilization plate has a complementary shape to the upper portion of the third integrated stabilization plate. The method for treating a spine may further comprise the steps of inserting the third spacer into a third intervertebral space between the third vertebra and a fourth vertebra, wherein the third intervertebral space is next to the second intervertebral space along the vertebral column, attaching the upper portion of the third integrated stabilization plate to the third vertebra, and attaching the lower portion of the third integrated stabilization plate to the fourth vertebra.

In one embodiment of the invention, an orthopedic implant assembly is provided, comprising a stabilizing element having a trailing surface, a leading surface and at least one lumen, the lumen having a first opening at the trailing surface, a second opening at the leading surface that is smaller than the first opening, and a passageway extending from the first opening to the second opening, a securing element having an elongated body, a head at one end of the body and integral therewith, and a lumen insert member defining a portion of the passageway, having an inner diameter and an outer diameter, and adapted to substantially reduce any force exerted between the stabilizing element and the securing element, wherein the diameter of the head of the securing element is greater than the lesser diameter between the second opening of the lumen and the inner diameter of the insert. The orthopedic implant may further comprise an interbody element integral with the leading surface of the stabilizing element and/or a locking assembly for resisting movement of securing element in at least one direction.

In another embodiment, an implant for treating the spine is provided, comprising: a fixation plate having an access surface and a bone facing surface, an upper portion and a lower portion; a spacer; and a moveable connection between the spacer and the bone facing surface of the fixation plate. The moveable connection may be a hinge joint, a ball and socket joint, or a metal cord attached between the spacer and the bone facing surface of the fixation plate.

In one embodiment, an implant for treating the spine is provided, comprising: a fixation plate having an access surface and a bone facing surface, an upper portion and a lower portion; a spacer connected to the bone facing surface of the fixation plate; and one or more locking plates with an alignment structure to non-frictionally resist rotation of the locking plate when partially attached to the fixation plate by a fastener.

In another embodiment, an implant for treating the spine is provided, comprising: a fixation plate having an access surface and a bone facing surface, an upper portion and a lower portion; a spacer connected to the fixation plate at the bone facing surface; a first attachment lumen between the access surface and the bone facing surface of the stabilization plate, the lumen having a first attachment diameter adjacent to the access surface of the stabilization plate, a lumen surface and a second attachment diameter adjacent to the bone facing surface of the stabilization plate, a retaining channel along the lumen surface, and a third attachment diameter about the retaining channel, wherein the first attachment diameter is greater than the second attachment diameter; and a deformable retaining ring having a retaining segment and a polyaxial segment and an abutting surface therebetween, wherein the retaining segment of the deformable retaining ring is at least partially located within the retaining channel.

In one embodiment, a system for attaching to a structure is provided, comprising: an attachment device having an access surface, an facing surface, a first attachment lumen between the access surface and the facing surface of the attachment device, the first attachment lumen having a first attachment diameter adjacent to the access surface of the attachment device, a first lumen surface and a second attachment diameter adjacent to the facing surface of the attachment device, a first retaining channel along the first lumen surface, and a third attachment diameter about the first retaining channel, wherein the first attachment diameter is greater than the second attachment diameter; and a side-biased blocking struc-

ture at least partially within the retaining channel having an uncompressed configuration that protrudes into the first attachment lumen and a compressed configuration that does not protrude into the first attachment lumen. The blocking structure may comprise a sloped surface.

In another embodiment of the invention, a fastener is provided, comprising: a fastener head and fastener shaft, the fastener head comprising a screw lumen, an external groove and one or more openings between the screw lumen and external groove, and an expandable member located at least partially in the external groove and protruding through the one or more openings into the screw lumen. The expandable member may be a ring. The fastener may further comprise a secondary screw configured for the screw lumen.

In one embodiment, an intervertebral stabilization system is provided, comprising a first stabilization plate integrated with a first spacer, wherein the first stabilization plate comprises an upper portion and a lower portion, and a second stabilization plate integrated with a second spacer, wherein the second stabilization plate comprises an upper portion and a lower portion, wherein the lower portion of the first stabilization plate has a configuration complementary to the configuration of the upper portion of the second stabilization plate. The configuration of the lower portion of the second stabilization plate may be complementary to the configuration of the upper portion of the second stabilization plate. The lower portion of the second stabilization plate may have a relative shape equal to the relative shape of the upper portion of the second stabilization plate rotated 180 degrees. The upper portion of the first stabilization plate may comprise two attachment holes. The lower portion of the first stabilization plate may comprise one attachment hole. The intervertebral stabilization system may further comprise a third stabilization plate and a third spacer, wherein the configuration of the upper portion of the third stabilization plate may be complementary to the configuration of the lower portion of the second stabilization plate. The third stabilization plate may be integrated with the third spacer. The lower portion of the third stabilization plate may have a configuration complementary to the configuration of the upper portion of the third stabilization plate. The lower portion of the third stabilization plate may have a relative shape equal to the relative shape of the upper portion of the third stabilization plate rotated 180 degrees. The intervertebral stabilization system may further comprise a fourth stabilization plate and a fourth spacer, wherein the upper portion of the fourth stabilization plate has a configuration complementary to configuration of the lower portion of the third stabilization plate. The second stabilization plate and third stabilization plate may have the same configuration. The lower portion of the second stabilization plate may have a relative shape equal to the relative shape of the upper portion of the second stabilization plate rotated 180 degrees. The lower portion of the first stabilization plate may have a right-sided complementary shape and the upper portion of the second stabilization plate may have a left-sided complementary shape. The lower portion of the first stabilization plate may have a left-sided complementary shape and the upper portion of the second stabilization plate may have a right-sided complementary shape. The lower portion of the second stabilization plate may have a right-sided complementary shape. The lower portion of the second stabilization plate may have a left-sided complementary shape. The lower portion of the first stabilization plate may have an inside complementary shape and the upper portion of the second stabilization plate may have an outside complementary shape. The lower portion of the first stabilization plate may have an underside complementary shape and the upper portion of the second stabilization plate may have a topside complementary shape.

In another embodiment, an orthopedic implant assembly is provided, comprising a stabilizing element having a trailing surface, a leading surface and at least one lumen, the lumen having a first opening at the trailing surface, a second opening at the leading surface that may be smaller than the first opening, and a passageway extending from the first opening to the second opening, a securing element having an elongated body, a head at one end of the body and integral therewith, and a lumen insert member within a portion of the passageway, the lumen insert member comprising an inner diameter and an outer diameter, and adapted to substantially reduce any force exerted between the stabilizing element and the securing element, wherein the diameter of the head of the securing element may be greater than the lesser diameter between the second opening of the lumen and the inner diameter of the insert. The orthopedic implant assembly may further comprise an interbody element integral with the leading surface of the stabilizing element. The orthopedic implant assembly may further comprise a locking assembly for resisting movement of securing element in at least one direction.

In one embodiment, a method for treating a spine is provided, comprising providing an integrated stabilization plate and spacer system, comprising a first integrated stabilization plate and first spacer and a second integrated stabilization plate and a second spacer, wherein each stabilization plate having an upper portion and a lower portion and wherein the lower portion of the first integrated stabilization plate may have a complementary shape to the upper portion of the second integrated stabilization plate, inserting the first spacer into a first intervertebral space between a first vertebra and a second vertebra, attaching the upper portion of the first integrated stabilization plate to the first vertebra, attaching the lower portion of the first integrated stabilization plate to the second vertebra, inserting the second spacer into a second intervertebral space between the second vertebra and a third vertebra, wherein the second intervertebral space may be next to the first intervertebral space along a vertebral column, attaching the upper portion of the second integrated stabilization plate to the second vertebra, and attaching the lower portion of the second integrated stabilization plate to the third vertebra. The integrated stabilization plate and spacer system wherein providing the integrated stabilization plate and spacer system may further comprise a third integrated stabilization plate and a second spacer, wherein the lower portion of the second integrated stabilization plate may have a complementary shape to the upper portion of the third integrated stabilization plate. The method for treating a spine may further comprise inserting the third spacer into a third intervertebral space between the third vertebra and a fourth vertebra, wherein the third intervertebral space may be next to the second intervertebral space along the vertebral column, attaching the upper portion of the third integrated stabilization plate to the third vertebra, and attaching the lower portion of the third integrated stabilization plate to the fourth vertebra.

In one embodiment, an implant for treating the spine is provided, comprising, a stabilization plate comprising an access surface and a bone facing surface, an upper portion and a lower portion, a spacer integral with the stabilization plate at the bone facing surface, a first attachment lumen between the access surface and the bone facing surface of the stabilization plate, the first attachment lumen having a first attachment diameter adjacent to the access surface of the stabilization plate, a lumen surface and a second attachment diameter

adjacent to the bone facing surface of the stabilization plate, a retaining channel along the lumen surface, and a third attachment diameter about the retaining channel, wherein the first attachment diameter may be greater than the second attachment diameter, a deformable retaining ring at least partially located within the retaining channel, and a first attachment lumen insert located at least partially in the first attachment lumen and having an inner insert diameter and an outer insert diameter. At least a portion of the spacer may comprise tissue engagement structures. The tissue engagement structures may comprise teeth. The implant may further comprise a bone screw, the bone screw having a screw head and a screw body, wherein the screw head may have a head diameter less than the first attachment diameter and greater than the second attachment diameter. The implant may further comprise a bone screw, the bone screw having a screw head and a screw body, wherein the screw head may have a head diameter less than the first attachment diameter and greater than the inner insert diameter. The outer insert diameter may be greater than the second attachment diameter and the inner insert diameter may be smaller than the second attachment diameter. The second attachment diameter and the third attachment diameter are generally equal. The first attachment lumen insert may be located within the first attachment lumen. The first attachment lumen insert may comprise an inner concave surface. The screw head of the bone screw may comprise an outer convex surface. The outer convex surface of the screw head may be complementary to the inner concave surface of the first attachment lumen insert. The implant may further comprise a second attachment lumen between the access surface and the bone facing surface of the stabilization plate, the second attachment lumen having a fourth attachment diameter adjacent to the access surface of the stabilization plate, a lumen surface and a fifth attachment diameter adjacent to the bone facing surface of the stabilization plate.

In another embodiment, a method for treating a spine is provided, comprising providing a first stabilization plate integral with a first spacer, wherein the first stabilization plate comprises an upper portion, a lower portion and a plurality of attachment holes, wherein at least one attachment hole comprising a retaining structure and an attachment insert, inserting the first spacer into a vertebral space between a first vertebra and a second vertebra, attaching the upper portion of the first stabilization plate to the first vertebra, and attaching the lower portion of the first stabilization plate to the second vertebra. The at least one attachment hole may further comprise a retaining groove and the retaining structure may be a retaining ring positioned in the retaining groove. The attachment insert may comprise a concave surface. The retaining ring may be integral with the attachment insert. Attaching the upper portion of the first stabilization plate to the first vertebra may comprise inserting a bone fastener through one of the plurality of attachment holes located in the upper portion of the first stabilization plate and engaging the first vertebra with the bone fastener. The method may further comprise providing a second stabilization plate integral with a second spacer, wherein the second stabilization plate may comprise an upper portion and a lower portion. The lower portion of the first stabilization plate may have a complementary configuration to the upper portion of the second stabilization plate. The method may further comprise inserting the second spacer into a vertebral space between the second vertebra and a third vertebra.

In one embodiment, an implant for treating the spine is provided, comprising a fixation plate comprising an access surface and a bone facing surface, an upper portion and a lower portion, a spacer connected to the fixation plate at the bone facing surface, a first attachment lumen between the access surface and the bone facing surface of the stabilization plate, the lumen having a first attachment diameter adjacent to the access surface of the stabilization plate, a lumen surface and a second attachment diameter adjacent to the bone facing surface of the stabilization plate, a retaining channel along the lumen surface, and a third attachment diameter about the retaining channel, wherein the first attachment diameter may be greater than the second attachment diameter, a deformable retaining ring having a retaining segment and a polyaxial segment and an abutting surface therebetween, wherein the retaining segment of the deformable retaining ring may be at least partially located within the retaining channel.

In another embodiment, an implant for treating the spine is provided, comprising a fixation plate having an access surface and a bone facing surface, an upper portion and a lower portion, a spacer, and a non-detachable articulation between the spacer and the bone facing surface of the fixation plate. The non-detachable articulation may be a hinge joint. The hinge joint may have a joint axis that does not intersect the fixation plate. The hinge joint may have a joint axis configured to be generally perpendicular to a longitudinal axis of a vertebral column when implanted. The hinge joint may have a joint axis configured to be generally parallel to a longitudinal axis of a vertebral column when implanted. The non-detachable articulation may be a ball and socket joint. The non-detachable articulation may comprise a metal cord attached between the spacer and the bone facing surface of the fixation plate. The non-detachable articulation may be a pivoting articulation.

In one embodiment, an implant for treating the spine is provided, comprising a fixation plate having an access surface and a bone facing surface, an upper portion and a lower portion, a spacer, and a pivoting articulation between the spacer and the bone facing surface of the fixation plate. The pivoting articulation may be a hinge joint. The hinge joint may have a joint axis configured to be generally perpendicular to a longitudinal axis of a vertebral column when implanted. The hinge joint may have a joint axis configured to be generally parallel to a longitudinal axis of a vertebral column when implanted. The pivoting articulation may be a ball and socket joint. The pivoting articulation may comprise a metal cord attached between the spacer and the bone facing surface of the fixation plate. The pivoting articulation may be a detachable articulation.

In another embodiment, an implant for treating the spine is provided, comprising a fixation plate having an access surface and a bone facing surface, an upper portion and a lower portion, a spacer, and a rotatable articulation between the spacer and the fixation plate and comprising an axis of rotation, wherein the axis of rotation of the rotatable articulation does not intersect the fixation plate. The axis of rotation of the rotatable articulation may be generally parallel to the fixation plate. The rotatable articulation may be configured to allow reversible separation of the fixation plate and spacer.

In another embodiment, an implant for treating the spine is provided, comprising a fixation plate comprising an access surface and a bone facing surface, an upper portion, a lower portion, and at least one attachment lumen between the access surface and the bone facing surface, a spacer connected to the bone facing surface of the fixation plate, and a locking plate configured to overlie the at least one attachment lumen and comprising an alignment structure to non-frictionally resist rotation of the locking plate when the locking plate is partially attached to the fixation plate by a fastener. The implant may further comprise two attachment lumens and the locking plate may overlie at least one of the two attachment lumens. The

locking plate may overlie both of the two attachment lumens. The fixation plate may further comprise a third attachment lumen. The locking plate may overlie the two attachment lumens and the third attachment lumen. The fixation plate may further comprise a fourth attachment lumen. The locking plate may overlie the two attachment lumens, the third attachment lumen and the fourth attachment lumen. At least a portion of the spacer may comprise tissue engagement structures. The tissue engagement structures may comprise teeth. The spacer may be integral with the bone facing surface of the fixation plate or may be connected to the bone facing surface of the fixation plate by an articulation joint. The articulation joint may be separable or non-separable. The lower portion of the fixation plate may have a configuration complementary to the configuration of the upper portion of the fixation plate. The alignment structure may comprise an elongate member and wherein the fixation plate may further comprise an alignment lumen configured to accept the elongate member. The elongate member and the alignment lumen may be configured to resist rotation of the elongate member when in the alignment lumen. The locking plate may have an X-shaped configuration or an H-shaped configuration. The locking plate may further comprise a second alignment structure and wherein the fixation plate may further comprise a second alignment lumen configured for accepting the second alignment structure. The locking plate may overlie one of the two attachment lumens and the implant may further comprise a second locking plate overlying the other of the two attachment lumens.

In another embodiment, an implant for treating the spine is provided, comprising a flanged intervertebral spacer comprising a spacer body and a flange section, the flange section comprising an access surface and a bone facing surface, an upper portion, a lower portion, four attachment lumens between the access surface and the bone facing surface and two alignment lumens, a locking plate comprising four attachment cover sections and two alignment pins, wherein the four attachment cover sections are configured to cover the four attachment lumens of the flange section and the two alignment pins are configured for insertion into the two alignment lumens of the flange section.

In one embodiment, a system for attaching to a structure is provided, comprising an attachment device having an access surface, a facing surface, a first attachment lumen between the access surface and the facing surface of the attachment device, the first attachment lumen having a first attachment diameter adjacent to the access surface of the attachment device, a first lumen surface and a second attachment diameter adjacent to the facing surface of the attachment device, a first retaining channel along the first lumen surface, and a third attachment diameter about the first retaining channel, wherein the first attachment diameter may be greater than the second attachment diameter, and a side-biased blocking structure at least partially within the retaining channel and comprising an uncompressed configuration that protrudes into the first attachment lumen and a compressed configuration that does not protrude into the first attachment lumen. The blocking structure may comprise a slope surface. The blocking structure may be an arcuate structure. The arcuate structure may be a ring structure. The blocking structure may be a rectangular plate with a through lumen. The through lumen may be a circular through lumen. The attachment structure may be an interbody spacer, a flanged interbody spacer, a fixation plate a vertebral fixation plate, or an anterior cervical fixation plate. The blocking structure may comprise a helical spring member, a leaf spring member, or an elongate bias member. The blocking structure may comprise a second elongate bias member. The elongate bias member may have an arcuate shape.

In one embodiment, a method for treating the spine is provided, comprising providing an orthopedic device comprising a fastener lumen, a securing structure space about the fastener lumen, a securing structure in the fastener lumen and the securing structure space, wherein the securing structure may comprise a bias element and a non-deformable blocking element, inserting a fastener into the fastener lumen, displacing at least a portion of the non-deformable blocking element from the fastener lumen into the securing structure space by compressing the bias element, and passing the head of the fastener past the non-deformable blocking element to allow re-expansion of the bias element.

In another embodiment, a method for treating the spine is provided, comprising providing an orthopedic device comprising a fastener lumen with a longitudinal lumen axis, a securing structure space about the fastener lumen, a securing structure in the fastener lumen and the securing structure space, wherein the securing structure may comprise a biased lumen blocker, inserting a fastener into the fastener lumen, eccentrically displacing the biased lumen blocker with respect to the longitudinal axis of the fastener lumen, and passing the fastener past biased lumen blocker to allow reversion of the biased lumen blocker toward a prior position. The method may further comprise reverting the biased lumen blocker toward a prior position or to a prior position.

In one embodiment, a fastener is provided, comprising a fastener head and fastener shaft, the fastener head comprising a screw lumen, an external groove and one or more openings between the screw lumen and external groove, and an expandable member located at least partially in the external groove and protruding through the one or more openings into the screw lumen. The expandable member may be a ring. The fastener may further comprise a secondary screw configured for the screw lumen.

In one embodiment, an orthopedic fastening system is provided, comprising a fastener comprising a fastener head and a threaded fastener body, wherein the fastener head may comprise a lumen opening, a central internal lumen contiguous with the lumen opening, a side lumen contiguous with the central internal lumen and an expansion member located at least partially within the side lumen and having an expanded configuration and a reduced configuration. The fastener head may further comprise an internal screw and located in the central internal lumen, the internal screw having a proximal position and a distal position. The internal screw in the proximal position may be located about the side lumen and in the distal position may be located distal to the side lumen. The proximal position of the internal screw may displace the expansion member into the expanded configuration. The orthopedic proximal position of the internal screw at least partially displaces the expansion member out of the side lumen. The proximal position of the internal screw allows the expansion member to be in the reduced configuration. The expansion member in the reduced configuration may be partially located in the central internal lumen. The proximal position of the internal screw at least partially displaces the expansion member out of the central internal lumen. The expansion member biased to the reduced configuration. The fastener head may further comprise an expansion groove contiguous with the side lumen and the expansion member may comprise an elongate body positioned about the expansion groove. The elongate body may be an arcuate elongate body. The expansion member may further comprise a radial elongate body located at least partially in the side lumen. The

orthopedic fastening system may further comprise an orthopedic device comprising a fastener lumen adapted to retain the fastener. The fastener lumen may comprise a proximal diameter, a middle diameter and a distal diameter, wherein the proximal diameter is smaller than the middle diameter. The distal diameter of the fastener lumen may be smaller than the proximal diameter of the fastener lumen. The fastener lumen may comprises a hole insert. The hole insert may comprise a proximal diameter, a middle diameter and a distal diameter, wherein the proximal diameter is smaller than the middle diameter. The orthopedic device may be an interbody spacer, a flanged interbody spacer, a fixation plate, a vertebral fixation plate, or an anterior cervical fixation plate.

In another embodiment, a method for securing an orthopedic device to a bone is provided, comprising providing an orthopedic device comprising a fastener lumen and a fastener, the fastener comprising a fastener head and a fastener body, the fastener head comprising a lumen opening, a central internal lumen contiguous with the lumen opening, an internal screw located within the central internal lumen, a side lumen contiguous with the central internal lumen and an expansion member located at least partially within the side lumen and the central internal lumen and having an expanded configuration and a reduced configuration, attaching the orthopedic device to a bone in a body, moving the internal screw to a position about the side lumen, partially displacing the expansion member with respect to the side lumen, and changing the expansion member to its expanded configuration. The fastener lumen may comprise a middle diameter and a proximal diameter, where the proximal diameter may be less than the middle diameter. The reduced configuration of the expansion member may have a diameter less than the proximal diameter and the expanded configuration of the expansion member may have a diameter between the proximal diameter and the middle diameter. Attaching the orthopedic device to a bone in a body may comprise inserting the fastener into the fastener lumen, and inserting the fastener into the bone of the body. The orthopedic device may be an interbody spacer. The interbody spacer may be a flanged interbody spacer, a fixation plate, a vertebral fixation plate, or an anterior cervical fixation plate.

In another embodiment, a method for securing a device to an object is provided, comprising providing a device comprising a fastener lumen and a fastener, the fastener comprising a fastener head and a fastener body, the fastener head comprising a lumen opening, a central internal lumen contiguous with the lumen opening, an internal screw located within the central internal lumen, a side lumen contiguous with the central internal lumen and an expansion member located at least partially within the side lumen and the central internal lumen and having an expanded configuration and a reduced configuration, attaching the device to an object, moving the internal screw to a position about the side lumen, partially displacing the expansion member with respect to the side lumen, and changing the expansion member to its expanded configuration. The fastener lumen may comprise a middle diameter and a proximal diameter, where the proximal diameter may be less than the middle diameter. The reduced configuration of the expansion member may have a diameter less than the proximal diameter and the expanded configuration of the expansion member may have a diameter between the proximal diameter and the middle diameter. Attaching the device to the object may comprise inserting the fastener into the fastener lumen, and inserting the fastener into the object.

In one embodiment, an intervertebral stabilization system is provided, comprising a first stabilization plate integrated with a first spacer, wherein the first stabilization plate may comprise an upper portion and a lower portion, and a second stabilization plate integrated with a second spacer, wherein the second stabilization plate may comprise an upper portion and a lower portion, wherein the lower portion of the first stabilization plate may have a configuration complementary to the configuration of the upper portion of the second stabilization plate. The configuration of the lower portion of the second stabilization plate may be complementary to the configuration of the upper portion of the second stabilization plate, or may have a relative shape equal to the relative shape of the upper portion of the second stabilization plate rotated 180 degrees. The upper portion of the first stabilization plate may comprise two attachment holes. The lower portion of the first stabilization plate may comprise one attachment hole. The intervertebral stabilization system may further comprise a third stabilization plate and a third spacer, wherein the configuration of the upper portion of the third stabilization plate may be complementary to the configuration of the lower portion of the second stabilization plate. The third stabilization plate may be integrated with the third spacer. The lower portion of the third stabilization plate may have a configuration complementary to the configuration of the upper portion of the third stabilization plate, or may have a relative shape equal to the relative shape of the upper portion of the third stabilization plate rotated 180 degrees. The intervertebral stabilization system may further comprise a fourth stabilization plate and a fourth spacer, wherein the upper portion of the fourth stabilization plate may have a configuration complementary to configuration of the lower portion of the third stabilization plate. The second stabilization plate and third stabilization plate have the same configuration. The lower portion of the second stabilization plate may have a relative shape equal to the relative shape of the upper portion of the second stabilization plate rotated 180 degrees. The the lower portion of the first stabilization plate may have a right-sided complementary shape and the upper portion of the second stabilization plate may have a left-sided complementary shape. The lower portion of the first stabilization plate may have a left-sided complementary shape and the upper portion of the second stabilization plate may have a right-sided complementary shape. The lower portion of the second stabilization plate may have a right-sided complementary shape. The lower portion of the second stabilization plate may have a left-sided complementary shape. The lower portion of the first stabilization plate may have an inside complementary shape and the upper portion of the second stabilization plate may have an outside complementary shape. The lower portion of the first stabilization plate may have an underside complementary shape and the upper portion of the second stabilization plate may have a topside complementary shape.

In another embodiment, an orthopedic implant assembly is provided, comprising a stabilizing element having a trailing surface, a leading surface and at least one lumen, the lumen having a first opening at the trailing surface, a second opening at the leading surface that may be smaller than the first opening, and a passageway extending from the first opening to the second opening, a securing element having an elongated body, a head at one end of the body and integral therewith, and a lumen insert member within a portion of the passageway, the lumen insert member having an inner diameter and an outer diameter, and adapted to substantially reduce any force exerted between the stabilizing element and the securing element, wherein the diameter of the head of the securing element may be greater than the lesser diameter between the second opening of the lumen and the inner diameter of the insert. The orthopedic implant assembly may further comprise an interbody element integral with the leading surface of

the stabilizing element. The orthopedic implant assembly may further comprise a locking assembly for resisting movement of securing element in at least one direction.

In another embodiment, a method for treating a spine is provided, comprising providing an integrated stabilization plate and spacer system, the integrated stabilization plate and spacer system comprising a first integrated stabilization plate and first spacer and a second integrated stabilization plate and a second spacer, wherein each stabilization plate has an upper portion and a lower portion and wherein the lower portion of the first integrated stabilization plate has a complementary shape to the upper portion of the second integrated stabilization plate, inserting the first spacer into a first intervertebral space between a first vertebra and a second vertebra, attaching the upper portion of the first integrated stabilization plate to the first vertebra, attaching the lower portion of the first integrated stabilization plate to the second vertebra, inserting the second spacer into a second intervertebral space between the second vertebra and a third vertebra, wherein the second intervertebral space is next to the first intervertebral space along a vertebral column, attaching the upper portion of the second integrated stabilization plate to the second vertebra, and attaching the lower portion of the second integrated stabilization plate to the third vertebra. Providing the integrated stabilization plate and spacer system further may comprise a third integrated stabilization plate and a second spacer, wherein the lower portion of the second integrated stabilization plate may have a complementary shape to the upper portion of the third integrated stabilization plate. The method for treating a spine may further comprise the steps of inserting the third spacer into a third intervertebral space between the third vertebra and a fourth vertebra, wherein the third intervertebral space is next to the second intervertebral space along the vertebral column, attaching the upper portion of the third integrated stabilization plate to the third vertebra, and attaching the lower portion of the third integrated stabilization plate to the fourth vertebra.

In another embodiment, an implant for treating the spine is provided, comprising a stabilization plate comprising an access surface and a bone facing surface, an upper portion and a lower portion, a spacer integral with the stabilization plate at the bone facing surface, a first attachment lumen between the access surface and the bone facing surface of the stabilization plate, the first attachment lumen having a first attachment diameter adjacent to the access surface of the stabilization plate, a lumen surface and a second attachment diameter adjacent to the bone facing surface of the stabilization plate, a retaining channel along the lumen surface, and a third attachment diameter about the retaining channel, wherein the first attachment diameter may be greater than the second attachment diameter, a deformable retaining ring at least partially located within the retaining channel, and a first attachment lumen insert located at least partially in the first attachment lumen and having an inner insert diameter and an outer insert diameter. At least a portion of the spacer may comprise tissue engagement structures. The tissue engagement structures may comprise teeth. The implant for treating the spine may further comprise a bone screw, the bone screw having a screw head and a screw body, wherein the screw head has a head diameter less than the first attachment diameter and greater than the second attachment diameter. The implant for treating the spine may further comprise a bone screw, the bone screw having a screw head and a screw body, wherein the screw head may have a head diameter less than the first attachment diameter and greater than the inner insert diameter. The outer insert diameter may be greater than the second attachment diameter and the inner insert diameter may be smaller than the second attachment diameter. The second attachment diameter and the third attachment diameter may be generally equal. The first attachment lumen insert may be located within the first attachment lumen. The first attachment lumen insert may comprise an inner concave surface. The screw head of the bone screw may comprise an outer convex surface. The outer convex surface of the screw head may be complementary to the inner concave surface of the first attachment lumen insert. The implant for treating the spine may further comprise a second attachment lumen between the access surface and the bone facing surface of the stabilization plate, the lumen having a fourth attachment diameter adjacent to the access surface of the stabilization plate, a lumen surface and a fifth attachment diameter adjacent to the bone facing surface of the stabilization plate.

In another embodiment, a method for treating a spine is provided, comprising providing a first stabilization plate integral with a first spacer, wherein the first stabilization plate may comprise an upper portion, a lower portion and a plurality of attachment holes, wherein at least one attachment hole comprises a retaining structure and an attachment insert, inserting the first spacer into a vertebral space between a first vertebra and a second vertebra, attaching the upper portion of the first stabilization plate to the first vertebra, and attaching the lower portion of the first stabilization plate to the second vertebra. The at least one attachment hole further may comprise a retaining groove and the retaining structure may be a retaining ring positioned in the retaining groove. The attachment insert may comprise a concave surface. The retaining ring may be integral with the attachment insert. Attaching the upper portion of the first stabilization plate to the first vertebra may comprise inserting a bone fastener through one of the plurality of attachment holes located in the upper portion of the first stabilization plate and engaging the first vertebra with the bone fastener. The method for treating a spine may further comprise providing a second stabilization plate integral with a second spacer, wherein the second stabilization plate may comprise an upper portion and a lower portion. The lower portion of the first stabilization plate may have a complementary configuration to the upper portion of the second stabilization plate. The method for treating a spine may further comprise inserting the second spacer into a vertebral space between the second vertebra and a third vertebra.

In another embodiment, an implant for treating the spine is provided, comprising a fixation plate comprising an access surface and a bone facing surface, an upper portion and a lower portion, a spacer connected to the fixation plate at the bone facing surface, a first attachment lumen between the access surface and the bone facing surface of the stabilization plate, the lumen having a first attachment diameter adjacent to the access surface of the stabilization plate, a lumen surface and a second attachment diameter adjacent to the bone facing surface of the stabilization plate, a retaining channel along the lumen surface, and a third attachment diameter about the retaining channel, wherein the first attachment diameter is greater than the second attachment diameter, a deformable retaining ring having a retaining segment and a polyaxial segment and an abutting surface therebetween, wherein the retaining segment of the deformable retaining ring is at least partially located within the retaining channel.

In another embodiment, an implant for treating the spine is provided, comprising a fixation plate having an access surface and a bone facing surface, an upper portion and a lower portion, a spacer, and a non-detachable articulation between the spacer and the bone facing surface of the fixation plate. The non-detachable articulation may be a hinge joint. The hinge joint may have a joint axis that does not intersect the

fixation plate. The hinge joint may have a joint axis configured to be generally perpendicular to a longitudinal axis of a vertebral column when implanted. The hinge joint may have a joint axis configured to be generally parallel to a longitudinal axis of a vertebral column when implanted. The non-detachable articulation may be a ball and socket joint. The non-detachable articulation may comprise a metal cord attached between the spacer and the bone facing surface of the fixation plate. The non-detachable articulation may be a pivoting articulation.

In another embodiment, an implant for treating the spine is provided, comprising a fixation plate having an access surface and a bone facing surface, an upper portion and a lower portion, a spacer, and a pivoting articulation between the spacer and the bone facing surface of the fixation plate. The pivoting articulation may be a hinge joint. The hinge joint may have a joint axis configured to be generally perpendicular to a longitudinal axis of a vertebral column when implanted. The hinge joint may have a joint axis configured to be generally parallel to a longitudinal axis of a vertebral column when implanted. The pivoting articulation may be a ball and socket joint. The pivoting articulation may comprise a metal cord attached between the spacer and the bone facing surface of the fixation plate. The pivoting articulation may be a detachable articulation.

In another embodiment, an implant for treating the spine is provided, comprising a fixation plate having an access surface and a bone facing surface, an upper portion and a lower portion, a spacer, and a rotatable articulation between the spacer and the fixation plate and comprising an axis of rotation, wherein the axis of rotation of the rotatable articulation does not intersect the fixation plate. The axis of rotation of the rotatable articulation may be generally parallel to the fixation plate. The rotatable articulation may be configured to allow reversible separation of the fixation plate and spacer.

In one embodiment, an implant for treating the spine is provided, comprising a fixation plate comprising an access surface and a bone facing surface, an upper portion, a lower portion, and at least one attachment lumen between the access surface and the bone facing surface, a spacer connected to the bone facing surface of the fixation plate, and a locking plate configured to overlie the at least one attachment lumen and comprising an alignment structure to non-frictionally resist rotation of the locking plate when the locking plate may be partially attached to the fixation plate by a fastener. The fixation plate further may comprise two attachment lumens and the locking plate overlies at least one of the two attachment lumens. The locking plate may overlie both of the two attachment lumens. The fixation plate further may comprise a third attachment lumen. The locking plate may overlie the two attachment lumens and the third attachment lumen. The fixation plate further may comprise a fourth attachment lumen. The locking plate may overlie the two attachment lumens, the third attachment lumen and the fourth attachment lumen. At least a portion of the spacer may comprise tissue engagement structures. The tissue engagement structures may comprise teeth. The spacer may be integral with the bone facing surface of the fixation plate. The spacer may be connected to the bone facing surface of the fixation plate by an articulation joint. The articulation joint may be separable or non-separable. The lower portion of the fixation plate may have a configuration complementary to the configuration of the upper portion of the fixation plate. The alignment structure may comprise an elongate member and wherein the fixation plate further may comprise an alignment lumen configured to accept the elongate member. The elongate member and the alignment lumen may be configured to resist rotation of the elongate member when in the alignment lumen. The locking plate may have an X-shaped configuration. The locking plate may have an H-shaped configuration. The locking plate further may comprise a second alignment structure and wherein the fixation plate further may comprise a second alignment lumen configured for accepting the second alignment structure. The locking plate may overlie one of the two attachment lumens and the implant further may comprise a second locking plate overlying the other of the two attachment lumens.

In one embodiment, an implant for treating the spine is provided, comprising a flanged intervertebral spacer comprising a spacer body and a flange section, the flange section comprising an access surface and a bone facing surface, an upper portion, a lower portion, four attachment lumens between the access surface and the bone facing surface and two alignment lumens, a locking plate comprising four attachment cover sections and two alignment pins, wherein the four attachment cover sections are configured to cover the four attachment lumens of the flange section and the two alignment pins are configured for insertion into the two alignment lumens of the flange section.

In another embodiment, a system for attaching to a structure is provided, comprising an attachment device having an access surface, a facing surface, a first attachment lumen between the access surface and the facing surface of the attachment device, the first attachment lumen having a first attachment diameter adjacent to the access surface of the attachment device, a first lumen surface and a second attachment diameter adjacent to the facing surface of the attachment device, a first retaining channel along the first lumen surface, and a third attachment diameter about the first retaining channel, wherein the first attachment diameter may be greater than the second attachment diameter, and a side-biased blocking structure at least partially within the retaining channel having an uncompressed configuration that protrudes into the first attachment lumen and a compressed configuration that does not protrude into the first attachment lumen. The blocking structure may comprise a slope surface. The blocking structure may be an arcuate structure. The arcuate structure may be a ring structure. The blocking structure may be a rectangular plate with a through lumen. The through lumen may be a circular through lumen. The attachment structure may be an interbody spacer. The interbody spacer may be a flanged interbody spacer. The attachment structure may be a fixation plate. The attachment structure may be a vertebral fixation plate. The vertebral fixation plate may be an anterior cervical fixation plate. The blocking structure may comprise a helical spring member. The blocking structure may comprise a leaf spring member. The blocking structure may comprise an elongate bias member. The blocking structure may comprise a second elongate bias member. The elongate bias member may have an arcuate shape.

In one embodiment, a method for treating the spine is provided, comprising providing an orthopedic device comprising a fastener lumen, a securing structure space about the fastener lumen, a securing structure in the fastener lumen and the securing structure space, wherein the securing structure is a bias element and a non-deformable blocking element, inserting a fastener into the fastener lumen, displacing at least a portion of the non-deformable blocking element from the fastener lumen into the securing structure space by compressing the bias element, and passing the head of the fastener past the non-deformable blocking element to allow re-expansion of the bias element.

In another embodiment, a method for treating the spine is provided, comprising providing an orthopedic device com-

prising a fastener lumen with a longitudinal lumen axis, a securing structure space about the fastener lumen, a securing structure in the fastener lumen and the securing structure space, wherein the securing structure may comprise a biased lumen blocker, inserting a fastener into the fastener lumen, eccentrically displacing the biased lumen blocker with respect to the longitudinal axis of the fastener lumen, and passing the fastener past biased lumen blocker to allow reversion of the biased lumen blocker toward a prior position. The method for treating the spine may further comprise reverting the biased lumen blocker toward a prior position. The method for treating the spine may further comprise reverting the biased lumen blocker to a prior position.

In one embodiment, a fastener is provided, comprising a fastener head and fastener shaft, the fastener head comprising a screw lumen, an external groove and one or more openings between the screw lumen and external groove, and an expandable member located at least partially in the external groove and protruding through the one or more openings into the screw lumen. The expandable member may be a ring. The fastener may further comprise a secondary screw configured for the screw lumen.

In another embodiment, an orthopedic fastening system is provided, comprising a fastener comprising a fastener head and a threaded fastener body, wherein the fastener head may comprise a lumen opening, a central internal lumen contiguous with the lumen opening, a side lumen contiguous with the central internal lumen and an expansion member located at least partially within the side lumen and having an expanded configuration and a reduced configuration. The fastener head further may comprise an internal screw and located in the central internal lumen, the internal screw having a proximal position and a distal position. The internal screw in the proximal position may be located about the side lumen and in the distal position may be located distal to the side lumen. The proximal position of the internal screw may displace the expansion member into the expanded configuration. The proximal position of the internal screw may at least partially displace the expansion member out of the side lumen. The proximal position of the internal screw may allow the expansion member to be in the reduced configuration. The expansion member in the reduced configuration may be partially located in the central internal lumen. The proximal position of the internal screw at least partially displaces the expansion member out of the central internal lumen. The expansion member may be biased to the reduced configuration. The fastener head further may comprise an expansion groove contiguous with the side lumen and the expansion member may comprise an elongate body positioned about the expansion groove. The elongate body may be an arcuate elongate body. The expansion member further may comprise a radial elongate body located at least partially in the side lumen. The orthopedic fastening system may further comprise an orthopedic device comprising a fastener lumen adapted to retain the fastener. The fastener lumen may comprise a proximal diameter, a middle diameter and a distal diameter, wherein the proximal diameter may be smaller than the middle diameter. The distal diameter of the fastener lumen may be smaller than the proximal diameter of the fastener lumen. The fastener lumen may comprise a hole insert. The hole insert may comprise a proximal diameter, a middle diameter and a distal diameter, wherein the proximal diameter may be smaller than the middle diameter. The orthopedic device may be an interbody spacer. The interbody spacer may be a flanged interbody spacer. The orthopedic device may be a fixation plate. The orthopedic device may be a vertebral fixation plate. The vertebral fixation plate may be an anterior cervical fixation plate.

In another embodiment, a method for securing an orthopedic device to a bone is provided, comprising providing an orthopedic device comprising a fastener lumen and a fastener, the fastener comprising a fastener head and a fastener body, the fastener head comprising a lumen opening, a central internal lumen contiguous with the lumen opening, an internal screw located within the central internal lumen, a side lumen contiguous with the central internal lumen and an expansion member located at least partially within the side lumen and the central internal lumen and having an expanded configuration and a reduced configuration, attaching the orthopedic device to a bone in a body, moving the internal screw to a position about the side lumen, partially displacing the expansion member with respect to the side lumen, and changing the expansion member to its expanded configuration. The fastener lumen may comprise a middle diameter and a proximal diameter, where the proximal diameter may be less than the middle diameter. The reduced configuration of the expansion member may have a diameter less than the proximal diameter and the expanded configuration of the expansion member may have a diameter between the proximal diameter and the middle diameter. Attaching the orthopedic device to a bone in a body may comprise inserting the fastener into the fastener lumen, and inserting the fastener into the bone of the body. The orthopedic device may be an interbody spacer. The interbody spacer may be a flanged interbody spacer. The orthopedic device may be a fixation plate. The orthopedic device may be a vertebral fixation plate. The vertebral fixation plate may be an anterior cervical fixation plate.

In another embodiment, a method for securing an device to an object is provided, comprising providing a device comprising a fastener lumen and a fastener, the fastener comprising a fastener head and a fastener body, the fastener head comprising a lumen opening, a central internal lumen contiguous with the lumen opening, an internal screw located within the central internal lumen, a side lumen contiguous with the central internal lumen and an expansion member located at least partially within the side lumen and the central internal lumen and having an expanded configuration and a reduced configuration, attaching the device to an object, moving the internal screw to a position about the side lumen, partially displacing the expansion member with respect to the side lumen, and changing the expansion member to its expanded configuration. The fastener lumen may comprise a middle diameter and a proximal diameter, where the proximal diameter may be less than the middle diameter. The reduced configuration of the expansion member may have a diameter less than the proximal diameter and the expanded configuration of the expansion member may have a diameter between the proximal diameter and the middle diameter. Attaching the device to the object may comprise inserting the fastener into the fastener lumen, and inserting the fastener into the object.

The above embodiments and methods of use are explained in more detail below.

BRIEF DESCRIPTION OF THE DRAWINGS

The structure and method of using the invention will be better understood with the following detailed description of embodiments of the invention, along with the accompanying illustrations, in which:

FIG. **1** is a lateral elevational view of a portion of the vertebral column.

FIGS. **2**A and **2**B are superior and lateral elevational views of a thoracic vertebra.

FIG. **3** illustrates a superior elevational view of a cervical vertebra.

FIG. **4** represents a superior elevational view of a lumbar vertebra.

FIGS. **5**A through **5**C are perspective, superior and lateral elevational views of one embodiment of an integrated fixation plate and spacer.

FIG. **6** is a superior elevational view of another embodiment of an integrated fixation plate and spacer.

FIG. **7** is a superior elevational view of another embodiment of an integrated fixation plate and spacer.

FIGS. **8**A and **8**B illustrate superior and lateral elevational views of another embodiment of an integrated fixation plate and spacer.

FIGS. **9**A and **9**B illustrate superior and lateral elevational views of another embodiment of an integrated fixation plate and spacer.

FIGS. **10**A and **10**B are schematic perspective and lateral views of one embodiment of the invention attached to a vertebral column. FIGS. **10**C and **10**D are schematic perspective and lateral views of another embodiment of the invention attached to a vertebral column with angled screws.

FIG. **11** depicts a cross sectional magnified view of one embodiment of a screw and a fixation plate hole.

FIG. **12** depicts a cross sectional magnified view of one embodiment of a screw and a polyaxial fixation plate hole.

FIG. **13**A is a perspective view of one embodiment of the invention comprising a retaining ring and fixation hole insert. FIGS. **13**B and **13**C are cross sectional views of the device in FIG. **13**A.

FIG. **14** is a cross sectional view of another embodiment of the invention comprising an angled retaining ring.

FIGS. **15**A and **15**B are frontal and perspective views of one embodiment of a complementary two spacer system.

FIGS. **16**A and **16**B are frontal and perspective views of one embodiment of a complementary three spacer system.

FIGS. **17**A and **17**B are frontal and perspective views of one embodiment of a complementary four spacer system.

FIG. **18** is a frontal view of one embodiment of the invention comprising a variable width spacer system.

FIG. **19** is a frontal view of one embodiment of the invention comprising a variable height spacer system.

FIG. **20** is a frontal view of one embodiment of a complementary identical four spacer system.

FIG. **21** is a frontal view of another embodiment of a complementary three spacer system.

FIG. **22** is a frontal view of another embodiment of a complementary four spacer system.

FIG. **23** is a frontal view of one embodiment of a complementary five spacer system.

FIG. **24** is a frontal view of another embodiment of a complementary four spacer system.

FIGS. **25**A and **25**B represent frontal and lateral views of one embodiment comprising a complementary overlapping spacer system.

FIGS. **26**A to **26**D are various views of a pivotable interbody-plate device.

FIG. **27** is isometric elevational view of another embodiment of a fastener retaining assembly.

FIG. **28** is a cross-sectional view of a fixation device with the fastener retaining assembly of FIG. **27** and an inserted screw.

FIG. **29**A is a cross-sectional view of another embodiment of a fastener with and expansion ring. FIG. **29**B is an exploded view of the fastener and expansion ring in FIG. **29**A.

FIGS. **30**A and **30**B are superior oblique views of a fastener retaining body with side-bias members in uncompressed and compressed positions, respectively.

FIG. **31** is an oblique cut-away view of the fastener retaining body in FIG. **30**A within a retaining body space about a fastener lumen.

FIG. **32**A is a superior elevational of a fastener head positioned within a fastener lumen whereby the fastener has displaced the fastener retaining body into the compressed position. FIGS. **32**B and **32**C are superior side cross-sectional views of fastener head and fastener retaining body from FIG. **32**A.

FIG. **33**A is a superior elevational of a fastener head positioned within a fastener lumen whereby the fastener head has fully passed through the fastener retaining body and the fastener retaining body has reverted to its uncompressed configuration. FIGS. **33**B and **33**C are superior side cross-sectional views of fastener head and fastener retaining body from FIG. **33**A.

FIG. **34**A is an anterior elevational view of one embodiment of the invention comprising a locking plate and flanged interbody fusion device. FIG. **34**B depicts the locking plate of FIG. **34**A separated from the flanged interbody fusion device.

FIGS. **35**A and **35**B are oblique and anterior elevational views of another embodiment of the invention comprising dual locking plates.

FIGS. **36**A and **36**B are side and anterior elevational view of another embodiment of the invention comprising an angled locking plate.

FIG. **37** is a cross-sectional view of another embodiment of a fastener with an expansion ring.

DETAILED DESCRIPTION OF THE PREFERRED EMBODIMENT

Advancing age, as well as injury, can lead to degeneration in the bones, discs, joints, and ligaments of the spine producing pain from nerve root compression. Under certain circumstances, alleviation of pain can be provided by performing a spinal fusion. Spinal fusion is a procedure that involves joining two or more adjacent vertebrae so that they no longer are able to move relative to each other.

In existing spinal fusion implants there have also been problems with loosening and backing out of screws into the patient's throat area. Backout is the exhibited tendency of bone screws, which affix the bone plate to the bone(s), to loosen with respect to both the plate and bone, resulting in poor fixation, fusion and ultimately, healing. Essentially, this loosening of the bone screw causes the screw to work itself out of the bone into which it is implanted. This results in the bone plate being poorly fixed in place thus becoming devoid of its fixation capabilities. Usually, backout is caused by the chronic stress of bodily movement. While such loosening can be benign if limited in scope, it may lead to complications such as complete failure of the fixation device or incomplete bone fusion. Backout is particularly prevalent in areas of high bodily stress and movement, such as the spine.

To alleviate backout and its associated problems, current systems utilize secondary locking screws, locking collars or other secondary locking devices that hold the bone screws in place after deployment within the bone. In most systems, the bone screw is affixed into the bone through an opening in a bone plate. A locking device is then inserted into the bone screw. The locking device engages the head of the bone screw and is tightened which results in the bone screw being fixed in place within the bone, thus preventing backout.

While a locking screw or collar can alleviate backout, successful use of such locking device systems in the anterior cervical spine is particularly difficult because of anatomic constraints. Systems using multiple types of screws or collars

to hold the bone screw in place are difficult to deploy within the confines of a small operating area available at the cervical spine. Furthermore, due to the small operating area, the surgeon implanting the device has great difficulty determining if the device is properly deployed. Any instrumentation implanted in the region must be minimally intrusive, yet have adequate strength to withstand the biomechanical loads to which it will be subjected. Thus, while current systems can help reduce instances of backout, their complex nature makes proper deployment very difficult and increases the chance of surgical error.

There is a need for an implant having a locking mechanism that can be easily and reliably locked in place to prevent the loosening of and backing out of the bone screws used to attach the implant to the vertebrae in the anterior aspect of the cervical, thoracic, and lumbar spine.

There is also a need for implants that can be implanted along a series of adjacent vertebrae. Implants adapted for use in the lumbar spine and the thoracic spine become much less usable in the cervical spine because of differences in anatomy. In the lumbar spine, the disc spaces are about 25% as tall as the vertebral bodies (i.e., the vertebral bodies are generally four times taller than the intervening disc space). In the cervical spine, the disc space can be 50% of the height of the vertebral bodies. The disc spaces in the cervical spine are generally not greater than 7 or 8 mm tall in most people.

Attachment of one fixation plate between two vertebrae often prevents the attachment of additional fixation plates between one of two vertebrae and an adjacent vertebra. This is especially true in the cervical spine region. The attachment of one fixation plate will reduce the surface area available to attach another fixation plate due to the small size of the cervical vertebrae and the minimum size required for each fixation plate. Because of this limitation in existing spinal fixation devices, treatment of spinal disorders may be suboptimal because disease in adjacent vertebrae cannot be treated adequately.

A. Anatomy of the Spine

As shown in FIG. **1**, the vertebral column **2** comprises a series of alternating vertebrae **4** and fibrous discs **6** that provide axial support and movement to the upper portions of the body. The vertebral column **2** typically comprises thirty-three vertebrae **4**, with seven cervical (C1-C7), twelve thoracic (T1-T12), five lumbar (L1-15), five fused sacral (S1-S5) and four fused coccygeal vertebrae. FIGS. **2**A and **2**B depict a typical thoracic vertebra. Each vertebra includes an anterior body **8** with a posterior arch **10**. The posterior arch **10** comprises two pedicles **12** and two laminae **14** that join posteriorly to form a spinous process **16**. Projecting from each side of the posterior arch **10** is a transverse **18**, superior **20** and inferior articular process **22**. The facets **24**, **26** of the superior **20** and inferior articular processes **22** form facet joints **28** with the articular processes of the adjacent vertebrae.

The typical cervical vertebrae **30**, shown in FIG. **3**, differ from the other vertebrae with relatively larger spinal canals **32**, oval shaped vertebral bodies **34**, bifid spinous processes **36** and foramina **38** in their transverse processes **40**. These foramina transversaria **38** contain the vertebral artery and vein. The first and second cervical vertebrae also further differentiated from the other vertebrae. The first cervical vertebra lacks a vertebral body and instead contains an anterior tubercle. Its superior articular facets articulate with the occipital condyles of the skull and are oriented in a roughly parasagittal plane. The cranium is able to slide forward and backwards on this vertebra. The second cervical vertebra contains an odontoid process, or dens, which projects superiorly from its body. It articulates with the anterior tubercle of the atlas, forming a pivot joint. Side to side movements of the head occur at this joint. The seventh cervical vertebra is sometimes considered atypical since it lacks a bifid spinous process.

Referring to FIG. **4**, the typical lumbar vertebrae **42** is distinguishable from the other vertebrae by the absence of foramina transversaria and the absence of facets on the surface of the vertebral body **44**. The lumbar vertebral bodies **44** are larger than the thoracic vertebral bodies and have thicker pedicles **46** and laminae **48** projecting posteriorly. The vertebral foramen **50** is triangular in shape and larger than the foramina in the thoracic spine but smaller than the foramina in the cervical spine. The superior **52** and inferior articular processes (not shown) project superiorly and inferiorly from the pedicles, respectively.

B. Flanged Spacer

In one embodiment of the invention, an interbody vertebral implant **100** is provided. As shown in FIGS. **5**A through **5**C, in one embodiment, the implant **100** comprises a stabilization or fixation plate **102** having an upper portion **104** and a lower portion **106**, and a bone facing surface **108** and an access surface **110**. In use, typically the bone facing surface **108** will actually contact the vertebral bone surface, but in other embodiments, other structures or components may lie in between the bone facing surface **108** and the bone surface of the vertebra. Each upper portion **104** and lower portion **106** has one or more spaces or holes **112** oriented between the bone facing surface **108** and the access surface **110** that are configured to accept screws and/or other attachment devices for anchoring the implant **100** to the vertebral bone. One or more spacers or spacing structures **114** are located on the bone facing surface **108** of the fixation plate **102**. The spacers **114** are typically integrated with the fixation plate **102** about the bone facing surface **108**.

1. Spacer Component

The spacer may comprise any structure configured to maintain a separation and resist compression between two adjacent vertebral bodies. The spacer may have any of a variety of overall shapes, including but not limited to a rectangular box, a trapezoidal box, H-shaped, O-shaped, V-shaped, with or without one or more lumens within the spacing structure. As shown in FIGS. **5**B and **5**C, the spacer **114** has a base **116**, a superior surface **118** and an inferior surface **120**, and side surfaces **122**, **124**, and a posterior surface **126**. Each surface **118**, **120**, **122**, **124**, **126** need not be flat, and may be curved or undulating or any combination thereof. The upper and lower surfaces **118**, **120** are configured for facing the superior and inferior vertebral bodies **8** or **34** adjacent to an implantation site. The relative configuration of the upper surface **118** and lower surface **120** may vary, depending upon the relative position desired between the two adjacent vertebrae, the anatomical shape of the vertebrae, ease of insertion of the implant and other factors. For example, if a neutral vertical alignment is desired between two vertebrae, the upper and lower surfaces **118**, **120** may have generally parallel planar orientations. If a non-neutral alignment is desired, for instance to maintain a natural spinal curvature in the cervical region, the upper and lower surfaces **118**, **120** may have a wedge-like relationship to allow fixation of the vertebrae in the desired non-neutral position. A non-neutral alignment with respect to the anterior-posterior direction may also be used to compensate for excessive lordosis or kyphosis in other portions of the vertebral column. The height of the spacing structure **116** at any section between the upper and lower surfaces **118**, **120** may be further configured to accommodate degenerative changes or anatomical anomalies to provide fixation in the desired relative position. Likewise,

the side surfaces **122**, **124** of the spacing structure **114** may be generally parallel or skewed. In one embodiment, the side surfaces **122**, **124** of the implant **100** taper with increasing distance from the base **116** of the implant **100**. A tapered spacing structure may facilitate insertion of the implant **100** into the intervertebral space. In other embodiments, the one or more side surfaces may flare distally or have both tapering and flaring portions.

The device depicted in FIGS. **5**B and **5**C is one embodiment of the invention comprising a closed-shaped spacer **114** with a lumen **128** between the superior and inferior surfaces **118**, **120**. The side surfaces **122**, **124** may have a slight taper along the posterior direction. FIG. **6** depicts one embodiment of the invention with a block spacer **130** that lacks a spacer lumen. FIG. **7** depicts another embodiment comprising an H-shaped spacer **132** with two protruding members **134**, **136** and one bridge member **138** between the two protruding members **134**, **136**. The bridge member **138** may be oriented in any of a variety of positions between the two protruding members **134**, **136**. The two protruding members **134**, **136** need not have a similar or symmetrical shape. Some embodiments of the invention may have more than two protruding members **134**, **136** and/or one or more bridge members **138**.

FIGS. **8**A and **8**B illustrate another embodiment of the invention comprising a spacer **140** with two posterior members **142**, **144** where each posterior member **142**, **144** has a window or hole **146** between the outer side surface **148** and inner side surface **150** of the posterior member. This window or hole may allow bony growth into the window or hole and between the two posterior members **142**, **144**. The space **146**, **152** within and/or between the posterior members **142**, **144** may also be filled with graft materials (not shown). The graft material may be an autograft, allograft, xenograft or synthetic material. Synthetic graft material may be ceramic-based, silicon-based or calcium-based. The graft material may also include osteoinductive factors to promote bone ingrowth. One skilled in the art will appreciate that there are many varieties of synthetic graft materials and constituents that may be used between or about the hyoid bone segments.

One or more surfaces of the implant may also have surface projections, indentations, or holes or pores that can further alter the characteristics of the implant. Referring to FIGS. **9**A and **9**B, in one embodiment, angled projections, barbs, teeth **154** or ramped surfaces which incline outwardly from one or more spacer surfaces toward the fixation plate **102** may be provided on one or more surfaces that allow insertion of the spacing structure in one direction but resist movement in the opposite direction. These teeth **154** may be advantageous in reducing the migration of the device out of the intervertebral space. Improved fixation of the spacer **156** may maintain device position during drilling of the screw holes into the vertebral bodies, and may also reduce the forces acting upon the screws or other retaining structures, thereby reducing the risk of backout. The teeth **154** are preferably provided on the superior and/or inferior surfaces **118**, **120** of the spacer **156**, but other surfaces may also have teeth or other tissue engagement structures.

As illustrated in FIGS. **9**A and **9**B, in one embodiment, the tissue engagement structures may be combined with indentations, holes or pores for allowing bony ingrowth or filling with bony matrix or graft materials as previously described. These holes may be utilized with other surface features to further enhance insertion and stabilization of the implant.

In one embodiment, the spacer has a height of about 4 mm to about 50 mm, or preferably about 4 mm to about 12 mm. Occasionally, the spacer has a height of about 6 mm to about 9 mm. In some embodiments, the spacer has a length along the AP axis, as measured from the bone facing surface of the fixation plate to the most posterior end of the spacer, of about 5 mm to about 25 mm. In some embodiments, the spacer length is about 10 mm to about 15 mm. The width of the spacer is generally about 5 mm to about 25 mm, and in some situations, about 10 mm to about 15 mm. One skilled in the art can dimension the spacer based upon the implantation location and specific vertebral morphology, neurological anatomy and disease state.

The spinal fusion implant may include, be made of, treated, coated, filled, used in combination with, or contain artificial or naturally occurring materials suitable for implantation in the human spine. These materials include any source of osteogenesis, bone growth-promoting materials, bone derived substances, bone morphogenetic proteins, hydroxyapatite, genes coding for the production of bone, and bone including, but not limited to, cortical bone. The implant can also be formed of material such as metal including, but not limited to, titanium and its alloys, surgical grade plastics, plastic composites, ceramics, or other materials suitable for use as a spinal fusion implant. In some embodiments, the device comprises a radiolucent material, a radio-opaque material, or a combination thereof. A device that is partially or completely radiolucent may be advantageous when evaluating the effect of the implant post-implantation. Many existing spinal fixation plates and/or spacers obscure visualization of the vertebrae, which can complicate post-operative treatment, diagnosis and prognosis of the patient's condition. The implant may include at least in part materials that are bioabsorbable in the body. The implant of the present invention can be formed of a porous material or can be formed of a material that intrinsically participates in the growth of bone from one of adjacent vertebral bodies to the other of adjacent vertebral bodies. The implant may be treated with, coated with, or used in combination with substances to inhibit scar tissue formation. The implant of the present invention may be modified, or used in combination with materials to provide antibacterial properties, such as, but not limited to, electroplating or plasma spraying with silver ions or other substance. The implant may optionally comprise an electrical source to provide iono-phoresis of the silver ions into the surrounding tissue to prevent infection. The antibacterial properties may include bactericidal and/or bacteriostatic characteristics. Similarly, antifungal characteristics may also be provided. Any of these materials as appropriate may be used at any time after the implant(s) are inserted.

2. Fixation Component

The fixation plate may have a generally flat configuration, curved configuration or combination thereof. Optionally, each surface of the fixation plate may also have a generally flat or curved configuration or combination thereof. Each surface of the fixation plate need not have the same configuration. The edges of the fixation plate may optionally be rounded, smoothed or polished. In one embodiment, the flange is dimensioned such that flange extends about 2 mm beyond the edges of the base of the spacer. In some embodiments of the invention, the fixation component is dimensioned to extend generally about 1 mm to about 20 mm beyond the cross sectional border of the spacer component at its interface with the fixation plate. In other embodiments, the flange may extend by 3 mm or 4 mm or more beyond the spacer base. The flange may or may not extend uniformly along the spacer edges. The shape of the flange may be different from the shape of the spacer base.

In some embodiments, the average thickness of the fixation plate is within the range of about 1 mm to about 5 mm. In other embodiments, the average thickness of the fixation plate

is within the range of about 1.5 mm to about 3.0 mm. The thicknesses of the fixation plate need not to be uniform. In one embodiment, the fixation plate is conformable to the vertebral surfaces of the implantation sites.

In other embodiments of the invention, the spacer component is attached to a fixation component comprising a mesh or lattice. The fixation component may also be made from a material that is the same or different from the spacer component. In some instances a fixation component and a spacer component having different materials may be beneficial because the spacer component may be configured to withstand compressive forces while the fixation component is configured to withstand primarily tension forces. The fixation component may comprise a polymer, a woven material, or a combination thereof.

Referring back to FIGS. **5**A through **5**C, each upper portion and lower portion of the fixation plate **102** has one or more spaces or holes **112** oriented between the bone facing surface **108** and access surface **110** that are configured to accept screws and/or other attachment elements for anchoring the implant to the vertebral bone. As shown in FIGS. **10**A and **10**B, in some embodiments of the invention, one or more bone screws **158** configured for insertion through one or more screw holes **112** in the fixation plate **102** are provided. As shown in FIGS. **10**C and **10**D, each bone screw **158** typically comprises a screw head **160** and a screw body **162**. The bone screws **158** and/or anchors may or may not be self-tapping. In some embodiments, the invention further comprises bone anchors comprising an anchor head and an anchor body. The anchor head is adapted to interface with the fixation plate to hold the fixation plate against the adjacent vertebral bone structures. The anchor body comprises threads or barbs for piercing or inserting into bone and fixing the position of the anchor head. The anchor body may or may not form an interface with the holes of the fixation plate to further fix the position of the fixation plate with respect to the vertebral bone.

Each hole **112** of the flange or fixation plate **102** need not have the same configuration or size. The holes **112** are typically round in cross section and dimensioned to allow passage of a screw body **162** therethrough while resisting passage of the screw head **160** completely through the hole **112**. In other embodiments, however, at least a portion of the hole **112** may have a non-round cross-section, such as an oval, square, rectangle, polygonal or other closed shape. The inside surface of the holes **112** may be covered with a lubricious coating to facilitate insertion and/or movement of a screw or other attachment device through the hole.

In one embodiment, depicted in each hole FIG. **11**, comprises a first inside surface **164** adjacent to the access surface **110** having a first diameter **166**, and a second inside surface **168** adjacent to the bone facing surface **108** having a second diameter **170**. In some embodiments, either one or both of the first inside surface **164** and second inside surface **168** may be dimensioned to align a corresponding screw **172** in generally one particular orientation. In one embodiment, the second inside surface **168** of a screw hole **112** comprises threads **174** and adapted to form a rotatable mechanical interfit with threads **176** on a corresponding screw **172** inserted through the hole **112**. The first inside surface **164** of the screw hole **112** may also be similarly threaded, or may be configured to accept the head **178** of a screw **172** inserted through the hole **112** to allow flush positioning or recessed positioning of the screw head **178** with the access surface **110** of the fixation plate **102**.

The bone anchor or screw **172** for the particular flange hole **112** is typically selected so that the largest diameter of the screw or anchor head **178** is larger than the second diameter **170** of the hole **112**. For non-recessed screws or anchors, the largest diameter of the screw or anchor head **178** may be larger than the first diameter **166**. For flush, partially or completely recessed screws or anchors, the largest diameter of the screw or anchor head **178** is between the first diameter **166** and the second diameter **170**. In one embodiment, the flange holes **112** may have a first diameter **166** of about 3 mm to about 10 mm, and in other embodiments, may have a diameter of about 4 mm to about 6 mm. In one embodiment, the flange holes **112** may have a second diameter **170** of about 0.1 mm to about 4.0 mm smaller than the first diameter, and in one embodiment, may have a second diameter **170** of about 0.2 mm to about 1.0 mm smaller than the first diameter **166**, or even about 0.2 mm to about 0.4 mm smaller than the first diameter **166**. In one embodiment, the screw head or anchor head **178** may have a diameter of about 3.2 mm to about 10.2 mm, and in one embodiment, may have a diameter of about 4.4 mm to about 6.4 mm.

For embodiments where the first inside surface **164** of the hole **112** is adapted for recessed positioning of the screw head **178**, the recessed positioning may be partial or complete. With partial recessed positioning, only a portion of an inserted screw lies below the access surface **112** of the fixation plate **102**, while with complete recessed positioning, all the screw head **178** may lie at or below the access surface **112** of the fixation plate **102**. The screw hole **112** about the first inside surface **164** can have any of a variety of cross sectional shapes.

In some embodiments, the one or more holes are configured to align a screw **172** having a general perpendicular orientation with respect to either or both the access surface **110** or bone facing surface **108** of the flange **102**. In some embodiments, one or more holes **112** may be configured to align a screw in a skewed orientation. Sometimes, the skewed orientation may have a slight superior or inferior angle, depending upon whether the hole is located on the upper portion or lower portion of the flange, respectively. A skewed orientation in the superior/inferior direction may reduce the risk that the screw **172** remains secure in the vertebral body by providing sufficient bone structure between the screw body and the intervertebral space. In one embodiment, a screw hole **112** is configured to accept a screw **172** in an orientation that is within the range of about 0 degrees to about 60 degrees superiorly with respect to the plane between the two corresponding vertebrae. In one embodiment, the screw hole is configured to accept a screw **172** in an orientation that is within the range of about 5 degrees to about 30 degrees superiorly, and in some embodiments, to accept a screw **172** in an orientation that is within the range of about 10 degrees to about 20 degrees superiorly. In one embodiment, a screw hole **172** is configured to accept a screw **172** in an orientation that is within the range of about 0 degrees to about 60 degrees inferiorly with respect to the transverse plane between the two corresponding vertebrae **4**. In one embodiment, the screw hole **112** is configured to accept a screw **172** in an orientation that is within the range of about 5 degrees to about 30 degrees inferiorly, and in some embodiments, to accept a screw **172** in an orientation that is within the range of about 10 degrees to about 20 degrees inferiorly. The particular orientation of a screw hole **112** may be determined by the dimensions of the screw **172** used with the device and the vertebrae **4** to which the device is to be attached.

One or more holes **112** of the flange **102** may also be configured to a skewed angle in the medial/lateral direction. Typically, the hole **112** may be configured with a medially directed screw orientation to avoid insertion of a screw

through the outer surface of the vertebral body or through a pedicle, but a lateral screw orientation may also be used. Screw holes **112** located medially on the flange **102** may have a lateral orientation. In one embodiment, a screw hole **112** is configured to accept a screw **172** in an orientation that is within the range of about 0 degrees to about 45 degrees medially with respect to the sagittal plane through a vertebra **4**. In one embodiment, the screw hole **112** is configured to accept a screw **172** in an orientation that is within the range of about 5 degrees to about 30 degrees medially, and in some embodiments, to accept a screw **172** in an orientation that is within the range of about 10 degrees to about 20 degrees medially. In one embodiment, a screw hole **112** is configured to accept a screw **172** in an orientation that is within the range of about 0 degrees to about 45 degrees lateral with respect to the sagittal plane through the vertebrae **4**. In one embodiment, the screw hole is configured to accept a screw **172** in an orientation that is within the range of about 5 degrees to about 30 degrees laterally, and in some embodiments, to accept a screw **172** in an orientation that is within the range of about 10 degrees to about 20 degrees laterally. One or both of the first and second inside surfaces **165**, **168** may be threaded and capable of forming a rotatable interfit with the threads of a corresponding screw **172** or other attachment device. One or more holes **112** of the flange **102** may also be configured to accept and/or orient the tip of a corresponding drill guide so that screw holes in the vertebrae **4** may be created after the device has been positioned at its implantation site. By drilling screw holes into the vertebrae **4** after the positioning of the device, the risk of misaligned vertebral screw holes and flange holes **112** may be reduced. Misalignment may result in an ill-fitting and unstable implant.

In some embodiments of the invention, shown in FIG. **12**, one or more screw holes of the fixation plate or flange may be configured to allow a range of corresponding screw orientations when the screw is inserted through the screw hole. In one embodiment of the invention, a polyaxial screw hole **180** wherein at least a portion of the inner surface **182** of the polyaxial screw hole **180** having a concave surface **184** that is capable of accepting a range of screw orientations within the screw hole **180**. The concave surface **184** typically comprises an entire circumference of the inner surface of the screw hole **180**, but in some embodiments, may comprise only one or more portions of a screw hole **180** circumference. Concave surfaces along limited portions of a circumference may allow pivoting or a range of movement along one axis of the screw hole **180** while limiting the pivoting along another axis of the screw hole **180**. In some embodiments, the distal surface **188** of the screw head **190** may be configured with a convexity complimentary to the concave surface **184** of the screw hole **180**.

In one embodiment, a screw hole **180** is configured to provide a screw orientation range of about 0 degrees to about 60 degrees from the central axis of the screw hole. In one embodiment, the screw hole **180** is configured to provide a screw orientation range up to about 5 degrees to about 30 degrees from the central axis of the screw hole, and in some embodiments, to provide a screw orientation range up to about 10 degrees to about 20 degrees. In one embodiment, a screw hole **180** is configured to provide a screw orientation range of about 0 degrees to about 60 degrees superiorly with respect to the plane between the two corresponding vertebrae **4**. In one embodiment, the screw hole **180** is configured to provide a screw orientation range of about 5 degrees to about 30 degrees superiorly, and in some embodiments, to provide a screw orientation range of about 10 degrees to about 20 degrees superiorly. In one embodiment, a screw hole **180** is configured to provide a screw orientation range of about 0 degrees to about 60 degrees inferiorly with respect to the transverse plane between the two corresponding vertebrae. In one embodiment, the screw hole **180** is configured to provide a screw orientation range of about 5 degrees to about 30 degrees inferiorly, and in some embodiments, to provide a screw orientation range of about 10 degrees to about 20 degrees inferiorly. The particular orientation of a screw hole may be determined by the dimensions of the screw **186** used with the device and the vertebrae **4** for which the device is to be attached. One or more holes **180** of the flange **102** may also be configured to a skewed angle in the medial/lateral orientation. Typically, the hole **180** may be configured with a medially directed screw orientation to avoid insertion of a screw **186** through the outer surface of the vertebral body **8** or through a pedicle **12**, but a lateral screw orientation may also be used. In one embodiment, a screw hole is configured to provide a screw orientation range of about 0 degrees to about 45 degrees medially with respect to the sagittal plane through a vertebra. In one embodiment, the screw hole is configured to provide a screw orientation range of about 5 degrees to about 30 degrees medially, and in some embodiments, to provide a screw orientation range of about 10 degrees to about 20 degrees medially. In one embodiment, a screw hole is configured to provide a screw orientation range of about 0 degrees to about 45 degrees lateral with respect to the sagittal plane through the vertebra. In one embodiment, the screw hole is configured to provide a screw orientation range of about 5 degrees to about 30 degrees laterally, and in some embodiments, to provide a screw orientation range of about 10 degrees to about 20 degrees laterally. FIGS. **10**A and **10**B depict one embodiment of the invention comprising an implant with a square-shaped flange **102** with four polyaxial screw holes **164** wherein the screws used to secure the implant to the vertebrae were inserted with an orientation that is in a generally neutral orientation with respect to the bone facing surface **108** of the flange or fixation plate **102**. In one embodiment, the screw holes **164** in the upper portion of the flange **102** may be configured in the vertical axis to allow an insertion angle of about +30 degrees to about −15 degrees. The screw holes **164** in the lower portion of the flange **102** may be configured to provide an insertion range of about +20 degrees to about −5 degrees in the vertical axis. FIGS. **10**C and **10**D shows the use of the implant in FIGS. **10**A and **10**B with at least one screw **158** inserted through an upper screw hole **164** of the implant and into the upper vertebral body of an intervertebral space with a superiorly angled orientation. In some instances, this screw orientation may reduce the risk of bone fracture into the intervertebral space with or without migration of the screw body into the same space.

In one embodiment of the invention, one or more additional screw hole structures are provided to further interact with an inserted screw. FIGS. **13**A through **13**C depict one embodiment of the invention comprising an expandable/collapsible retainer ring or collar **200**. The retainer ring/collar **200** allows insertion of a corresponding screw **202** in one direction through a screw hole **204** but resists movement of the screw **202** in the opposite direction. The retainer ring/collar **200** may be positioned within one or more screw holes **204** with a recess or indentation **206** along at least a portion of its circumference capable of accepting at least the outside diameter portion of the retainer ring/collar **200**. The recess or indentation **206** typically comprises a circumferential channel of the flange hole **204** having a recess diameter **208** that greater than the first diameter **210** of the flange hole **204**. The recess or indentation **208** is typically located closer to the access surface **110** of the fixation plate **102**, rather than the bone facing

surface **108**, but may also be located at other positions within the screw hole **204**. The ring or collar **200** has an outside retainer diameter **212** and an inside retainer diameter **214**, a first surface **216** between the outside retainer diameter **212** and inside retainer diameter **214** closer to the access surface **110** of the fixation plate **102** and a second surface **218** between the outside retainer diameter **212** and inside retainer diameter **214** closer to the bone facing surface **108** of the fixation plate. Changes in the inside retainer diameter of the retainer may or may not alter the outside retainer diameter of the retainer, and vice versa. In some embodiments, the retainer ring or collar has a completely closed configuration, but in other embodiments, as shown in FIGS. **13**A to **13**C, the ring or collar **200** has an interrupted configuration comprising two ends **220**, **222** about an expansion space **224**. The retainer ring/collar **200** is capable of radial expansion and collapse by altering the distance between the two ends **220**, **222**.

In one embodiment, the retainer ring **200** is configured to resiliently collapse such that the outside retainer diameter **212** is less than the first diameter **166** of the flange hole **204** so that the retainer ring may be passed into the flange hole recess **206**. The retainer ring **200** can then re-expand its outer retainer diameter **212** to at least partially occupy the flange hole recess **206**. The retainer ring **200** is further configured to resiliently expand its inside retainer diameter **214** to allow passage of a screw or anchor head **226** through the retainer ring/collar **200**. Expansion of the inside retainer diameter **214** may or may not result in expansion of the outside retainer diameter **212** to occupy additional space within the flange hole recess. In some embodiments, the retainer ring/collar comprises a compressible or deformable material such that the inside retainer diameter can be increased without requiring increase in the outside retainer diameter.

By configuring the retainer ring/collar **200** to resiliently deform when the screw or anchor head **226** is passed through the retainer ring/collar **200** with an increased force, the retainer ring/collar **200** can resist backout of the screw **202** or anchor where the backout forces acting on the screw **202** or anchor are insufficient to cause ring/collar **200** expansion and allow movement of the screw **202** or anchor. The force required to backout the screw or anchor may be increased relative to the force required to pass the screw or anchor through the retaining ring/collar by providing a ramped surface about the retaining ring/collar and/or the screw or anchor head.

Referring to FIG. **14**, a surface **228** about the inside retainer diameter **214** of a ring/collar **230** that is ramped or inclined radially inward toward the bone contact surface **108** of the fixation plate **102** may facilitate the insertion of the screw **202** or anchor through the retainer ring/collar while providing a larger second surface **232** of the screw or anchor to resist backout. Similarly, a screw or anchor head may also have a ramped or inclined surface radially outward from the screw body that may facilitate insertion of the screw or anchor through the retainer ring/collar while providing a larger screw or anchor head surface area to resist backout.

The cross sectional shape of the retainer structure may be any of a variety shapes, including a circle, oval, squares, rectangles, polygonal or other closed shape. The cross sectional shape of the retainer may vary along the length of the retainer. The cross sectional shape of the screw hole indentations may also be any of a variety of shapes, including a circle, oval, squares, rectangles, polygonal or other closed shape. The cross sectional shape of the retainer along the outside diameter may or may not be similar to the cross sectional shape of the screw hole circumferential indentation or recess.

In one embodiment of the invention, shown in FIGS. **13**B and **13**C, the implant further comprises an flange hole insert **234** that provides an intermediate layer of material between the screw or anchor head **226** and the inner surface **236** of the flange hole **204**. The insert **234** may comprise a generally polymer, metallic, or ceramic member comprising an outer flange hole contacting surface **238** and an inner anchor contacting surface **240**, where the outer flange hole contacting surface **238** is shaped to conform to at least a portion about the inner surface **236** of the flange hole **204**. The anchor contacting surface **240** may or may not conform to at least a portion of the screw or anchor head surface **242**. In one embodiment of the invention, the flange hole insert **234** is capable of absorbing wear forces transmitted between the fixation plate **102** and the screw **204** or anchor. Absorption of the forces between these two components of the implant may reduce the risk of implant failure and/or loosening that occurs at the interface between the two components.

In one preferred embodiment, the flanged interbody device comprises a polyaryl polymer, including but not limited to PEK, PEEK, PEKK, PEKEKK or a blend thereof, and the insert comprises a titanium or titanium alloy. Other combination may also be used as is known by those with skill in the art.

3. Complementary Flange Configurations

In one preferred embodiment, the flange is configured for positioning across an intervertebral space such that the upper portion of the flange is adapted to contact the superior vertebra and the lower portion of the flange is adapted to contact the inferior vertebra about an intervertebral space. In other embodiments, the flange may be configured to contact a single vertebra about an intervertebral space, or more than two vertebrae. In some embodiments, the flange may span two or more intervertebral spaces. Typically, the implant is adapted for positioning about the anterior surface of the vertebrae, along the anterior surfaces of vertebral bodies. In some instances, the flange of the implant may also be configured to contact other vertebral structures such as the pedicles, transverse processes, facet joints, superior and inferior articular processes and spinous processes. In still other embodiments, the implant is configured to attach to these vertebral structures without attaching or contacting the vertebral bodies.

In one embodiment of the invention, illustrated in FIGS. **5**A through **5**C, the flange **102** of implant **100** has a general square or rectangular shape and is dimensioned to allow stable attachment of the implant **100** to the adjacent vertebral bodies **8**. The corners where any two sides of the flange meet may be angled, rounded or curved. The flanged implant **100** depicted in FIGS. **5**A through **5**C comprises rounded corners. In other embodiments, the flange **102** may comprise any of a variety of other shapes, including trapezoids, circles, ovals, polygons or other closed shapes. The flange **102** may or may not have a symmetrical configuration with respect the upper and lower portions and/or the left and right portions of the flange.

Depending upon the location of implantation, the shape and/or dimensions of the flange may or may not allow implantation of the additional implants at adjacent intervertebral spaces. In some embodiments, depicted in FIGS. **15**A and **15**B, the flange **244** of one implant **246** is configured and dimensioned to form a complementary shape with a corresponding adjacent implant and/or to prevent overlap or mechanical interference with an adjacent implant **248**. The complementary fit between two adjacent implants may be loose or tight. The interface between the corresponding flanges may be non-overlapping as depicted in FIGS. **15**A and **15**B, or overlapping, as shown in FIGS. **25**A and **25**B.

The complementary flanges may be asymmetric or symmetric with respect to the left and right portions of the flanges, and/or the upper and lower portions. Thus, the flange may be configured such that the vertical orientation of the flange, whether used right-side up or upside-down, does not affect the complementary interfacing with adjacent flanges.

FIGS. **15**A and **15**B depict one embodiment of the invention comprising an implant system with a superior implant and an inferior implant. The inferior portion **252** of the superior implant flange **244** has a right-sided asymmetry that is complementary to the corresponding left-sided asymmetry of the superior portion **254** of the inferior implant flange **250**. The complementary-shaped flanges allow implantation of the superior flange and inferior flange at adjacent intervertebral spaces that would not otherwise allow implantation of traditionally shaped fixation plates. In other embodiments of the invention, the left/right asymmetry of each implant in the fixation system may be opposite. Furthermore, in some embodiments, as shown in FIGS. **15**A and **15**B, the superior implant **246** and flange **244** is identical to inferior implant **248** and flange **250** but is rotated 180 degrees.

In one embodiment of the invention, illustrated in FIGS. **16**A and **16**B, the fixation system may further comprise one or more middle flange implants **256**, a superior end flange implant **246** and/or an inferior end flange implant **248**. The superior flange implant **246** and inferior flange implant **248** may have configurations and/or dimensions that have a greater surface area than the middle flange implants because there is only one implant, rather than two, adjacent to each of the end implants. This may provide and utilize the greater stability and securement available at the end implants **246**, **248** compared to the middle implants **256**. The inferior portion **252** of the superior flange implant **246** may have a right-sided asymmetry that is complementary to the corresponding left-sided asymmetry of the superior portion **258** of the middle implant flange **256**. The inferior portion **260** of the middle flange **256** implant flange may have a right-sided asymmetry that is complementary to the corresponding left-sided asymmetry of the superior portion **254** of the inferior flange implant **248**. The complementary-shaped flanges allow implantation of the superior, middle and inferior flanges at sequential intervertebral spaces that would not otherwise allow implantation of traditionally shaped fixation plates.

Referring to FIGS. **17**A and **17**B, in another embodiment of the invention, more than one middle flange implant is provided. In the particular embodiment shown in FIGS. **17**A and **17**B, the flange of each middle implant **256** is configured similarly, such that the superior portion **258** of each middle flange implant **256** is complementary to the inferior portion **260** of each middle flange implant **256**, as well as the inferior portion **252** of superior flange implant **246**.

In some embodiments of the invention, a fixation system with serial implants of different widths is provided. As shown in FIG. **18**, each implant comprises a left/right complementary configuration as previously described, but implants **256**, **262**, **264** and **266** having different left/right widths are provided. The different widths do not interfere with the complementary configurations of the implants **256**, **262**, **264**, **266** in the fixation system. Having implants with different widths allow the selection of differently dimensioned implants as the size of the vertebrae change along a sequential length of the vertebral column. Furthermore, as illustrated in FIG. **18**, the different widths of implants need not increase or decrease incrementally along the implantation sequence and may also allow tailoring of a particular implant to a particular vertebral anatomy along a sequence of vertebral implants. The differences in width of each implant need not be symmetrical with respect to the left and right sides. Spacers of different left/right widths may also be provided. Spacer size need not correlate with changes in flange size or configuration.

Referring to FIG. **19**, implants **256**, **268**, **270**, **272** of different heights may also be provided in some embodiments to compensate for changes in size of lower vertebrae and/or pathological changes in height. Implants of different heights may also have different widths.

Referring to FIG. **20**, in another embodiment of the invention, each implant **268** of the fixation system has a superior flange portion that is complementary with the inferior flange portion of each implant without particular superior end and inferior end implants.

FIGS. **21** through **23** depict embodiments of the invention where the superior and inferior portions of each implant flange in the fixation system are not complementary in a left/right manner, but each implant flange overall is complementary in a left/right manner. FIG. **21** depicts a three implant fixation system comprising a right-sided superior implant **274**, a left-sided middle implant **276**, and a right-sided inferior implant **278**. FIG. **22** depicts a four implant fixation system comprising a right-sided superior implant **274**, a left-sided middle implant **276**, and a right-sided middle implant **278** and a left-sided inferior implant **278**. In some instances, the left-sided middle implant **276** and right-sided middle implant **278** differs only by a 180-degree rotation. FIG. **23** represents a five implant fixation system comprising a left-sided superior implant **274**, two right-sided middle implants **276**, one left-sided middle implant **278** and a right-sided inferior implant **248**. Likewise, six or more implants may be similarly configured and sequentially implanted.

FIGS. **24** and **25**A and **25**B depict embodiments of the invention where the flange is configured to allow sequential implantation along the vertebral column but the flange and flange holes maintain a left/right symmetry. In one embodiment, it is hypothesized that maintaining left/right symmetry may reduce the torsional strain or stress acting upon the implants relative to the asymmetric implants described elsewhere in this application. Flanges with left/right symmetry, however, are not bound by this theory. FIG. **24** depicts one embodiment of the invention where the upper portions **280**, **282** of the middle and inferior implant flanges **284**, **286** have a bilateral configuration while the inferior portions **288**, **290** of the middle and superior implant flanges **284** have a medial configuration. Although the embodiment shown in FIG. **24** comprises a superior end and inferior end implants **292**, **286**, neither implant **292**, **286** is necessary for the invention.

FIGS. **25**A and **25**B illustrate one embodiment of the invention comprising implants **294**, **296**, **298** with complementary overlapping flange shapes. Here, the superior portions **300**, **302** of the middle and inferior implants **296**, **298** have an anterior configuration while the inferior portions **304**, **306** of the middle and superior implants **296**, **294** have a posterior orientation.

C. Implantation Procedure

In one embodiment of the invention, the patient is intubated and general anesthesia is achieved. The patient is prepped and draped in the usual sterile fashion. An anterior approach to the spine is used to expose the anterior vertebral bodies. Many anterior approaches to the vertebral column are described in various medical texts such as Campbell's Operative Orthopaedics, 10th ed., edited by Canale et al., pp. 1569-1588, herein incorporated by reference. In one embodiment, the upper cervical spine is accessed. The anterior upper cervical spine may by a transoral or retropharyngeal route, or by using a subtotal or extended maxillotomy. In other embodiments,

the lower cervical spine, cervicothoracic junction, thoracic spine, thoracolumbar junction, lumbar region, lumbosacral junction, sacrum or combination of the above regions are accessed.

The intervertebral space is debrided. The flanged interbody implant is optionally packed with natural or artificial bone matrix and/or other osteogenesis factors and inserted into the intervertebral space. The flange is positioned against the anterior cervical vertebral bodies and attached with screws or anchors. The operative site is irrigated with antibiotics and the operative field is sutured closed. The vertebral column is accessed and one or more intervertebral spaces are identified and accessed. In some embodiments, two or more intervertebral spaces are accessed, and in still other embodiments, two or more adjacent intervertebral spaces are accessed. The operative site is rinsed with antibiotic solution and the operative field is closed in layers.

In another embodiment, the invention comprises the steps of providing an intervertebral implant system comprising a first fixation plate and first spacer and a second fixation plate and spacer, wherein the lower portion of the first fixation plate has a complementary shape to a corresponding complementary shape at the upper portion of the second fixation plate.

D. Pivot Plate

In another embodiment of the invention, the interbody spacer and the fixation plate are configured to provide some degree of relative movement between each other. By providing some relative movement between the interbody spacer and fixation plate portions, the device may have improved securement to osseous structures with improved conformance to the existing anatomy at the site of implantation. FIGS. **26**A through **26**D depict one such embodiment, comprising a hinge joint **308** oriented to allow pivoting in the sagittal plane. In other embodiments of the invention, the hinge joint **308** may be oriented to allow pivoting in other planes such as the transverse plane, coronal plane, or any plane in between the three planes. The joint provided between the interbody spacer **114** and the fixation plate **102** may be further configured to limit the range of movement provided. In other embodiments, the configuration of the interbody spacer **114** and/or fixation plate **102** may restrict the relative range of motion between the two components. Recesses in the fixation plate **102** or a size reduction or tapering of the interbody spacer component **114** about the movement joint **308** may allow greater movement. One of skill in the art will understand that the movement joint **308** may be configured to vary other characteristics of the movement joint, including frictional resistance or ratchet-type resistance to movement. Although the hinge joint in FIGS. **26**A to **26**D are depicted in a symmetric position on the interbody space and fixation plate, an eccentric location may be used. Moreover, although a single interbody spacer **114**, fixation plate **102** and movement joint **308** are depicted, other embodiments will have two or more movement joints **308** and wherein either the fixation plate **102** and/or interbody spacer **114** may have a split configuration so that each split component has its own movement joint **308** and can independently move or pivot to provide additional conformance to the existing anatomy. In still other embodiments, the fixation plate **102** and/or interbody spacer **114** may be configured with two or more subcomponents that are provided with an intra-component hinge or movement joint to provide better conformance of the device to the existing anatomy. For example, the fixation plate component of the device may be configured as left and right subcomponents with a hinge joint in between. In another example, the interbody spacer may have superior and inferior subcomponents with a hinge joint therebetween to allow pivoting of the superior and inferior surfaces of the interbody spacer. Depending on the orientation of the hinge joint, the superior and inferior surfaces of the interbody spacer may pivot laterally or in an anterior-posterior direction, or any direction in between.

Although a hinge-type movement joint is depicted in FIGS. **26**A to **26**D, other types of joints or connections between the interbody spacer component and fixation plate are also contemplated, including but not limited to a ball-and-socket joint or one or more metallic cords embedded or attached between the fixation plate and interbody spacer to allow limited polyaxial movement.

E. Alternative Screw Locks

In addition to the embodiments of the screw retaining assemblies described above, other screw retaining assemblies are also contemplated and may be used with the interbody fusion devices previously described. The other screw retaining assemblies described below may also be used with other types of orthopedic and medical devices, as well as non-medical applications, including but not limited to construction, home improvement, consumer appliance, electronic device and other applications.

1. Screw Retainer with Pivot Surface

FIGS. **27** and **28** depict an alternative embodiment of the invention comprising an expandable fastener retaining ring **310** residing partially within an expansion groove **312** of a fastener lumen **112** and partially within the fastener lumen **112** itself. The retaining ring **310** has a reduced configuration and an expanded configuration but is biased to the reduced configuration. The retaining ring **310** has a retaining segment **314** and a pivot segment **316**. Referring to FIG. **28**, the retaining segment **314** has an enlarged outer diameter that is adapted to fit in an expansion groove **312**. In the expanded configuration of the retaining ring **310**, the retaining segment **314** further expands into the expansion groove **312**, thereby increasing the inner diameter **318** of the retaining segment **314**. The inner diameter **318** of the retaining segment **318** has a sloped inner surface **320** that narrows from the proximal opening **322** of the retaining ring **310**. The sloped surface **320** facilitates expansion of the retaining segment **314** as a fastener **158** is inserted through it. Once the fastener head **160** has passed through the retaining segment **314** of the retaining ring **310**, the inner diameter **324** of the polyaxial segment **316** of the retaining ring **310** is larger, allowing the fastener head **160** to reside in the retaining ring **310** without exerting an expansion force against the retaining ring **310**. This allows the retaining ring **310** to at least partially, if not completely, revert back to its reduced configuration. If backout forces are exerted on the fastener head **160**, the fastener head **160** will abut a generally perpendicular retaining surface **232** located at the transition from the inner diameters **318**, **324** of the retaining and polyaxial segments **314**, **316** of the ring **310** and will resist fastener head **160** backout.

The polyaxial segment **316** of the retaining ring **310** comprises a sloping reduced diameter **326** towards the distal opening **328** of the retaining ring **310**, such that the smallest diameter of the polyaxial segment **316** is smaller than the largest diameter of the fastener head **160** and prevents or resists the fastener head **160** from passing completely through the retaining ring **310**. The slope of the cross-section through the retaining ring may be linear, curved, toothed or jagged or any other sloped surface.

2. Fastener Head Embedded Expansion Lock

In another embodiment of the invention, illustrated in FIGS. **29**A and **29**B, the fastener **330** comprises a secondary screw **332** and screw lumen **334** within the fastener head **336**. An expandable ring **338** or disc, having a reduced and an expanded configuration, is provided within a groove **340**

about the fastener head **336**, with the expandable ring or disc biased to the reduced configuration. The groove **340** is contiguous with screw lumen **334** of the fastener head **336** at one or more openings **342**, such that the portion **344** of the inner surface **346** of the expandable ring **338** or disc partially protrudes into the screw lumen **334** when the expandable ring **338** or disc is in the reduced configuration. The secondary screw **332** of the fastener **330** has an expansion section, typically the head **348** of the secondary screw **332**, which has an outer diameter **350** that is greater than the distance **352** within the screw lumen **334** where the expansion ring **338** or disc protrudes into the screw lumen **334**. When the expansion section **348** of the secondary screw **332** is not in contact with the inner protruding portions **344** of the expandable ring **338** or disc, the expandable ring **338** or disc is able to remain in the reduced configuration. When the expansion section **348** of the secondary screw **332** is fully positioned against the protruding portions **344** of the expandable ring **338** or disc, it acts against the expandable ring **338** or disc and causes the expandable ring **338** or disc to enlarge to its expanded configuration. In the expanded configuration, the outer diameter **354** of the expandable ring **338** or disc is greater than the largest outer diameter of the remaining portions of the fastener **330**. In the reduced configuration, the outer diameter of expandable ring or disc may or may not radially extend from out of the groove.

Referring to FIG. **37**, the fastener **330** is preferably used in devices having one or more fastener lumens **356** with a proximal diameter **358**, middle diameter **360** and distal diameter **362**, wherein the proximal diameter **358** is greater than the distal diameter **362** but less than the middle diameter **360**, and wherein the proximal diameter **358** is less than the outer diameter **364** of the expandable ring **354** or disc in the reduced configuration. The outer diameter of the expandable ring **338** or disc, in the expanded configuration, is larger than the proximal diameter **358** of the fastener lumen **356**, thereby preventing or resisting backout of the fastener **330**. In other embodiments, as shown in FIG. **29**A, the screw lumen may be lined by an hole insert **366** having a similar relationship of its proximal, middle and distal diameters. A hole insert **366** may be preferred, for example, when the orthopedic device utilizing the fastener system comprises a material that may exhibit wear from the metallic fasteners. A hole insert **366** may be provided to protect against such wear.

Referring again to FIG. **29**A, the screw lumen **334** of the fastener **330** typically but is not required to extend distally from the openings **342** contiguous with the fastener head groove **340** to allow the secondary screw **332** to completely reside within the screw lumen **334** in a position distal to the screw lumen openings **342** and inner protrusions **344** of the expandable ring **338** or disc. This allows the fastener **330** to be attached to the desired structure without having to later insert the secondary screw **332** into the fastener **330** to enlarge the expandable ring **338** or disc. Instead, once the fastener **330** is attached to the desired structure, the secondary screw **332** need only be moved proximally in the screw lumen **334** to act against the expandable ring **338** or disc and enlarge the expandable ring **338** or disc to its expanded configuration and to retain the fastener in place. By allowing the attachment of the fastener **330** with the secondary screw **332** already in place, the use of fastener **330** in cramped or limited access areas, such as the attachment of a cervical fusion plate or interbody fusion device, need not attempt to maintain a tiny secondary screw **332** on the end of an attachment device while attempting to align the tiny secondary screw **332** with the screw lumen **334** of the fastener head. The user of the fastener **330** only has to align the screwdriver of the secondary screw to the secondary screw in order to manipulate it.

3. Side-Biased Screwhead Lock

In another embodiment of the invention, the screw retaining assembly comprises a biased blocking body residing in an access space about a fastener lumen. Referring to FIGS. **30**A and **30**B, the blocking body **368** comprises a structure with a fixed opening **370** sized to allow passage of a fastener **158**. The blocking body **368** further comprises one or more bias members **372** that are biased to an uncompressed configuration in FIG. **30**A, but wherein the bias may be overcome to move the bias members **372** to a compressed configuration as in FIG. **30**B. FIG. **31** illustrates the blocking body **368** in FIGS. **30**A and **30**B located about a fastener lumen **112** in the uncompressed configuration. In FIGS. **32**A to **32**C, the blocking body **368** has a first position within an access space **374** that allows passage of a fastener body **162** through the opening **370** in the blocking body **368**. The opening **370** of the blocking body **368** preferably has a narrowing sloped surface **376** from its proximal face **378** toward its distal face **380** to facilitate the displacement of the blocking body **368** to its compressed configuration as the fastener head **160** is inserted into the opening **370** of the blocking body **368**. FIGS. **33**A to **33**C illustrate a second position of the blocking body **368** within the access space **374** that prevents or resists passage of the fastener head **160** past the blocking body **368**.

Although the embodiments of the invention depicted in FIGS. **30**A to **33**C illustrate a blocking body **368** comprising a generally looped structure, one of skill in the art will understand that only a portion of the loop serves a blocking function, and therefore, in other embodiments of the invention, the blocking body may be a partial loop, or any other shaped structure configured to protrude into the fastener lumen **112** or passageway in an uncompressed configuration and not protrude into the fastener lumen **112** or passageway in the compressed configuration. The blocking body **368** need not be curved or looped. Furthermore, although the bias members **372** depicted FIGS. **30**A to **33**C are attached to the blocking body **368**, one of skill in the art will understand that the bias structures used to bias the blocking body to its second position need not be attached to the blocking body. Instead, the bias structures may be attached to one of more surfaces of the access space, or reside in the access space but is not attached to any structure. For example, the access space may contain a separate blocking body and bias structure, such as a helical or leaf spring, that exerts an expansion force between a surface of the access space and blocking body to bias the blocking body in the second position.

4. Lock Plate

In another embodiment of the invention, some embodiments of the flanged interbody fusion device **382** may comprise locking plates **384** that may be attached to the fixation plate **102** to overlie at least portion of one or more bone screws **158** or fastener heads **160** to prevent or resist backout. FIGS. **34**A and **34**B represent one embodiment of the invention with an X-shaped locking plate **384** attachable to the fixation plate **102** using a fastener **386**. Other locking plate configurations may also be used, depending on the particular arrangement and number of the bone screws used to fasten the device to the bone. As shown in FIG. **34**B, the locking plate **384** may comprise one or more alignment structures **388** that prevent the locking plate **384** from spinning as the fastener **386**, typically a screw, is rotated to engage the locking plate **384** to the fixation plate **102**. The alignment structures typically but not necessarily will interface with complementary structures on the fixation plate **102**. In other embodiments, a

fastener may not be required as the alignment structures or other portions of the fastener may form a snap fit with the fixation plate **102**.

As depicted in FIGS. **35**A and **35**B, more than one locking plate **390** may be used. As shown in FIGS. **36**A and **36**B, the locking plates **392** may be angled or otherwise shaped for a particular fixation plate configuration.

F. Conclusion

Although the present invention has been described in relation to various exemplary embodiments, various additional embodiments and alterations to the described embodiments are contemplated within the scope of the invention. Thus, no part of the foregoing description should be interpreted to limit the scope of the invention as set forth in the following claims. For all of the embodiments described above, the steps of the methods need not be performed sequentially.

What is claimed is:

1. A method for securing an orthopedic device to a bone, comprising:

providing an orthopedic device comprising a fastener lumen and a fastener, the fastener comprising a fastener head and a fastener body, the fastener head comprising a lumen opening, a central internal lumen having a distal end and a proximal end, the lumen opening disposed at the proximal end, a side lumen contiguous with the central internal lumen and a separate expansion member located at least partially within the side lumen and the central internal lumen and having an expanded configuration and a reduced configuration, and an internal screw comprising a screw body with threads and a screw head having an angled edge, located within the central internal lumen, wherein substantially the entire internal screw is positioned distally of the expansion member; attaching the orthopedic device to a bone in a body;

moving the internal screw proximally to a position about the side lumen wherein the angled edge of the internal screw acts upon an edge of the expansion member;

wherein moving the internal screw proximally comprises the internal screw directly contacting the expansion member

partially displacing the expansion member with respect to the side lumen; and

changing the expansion member to its expanded configuration.

2. The method for securing an orthopedic device to a bone as in claim **1**, wherein the fastener lumen comprises a middle diameter and a proximal diameter, where the proximal diameter is less than the middle diameter.

3. The method for securing an orthopedic device to a bone as in claim **2**, wherein the reduced configuration of the expansion member has a diameter less than the proximal diameter and the expanded configuration of the expansion member has a diameter between the proximal diameter and the middle diameter.

4. The method for securing an orthopedic device to a bone as in claim **1**, wherein attaching the orthopedic device to a bone in a body comprises:

inserting the fastener into the fastener lumen; and

inserting the fastener into the bone of the body.

5. The method for securing an orthopedic device to a bone as in claim **1**, wherein the orthopedic device is an interbody spacer.

6. The method for securing an orthopedic device to a bone as in claim **5**, wherein the interbody spacer is a flanged interbody spacer.

7. The method for securing an orthopedic device to a bone as in claim **1**, wherein the orthopedic device is a fixation plate.

8. The method for securing an orthopedic device to a bone as in claim **7**, wherein the orthopedic device is a vertebral fixation plate.

9. The method for securing an orthopedic device to a bone as in claim **8**, wherein the vertebral fixation plate is an anterior cervical fixation plate.

10. A method for securing an orthopedic device to a vertebral body, comprising:

providing an orthopedic device comprising a fastener lumen and a fastener, the fastener comprising a fastener head and a fastener body, the fastener head comprising a lumen opening, a central internal lumen having a distal end and a proximal end, the lumen opening disposed at the proximal end, a side lumen contiguous with the central internal lumen and a separate expansion member located at least partially within the side lumen and the central internal lumen and having an expanded configuration and a reduced configuration, and an internal screw comprising a screw body with threads and a screw head having an angled edge, located within the central internal lumen, wherein substantially the entire

internal screw is positioned distally of the expansion member; attaching the device to an object;

moving the internal screw proximally to a position about the side lumen wherein the angled edge of the internal screw acts upon an edge of the expansion member;

wherein moving the internal screw proximally comprises the internal screw directly contacting the expansion member; and

partially displacing the expansion member with respect to the side lumen; and

changing the expansion member to its expanded configuration.

11. The method for securing an orthopedic device to a vertebral body as in claim **10**, wherein the fastener lumen comprises a middle diameter and a proximal diameter, where the proximal diameter is less than the middle diameter.

12. The method for securing an orthopedic device to a vertebral body as in claim **11**, wherein the reduced configuration of the expansion member has a diameter less than the proximal diameter and the expanded configuration of the expansion member has a diameter between the proximal diameter and the middle diameter.

13. The method for securing an orthopedic device to a vertebral body as in claim **10**, wherein attaching the device to the object comprises:

inserting the fastener into the fastener lumen; and

inserting the fastener into the object.

14. The method for securing an orthopedic device to a bone as in claim **1**, wherein the internal screw is moved proximally by rotating the internal screw to unthread the internal screw from the central internal lumen.

15. The method for securing an orthopedic device to a vertebral body as in claim **10**, wherein the internal screw is moved proximally by rotating the internal screw to unthread the internal screw from the central internal lumen.

* * * * *