US008460385B1

(12) **United States Patent**
Wensel

(10) **Patent No.: US 8,460,385 B1**
(45) **Date of Patent: Jun. 11, 2013**

(54) **FUSION MEMBER FOR INSERTION BETWEEN VERTEBRAL BODIES**

(75) Inventor: **Jeffrey Paris Wensel**, Eugene, OR (US)

(73) Assignee: **Spinelogik, Inc.**, Eugene, OR (US)

(*) Notice: Subject to any disclaimer, the term of this patent is extended or adjusted under 35 U.S.C. 154(b) by 404 days.

(21) Appl. No.: **12/705,972**

(22) Filed: **Feb. 15, 2010**

Related U.S. Application Data

(63) Continuation of application No. 12/383,950, filed on Mar. 27, 2009, now Pat. No. 8,382,839, and a continuation-in-part of application No. 12/113,362, filed on May 1, 2008, now Pat. No. 8,313,528.

(60) Provisional application No. 61/040,136, filed on Mar. 27, 2008, provisional application No. 61/109,175, filed on Oct. 28, 2008, provisional application No. 61/148,036, filed on Jan. 28, 2009, provisional application No. 61/040,136, filed on Mar. 27, 2008, provisional application No. 61/211,484, filed on Mar. 27, 2009.

(51) **Int. Cl.**
A61F 2/44 (2006.01)

(52) **U.S. Cl.**
USPC **623/17.16**; 623/17.11; 623/17.15

(58) **Field of Classification Search**
USPC 623/17.11, 17.15, 17.16
See application file for complete search history.

(56) **References Cited**

U.S. PATENT DOCUMENTS

4,554,914	A *	11/1985	Kapp et al.	606/86 A
D312,309	S	11/1990	Michelson	
5,015,247	A	5/1991	Michelson	
5,314,477	A *	5/1994	Marnay	623/17.15
5,397,364	A	3/1995	Kozak et al.	
5,484,437	A	1/1996	Michelson	
5,505,732	A	4/1996	Michelson	
5,522,899	A	6/1996	Michelson	
D377,095	S	12/1996	Michelson	
D377,096	S	12/1996	Michelson	
D377,527	S	1/1997	Michelson	
5,593,409	A	1/1997	Michelson	
5,609,635	A	3/1997	Michelson	
5,653,761	A	8/1997	Pisharodi	

(Continued)

FOREIGN PATENT DOCUMENTS

DE	19944681	A1 *	1/2001
DE	19944681		3/2001
SU	2004218		12/1993

OTHER PUBLICATIONS

Updated portions of prosecution history of U.S. Appl. No. 12/113,362, mailed Jul. 12, 2012, Wensel, Jeffrey Paris.

(Continued)

Primary Examiner — Thomas J Sweet
Assistant Examiner — Seema Mathew
(74) *Attorney, Agent, or Firm* — Adeli & Tollen LLP

(57) **ABSTRACT**

Some embodiments of the invention provide an apparatus that (1) delivers a fusion member between two vertebral bodies after at least a portion of the fibrocartilaginous disc between the vertebral bodies has been removed, and (2) affixes the fusion member to the vertebral bodies. In some embodiments, the apparatus includes (1) a fusion member that is delivered and positioned between the vertebral bodies, (2) a delivery mechanism that delivers and positions the fusion member between the vertebral bodies, and (3) an anchoring member that affixes the fusion member to the vertebral bodies.

13 Claims, 76 Drawing Sheets

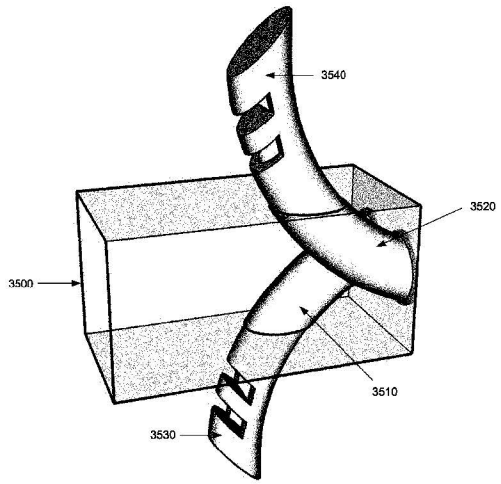

GLOBUS EX. 1001

U.S. PATENT DOCUMENTS

D392,387	S	3/1998	Michelson	
5,741,253	A	4/1998	Michelson	
5,772,661	A	6/1998	Michelson	
5,776,199	A	7/1998	Michelson	
5,785,710	A	7/1998	Michelson	
5,797,909	A	8/1998	Michelson	
5,860,973	A	1/1999	Michelson	
D425,989	S	5/2000	Michelson	
6,080,155	A	6/2000	Michelson	
6,096,038	A	8/2000	Michelson	
6,120,502	A	9/2000	Michelson	
6,120,503	A	9/2000	Michelson	
6,123,705	A	9/2000	Michelson	
6,136,001	A	10/2000	Michelson	
6,139,551	A	10/2000	Michelson	
6,149,650	A	11/2000	Michelson	
RE37,005	E	12/2000	Michelson	
6,159,215	A	12/2000	Urbahns et al.	
6,190,388	B1	2/2001	Michelson	
6,210,412	B1	4/2001	Michelson	
RE37,161	E	5/2001	Michelson	
6,224,595	B1	5/2001	Michelson	
6,224,607	B1	5/2001	Michelson	
6,241,770	B1	6/2001	Michelson	
6,264,656	B1	7/2001	Michelson	
6,270,498	B1	8/2001	Michelson	
6,302,914	B1	10/2001	Michelson	
6,315,795	B1	11/2001	Scarborough et al.	
6,350,283	B1	2/2002	Michelson	
6,436,098	B1	8/2002	Michelson	
6,447,544	B1	9/2002	Michelson	
6,447,547	B1	9/2002	Michelson	
6,468,276	B1	10/2002	McKay	
6,478,823	B1	11/2002	Michelson	
6,485,517	B1	11/2002	Michelson	
6,500,205	B1	12/2002	Michelson	
6,537,320	B1	3/2003	Michelson	
6,554,836	B2	4/2003	Michelson	
6,558,423	B1	5/2003	Michelson	
6,565,574	B2	5/2003	Michelson	
6,582,432	B1	6/2003	Michelson	
6,605,089	B1	8/2003	Michelson	
6,652,584	B2	11/2003	Michelson	
6,666,890	B2	12/2003	Michelson	
6,709,458	B2	3/2004	Michelson	
6,716,247	B2	4/2004	Michelson	
6,730,127	B2	5/2004	Michelson	
6,733,535	B2	5/2004	Michelson	
6,749,636	B2	6/2004	Michelson	
6,758,849	B1	7/2004	Michelson	
6,767,367	B1	7/2004	Michelson	
6,770,074	B2	8/2004	Michelson	
6,793,679	B2	9/2004	Michelson	
6,808,537	B2	10/2004	Michelson	
6,814,756	B1	11/2004	Michelson	
6,827,740	B1	12/2004	Michelson	
6,849,093	B2	2/2005	Michelson	
6,875,213	B2	4/2005	Michelson	
6,890,355	B2	5/2005	Michelson	
6,923,810	B1	8/2005	Michelson	
6,923,830	B2	8/2005	Michelson	
6,962,606	B2	11/2005	Michelson	
6,972,019	B2	12/2005	Michelson	
6,972,035	B2	12/2005	Michelson	
6,981,975	B2	1/2006	Michelson	
6,989,031	B2	1/2006	Michelson	
7,008,453	B1	3/2006	Michelson	
7,022,137	B2	4/2006	Michelson	
7,033,394	B2	4/2006	Michelson	
7,041,135	B2	5/2006	Michelson	
7,051,417	B2	5/2006	Michelson	
7,056,342	B2	6/2006	Michelson	
7,063,701	B2	6/2006	Michelson	
7,063,702	B2	6/2006	Michelson	
7,066,961	B2	6/2006	Michelson	
7,094,239	B1	8/2006	Michelson	
7,112,206	B2	9/2006	Michelson	
7,115,128	B2	10/2006	Michelson	
7,115,143	B1	10/2006	Michelson	
7,118,579	B2	10/2006	Michelson	
7,118,598	B2	10/2006	Michelson	
7,128,760	B2	10/2006	Michelson	
7,156,875	B2	1/2007	Michelson	
7,163,561	B2	1/2007	Michelson	
7,166,107	B2	1/2007	Anderson	
7,166,129	B2	1/2007	Michelson	
7,195,643	B2	3/2007	Jackson	
7,207,991	B2	4/2007	Michelson	
7,244,275	B2	7/2007	Michelson	
7,255,698	B2	8/2007	Michelson	
7,255,713	B2 *	8/2007	Malek	623/17.12
7,264,622	B2	9/2007	Michelson	
7,288,093	B2	10/2007	Michelson	
7,291,149	B1	11/2007	Michelson	
7,320,686	B2	1/2008	Serhan et al.	
7,326,214	B2	2/2008	Michelson	
7,326,248	B2	2/2008	Michelson	
7,354,442	B2	4/2008	Sasso et al.	
7,387,643	B2	6/2008	Michelson	
7,396,365	B2	7/2008	Michelson	
7,399,303	B2	7/2008	Michelson	
7,410,501	B2	8/2008	Michelson	
7,431,722	B1	10/2008	Michelson	
7,435,262	B2	10/2008	Michelson	
7,442,209	B2	10/2008	Michelson	
7,445,636	B2	11/2008	Michelson	
7,452,359	B1	11/2008	Michelson	
7,455,672	B2	11/2008	Michelson	
7,455,692	B2	11/2008	Michelson	
7,462,195	B1	12/2008	Michelson	
7,491,205	B1	2/2009	Michelson	
7,503,933	B2	3/2009	Michelson	
7,534,254	B1	5/2009	Michelson	
7,540,882	B2	6/2009	Michelson	
7,569,054	B2	8/2009	Michelson	
7,608,107	B2	10/2009	Michelson	
7,611,536	B2	11/2009	Michelson	
7,618,423	B1	11/2009	Valentine et al.	
7,637,951	B2	12/2009	Michelson	
7,637,954	B2	12/2009	Michelson	
7,655,027	B2	2/2010	Michelson	
7,662,184	B2	2/2010	Edwards et al.	
7,686,805	B2	3/2010	Michelson	
7,691,148	B2	4/2010	Michelson	
7,722,619	B2	5/2010	Michelson	
7,771,475	B2	8/2010	Michelson	
7,789,914	B2	9/2010	Michelson	
7,794,502	B2	9/2010	Michelson	
7,828,800	B2	11/2010	Michelson	
7,887,565	B2	2/2011	Michelson	
7,892,286	B2	2/2011	Michelson	
7,914,530	B2	3/2011	Michelson	
7,914,554	B2	3/2011	Michelson	
7,922,729	B2	4/2011	Michelson	
7,931,840	B2	4/2011	Michelson	
7,935,116	B2	5/2011	Michelson	
7,935,149	B2	5/2011	Michelson	
7,942,933	B2	5/2011	Michelson	
7,972,365	B2	7/2011	Michelson	
7,972,381	B2	7/2011	Michelson	
7,976,566	B2	7/2011	Michelson	
2002/0099378	A1	7/2002	Michelson	
2003/0187436	A1	10/2003	Bolger et al.	
2003/0191371	A1	10/2003	Smith et al.	
2004/0010316	A1	1/2004	William et al.	
2005/0010294	A1	1/2005	Michelson	
2005/0065519	A1	3/2005	Michelson	
2005/0065607	A1	3/2005	Gross	
2005/0070913	A1	3/2005	Milbocker et al.	
2005/0137707	A1	6/2005	Malek	
2005/0283246	A1	12/2005	Cauthen, III et al.	
2006/0009850	A1 *	1/2006	Frigg et al.	623/17.13
2006/0036322	A1	2/2006	Reiley	
2006/0079961	A1 *	4/2006	Michelson	623/17.11
2006/0106460	A1 *	5/2006	Messerli et al.	623/17.11
2006/0122623	A1	6/2006	Truckai et al.	
2007/0043441	A1 *	2/2007	Pisharodi	623/17.11

2007/0050030	A1*	3/2007	Kim	623/17.11
2007/0055376	A1	3/2007	Michelson	
2007/0219635	A1*	9/2007	Mathieu et al.	623/17.16
2007/0225813	A1	9/2007	Haines	
2008/0015694	A1*	1/2008	Tribus	623/17.11
2008/0065215	A1*	3/2008	Reiley	623/17.11
2008/0221695	A1	9/2008	Jacofsky et al.	
2008/0281428	A1	11/2008	Meyers et al.	
2009/0138015	A1*	5/2009	Conner et al.	606/80
2009/0149959	A1	6/2009	Conner et al.	
2009/0164020	A1*	6/2009	Janowski et al.	623/17.16
2009/0265007	A1	10/2009	Colleran	
2009/0292316	A1	11/2009	Hess	
2010/0114317	A1	5/2010	Lambrecht et al.	
2010/0168861	A1	7/2010	Yundt	
2010/0204796	A1*	8/2010	Bae et al.	623/17.16
2010/0249935	A1	9/2010	Slivka et al.	
2010/0268339	A1*	10/2010	Malinin et al.	623/17.11
2010/0286777	A1*	11/2010	Errico et al.	623/17.11
2011/0166660	A1*	7/2011	Laurence	623/17.16
2011/0196494	A1	8/2011	Yedlicka et al.	
2011/0208311	A1	8/2011	Janowski	

OTHER PUBLICATIONS

Updated portions of prosecution history of U.S. Appl. No. 12/361,525, mailed Jul. 3, 2012 Wensel, Jeffrey Paris.
Updated portions of prosecution history of U.S. Appl. No. 12/705,970, mailed Jul. 11, 2012, Wensel, Jeffrey Paris.
Updated portions of prosecution history of U.S. Appl. No. 12/705,974, mailed Jul. 20, 2012, Wensel, Jeffrey Paris.
Updated portions of prosecution history of U.S. Appl. No. 12/705,978, mailed Jul. 3, 2012, Wensel, Jeffrey Paris.
Updated portions of prosecution history of U.S. Appl. No. 12/113,362, mailed Nov. 10, 2011, Wensel, Jeffrey Paris.
Updated portions of prosecution history of U.S. Appl. No. 12/361,525, mailed Oct. 4, 2011 Wensel, Jeffrey Paris.
Updated portions of prosecution history of U.S. Appl. No. 12/383,950, mailed Oct. 28, 2011, Wensel, Jeffrey Paris.
U.S. Appl. No. 60/916,414, filed May 7, 2007.
Updated portions of prosecution history of U.S. Appl. No. 12/383,950, mailed Jun. 20, 2012, Wensel, Jeffrey Paris.
Updated portions of prosecution history of U.S. Appl. No. 12/705,974, mailed Jun. 19, 2012, Wensel, Jeffrey Paris.
U.S. Appl. No. 12/113,362, filed May 1, 2008, Wensel, Jeffrey Paris.
U.S. Appl. No. 12/361,525, filed Jan. 28, 2009, Wensel, Jeffrey Paris.
U.S. Appl. No. 12/383,950, filed Mar. 27, 2009, Wensel, Jeffrey Paris.
U.S. Appl. No. 12/705,970, filed Feb. 15, 2010, Wensel, Jeffrey Paris.
U.S. Appl. No. 12/705,974, filed Feb. 15, 2010, Wensel, Jeffrey Paris.
U.S. Appl. No. 12/705,978, filed Feb. 15, 2010, Wensel, Jeffrey Paris.
U.S. Appl. No. 13/032,634, filed Feb. 22, 2011, Wensel, Jeffrey Paris.
Portions of prosecution history of U.S. Appl. No. 12/113,362, mailed Mar. 28, 2011, Wensel, Jeffrey Paris.
Portions of prosecution history of U.S. Appl. No. 12/361,525, mailed Jul. 8, 2011, Wensel, Jeffrey Paris.
Portions of prosecution history of U.S. Appl. No. 12/383,950, mailed Jul. 21, 2011, Wensel, Jeffrey Paris.
Portions of prosecution history of U.S. Appl. No. 12/705,970, mailed Jul. 27, 2010, Wensel, Jeffrey Paris.
Portions of prosecution history of U.S. Appl. No. 12/705,974, mailed Jul. 27, 2010, Wensel, Jeffrey Paris.
Portions of prosecution history of U.S. Appl. No. 12/705,978, mailed Jul. 27, 2010, Wensel, Jeffrey Paris.
Updated portions of prosecution history of U.S. Appl. No. 12/361,525, mailed Jun. 14, 2012, Wensel, Jeffrey Paris.
Updated portions of prosecution history of U.S. Appl. No. 12/113,362, mailed Apr. 19, 2012, Wensel, Jeffrey Paris.
Updated portions of prosecution history of U.S. Appl. No. 12/361,525, mailed Feb. 14, 2012, Wensel, Jeffrey Paris.
Updated portions of prosecution history of U.S. Appl. No. 12/705,970, mailed Mar. 22, 2012, Wensel, Jeffrey Paris.
Updated portions of prosecution history of U.S. Appl. No. 12/705,978, mailed Mar. 22, 2012, Wensel, Jeffrey Paris.
U.S. Appl. No. 60/989,100, filed Nov. 19, 2007.
Updated portions of prosecution history of U.S. Appl. No. 12/113,362, mailed Oct. 17, 2012, Wensel, Jeffrey Paris.
Updated portions of prosecution history of U.S. Appl. No. 12/361,525, mailed Oct. 3, 2012, Wensel, Jeffrey Paris.
Updated portions of prosecution history of U.S. Appl. No. 12/383,950, mailed Oct. 12, 2012, Wensel, Jeffrey Paris.
Updated portions of prosecution history of U.S. Appl. No. 12/705,970, mailed Oct. 11, 2012, Wensel, Jeffrey Paris.
Updated portions of prosecution history of U.S. Appl. No. 12/705,974, mailed Oct. 10, 2012, Wensel, Jeffrey Paris.
Updated portions of prosecution history of U.S. Appl. No. 12/705,978, mailed Oct. 3, 2012, Wensel, Jeffrey Paris.
U.S. Appl. No. 13/655,412, filed Oct. 18, 2012, Wensel, Jeffrey Paris.
U.S. Appl. No. 13/663,472, filed Oct. 30, 2012, Wensel, Jeffrey Paris.
U.S. Appl. No. 12/113,362, filed Nov. 20, 2012, Wensel, Jeffrey Paris.
U.S. Appl. No. 12/361,525, filed Dec. 18, 2012, Wensel, Jeffrey Paris.
Updated portions of prosecution history of U.S. Appl. No. 12/361,525, mailed Nov. 14, 2012, Wensel, Jeffrey Paris.
Updated portions of prosecution history of U.S. Appl. No. 12/383,950, mailed Jan. 14, 2013, Wensel, Jeffrey Paris.
Updated portions of prosecution history of U.S. Appl. No. 12/705,970, mailed Dec. 13, 2012, Wensel, Jeffrey Paris.
Updated portions of prosecution history of U.S. Appl. No. 12/705,974, mailed Dec. 17, 2012, Wensel, Jeffrey Paris.
Portions of prosecution history of U.S. Appl. No. 13/032,634, mailed Dec. 5, 2012, Wensel, Jeffrey Paris.

* cited by examiner

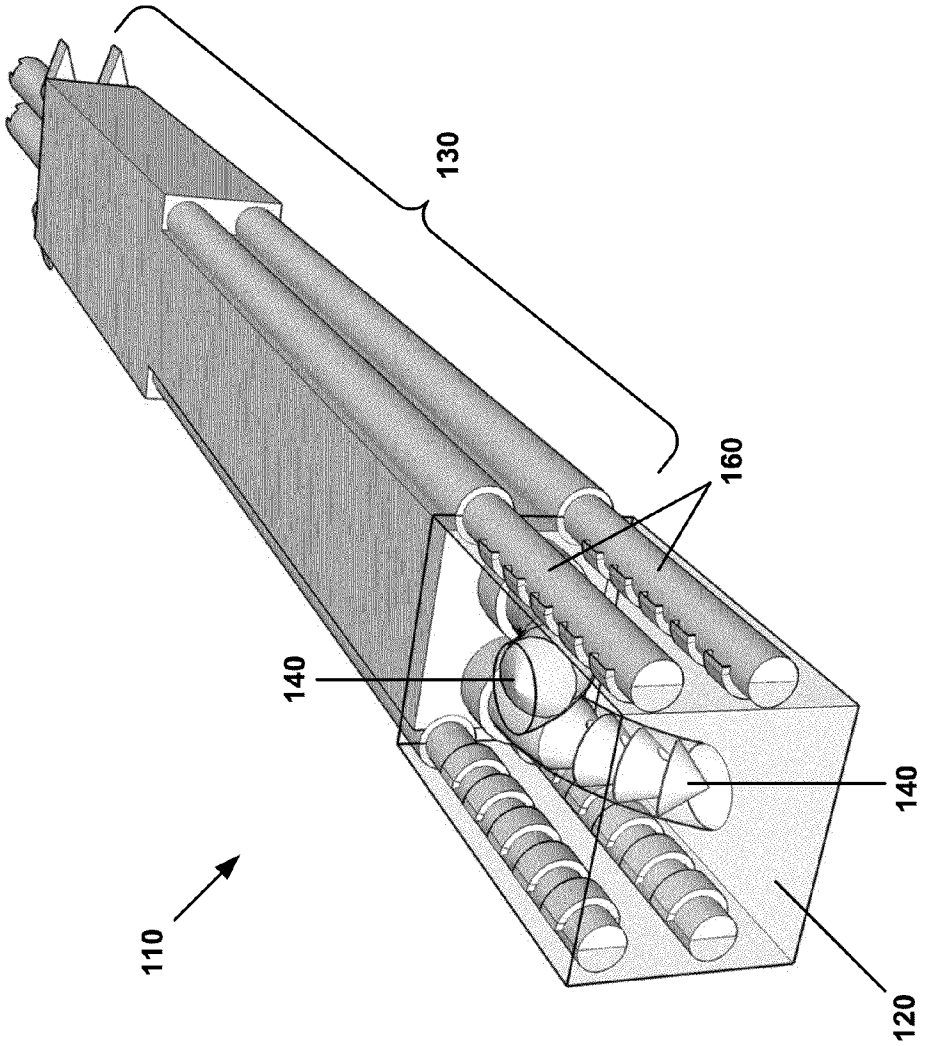

Figure 1A

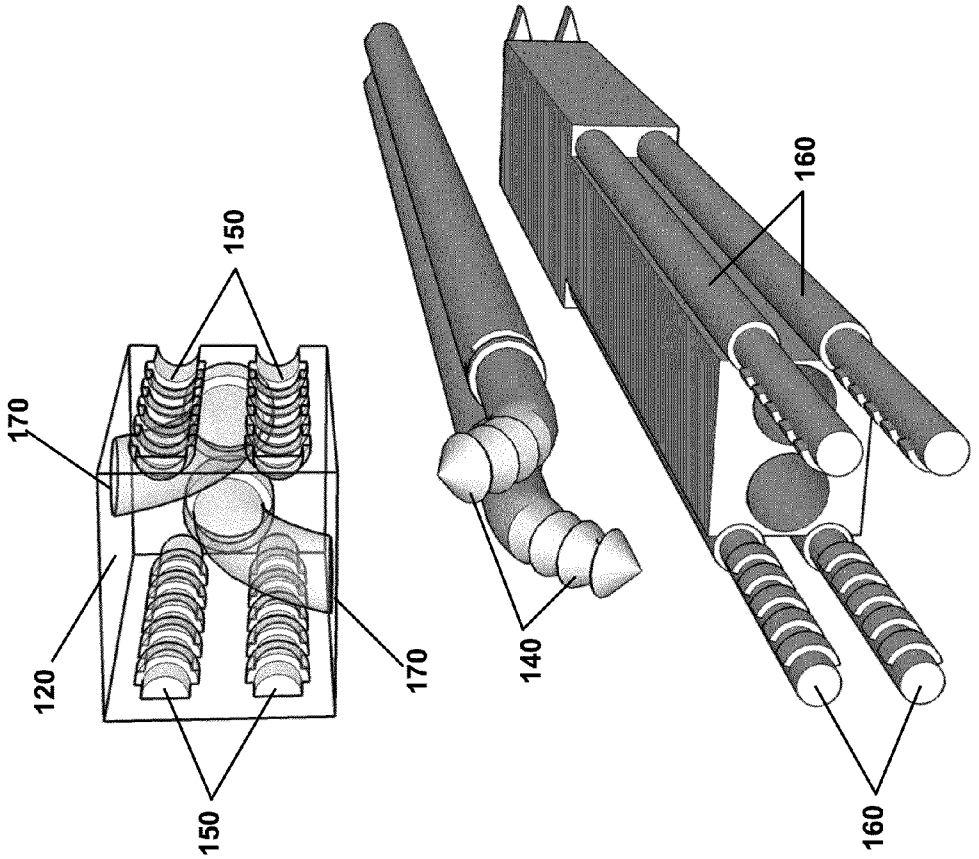

Figure 1B

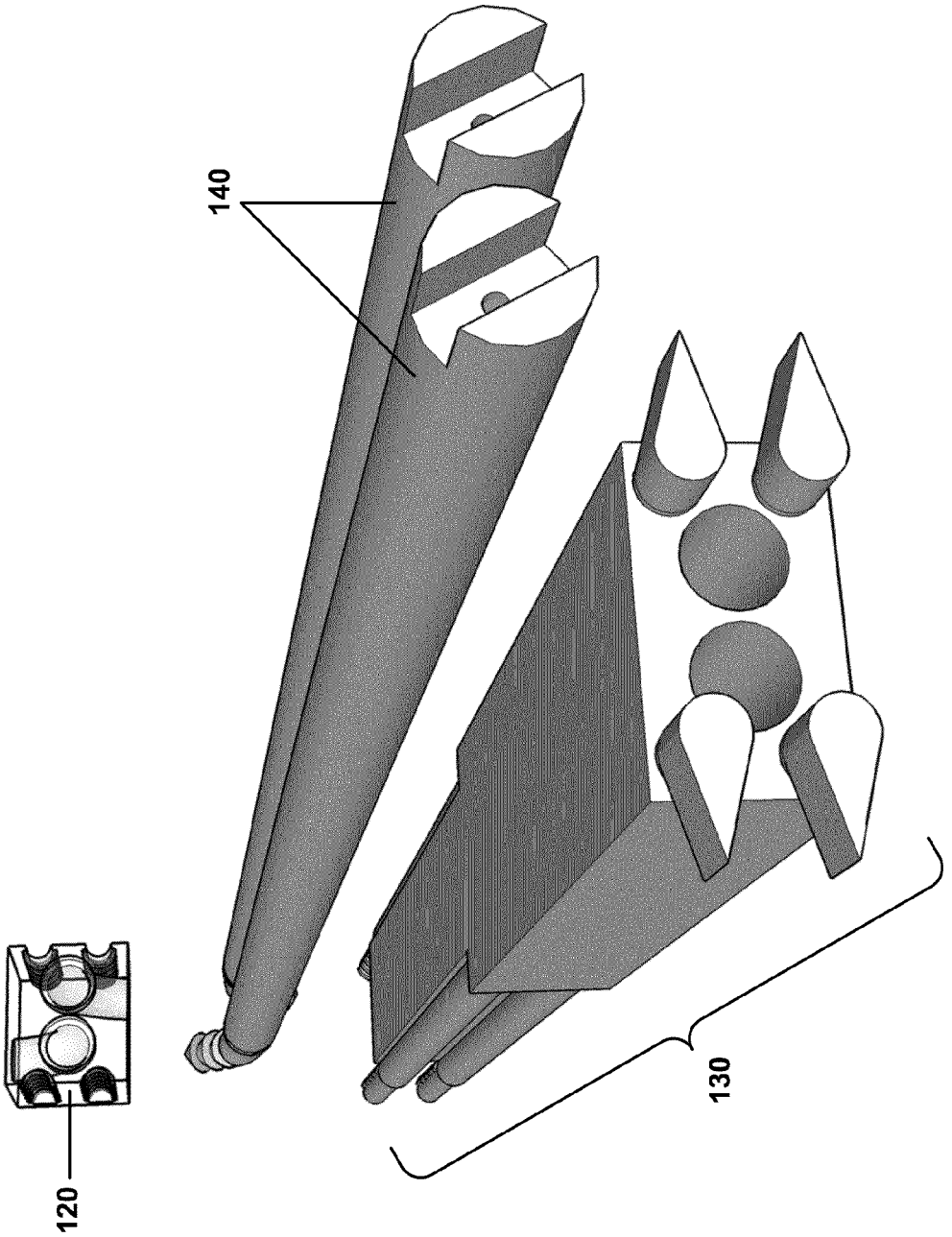

Figure 1C

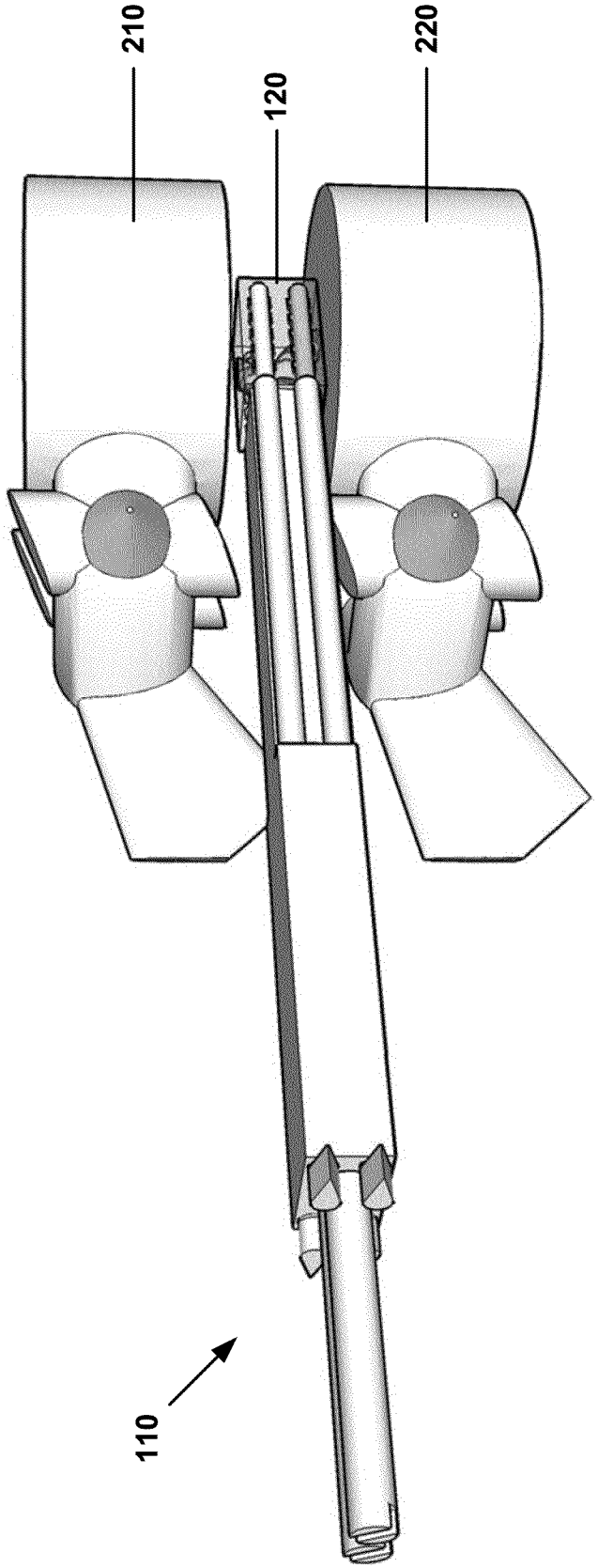

Figure 2

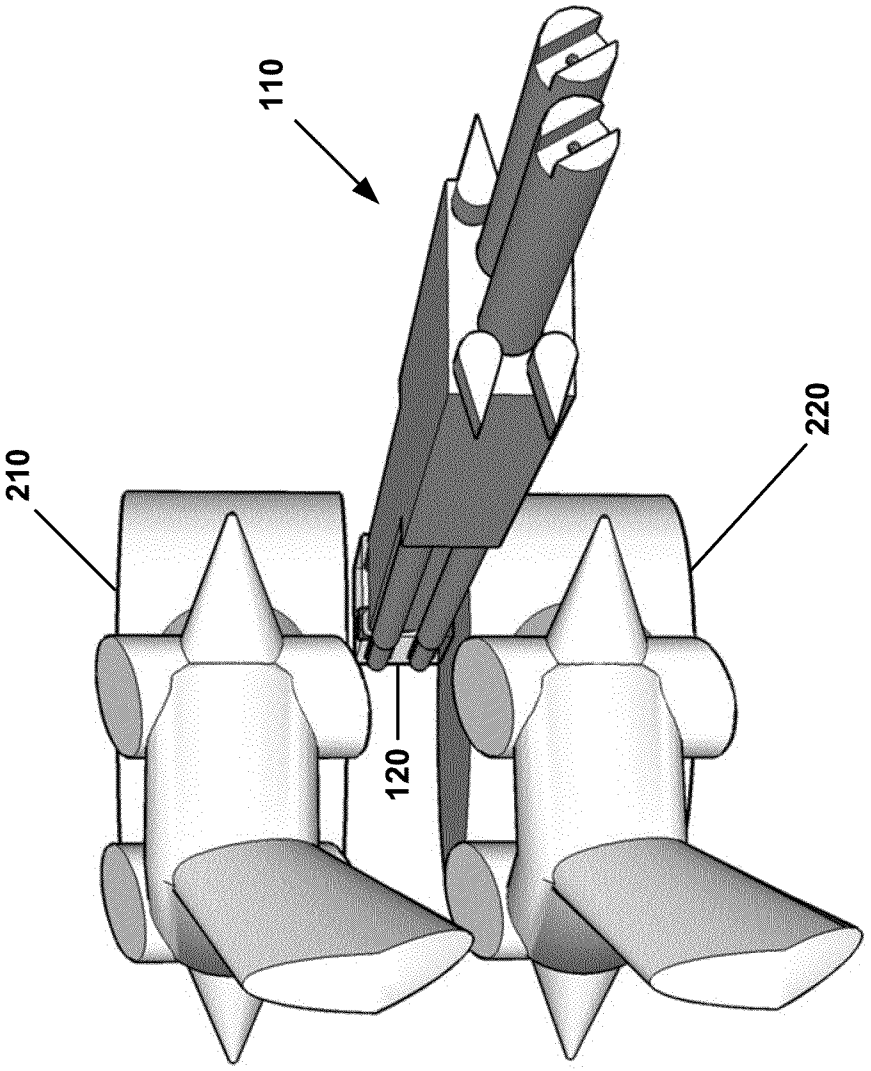

Figure 3

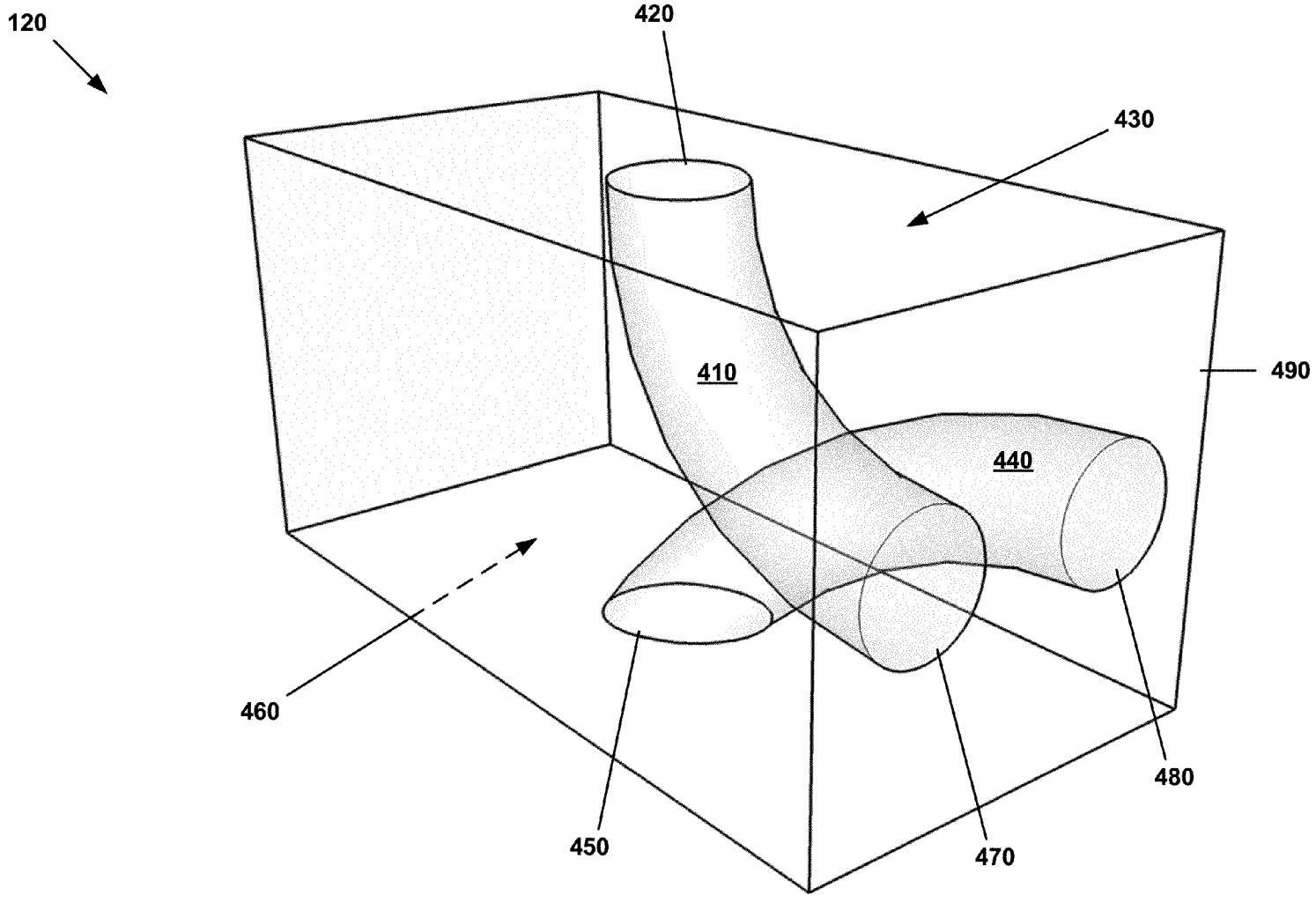

Figure 4

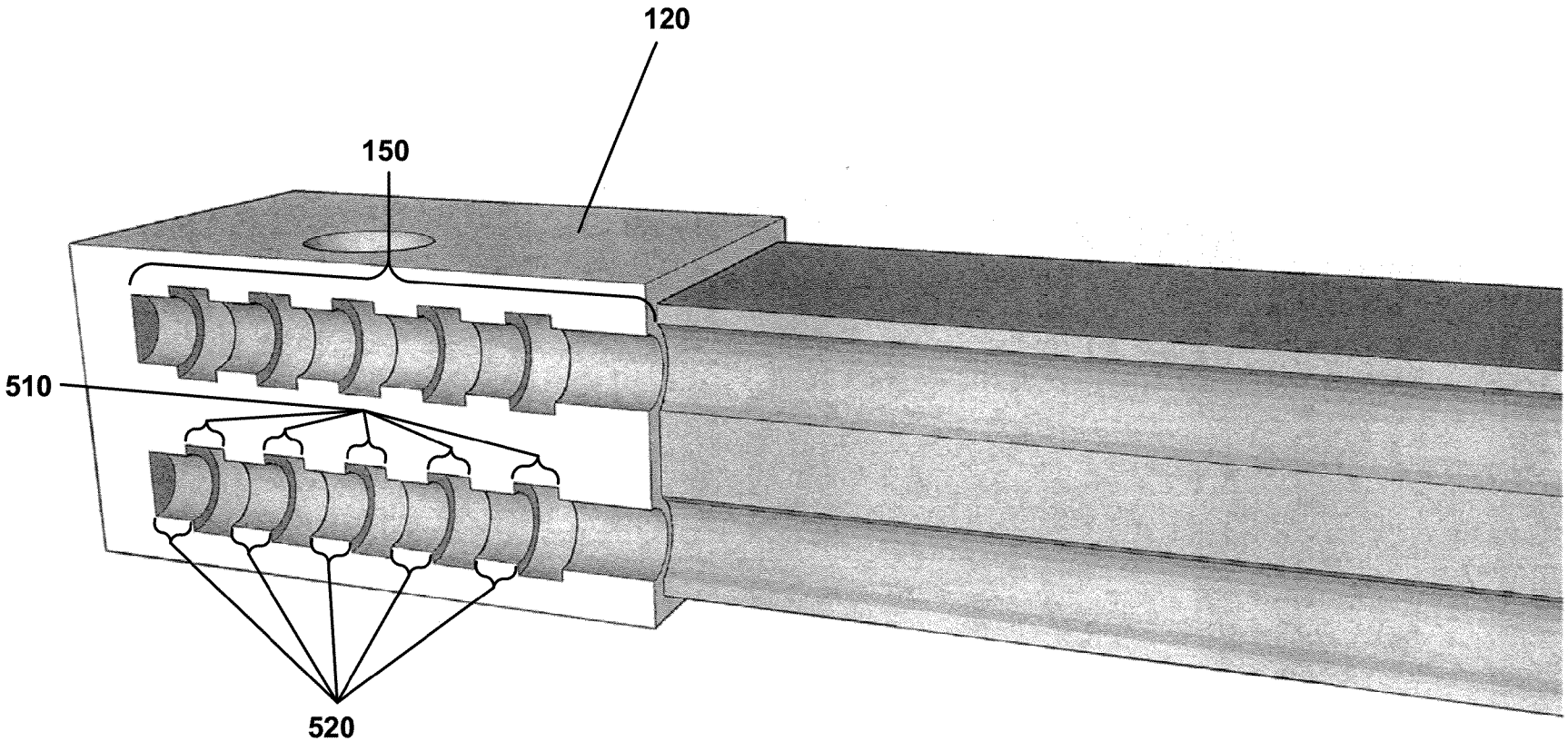

Figure 5A

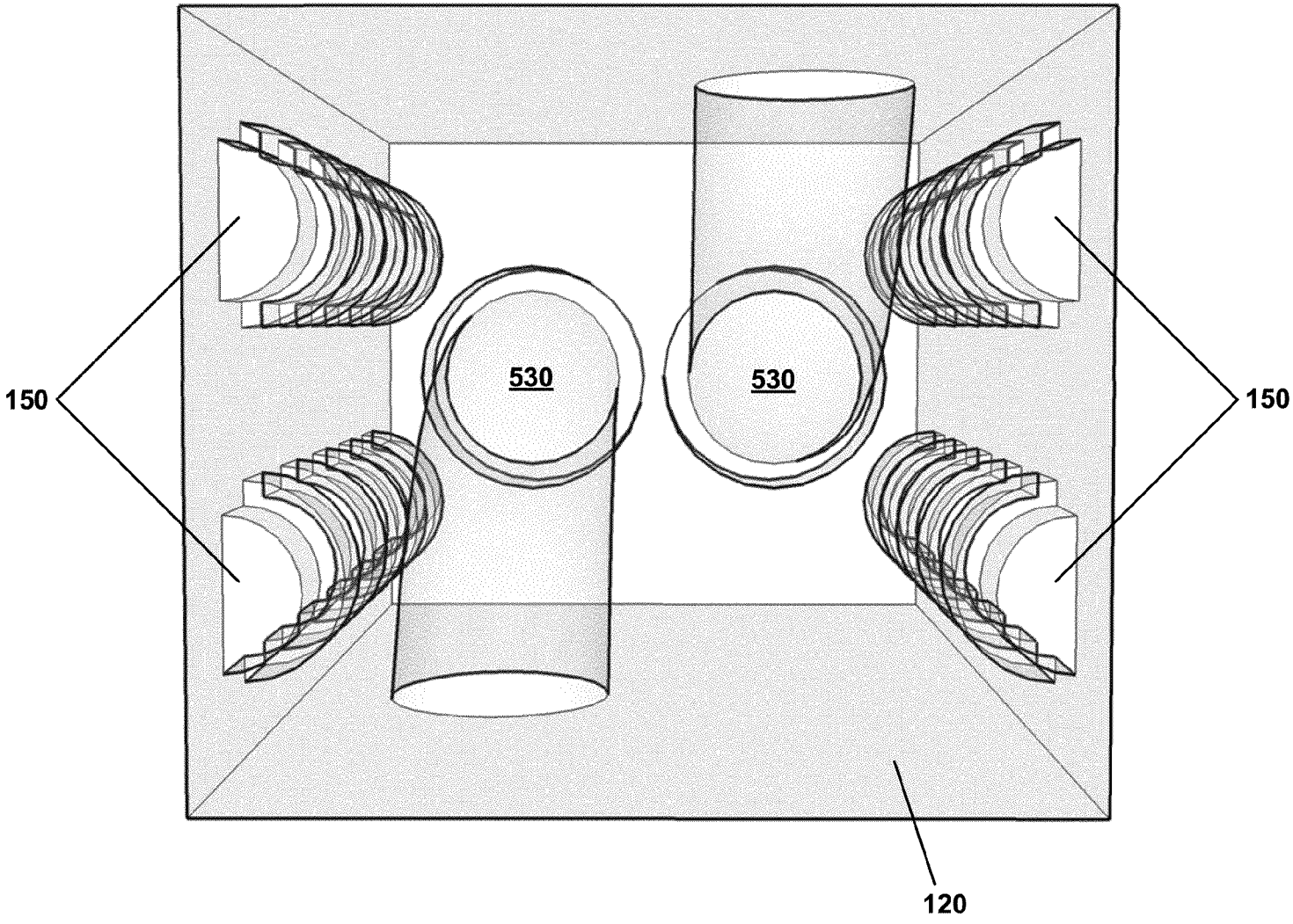

Figure 5B

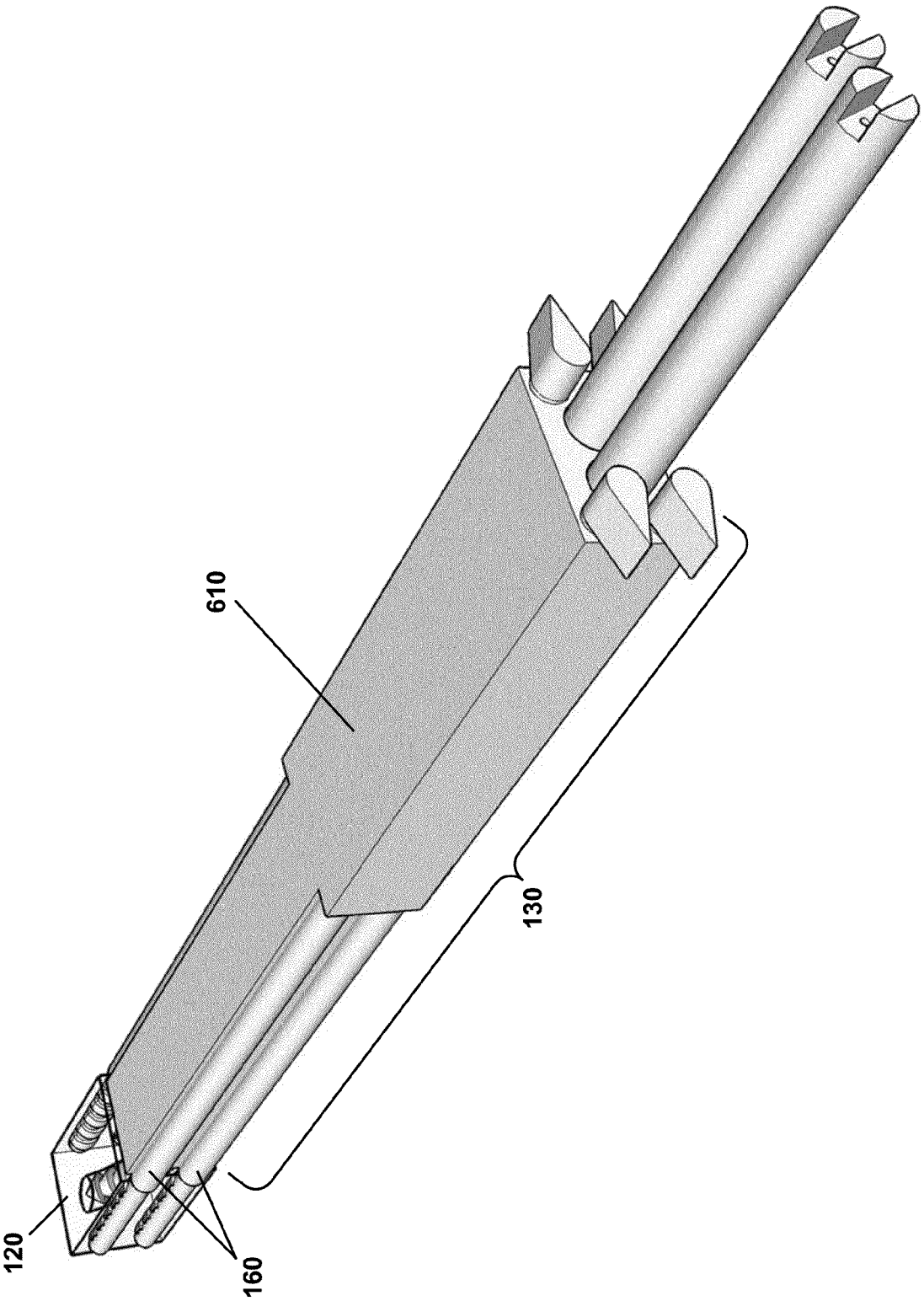

Figure 6

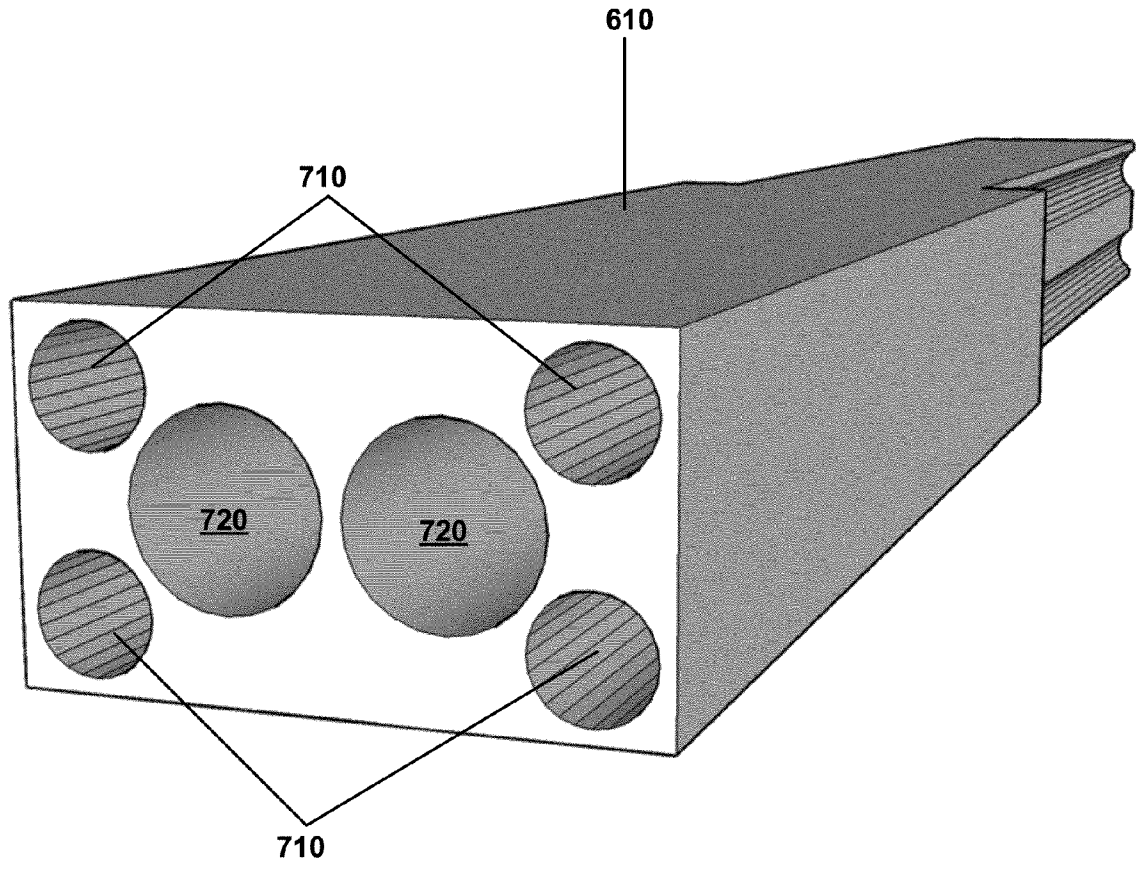

Figure 7A

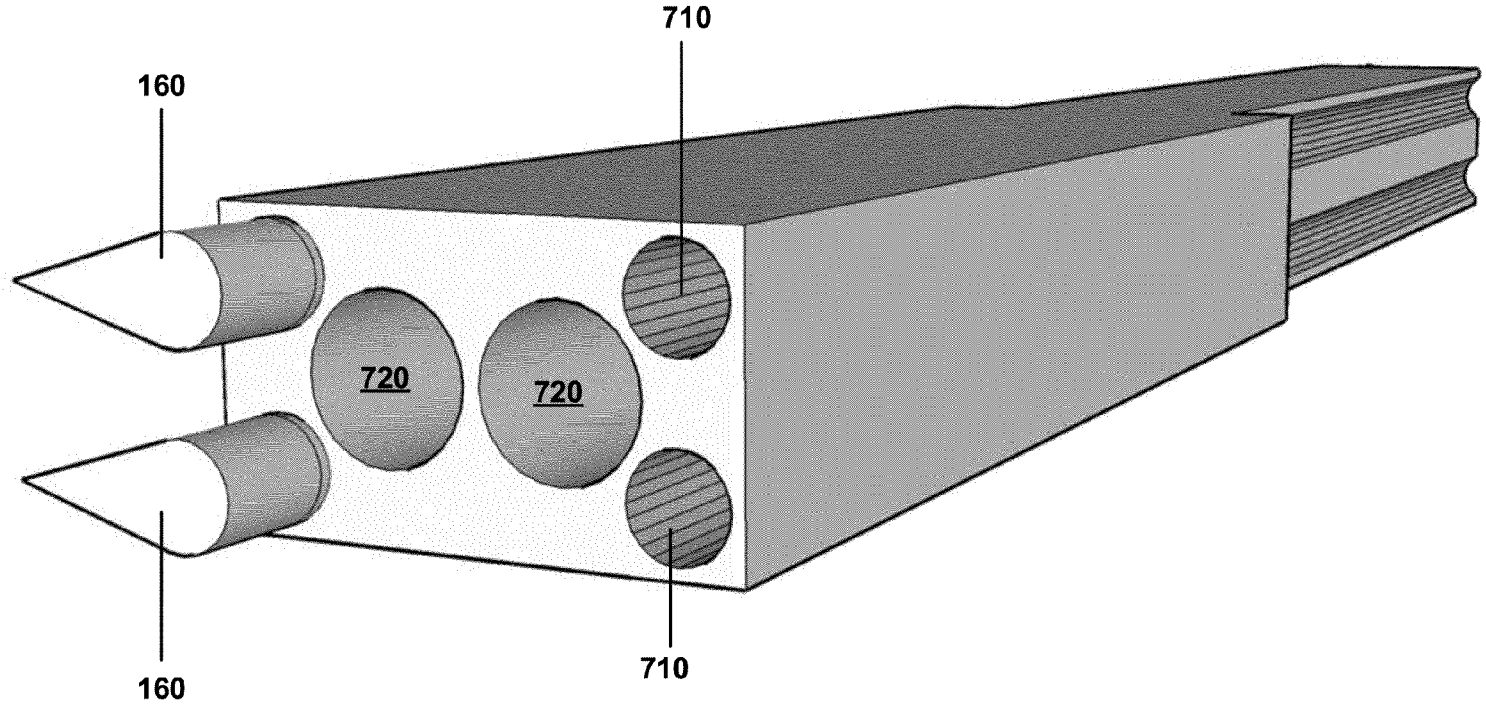

Figure 7B

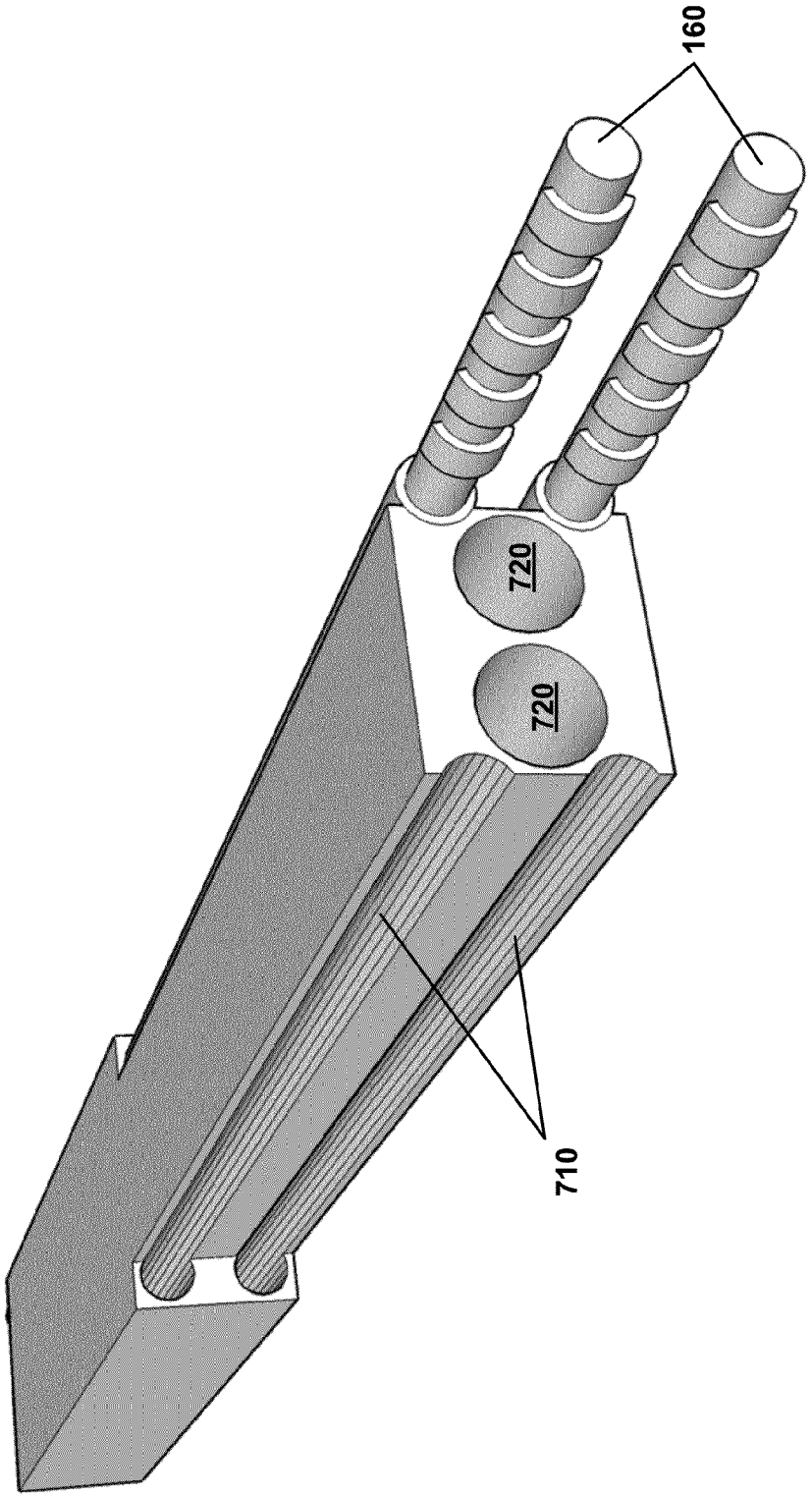

Figure 7C

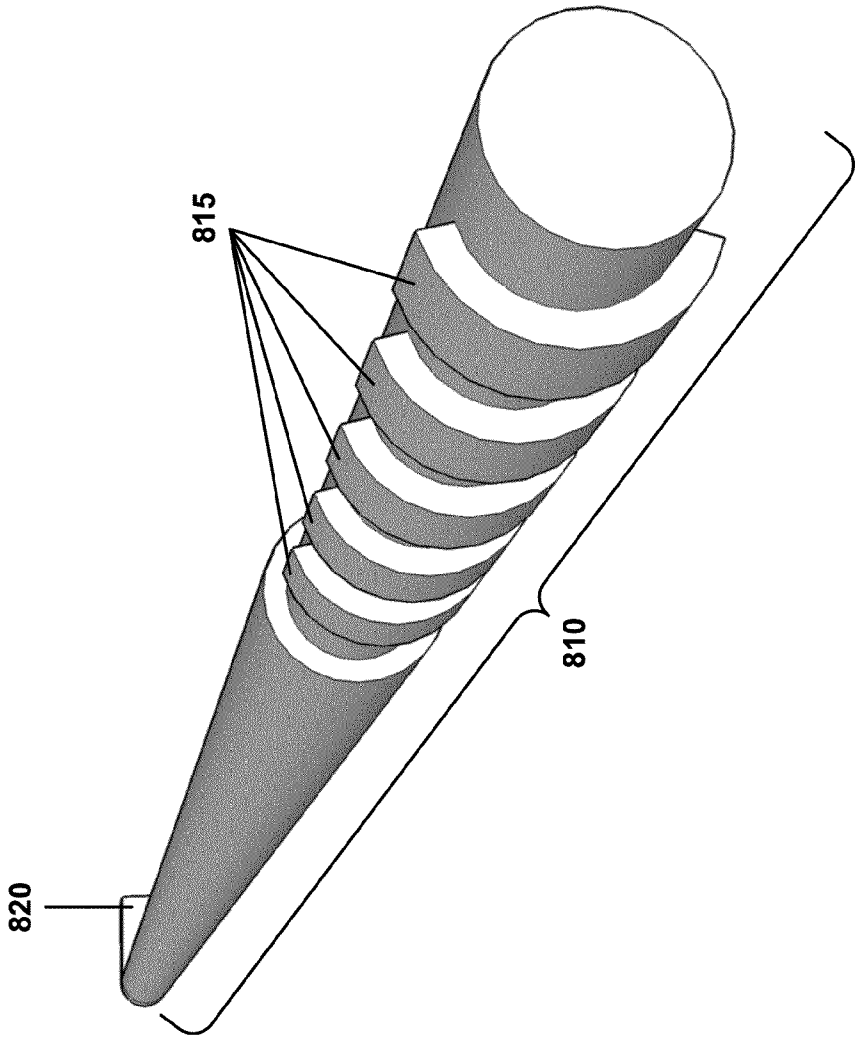

Figure 8

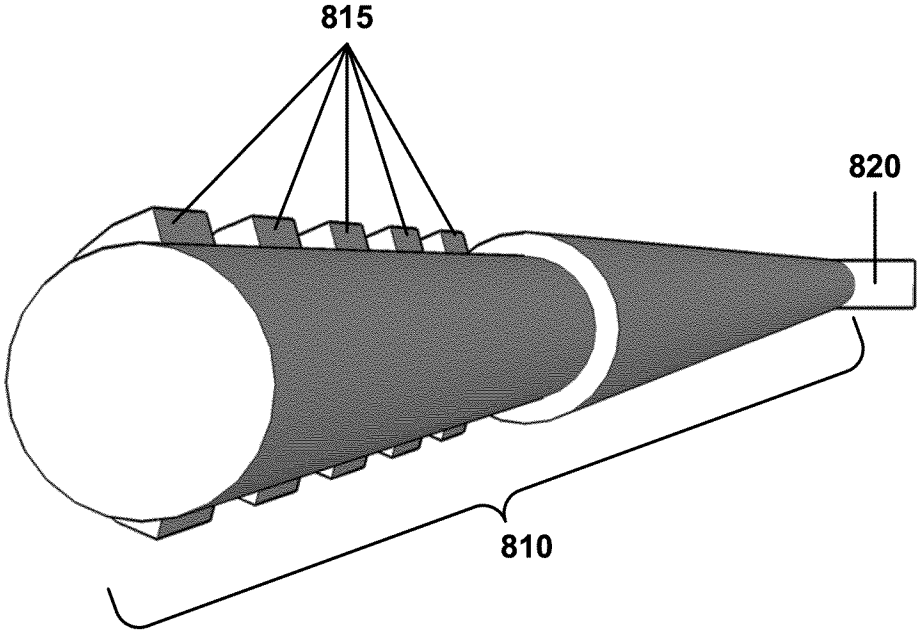

Figure 9

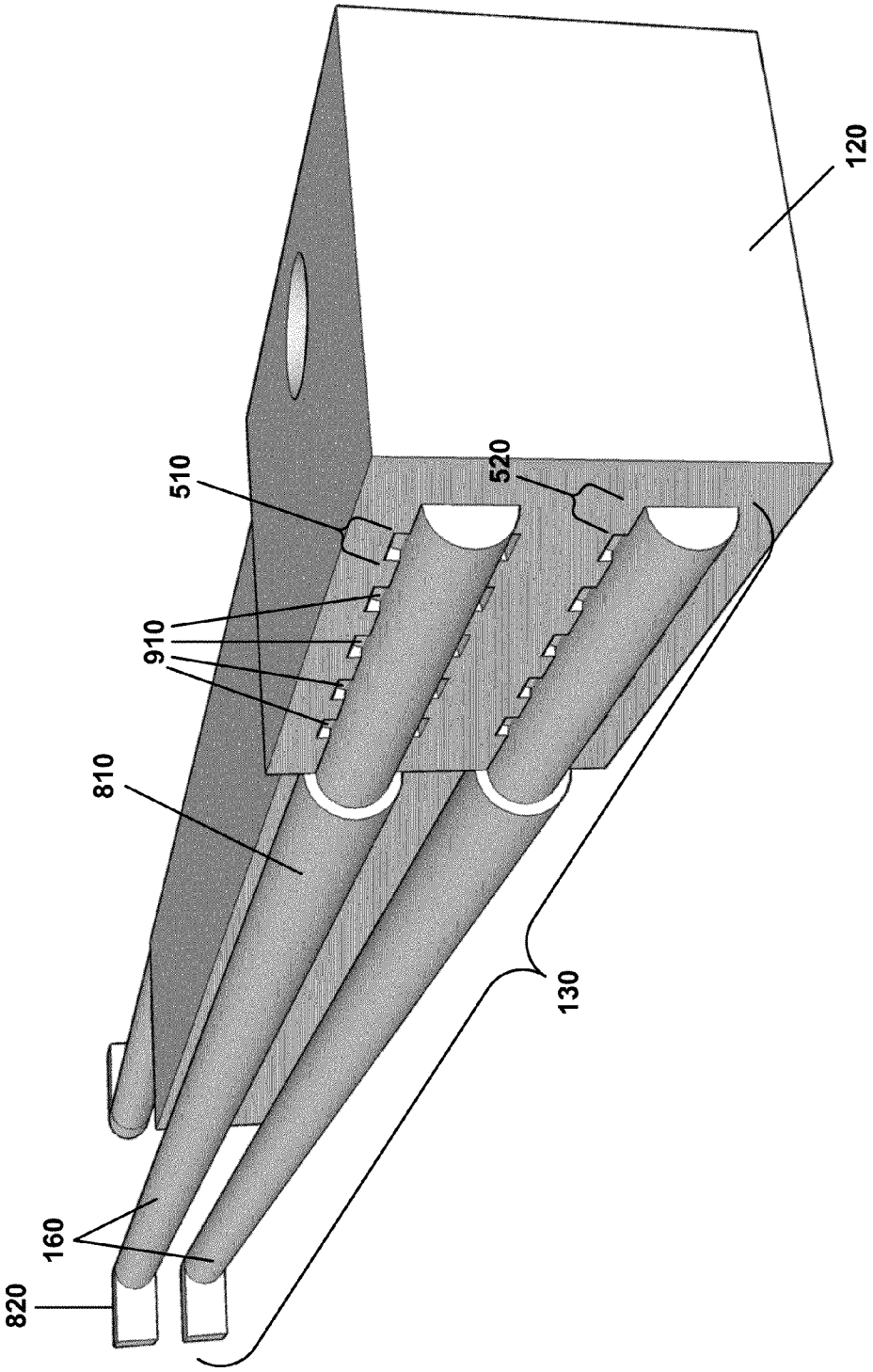

Figure 10A

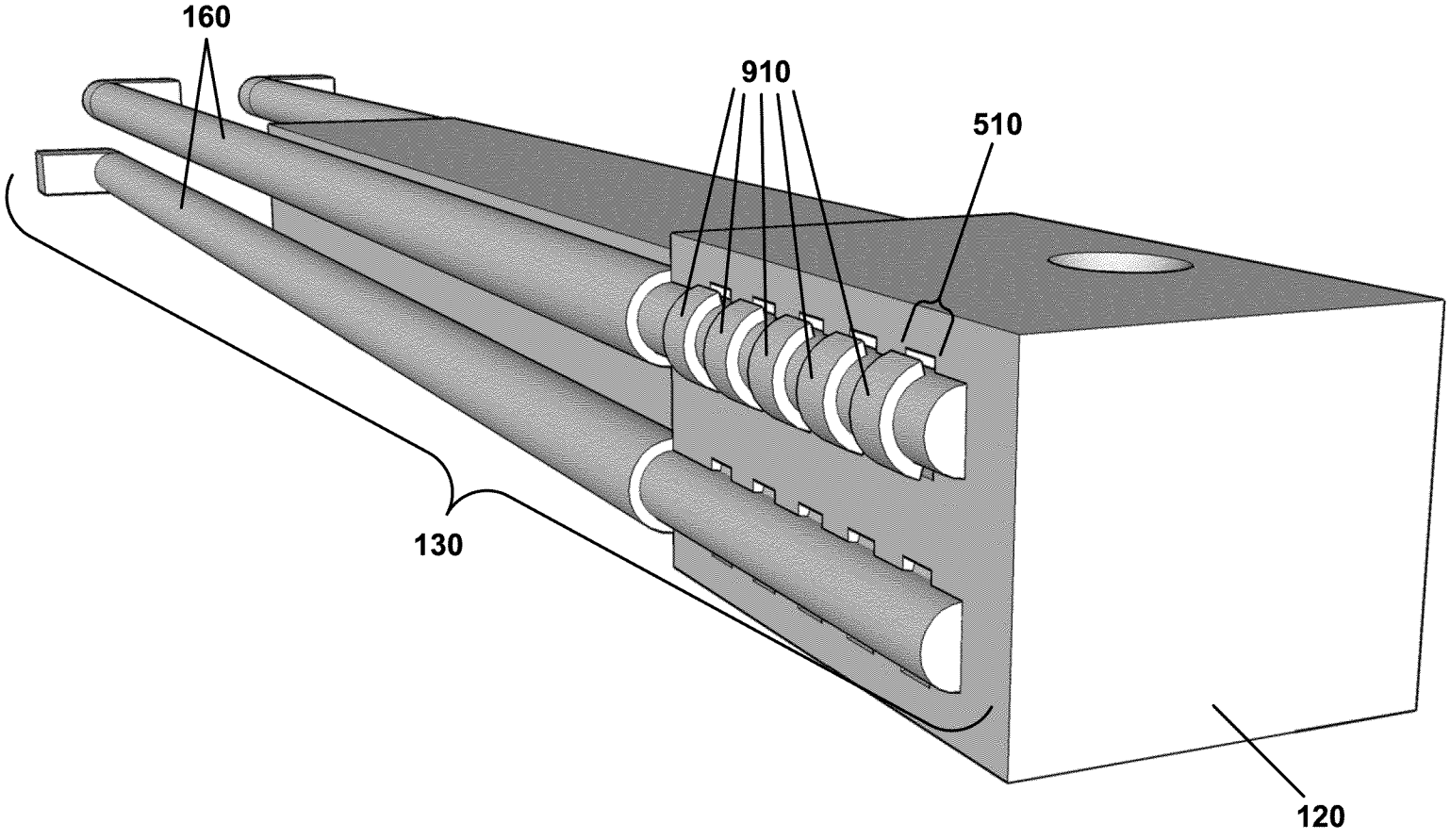

Figure 10B

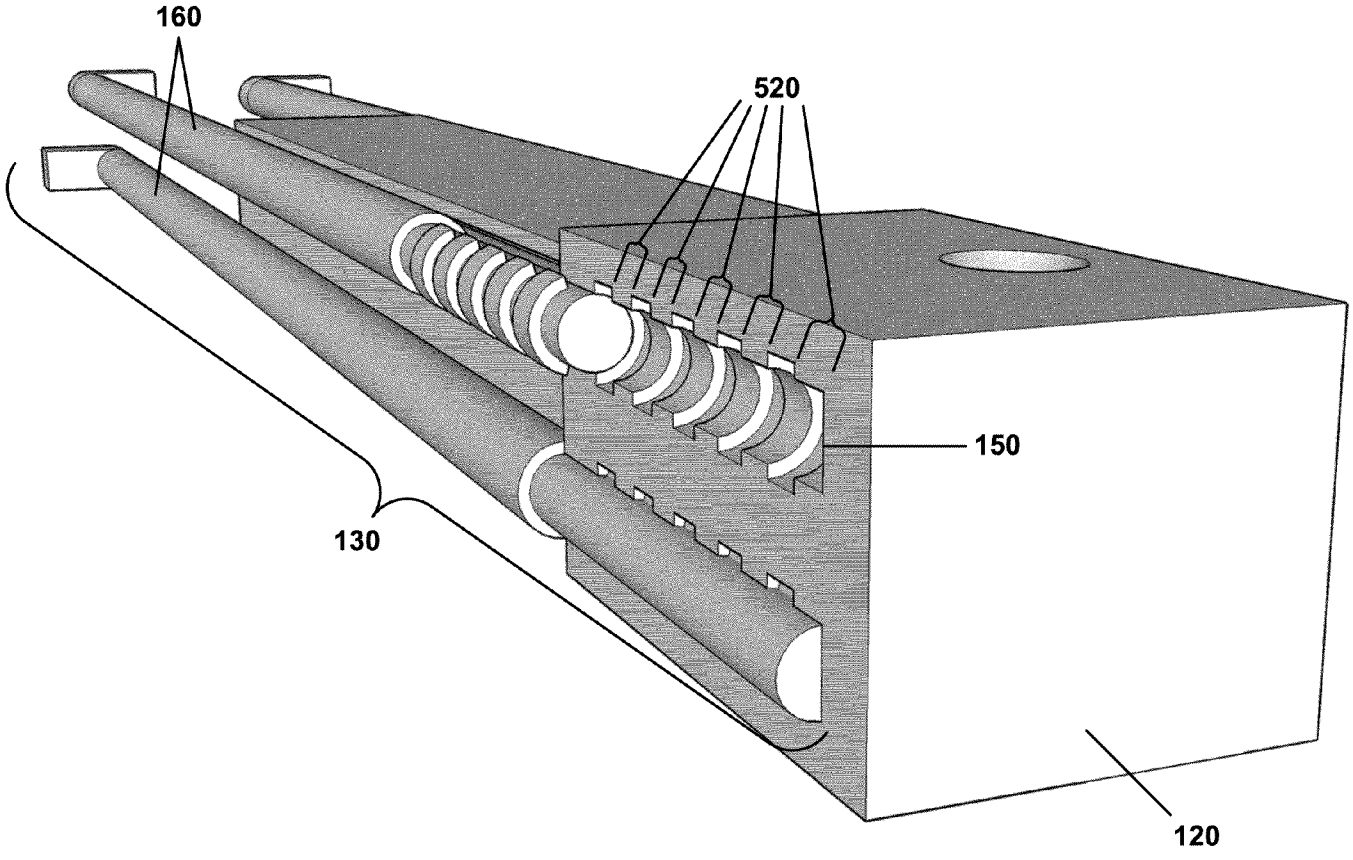

Figure 10C

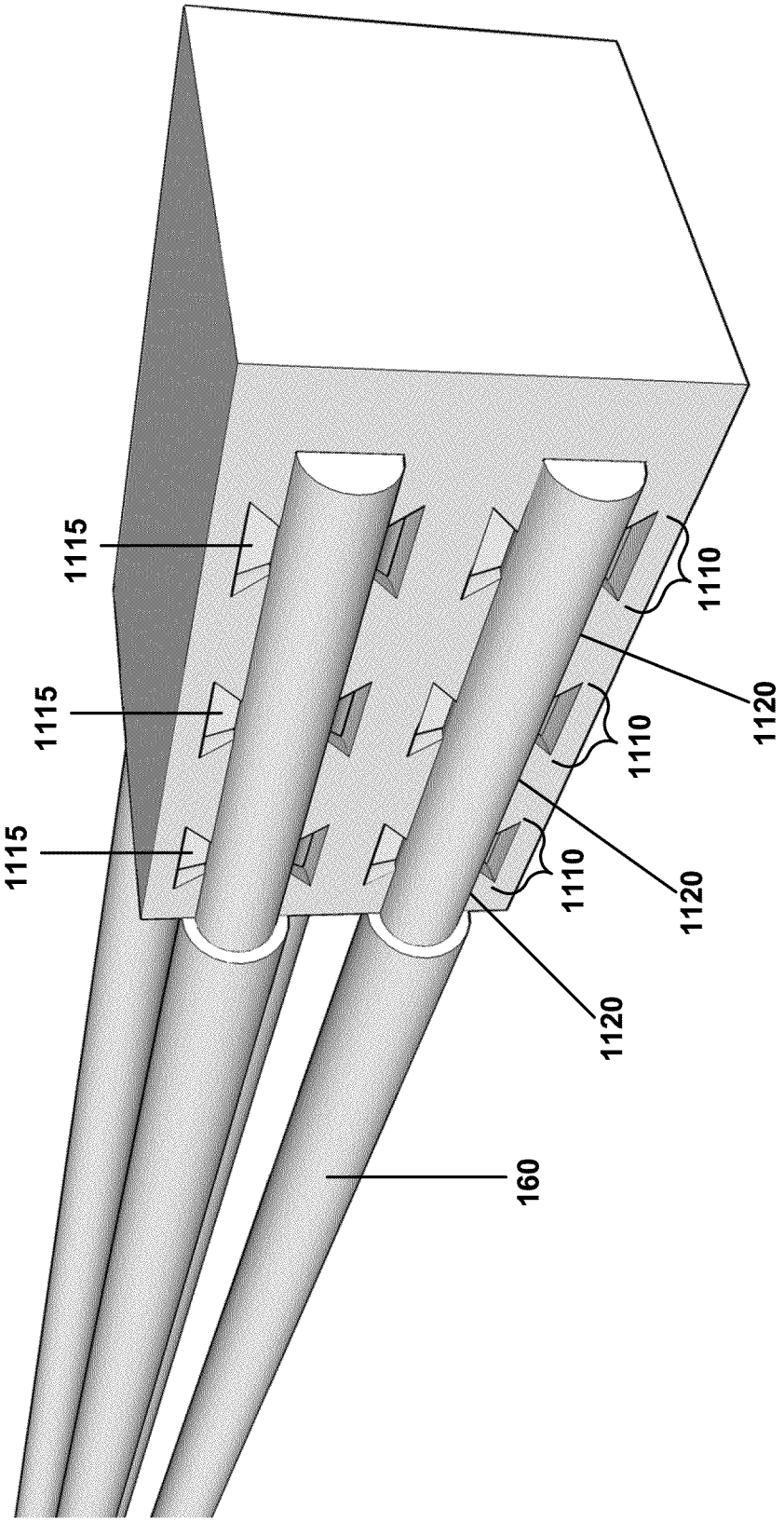

Figure 11

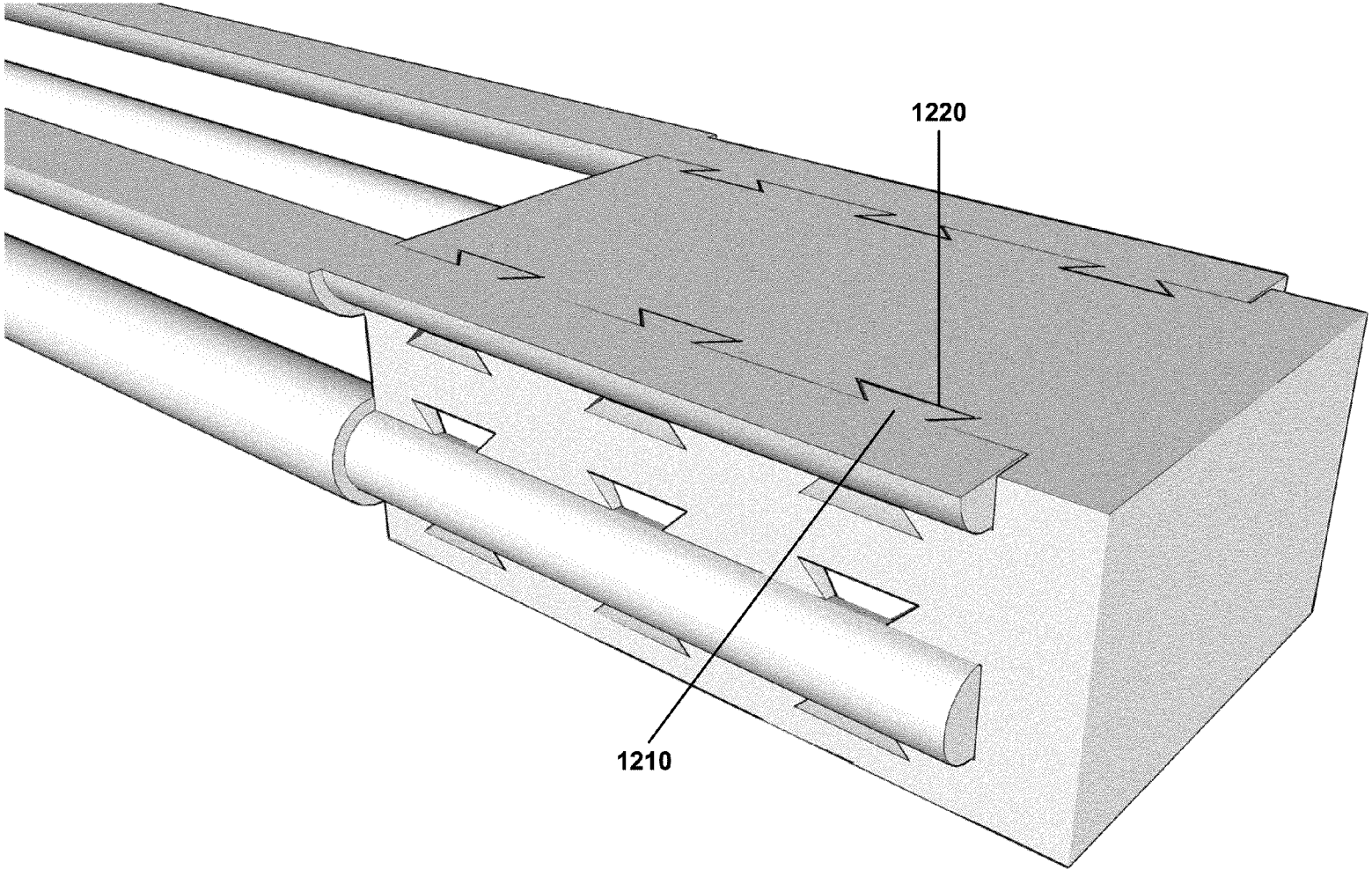

Figure 12

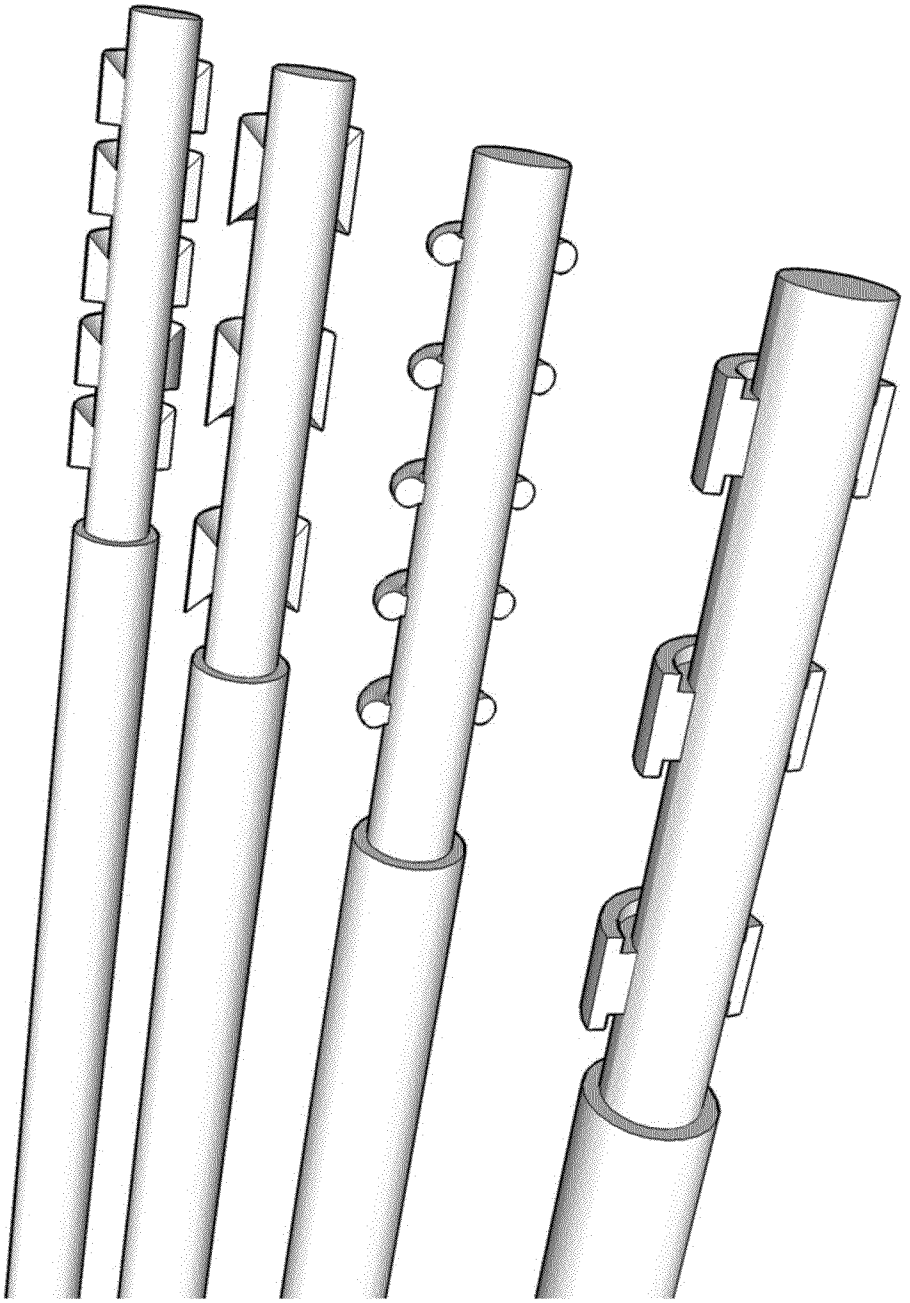

Figure 13

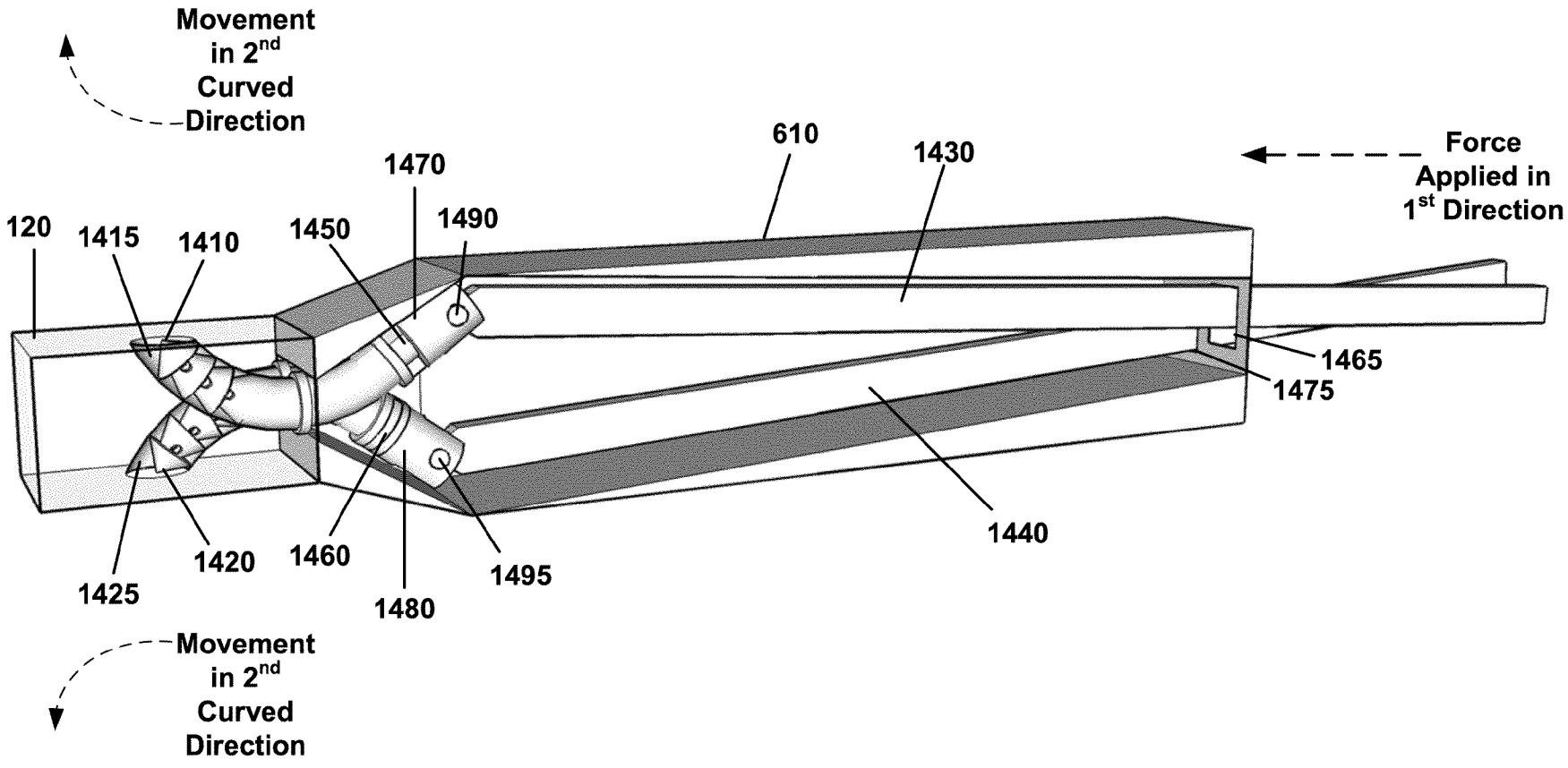
Movement in 2nd Curved Direction
610
1430
Force Applied in 1st Direction
1470
1490
120
1415
1410
1450
1465
1475
1440
1420
1460
1495
1425
1480
Movement in 2nd Curved Direction

Figure 14

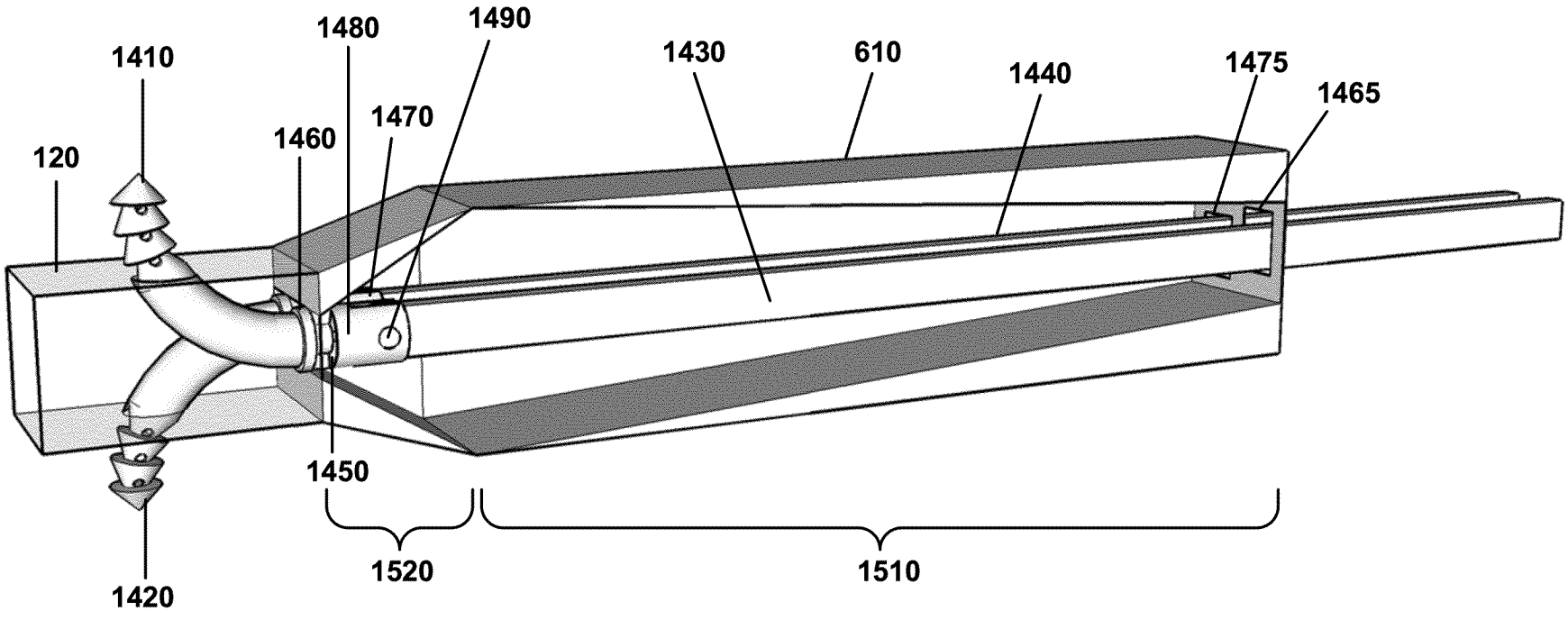
1410
1480
1490
1430
610
1440
1475
1465
120
1460
1470
1450
1520
1510
1420

Figure 15

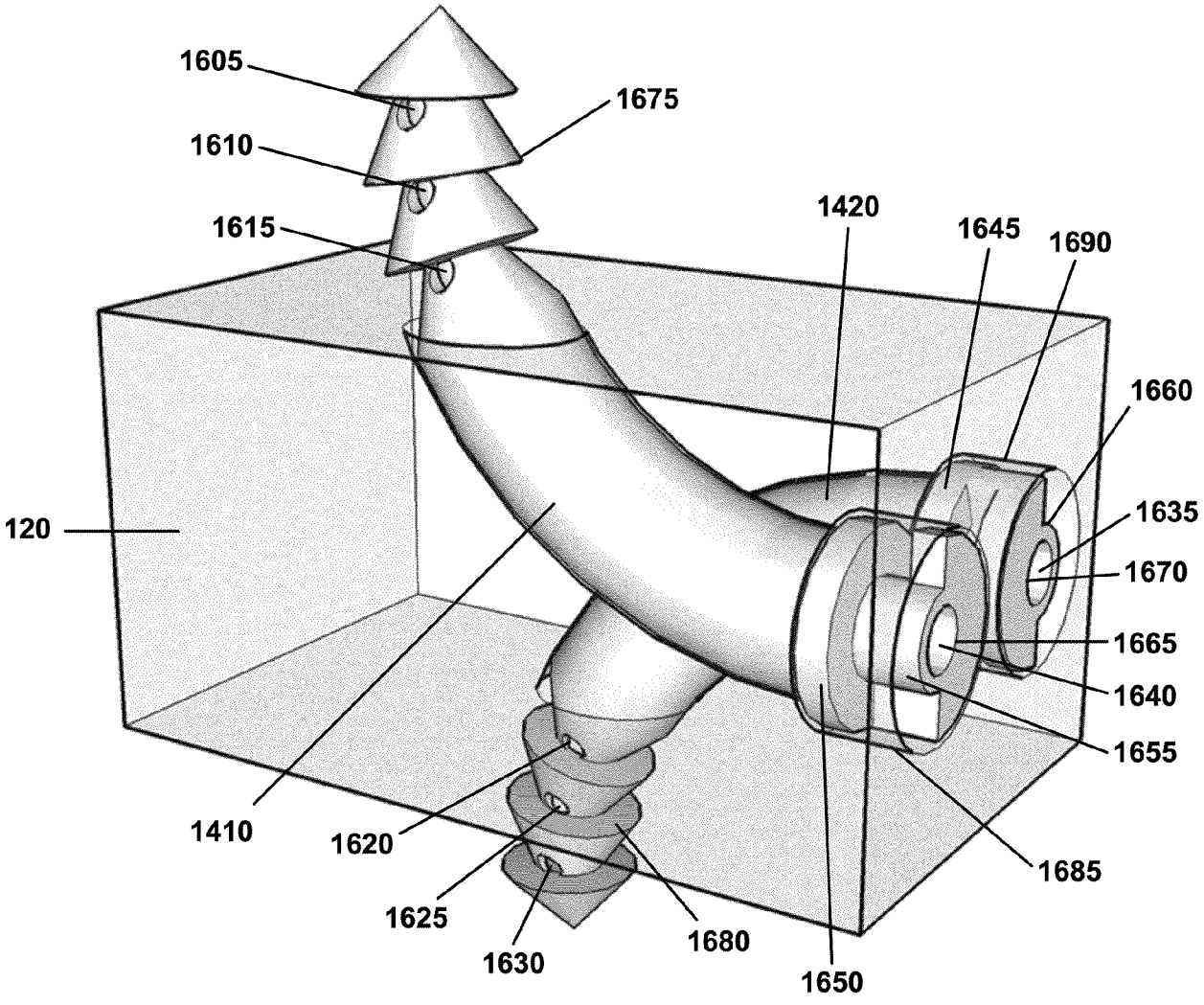
1605
1675
1610
1615
1420
1645
1690
1660
120
1635
1670
1665
1640
1655
1410
1620
1685
1625
1680
1630
1650

Figure 16

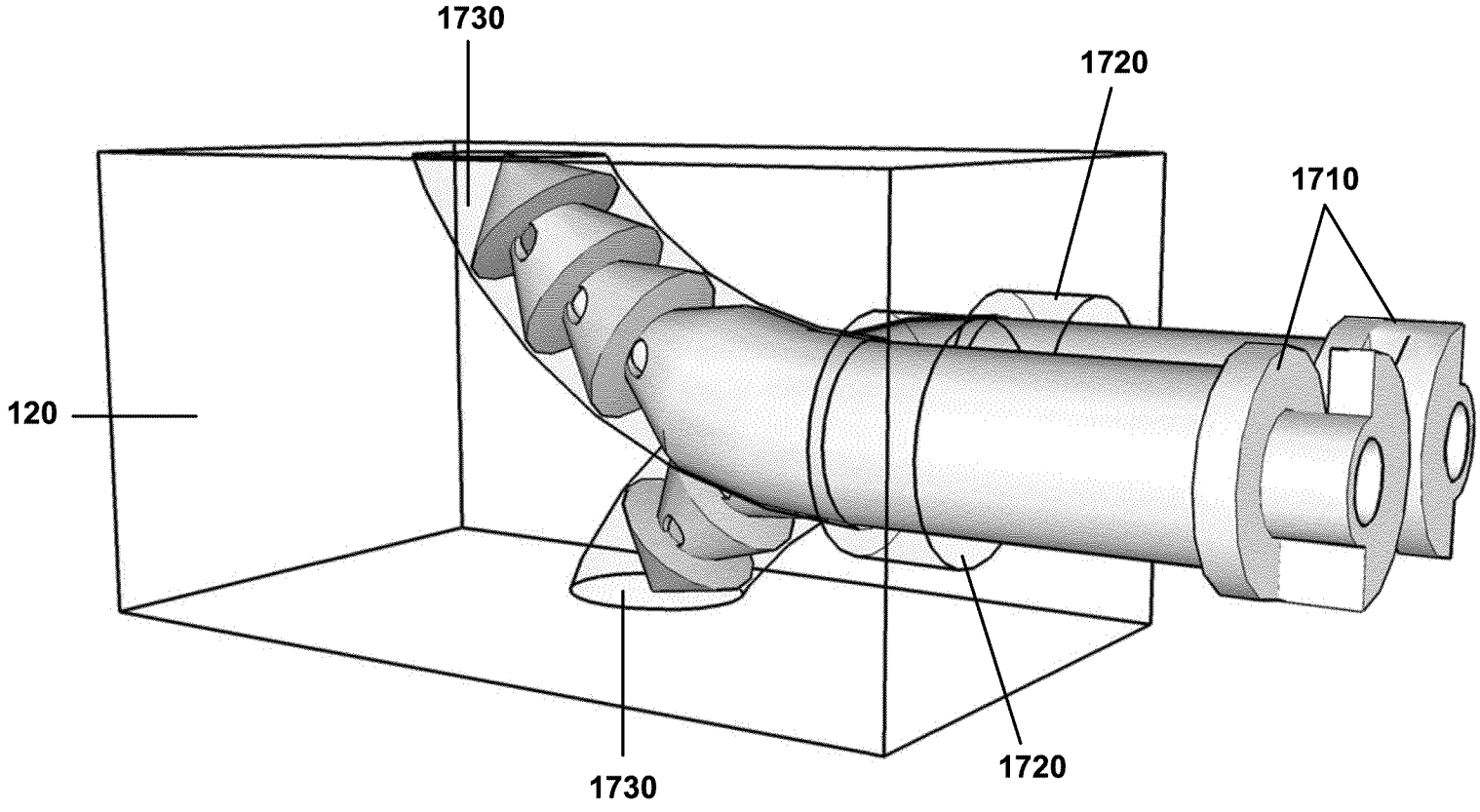

Figure 17

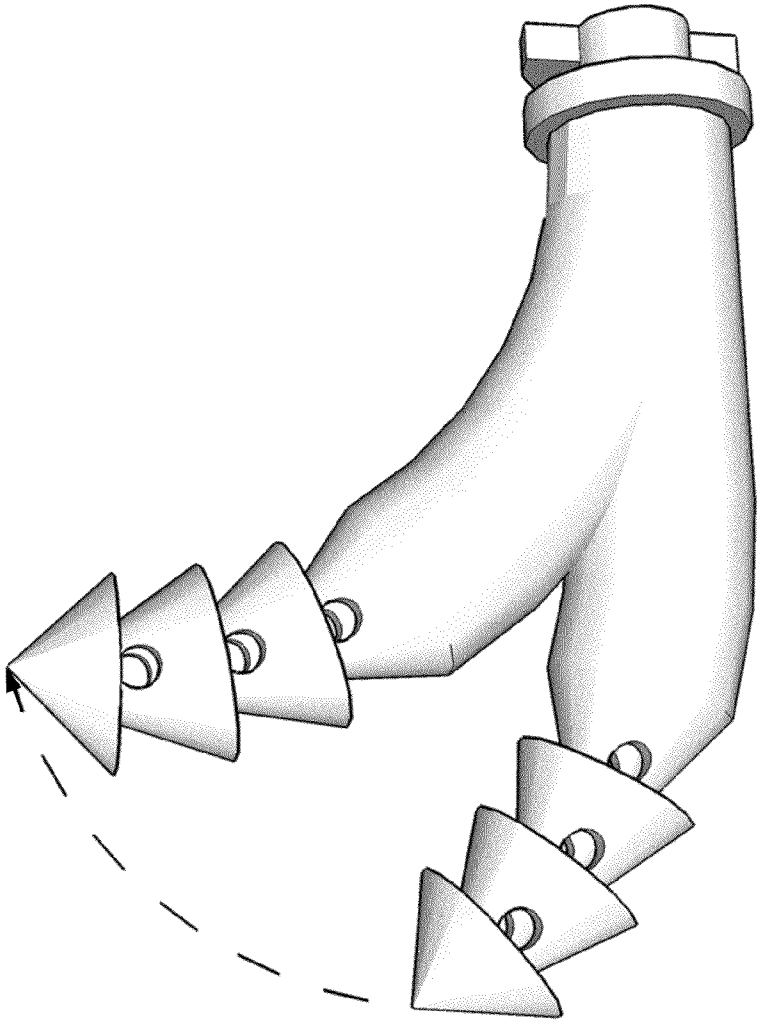

Figure 18

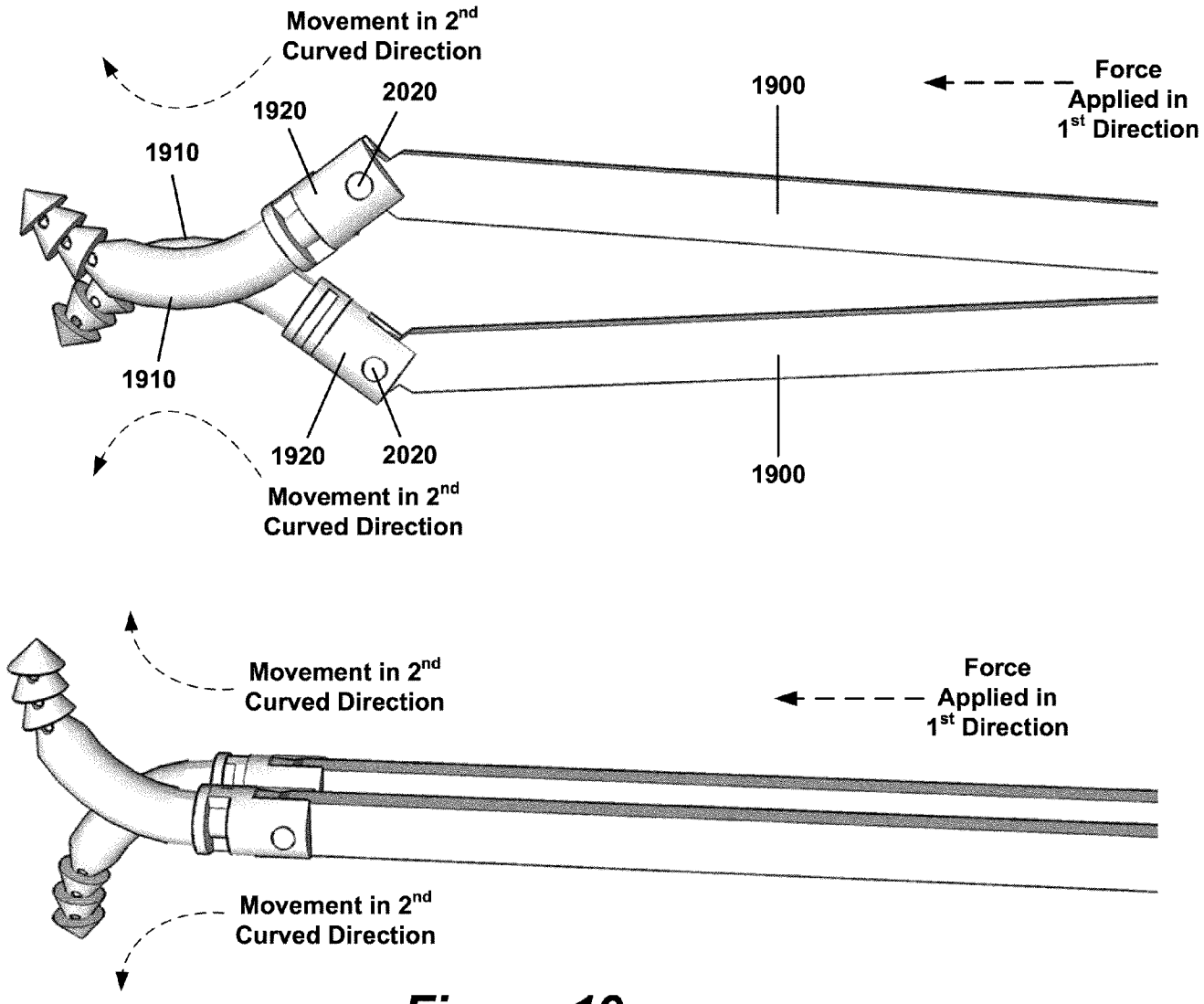
Movement in 2nd Curved Direction
2020
1920
1910
1900
Force Applied in 1st Direction
1910
1920
2020
1900
Movement in 2nd Curved Direction
Movement in 2nd Curved Direction
Force Applied in 1st Direction
Movement in 2nd Curved Direction

Figure 19

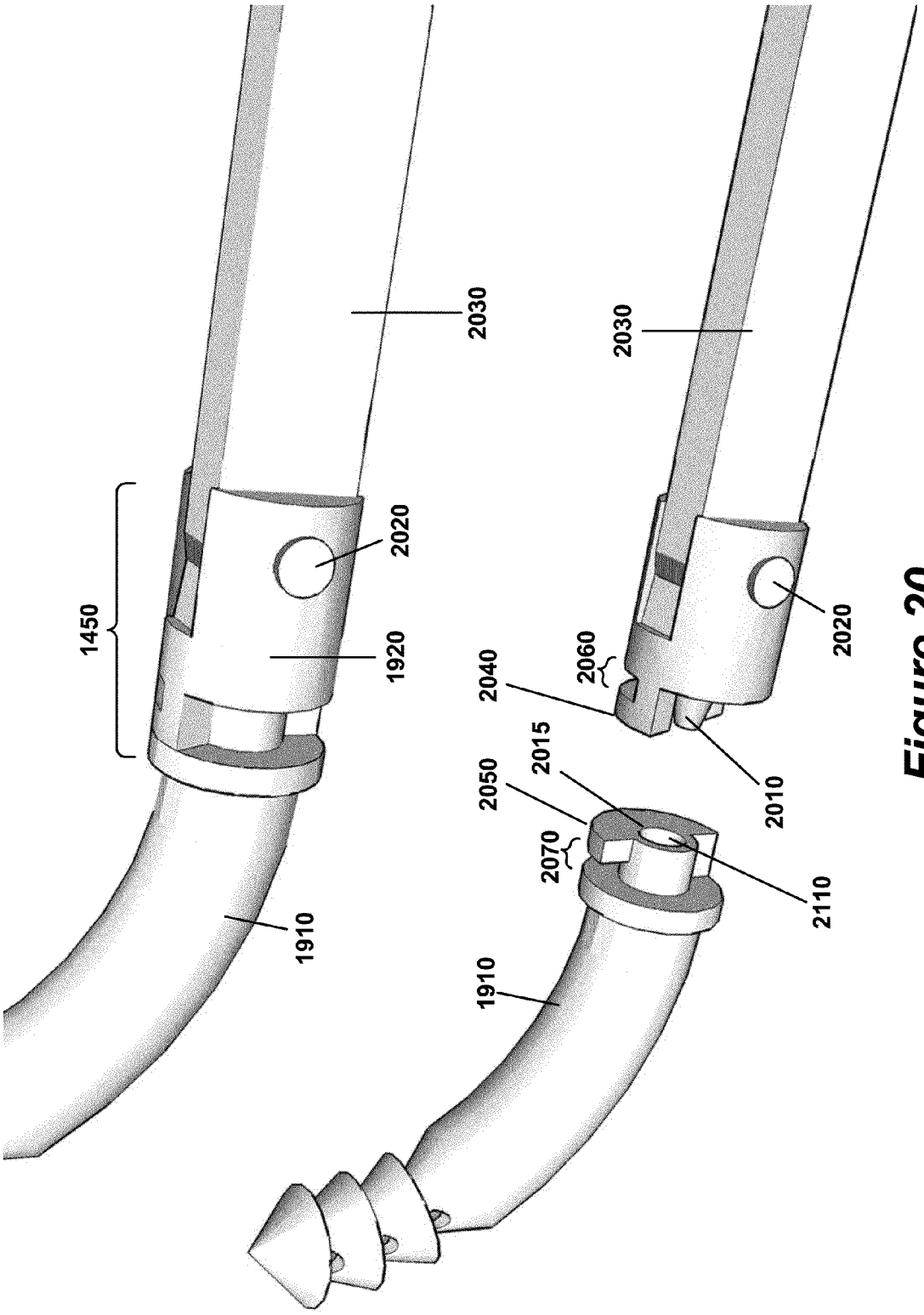
1450
1910
1920
2020
2030
1910
2050
2070
2015
2110
2040
2060
2010
2020
2030

Figure 20

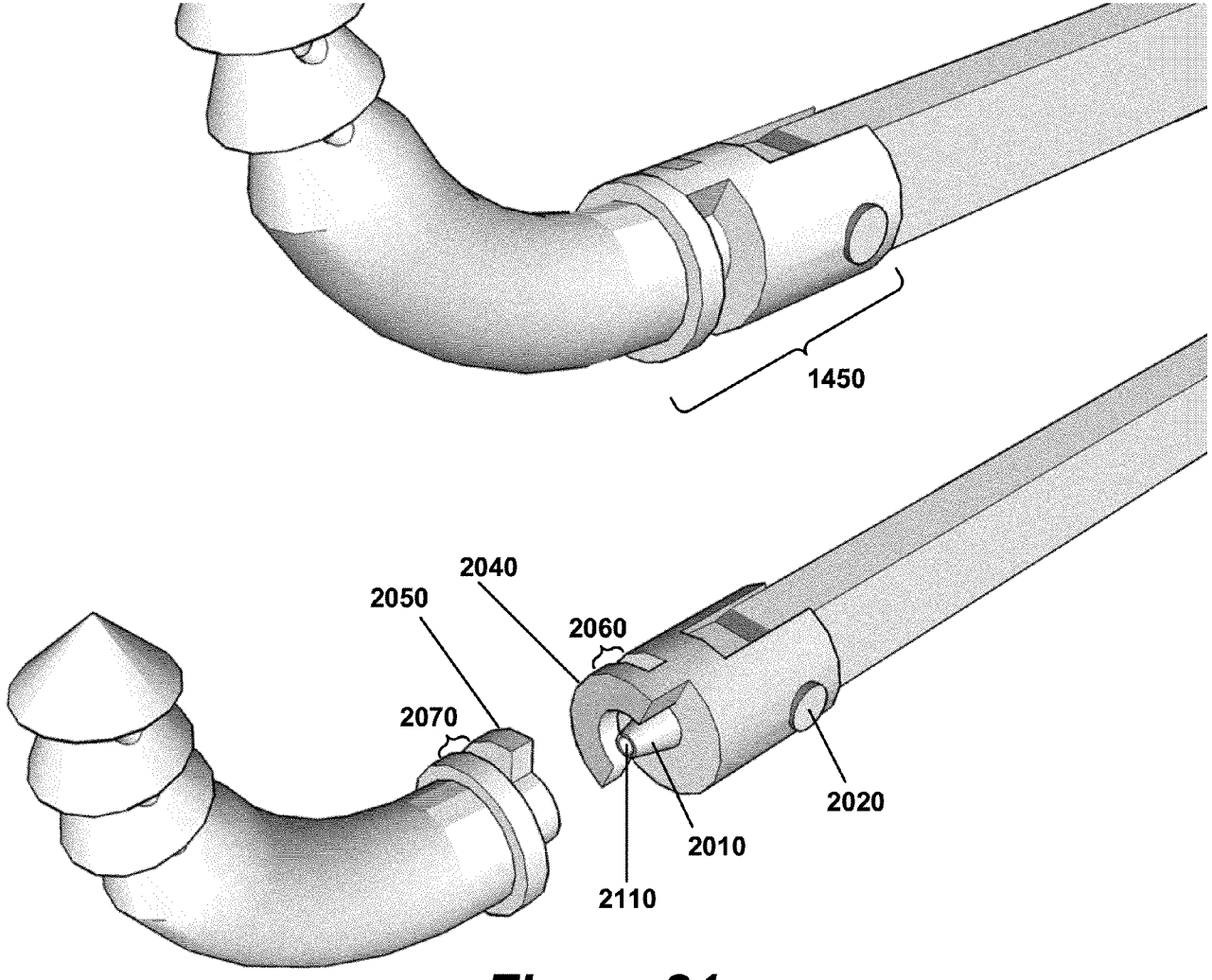

Figure 21

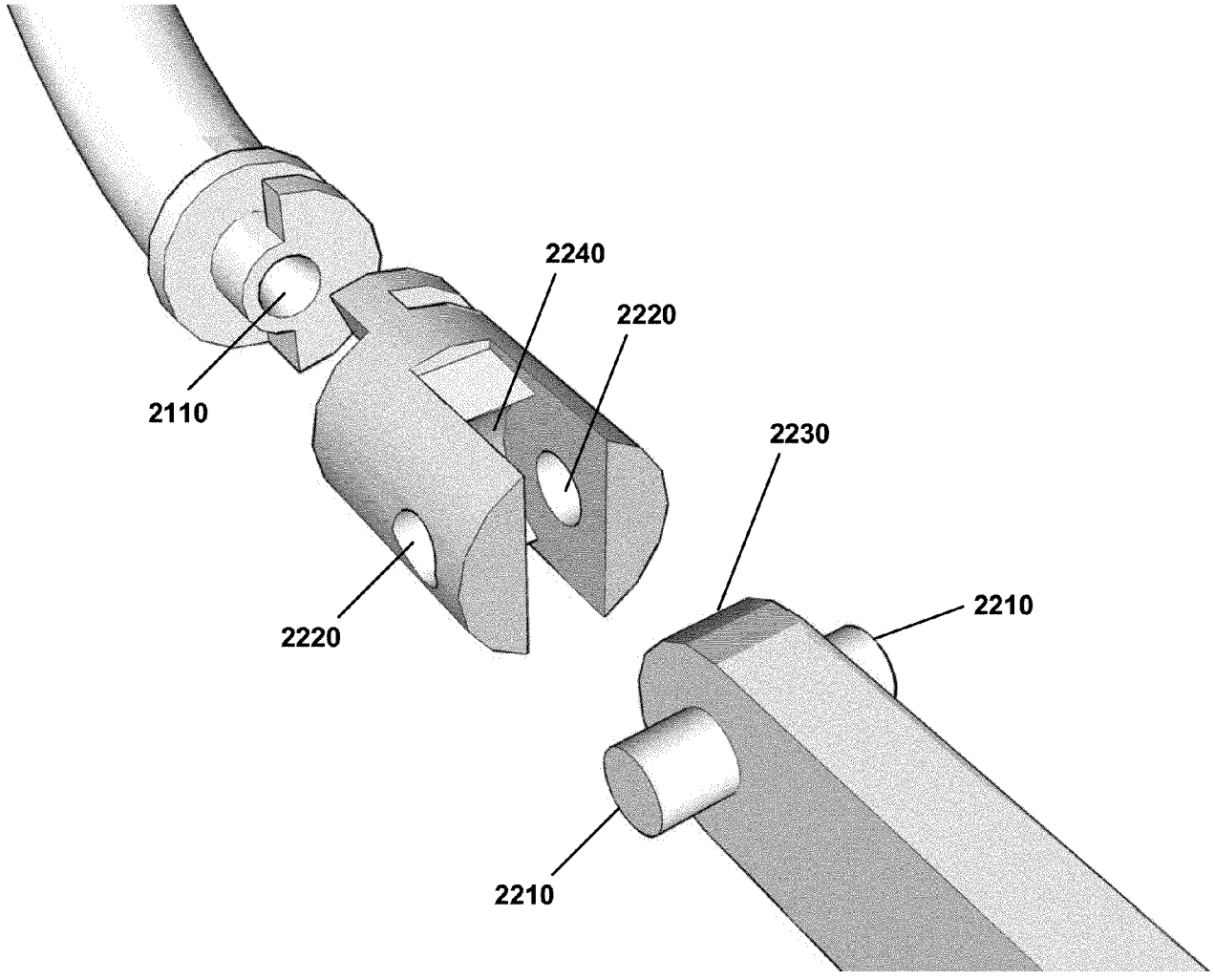

Figure 22A

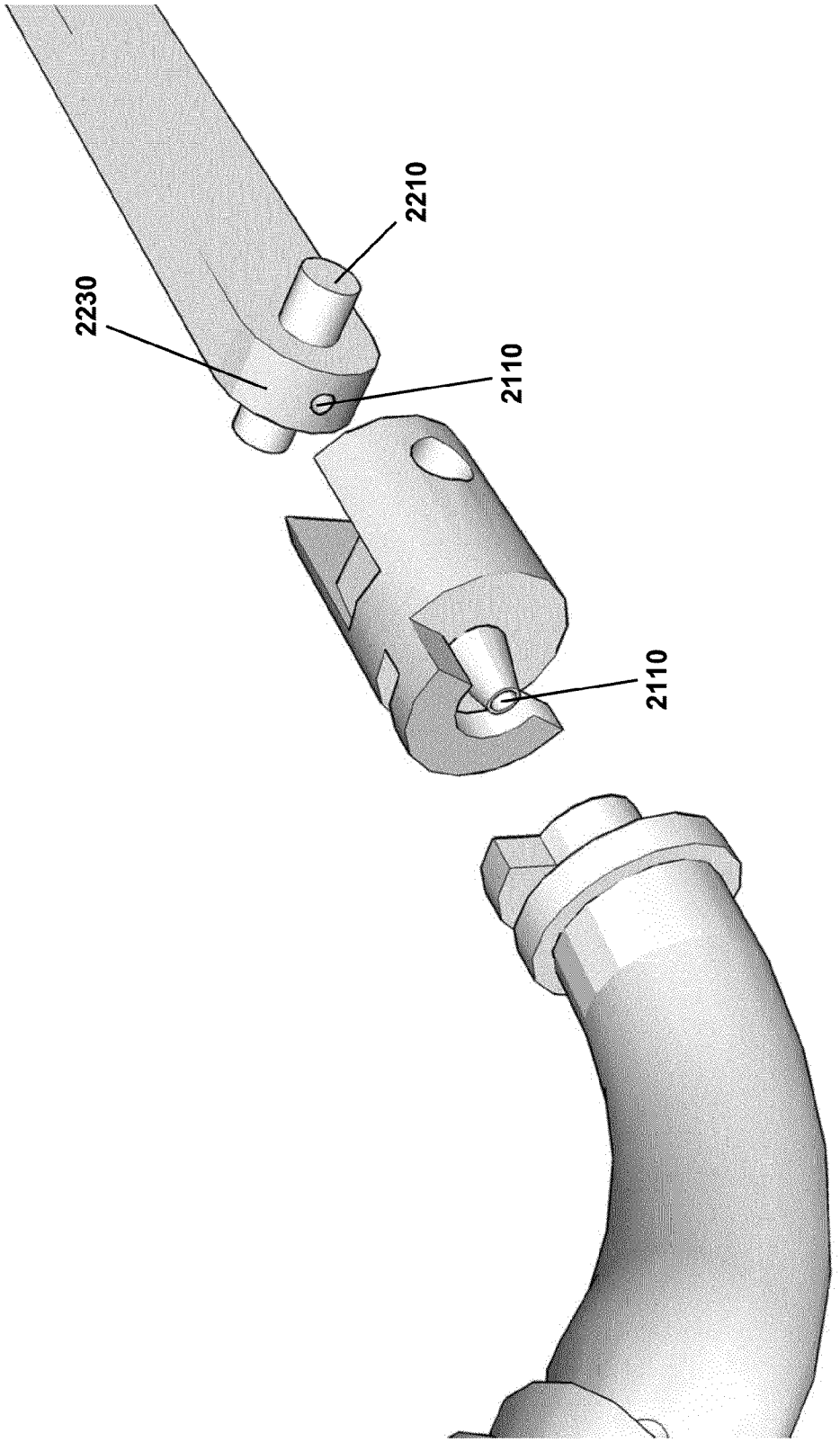

Figure 22B

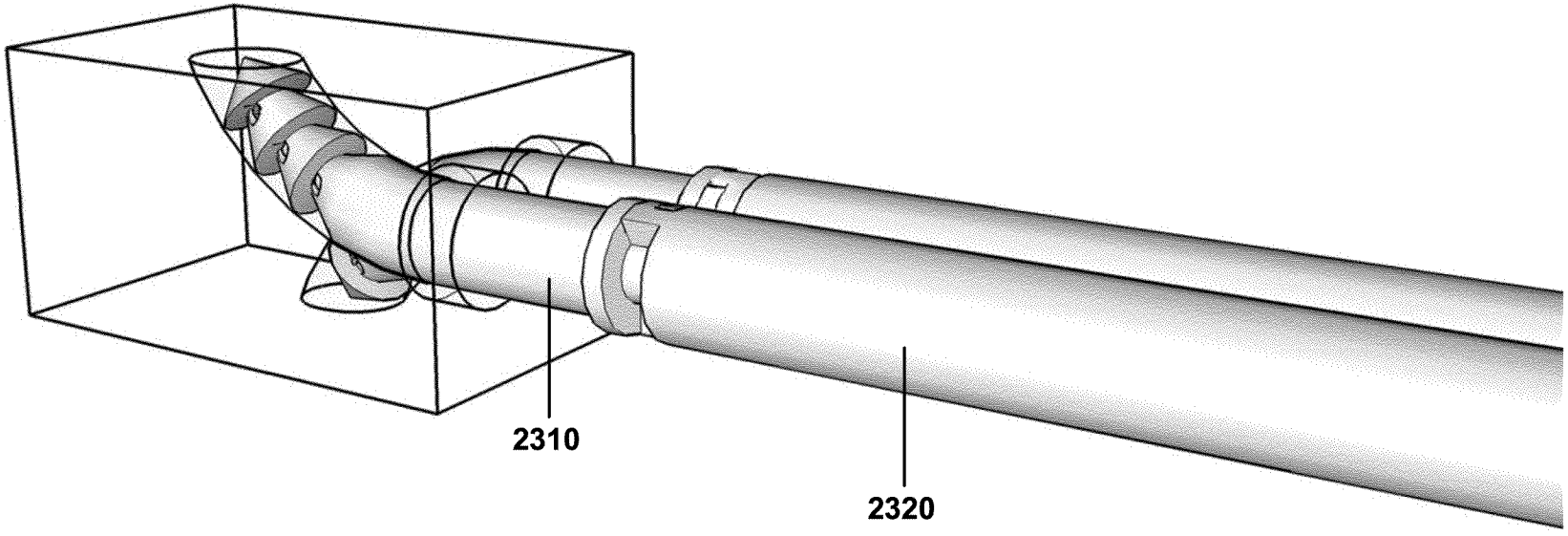

Figure 23A

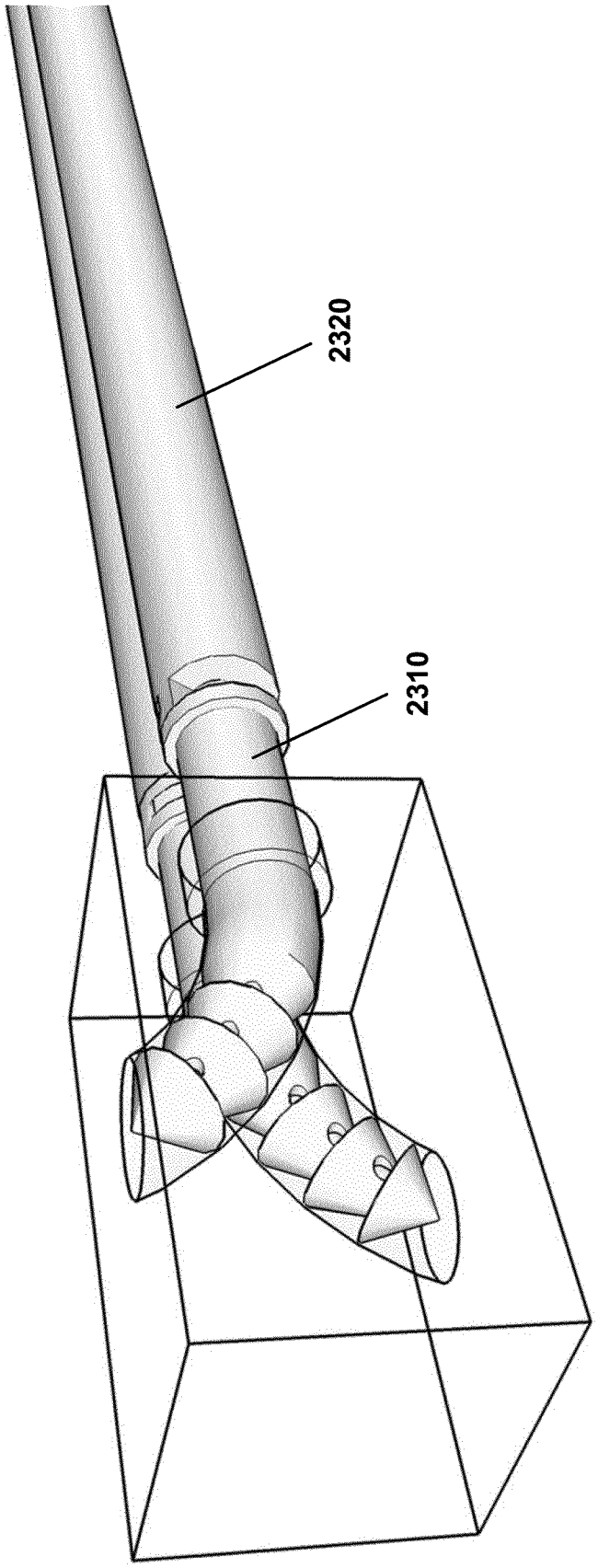

Figure 23B

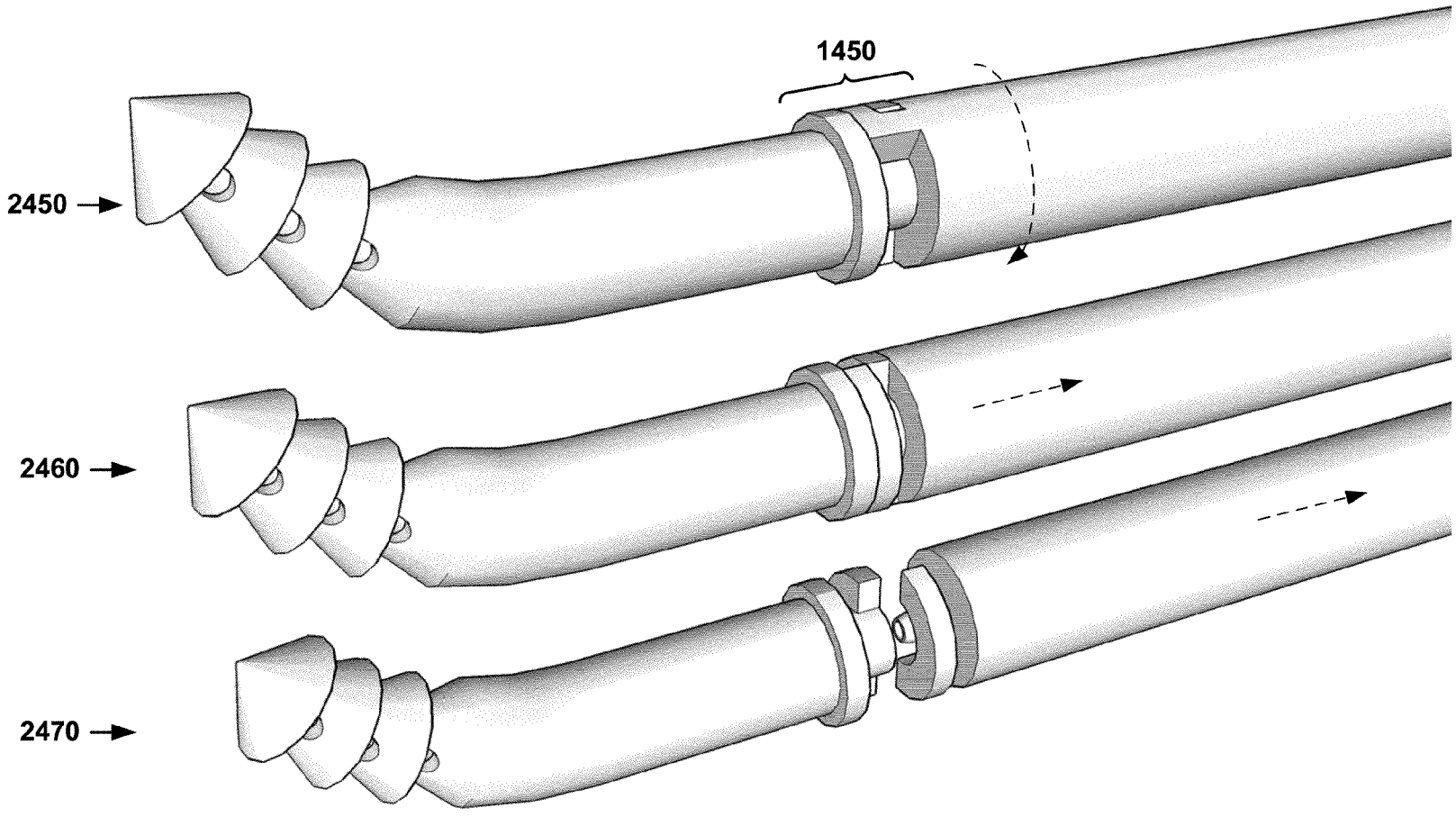

Figure 24A

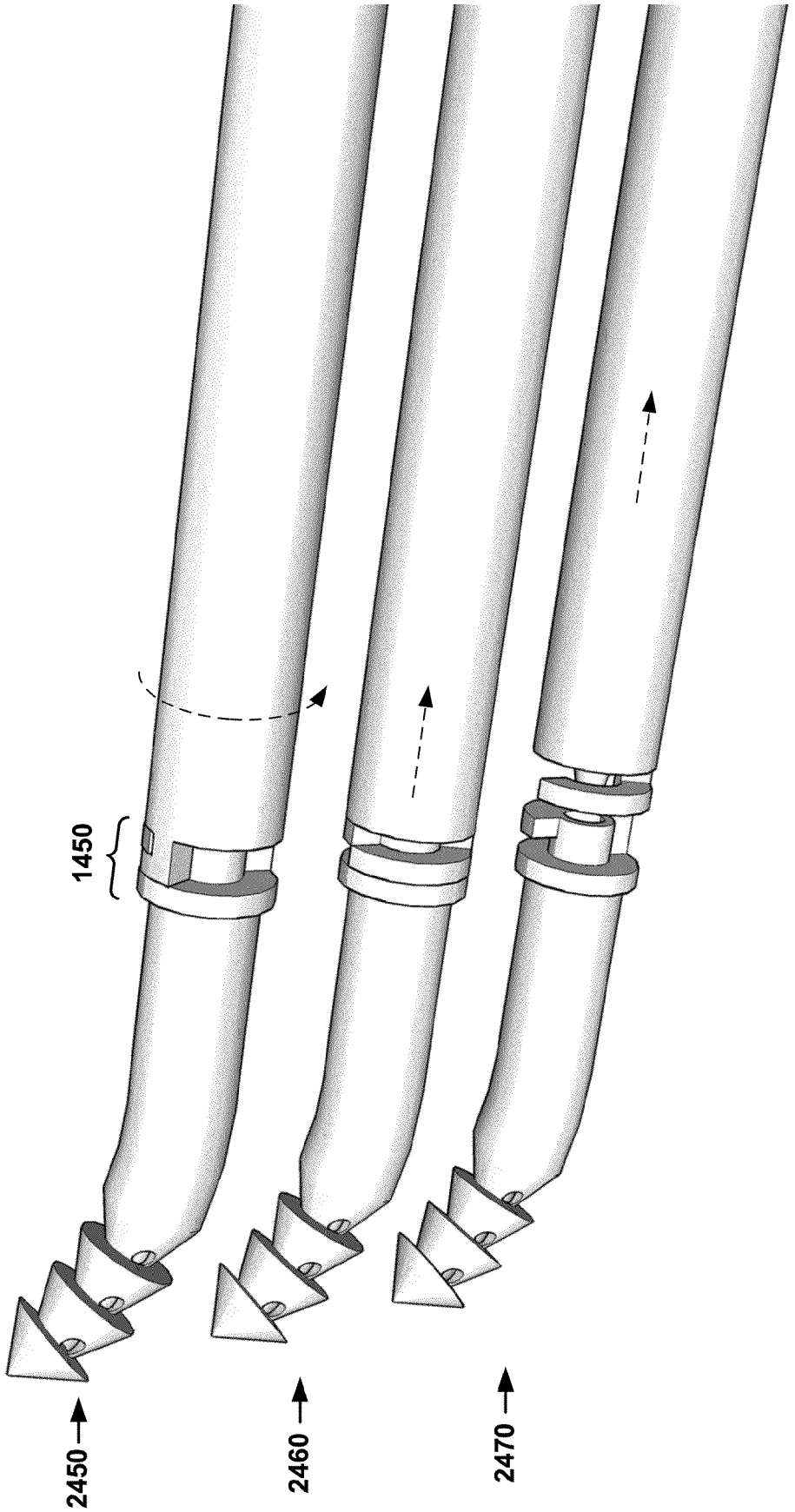

Figure 24B

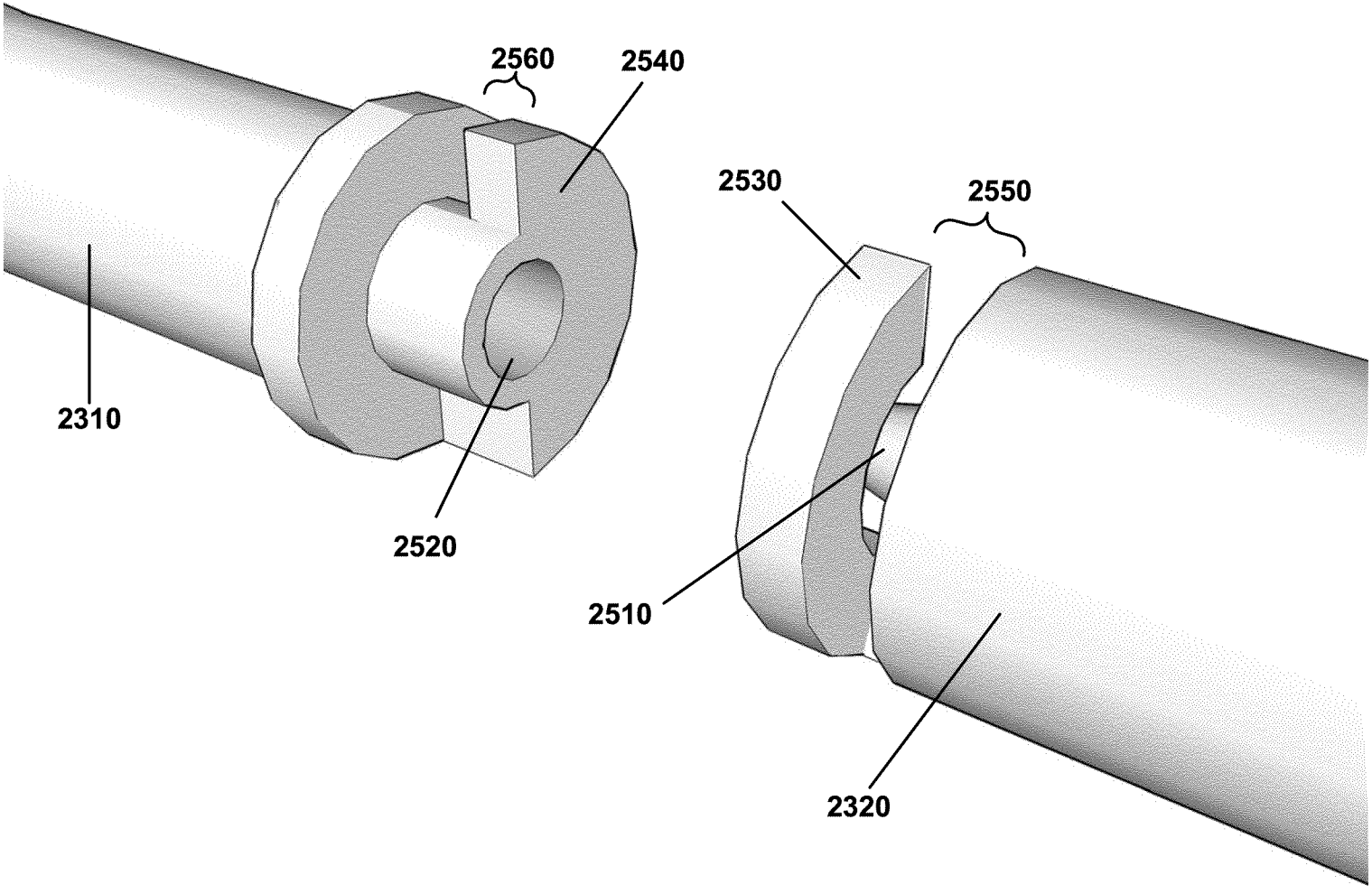

Figure 25A

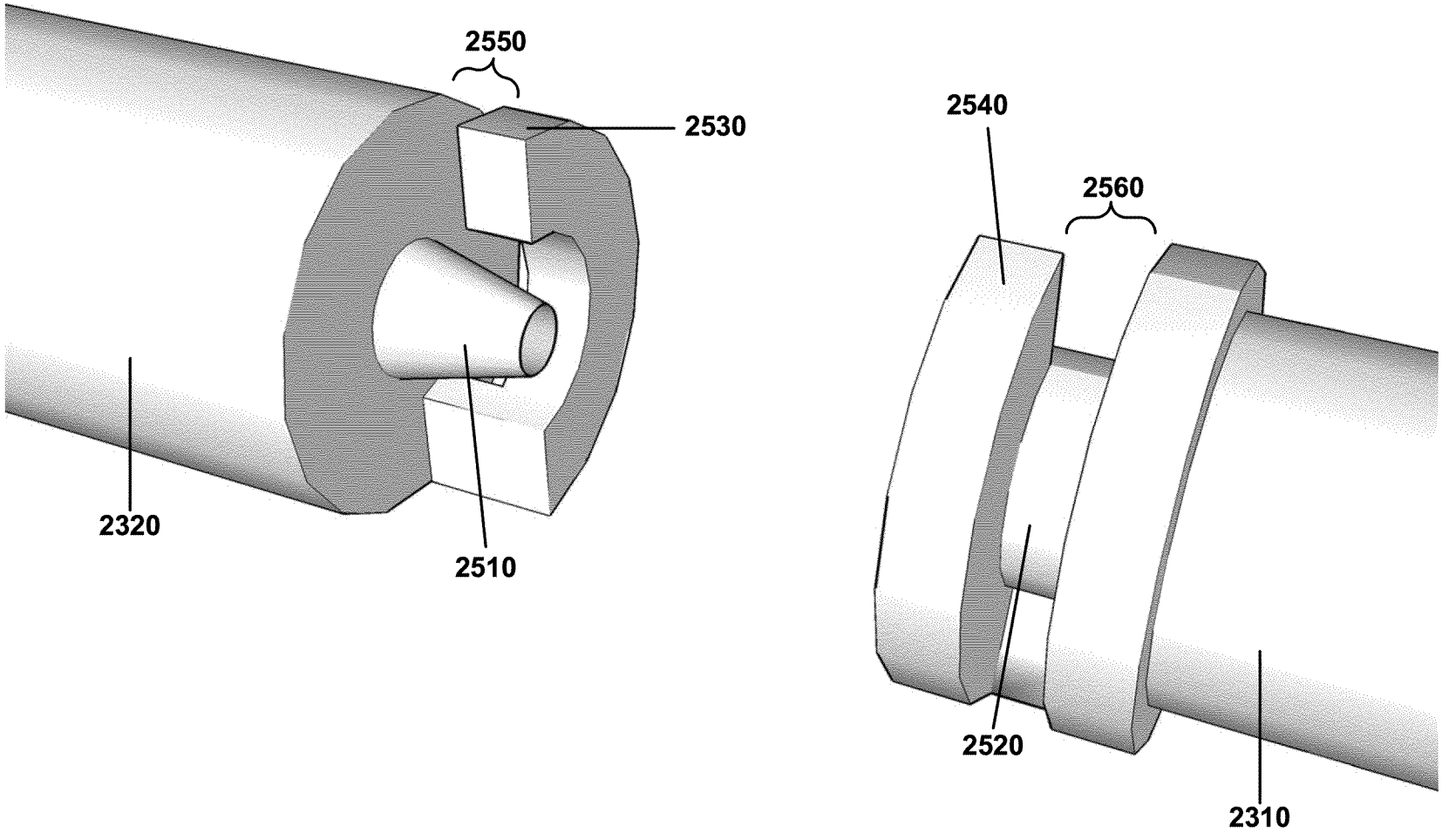

Figure 25B

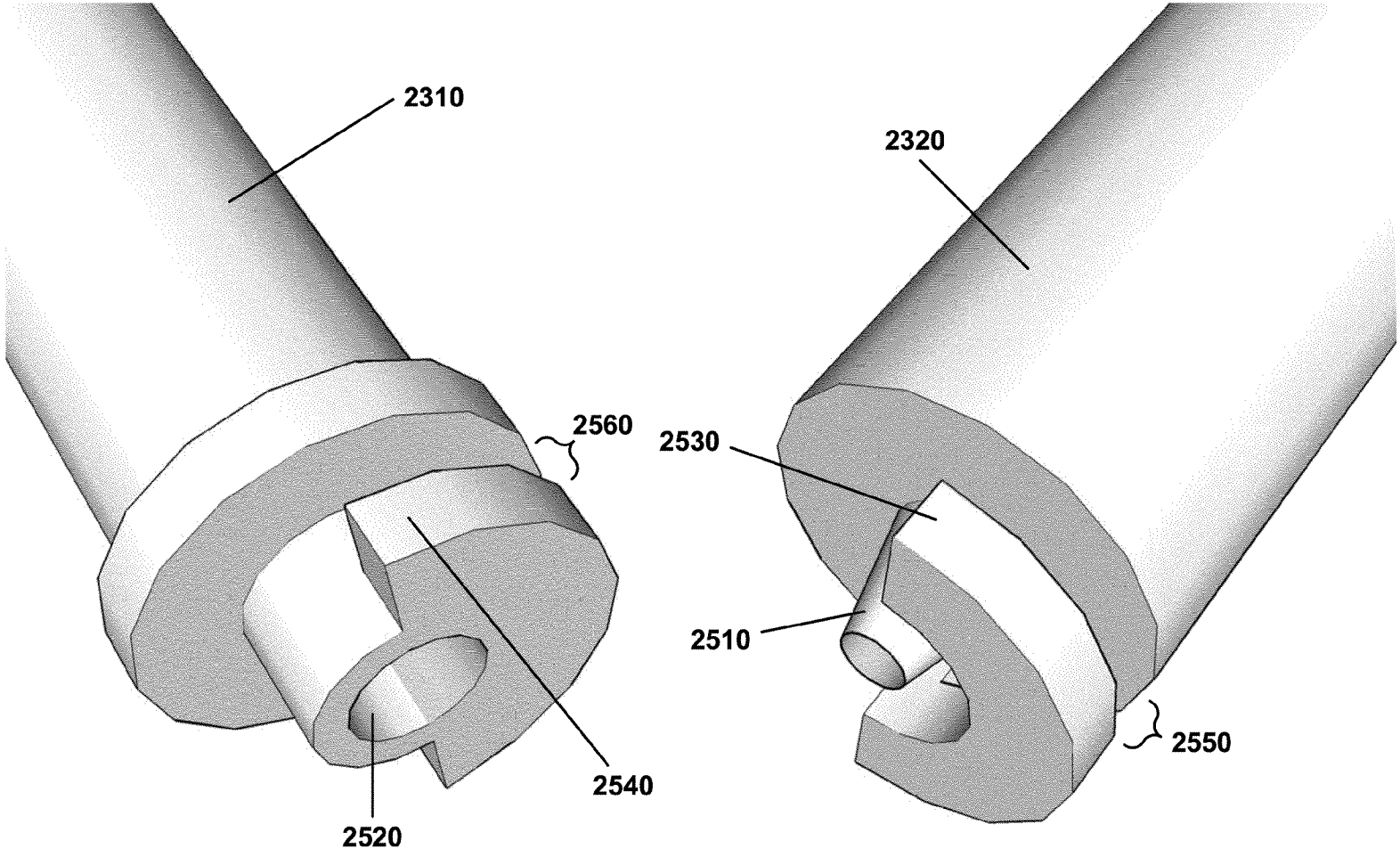

Figure 25C

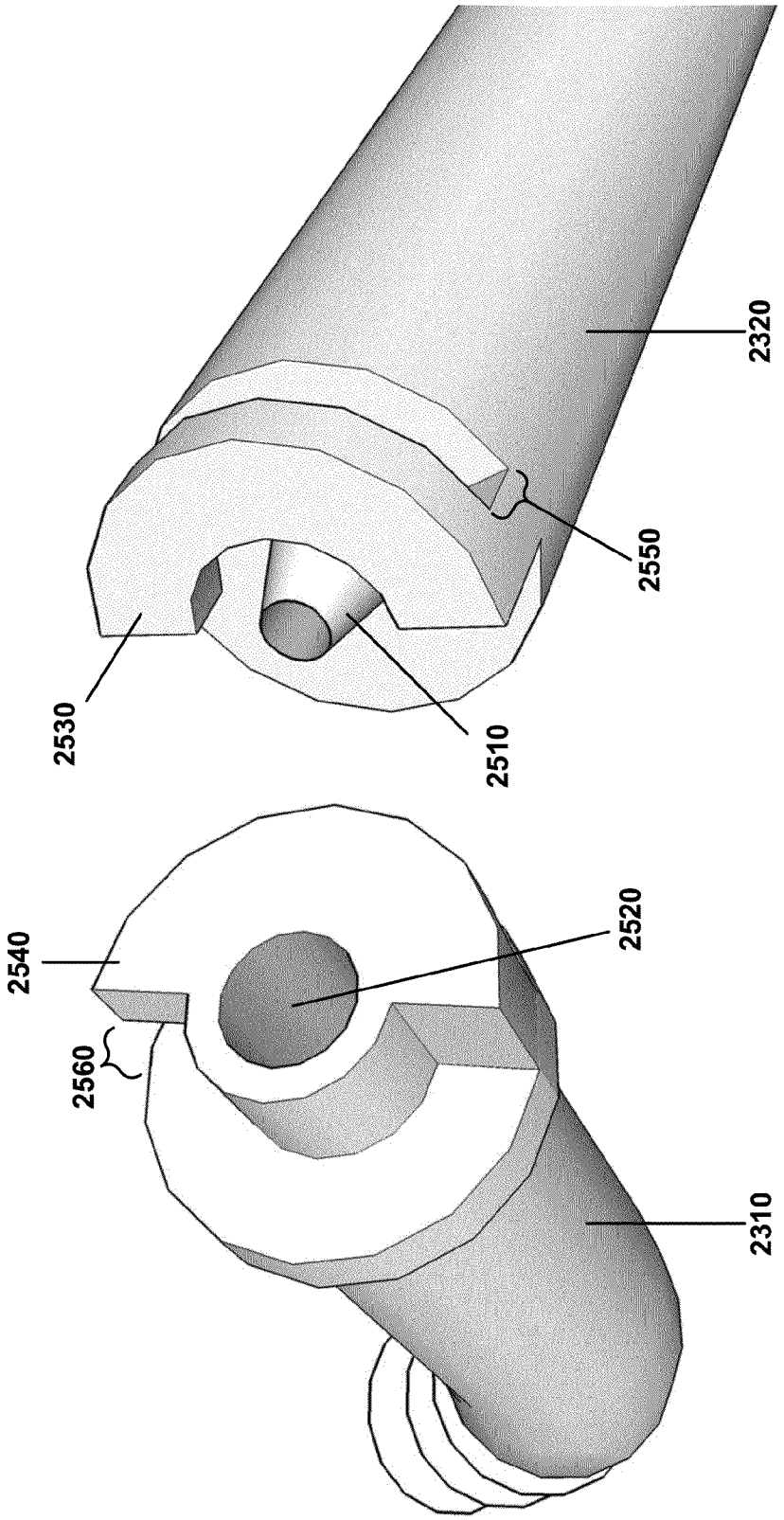

Figure 25D

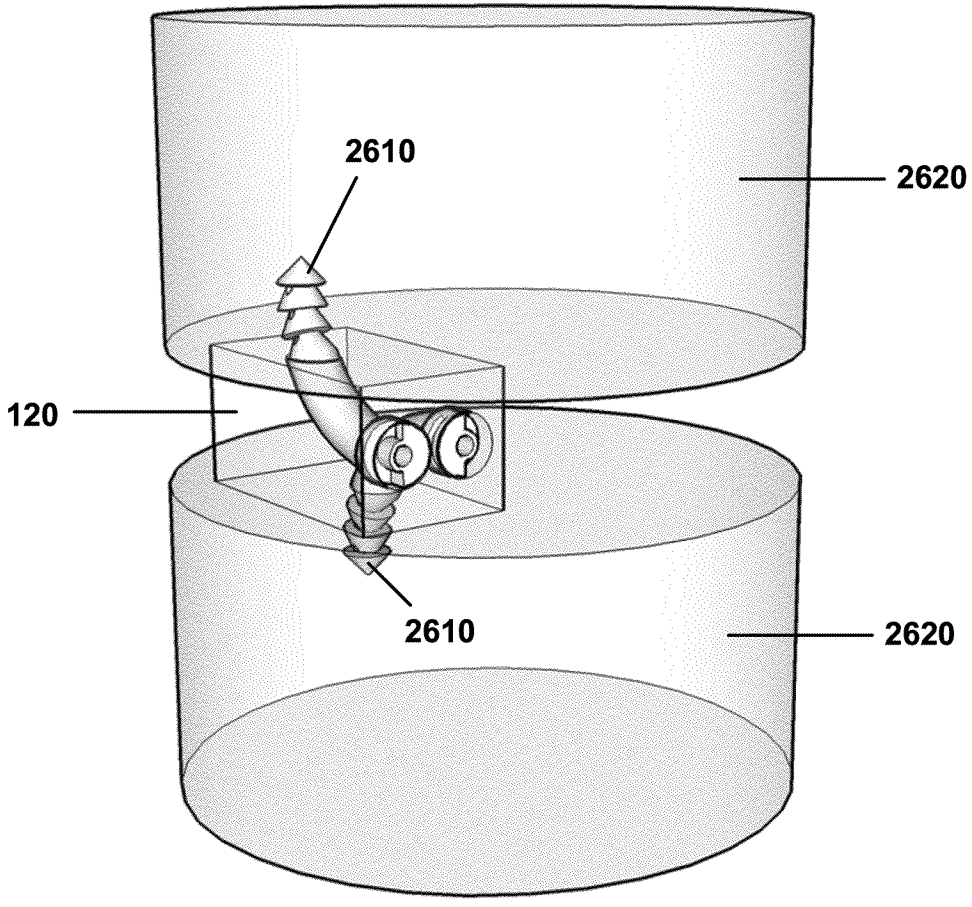

Figure 26A

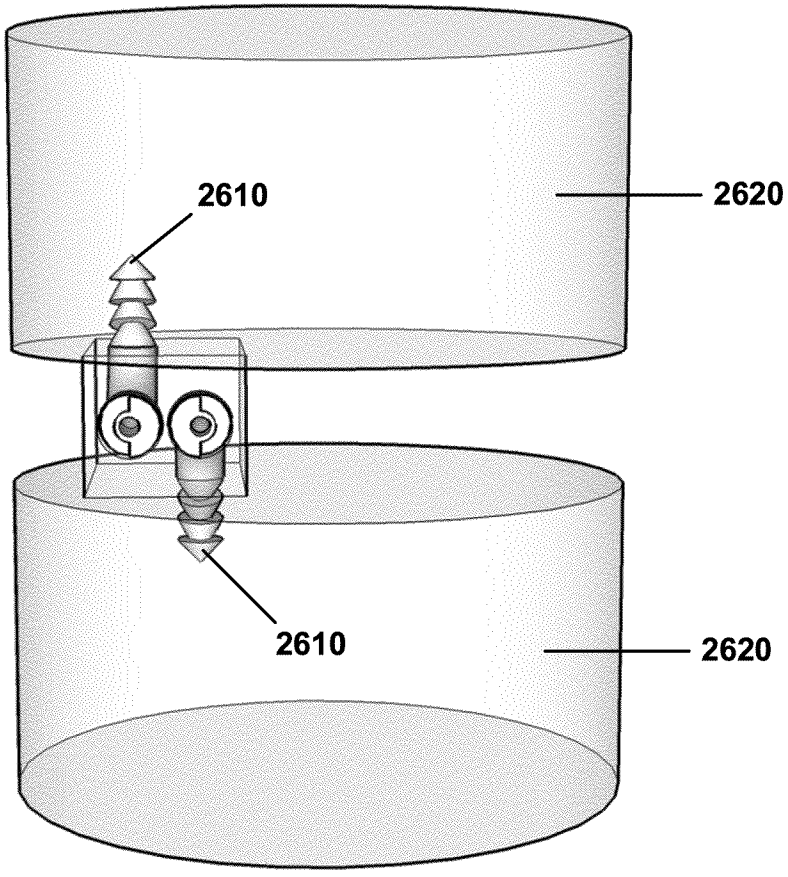

Figure 26B

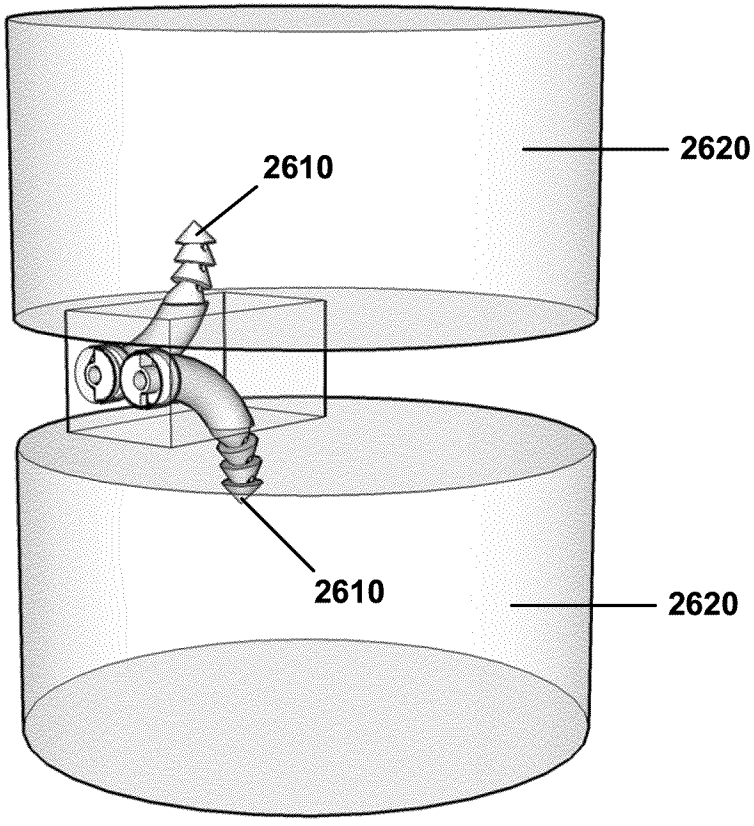

Figure 26C

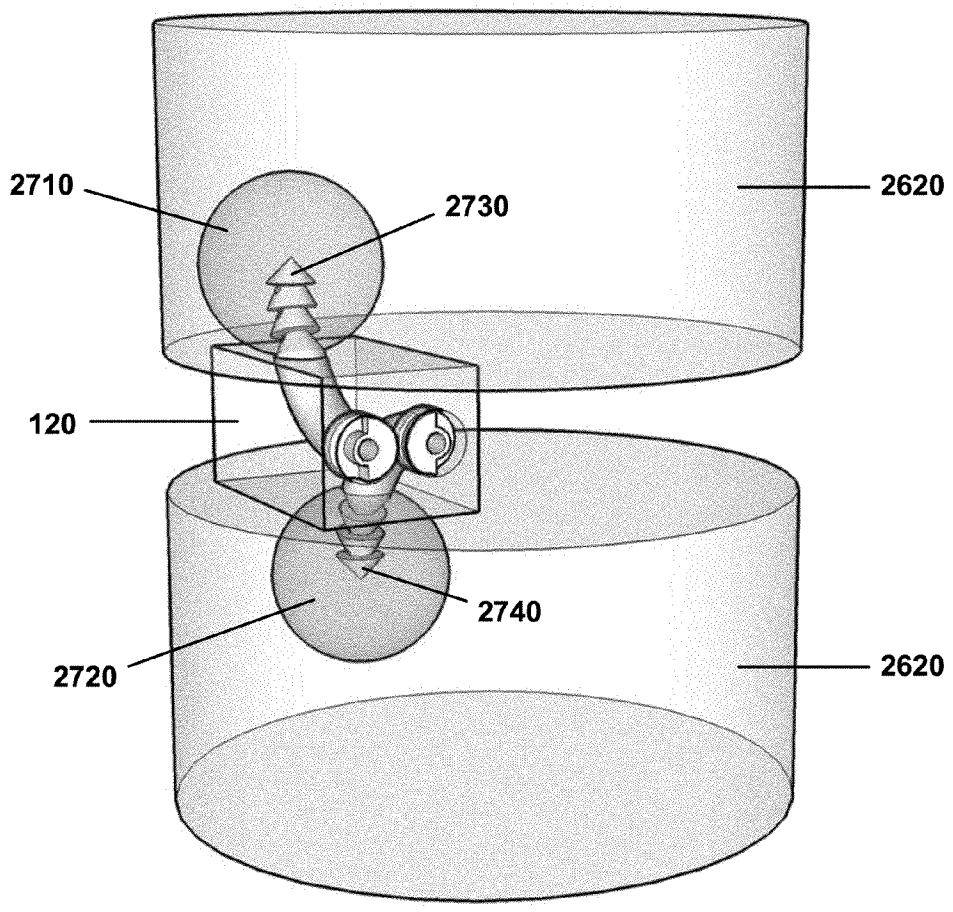

Figure 27A

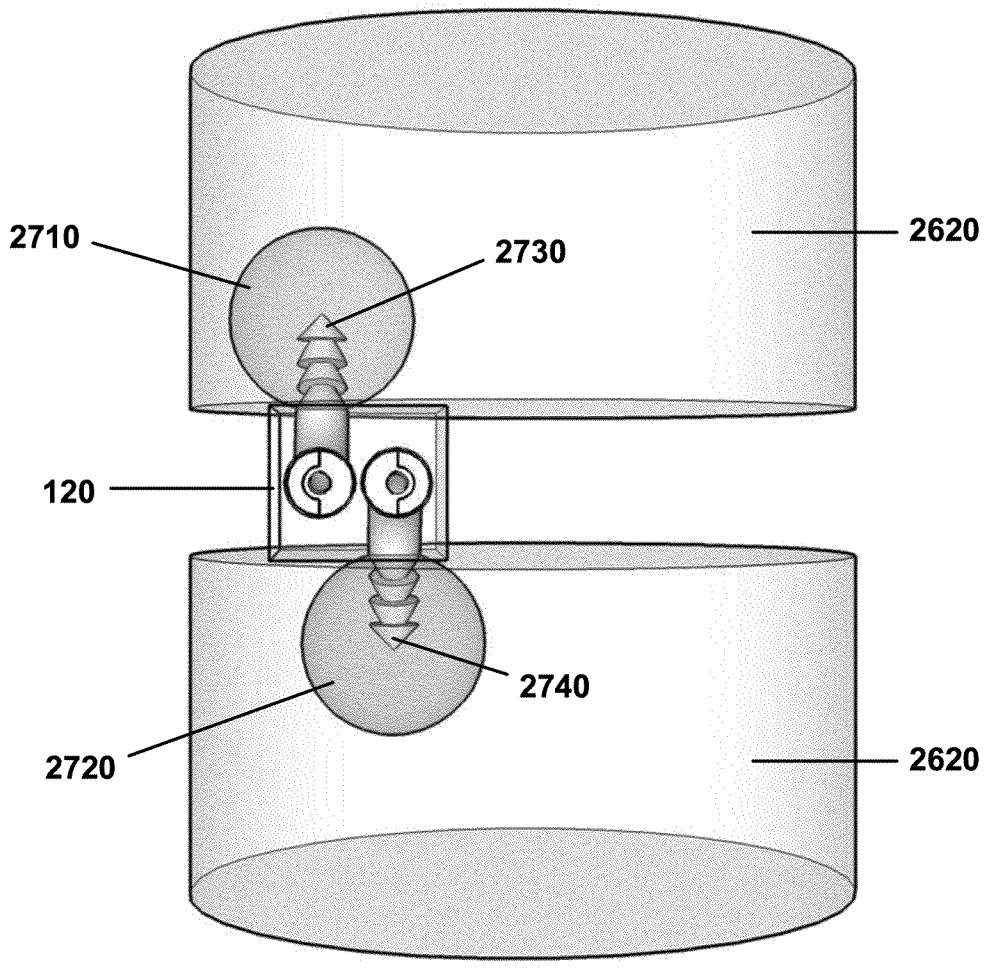

Figure 27B

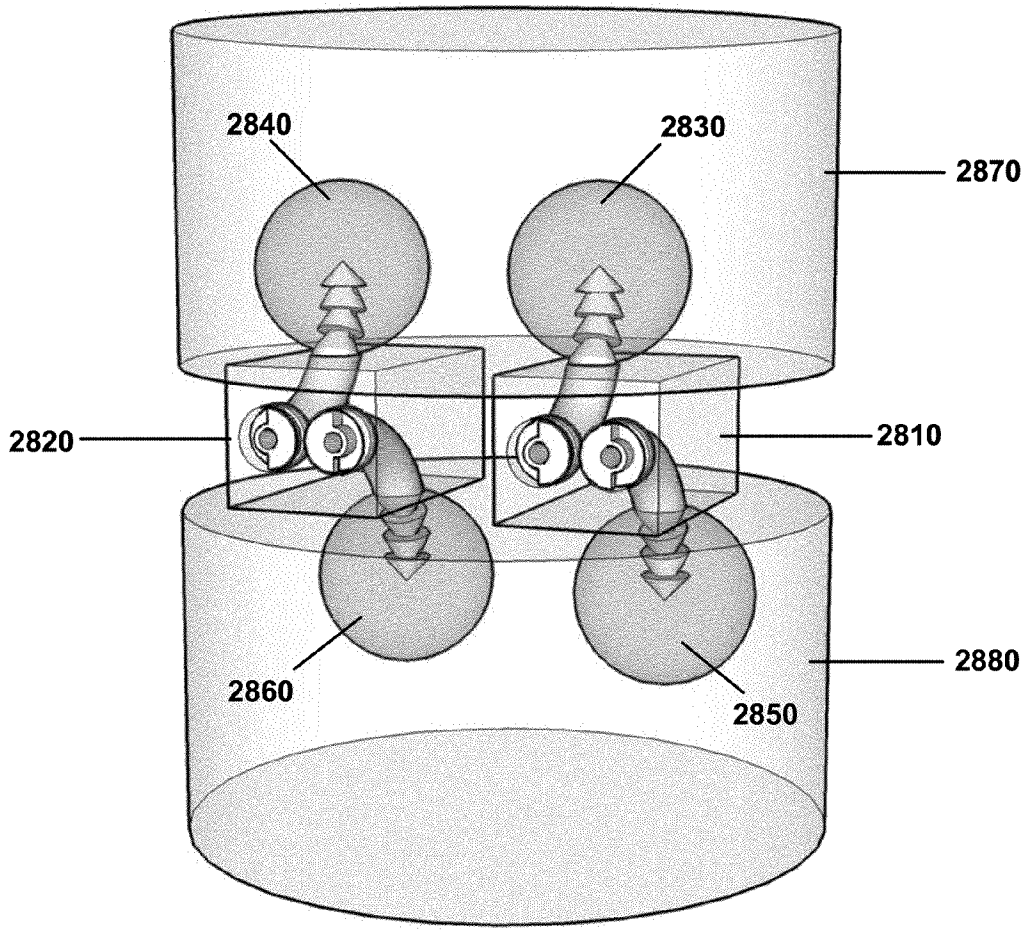

Figure 28A

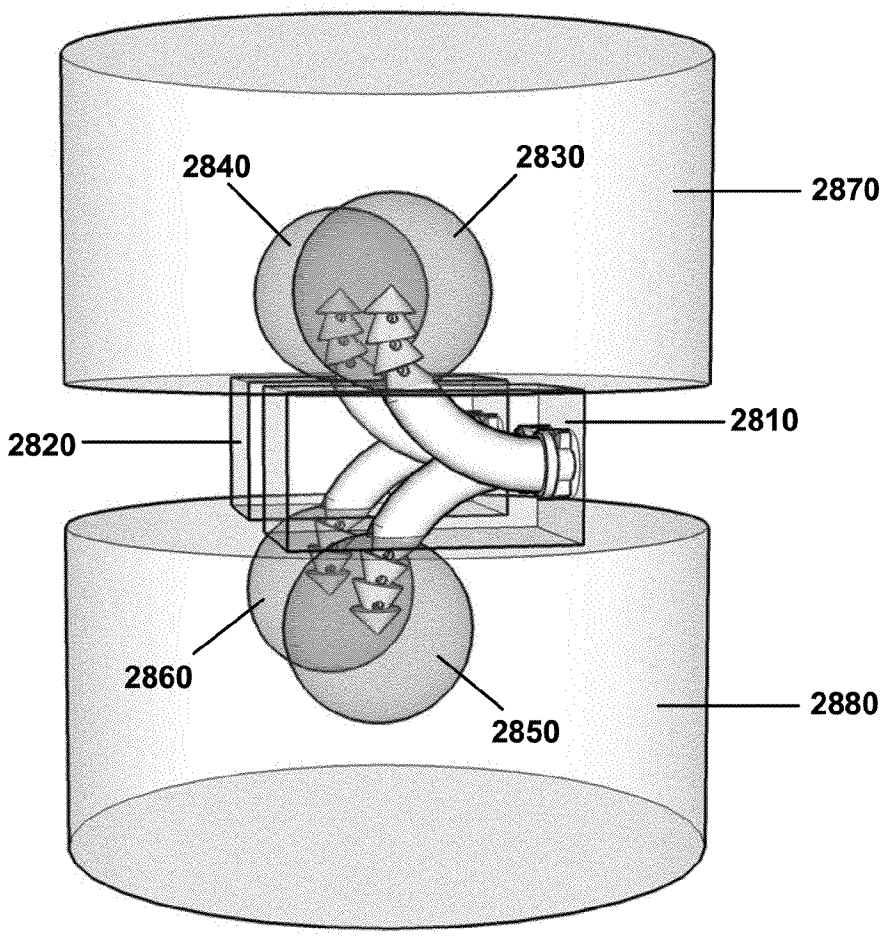

Figure 28B

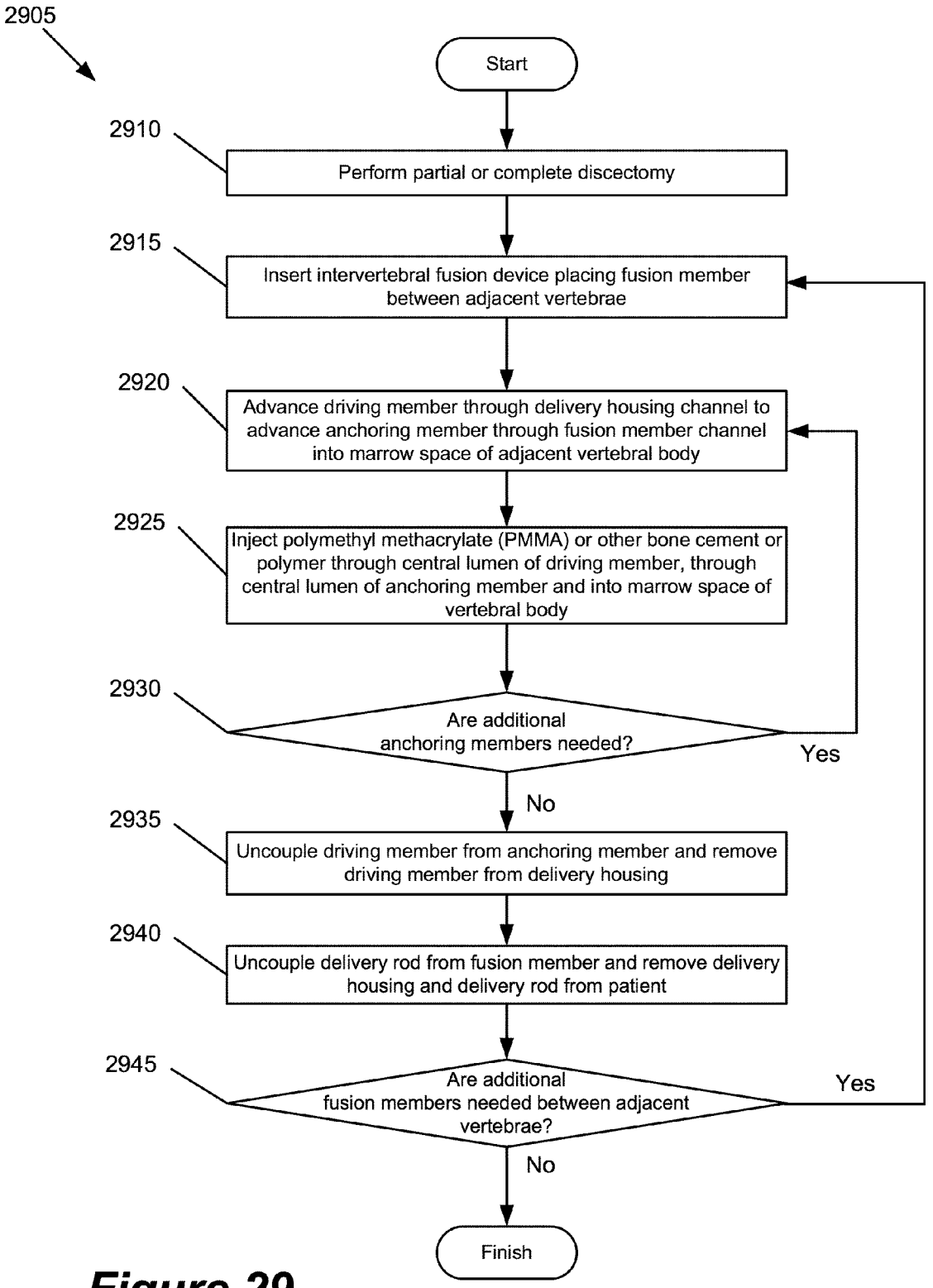
2905
Start
2910
Perform partial or complete discectomy
2915
Insert intervertebral fusion device placing fusion member between adjacent vertebrae
2920
Advance driving member through delivery housing channel to advance anchoring member through fusion member channel into marrow space of adjacent vertebral body
2925
Inject polymethyl methacrylate (PMMA) or other bone cement or polymer through central lumen of driving member, through central lumen of anchoring member and into marrow space of vertebral body
2930
Are additional anchoring members needed?
Yes
No
2935
Uncouple driving member from anchoring member and remove driving member from delivery housing
2940
Uncouple delivery rod from fusion member and remove delivery housing and delivery rod from patient
2945
Are additional fusion members needed between adjacent vertebrae?
Yes
No
Finish

Figure 29

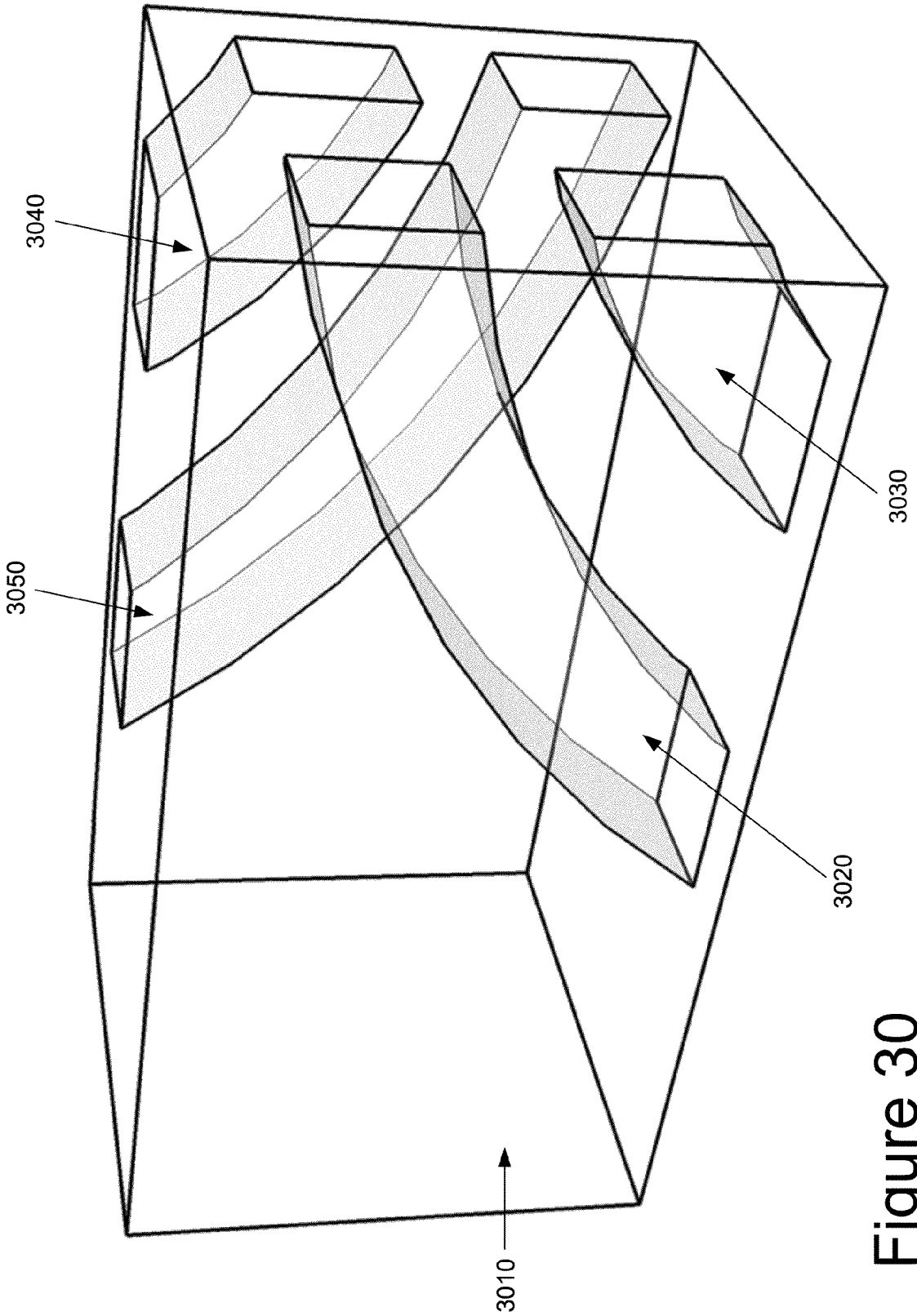

Figure 30

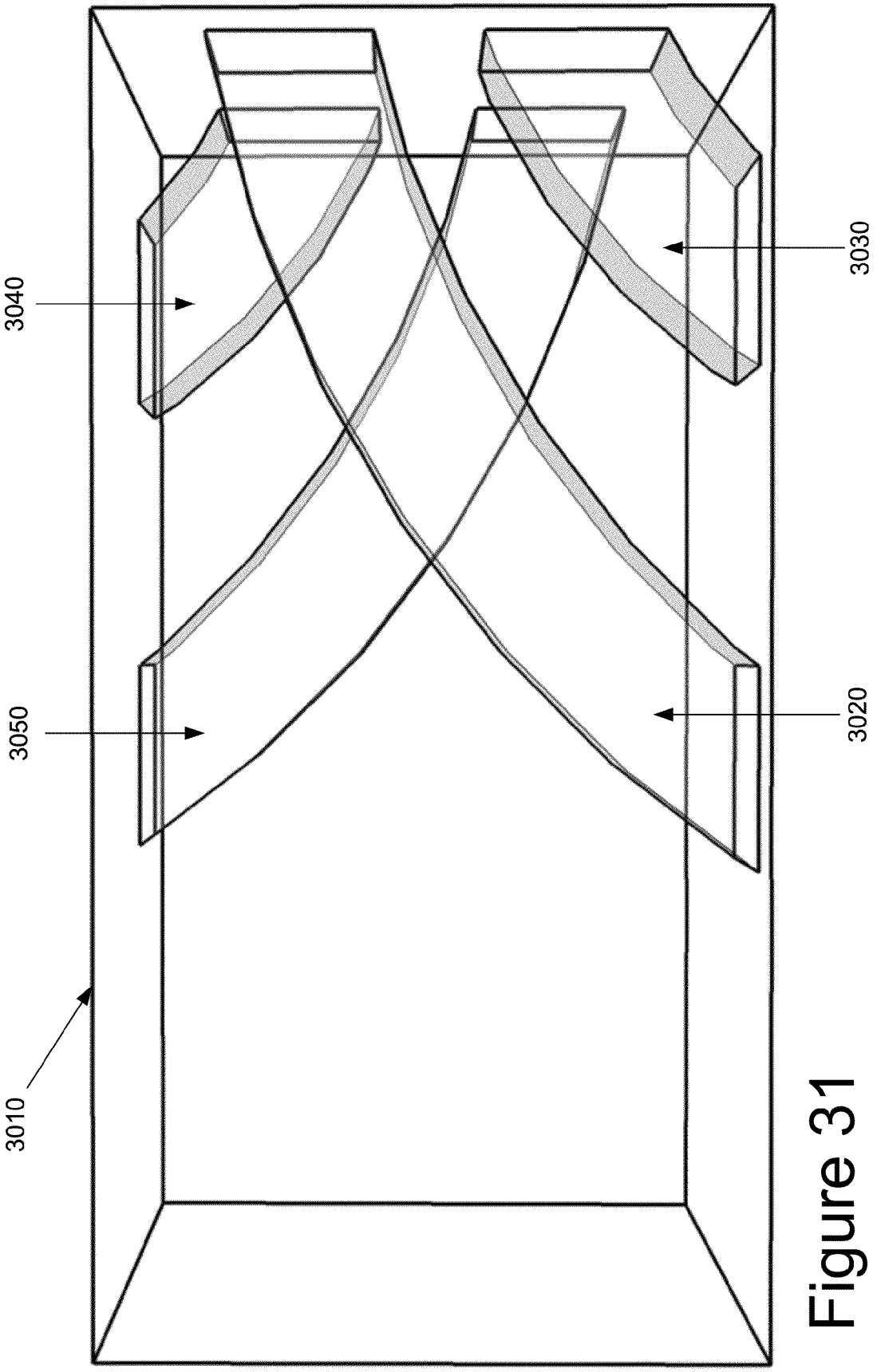

Figure 31

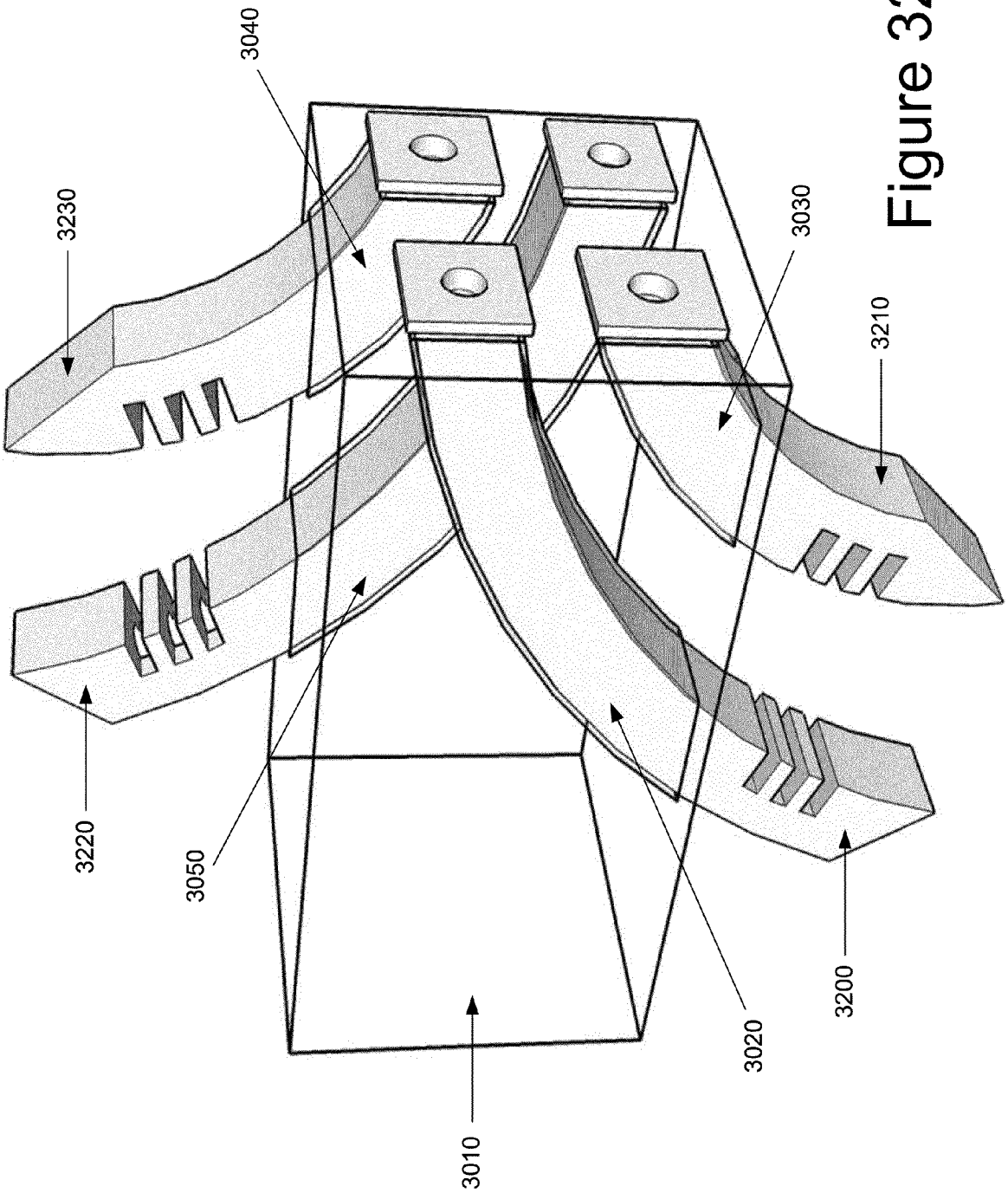

Figure 32

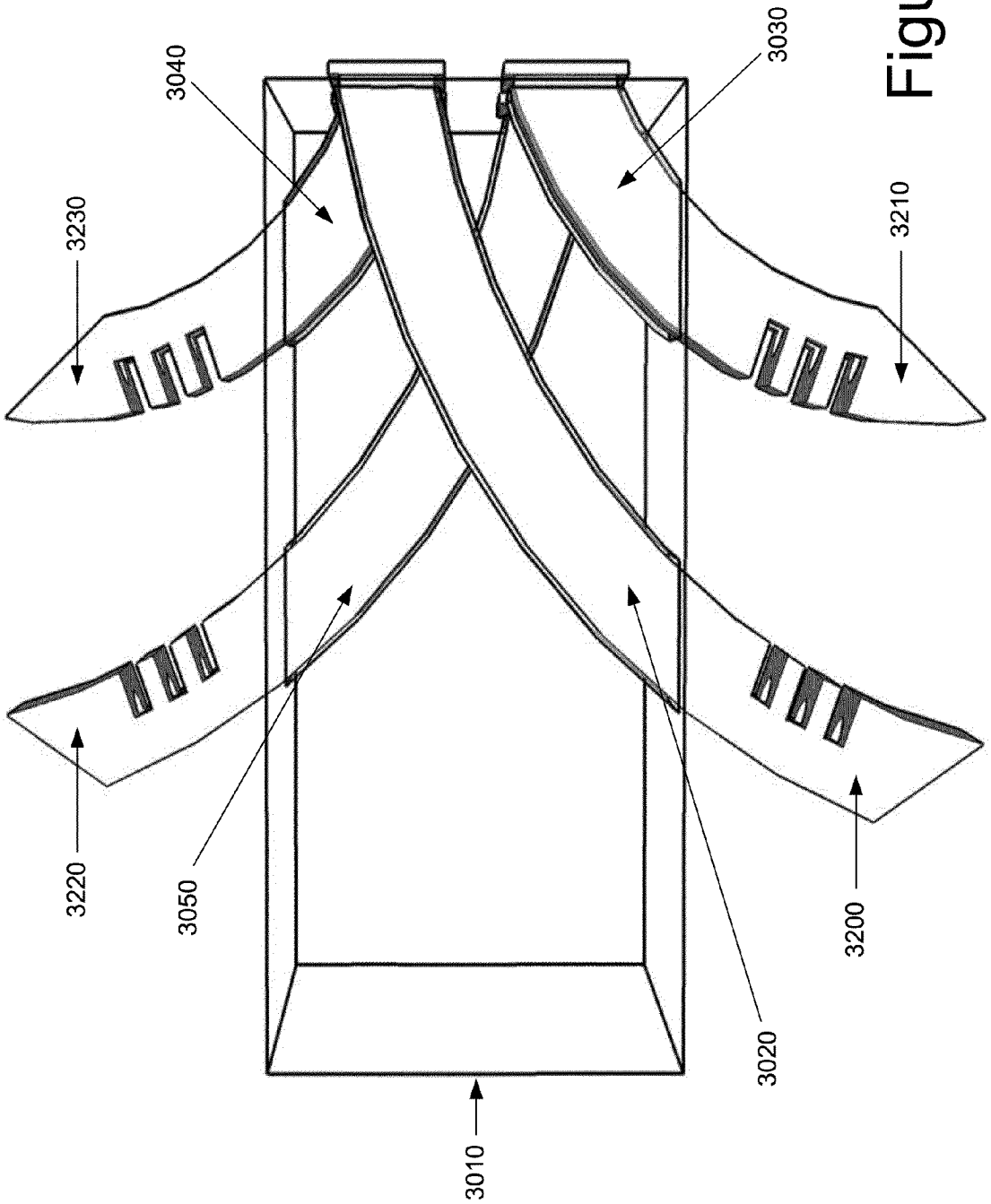

Figure 33

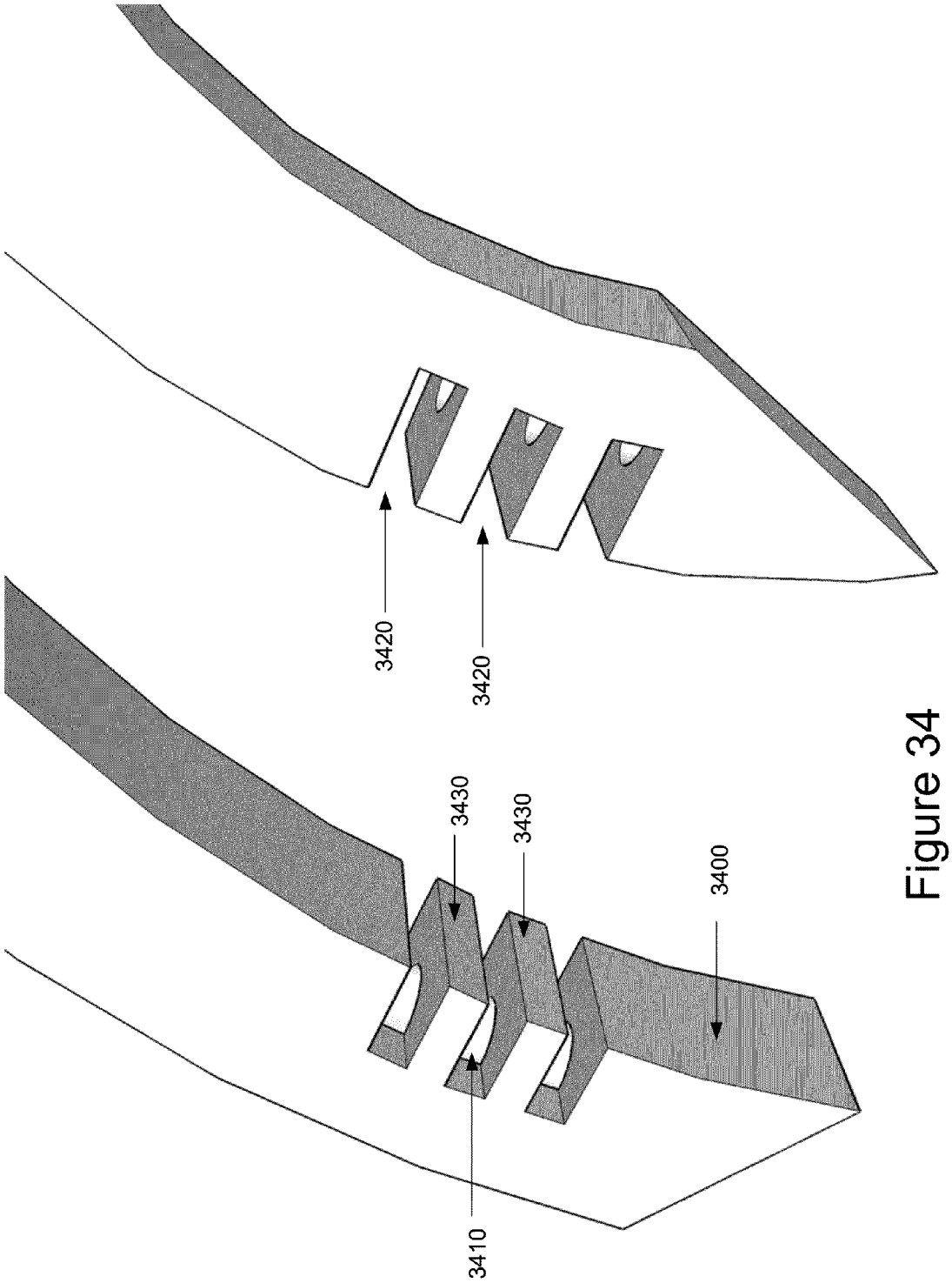

Figure 34

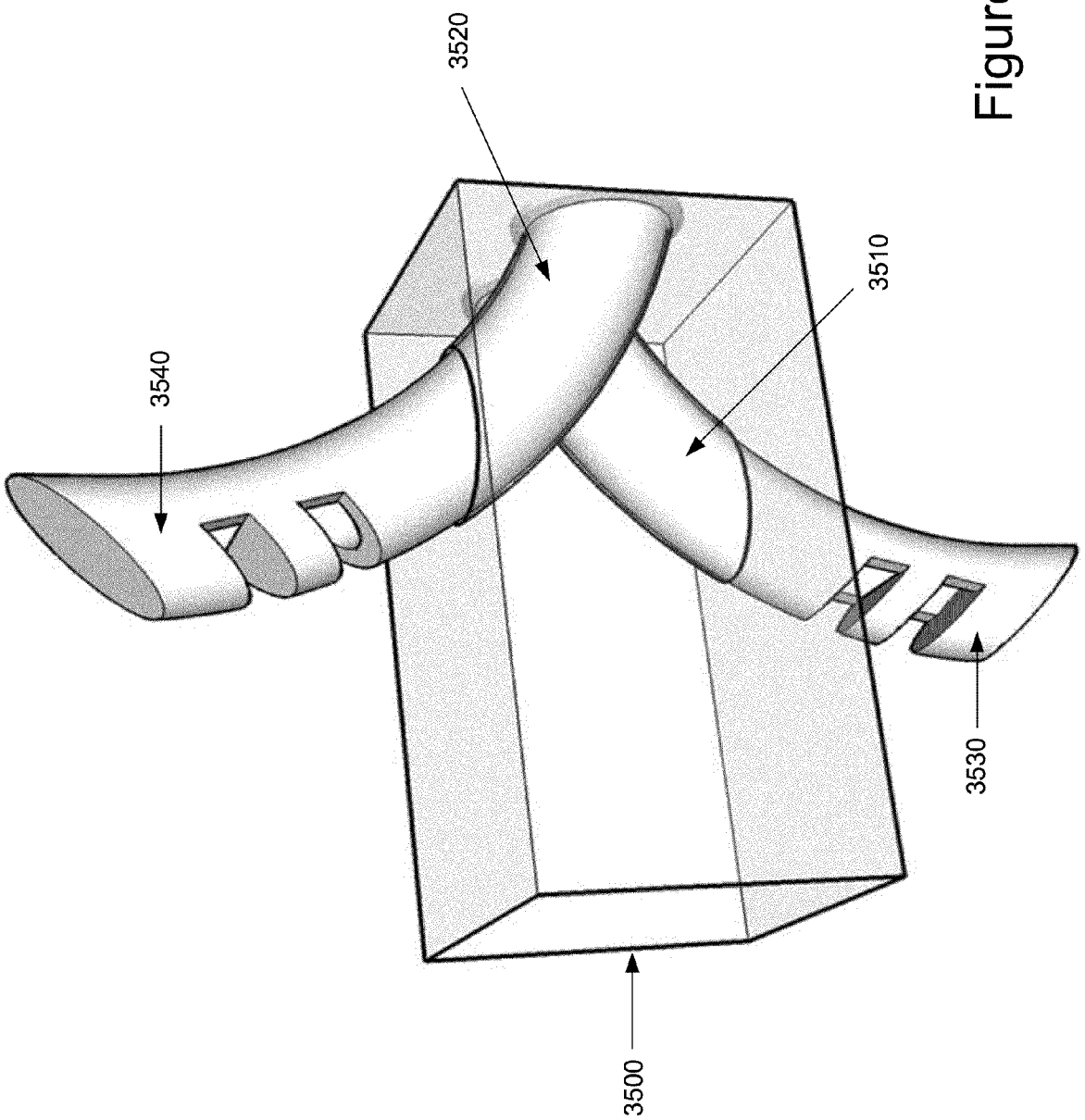

Figure 35

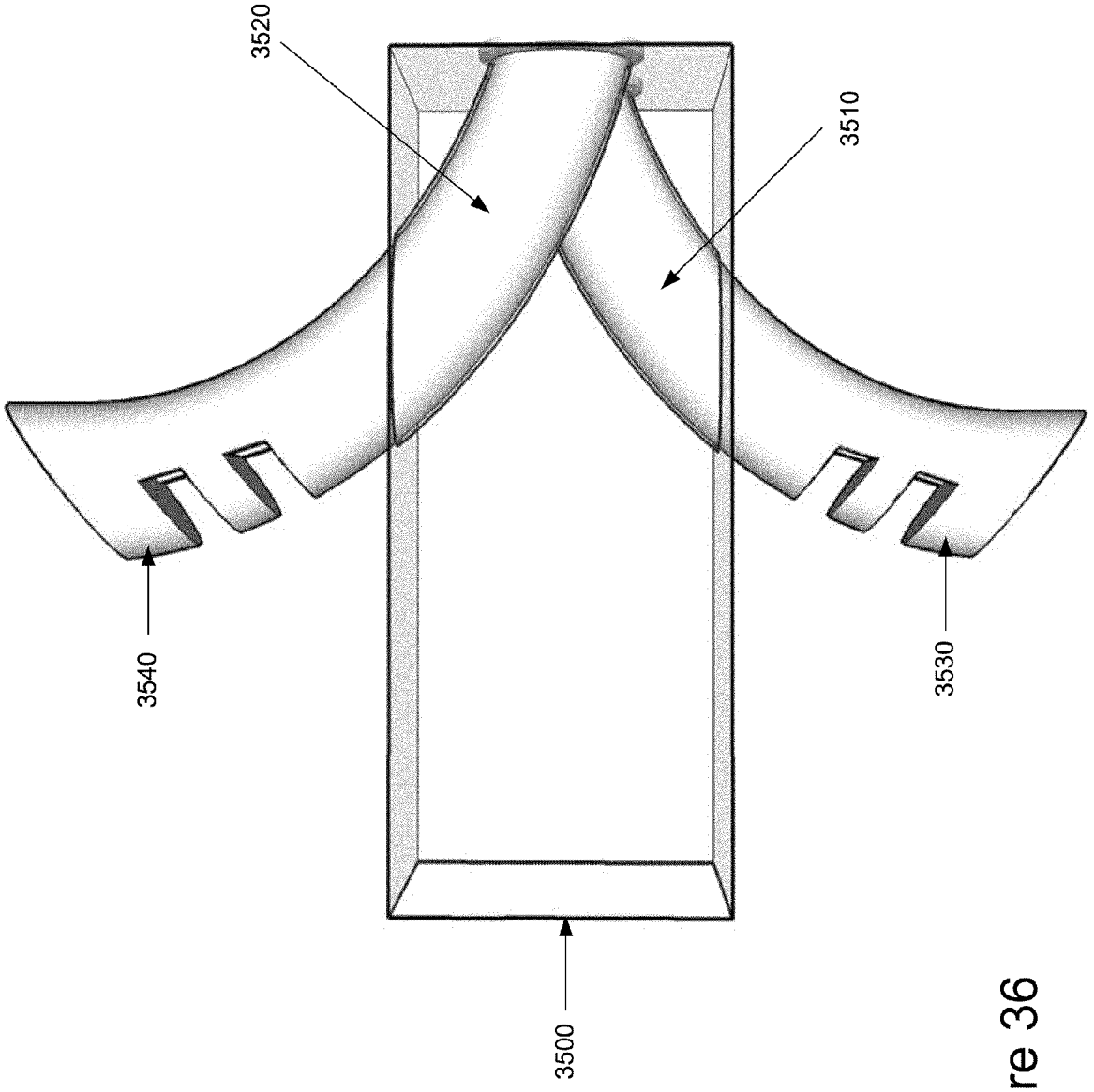

Figure 36

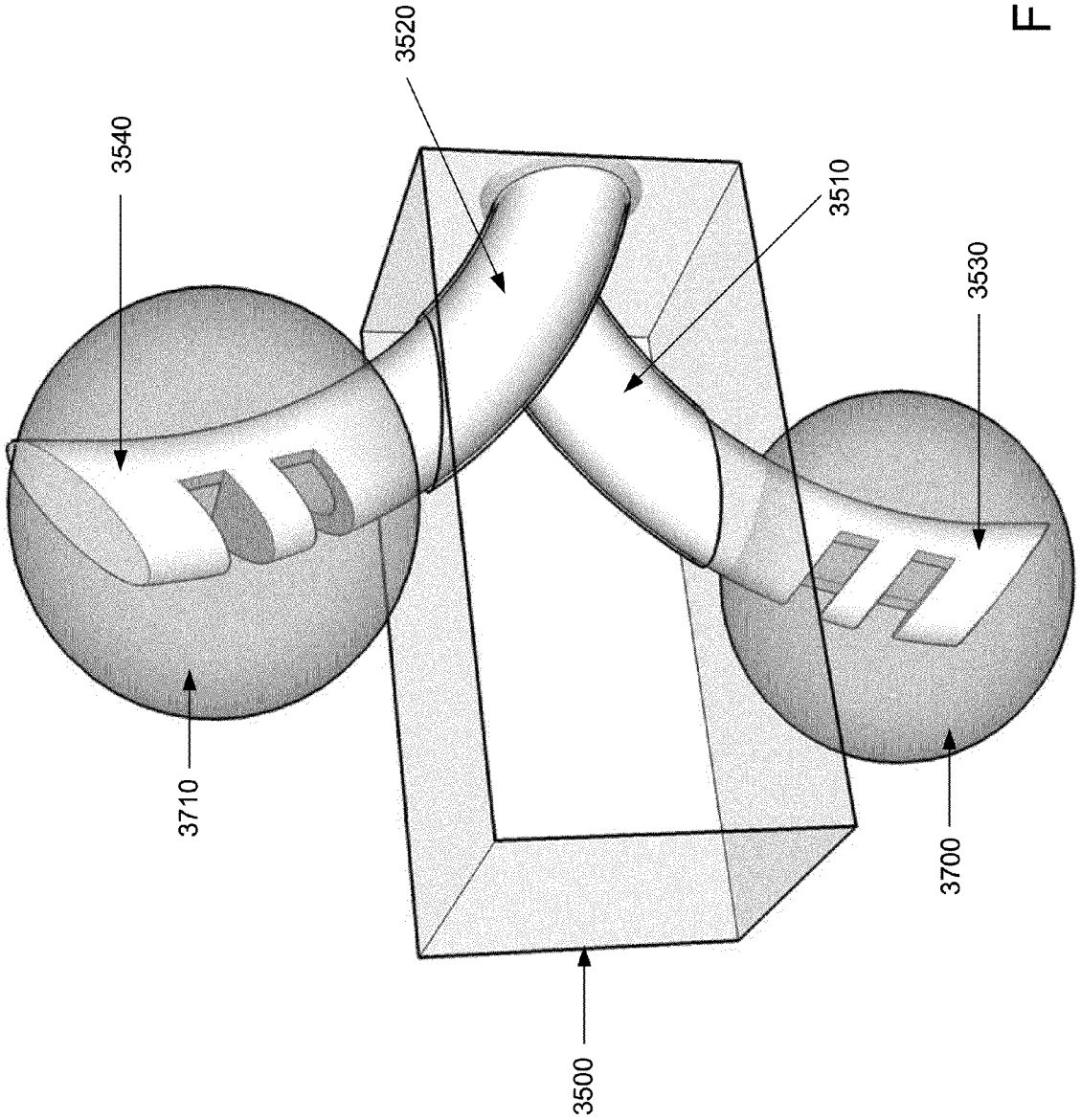

Figure 37

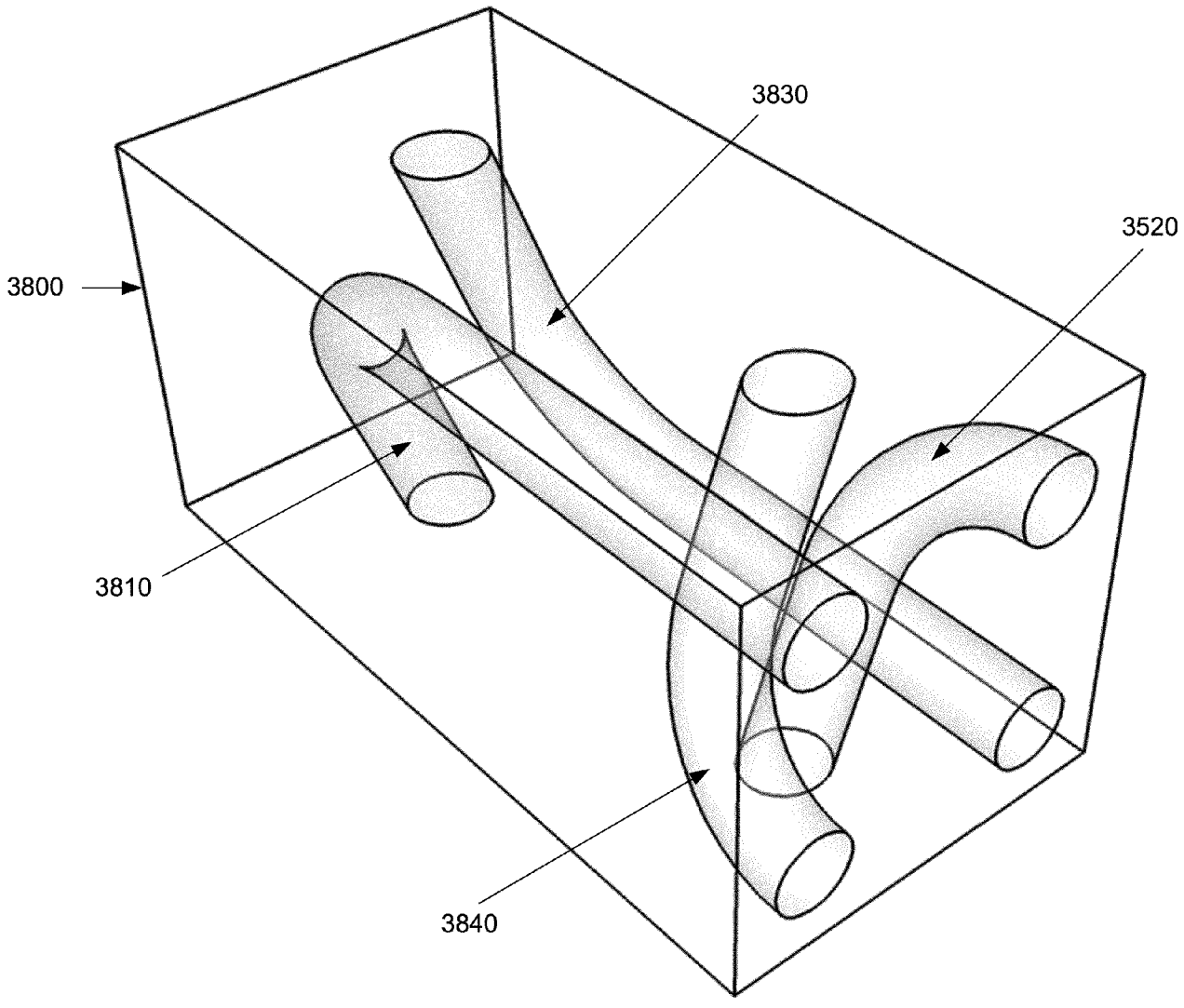

Figure 38

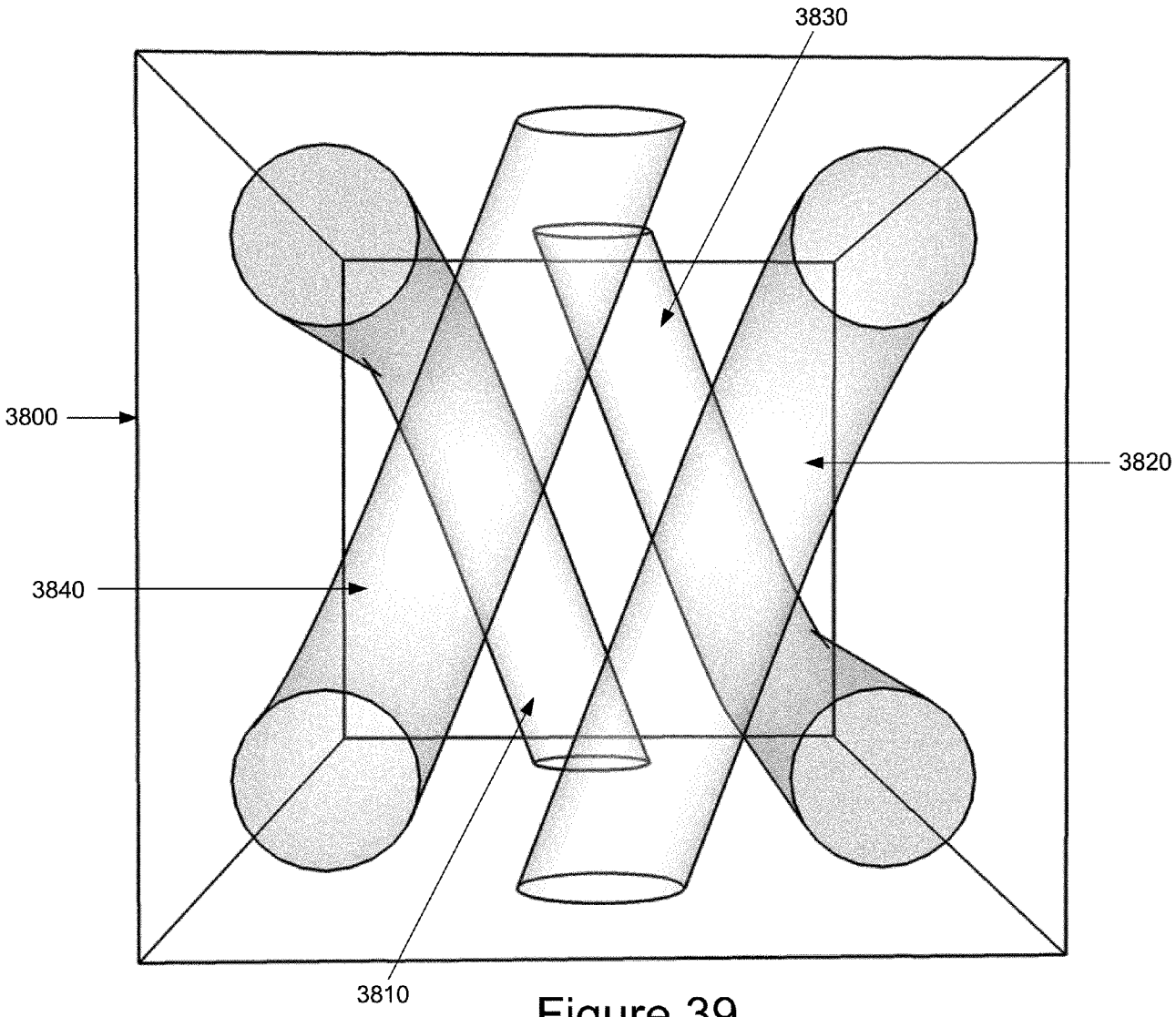

Figure 39

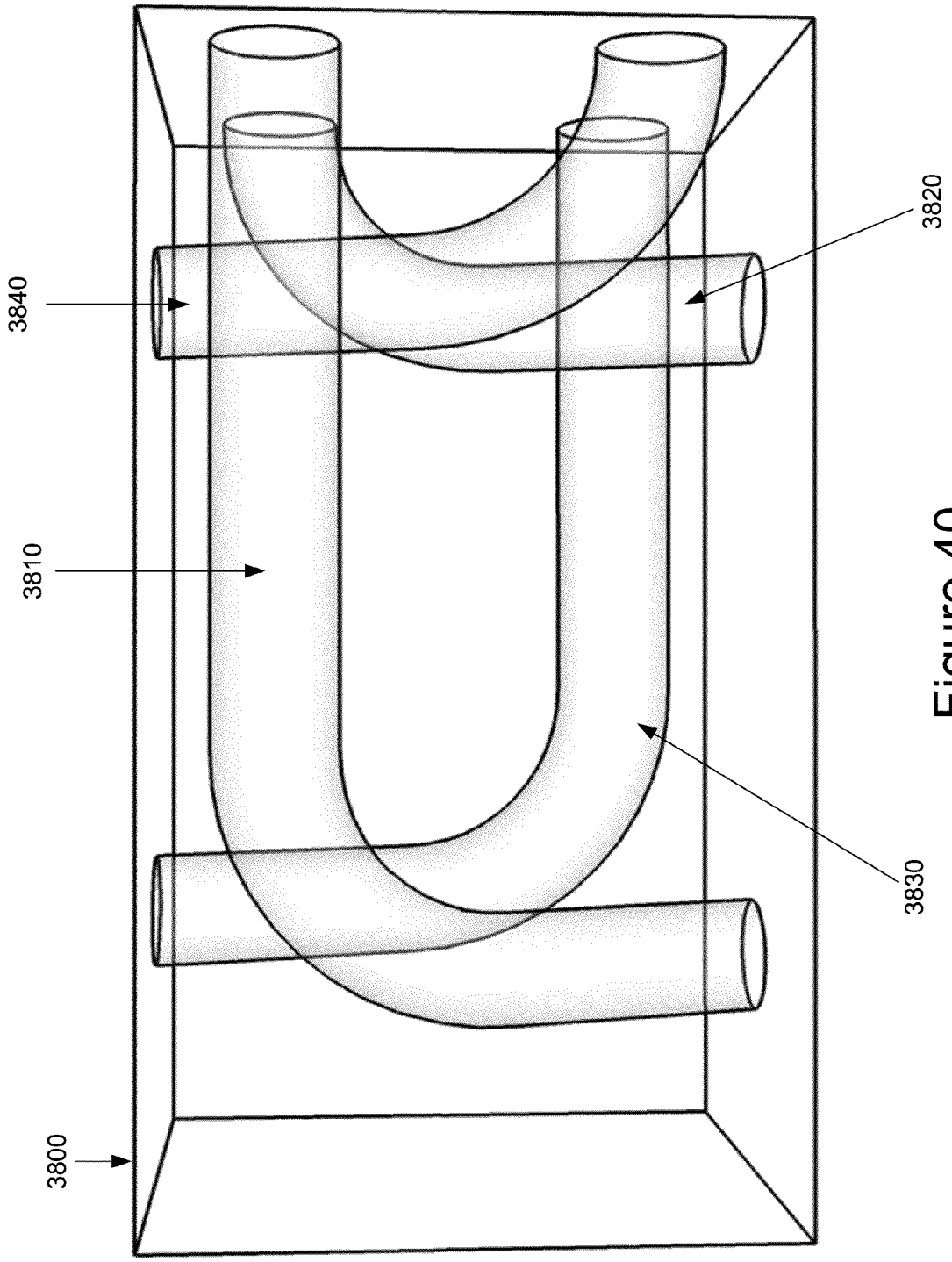

Figure 40

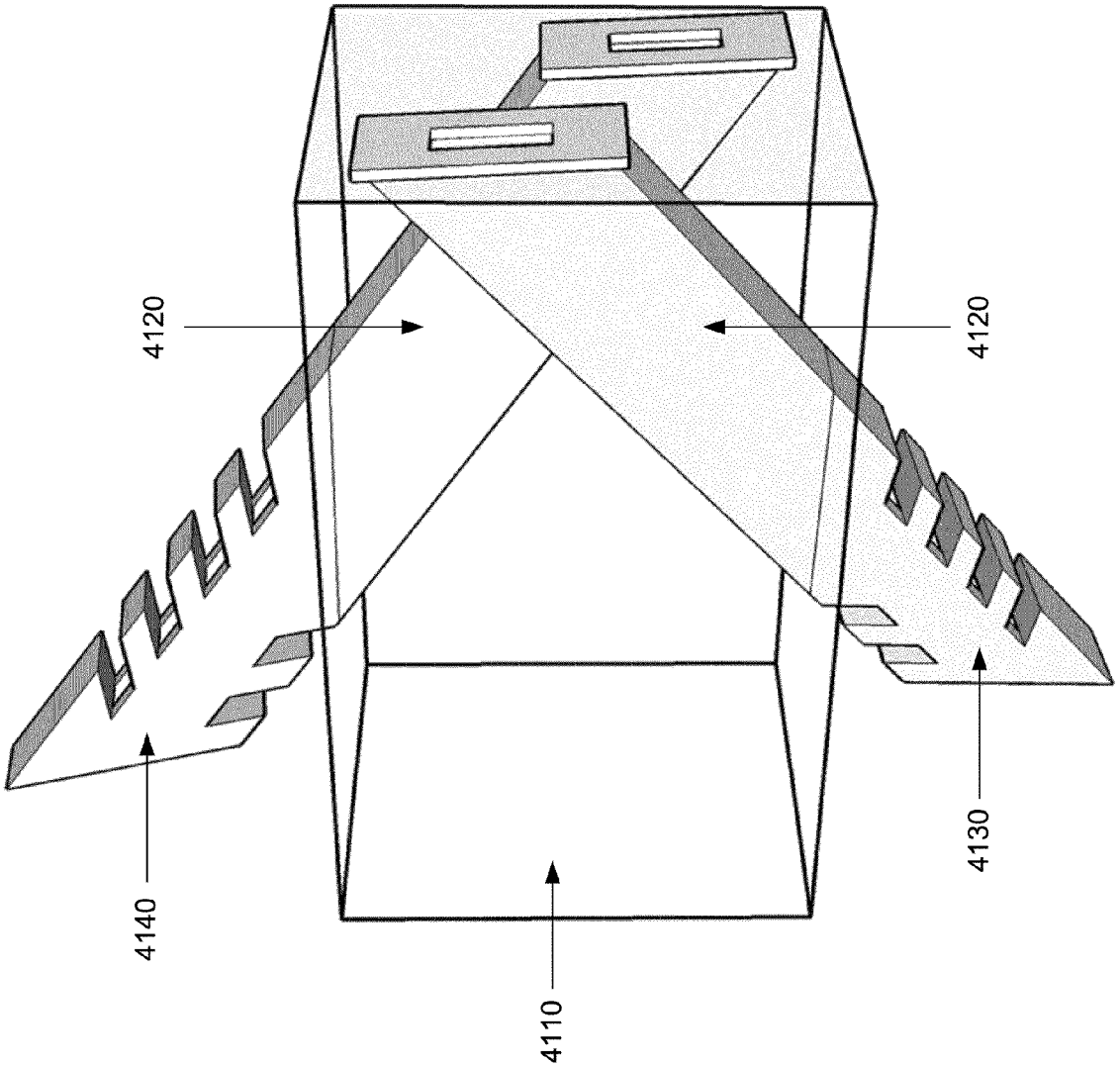

Figure 41

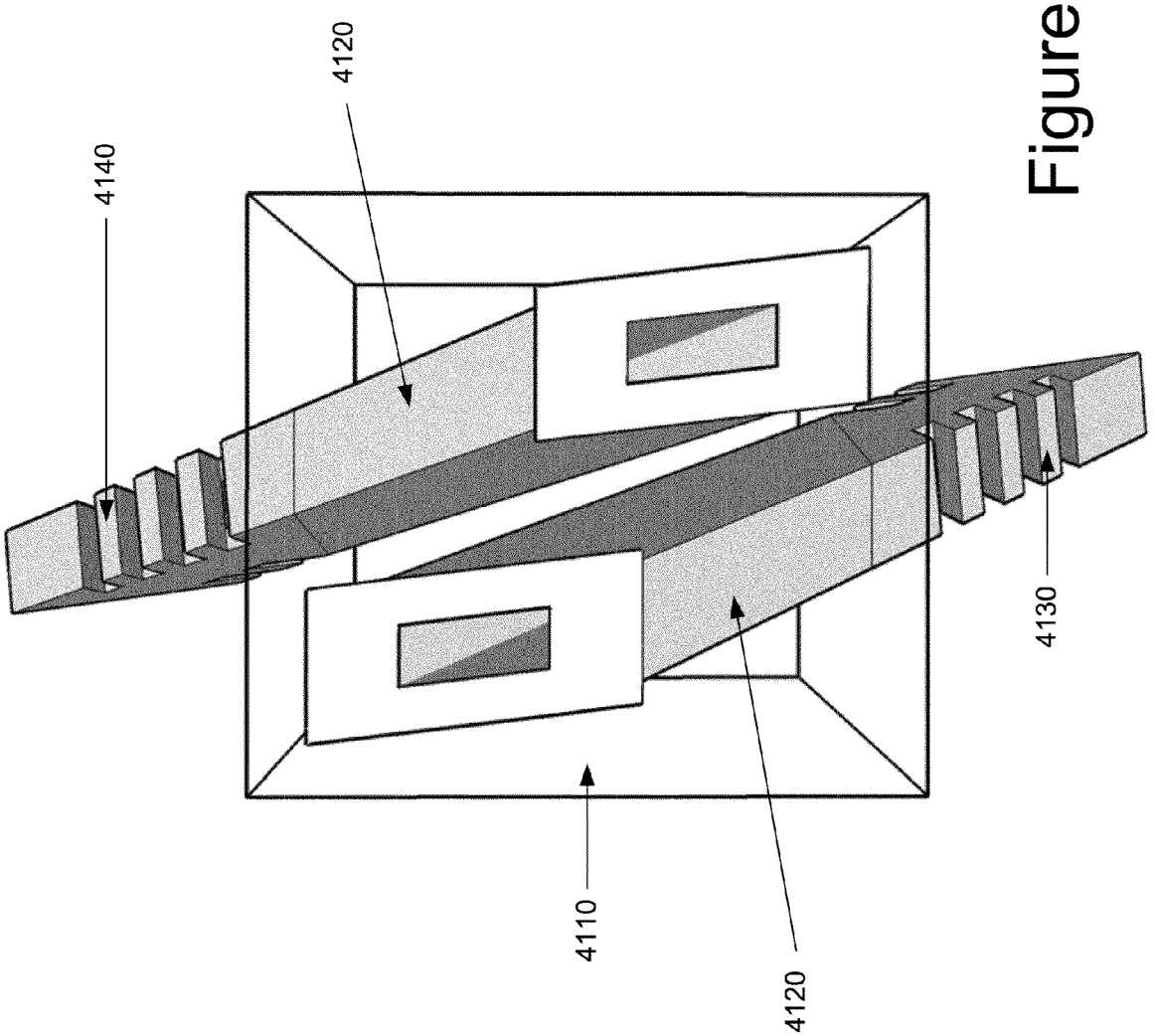

Figure 42

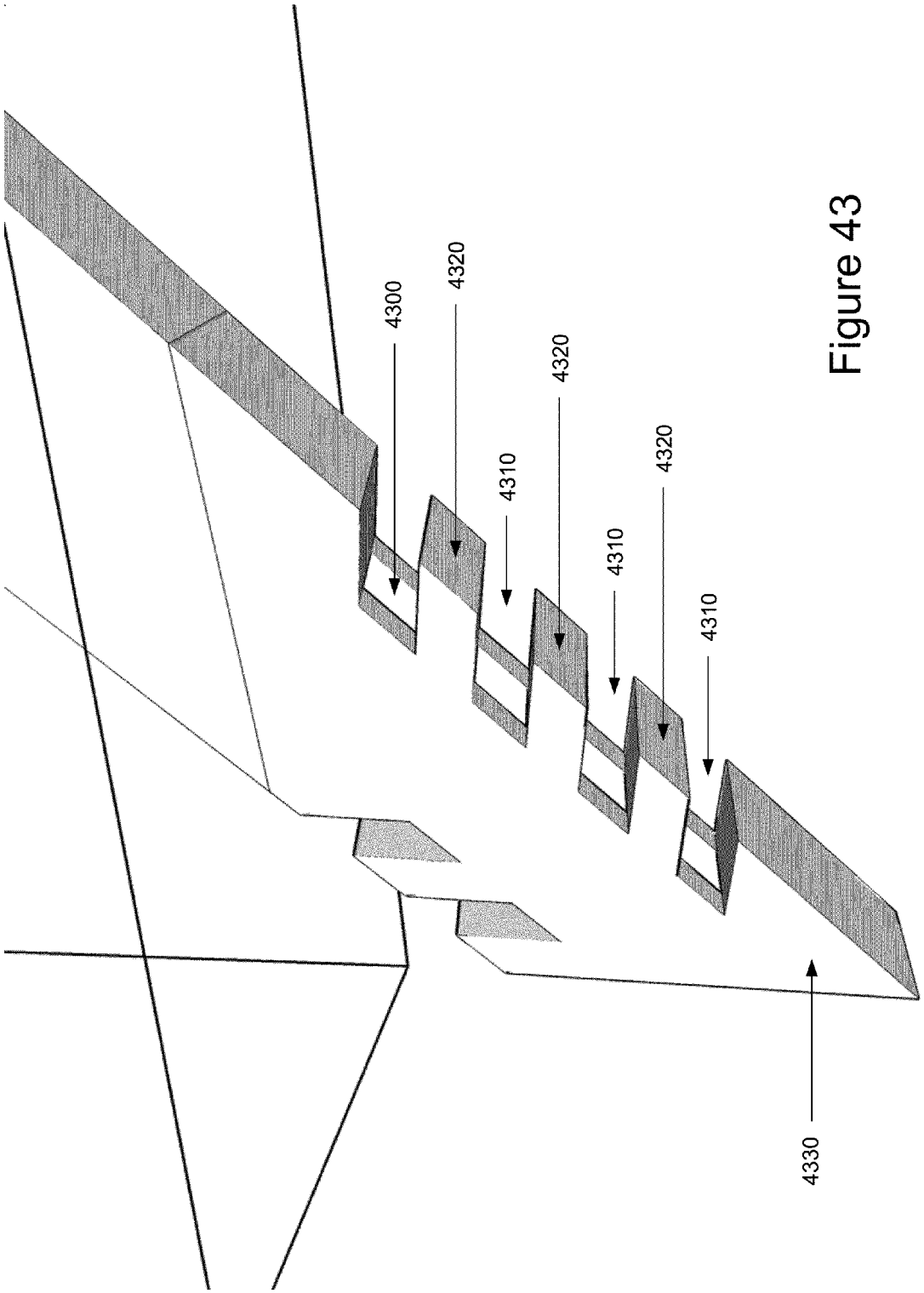

Figure 43

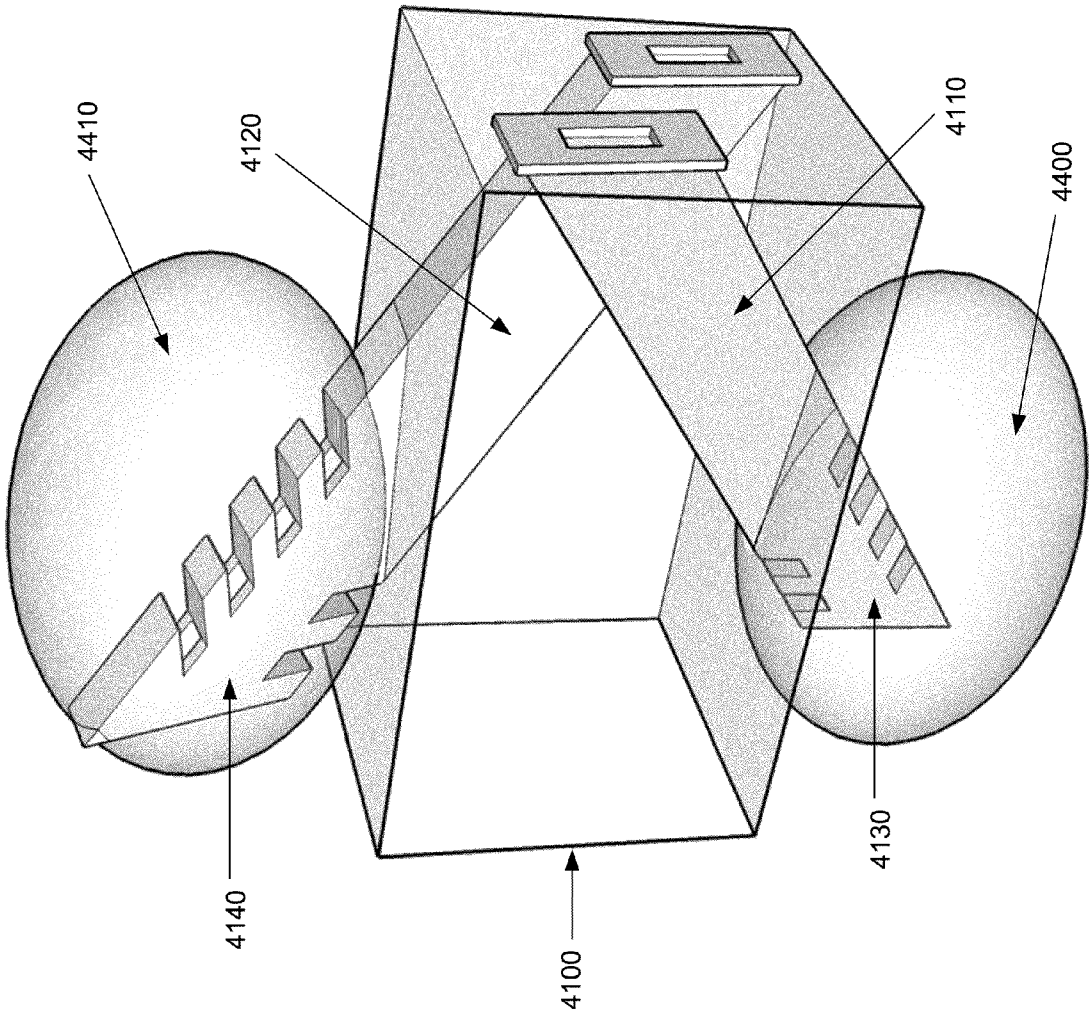

Figure 44

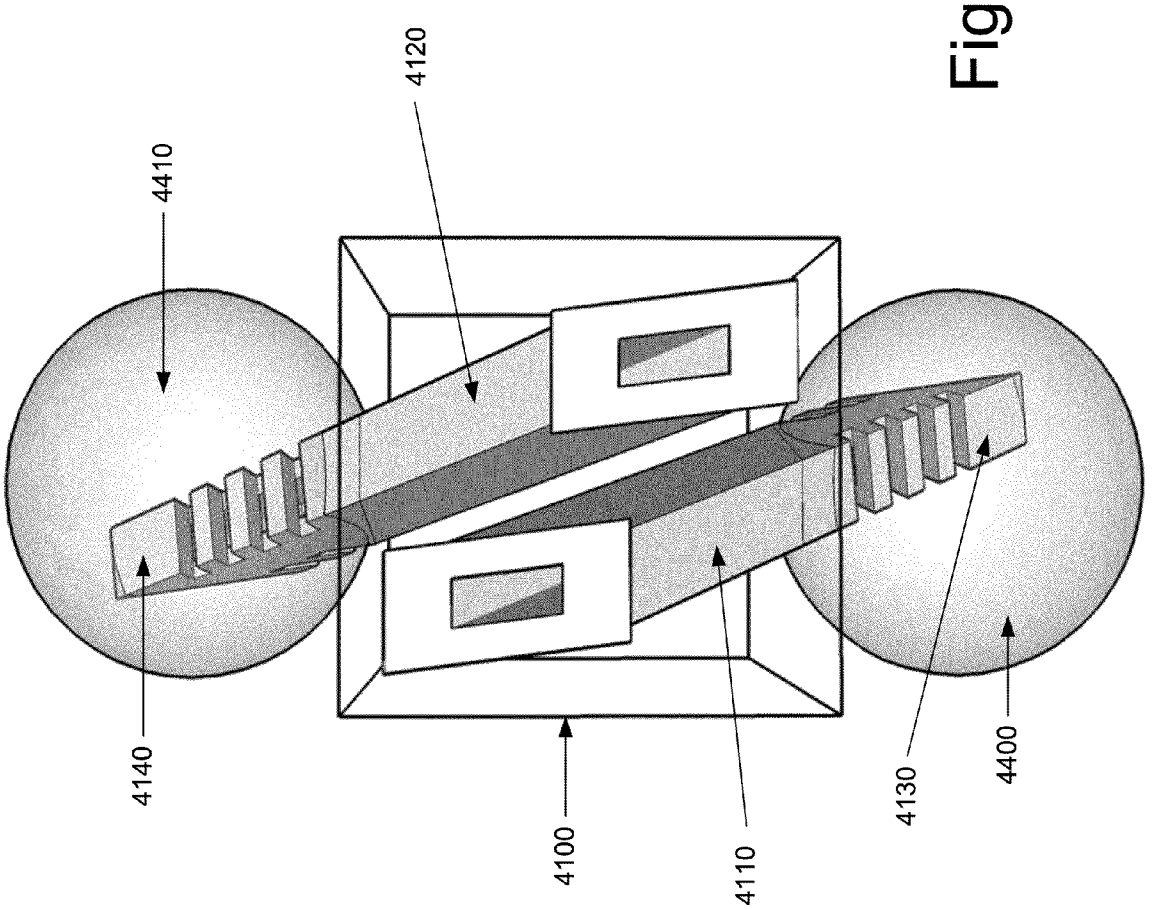

Figure 45

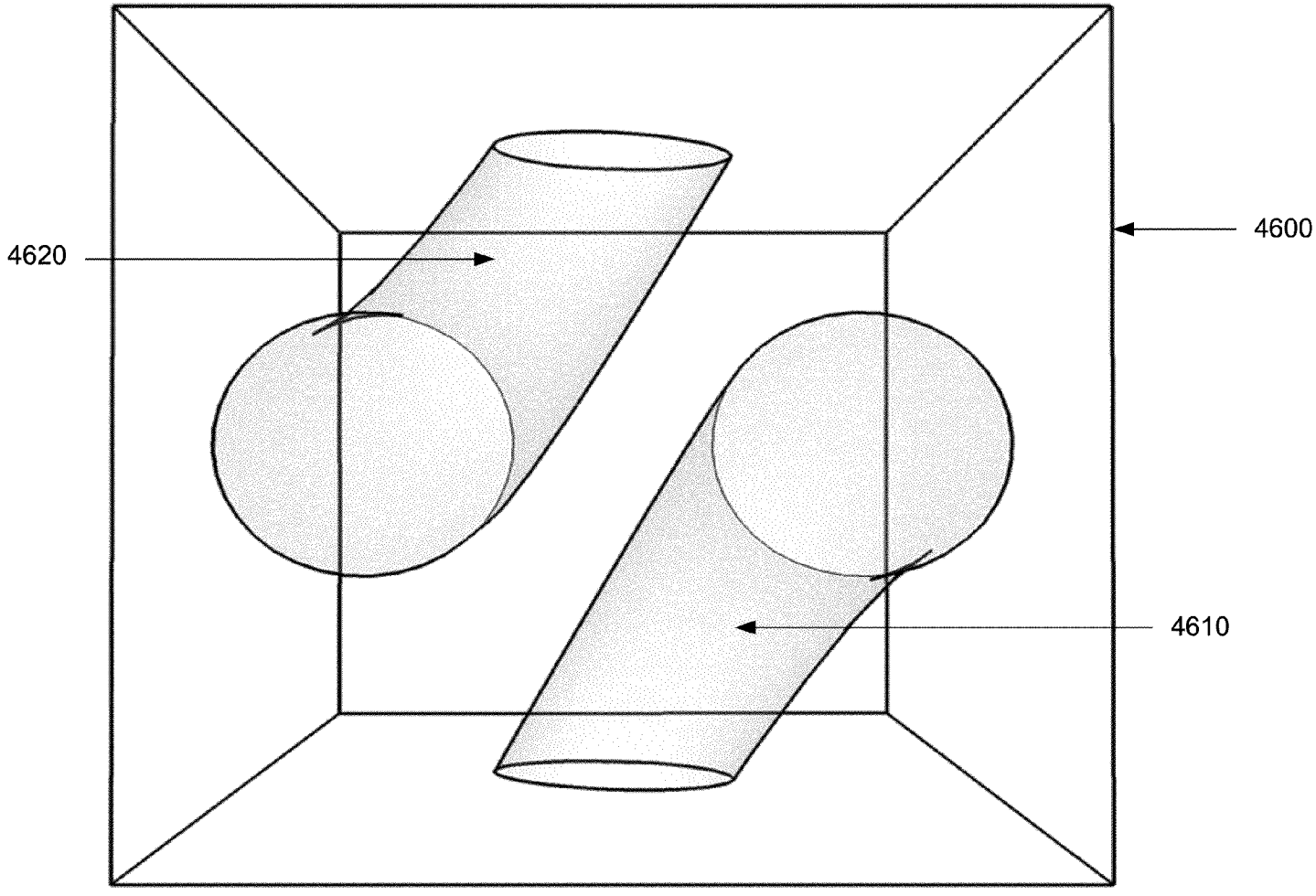

Figure 46A

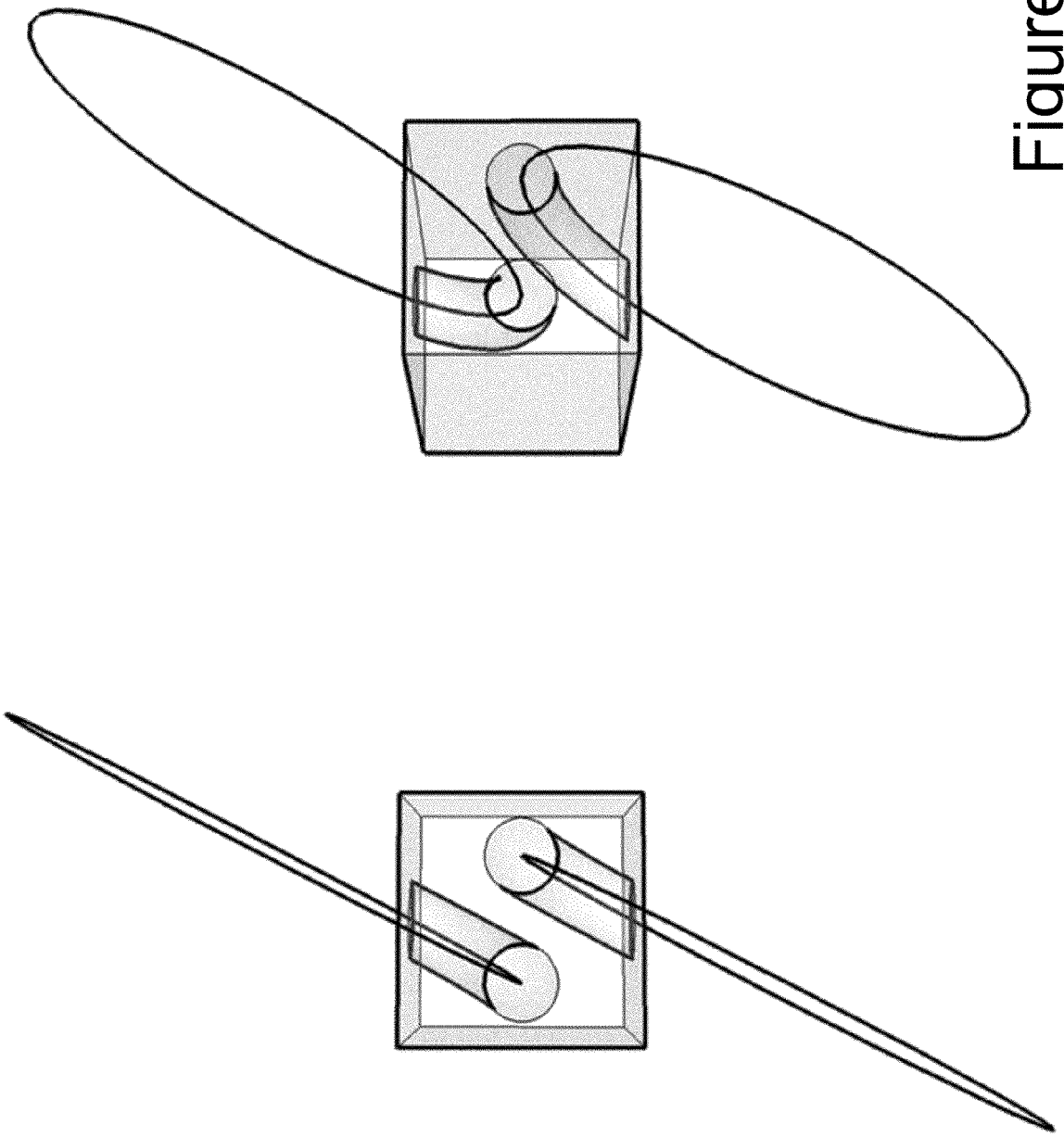

Figure 46B

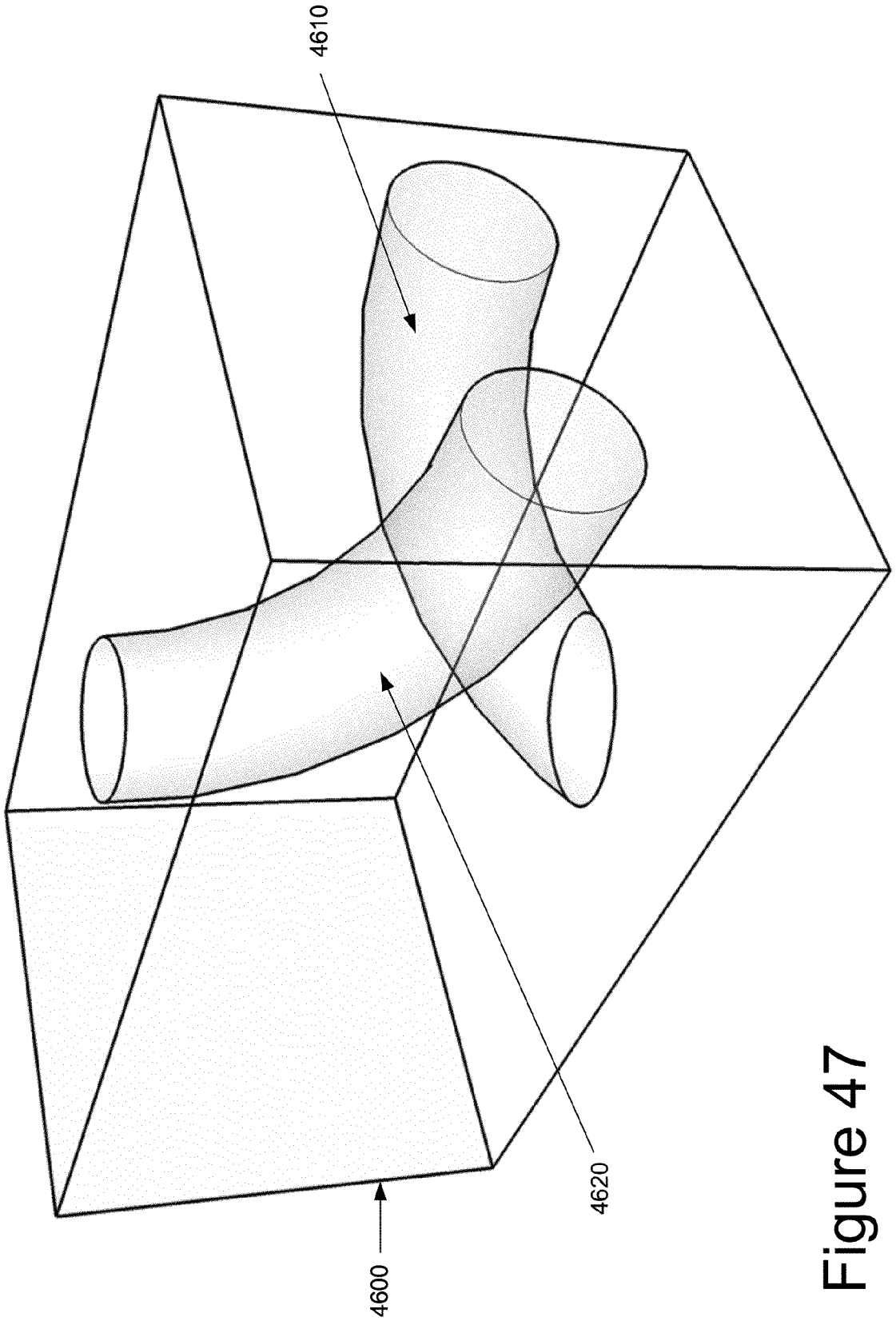

Figure 47

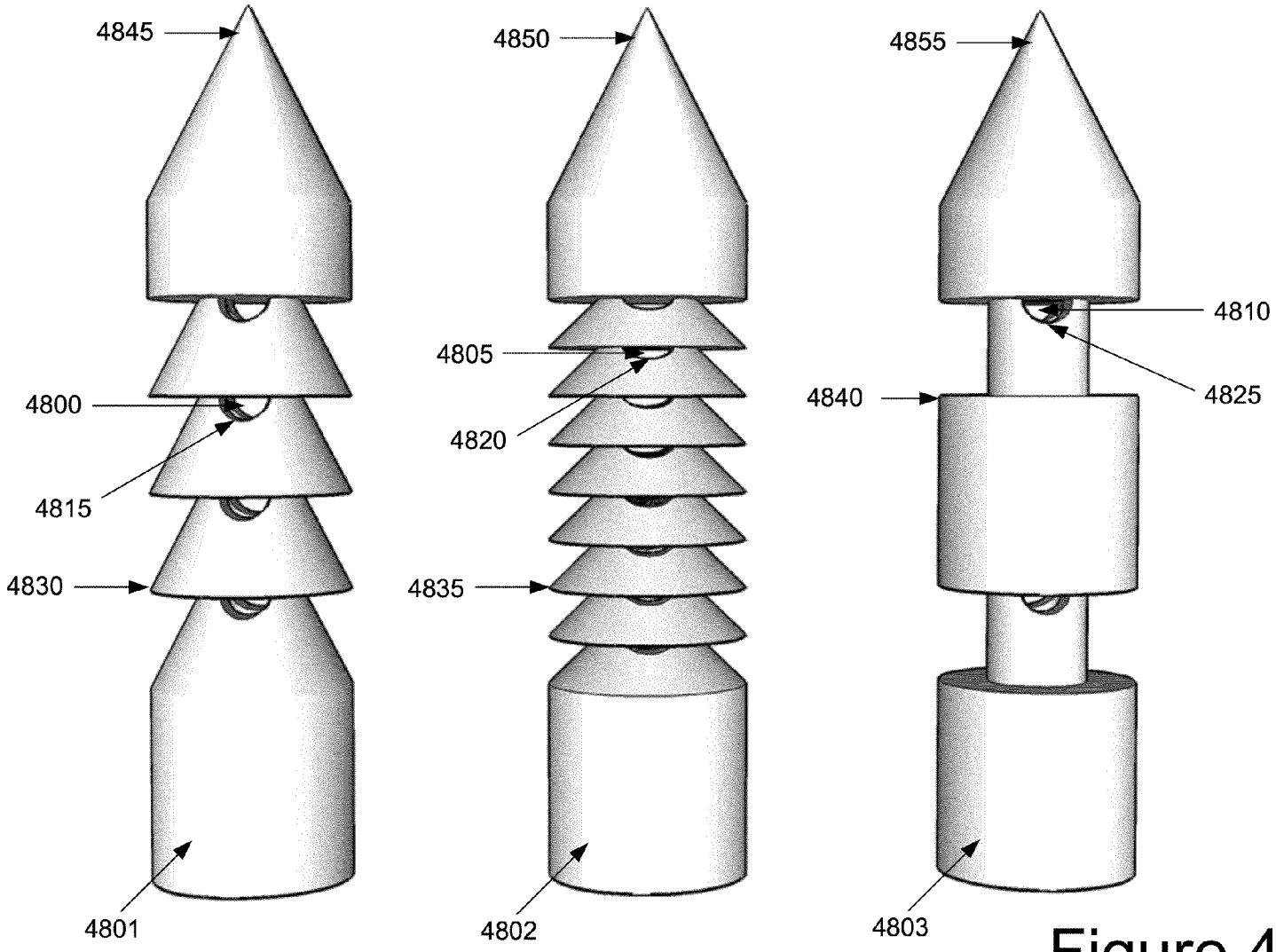
4845
4850
4855
4810
4805
4825
4840
4800
4820
4815
4830
4835
4801
4802
4803

Figure 48A

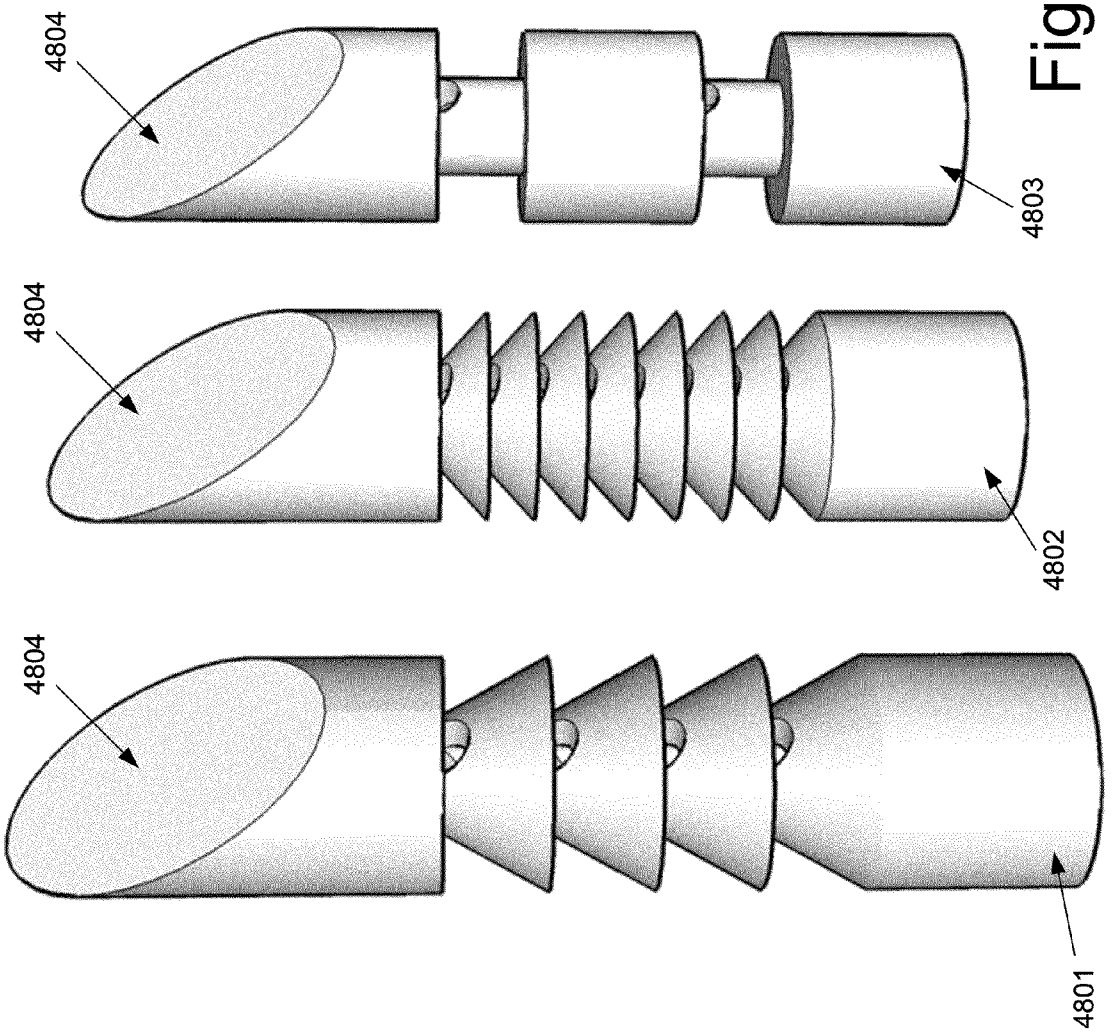

Figure 48B

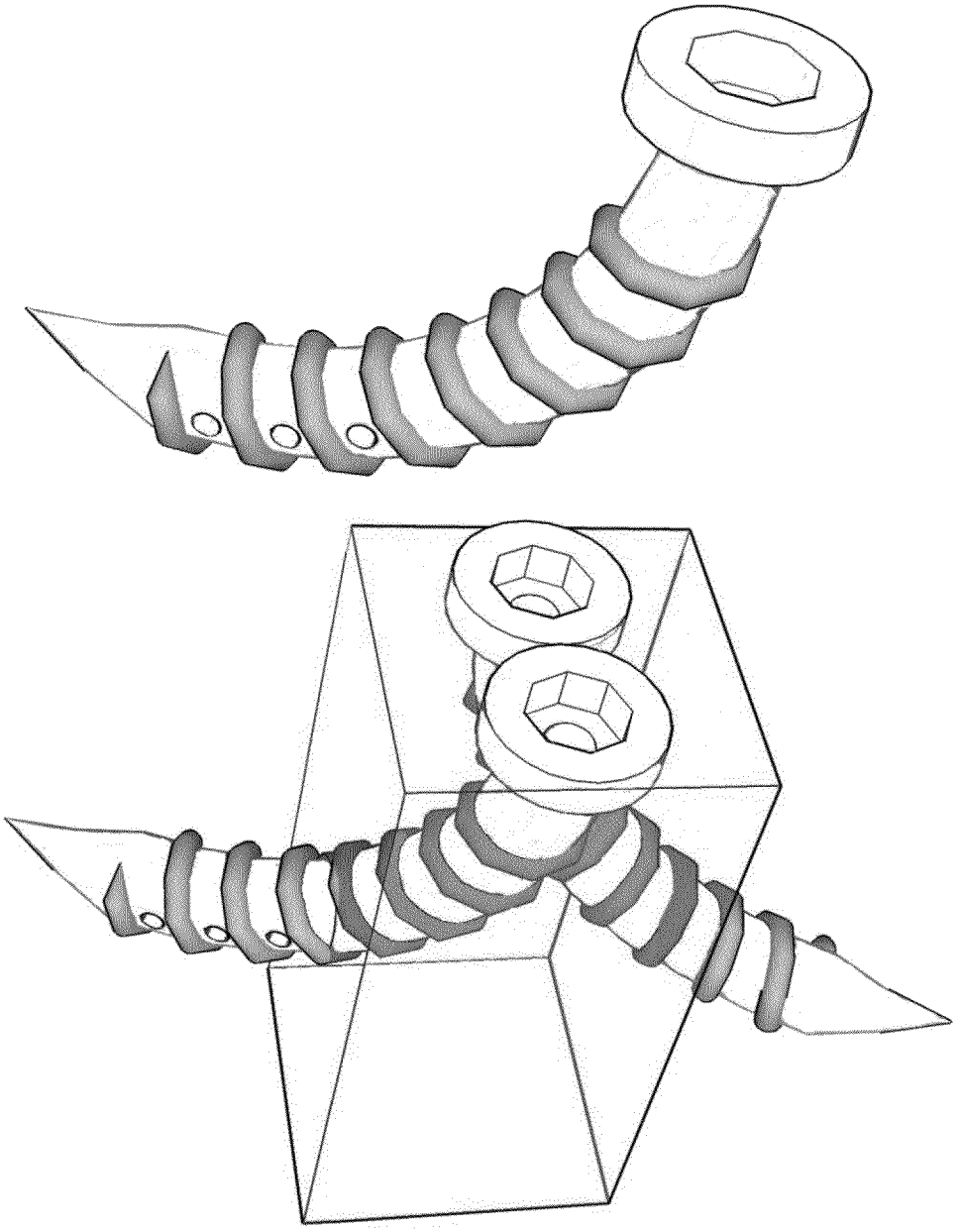

Figure 48C

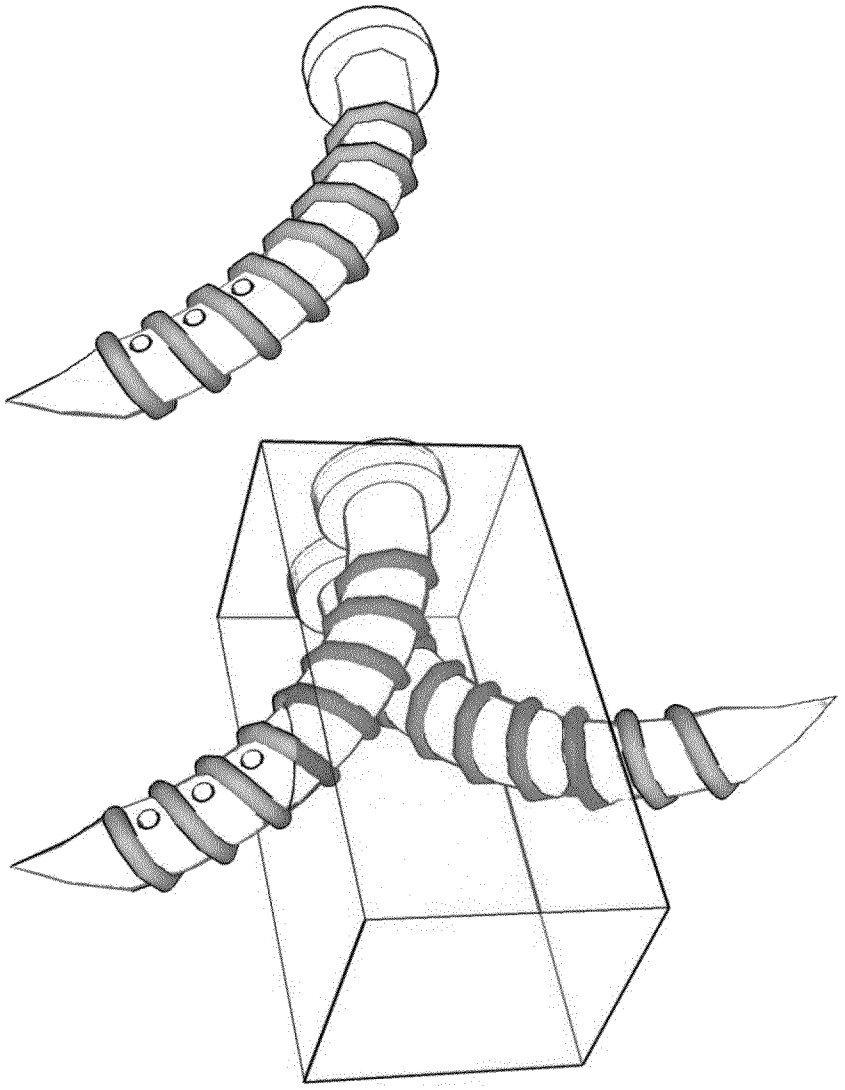

Figure 48D

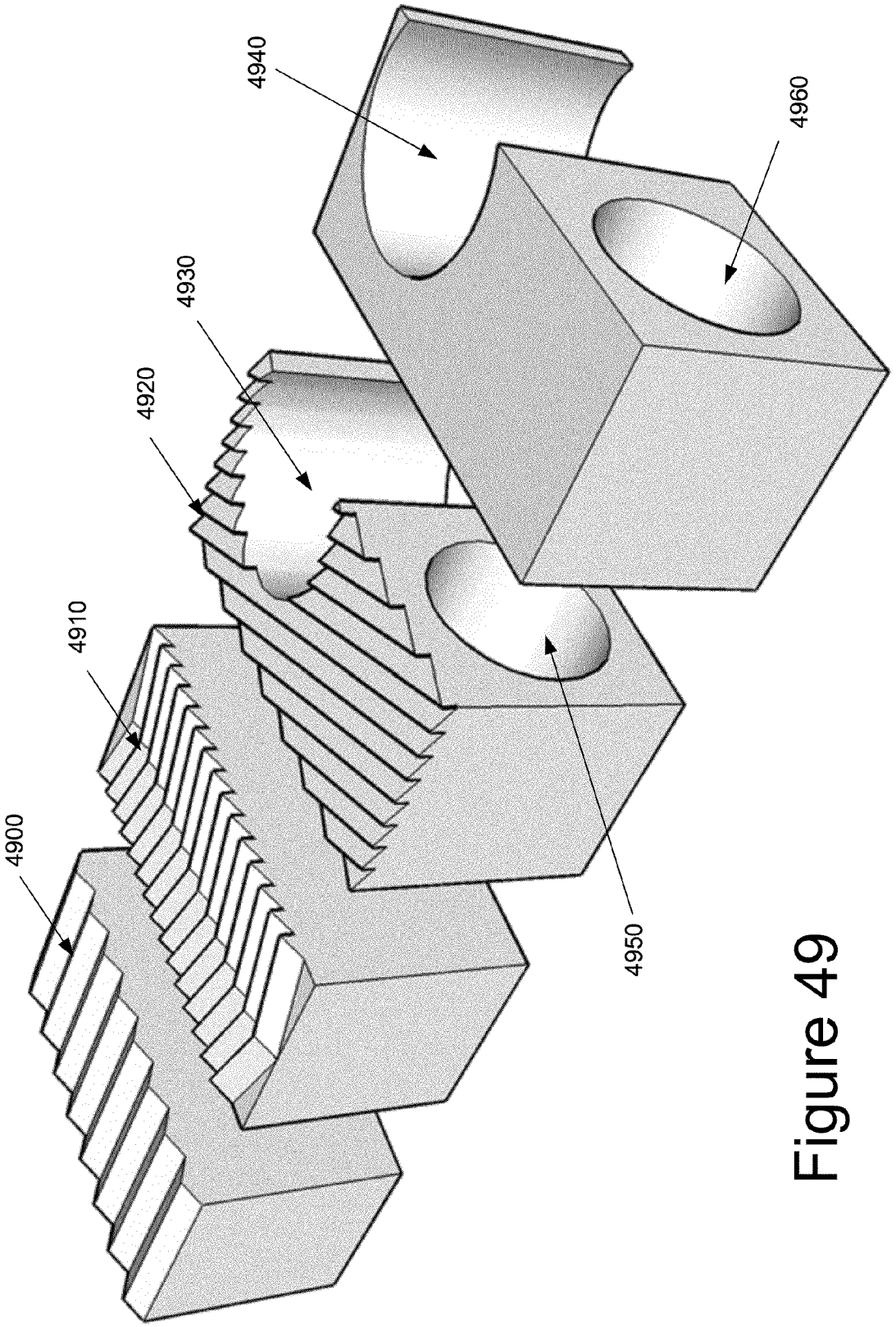

Figure 49

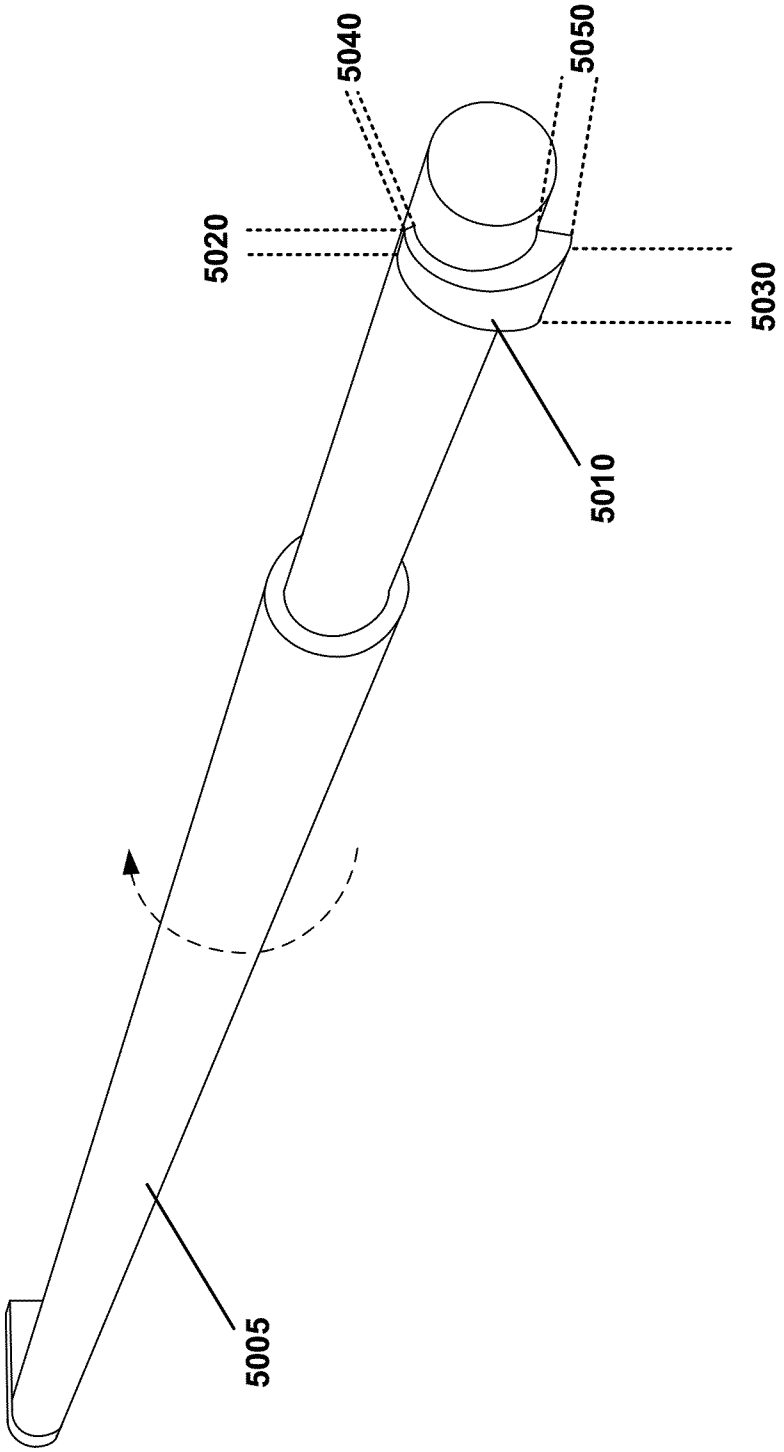

Figure 50

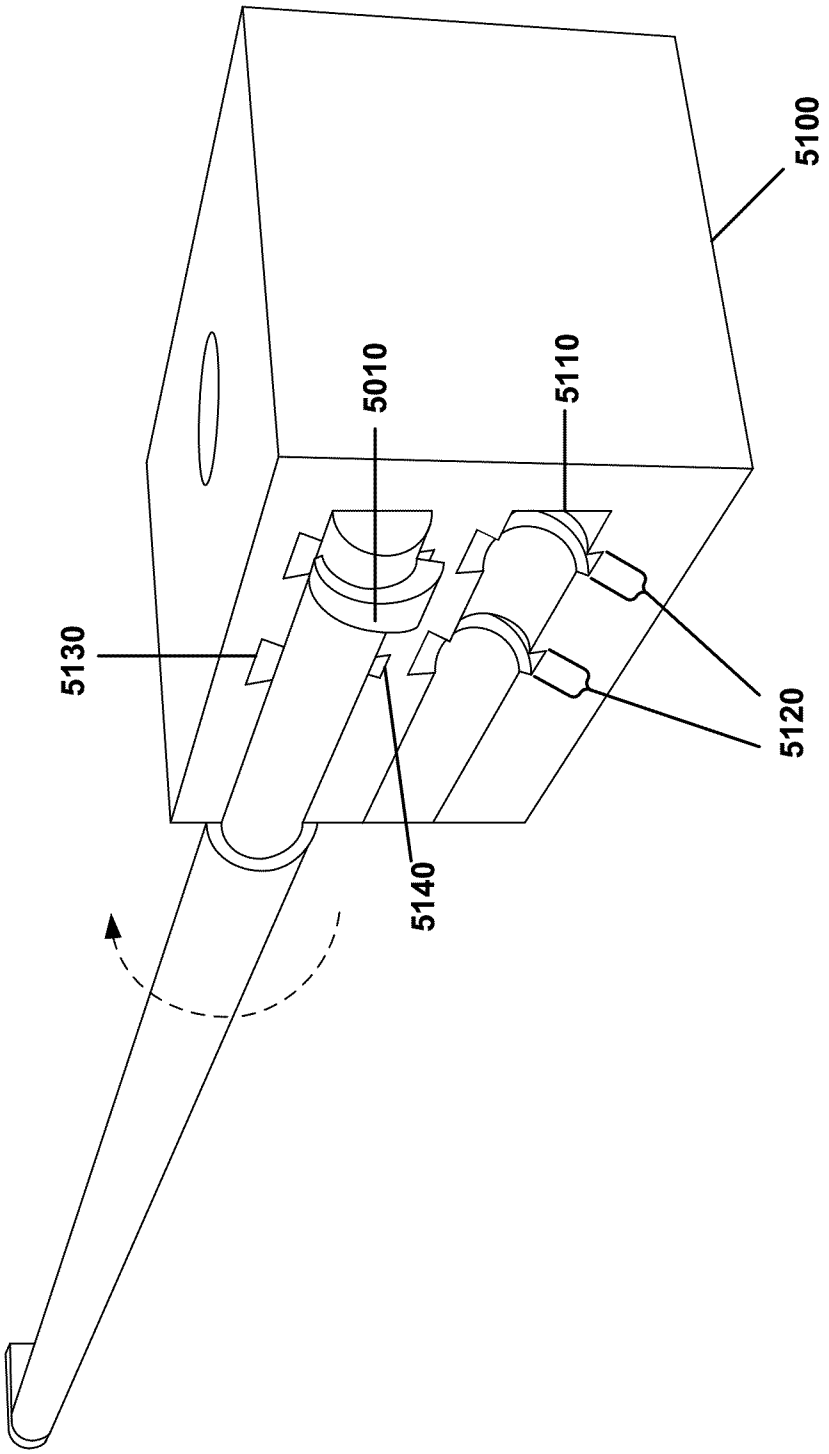

Figure 51

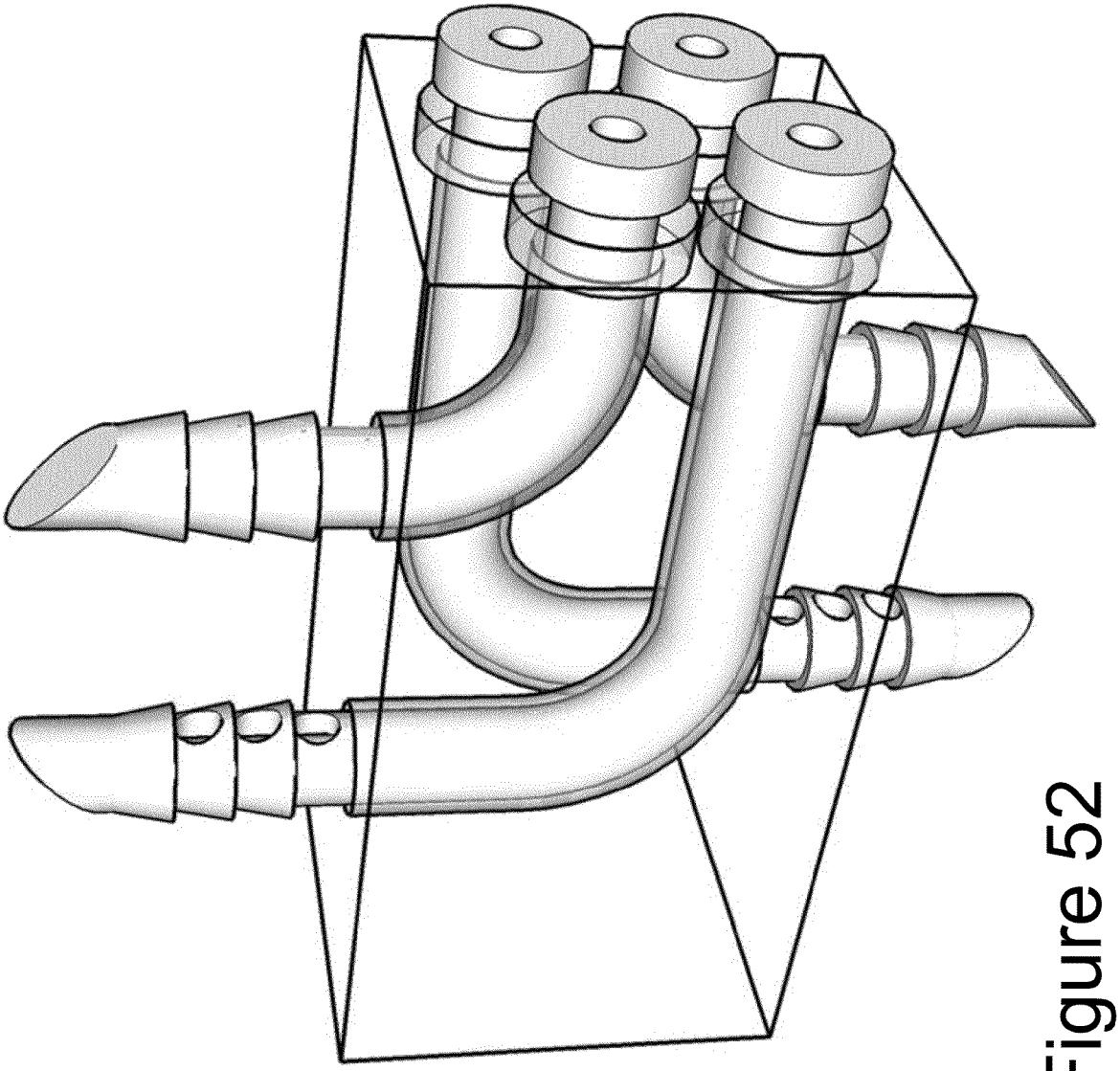

Figure 52

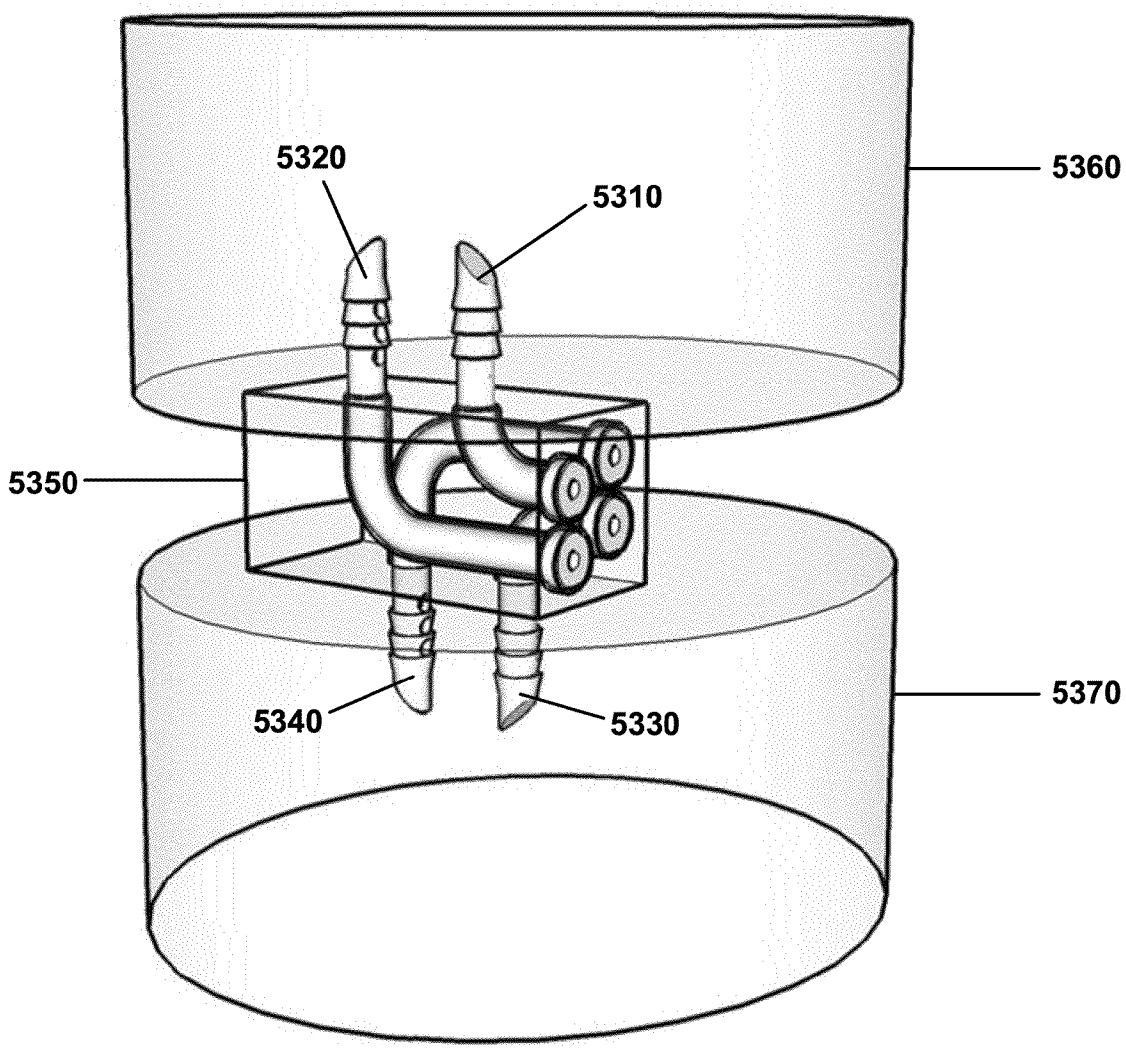

Figure 53

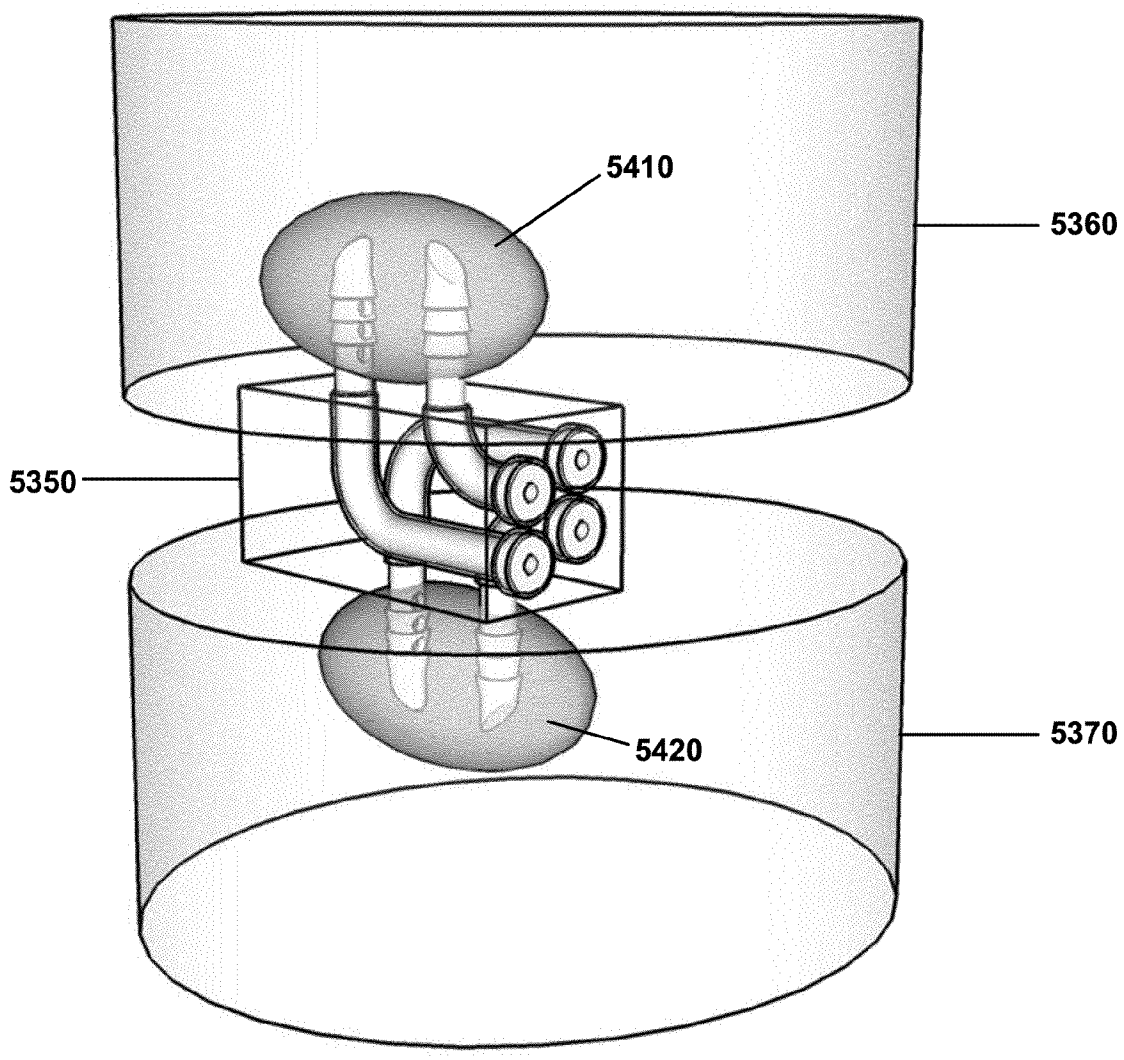

Figure 54

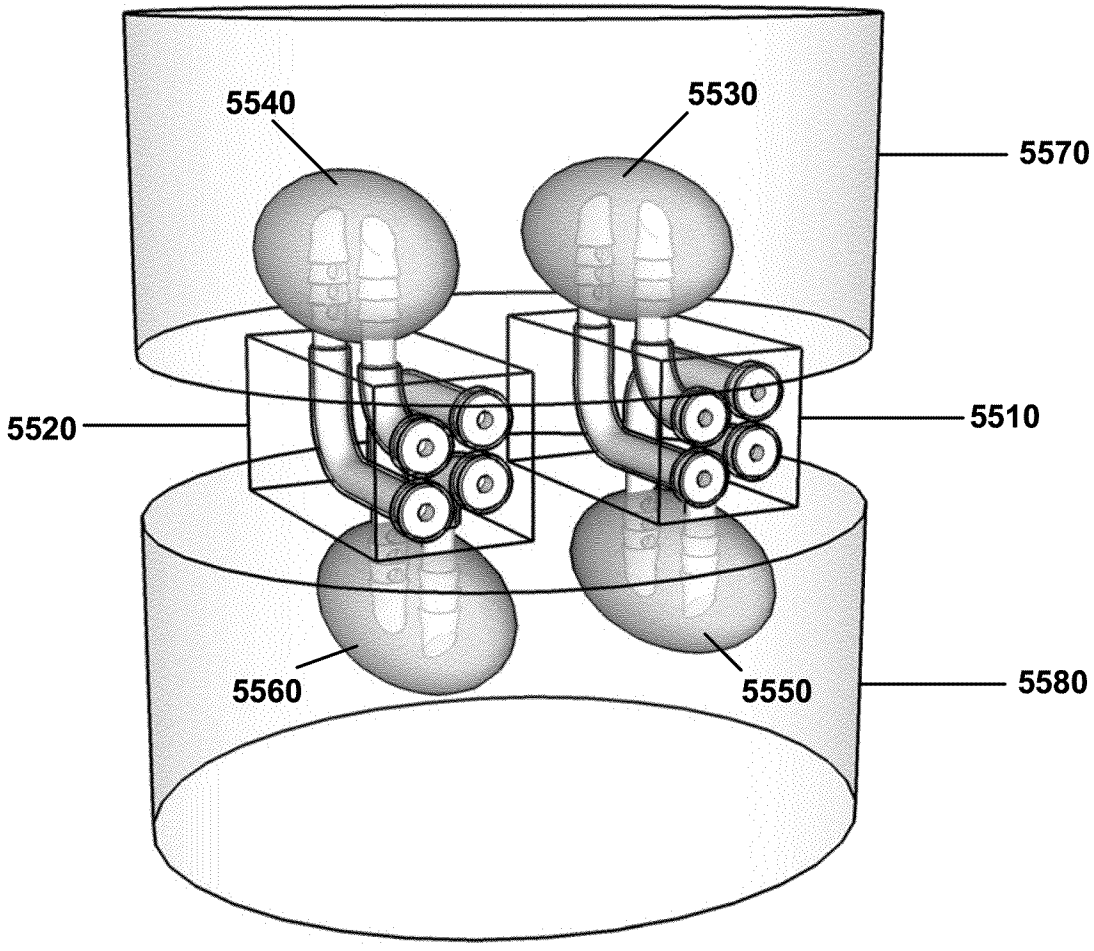

Figure 55

FUSION MEMBER FOR INSERTION BETWEEN VERTEBRAL BODIES

CLAIM OF BENEFIT TO PRIOR APPLICATIONS

This application claims benefit to U.S. Provisional Patent Application 61/211,484, filed on Mar. 27, 2009. This application is a continuation application of U.S. patent application Ser. No. 12/383,950, filed Mar. 27, 2009, now issued as U.S. Pat. No. 8,382,839. This application is also a continuation-in-part application of U.S. patent application Ser. No. 12/113,362, filed on May 1, 2008, now issued as U.S. Pat. No. 8,313,528. U.S. patent application Ser. No. 12/383,950 claims benefit to U.S. Provisional Patent Application 61/040,136, filed on Mar. 27, 2008; U.S. Provisional Patent Application 61/109,175, filed Oct. 28, 2008; and U.S. Provisional Patent Application 61/148,036, filed Jan. 28, 2009. U.S. patent application Ser. No. 12/113,362 claims benefit to U.S. Provisional Patent Application 61/040,136, filed Mar. 27, 2008. The above-mentioned applications, namely U.S. patent application Ser. No. 12/383,950, now issued as U.S. Pat. No. 8,382,839 and U.S. patent application Ser. No. 12/113,362, now issued as U.S. Pat. No. 8,313,528, and U.S. Provisional Patent Applications 61/211,484, 61/040,136, 61/109,175, and 61/148,036, are incorporated herein by reference.

FIELD OF THE INVENTION

The invention pertains to spinal implants and surgical procedures for spinal fusion and stabilization.

BACKGROUND OF THE INVENTION

Back and neck pain are the leading causes of disability and lost productivity for American workers under the age of 45. Degenerative disc disease and its sequelae, whereby the fibrocartilaginous disc between adjacent vertebral bodies loses height, hydration and structural integrity, is one of the most common causes of back and neck pain and may develop secondary to traumatic injuries, inflammatory processes or various degenerative disorders. When conservative treatment fails, surgical fusion of the vertebral segments across the abnormal disc may be the only currently available procedure for pain relief. An increasing number of these spinal fusions are performed each year. It is estimated that over half a million of these procedures were performed in the United States last year alone.

Various surgical approaches to abnormal lumbar disc spaces are employed and include anterior interbody fusions, posterior interbody fusions and tranforaminal fusions. At cervical levels, an anterior approach is often employed. These procedures may be augmented by various posterior element instrumentation techniques. Regardless of the surgical approach, the goal is to achieve solid bony fusion between the involved endplates and eliminate the symptoms caused by motion and associated degenerative and other reactive changes between these unstable vertebral segments.

The first lumbar fusion procedures involved removal of a portion of the abnormal disc and placement of autologous bone graft material in the disc space without other instrumentation in the vertebral bodies or posterior elements. This approach often failed due to inadequate structural integrity. Subsequently, cortical bone dowels and femoral ring allografts were employed in an attempt to restore disc space height and augment structural integrity. After U.S. Pat. No. 4,961,740 ("Ray, et al.") introduced the concept of the threaded cylindrical interbody fusion cage in 1990, numerous

other interbody fusion devices were developed. These devices include cylindrical, rectangular, and tapered cages and spacers composed of metals, polymers, human bone allograft and other materials. Some of these devices incorporate or are coated with human bone morphogenetic protein or other agents to promote new bone formation and accelerate fusion. Despite these advancements, failure rates for spinal fusion surgeries remain unacceptably high, greater than 10 percent in most series.

Therefore, there is a need in the art for an improved method to effect a more rapid, reliable fusion between unstable vertebral segments and avoid the considerable medical and economic impact of failed spinal fusions.

SUMMARY OF THE INVENTION

Some embodiments of the invention provide an apparatus that (1) delivers a fusion member between two vertebral bodies after at least a portion of the fibrocartilaginous disc between the vertebral bodies has been removed, and (2) affixes the fusion member to the vertebral bodies. In some embodiments, the apparatus includes (1) a fusion member that is delivered and positioned between the vertebral bodies, (2) a delivery mechanism that delivers and positions the fusion member between the vertebral bodies, and (3) an anchoring member that affixes the fusion member to the vertebral bodies.

In some embodiments, the interbody fusion member is a shaped block (e.g., a rectangular or oblong block) with one or more channels (e.g., tubular channels). As mentioned above, this member is placed between endplates of adjacent vertebrae following a partial or complete discectomy. In this position, two or more sides of the fusion member are in contact with the opposed endplates. These contacting sides in some embodiments restore both disc height and physiologic lordosis. In some embodiments, these sides are parallel to each other, whereas in other embodiments, these sides are nonparallel such that the fusion member presents a tapered profile when viewed laterally. In this position, one or more anchoring members (e.g., one or more open-tipped or close-tipped needles) can be pushed through the one or more channels of the fusion member and into the marrow space of one or more of the vertebral bodies, in order to affix the fusion member to the vertebral bodies. This is further described below.

In some embodiments, the delivery mechanism that delivers the fusion member between vertebral bodies includes (1) a delivery housing that houses the anchoring mechanism and (2) a retention mechanism that couples the delivery housing to the fusion member. The delivery housing of some embodiments includes channels that run the entire length of the delivery housing that guide the anchoring mechanism to the proper channel opening of the fusion member. In some embodiments, the delivery housing also includes channels that guide retention rods toward the retention mechanism of some embodiments.

In some embodiments, the retention rods have retention teeth that mate with retention grooves on the fusion member. The retention rods, grooves, and teeth form the retention mechanism of some embodiments. Other embodiments might have different retention mechanisms. For instance, in some embodiments, the retention teeth are on the fusion member while the retention grooves are on the retention rod. Moreover, instead of, or in conjunction with, this tooth and groove approach, one of ordinary skill will realize that other embodiments use other retention structures (e.g., other male/female structures, other structures such as expandable clasps

that encapsulate the lateral edges of the fusion member, other structures such as a clamp, etc.) to affix the delivery mechanism to the fusion member.

The retention mechanism is used in some embodiments as a way of controllably detaching the delivery mechanism from the fusion member after the medical practitioner (1) determines that the fusion member is placed at the desired position between two vertebral bodies, and (2) inserts the anchoring members into the vertebral bodies in order to affix the fusion member to the vertebral bodies. When the medical practitioner determines (e.g., by viewing x-ray images of the patient) that the fusion member is not placed at an appropriate position between two vertebral bodies, the medical practitioner can use the delivery mechanism to reposition the fusion member to the desired location. One of ordinary skill will realize that the delivery mechanism and/or retention mechanism of some embodiments can be used for delivery of any type of interbody fusion members between two vertebral bodies (e.g., even those that do not utilize anchoring members).

As mentioned above, the anchoring members (e.g., large gauge needles 1-10 mm in outer diameter) are pushed through the channels of the delivery mechanism and the fusion member and into the marrow space of the vertebral bodies, in order to affix the fusion member to the vertebral bodies. Moreover, in some embodiments, polymethyl methacrylate (PMMA) or other bone cement or hardening polymer material, is injected through the anchoring members and into the vertebral bodies. In the marrow space of the vertebral bodies, this injected material forms a cloud around the tip of the anchoring member and hardens after a duration of time. Once this injected material hardens, it further solidifies the attachment of the fusion member to the vertebral bodies. To facilitate such injections, the anchoring members have hollow channels and perforated tips in some embodiments.

In some embodiments, the anchoring members are part of an anchoring mechanism that also includes driving members that advance the anchoring members through the fusion member channels into vertebral bodies. Some embodiments of the invention provide a coupling mechanism that couples each anchoring member to a corresponding driving member. In some embodiments, each driving member includes (1) a shaft that advances the anchoring member fully into the fusion member or withdraws the anchoring member from the fusion member and (2) a central lumen that provides a conduit for delivering polymers to the anchoring member.

The central lumen in the driving member aligns with the hollow channel (i.e., lumen) in its corresponding anchoring member once the anchoring member is in its desired position inside a vertebral body. Accordingly, once the driving members push the anchoring members into the vertebral bodies, hardening material (e.g., PMMA, bone cement, or other hardening polymer) may be injected through the central lumen of the driving and anchoring members. The polymer flows from the central lumen of the driving member, through the central lumen of the anchoring member, and into the marrow space of the vertebral bodies. This material passes through the perforations (i.e., openings) of the anchoring member into the marrow space of the vertebral body, contiguous with or adjacent to the anchoring member tip that is inside the marrow space. The polymer clouds in some embodiments form a spherical or ellipsoidal "cloud" of PMMA contiguous with the anchoring member tip. Once the polymer cloud hardens, the surface contours of the anchoring member serve to anchor this member to the vertebral body and prevent it from being withdrawn from the trabecular bone, and thereby enhances the structural integrity of the inserted fusion device yielding solid mechanical fusion.

To enhance the structural integrity of the coupling between the fusion device and the vertebral bodies, some embodiments define various surface contours along the anchoring member's tip. Examples of such contours include angled teeth and backfacing ridges. These contours (e.g., angled teeth and backfacing ridge) allow the anchoring member to pass through the fusion member's channel and into the bone (i.e., into the adjacent vertebral body). In some embodiments, hardening material might not be injected through the anchoring members. Instead, the insertion of the anchoring members and particular variations for the anchoring tip contours prevent the anchoring members from being easily withdrawn from the bone.

In some embodiments, the anchoring member and driving member coupled together form a unified needle. In such an embodiment, the anchoring member is the embedded portion that is embedded in the vertebral bodies while the driving member is the retractable portion that is removed once the fusion member has been affixed to the vertebral bodies between which it is placed.

Once the anchoring members are in place, and the polymers have been injected into the marrow space of the vertebral bodies, the driving members and delivery mechanism may be removed, as mentioned above.

BRIEF DESCRIPTION OF THE DRAWINGS

The novel features of the invention are set forth in the appended claims. However, for purpose of explanation, several embodiments of the invention are set forth in the following figures.

FIG. **1**A provides a front perspective of the intervertebral apparatus.

FIGS. **1**B and **1**C provide different perspectives of an exploded view of the intervertebral apparatus.

FIGS. **2**-**3** illustrate the intervertebral apparatus in relation to two vertebral bodies between which the fusion member is placed.

FIG. **4** illustrates one perspective of the fusion member which includes channels through which anchoring mechanisms can be inserted and advanced.

FIGS. **5**A-**5**B provide an illustration of the fusion member and retention grooves without the retention rods of the delivery mechanism.

FIG. **6** shows a perspective view of the delivery mechanism coupled with the fusion member.

FIG. **7**A illustrates the delivery housing from the perspective of the operator.

FIGS. **7**B-**7**C illustrate the delivery housing with two retention rods in the delivery housing channels from the perspective of the operator and from the perspective opposite of the operator.

FIGS. **8**-**9** provide different perspectives of the retention rod of the delivery mechanism.

FIGS. **10**A-**10**C (1) illustrate an example of the process of controllably detaching the delivery mechanism from the fusion member and (2) provide a detailed view of one of the retention rods.

FIG. **11** illustrates a detailed view of the retention rod teeth coupled with the retention groove.

FIG. **12** illustrates a cross-section of the retention rod coupled with the retention groove.

FIG. **13** shows alternative embodiments of retention teeth of the retention rods.

FIG. **14** shows two anchoring mechanisms in their initial configuration inside the channels of the delivery housing and fusion member.

FIG. **15** shows two anchoring mechanisms in their final configuration after the anchoring members have been advanced into the vertebral bodies.

FIG. **16** illustrates a perspective view of two anchoring members inside the fusion member channels.

FIG. **17** depicts two anchoring members that have almost been fully advanced through the fusion member channels.

FIG. **18** depicts the flexibility of the anchoring member.

FIGS. **19-21** illustrate different views of the driving members and the anchoring members coupled and decoupled with the intervening members.

FIGS. **22**A-**22**B illustrate exploded views of the pivoting mechanism from different perspectives.

FIGS. **23**A-**23**B shows the driving members connecting directly with the anchoring members (i.e., no intervening member).

FIGS. **24**A-**24**B shows different views and configurations of coupling mechanisms connected directly with the anchoring members and the driving members.

FIGS. **25**A-**25**D provide detailed illustrations of the coupling mechanism.

FIGS. **26**A-C show two anchoring members that have been inserted through the fusion member and into the vertebral bodies.

FIGS. **27**A-**27**B depict the placement of one fusion member between adjacent vertebral bodies, a set of two anchoring members that have affixed the fusion member to the vertebral bodies, and the coalescence of the polymer collections that resulted following injections of the polymers via anchoring members.

FIGS. **28**A-**28**B depict placement of two fusion members within the right and left paramedian disc space of adjacent vertebral bodies, multiple sets of anchoring members that have affixed the two fusion members to the vertebral bodies, and the coalescence of polymer clouds following the polymer injections.

FIG. **29** depicts a medical procedure that involves the insertion of the apparatus of some embodiments.

FIGS. **30-33** illustrate different views of an interbody fusion member comprising curved tubular channels with distal openings on the superior block face and inferior block face.

FIG. **34** illustrates a detailed view of the anchoring member tips of one embodiment.

FIGS. **35-36** illustrate different views of anchoring members that have been advanced through the semicircular tubular channels of the fusion member into the marrow space of the vertebral bodies.

FIG. **37** illustrates PMMA injections through the anchoring members above and below the fusion member.

FIGS. **38-40** illustrate different views of an alternative fusion member embodiment with nonparallel angled curved channels extending to the inferior and superior block faces.

FIGS. **41-42** illustrate different views of an alternative fusion member embodiment comprising oblique linear channels that are traversed by straight anchoring members which are rectangular in cross-sectional profile.

FIG. **43** illustrates the tip of the straight anchoring members which are rectangular in cross-sectional profile.

FIGS. **44-45** illustrate different views of PMMA that has been injected and forms collections contiguous with the perforated, contoured tips of anchoring members within the marrow spaces of adjacent vertebral bodies.

FIGS. **46**A, **46**B, and **47** illustrate different views of an alternative fusion member embodiment comprising curved tubular channels that run in parallel planes with respect to each other but are nonparallel to the adjacent faces of the fusion block member.

FIGS. **48**A-**48**D illustrate alternative anchoring member tips.

FIG. **49** illustrates various surface contours of the fusion member.

FIG. **50** illustrates an alternative retention rod with retention teeth of variable dimensions.

FIG. **51** illustrates an alternative retention rod with retention teeth of variable dimensions engaging retention grooves of matching profile in a fusion member.

FIG. **52** shows a fusion member with four channels and four anchoring members that are advanced into these fusion member channels.

FIG. **53** shows four anchoring members that have been inserted through the fusion member and into the vertebral bodies.

FIG. **54** depicts the placement of one fusion member between adjacent vertebral bodies, a set of four anchoring members that have affixed the fusion member to the vertebral bodies, and the coalescence of the polymer collections that resulted following injections of the polymers via anchoring members.

FIG. **55** depicts placement of two fusion members within the right and left paramedian disc space of adjacent vertebral bodies, multiple sets of anchoring members that have affixed the two fusion members to the vertebral bodies, and the coalescence of polymer clouds following the polymer injections.

DETAILED DESCRIPTION OF THE INVENTION

In the following description, numerous details are set forth to provide a better understanding of the various embodiments of the invention. However, one of reasonable skill in the art will realize that the invention may be practiced without the use of the specific details presented herein. In some instances of describing the invention, well-known structures may be omitted or shown in block diagram form to avoid obscuring the description of the invention with unnecessary detail. Therefore, the examples provided herein for description and clarification should not be interpreted as in anyway limiting the language of the claims.

I. OVERVIEW

Some embodiments of the invention provide an apparatus that (1) delivers a fusion member between two vertebral bodies after at least a portion of the fibrocartilaginous disc between the vertebral bodies has been removed, and (2) affixes the fusion member to the vertebral bodies. In some embodiments, the apparatus includes (1) a fusion member that is delivered and positioned between the vertebral bodies, (2) a delivery mechanism that delivers and positions the fusion member between the vertebral bodies, and (3) an anchoring member that affixes the fusion member to vertebral bodies.

In some embodiments, the interbody fusion member is a shaped block (e.g., a rectangular or oblong block) with one or more channels (e.g., tubular channels). As mentioned above, this member is placed between endplates of adjacent vertebrae following a partial or complete discectomy. In this position, two or more sides of the fusion member are in contact with the opposed endplates. These contacting sides may be parallel to each other, or nonparallel such that the fusion member presents a tapered profile when viewed laterally so as to restore both disc height and physiologic lordosis. In this

position, one or more anchoring members (e.g., one or more open-tipped or close-tipped needles) can be pushed through the one or more channels of the fusion member and into the marrow space of one or more of the vertebral bodies, in order to affix the fusion member to the vertebral bodies. This is further described below.

In some embodiments, the delivery mechanism that delivers the fusion member between vertebral bodies includes (1) a delivery housing that houses the anchoring mechanism and (2) a retention mechanism that couples the delivery housing to the fusion member. In some embodiments, the delivery housing also includes channels that guide retention rods of the retention mechanism of some embodiments.

In some embodiments, the retention rods have retention teeth that mate with retention grooves on the fusion member. The retention rods, grooves, and teeth form the retention mechanism of some embodiments. Other embodiments might have different retention mechanisms. For instance, in some embodiments, the retention teeth are on the fusion member while the retention grooves are on the retention rod. Moreover, instead of, or in conjunction with, this tooth and groove approach, one of ordinary skill will realize that other embodiments use other retention structures (e.g., other male/female structures, other structures such as expandable clasps that encapsulate the lateral edges of the fusion member, other structures such as a clamp, etc.) to affix the delivery mechanism to the fusion member.

The retention mechanism is used in some embodiments as a way of controllably detaching the delivery mechanism from the fusion member after the medical practitioner (1) determines that the fusion member is placed at the desired position between two vertebral bodies, and (2) inserts the anchoring members into the vertebral bodies in order to affix the fusion member to the vertebral bodies. When the medical practitioner determines (e.g., by viewing x-ray images of the patient) that the fusion member is not placed at an appropriate position between two vertebral bodies, he can use the delivery mechanism to reposition the fusion member to the desired location. One of ordinary skill will realize that the delivery mechanism and/or retention mechanism of some embodiments can be used for delivery of any type of interbody fusion members between two vertebral bodies (e.g., even those that do not utilize anchoring members and/or PMMA or bone cement).

As mentioned above, the anchoring members (e.g., large gauge needles 1-10 mm in outer diameter) are pushed through the channels of the delivery mechanism and the fusion member and into the marrow space of the vertebral bodies, in order to affix the fusion member to the vertebral bodies. Moreover, in some embodiments, polymethyl methacrylate (PMMA) or other bone cement or hardening polymer material, is injected through the anchoring members and into the vertebral bodies. In the marrow space of the vertebral bodies, this injected material forms a cloud around the tip of the anchoring member and hardens after a duration of time. Once this injected material hardens, it further solidifies the attachment of the fusion member to the vertebral bodies. To facilitate such injections, the anchoring members have hollow channels and perforated tips in some embodiments.

In some embodiments, the anchoring members are part of an anchoring mechanism that also includes driving members that advance the anchoring members through the fusion member channels into vertebral bodies. Some embodiments of the invention provide a coupling mechanism that couples each anchoring member to a corresponding driving member. In some embodiments, each driving member includes (1) a shaft that advances the anchoring member fully into the fusion member or withdraws the anchoring member from the fusion member and (2) a central lumen that provides a conduit for delivering polymers to the anchoring member.

The central lumen in the driving member aligns with the hollow channel (i.e., lumen) in its corresponding anchoring member once the anchoring member is in its desired position inside a vertebral body. Accordingly, once the driving members push the anchoring members into the vertebral bodies, hardening material (e.g., PMMA, bone cement, or other hardening polymer) may be injected through the central lumen of the driving and anchoring members. The polymer flows from the central lumen of the driving member, through the central lumen of the anchoring member, and into the marrow space of the vertebral bodies. This material passes through the perforations (i.e., openings) of the anchoring member into the marrow space of the vertebral body, contiguous with or adjacent to the anchoring member tip that is inside the marrow space. The polymer clouds in some embodiments form a spherical or ellipsoidal "cloud" of PMMA contiguous with the anchoring member tip. Once the polymer cloud hardens, the surface contours of the anchoring member serve to anchor this member to the vertebral body and prevent it from being withdrawn from the trabecular bone, and thereby enhances the structural integrity of the inserted fusion device yielding solid mechanical fusion.

To enhance the structural integrity of the coupling between the fusion device and the vertebral bodies, some embodiments define various surface contours along the anchoring member's shaft. Examples of such contours include angled teeth and backfacing ridges. These contours (e.g., angled teeth and backfacing ridge) allow the anchoring member to pass through the fusion member's channel and into the bone (i.e., into the adjacent vertebral body). In some embodiments, hardening material might not be injected through the anchoring members. Instead, the insertion of the anchoring members and particular variations for the anchoring tip contours prevent the anchoring members from being easily withdrawn from the bone.

In some embodiments, the anchoring member and driving member coupled together form a unified entity, the anchoring member. In such an embodiment, the anchoring member is the embedded portion that is embedded in the vertebral bodies while the driving member is the retractable portion that is removed once the fusion member has been affixed to the vertebral bodies between which it is placed.

Once the anchoring members are in place, and the polymers have been injected into the marrow space of the vertebral bodies, the driving members and delivery mechanism may be removed, as mentioned above.

One of ordinary skill will realize that although several embodiments have been described above, other embodiments might be implemented or operated differently. For instance, before advancing the anchoring members into the vertebral bodies as described above, some embodiments first advance a smaller gauge anchoring member into the marrow space of the adjacent vertebral body before placement of the larger gauge anchoring member. This creates a guide to help ensure that the larger gauge anchoring member will be advanced into the proper position within the trabecular bone of the vertebral body.

To better understand these embodiments, it is helpful to understand relevant terminology and describe examples of the invention in use. Therefore, the following sections present relevant terminology, and provide an overview of an exemplary fusion procedure of some embodiments and of a number of more specific design features and variations.

II. DEFINITIONS AND TERMINOLOGY

The spinal column of humans and other vertebrates comprises vertebral bodies and posterior osseous elements that

provide structural support and also serve to protect the spinal cord and other spinal canal contents. The vertebral bodies are the cylindrical segmental osseous structures that form the anterior margin of the spinal canal and are separated from each other by fibrocartilaginous intervertebral discs. In the present discussion, the term "fusion member" refers to a device positioned between vertebral bodies. In some embodiments, the fusion member has one or more channels for the passage of contoured anchoring members and/or the retention and positioning of bone graft material or bone graft substitutes between adjacent vertebral bodies.

III. COMPONENTS OF THE FUSION MEMBER, DELIVERY MECHANISM, AND ANCHORING MEMBER(S)

Some embodiments of the invention provide an apparatus that (1) delivers a fusion member between two vertebral bodies after at least a portion of the fibrocartilaginous disc between the vertebral bodies has been removed, and (2) affixes the fusion member to the vertebral bodies.

FIGS. **1-3** illustrate an example of one such apparatus according to some embodiments. FIG. **1**A provides a front view of the apparatus **110**. FIGS. **1**B and **1**C provide different perspectives of an exploded view of the apparatus **110**. FIG. **2** provides a side view of the apparatus **110** in relation to two vertebral bodies **210-220** between which a fusion member **120** is placed. FIG. **3** provides a rear view of the apparatus **110** in relation to the two vertebral bodies **210-220** between which the fusion member **120** is placed.

As shown in these figures, the apparatus **110** includes (1) a fusion member **120** that is delivered and positioned between the vertebral bodies **210-220**, (2) a delivery mechanism **130** that delivers and positions the fusion member **120** between the vertebral bodies **210-220**, and (3) anchoring mechanisms **140** that affix the fusion member **120** to the vertebral bodies **210-220**. Each of these components will be described in further detail below.

A. Fusion Member

As mentioned above, the apparatus **110** includes a fusion member **120** that is delivered and positioned between the vertebral bodies **210-220**. The fusion member **120** includes (1) two channels **170** through which two anchoring mechanisms can be advanced, and (2) retention grooves **150** of a retention mechanism for attaching the fusion member to the delivery mechanism.

FIG. **4** illustrates a perspective view of the fusion member **120** of some embodiments of the invention. In this and some of the subsequent figures, fusion members are shown transparently to facilitate an appreciation of the spatial relationships between multiple channels and their openings upon multiple faces of the fusion member.

As shown in FIG. **4**, the fusion member **120** includes channels **410** and **440** through which anchoring mechanisms can be inserted and advanced. Channel **410** has a distal opening **420** on the superior face **430** of the fusion member **120**. Channel **440** has a distal opening **450** on the inferior face **460** of the fusion member **120**. Channel **410** has a proximal opening **470** on the proximal face **490** of the fusion member **120**. Channel **440** also has a proximal opening **480** on the proximal face **490** of the fusion member **120**. Some embodiments of the fusion member provide a recess of increased diameter (e.g., flange cavity, anchoring member cavity, etc.) on the channel opening on the proximal face of the fusion member (one such example will be described below by referring to the anchoring member cavity **1685-1690** of FIG. **16** and the anchoring member cavity **1720** of FIG. **17**).

As shown in the example illustrated in FIG. **4**, the cross-sectional planes of the fusion member channels **410** and **440** are parallel to each other, but are not parallel to the right and left face of the fusion member **120**. This allows the distal opening **420** of channel **410** to be located on the center of the superior **430** face of the fusion member, and the distal opening **450** of channel **440** to be located on the center of the inferior **460** face of the fusion member even though their proximal opening **470** and **480** start on the same proximal face **490**. Even though the fusion member channels shown in these figures are curved and tubular, one of ordinary skill in the art will know that the channels may be other shapes or configurations in other embodiments as later described in Section V.

FIG. **5**A provides an illustration of the fusion member **120** and two sets of retention grooves **150** located on the left side of the fusion member **120** without the retention rods of the delivery mechanism. The two sets of retention grooves on the right side of the fusion member are not shown in this figure. FIG. **5**B provides a front perspective of the fusion member **120** with the two sets of retention grooves **150** located on the left side of the fusion member **120** and two sets of retention grooves **150** located on the right side of the fusion member **120**. The two sets of retention grooves couple with the retention rods of the delivery mechanism. Both the delivery mechanism and the retention rods will be described in further detail below.

As shown in FIGS. **5**A-**5**B, each set of retention grooves **150** includes two subsets of grooves (i.e., indentations, cavities, etc.) that differ in diameter, a first set of grooves **520** having a smaller diameter than a second set of grooves **510**. These figures show the first subset of grooves **520** with six indentations that are smaller in diameter than the second subset of grooves **510** with five indentations that are larger in diameter. The first subset of grooves **520** couples with the shaft of a retention rod while the second subset of grooves **510** couples with the teeth of the retention rod as further described below. In some embodiments, the retention grooves of the fusion member couple with retention rods of the delivery mechanism to form a retention mechanism. The retention teeth of the rods are the male coupling members of the retention mechanism while the retention grooves of the fusion members are the female coupling members of this mechanism.

In the example illustrated in FIGS. **5**A-**5**B, two subsets of retention grooves **150** are located on the left side of the fusion member and two subsets of retention grooves are located on the right side of the fusion member. However, one of ordinary skill in the art will realize that the retention mechanism and retention grooves can be in another location on the fusion member, such as in the interior of the fusion member, and can vary in shape, size, and number. Also, other embodiments might have different retention mechanisms. For instance, in some embodiments, the retention teeth are on the fusion member while the retention grooves are on the retention rod. Moreover, instead of, or in conjunction with, this tooth and groove approach, one of ordinary skill will realize that other embodiments use other retention structures (e.g., other male/female structures, other structures such as expandable clasps that encapsulate the lateral edges of the fusion member, other structures such as a clamp, etc.) to affix the delivery mechanism to the fusion member.

Also, in the example illustrated in FIG. **5**B, the cross-sectional view of the two channels **530** that go through the fusion member **120** are parallel to the right and left side of the fusion member **120**. This is a different channel implementation than the channels **410** and **440** of the example illustrated

in FIG. **4**. As mentioned above, the cross-section planes of those two channels **410** and **440** are not parallel to the right and left sides of the fusion member, even though they are parallel to each other.

In some embodiments, the fusion member can be composed of any number of materials, such as metals (e.g., stainless steel, titanium, or nitinol), various polymers (e.g., PMMA or polyetheretherketone), carbon fiber, etc. The fusion member can also be partially or be completely made of bioabsorbable or biodegradable materials, so that it can be partially or be completely absorbed. In some embodiments, the fusion member's faces that are in contact with the vertebral endplates may have surface contours such as ridges to enhance stability. The fusion member can also include additional channels or cavities to be packed with bone graft material or bone graft substitutes to enhance progressive solid bony fusion. Bone graft material and bone graft substitutes can also be packed into the intervertebral space surrounding and between the fusion members to enhance progressive solid bony fusion. The fusion member can also be coated with or partially be composed of human bone morphogenetic protein or other bone growth inducing substances.

Typically, the fusion member is inserted between adjacent vertebral bodies after at least some of the fibrocartilaginous disc between the adjacent vertebral bodies is removed during a partial or complete discectomy. Once the fusion member is delivered to the proper location between adjacent vertebral bodies, two or more sides of the fusion member may be in contact with the opposed endplates of the adjacent vertebral bodies. These contacting sides in some embodiments restore both disc height and physiologic lordosis. In some embodiments, these sides are parallel to each other, whereas in other embodiments, these sides are nonparallel such that the fusion member presents a tapered profile when viewed laterally. The delivery mechanism that inserts the fusion member between the vertebral bodies will be described below.

B. Delivery Mechanism

As mentioned above, the delivery mechanism delivers the fusion member between adjacent vertebral bodies. FIG. **6** shows a perspective view of the delivery mechanism **130** coupled with the fusion member **120**. The delivery mechanism includes (1) a delivery housing **610** that houses the anchoring mechanism and retention rods **160**, and (2) four retention rods **160** that couple the delivery housing **610** with the fusion member **120**. From this perspective, only three of the four retention rods can be seen.

FIG. **7**A illustrates the delivery housing **610** from the perspective of the operator during an operation (i.e., the backside of the delivery mechanism during an operation). FIGS. **7**B and **7**C illustrate the delivery housing with two retention rods **160** in channels **710** from the perspective of the operator and from the perspective opposite of the operator during an operation (i.e., from the front side of the delivery mechanism during an operation).

As shown in FIGS. **7**A and **7**B, the delivery housing **610** includes circular channels **710** and **720** that run the entire length of the delivery housing **610**, from the distal end of the delivery housing to the proximal end of the delivery housing. In some embodiment, these channels have the same diameter throughout the entire length of the channel. The two channels **720** house and guide the anchoring mechanism (not pictured) to the proper channel opening of the fusion member, whereas the four channels **710** house and retain the retention rods. One of ordinary skill in the art will realize that any number of channels that house the retention rods and the anchoring mechanism can be used. The delivery housing channels can be of various shapes and sizes to accommodate the various shapes and sizes of the anchoring mechanism and retention rods. The anchoring mechanism will be described in further detail in Section C.

As mentioned above, the retention mechanism attaches the delivery housing to the fusion member. In some embodiments, the retention mechanism is used as a way of controllably detaching the delivery mechanism from the fusion member after the medical practitioner determines that the fusion member is placed at the desired position between two vertebral bodies.

The retention mechanism that is illustrated in FIGS. **6**-**7** includes (1) retention rods **160** of the delivery mechanism **130**, and (2) sets of retention grooves **150** of the fusion member **120**, which couple with retention rods **160** of the delivery mechanism **130**. As shown in FIGS. **8**-**9** each retention rod in some embodiments includes (1) a shaft **810** with a distal end that couples with the subset of smaller retention grooves **520**, (2) retention teeth **815** on the distal end of the shaft **810** that couple with the subset of larger retention grooves **510**, and (3) a handle **820** on the proximal end of the shaft that rotates the retention rod.

FIGS. **10**A-**10**C step through an example of the process of controllably detaching the delivery mechanism **130** from the fusion member **120** once the delivery mechanism is no longer needed. FIG. **10**A shows the initial configuration of two retention rods **160** of the delivery mechanism **130** fully coupled with two sets of retention grooves of the fusion member **120**. In this figure, the retention rod **160** is fully coupled with retention grooves of the fusion member **120**. In this configuration, the delivery rod **160** and delivery housing (e.g., the delivery mechanism **130**) is tightly coupled with the fusion member **120**. This configuration allows the fusion member **120** to be delivered between adjacent vertebral bodies. After the fusion member **120** has been delivered, a medical practitioner determines (e.g., by viewing x-ray images of the patient) whether the fusion member is in the correct position. If a determination is made that fusion member is not in the correct position between two vertebral bodies, the delivery mechanism can be used to reposition the fusion member to the desired location. When the medical practitioner determines that the fusion member is placed at the desired position between two vertebral bodies, and anchoring members have affixed the fusion member to the vertebral bodies, the retention mechanism can be used to controllably detach the delivery mechanism **130** from the fusion member **120**. The controllable detachment of the delivery mechanism from the fusion member is initiated by the uncoupling of each retention rod from each set of retention grooves.

FIG. **10**B shows a single retention rod **160** partially uncoupled from the retention grooves of the fusion member. In this configuration, the retention rod **160** is rotated 180 degrees so that the retention teeth **910** are disengaged from the subset of larger retention grooves **510**. This configuration allows the retention rod **160** to be withdrawn from the retention grooves of the fusion member.

FIG. **10**C shows the distal end of the shaft of the retention rod **160** after the shaft has been pulled away from the fusion member so that it is barely in contact with the subset of smaller retention grooves **520** (i.e., it has been removed from all but the last smaller retention groove). Once the shaft of the retention rod has been withdrawn from the retention grooves and from the fusion member, the process can be repeated to uncouple the remaining retention rods from the fusion member. When all of the retention rods have been uncoupled from the fusion member, the delivery mechanism can be detached from the fusion member and removed from the patient.

FIGS. **11-12** illustrate another example of the retention grove and teeth structures of some embodiments. In this example, the retention teeth **1115** encompass less than 180 degrees of the retention rod shaft. This facilitates clearance between the retention teeth **1115** and the larger-diameter retention grooves **1110** when uncoupling the retention teeth **1115** from these grooves **1110** and when withdrawing the retention rod **160** away from the fusion member and out of the smaller-diameter retention grooves **1120**. This example also shows the flared shape of the subset of larger retention grooves **1110**. The flared shape of the retention grooves **1110** match the flared shape of the retention teeth **1115** in order to secure the retention teeth **1115** to the retention grooves **1110**.

FIG. **12** illustrates a cross-section of the retention teeth **1115** fully coupled with the larger-diameter retention grooves **1110** to show the flared shape of the retention teeth. The width of the retention teeth increases as the distance increases from its base **1210** (i.e., where the retention teeth **1115** attach to the retention rod **160**). The tip **1220** of each retention tooth has the largest width while the base **1210** of each retention tooth has the smallest width. This flared shape prevents any movement of the retention rod along the plane of the x, y, or z axis (i.e., prevents any horizontal or vertical movement, including the outward lateral movement of the retention rod from the fusion member) when the teeth of the retention rod are fully coupled with the larger-diameter retention grooves.

One of ordinary skill in the art will realize that even more alternative structures can be used for the retention groove and teeth structures than those illustrated in FIGS. **8-12**. For instance, FIG. **13** illustrates a number of other teeth structures that are used in some embodiments.

Moreover, one of ordinary skill in the art will also realize that different configurations and different numbers of retention teeth can be utilized to affix the delivery mechanism to the fusion member. In some embodiments, the retention teeth may be on the fusion member and the retention groove may be on the retention rod. Instead of, or in conjunction with, this tooth and groove approach, other embodiments of the invention can use other structures (e.g., other male/female structures, other structures such as expandable clasps that encapsulate the lateral edges of the fusion member, other structures such as a clamp, etc.) to affix the delivery mechanism to the fusion member.

As mentioned above, the delivery housing channels house and guide the anchoring mechanism to the proper location in the fusion member. Different embodiments have different housing channels for guiding the anchoring mechanism to the proper location in the fusion member. In some embodiments, a circular channel with a constant diameter throughout its entire length can guide the anchoring mechanism as shown in FIGS. **7A-7C**. Other embodiments have channels of different shapes and sizes. One such alternative embodiment is a square or rectangular channel with increasing and decreasing diameter towards the distal end of the delivery housing as will be described in the next section in reference to FIG. **14**.

C. Anchoring Mechanism

Different embodiments of the invention use different anchoring mechanisms. Some embodiments use an anchoring mechanism formed by three pieces—an anchoring/embedded member, an intervening member, and a driving/retractable member. In some embodiments, the anchoring/embedded member, intervening member, and the driving/retractable member couple with each other to form a unified needle.

Other embodiments use an anchoring mechanism formed by two pieces—an anchoring/embedded member and a driving/retractable member. In some embodiments, the anchoring/embedded member and the driving/retractable member couple with each other to form a unified needle. The different embodiments of the anchoring mechanism will now be described in detail below.

1. Pivoting Anchoring Mechanism with Intervening Member

As mentioned above, some embodiments use an anchoring mechanism formed by three pieces—an anchoring/embedded member, an intervening member, and a driving/retractable member. FIG. **14** shows one such embodiment of the anchoring mechanism. In this figure, two anchoring mechanisms are in their initial configuration inside the channels **1465** and **1475** of the delivery housing **610** and the fusion member **120**. The anchoring mechanisms include (1) anchoring members **1410-1420** that affix the fusion member **120** to adjacent vertebral bodies, (2) intervening members **1470** and **1480**, and (3) driving members **1430-1440** that advance the anchoring members **1410-1420** through the fusion member channels into the vertebral bodies. The driving members **1430-1440** include (1) shafts that advance the anchoring members **1410-1420** fully into the fusion member **120** or withdraw the anchoring members **1410-1420** from the fusion member **120** and (2) central lumens that provide a conduit for delivering polymers to the anchoring members **1410-1420**. The intervening members **1470** and **1480** have central lumens (e.g., channels) as well. The central lumen in the driving members **1430-1440** and intervening members **1470** and **1480** align with the hollow channels (i.e., lumen) of their corresponding anchoring members **1410-1420** once the anchoring members **1410-1420** are advanced to their desired position inside the vertebral bodies.

Two delivery housing channels are shown in this figure. The first channel is shown with an opening **1465** on the proximal end of the delivery housing. The second channel is shown with the opening **1475** also on the proximal end of the delivery housing. Moreover, in FIG. **14**, both channels are shown as transparent so that the second driving and anchoring members can be seen. However, these channels are similar to the channels **720** in FIGS. **7A-7C**, except for their shape, which is further described below.

In some embodiments, the anchoring members are initially configured to be inserted in the entirety of the fusion member channels or in part of it, during the manufacturing of the fusion member delivery apparatus that contains these anchoring members. In other embodiments, they are initially configured to be fully contained in the housing of the delivery mechanism before they are inserted into the fusion member on their way for inserting into the vertebral bodies during an operation.

FIG. **15** shows the anchoring mechanisms in a configuration after the anchoring members **1410-1420** have been advanced into the vertebral bodies (which are not shown in this figure). When the anchoring mechanisms are fully advanced, the tips of the anchoring members **1410-1420** extend out of the fusion member channels and beyond the boundaries of the fusion member **120** into the marrow space of adjacent vertebral bodies. In this configuration; the anchoring members **1410-1420**, the driving members **1430-1440**, and intervening members **1470** and **1480** as well as their central lumens are aligned. This alignment provides an unobstructed pathway for the polymer to flow from the driving members **1430-1440** through the intervening members **1470** and **1480** and into the anchoring members **1410-1420**.

FIGS. **14** and **15** also show an alternative embodiment of the delivery housing channels as mentioned above. As shown in these figures, the delivery housing channels **1465** and **1475** has two sections **1510** and **1520**. A first section **1510** of the

delivery housing channel has a diameter that increases towards the distal end of the delivery housing **610** (i.e., has increasing cross sections along the anchoring mechanism's path of the movement). In this section, the top side and bottom side of the delivery housing channel taper away from each other (i.e., the top side inclines away from the proximal opening while the bottom side declines away from the proximal opening). The increasing diameter provides sufficient space to allow the anchoring members **1410** and **1420** and the intervening members **1470** and **1480** to be at an angle with the driving members **1430** and **1440** as shown in its initial configuration. In addition, the increased diameter provides sufficient space to allow the anchoring members **1410** and **1420** and the intervening members **1470** and **1480** to pivot with the driving members **1430** and **1440**.

A second section **1520** of the delivery housing channel has a diameter that decreases towards the distal end of the delivery housing **610** (i.e., has decreasing cross sections along the anchoring mechanism's path of movement). In this section, the top side and bottom side of the delivery housing channel taper toward each other (i.e., the top side declines towards the distal opening while the bottom side inclines towards the distal opening). The tapered (i.e. angled) top and bottom sides of this section (1) allow the anchoring member to pivot at an angle with the driving member and (2) guide the driving member towards the distal opening of the delivery housing channel. In some embodiments, each channel's longitudinal cross-section (i.e., cross-section that runs the length of the delivery housing) is in the shape of two trapezoids where the bases of the trapezoids are facing each other.

The transition of the anchoring mechanism from its initial configuration to its final configuration involves the tapered sides of the delivery housing channel's second section. As mentioned above, the tapered top and bottom sides of the second section allow the anchoring member to pivot with the driving member. While the anchoring mechanism is in its initial configuration illustrated in FIG. **14**, force can be applied to the driving member in a first direction illustrated in FIG. **14** to advance the driving member towards the distal end of the delivery housing channel. When the driving member is advanced to the tapered sides of the delivery housing channel's second section, the tapered sides cause the anchoring member to pivot at an angle with the driving member. As the driving member is further advanced in this first direction, the distal end of the driving member travels down the tapered side toward the distal opening of the delivery housing. Since the anchoring member is at an angle with the driving member, the anchoring member is advanced in a second curvilinear direction that is at an angle with the first direction. The anchoring member is advanced through the curved fusion member channel and into the vertebral body. As the fusion member channel is curved, the path that the anchoring member travels is also curved. In other words, the anchoring member traverses in a second direction that is curved throughout its advancement through the fusion member channel. Accordingly, from the initial configuration of the anchoring mechanism to its final configuration, the tip of the anchoring member travels in a semi-circular path of movement.

Once the driving members **1430-1440** push the anchoring members **1410-1420** into the vertebral bodies, hardening material (e.g., PMMA, bone cement, or other hardening polymer) may be injected through the central lumen of the driving members, through the central lumen of the anchoring members, and into the marrow space of the vertebral bodies.

FIG. **16** illustrates a perspective view of the anchoring members **1410-1420**. As shown in this figure, the anchoring members **1410-1420** have (1) several (e.g., three) distal perforations **1605-1630**, (2) central lumens **1635-1640**, (3) flanged bases **1645-1650**, and (4) female coupling components **1655-1660** that couple with male coupling components of intervening or driving members, as further described below.

The distal perforations **1605-1630** of the anchoring members **1410-1420** communicate directly with the central lumens **1635-1640** of the anchoring member. These lumens **1635-1640** extend from the distal perforations **1605-1630** to the flanged bases **1645-1650** and their proximal openings **1665-1670**. Polymer material can be injected through the central lumen of the driving and intervening members, into the openings **1665-1670** of the anchoring members **1410-1420**, through the central lumens **1635-1640** of the anchoring members **1410-1420**, and out of the perforations **1605-1630** to be delivered to the marrow space of vertebral bodies.

As shown in FIG. **16**, the anchoring members **1410-1420** in some embodiments have surface contours **1675-1680** along their distal segment. In some embodiments, these surface contours may be angled teeth, back-facing retention ridges, or other surface contours. These surface contours assist in the retention of the anchoring members **1410-1420** within the vertebral bodies after injection and hardening of PMMA thereby further solidifying the anchoring of the fusion member **120** between the vertebral bodies.

As shown in FIG. **16**, flanges **1645-1650** at the base of the anchoring members **1410-1420** fit into recesses (i.e., flange cavity, anchoring member cavity, etc.) **1685-1690** of the fusion member channels locking the anchoring members **1410-1420** to the fusion member **120** once the anchoring members are fully advanced through the fusion member's channels. FIG. **17** illustrates the flange cavities **1720** at the proximal end of each fusion member channel **1730** that aid in affixing each anchoring member to the fusion member **120** when the anchoring members are fully advanced. In this figure, the anchoring members have not been fully advanced through the fusion member's channels to provide a clear illustration of fusion member's flange cavities **1720** and the flange bases **1710** of the anchoring members.

In some embodiments, the flange cavity's shape and the anchoring member's base shape may slightly differ. This shape difference still allows the anchoring member to be inserted into fusion member channel, but provides friction between the flange base of the anchoring member and the flange cavity of the fusion member channel, when the anchoring member has been fully advanced, to lock the anchoring member to the fusion member. In some embodiments, the flange cavity may have at least one tooth (not pictured) protruding toward the center of the cavity opening that locks the anchoring member to the fusion member when the anchoring member is fully advanced through the fusion member's channels. In addition, this tooth prevents the anchoring member from rotating when the driving member is uncoupled from the anchoring member, which will be described detail in FIGS. **24**A-**24**B.

In some embodiments, the anchoring member can be composed of a material or a combination of materials that provides flexibility as shown in FIG. **18**. To provide flexibility, the anchoring member can be composed of materials such as nitinol, stainless steel, titanium or other metals, metallic alloys, or high density polymers, carbon fiber, collagen or other biological materials, completely absorbable or partially absorbable material, or of a combination of these materials. In some embodiments, the tip of the anchoring member may be open or closed.

As mentioned above, some embodiments of the invention provide coupling mechanisms that couple the anchoring

members directly to their corresponding driving members **1430-1440**. As illustrated in FIG. **14**, other embodiments include intervening members **1470-1480** that (1) couple the driving members **1430-1440** with the anchoring members **1410-1420** and (2) provide pivoting mechanisms **1490-1495** for enabling the anchoring members **1410-1420** and the intervening members **1470-1780** to pivot with the driving members **1430-1440**. In some embodiments, the anchoring members, driving members, and intervening members all couple together to form a unified needle.

FIGS. **19-21** illustrate the driving members **1900** and the anchoring members **1910** coupled with the intervening members **1920**. As shown in these figures, each driving member includes a shaft **2030** that can advance the anchoring member **1910** fully into the fusion member (not pictured) and can withdraw the anchoring member **1910** partially or fully from the fusion member. Each driving member also includes two pins **2020** that mate with two holes in an intervening member **1920** to enable the pivoting of the intervening member **1920** about the driving member **1900**. Lastly, each driving member includes a central lumen **2110** (as shown in FIG. **21**) that provides a conduit for delivering polymers to the anchoring member **1910**. The central lumen extends the entire length of the driving member **1900**, the intervening member **1920**, and the anchoring member **1910**.

FIGS. **20-21** show different views of the distal end of the driving member **1900** and the intervening member **1920** in relation to the anchoring member **1910**. In these figures, the driving member **1900** and intervening member **1920** are shown in their coupled and decoupled configurations with the anchoring member **1910**. The driving member **1900** and the intervening member **1920** couple via the coupling mechanism **1450**. The coupling mechanism includes a male member **2010** located on the intervening member **1920** and a female member **2015** located on the anchoring member **1910**. The male member **2010** includes a protruding stub encompassing the central lumen **2110** of the intervening member **1920**. It also includes an arm **2040** and a slot **2060** behind the arm **2040**. The female member **2015** includes an indentation that leads to the central lumen **2110** of the anchoring member **1910**. It also includes an arm **2050** and a slot behind the arm **2070** that complements and rotatably couples with the slot **2060** and the arm **2040** of the male member **2010**. To separate the coupling mechanism **1450**, the intervening member **1920** may be rotated by rotating the driving member shaft **2030** until the interlocking arms **2040-2050** exit the slots **2060-2070** in which they were inserted, and the arms **2040** of the male member **2010** and arms **2050** of the female member **2015** clear each other, as further described below by reference to FIGS. **24**A-**24**B.

The intervening member **1920** also includes two holes that mate with the two pins of the driving member. As mentioned above, the mating allows the intervening member **1920** to pivot with the driving member **1900** and additionally couples the driving member **1900** with the intervening member **1920**. FIGS. **22**A-**22**B illustrate exploded views of the pivoting mechanism from different perspectives. As shown in these figures, the pivoting mechanism comprises protruding pegs (i.e., pins) **2210** on the distal end of the driving member shaft, and holes **2220** for engaging the pegs **2210**. In some embodiments, the protruding pegs **2210**, and the holes **2220** are round to allow the intervening member **1920** to pivot around the driving member **1900**. In some embodiments, the distal end of the driving member shaft is rounded at the tip **2230**, and fits into a rounded concave indentation **2240** of the intervening member **1920**. This also facilitates the pivoting motion between the intervening member **1920** and the driving member **1900**. The pivoting movement between the driving member **1900** and the intervening member **1920** facilitates the advancement of the anchoring members **1910** through the channels of the fusion member in a circular motion.

Once the anchoring member **1910** has been fully advanced through the fusion member channels and into the vertebral bodies, the pivoting mechanism aligns the driving members **1900**, intervening members **1920**, and the anchoring members **1910** as illustrated in FIG. **19**. This alignment allows the central lumens **2110** of the driving members **1900**, the intervening members **1920**, and the anchoring members **1910** to align, providing an unobstructed pathway for the delivery of polymer through the driving members **1900**, the intervening members **1920**, and the anchoring members **1910** into the vertebral bodies.

2. Non-Pivoting Anchoring Mechanism

In some embodiments, the driving members **2320** connect directly to the anchoring members **2310** (i.e., no intervening member) as shown in FIGS. **23**A-**23**B. When coupled together, the anchoring member and driving member form a unified entity, the anchoring needle. In some embodiments, the anchoring member is the embedded portion that is embedded in the vertebral bodies while the driving member is the retractable portion that is removed once the fusion member has been affixed to the vertebral bodies between which it is placed.

In the embodiment illustrated in FIGS. **23**A-**23**B, the driving member's distal end includes the male member **2510** which directly couples with the female member **2520** of the anchoring member **2310** (the male member **2510** and female member **2520** are shown clearly in FIGS. **25**A-**25**D). The male member **2510** of the coupling mechanism is directly integrated into the distal end of the driving member. The female member of the coupling mechanism is directly integrated into the proximal end of the anchoring member.

In FIGS. **24**A-**24**B, three configurations of the coupling mechanism **1450** are shown. These figures illustrate a fully coupled configuration **2450** of the anchoring member with the driving member, a partially coupled configuration **2460**, and a fully decoupled configuration **2470**. FIGS. **25**A-**25**D provide detailed illustrations of the coupling mechanism.

As shown in FIGS. **24-25**, the coupling mechanism **1450** couples the anchoring member with the driving member. A similar coupling mechanism **1450** was mentioned above for coupling intervening member **1920** and anchoring member **1910** of FIG. **19**. In FIGS. **24-25**, the coupling mechanism includes a male member **2510** and a female member **2520**. The male member includes a protruding stub encompassing the central lumen of the driving member. It also includes an arm **2530** and a slot **2550** behind the arm **2530**. The female member **2520** includes an indentation that leads to the central lumen of the anchoring member. It also includes an arm **2540** and a slot **2560** behind the arm **2540** that complements and rotatably couples with the slot **2550** and the arm **2530** of the male member **2510**.

As mentioned above, the coupling mechanism is integrated into the distal end of the driving member in some embodiments (e.g. anchoring needle in FIGS. **24**A-**24**B), while other embodiments utilize the intervening member and integrate the coupling mechanism into the intervening member. In either configuration, the anchoring member may detach from the driving member or intervening member by separating the coupling mechanism. To separate the coupling mechanism, the driving member shaft may be rotated until the interlocking arms **2530-2540** exit the slots **2550-2560** in which they were inserted, and the arms **2530** of the male member **2510** and arms **2540** of the female members **2520** clear each other, as

shown in the configuration **2460** of FIGS. **24**A-**24**B. Once the interlocking arms are clear of each other, the driving member and the intervening member may be pulled away and removed from the anchoring member, as shown in the configuration **2470**. The separation of the coupling mechanism occurs when the fusion member has been properly positioned and after the polymer is injected (as further described by reference to FIGS. **26**-**28**).

As mentioned above, the delivery housing channel of some embodiments can be circular and constant in diameter throughout the entire length of the channel as described above in FIGS. **7**A-**7**C. In some such embodiment, the flexibility of the anchoring member enables the anchoring member to be advanced through the curved channel of the fusion member.

FIGS. **26**-**28** illustrate an example of the injection of PMMA, or other bone cement or hardening polymer, through the anchoring members and into the vertebral bodies. Any number of known techniques/procedures for injecting PMMA into the anchoring member can be used. One such technique involves injecting or pumping PMMA into the anchoring member through use of a needle or syringe.

In this example, two anchoring members are inserted into the two channels of a fusion member. One of ordinary skill will realize that the same operations can be performed for the embodiments that use four anchoring members through a fusion block with four channels as further described in Section V.

In FIGS. **26**A-**26**C provide different views of two anchoring members **2610** that are fully advanced through the fusion member channels and into the marrow space of adjacent vertebral bodies **2620** immediately above and below the fusion member **120**. Polymer can be injected through the central lumen of the anchoring members and out of the perforations of the anchoring members into the immediate surrounding area within the marrow space of the penetrated vertebrae. FIGS. **27**A-**27**B depict different views of the coalescence of the polymer collections **2710**-**2720** that result following injections of these polymers via anchoring members **2610**, respectively. The coalescence **2710**-**2720** of these polymers forms a spherical or ellipsoidal "cloud" contiguous with the tip **2730**-**2740** of the anchoring members **2610**. In its initial state, the polymer is in a semi-fluid state or in a gel-like state that allows it to flow through the anchoring member channel and the openings of its tip to fill in the marrow space of the vertebral body and the contours of the anchoring member tip. However, within a short period of time, the polymer hardens within the marrow space, resulting in a structural union between anchoring members **2610**, vertebral bodies **2620**, and the fusion member **120**. The contoured tips of the anchoring members in conjunction with the hardened polymer prevent withdrawal of the anchoring member **2610** from the trabecular bone and enhances the structural integrity of the fusion member **120**. The final result is an intervertebral fusion member **120** anchored via multiple anchoring members **2610** to collections of hardened polymer **2710**-**2720** (e.g., PMMA or other bone cement) and to the trabecular bone of adjacent vertebral bodies **2620** yielding solid mechanical fusion. Once the anchoring members are in place, and the polymer has been injected into the marrow space of the vertebral bodies, the driving members may be disengaged from the anchoring members and removed from the patient.

Some embodiments insert more than one fusion member between a pair of adjacent vertebral bodies. One such example is illustrated in FIGS. **28**A-**28**B. These figures depict (1) placement of two fusion members **2810**-**2820** within the right and left paramedian disc space of vertebral bodies **2870**-**2880**, (2) multiple sets of anchoring members into the vertebral bodies **2870**-**2880**, and (3) coalescence of polymer "clouds" **2830**-**2860** following the polymer injections. The resultant polymer clouds from adjacent tips of anchoring members may form upon polymerization. The clouds along with multiple contoured and perforated anchoring members lock the fusion members **2810**-**2820** to the trabecular bone of vertebral bodies **2870**-**2880**.

3. Anchoring Member

As mentioned above in reference to FIG. **18**, the anchoring member can be composed of a material or a combination of materials that provides flexibility as shown in. To provide flexibility, the anchoring member can be composed of materials such as nitinol, stainless steel, titanium or other metals, metallic alloys, or high density polymers, carbon fiber, collagen or other biological materials, completely absorbable or partially absorbable material, or of a combination of these materials. In some embodiments, the tip of the anchoring member may be open or closed.

In some embodiments, the anchoring member can be composed of a bio-absorbable polymer (such as collagen). Bio-absorbable polymer (e.g., collagen) allows the anchoring member to be resorbed by the patient (e.g., three to four months in the case of collagen) after the anchoring member has been inserted into the vertebral body of the patient. Some such bio-absorbable material (like collagen) also provides flexibility to allow the anchoring member to have a range of motion from 0 to 90 degrees. In some embodiments, the shaft of the anchoring member can be composed of bio-absorbable material (e.g., collagen) while the tip of the anchoring member can be composed of another material (e.g., nitinol) to facilitate penetration of the anchoring member into the vertebral body.

D. Fusion Apparatus

In some embodiments, the intervertebral fusion apparatus that includes the anchoring member, fusion member, and delivery member is already pre-assembled. In some embodiments, the delivery housing and the retention rods are assembled to form the delivery mechanism. The fusion member is coupled to the delivery mechanism by the retention rods. The anchoring member is coupled to the driving member to form the anchoring mechanism.

However, in different embodiments, the fusion apparatus may be pre-assembled to different degrees. For instance, in some embodiments, the anchoring mechanism may be pre-assembled to varying degrees in relation to the fusion member and the delivery mechanism. In some embodiments, the tip of the anchoring member of the anchoring mechanism is partially inserted in the fusion member channel. In other embodiments, the tip of the anchoring member is inserted into the channel of the delivery housing but not in the fusion member channel. Yet, in other embodiments, the anchoring mechanism is not inserted at all in the fusion member channel or in the delivery housing channel and may be inserted into the apparatus when needed.

IV. EXAMPLE OF A FUSION PROCEDURE

The operation of apparatus **110** will now be described. FIG. **29** depicts a medical procedure **2905** that involves the insertion of the apparatus **110** of some embodiments of the invention. In this procedure, a medical practitioner (e.g., a physician) initially performs (at **2910**) a partial or complete discectomy, which typically involves making an incision in a patient and removing some or all of the fibrocartilaginous disc between two adjacent vertebral bodies. Any number of known techniques/procedures can be used to remove the disc at **2910**.

Next, the medical practitioner inserts the intervertebral fusion device (at **2915**) and positions (at **2915**) the fusion member (e.g., one of the blocks described above) between the endplates of adjacent vertebrae. Any number of known techniques/procedures for inserting a fusion member between two adjacent vertebrae can be used (at **2915**) to insert the intervertebral fusion device and position the interbody fusion member between adjacent vertebrae. One technique for inserting the fusion member involves the use of one of the delivery mechanisms (e.g., apparatus **110** described above). In some embodiments, a radiograph or x-ray of the patient may be taken (at **2915**) to determine if the fusion member is placed at an appropriate position between two vertebral bodies. If not, the medical practitioner can use (at **2915**) the delivery mechanism to reposition the fusion member to the desired location.

Once the fusion member has been properly positioned, the medical practitioner passes (at **2920**) at least one anchoring member (e.g., large gauge needle) through the fusion member channels (at **2915**) and advances the anchoring member into the marrow space of the adjacent vertebral body by applying force on the proximal end of the driving member. In some embodiments, a flange at the base of each anchoring member fits into a recess of increased diameter where the tubular channel meets the exposed surface of the fusion member, in order to lock the anchoring member's position, anchoring it to the fusion member, as described above.

In some embodiments, the medical practitioner exerts force on the driving member by tapping, hammering, or simply pushing at its proximal end to advance the anchoring member into the vertebral body, which the anchoring member encounters as it exits the fusion member channel in which it is inserted. To facilitate this penetration, the medical practitioner in some embodiments inserts a smaller gauge anchoring member into the channel of the fusion member and into the marrow space of the adjacent vertebral body before inserting the anchoring member at **2920**. This creates a guide to help ensure the anchoring member will be advanced into the proper position within the trabecular bone of the vertebral body. In some embodiments, a radiograph may be taken of the anchoring members in relation to the marrow space of the vertebral bodies to determine if the anchoring members need to be repositioned. In other embodiments, a robotic arm may be used to advance the anchoring member into the vertebral body.

Once the anchoring member is in position, the medical practitioner (at **2925**) injects polymethyl methacrylate (PMMA), other bone cement, or polymer through the central channels of the driving member, intervening member (if any) and the anchoring member, through the anchoring member's openings/perforations, and into the marrow space of the vertebral body. Ideally, the injected material forms a spherical or ellipsoidal cloud of polymer material (e.g., PMMA) contiguous with the tip of the anchoring member.

In some embodiments, multiple anchoring members coupled with the driving member(s) may be advanced through multiple channels of the delivery housing and the fusion member into the same vertebral body. PMMA or other bone cement or polymer may be injected through the central lumen of these additional anchoring members. Accordingly, after **2925**, the medical practitioner determines (at **2930**) whether additional anchoring members need to be inserted into the fusion member inserted (at **2920**). If so, the medical practitioner inserts (at **2920**) additional anchoring member(s) through another channel of the fusion member, and injects (at **2925**) polymer material through the central lumen of the additional anchoring member and through its openings/perforations into the marrow space of vertebral body. The resultant polymer (PMMA) clouds from adjacent tips of the anchoring member may unite to form a single larger cloud upon polymerization, with multiple contoured and perforated anchoring members locked to the fusion member and anchored to the solid PMMA and trabecular bone of the vertebral body. The final result is an intervertebral fusion member anchored via multiple contoured, perforated anchoring members to collections of PMMA and to the trabecular bone of adjacent vertebral bodies yielding solid mechanical fusion.

When a determination has been made that the insertion of additional anchoring members is not necessary, the medical practitioner (at **2935**) uncouples the driving member from the anchoring member and removes the driving member from the delivery housing and from the patient. In some embodiments, robotic arms may be used to uncouple the driving member from the anchoring member and remove the driving member from the delivery housing.

Once the driving member has been removed from the patient and the delivery housing is no longer needed, the medical practitioner uncouples the retention rods from the fusion member. In some embodiments, this is achieved by rotating the retention rods 180 degrees so that the retention teeth of the retention rods disengage (at **2940**) from the retention grooves of the fusion member. Once uncoupled, the retention rods may be separated from the fusion member, and the delivery housing along with the retention rods may then be removed (at **2940**) from the patient. In some embodiments, robotic arms may be used to uncouple the retention rods from the fusion member and remove the retention rods from the delivery housing.

In some embodiments, more than one fusion member is inserted between two adjacent vertebral bodies. Accordingly, the medical practitioner determines (at **2945**) whether another fusion member needs to be inserted between the vertebral bodies between which the last fusion member was inserted (at **2915**). If so, the medical procedure is repeated from **2915** to **2940**. Also, in some embodiments, the medical procedure **2905** is performed multiple times to replace multiple discs between multiple pairs of vertebral bodies.

V. ALTERNATIVES SHAPES AND STRUCTURES

A. Arc Shaped Fusion Member Channels Traversing in a Parallel Cross-Sectional Plane

The shape and composition of the fusion members and the anchoring members are different in different embodiments of the invention. For instance, in some embodiments, the anchoring members and the fusion-member channels are in shape of an arc as depicted in FIGS. **30-33**. In these figures, one set of tubular fusion member channels **3020** and **3030** follow concentric semi-circular arcs to reach the inferior face of fusion member **3010**. The second set of tubular fusion member channels **3040** and **3050** follow concentric semi-circular arcs to reach the superior face of the fusion member **3010**. Each set of concentric arcs traverse along a cross-sectional plane that runs parallel to one of the fusion member surfaces.

These channels can be traversed by semi-circular arc shaped anchoring members, as illustrated in FIGS. **32-33**. Specifically, FIGS. **32-33** show passage of anchoring members through these semicircular tubular channels with anchoring members **3200** and **3210** passing into the marrow space of the vertebral body (not pictured) beneath the fusion member, and anchoring members **3220** and **3230** passing into the vertebral body contiguous with the superior face of the fusion

member (not pictured). Semi-circular arc-shaped channels and anchoring members simplify the process of inserting anchoring members into the channels, given the small space in which the fusion member is inserted between the vertebral bodies and the difficulty in accessing the proximal openings of the fusion member within the confines of the operative field. The anchoring members **3200-3230** are flexible in some embodiments, while being rigid in other embodiments.

FIG. **34** provides a detailed view of an anchoring member tip **3400** of some of the arc-shaped embodiments. As shown in this figure, a central lumen **3410** of the arc-shaped anchoring member of some embodiments is in direct communication with perforations **3420** along the anchoring member shaft as well as the "teeth" or retention ridges **3430**. This allows the polymer material to be delivered to the area adjacent to and between the angled teeth or retention ridges **3430**, such that these surface contours can engage the polymer materials when it hardens, locking the anchoring member in position within the trabecular bone, thereby locking the fusion member to the vertebral body.

In FIGS. **35-37**, an embodiment of the fusion member **3500** includes two curved semicircular channels **3510** and **3520**. This figure shows curved anchoring members **3530** and **3540** fully advanced through these channels and into the marrow spaces of the vertebral bodies (not pictured) below and above the fusion member. In FIG. **37**, a polymer has been injected to form "clouds" **3700** and **3710** adjacent to the perforated, contoured tips of anchoring members **3530** and **3540** within the marrow spaces of the adjacent vertebral bodies (not pictured). In this series of figures, channels **3510** and **3520** traverse cross-sectional planes parallel to one another as well as the lateral fusion member surfaces.

B. Fusion Member Channels Traversing in Non-Parallel Cross-Sectional Planes

One of ordinary skill in the art will realize that different configurations of the fusion member channels can traverse in x-, y-, and z-directions. FIGS. **38-40** depict an alternate embodiment of the fusion member **3800** with curved channels **3810** and **3820** and curved channels **3830** and **3840** extending to inferior and superior faces of the fusion member, respectively. Channels **3820** and **3840** traverse cross-sectional planes parallel to one another, as do channels **3810** and **3830**. Both sets of channels traverse planes that are not parallel with any fusion member surface.

FIGS. **41-42** depict an alternate embodiment of a fusion member that includes straight uncurled channels **4120**. These channels traverse cross-sectional planes that are non-parallel with any surface of the fusion member, and additionally, traverse cross-sectional planes that are non-parallel with each other. The distal openings of these oblique, nonparallel channels **4120** are located at or near the geometric centers of the inferior and superior faces of the fusion member. As shown in these figures, the fusion member **4110** includes two channels **4120** that are traversed by anchoring members **4130** and **4140**, which are rectangular in cross-sectional profile to match the cross-sectional profile of the channels. FIG. **43** provides a detailed view of the anchoring members depicting the direct communication of the central anchoring member lumen **4300** with perforations **4310** along the anchoring member shaft as well as the "teeth" or retention ridges **4320** and a beveled tip **4330**. In FIGS. **44-45**, polymer has been injected and forms "clouds" **4400** and **4410** contiguous with the perforated, contoured tips of anchoring members **4130** and **4140** within the marrow spaces of adjacent vertebral bodies (not pictured).

FIGS. **46**A, **46**B, and **47** depict an alternate embodiment of the fusion member. Specifically, these figures depict a fusion member **4600**, which is similar to the fusion member **120** of FIG. **4**. Channels **4610** and **4620** traverse in parallel cross-sectional planes with respect to each other but are non-parallel with respect to the faces of the fusion member. FIG. **46**B illustrates that each of the channels **4610** and **4620** trace circular arcs that are a portion of two conceptual circles which traverse planes that are parallel to each other and non-parallel to all faces of the fusion member. These channels are traversed by curved anchoring members (not pictured). Although this embodiment provides for channels and anchoring members that trace the arcs of conceptual circles, other embodiments provide for alternative curved conceptual shapes (e.g. ellipses, parabolas, etc.). The distal openings of the channels **4610** and **4620** may be located at or near the geometric centers of the inferior and superior faces of the fusion member.

C. Alternative Anchoring Member Tips and Structures

As shown above, different embodiments use different shapes for the anchoring members (e.g., arc-shape, angled-shape, semi-circular shape, straight, etc.). Different embodiments also use different types of anchoring members. FIGS. **48**A-**48**B provide a detailed view of alternative embodiments **4801**, **4802**, and **4803** of anchoring member tips. As shown in the figures, the central lumen **4800-4810** of the anchoring members are in direct communication with perforations **4815**, **4820**, and **4825** along the anchoring member shaft as well as the "teeth", or retention ridges, **4830**, **4835**, and **4840**. FIG. **48**B illustrates that in some embodiments, the anchoring members have beveled tips **4804**.

In some embodiments, the maximum diameter or circumference of the segment of the anchoring member that includes retention ridges or other surface features intended to engage the polymer material (e.g., PMMA or bone cement) is less than or equal to the diameter or circumference of proximal and distal anchoring member segments. This allows the anchoring member to be hammered, tapped, or simply pushed into position within the marrow space of the vertebral bodies rather than being screwed into place.

FIGS. **48**C-**48**D illustrate that the anchoring members of some embodiments have threads. As shown, the threads may run the entire length of the anchoring member, from the base of the anchoring member to the tip of the anchoring member. In other embodiments (not shown), the threads run through only a segment of the anchoring member (i.e., less than the entire length of the anchoring member). The threads allow the anchoring members to be screwed into the desired position within the marrow space of the vertebral bodies. In some embodiments, the fusion member channels into which the anchoring members are advanced include grooves that compliment the threads of the anchoring members.

D. Fusion Members with Ridges and Additional Bone-Grafting Channels

FIG. **49** depicts various fusion member surface contour features including orthogonal ridges **4900**, angled ridges **4910**, and oblique parallel ridges **4920**. Longitudinal channels **4930** and **4940** and transverse channels **4950** and **4960** for positioning and retention of bone graft material are also illustrated. These surface contours and retention channels may be combined with any of the fusion member channel configurations previously described. Bone grafting channels may be of any size and position and allow for the positioning of bone grafting material between and in contact with the opposed endplates of the adjacent vertebral bodies as well as extending from one lateral face to another lateral face of the fusion member. Placement of the bone graft material in the

disc space surrounding the fusion member permits the progressive solid bony fusion between the fusion member and the adjacent vertebral bodies.

E. Retention Teeth and Retention Grooves of Variable Dimensions

In some embodiments, retention teeth and retention grooves are of variable width and height. FIGS. **50** and **51** illustrate a retention rod **5005** with retention teeth (only one tooth **5010** is shown) that engage with a set of larger diameter retention grooves **5120** of a retention groove set **5110** of a fusion member **5100**. In FIG. **50**, the retention tooth **5010** includes a directional decrease in tooth height and a directional decrease in tooth width when traversing the contour of the tooth in the indicated direction of rotation. The width **5020** of the retention tooth's leading edge is less than the width **5030** of the retention tooth's trailing edge. The height **5040** of the retention tooth's leading edge is less than the height **5050** of the retention tooth's trailing edge. The retention tooth tapers in two directions. Specifically the retention tooth (1) tapers in the radial direction (i.e. height), and (2) tapers in the lateral direction (i.e. width) when traversing the circumference of the tooth.

In FIG. **51**, the set of larger diameter retention grooves **5120** of the retention groove set **5110** also decreases in height and width when traversing the contour of the groove in the indicated direction of engagement to match the profile of the retention tooth **5010**. Specifically, the retention tooth **5010** is inserted first into opening **5130**, which exhibits greater height and width compared to opening **5140**. When the tooth's leading edge with smaller dimensions is fully engaged with the opening **5140** with smaller dimensions and the tooth's trailing edge with larger dimensions is fully engaged with the opening **5130** with larger dimensions, the retention rod can no longer be rotated. The tooth's flared shape and matching flared profile of the larger-diameter retention grooves **5120** of the retention groove set **5110** prevent the retention rod from being withdrawn laterally from the fusion member **5100**. When decoupling the retention rod from the fusion member **5100**, the retention tooth's trailing edge with smaller dimensions is the last to clear the larger diameter retention grooves, facilitating clearance and removal of the retention rod.

F. Various Configurations of Fusion Members and Anchoring Members

As mentioned above, some embodiments of the invention provide a fusion member with four channels and four anchoring members that are advanced into these fusion member channels as shown in FIG. **52**.

FIGS. **53-55** illustrate an example of the injection of PMMA, or other bone cement or hardening polymer, through the anchoring members and into the vertebral bodies. In this example, four anchoring members are inserted into the four channels of a fusion block. One of ordinary skill will realize that the same operations can be performed for the embodiments that use two anchoring members through a fusion block with two channels.

In FIG. **53**, anchoring members **5310-5340** are fully advanced through the fusion member channels and into the marrow space of adjacent vertebral bodies **5360-5370** immediately above and below the fusion member **5350**. Polymer can be injected through the central lumen of the anchoring members and out of the perforations of the anchoring members into the immediate surrounding area within the marrow space of the penetrated vertebrae. FIG. **54** depicts the coalescence of the polymer collections **5410-5420** that result following injections of these polymers via anchoring members **5310-5340**, respectively. The coalescence **5410-5420** of these polymers forms a spherical or ellipsoidal "cloud" contiguous with the tip of the anchoring members **5310-5340**. The polymer hardens within the marrow space, resulting in a structural union between anchoring members **5310-5340** in addition to anchoring each vertebral body **5360-5370** to the fusion member **5350**. The contoured tips of the anchoring members in conjunction with the hardened polymer prevent withdrawal of the anchoring members **5310-5340** from the trabecular bone and enhances the structural integrity of the fusion member **5350**. The final result is an intervertebral fusion member **5350** anchored via multiple anchoring members **5310-5340** to collections of hardened polymer (e.g., PMMA or other bone cement) and to the trabecular bone of adjacent vertebral bodies **5360-5370** yielding solid mechanical fusion. Once the anchoring members **5310-5340** are in place, and the polymer has been injected into the marrow space of the vertebral bodies, the driving members may be disengaged from the anchoring members and removed from the patient.

Some embodiments insert more than one fusion member between a pair of adjacent vertebral bodies. One such example is illustrated in FIG. **55**. This figure depicts placement of two fusion members **5510-5520** within the right and left paramedian disc space of vertebral bodies **5570-5580**, multiple sets of anchoring members advanced into the vertebral bodies **5570-5580**, and coalescence of polymer "clouds" **5530-5560** following the polymer injections. The resultant polymer clouds from adjacent tips of anchoring members may unite to form a single larger cloud upon polymerization. The united cloud along with multiple contoured and perforated anchoring members locks the fusion members **5510-5520** to the trabecular bone of vertebral bodies **5570-5580**.

VI. EMBODIMENTS THAT DO NOT USE POLYMER MATERIALS

While the invention has been described with reference to numerous specific details, one of ordinary skill in the art will recognize that the invention can be embodied in other specific forms without departing from the spirit of the invention. In some embodiments, the anchoring members may be without a central lumen or perforations along their shaft. In some embodiments, angled teeth, back-facing ridges, and other surface retention ridges may be greater in circumference or diameter than the more proximal or distal anchoring member segments. In these instances, after the anchoring members are advanced into the marrow space of the vertebral bodies, injection of polymer materials may not be needed to anchor the vertebral bodies to the fusion member. The surface contours of the anchoring members will anchor the vertebral bodies to the fusion member.

Also, in several of the above-described embodiments, the channels and anchoring members have circular-arc cross-sectional profiles. However, in other embodiments, the channels and anchoring members have alternative curved arc shapes.

I claim:

1. A fusion device comprising:

a fusion member configured to position between first and second vertebral bodies, the fusion member comprising a first curved channel and a second curved channel;

a first anchoring member configured to insert through the first curved channel and partially into the first vertebral body while a portion of the first anchoring member remains within the fusion member, in order to couple the fusion member with the first vertebral body; and

a second anchoring member configured to insert through the second curved channel and partially into the second vertebral body while a portion of the second anchoring

member remains within the fusion member, in order to couple the fusion member with the second vertebral body,

wherein the first curved channel has a first cross-sectional plane along a first path that is traversed by the first curved channel through the fusion member and the second curved channel has a second cross-sectional plane along a second path that is traversed by the second curved channel through the fusion member, wherein the first and second cross-sectional planes are parallel to each other.

2. The fusion device of claim **1**, wherein the first and second cross-sectional planes are parallel to at least one surface of the fusion member.

3. The fusion device of claim **1**, wherein neither of the first and second cross-sectional planes is parallel to at least one surface of the fusion member.

4. The fusion device of claim **1**,

wherein the first curved channel opens to at least two surfaces of the fusion member and the second curved channel opens to at least two surfaces of the fusion member,

wherein the first cross-sectional plane is not parallel to either of the two surfaces to which the first curved channel opens and the second cross-sectional plane is not parallel to either of the two surfaces to which the second curved channel opens.

5. The fusion device of claim **1**,

wherein the first and second curved channels open to a first surface of the fusion member but the first curved channel traverses to a second surface of the fusion member and the second curved channel traverses to a third surface of the fusion member;

wherein the traversal of the first and second curved channels through the fusion member allows (i) the first anchoring member to enter the first surface of the fusion member but exit the second surface of the fusion member at a first desired location on the second surface of the fusion member and (ii) the second anchoring member to enter the first surface of the fusion member but exit the third surface of the fusion member at a second desired location on the second surface without hindering the first anchoring member's insertion through the fusion member.

6. The fusion device of claim **5**, wherein the first desired location is the geometric center of the second surface of the fusion member and the second desired location is the geometric center of the third surface of the fusion member.

7. The fusion device of claim **1**,

wherein each anchoring member is configured to couple to a driving member,

wherein the driving member is configured to drive the anchoring member into the corresponding vertebral body and decouple from the anchoring member.

8. The fusion device of claim **1**, wherein the first and second anchoring members are made of a flexible material to allow the first and second anchoring members to bend to traverse through the first and second curved channels.

9. The fusion device of claim **1**,

wherein each channel of the fusion member has an opening on a surface of the fusion member and the opening has a recess,

wherein each anchoring member has a base that fits within the recess of the channel associated with the anchoring member in order to maintain the anchoring member at least partially in the fusion member while the anchoring member is inserted into the vertebral body.

10. The fusion device of claim **1**, wherein each anchoring member comprises a perforation for delivering a hardening material to a location where the anchoring member is inserted into the corresponding vertebral body.

11. A fusion device comprising:

a fusion member for positioning between first and second vertebral bodies, the fusion member comprising a first channel and a second channel;

a first arc-shaped anchoring member for inserting through the first channel and partially into the first vertebral body while a portion of the first arc-shaped anchoring member remains within the fusion member, in order to couple the fusion member with the first vertebral body; and

a second arc-shaped anchoring member for inserting through the second channel and partially into the first vertebral body while a portion of the second arc-shaped anchoring member remains within the fusion member, in order to couple the fusion member with the first vertebral body,

wherein the first channel has a first cross-sectional plane along a first path that is traversed by the first channel through the fusion member and the second channel has a second cross-sectional plane along a second path that is traversed by the second channel through the fusion member, wherein the first and second cross-sectional planes are the same plane and the same plane is parallel to a surface of the fusion member.

12. The fusion device of claim **11**, wherein the first arc-shaped anchoring member and the second arc-shaped anchoring member enter a first surface of the fusion member and exit a second surface of the fusion number and the first and second surfaces are adjacent to each other.

13. The fusion device of claim **11**, the fusion device further comprising:

a first driving member for advancing the first arc-shaped anchoring member into the first vertebral body;

a first coupling mechanism for coupling the first arc-shaped anchoring member with the first driving member;

a second driving member for advancing the second arc-shaped anchoring member into first the vertebral body;

a second coupling mechanism for coupling the second arc-shaped anchoring member with the second driving member;

wherein the first coupling mechanism comprises a first pivoting mechanism for allowing the first arc-shaped anchoring member to pivot around the first driving member and the second coupling mechanism comprises a second pivoting mechanism for allowing the second arc-shaped anchoring member to pivot around the second driving member.

* * * * *