United States Patent [19]

Steffee

[11] **Patent Number: 4,790,303**

[45] **Date of Patent: Dec. 13, 1988**

[54] **APPARATUS AND METHOD FOR SECURING BONE GRAFT**

[75] Inventor: **Arthur D. Steffee,** Moreland Hills, Ohio

[73] Assignee: **AcroMed Corporation,** Cleveland, Ohio

[21] Appl. No.: **24,577**

[22] Filed: **Mar. 11, 1987**

[51] **Int. Cl.**[4] **A61F 5/04**

[52] **U.S. Cl.** ..... **128/924 M;** 128/924 J; 128/924 C

[58] **Field of Search** ..... 128/92 YF, 92 YC, 92 YJ, 128/92 YM, 92 YD, 92 YE

[56] **References Cited**

U.S. PATENT DOCUMENTS

4,047,523	9/1977	Hall	128/924 M X
4,135,506	1/1979	Ulrich	128/92 Y R
4,369,770	1/1983	Bacal et al.	128/924 M X
4,404,967	9/1983	Bacal et al.	128/924 M X
4,438,769	3/1984	Pratt et al.	128/92 YC
4,454,875	6/1984	Pratt et al.	128/92 YC
4,462,395	7/1984	Johnson	128/92 YC
4,503,847	3/1985	Mouradian	128/92 YZ
4,570,618	2/1986	Wu	128/924 J X
4,570,623	2/1986	Ellison et al.	128/92 YC

FOREIGN PATENT DOCUMENTS

2649042	9/1978	Fed. Rep. of Germany	128/924 M

OTHER PUBLICATIONS

Journal of Bone & Joint Surg., vol. 38-A#5, Oct. 1956, pp. 1156-1158, "Boat-Nail Fixation of Tendon & Ligaments to Cancellous Bone", by Lt. Col. R. W. Augustine et al.

Primary Examiner—Robert A. Hafer
Assistant Examiner—Kevin G. Rooney
Attorney, Agent, or Firm—Tarolli, Sundheim & Covell

[57] **ABSTRACT**

A fastener for securing bone graft between a pair of bone portions. The fastener includes a curved elongated member having a shank for extending into the bone graft and pair of bone portions. The shank has an end portion which receives a force for driving the shank into the pair of bone portions and the bone graft. The shank has a plurality barbs projecting therefrom for resisting movement of the shank relative to the bone graft and the bone portions.

8 Claims, 5 Drawing Sheets

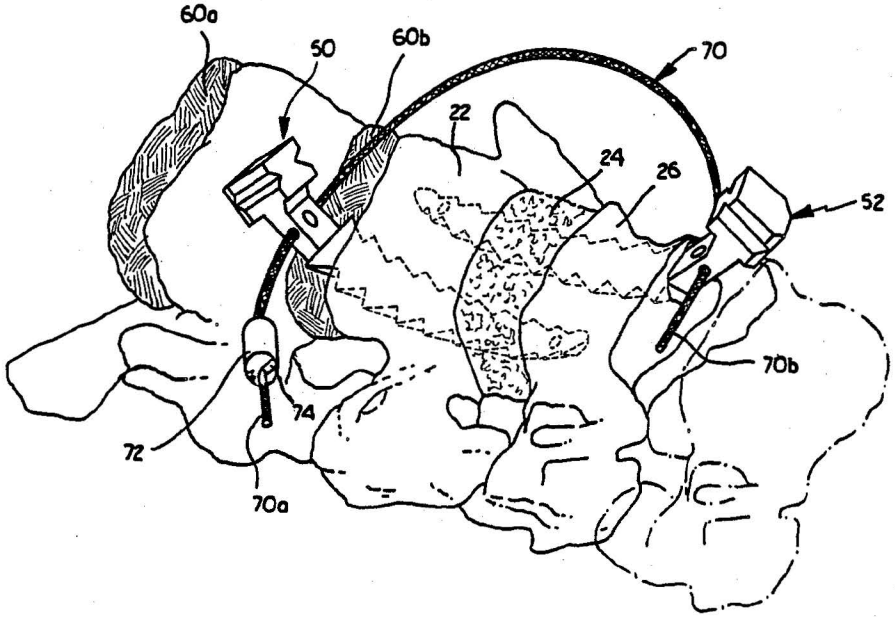

GLOBUS EX. 1005

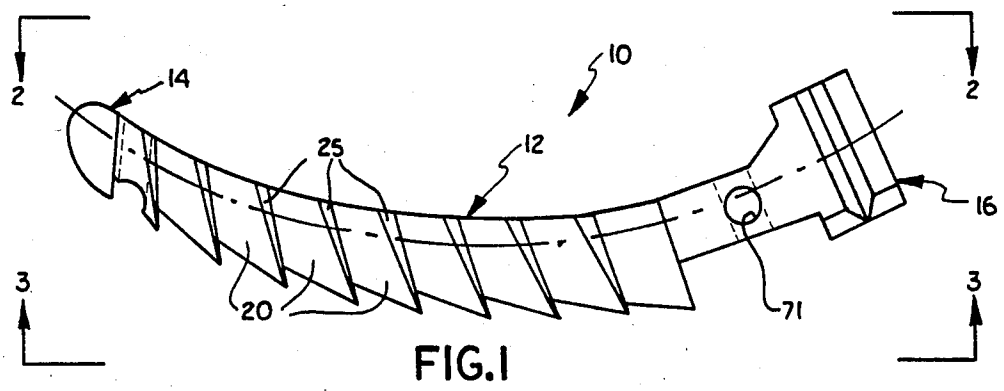

FIG.1

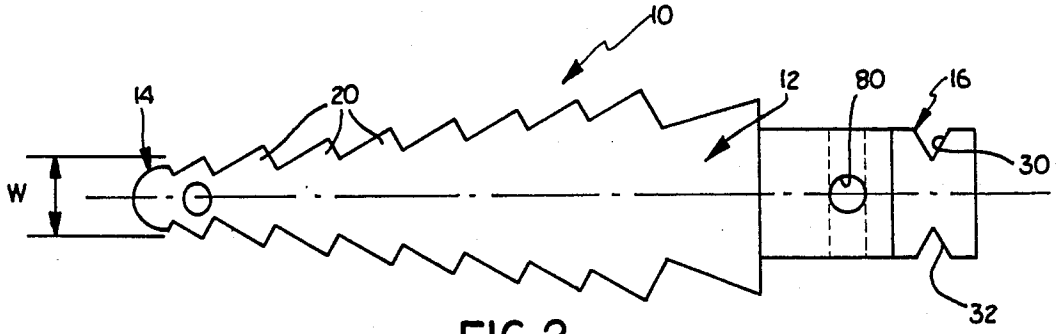

FIG.2

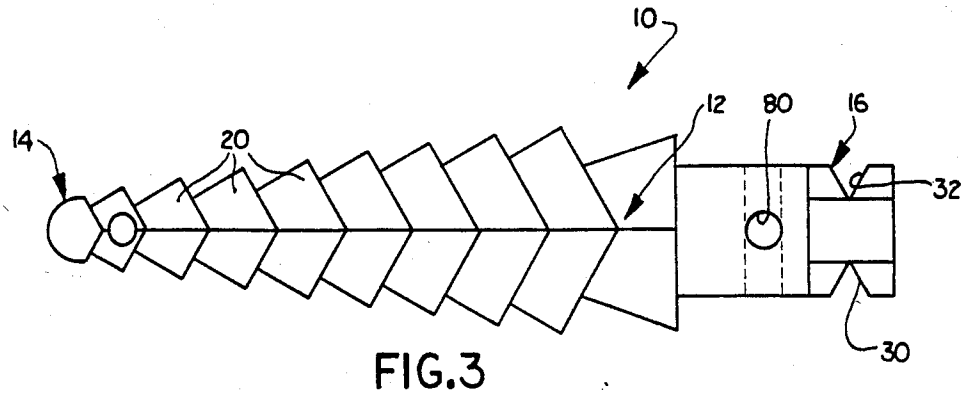

FIG.3

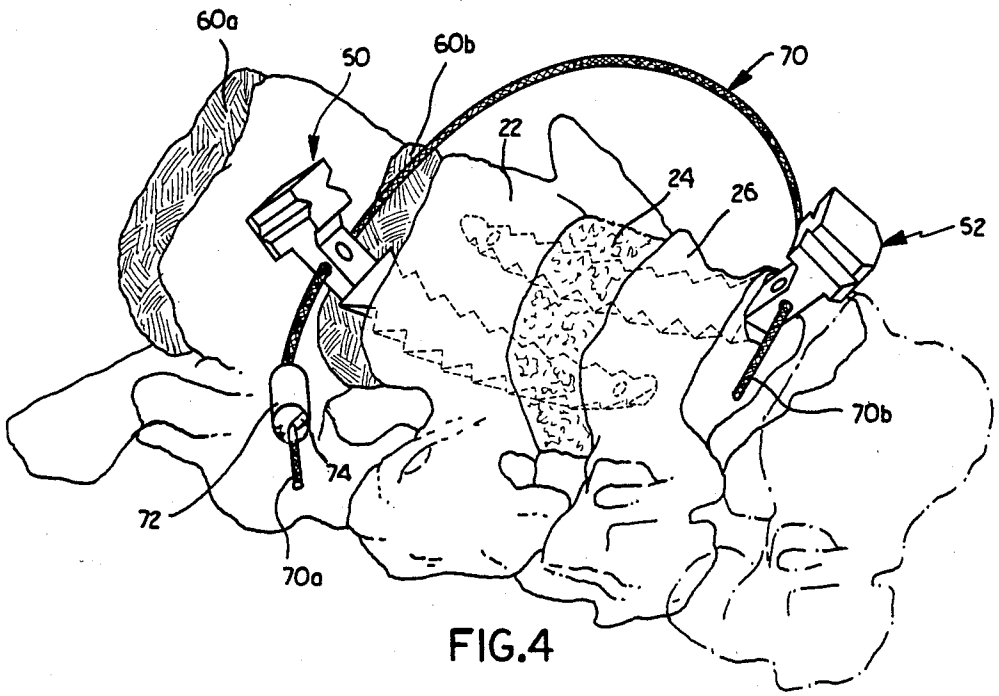
60a
50
60b
70
22
24
26
52
70b
74
72
70a

FIG.4

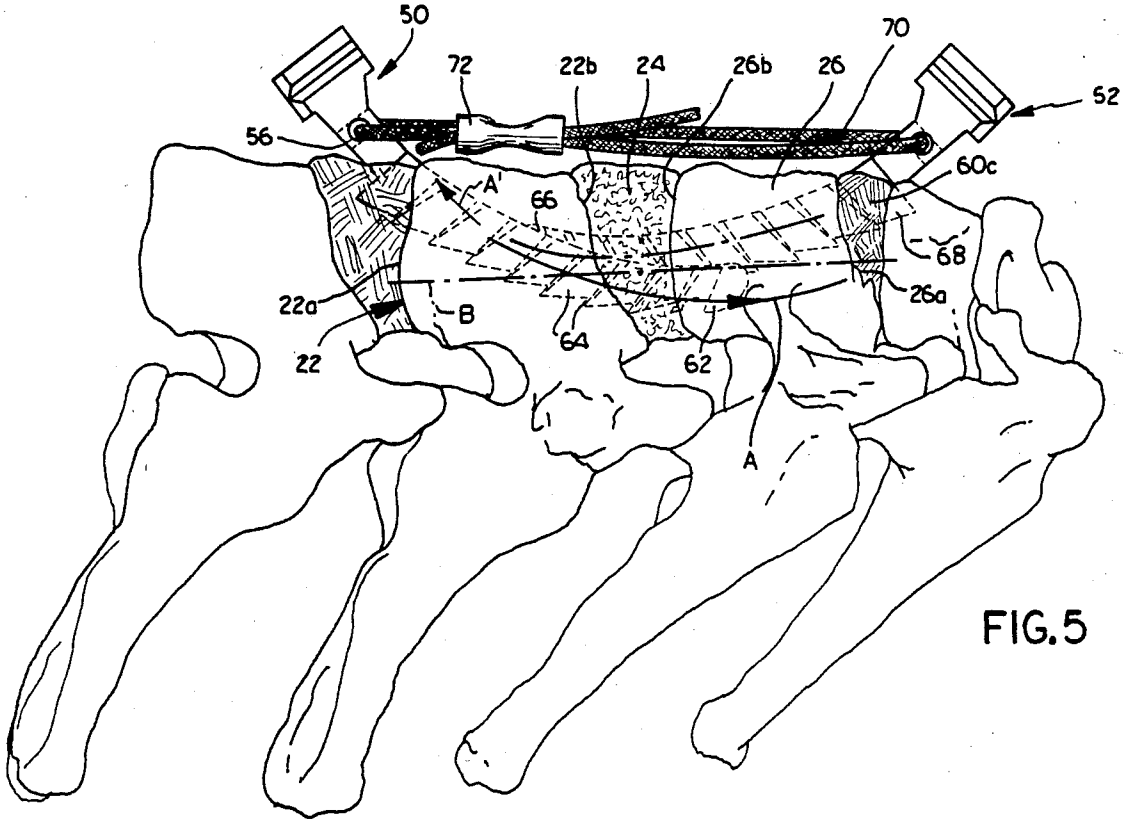
50
72
22b
24
26b
26
70
52
56
A'
66
60c
68
22a
B
26a
64
62
22
A

FIG.5

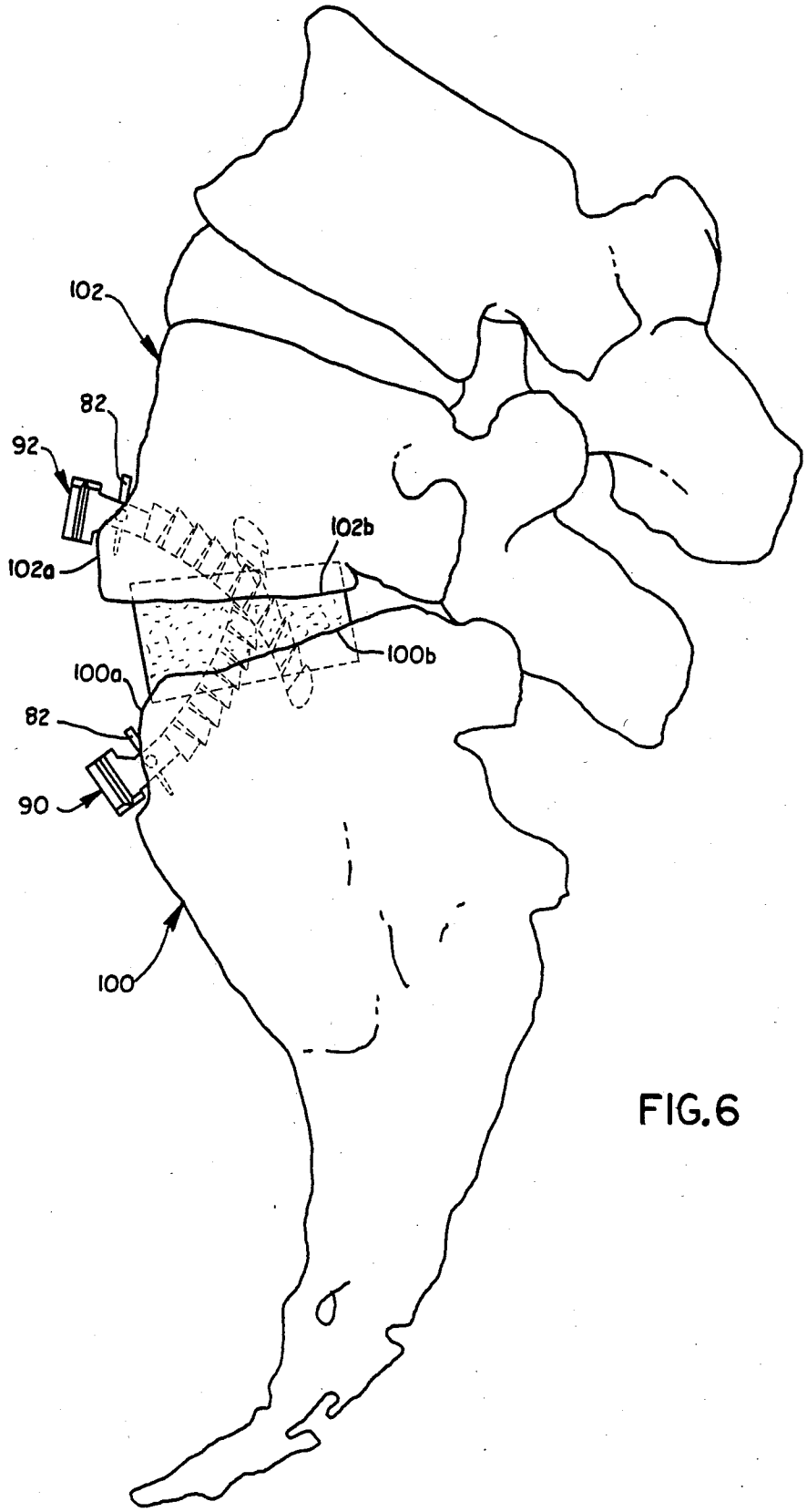

FIG.6

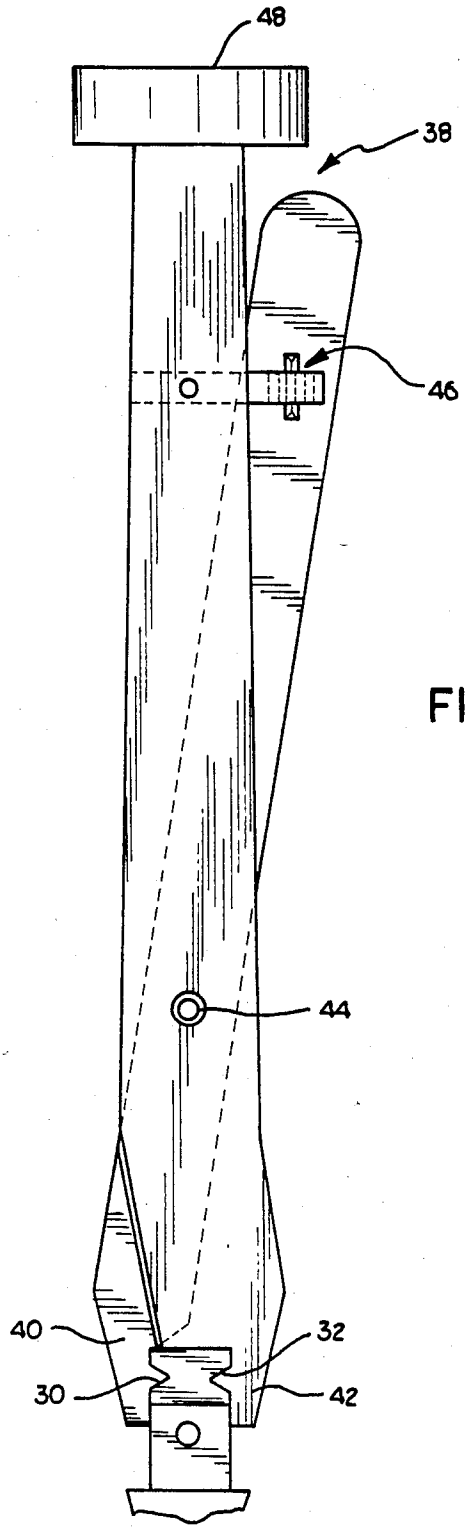

FIG.7

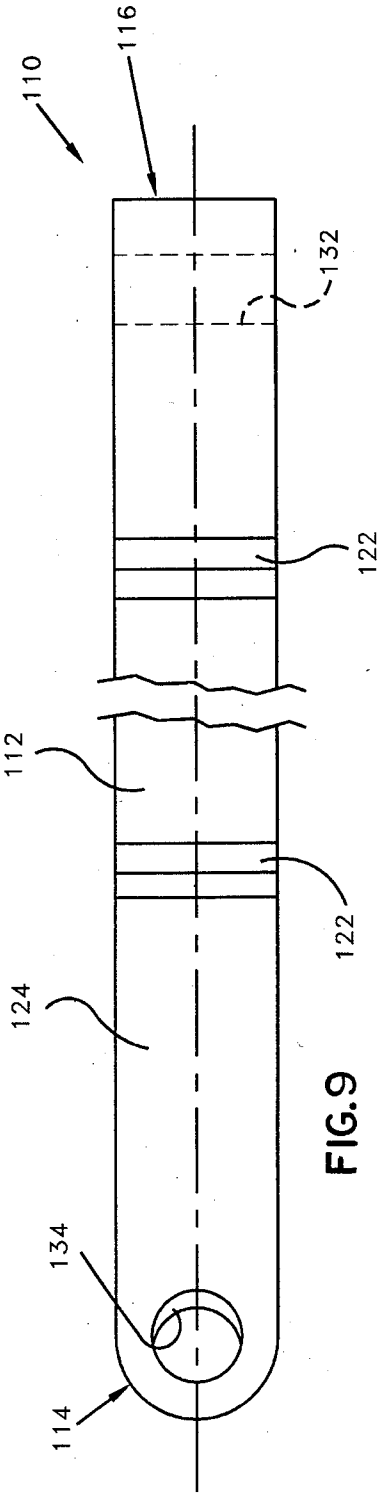
110
116
132
122
112
122
124
134
114

FIG.9

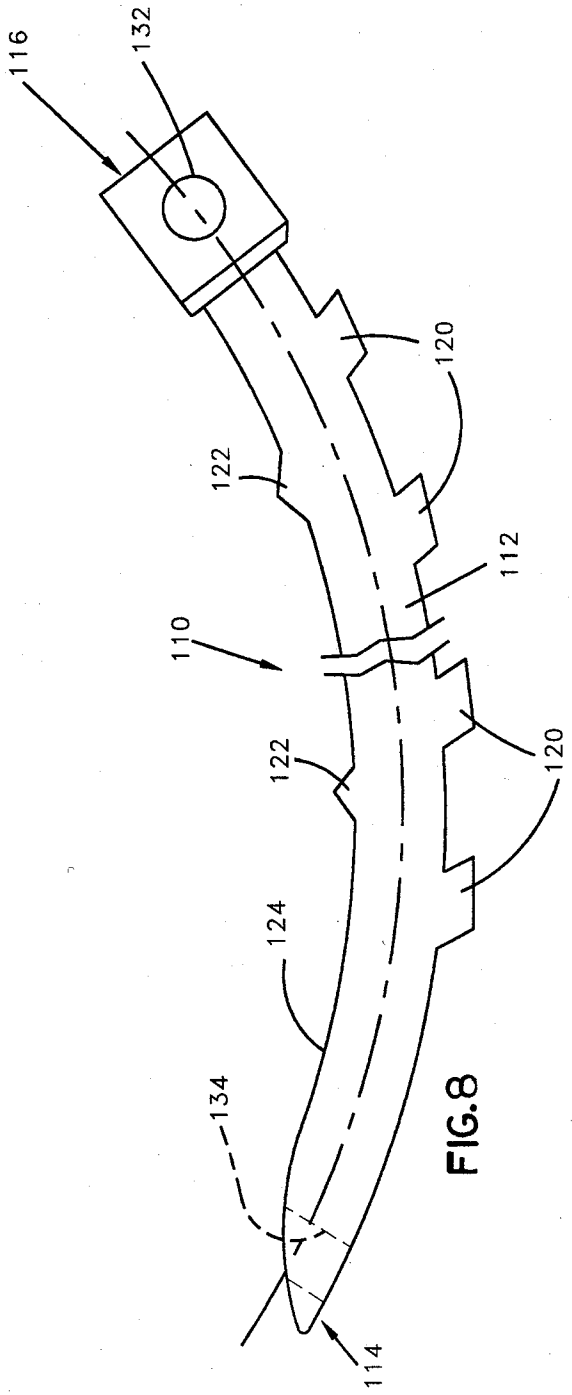
116
132
120
122
112
110
122
120
124
134
114

FIG.8

APPARATUS AND METHOD FOR SECURING BONE GRAFT

BACKGROUND OF THE INVENTION

The present invention relates to securing bone graft between a pair of bone portions, and in particular, relates to a fastener for securing bone graft between a pair of bone portions.

It is known that bone graft contracts as it resorbs. This characteristic of bone graft has resulted in difficulties in securing bone graft between spaced apart bone portions which are to be connected by the bone graft. Typically, staples are used to secure bone graft between bone portions. As the bone graft resorbs, it applies a force to a leg of the staple. The force acts through a moment arm and causes the leg to pivot relative to a portion of the staple base. This causes the staple to loose its effectiveness.

SUMMARY OF THE PRESENT INVENTION

The present invention is directed to a fastener for securing bone graft between a pair of bone portion. The fastener embodying the present invention comprises a curved elongated member having a shank for extending into the bone graft and the pair of bone portions to secure the bone graft and pair of bone portions together. The shank extends through the bone graft in a direction along a line extending through the bone graft and bone portions and along which the bone graft resorbs. Thus, the force applied to the shank by the bone graft as it resorbs acts generally along the longitudinal extent of the shank. Thus, the force does not act through a moment arm nor does it have a detrimental effect on the fastener.

The shank has an end portion for receiving force for driving the shank into the pair of bone portions and the bone graft. Since the shank is curved, it may be driven into one bone portion through a surface thereof which may extend transversely relative to a surface of the bone graft through which the shank will extend. As it progresses through the bone portion it moves in a curved path into the bone graft and then into the other bone portion. The shank has barbs extending therefrom to resist movement of the shank relative to the bone graft and the bone portions once it has been driven into place.

The shank also has an opening extending through the end portion for receiving a member such as a wire. Thus, it is possible to secure the bone graft and bone portions with two fasteners one of which is driven into the bone portions and bone graft in one direction and the other of which is driven into the bone portions and bone graft in the opposite direction. The wire can interconnect the opposite end portion of the respective fasteners and assist in retaining the fasteners in position. Specifically, if one of the fasteners tends to move out of the bone portions in a direction, opposite the direction in which it was driven, it would be resisted by the other fastener which would have to move in the same direction it was driven and further into the bone portions.

DESCRIPTION OF THE DRAWINGS

Further features and advantages of the present invention will be apparent to those skilled in the art to which it relates from reading the following detailed description of a preferred embodiment thereof with reference to the accompanying drawings, in which:

FIG. **1** is a side elevational view of a fastener embodying the present invention;

FIG. **2** is a top plan view of the fastener of FIG. **1** looking at the fastener in the direction of line **2—2**;

FIG. **3** is a bottom plan view of the fastener of FIG. **1** looking at the fastener in FIG. **1** in the direction of the arrow **3—3** in FIG. **1**;

FIG. **4** is a view illustrating fasteners embodying the present invention interconnecting a bone graft between a pair of bone portions;

FIG. **5** is a side view of the fasteners securing the bone graft between the bone portions;

FIG. **6** is a side view of the fasteners securing the bone graft between other bone portions;

FIG. **7** is a schematic view of a tool used for holding and driving the fastener of the present invention;

FIG. **8** is a side elevational view of a fastener of another embodiment of the present invention; and

FIG. **9** is a top plan view of the fastener of FIG. **8** looking at the fastener in the direction of line **9—9**.

DESCRIPTION OF A PREFERRED EMBODIMENT

It is well known that bone graft when located between a pair of bone portions contracts as it resorbs. This creates problems in securing the bone graft in position between the bone portions. A variety of different techniques have been utilized to secure bone graft between bone portions. The present invention is directed to a simple yet extremely effective fastener for securing bone graft in position between a pair of bone portions to be interconnected by the bone graft.

An elongated curved fastener **10** embodying the present invention is illustrated in FIGS. **1–3**. The fastener **10** includes a shank portion **12**. The shank portion **12** has a pointed end **14** and at its opposite end has a driving head portion **16**. A plurality of barbs **20** are spaced along the shank portion **12** and project therefrom.

The fastener **10** is preferably made from a metal material which is compatible with human tissue. Such a metal material may be titanium or surgical grade stainless steel.

The pointed end **14** of the fastener **10** is placed in contact with a surface **22*a*** of a bone portion **22** (FIG. **5**). The fastener **10** is driven into the bone portion **22**. As the fastener **10** is driven into the bone portion, due to its curved configuration, it progresses along a curved path A through the bone graft **24** and into bone portion **26**. The part of the shank portion **12** which extends through the bone graft **24** lies along a line B which extends generally in the direction in which the bone graft resorbs. Thus, the bone graft **24**, as it resorbs, applies a force on the shank portion **12** which acts generally along the path A of the shank portion **12**.

Each of the barbs **20** on the shank portion **12** have a width W (FIG. **2**) which progressively increases as the barbs **20** extend in a direction along the path A opposite the direction in which the fastener is driven. Thus, the fastener **10** appears to be tapered, as viewed in FIGS. **2** and **3**, from its end portion **14** and increases in width to the end portion **16** of the shank portion **12**. Also, the barbs **20** have surfaces **25** which are inclined rearwardly. The surfaces **25** extend in a direction forming an acute angle with the path A along which the fastener is driven. The surfaces **25** are inclined to resist withdrawal of the fastener **10** from the bone portions **22, 36** and the bone graft **24** in a direction opposite the path A along which the fastener is driven.

The end **16** of the shank portion of the fastener includes a pair of opposite V-shaped grooves **30, 32**. The grooves **30, 32** are adapted to receive gripping jaws **40, 42** respectively, of a driving tool **38** (FIG. 7). The tool **38** holds and drives the fastener **10** into the bone portions **22, 26** and bone graft **24**. The tool **38** includes the gripping jaws **40, 42**, which are pivotally attached at pivot **44**. A ratchet locking mechanism **46** locks the jaws **40, 42** in the grooves **30, 32**. The fastener **10** is thus gripped in the jaws **40, 42**. The driving tool **43** further includes a surface **48** which may be struck with a hammer to drive the fastener **10** into the bone portions **22, 26** and the bone graft **24**.

The manner and the various locations in the body in which a fastener embodying the present invention may be utilized are numerous. FIGS. **4** and **5** show one specific arrangement in which a pair of fasteners **50, 52** embodying the present invention are driven into bone portions **22, 26** and bone graft **24** located therebetween. The procedure of which is described below.

The fastener **50** is inserted between the fibrocartilaginous disk **60*b*** and surface **22*a*** of bone portion **22**. The pointed end portion **62** of the fastener **50** is driven through the surface **22*a*** of the bone portion **22** by a driving force transmitted through a suitable tool, such as the driving tool **38** (FIG. 7). The pointed end portion **62** of the fastener **50** is driven through the bone portion **22** and exits the bone portion through surface **22*b***. The surface **22*b*** of the bone portion extends in substantially the same direction as surface **22*a***. The pointed end portion **62** of the fastener **50** is then driven through the entire thickness of the bone graft **24** and into the bone portion **26** through surface **26*b***. The pointed end portion **62** of the fastener **50** is stopped within the bone portion **26**. The barbs **64** of the fastener **50** resist movement of the fastener in a direction along the path A opposite to the direction in which the fastener was driven.

The end portion **66** of the fastener **52** is similarly driven in a direction opposite the direction in which fastener **50** was driven. The fastener **52** is spaced laterally from fastener **50** in the bone portions and extends completely through the bone portion **26** between surfaces **26*a*** and **26*b*** and the bone graft **24**. The end portion **66** of the fastener **52** is stopped within the bone portion **22**. The barbs **68** of the fastener **52** resist movement in a direction opposite the direction in which the fastener **52** was driven.

After the fasteners **50, 52** have been driven into the bone portions **22, 26** and the bone graft **24** a wire cable **70** is placed through openings **71** in the driving ends of the respective fasteners **50, 52**. The wire cable **70** is made from a material compatible with human tissue, such as braided surgical grade stainless steel fibers. The ends **70*a*, 70*b*** of wire cable **70** are secured together by a suitable connector **72**.

The connector **72** is made of a material which can be deformed or crimped to frictionally engage the ends **70*a*, 70*b*** of the wire cable **70** and maintain the ends of the wire cable **70** in a desired position relative to one another. The connector **72** has a portion **74** which is split extending longitudinally of the length of the connector. The ends **70*a*, 70*b*** are placed within the split portion **74** in the desired relative position. The connector is then deformed or crimped by a suitable tool to maintain the wire cable in a desired tension.

The fastener **50** is driven into the bone portions **22, 26** and bone graft **24** in the direction A. The fastener **52** is driven into the bone portions **22, 26** and the bone graft **24** in the direction A'. If the fastener **50** tends to withdraw from the bone portions **22, 26** and bone graft **24** in a direction opposite the direction in which it was driven, it would tend to pull the fastener **52** further into the bone portions **22, 26** due to the wire cable **70** which innerconnects the ends of the fasteners **50, 52**. This obviously would occur also if the fastener **52** tended to withdraw from the bone portions **22, 26** and bone graft **24**. The withdrawal of fastener **52** would be resisted by the fastener **50** and the wire cable **70** which innerconnects the fasteners. Thus, this attachment of the bone portions **22, 26** and the bone graft **24** is made extremely reliable.

Further it should be apparent that the fasteners **10** also have an opening **80** at the end **12** thereof. As a result, a wire can be inserted between the opposite ends of the fastener. Further, if desired the fastener can be used with a tapered locking pin **82** in addition to the wire cable or the tapered locking pin may be used alone to lock the fastener **10** in position. Such an embodiment is illustrated in FIG. **6**.

Also shown in FIG. **6** is a modified type of mounting of the fasteners. In this alternative embodiment, the fasteners **90, 92** secure the bone graft **94** between bone portions **100, 102**. The fastener **90** extends through the bone portion **100** between surfaces **100*a*, 100*b*** of the bone portion. The surfaces **100*a*, 100*b*** of the bone portion **100** are disposed adjacent one another and extend transversely relative to one another. The fastener **92** extends through the bone portion **102** between the surfaces **102*a*, 102*b***. The surfaces **102*a*, 102*b*** of the bone portion **102** are disposed adjacent one another and extend transversely relative to one another.

A fastener **110** made in accordance with a second embodiment of the present invention is illustrated in FIGS. **8** and **9**. The fastener **110** is an elongate curved member having a rectangular cross section. The fastener **110** includes a shank portion **112**. The shank portion **112** has a pointed leading end portion **114** and an end portion **116**. The end portion **116** receives a driving force to drive the fastener **110** into a bone portion. The fastener **110** is preferably made of a metal which is compatible with human tissue. Such a metal material may be titanium or surgical grade stainless steel.

A plurality of barbs **120** extend away from a convex surface **118** of the shank portion **112** of the fastener **110**. The barbs **120** are shaped to permit the fastener **110** to be easily driven into a bone portion. The shape of the barbs **120** also aids in resisting movement of the fastener **110** outwardly from the bone portion in a direction opposite to the direction in which it was driven.

A plurality of ridges **122** are disposed along the concave surface **124** of the fastener **110**. Each of the ridges **122** extend transversely to the longitudinal axis of the shank portion **112**. The ridges **122** further aid in preventing the fastener **110** from moving relative to a bone portion. The ridges **122** extend a lesser distance away from the shank portion **112** than the barbs **120** extend.

The fastener **110** includes an opening **132** for receiving a wire therethrough to connect a pair of fasteners together, as described above. The fastener **110** also includes a second opening **134** extending through the pointed end portion **114**. The opening **34** may receive a tapered pin, as described above, for further securing the fastener **110** from movement relative to a bone portion.

It should be apparent that certain modifications, changes and adaptations may be made in the present

invention and it is intended to cover all such changes, modifications and adaptations which come within the scope of the appended claims.

Having described my invention, I claim:

1. A fastener for securing bone graft between a pair of bone portions, said fastener comprising:

an elongate curved member having a shank for extending into the bone graft and pair of bone portions:

said shank being a single projection with a longitudinal central axis and having a constant curvature along said longitudinal axis;

said shank having a concave surface, a convex surface and an end portion for receiving a force to drive said shank in a direction into the bone graft and pair of bone portions, said end portion being located along the longitudinal central axis of said shank; and

a plurality of barbs extending from said shank and spaced along said convex surface of said shank for engaging the bone graft and pair of bone portions to resist removal of said shank from the bone graft and the pair of bone portions.

2. The fastener set forth in claim **1** wherein each of said plurality of barbs has a lesser transverse width than a preceding barb along said shank with the widest barb located adjacent said end portion for receiving a force to drive said shank.

3. The fastener set forth in claim **1** further including a plurality of transversely extending ridges spaces along said concave surface of said shank.

4. A method comprising the steps of:

placing bone graft between first and second bone portions;

providing a pair of fasteners, each of said fasteners having an elongate curved shank; said shank being a single projection with a longitudinal central axis and having a constant curvature along said longitudinal axis; and an end portion for receiving a driving force to drive the shank into the bone graft and pair of bone portions;

driving a first one of the fasteners into the first bone portion, the bone graft and then the second bone portion and driving a second one of the fasteners into the second bone portion, the bone graft and then into the first bone portion; and

interconnecting the fasteners by wiring together end portions of the fasteners projecting from the bone portions.

5. An apparatus for securing bone graft between a pair of bone portions in which the bone graft contracts as it resorbs in at least one direction along a line extending between the bone portions, said apparatus comprising:

an elongate curved member having a shank for extending into the bone graft and bone portions, said shank being a single projection with a longitudinal central axis and having a constant curvature along said longitudinal axis;

an end portion on said shank for receiving a tool adapted to grip said shank and to transmit a force to drive said shank into one of the pair of bone portions, the bone graft and then the other one of the pair of bone portions; and

a plurality of barbs extending from said shank in a direction allowing relative movement of one of the bone portions toward the other of the bone portions in a direction along the line extending between the bone portions as the bone graft contracts and for resisting relative movement of one of the bone portions away from the other of the bone portions in a direction along the line extending between the bone portions.

6. An apparatus for securing bone graft between a pair of bone portions, said apparatus comprising:

a pair of fasteners, each of said pair of fasteners including an elongate curved member having a shank for extending into the bone portions and the bone graft in a direction toward the other fastener, said shank being a single projection with a longitudinal central axis and having a constant curvature along said longitudinal axis; each of said pair of fasteners having a plurality of barbs extending from said shank to resist removal of said shank from the bone portions and the bone graft; and

means for interconnecting said pair of fasteners to transmit a force between said pair of fasteners when one of said pair of fasteners moves in a direction tending to remove itself from the bone portions and the bone graft to thereby force the other of said pair of fasteners further into the bone portions and the bone graft.

7. The apparatus set forth in claim **6** further including an end portion on each of said pair of fasteners for extending from a respective one of the bone portions and an opening through said end portion and wherein said means for interconnecting said pair of fasteners comprises a connector having opposite end portions receivable in said respective openings in said end portion of each of said pair of fasteners.

8. The apparatus set forth in claim **7** wherein said connector comprises a wire cable extending between said end portions on each of said pair of fasteners.

* * * * *