US 20050085913A1

(19) United States

(12) Patent Application Publication

(10) Pub. No.: US 2005/0085913 A1

(43) Pub. Date: Apr. 21, 2005

Fraser et al.

(54) SPINAL FIXATION PLATE

(76) Inventors: **Robert Fraser**, Adelaide (AU); **John D. Malone**, Franklin, MA (US); **Hassan A. Serhan**, South Easton, MA (US); **Richard C. Techiera**, North Dartmouth, MA (US)

Correspondence Address:
NUTTER MCCLENNEN & FISH LLP
WORLD TRADE CENTER WEST
155 SEAPORT BOULEVARD
BOSTON, MA 02210-2604 (US)

(21) Appl. No.: 10/927,778

(22) Filed: Aug. 27, 2004

Related U.S. Application Data

(63) Continuation-in-part of application No. 10/403,930, filed on Mar. 31, 2003.

Publication Classification

(51) Int. Cl.[7] A61F 2/44

(52) U.S. Cl. 623/17.11; 623/17.16; 606/61

(57) ABSTRACT

Spinal fixation plates for maintaining adjacent vertebrae in and fixed position are provided. In an exemplary embodiment, the plate includes opposed superior and inferior portions that are angled in a direction anterior to an anterior face of a mid-portion of the plate. The plate also includes a curvature formed therein about a longitudinal axis in a sagittal plane thereof. In use, when the plate is attached to adjacent vertebrae, the angle of the superior and inferior portions and the curvature in the plate are effective to position one or more thru-bores formed in the superior and inferior portions at the anterior rims of the adjacent vertebrae. In another embodiment, a spinal fixation plate is provided that is adapted to engage and mate to a fusion cage or other vertebral implant disposed between adjacent vertebra. The present invention also provides spinal fixation kits or assemblies, and methods for implanting the same.

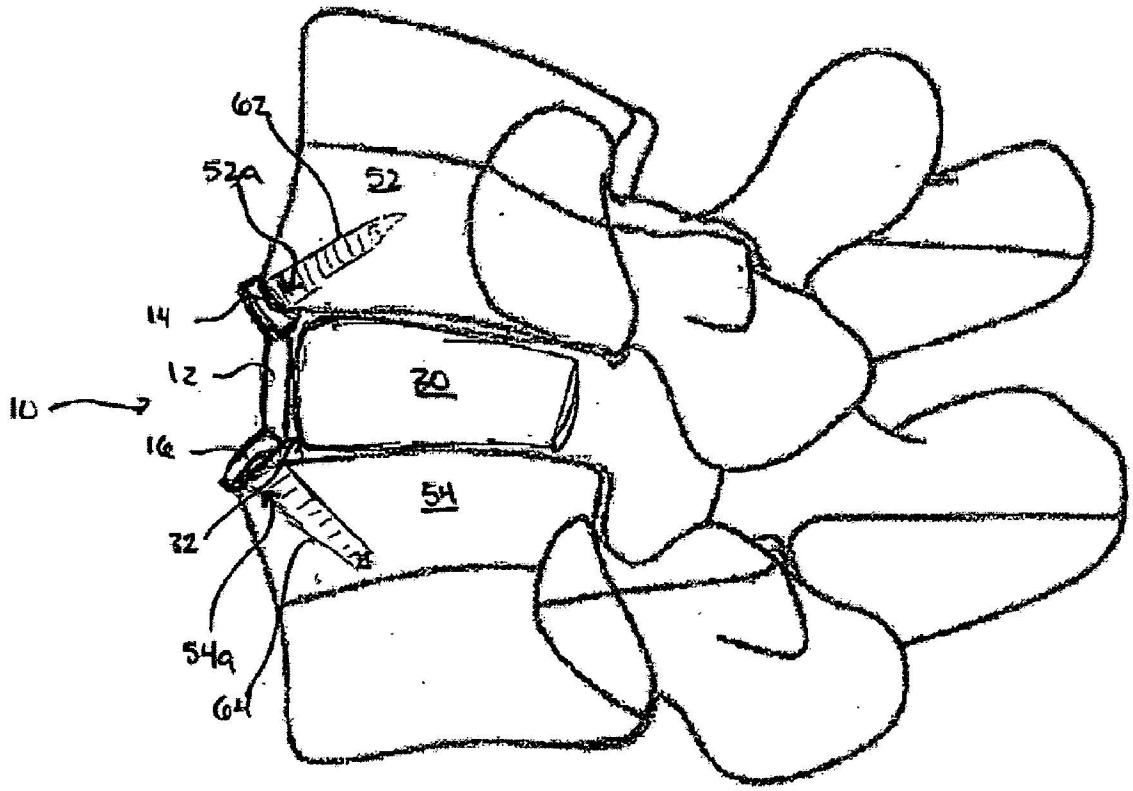

GLOBUS EX. 1008

FIG. 1A

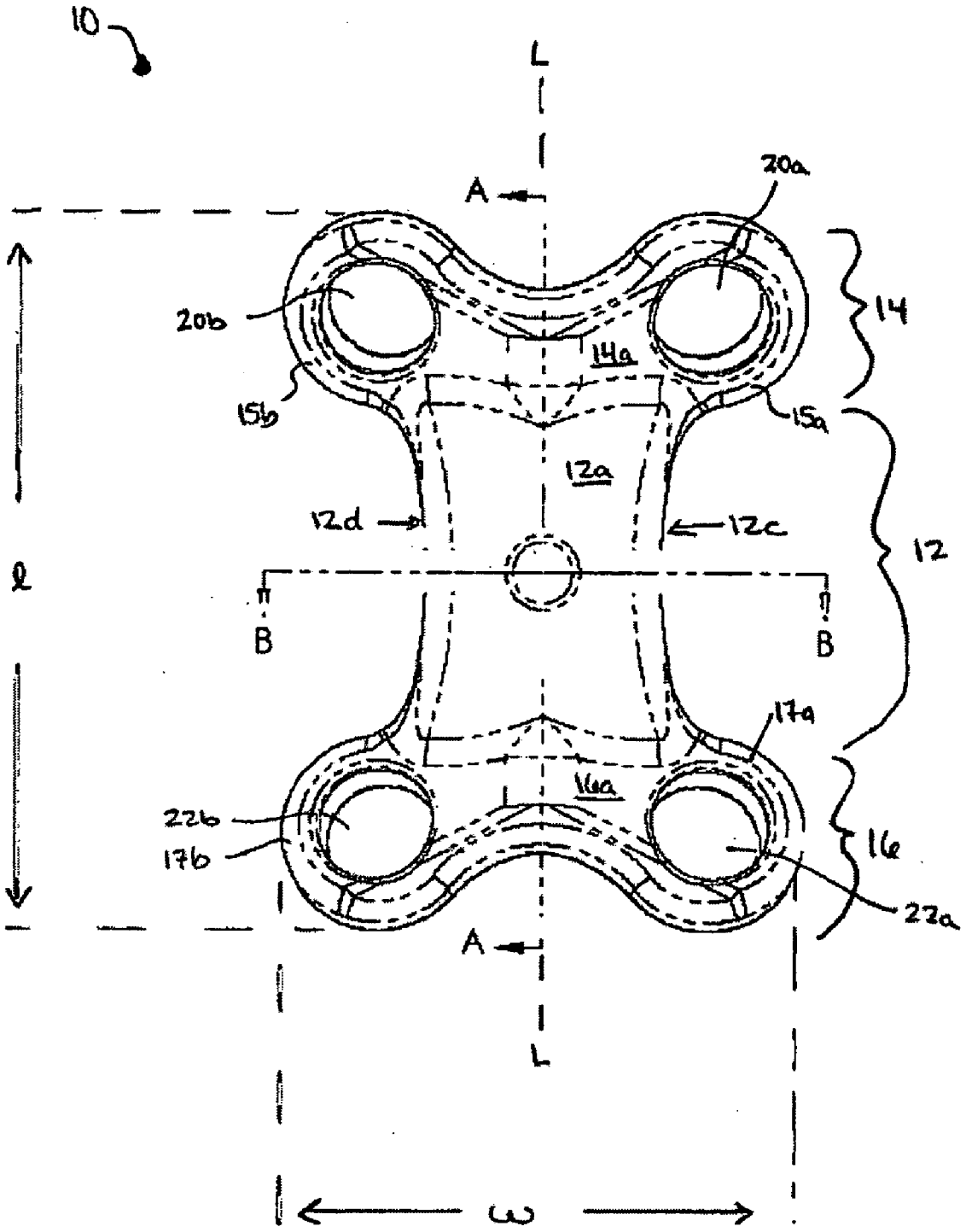
10
L
A
20a
20b
14
14a
15b
15a
12a
12d
12c
12
ℓ
B
B
17a
16a
22b
17b
16
22a
A
L
ω

FIG. 1B

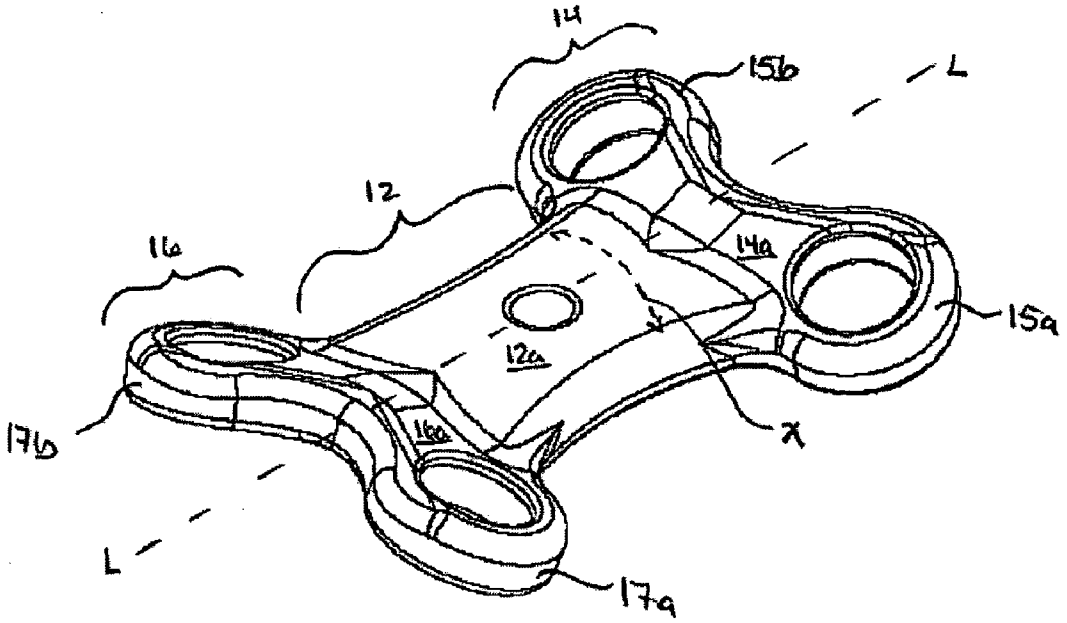
14
15b
L
12
16
14a
15a
12a
17b
16a
X
L
17a

FIG. 1C

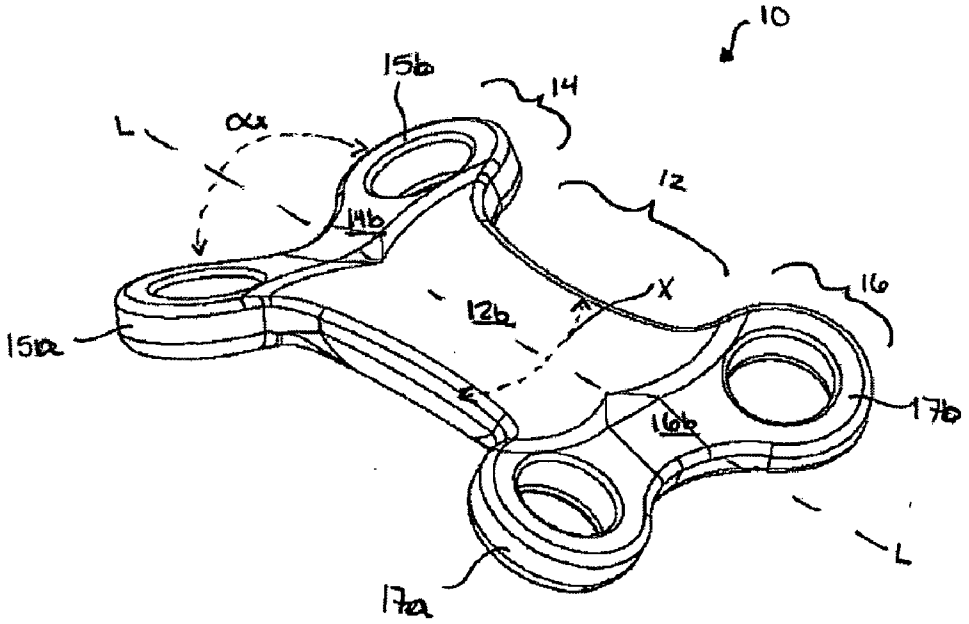
10
15b
14
L
α
12
14b
X
16
12b
15a
17b
16b
L
17a

FIG. 2A

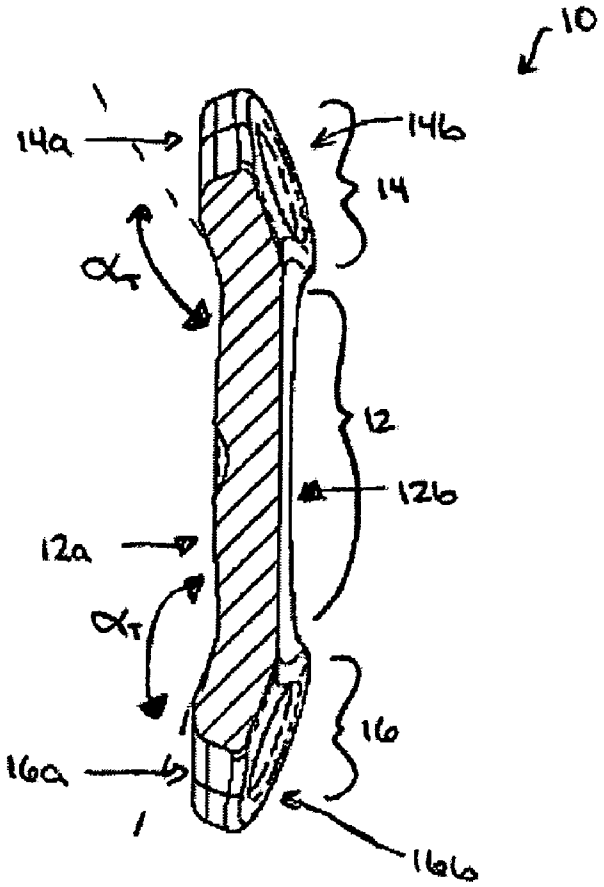

SECTION A-A

FIG. 2B

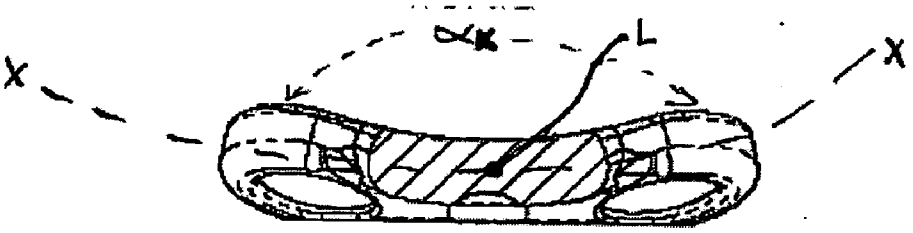

SECTION B-B

FIG. 2C

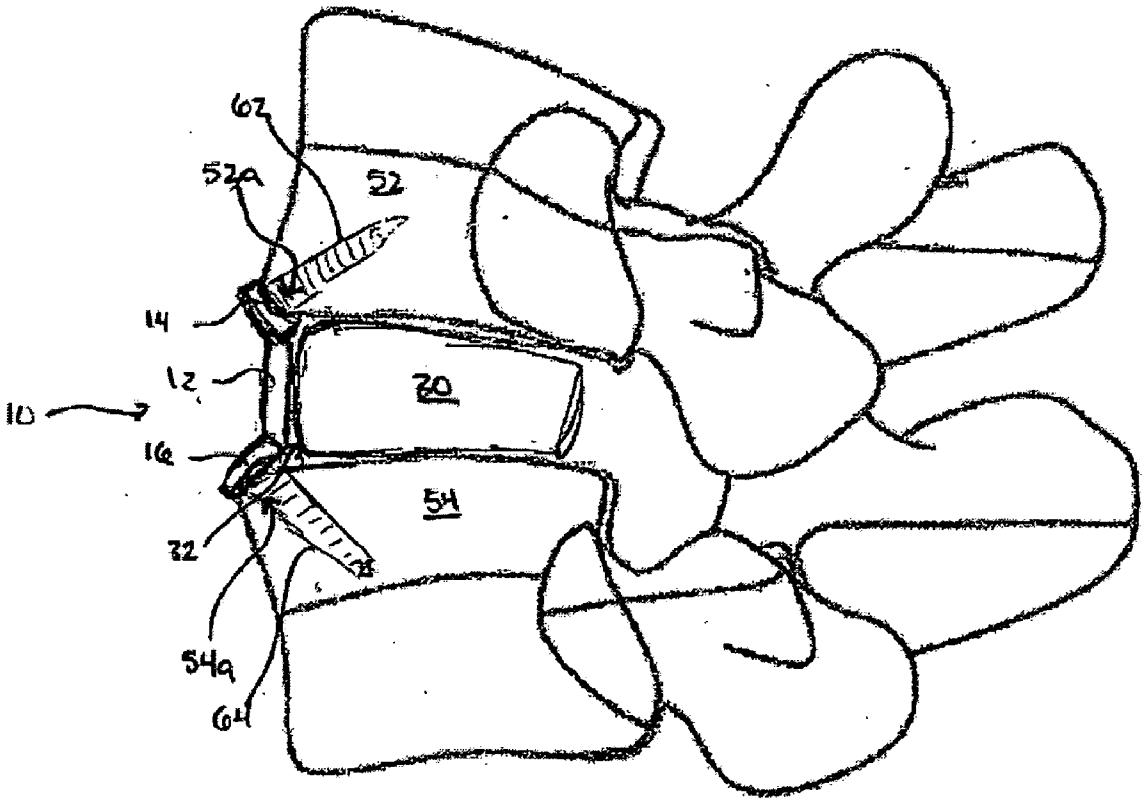

FIG. 3A

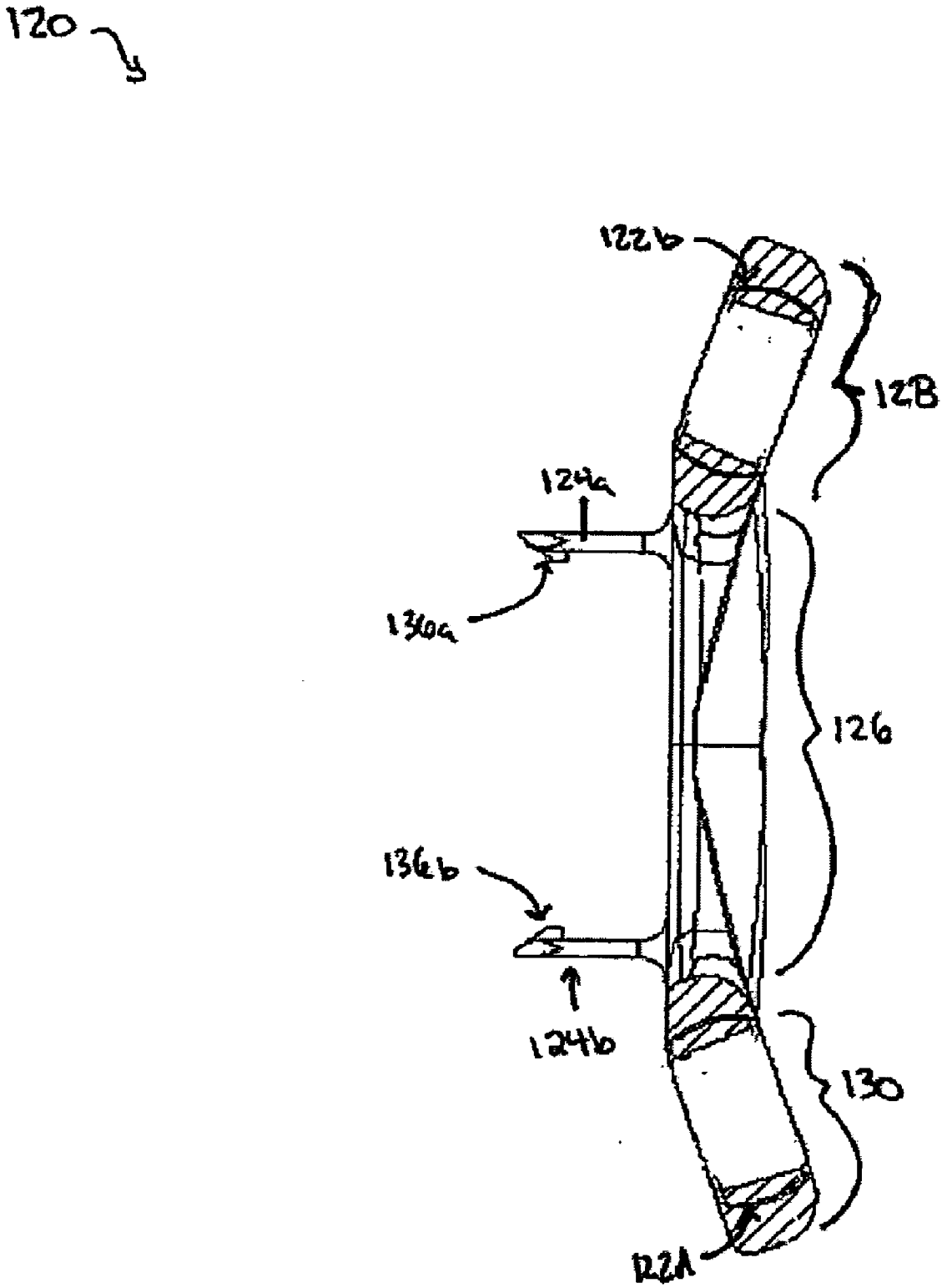

FIG. 3B

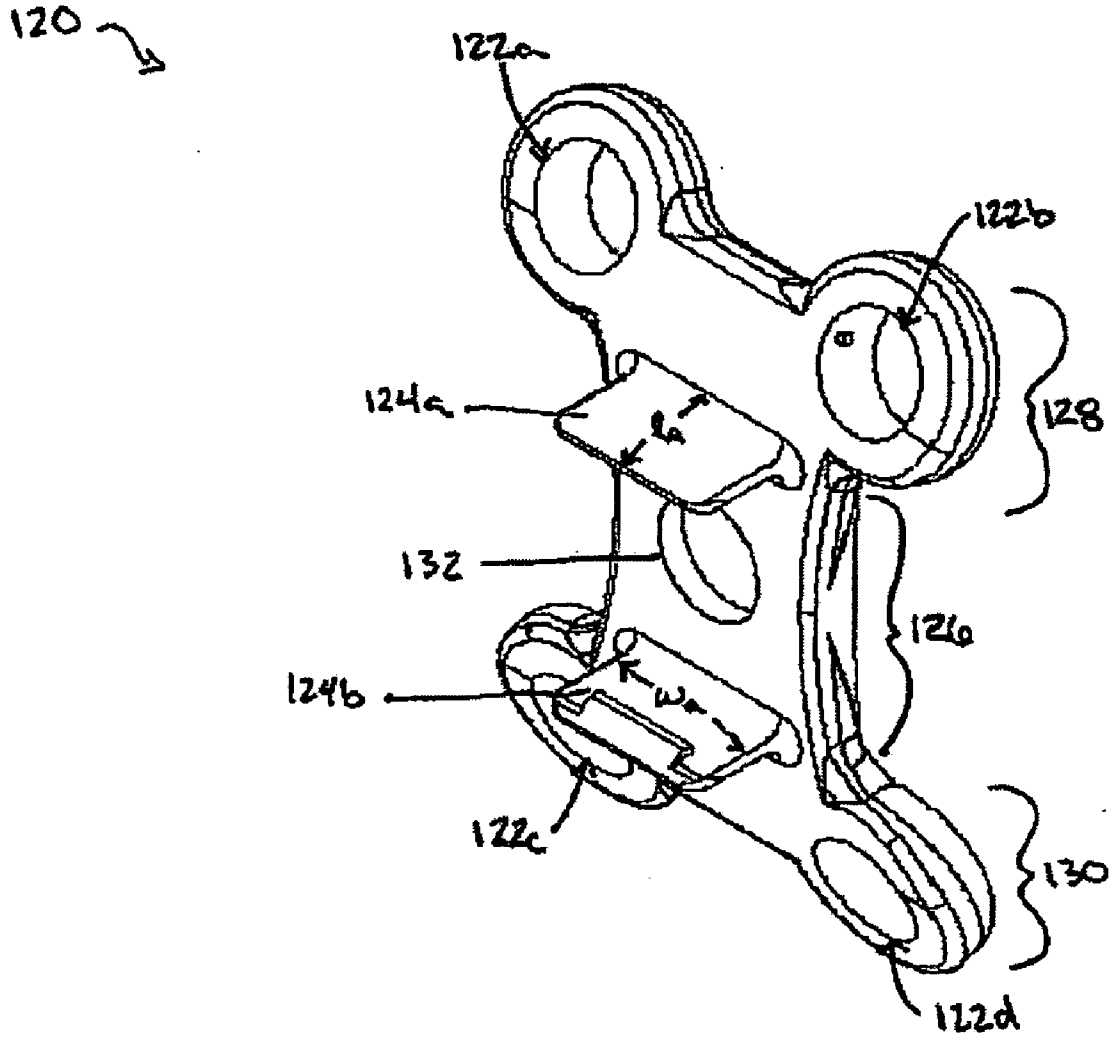

FIG. 4A

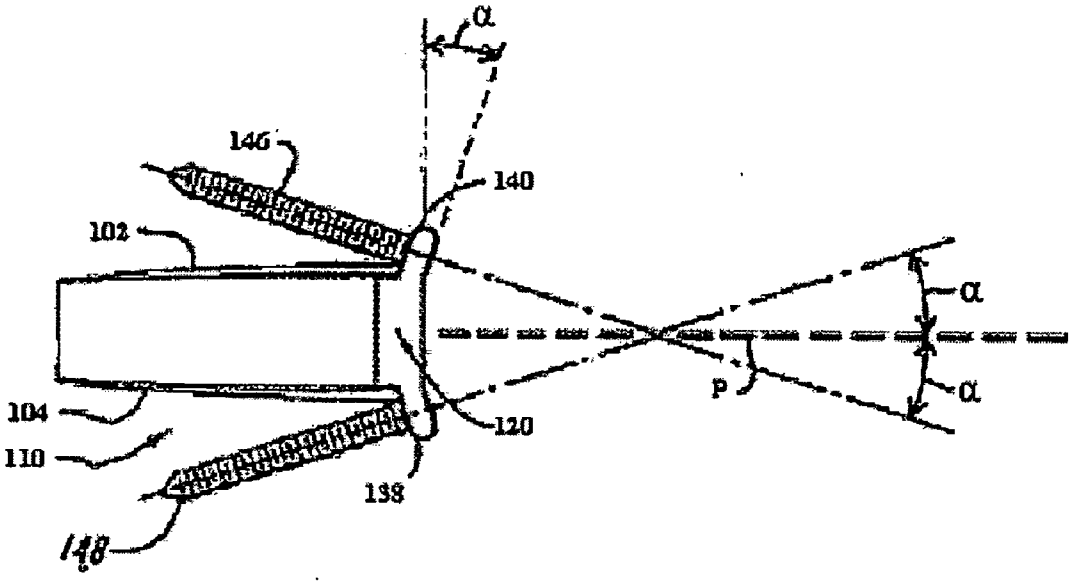
α
146
140
102
α
104
110
120
P
α
138
148

FIG. 4B

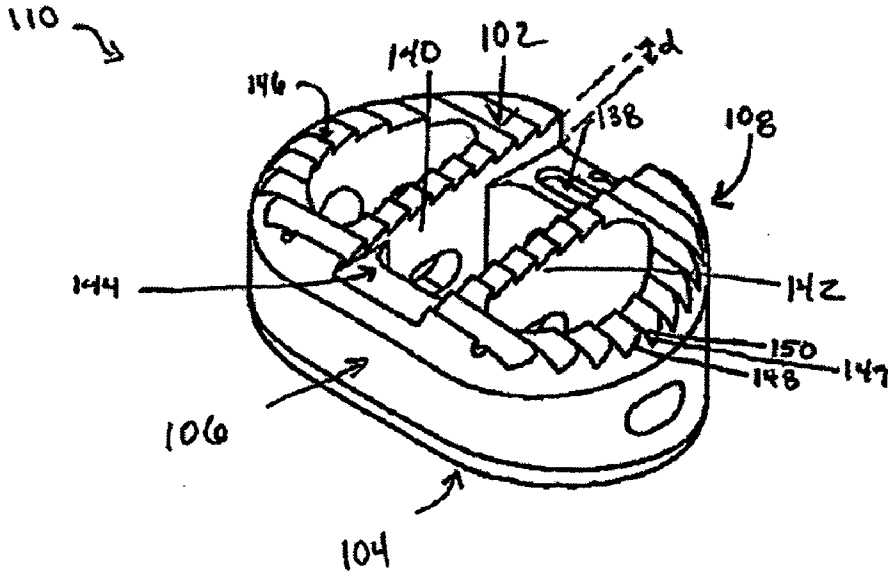
110
140
102
146
138
108
144
142
150
148
147
106
104

FIG. 5

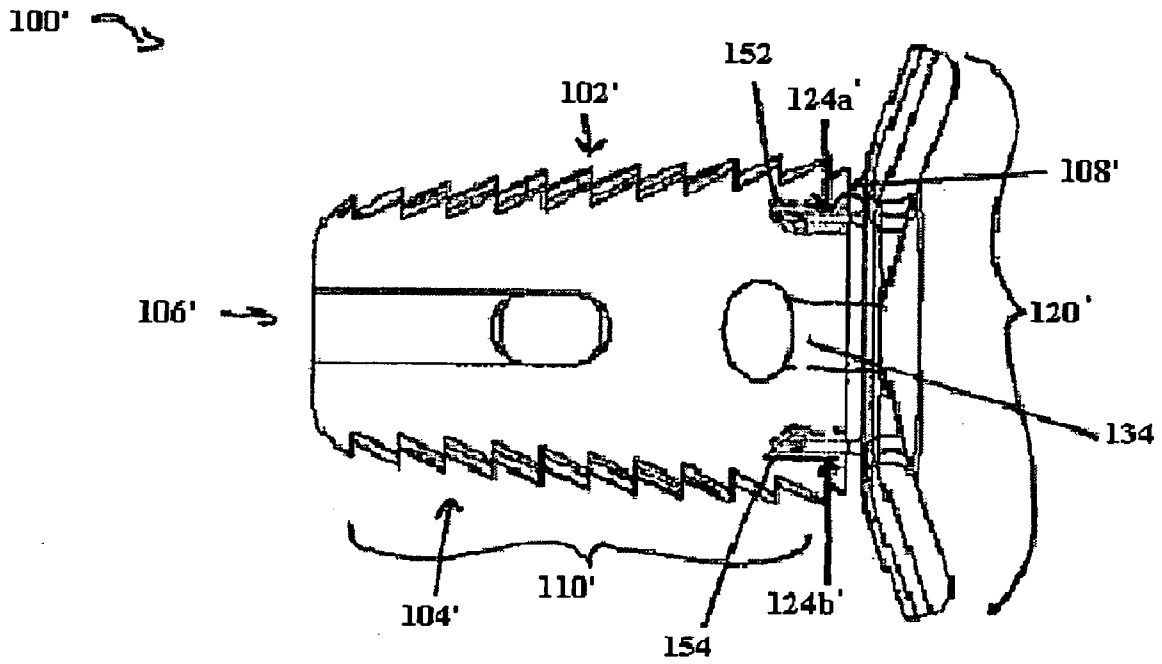

FIG. 6

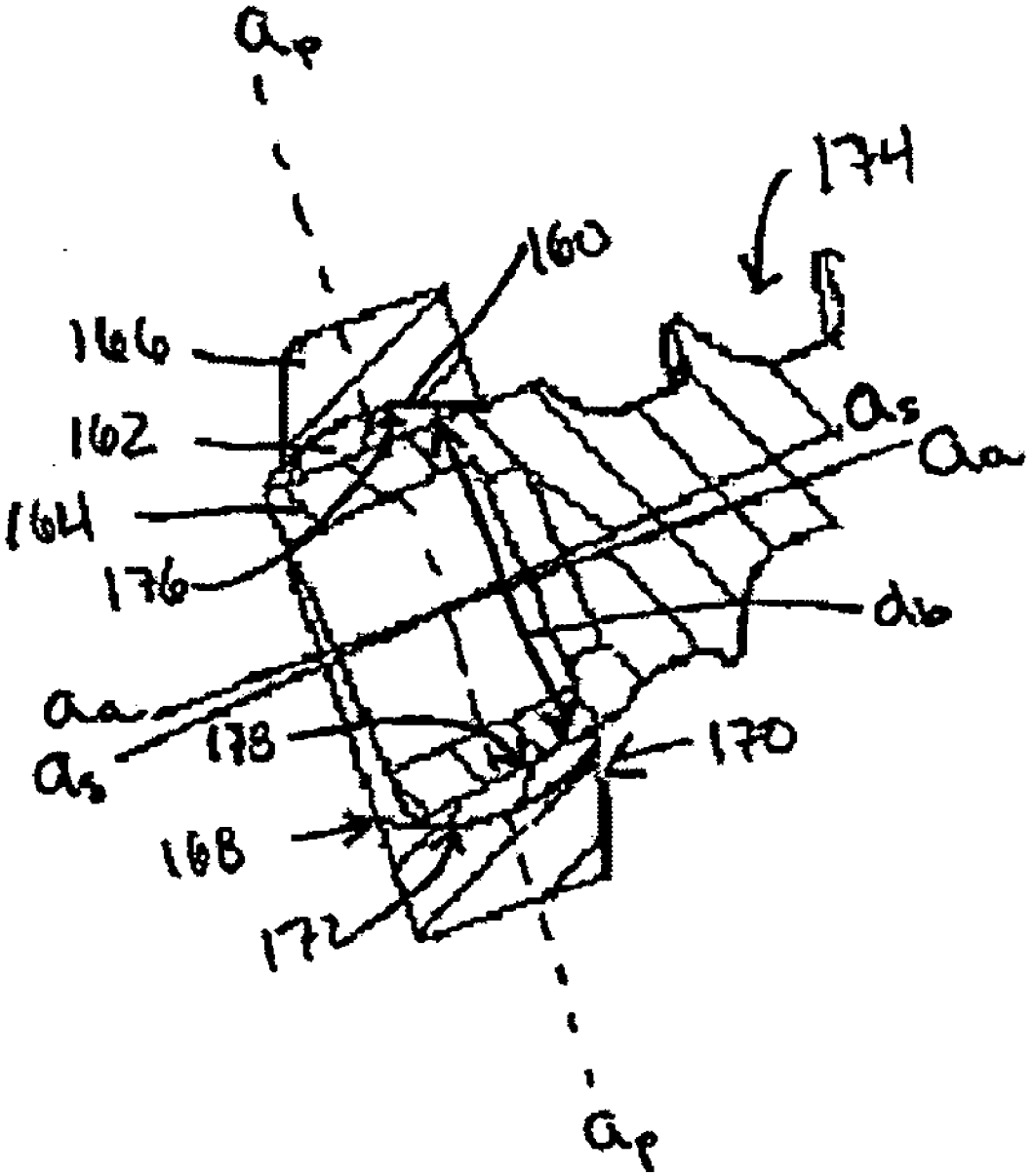

FIG. 7

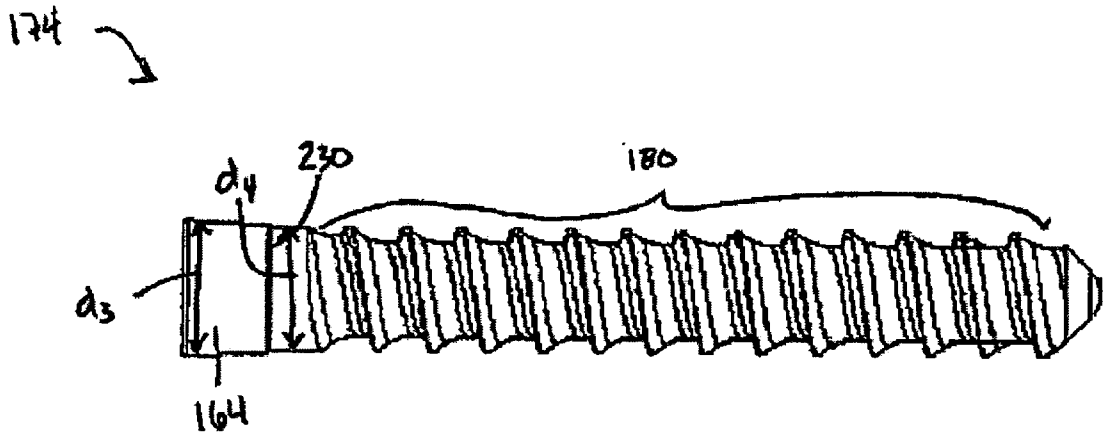

FIG. 8

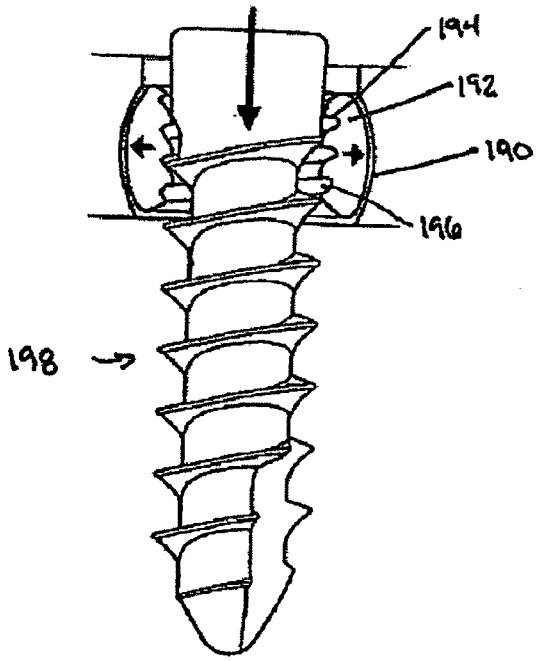

FIG. 9

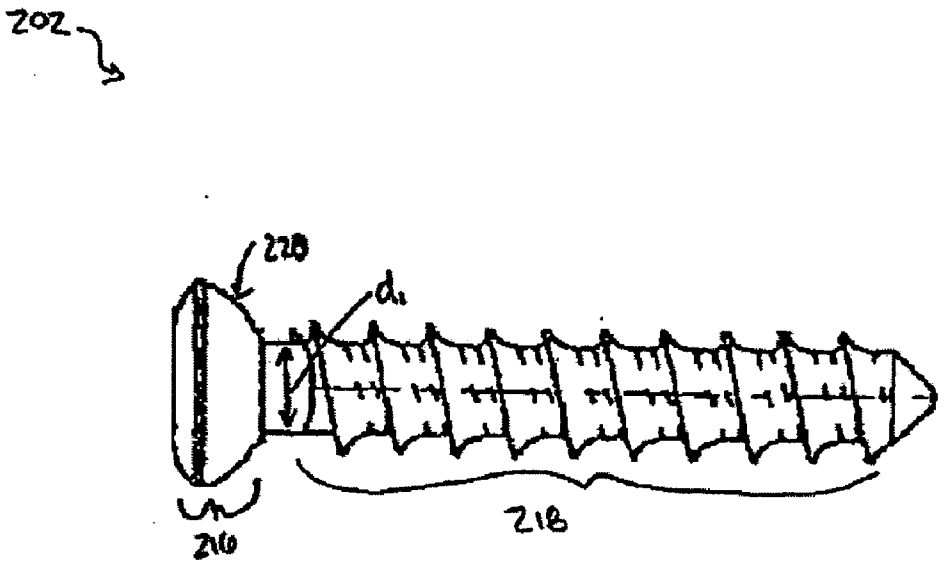

FIG. 10

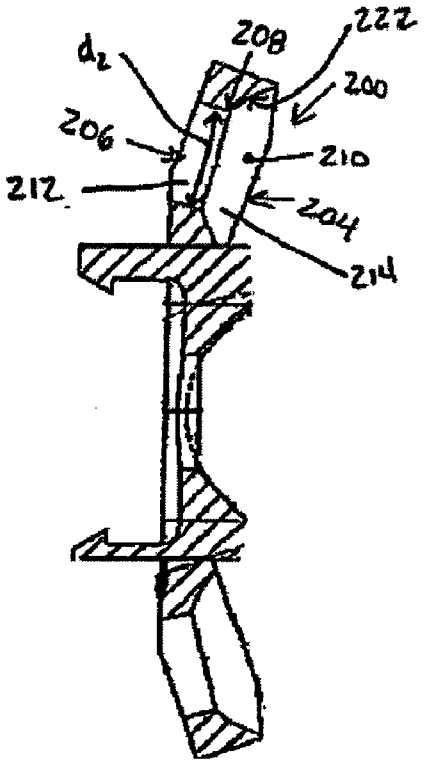

SPINAL FIXATION PLATE

CROSS-REFERENCE TO RELATED APPLICATIONS

[0001] This application is a continuation-in-part of U.S. patent application Ser. No. 10/403,930, filed on Mar. 31, 2003 and entitled "Anterior Lumbar Interbody Fusion Cage With Locking Plate," which is expressly incorporated herein by reference.

FIELD OF THE INVENTION

[0002] The present invention relates to medical devices, and more particularly to spinal fixation plates for promoting fusion of adjacent vertebral bodies.

BACKGROUND OF THE INVENTION

[0003] Advancing age, as well as injury, can lead to changes in the bones, disks, joints, and ligaments of the spine producing pain from nerve root compression. Under certain circumstances, alleviation of pain can be provided by performing a spinal fusion. This is a procedure that involves joining two or more adjacent vertebrae with a bone fixation device so at they no longer are able to move relative to each other. For a number of known reasons, bone fixation devices are useful for promoting proper healing of injured or damaged vertebral bone segments caused by trauma, tumor growth, or degenerative disc disease. The external fixation devices immobilize the injured bone segments to ensure the proper growth of new osseous tissue between the damaged segments. These types of external bone fixation devices often include internal bracing and instrumentation to stabilize the spinal column to facilitate the efficient healing of the damaged area without deformity or instability, while minimizing any immobilization and post-operative care of the patient.

[0004] One such device is a bone fixation plate that is used to immobilize adjacent skeletal parts such as bones. Typically, the fixation plate is a rigid metal or polymeric plate positioned to span bones or bone segments that require immobilization with respect to one another. The plate is fastened to the respective bones, usually with bone screws, so that the plate remains in contact with the bones and fixes them in a desired position. Bone plates can be useful in providing the mechanical support necessary to keep vertebral bodies in proper position and bridge a weakened or diseased area such as when a disc, vertebral body or fragment has been removed.

[0005] Such plates have been used to immobilize a variety of bones, including vertebral bodies of the spine. These bone plate systems usually include a rigid bone plate having a plurality of screw openings. The openings are either holes or slots to allow for freedom of screw movement. The bone plate is placed against the damaged vertebral bodies and bone screws are used to secure the bone plate to the spine and optionally to a prosthetic implant positioned between the adjacent vertebrae.

[0006] While several types of bone fixation plates exists, there remains a need for improved spinal fixation plates.

SUMMARY OF THE INVENTION

[0007] The present invention generally provides spinal fixation plates, spinal implants for use with spinal fixation plates, and methods for implanting the same. In one embodiment of the present invention, a spinal fixation plate is provided for maintaining adjacent vertebrae in a fixed position with respect to one another. The fixation plate includes a mid-portion with opposed superior and inferior portions. The superior and inferior portions can each include at least one thru-bore formed therein for receiving a fastening element, and the superior and inferior portions are preferably positioned at an angle with respect to the mid-portion such that, when the plate is positioned in relation to adjacent superior and inferior vertebrae, the superior and inferior portions of the plate are positioned adjacent to the anterior rim of each vertebra. In an exemplary embodiment, the superior and inferior portions are angled in a direction anterior to the anterior face of the mid-portion, and the angle is preferably less than about 15°.

[0008] In one exemplary embodiment, the plate can include a posterior curvature formed about a longitudinal axis. As a result, the plate can have a substantially concave posterior face, and the plate can also optionally have a substantially convex anterior face. In another embodiment, the superior and inferior portions of the plate preferably each include first and second thru-bore tabs formed on opposed sides of the longitudinal axis of the plate. When combined with the curvature in the plate, the first and second opposed tabs can be angled toward one another in a posterior direction. In an exemplary embodiment, the angle between a posterior face of the first thru-bore tab and a posterior face of the second thru-bore tab in each of the superior and inferior portions is in the range of about 150° to 180°, and more preferably the angle is about 160°.

[0009] In yet another embodiment of the present invention, a spinal fixation plate is provided having a mid-portion and opposed superior and inferior portions extending at an angle with respect to the mid-portion in a direction anterior to an anterior face of the mid-portion. The superior and inferior portions each preferably include first and second thru-bore tabs formed on opposed sides of a longitudinal axis of the plate. The first and second thru-bores tabs are preferably angled toward one another in a posterior direction. The first and second thru-bores tabs in the superior and inferior portions also preferably each include a thru-bore formed therein and adapted to receive a fastening element to mate the plate to adjacent vertebrae. The mid-portion can also optionally be curved about a longitudinal axis, preferably in a posterior direction, such that opposed side edges of the mid-portion are positioned posterior to a posterior face of the mid-portion at the longitudinal axis of the mid-portion. At least a portion of the plate can have a substantially concave posterior face as a result of the curve formed therein. At least a portion of the plate can also optionally have a substantially convex anterior face as a result of the curve formed therein.

[0010] The present invention also provides a spinal fixation kit that includes at least one fixation plate and an implant that is adapted to be disposed between adjacent vertebra and that has posterior, anterior, superior, and inferior faces. The fixation plate preferably has a mid-portion with opposed superior and inferior portions that define a plate length that is preferably greater than a height of the implant between the superior and inferior faces. The superior and inferior portions also preferably include first and second opposed thru-bore tabs that extend in a direction

anterior to an anterior face of the mid-portion of the fixation plate, and/or at extend at an angle toward one another in a posterior direction. The kit can also include at least one fastening element that is adapted to extend through a thru-bore tab in the superior and inferior portions of the fixation plate to mate the plate to adjacent vertebrae.

[0011] The present invention also provides methods for implanting a spinal fixation plate. In one exemplary embodiment, the method can include one or more of the following steps: distracting adjacent vertebrae, removing at least a portion of the disc disposed between the adjacent vertebrae, positioning a spinal implant between the adjacent vertebrae, and positioning a spinal fixation plate adjacent to an anterior face of the spinal implant such the opposed superior and inferior portions of the spinal fixation plate are positioned on the anterior rim of each vertebra. A fastening element can then be inserted through one or more of the thru-bore formed in the spinal fixation plate to attach the spinal fixation plate to the adjacent vertebrae. In an exemplary embodiment, the superior and inferior portions of the spinal fixation plate include longitudinally opposed thru-bores tabs, each having a thru-bore formed therein for receiving a fastening element. The opposed thru-bore tabs in the superior portion are preferably angled toward one another in a posterior direction, and the thru-bore tabs in the inferior portion are also preferably angled toward one another in a posterior direction. The superior and inferior portions of the plate can also be angled in a direction anterior to an anterior face of a mid-portion of the plate, such that the mid-portion of the plate is flush or sub-flush relative to an anterior face of the adjacent vertebrae.

[0012] In yet another embodiment of the present invention, a spinal fixation assembly is provided including a fusion cage with posterior, anterior, superior, and inferior faces, and a plate having at least one aperture for receiving a bone screw and being configuration to slidably mate to the fusion cage. In one embodiment, the plate includes a mating element for engaging the cage in an anterior-posterior direction. The mating element can have a variety of configurations, but it preferably takes the form of opposed first and second arms that are adapted to engage the superior and inferior faces of the fusion cage. The first and second arms can be flexible, and preferably extend from the plate and are adapted to seat on the superior and inferior faces of the fusion cage. The superior and inferior faces of the fusion cage can each include an arm-seating recess formed therein for receiving the first and second arms on the plate. These recesses allow the arms to sit flush with the superior and inferior faces when disposed within the arm-seating recesses. In an exemplary embodiment, the first and second arms are adapted to mate with the arm-receiving recesses formed on the fusion cage with an interference fit to temporarily secure the plate to the fusion cage.

[0013] In another embodiment, the anterior face of the fusion cage can include at least one bore formed therein, and the mating element can be at least one arm that is adapted to extend into the bore in the fusion cage to mate the plate to the fusion cage. In a preferred embodiment, the anterior face of the fusion cage includes a superior bore and an inferior bore formed therein, and the mating element comprises opposed first and second arms that are adapted to extend into the superior and inferior bores in the fusion cage to mate the plate to the fusion cage.

[0014] In another embodiment, the fusion cage includes an intermediate plane that separates the inferior face from the superior face to define an inferior side and a superior side, and the plate includes at least one inferior aperture on the inferior side of the fusion cage and at least one superior aperture on the superior side of the fusion cage. Each aperture in the plate can have a first end having an opening, a second, opposed end, and a sidewall extending therebetween that defines an inner lumen. The first end of each aperture preferably is a generally spherical recess formed in the plate for rotatably seating a head of a bone screw. A split bushing is preferably disposed within each aperture in the plate. Each aperture can optionally include an anti-rotation mechanism effective to prevent each split bushing from rotating within the aperture. The apertures and the split bushings can have a variety of configurations. In one embodiment, the sidewall of each aperture can be concave and each split bushing can include a convex outer surface. Each split bushing can also optionally include a shoulder formed therein that abuts a corresponding shoulder formed within each aperture. In another embodiment, each split bushing can include an inner surface having threads formed thereon that are adapted to mate with corresponding threads formed on a bone screw.

[0015] In other aspects, the inferior and superior apertures are disposed in inferior and superior portions. The portions, or tabs, are preferably angled with respect to the fusion cage in a direction anterior to the anterior face of the fusion cage. In an exemplary embodiment, each portion extends in a plane, and each aperture defines a central axis that extends through the aperture at an angle with respect to the plane of the portion in which the aperture is disposed.

BRIEF DESCRIPTION OF THE DRAWINGS

[0016] The invention will be more fully understood from the following detailed description taken in conjunction with the accompanying drawings, in which:

[0017] **FIG. 1A** illustrates an anterior view of one embodiment of a spinal fixation plate in accordance with the present invention;

[0018] **FIG. 1B** is an anterior perspective view of the fixation plate shown in **FIG. 1A**;

[0019] **FIG. 1C** is a posterior perspective view of the fixation plate shown in **FIG. 1A**;

[0020] **FIG. 2A** is a cross-sectional view of the fixation plate shown in **FIG. 1A** taken along line A-A;

[0021] **FIG. 2B** is a cross-sectional view of the fixation plate shown in **FIG. 1A** taken along line B-B;

[0022] **FIG. 2C** is a side view of a portion of a human spine having the fixation plate shown in **FIG. 1A** implanted therein;

[0023] **FIG. 3A** is side view of an embodiment of a spinal fixation plate that is adapted to mate to a fusion cage;

[0024] **FIG. 3B** is a posterior perspective view of the plate shown in **FIG. 3A**;

[0025] **FIG. 4A** is a side view of the plate shown in **FIGS. 3A and 3B** mated to one embodiment of a fusion cage to form a spinal fixation assembly;

[0026] **FIG. 4B** is a perspective view of the fusion cage shown in **FIG. 4A**;

[0027] **FIG. 5** is a side view of another embodiment of a spinal fixation assembly;

[0028] **FIG. 6** is a cut-away view of an aperture, split bushing, and bone screw according to another embodiment of the present invention;

[0029] **FIG. 7** is a side view of one embodiment of a bone screw according to the present invention;

[0030] **FIG. 8** is a cut-away view of another embodiment of an aperture, split bushing, and bone screw according to the present invention;

[0031] **FIG. 9** is a side view of another embodiment of a bone screw according to the present invention; and

[0032] **FIG. 10** is a cut-away, side view of a plate having apertures adapted to receive the bone screw shown in **FIG. 9**.

DETAILED DESCRIPTION OF THE DRAWINGS

[0033] In general, the present invention provides a spinal fixation plate having at least one aperture for receiving a bone screw. The plate is adapted to be attached to adjacent vertebrae to maintain the vertebrae in and fixed position and thereby provide biomechanical stability to the vertebra. The plate can be used in connection with a variety of spinal implants, including inner body fusion devices, fusion cages, bone grafts, artificial discs, or other vertebral implants, and it can optionally be adapted for use in both mating or non-mating relationships with the inner body fusion devices or other vertebral implant.

[0034] **FIGS. 1A-2B** illustrate one embodiment of spinal fixation plate **10**. In general, the plate **10** has a substantially elongate shape and it includes a mid-portion **12** that is positioned between superior and inferior portions **14**, **16**. Each portion **12**, **14**, **16** includes an anterior face **12***a*, **14***a*, **16***a* and a posterior face **12***b*, **14***b*, **16***b*, respectively, and the portions **12**, **14**, **16** together define a longitudinal axis L extending therealong. The mid-portion **12** of the plate **10** also includes opposed lateral sides **12***c*, **12***d* extending therealong between the superior and inferior portions **14**, **16**.

[0035] As indicated above, the superior and inferior portions **14**, **16** are adapted to mate to superior and inferior vertebrae, respectively, and the mid-portion **12** extends therebetween to maintain the vertebrae at a fixed position with respect to one another. Accordingly, the plate **10** preferably includes one or more apertures or thru-bores formed therein for receiving a fastening element, such as a bone screw, to attach the plate **10** to the adjacent vertebrae. In the illustrated exemplary embodiment, each portion **14**, **16** includes two thru-bores **20***a*, **20***b*, **22***a*, **22***b* formed therein. The thru-bores **20***a*, **20***b*, **22***a*, **22***b* are preferably formed on opposed sides of the longitudinal axis L of the plate **10** such that each of the superior and inferior portions **14**, **16** of the plate **10** include first and second opposed thru-bore tabs **15***a*, **15***b*, **17***a*, **17***b*. The thru-bores **20***a*, **20***b*, **22***a*, **22***b* can have a variety of configurations, and exemplary configurations will be discussed in more detail with respect to **FIGS. 6-10**.

[0036] The superior and inferior portions **14**, **16** of the plate **10** can also be adapted to position the thru-bores **20***a*, **20***b*, **22***a*, **22***b* at a particular location with respect to the adjacent vertebrae. In an exemplary embodiment, the superior and inferior portions **14**, **16** can be angled with respect to the mid-portion **12** and more particularly, as best shown in **FIG. 2A**, the superior and inferior portions **14**, **16** can extend in a direction that is anterior to the anterior face **12***a* of the mid-portion **12**. As a result, when the plate **10** is implanted, the superior and inferior portions **14**, **16** can be positioned on the anterior rim of each vertebra, which is a location that is between the anterior face and the endplate of each vertebra, e.g., along an edge of the vertebrae at the endplate/cortical junction. This location, which will be discussed in more detail with respect to **FIG. 2C**, is hereinafter referred to as the anterior rim of a vertebra. When the superior and inferior portions **14**, **16** are positioned against the anterior rims, the angle α also causes the mid-portion **12** to be substantially flush or sub-flush with respect to the anterior surface of each vertebra, thereby minimizing the anterior prominence of the plate **10**. The position also allows locking mechanisms, such as bone screws, to be inserted through the thru-bores **20***a*, **20***b*, **22***a*, **22***b*, through the anterior rims of the vertebrae, and into the vertebral bodies. The unique positioning of the plate **10** also reduces the need for excessive vessel retraction.

[0037] The angulation of the superior and inferior portions **14**, **16** can vary depending on the intended use, but in an exemplary embodiment the angle α_T between the anterior surface **14***a*, **16***a* of the superior and inferior portions **14**, **16** and the anterior surface **12***a* of the mid-portion **12** is less than about 15°, and more preferably the angle α_T is about 10°. A person having ordinary skill in the art will appreciate at the angle α_T can be greater than 15°.

[0038] The plate **10** can also or alternatively have a curve X, as best shown in **FIGS. 1B, 1C**, and 2B, that is formed about the longitudinal axis L in a sagittal plane, which extends in a superior-inferior direction and dissects the posterior and anterior faces **12***a*, **12***b*, **14***a*, **14***b*, **16***a*, **16***c* of the plate **10**. The curve X is preferably only formed about the longitudinal axis L that extends between the superior and inferior portions **14**, **16**. More particularly, the plate **10** can be curved such that the opposed edges **12***c*, **12***d* of the mid-portion **12** are substantially longitudinally straight, but they are positioned posterior to the posterior face **12***b* of the mid-portion **12**. As a result of the curve X, the posterior face **12***b*, **14***b*, **16***b* of each portion **12**, **14**, **16** can have a substantially concave shape about the longitudinal axis L. The anterior face **12***a*, **14***a*, **16***a* of each portion **12**, **14**, **16** can also optionally have a substantially convex shape about the longitudinal axis L to correspond to the posterior face **12***b*, **14***b*, **16***b*.

[0039] The curve X can also continue through the superior and inferior portions **14**, **16** of the plate **10**, such that the opposed edges **14***c*, **14***d*, **16***c*, **16***d* of the superior and inferiors portions **14**, **16** are positioned posterior to the posterior faces **14***b*, **16***b* thereof. As previously discussed, the superior and inferior portions **14**, **16** can also be angled in a direction anterior to the anterior faces **14***a*, **16***a* thereof. When the angle α_T and the curve X are combined, the opposed thru-bore tabs **15***a*, **15***b*, **17***a*, **17***b* are not only angled anterior to the anterior face **12***a* of the mid-portion **12** of the plate **10**, but they are also angled toward one another in a posterior direction. While the angle α_x, shown in **FIGS. 1C and 2B**, can vary, in an exemplary embodiment the angle

α_x between the thru-bore tabs **15***a*, **15***b*, **17***a*, **17***b* is in the range of about 150° to 180°, and more preferably the angle is about 160°. A person skilled in the art will appreciate that there were the angle α_x is 180°, the plate **10** will not have a curve X formed therein, but rather it will be substantially planar.

[**0040**] In use, the plate **10** can be implanted in the lumbar, cervical, or thoracic regions of the patient's spine, and thus the size of the plate **10** will vary depending on the intended use. The plate **10** can also be adapted for use in various surgical approaches, but preferably the plate **10** is adapted for anterior fixation. In an exemplary embodiment, the plate **10** has a length l and/or width w that is adapted for use in the lumbar region of a patient's spine. More preferably, the plate **10** has a length l that is less than a distance between the adjacent vertebrae to which the plate **10** is adapted to be mated to. This allows the superior and inferior portions **14**, **16** of the plate **10**, and in particular the thru-bore tabs **15***a*, **15***b*, **17***a*, **17***b*, to be positioned on the anterior rims of the adjacent vertebrae, as previously discussed above. A person skilled in the art will appreciate that the plate **10** can be adapted for a variety of other uses and the configuration of the plate **10** can vary depending on the intended use. Moreover, a variety of plates **10** having various sizes and configurations can be provided as part of a kit, allowing a surgeon to select the appropriate plate **10** based on the intended use.

[**0041**] By way of non-limiting example, **FIG. 2C** illustrates plate **10** implanted in a patient's spinal column. In particular, the plate **10** is shown mated to adjacent vertebrae **50**, **52** having an implant, e.g., fusion cage **30**, disposed therebetween. The adjacent vertebrae **52**, **54** are distracted, at least a portion of the disc is removed, and the area is prepared using techniques known in the art. Prior to inserting the fusion cage **30** between the adjacent vertebrae **52**, **54**, the fusion cage **30** can be filled with autograft, allograft bone, and/or demineralized bone matrix to promote fusion. The fusion cage **30** is then positioned between the vertebrae **52**, **54** using a variety of devices. Distractor and spreader devices are known in the art, and are effective for separating adjacent vertebrae, and optionally assisting with insertion of the implant. Typical distractors include two opposed blade members which are inserted between the adjacent vertebrae, and then opened to separate the vertebrae. The fusion cage **30** can then be inserted into the disc space either manually, or using an impacting device, such as a mallet.

[**0042**] Once the fusion cage is in position, the fixation plate **10**, and in particular the posterior surface **12***b* of the plate **10**, can be placed adjacent to the anterior face **32** of the fusion cage **30** to position the superior and inferior portions **14**, **16** of the plate **10** against the anterior rims **52***a*, **54***a* of the adjacent vertebrae **52**, **54**. Once positioned against the vertebrae, the plate **10** is preferably not fixedly attached to the fusion cage **30** such that the two components are in a non-mating relationship with one another. In other words, the plate **10** and the fusion cage **30** remain as separate components from one another. One or more bone screws (only two screws **62***a*, **64** are shown) can then be inserted through the thru-bores **20***a*, **20***b*, **22***a*, **22***b* in the superior and inferior portions **14**, **16** of the plate **10** to secure the plate **10** to the adjacent vertebrae **52**, **54**. A person skilled in the art will appreciate that various procedures and tools can be used to position the plate **10** against the adjacent vertebrae and to prepare the vertebrae for receiving the bone screws. The plate **10** can also optionally include various features to allow the plate **10** to be coupled to a tool for implanting the plate **10**.

[**0043**] **FIGS. 3A-3B** illustrate another embodiment of a spinal fixation plate **120**. In this embodiment, the plate **120** is adapted to mate to a vertebral implant, such as a fusion cage **110**, shown in **FIGS. 4A-4B**. **FIG. 4A** illustrates plate/cage assembly **100**. The plate **120** can have a generally planar shape and it includes a mid-portion **126** that is positioned between superior and inferior portions **128**, **130**. When the plate **120** is mated to the fusion cage **110**, the superior portion **128** of the plate **120** is adapted to extend beyond a superior surface **102** of the fusion cage **110**, and the inferior portion **130** of the plate **120** is adapted to extend beyond an inferior surface **104** of the fusion cage **110**. While the plate **120** is preferably substantially planar, the mid-portion **126** of the plate **120** can be curved to contour the shape of an anterior face **108** of the fusion cage **110**.

[**0044**] Each of the superior and inferior portions **128**, **130** of the plate **120** further include at least one aperture **122***a-d* formed therein for receiving a bone screw to secure the plate **120** to a vertebra. As shown, the superior and inferior portions **128**, **130** of the plate **120** each include two apertures **122***a*, **122***b*, **122***c*, **122***d* formed therein. The apertures **122***a-d* can have a variety of configurations, and exemplary configurations will be discussed in more detail with respect to **FIGS. 6-10**. **FIGS. 4A-4B** illustrate plate **120** mated to implant **110**, and apertures **122***a-d* having bone screws **146** and **148** disposed therethrough, each having a head and a shank.

[**0045**] The superior and inferior portions **128**, **130** of the plate **120** can also extend α_T an angle with respect to the mid-portion **126** of the plate **120**. In particular, referring to **FIG. 4A**, which shows plate **120** mated to cage **110**, superior and inferior portions **128**, **130** are angled with respect to the remainder of the plate **120** so that screws **146** and **148** extending therethrough are angled with respect to a medial plane "P" of the body **110**. The angle formed by the tab(s) and plate, as well as by the screw(s) and medial plane, is designated as "α" and it can vary depending on a patient's particular anatomy. Although the angle α can range from 15° to 60°, for most applications the angle α is about 20°. However, in other embodiments, the superior and inferior portions **128**, **130** can be flexible or readily bent with respect to the remainder of the plate **120**.

[**0046**] The mid-portion **126** of the plate **120** can also include a central aperture **132** formed therein. The central aperture **132** is positioned such that it is aligned with a central bore (not shown) formed in the fusion cage **110** when the plate **120** is mated to the cage **110**. The central aperture **132** and bore can be effective to receive an insertion tool and/or a fastening element, such as a screw, effective to mate the plate **120** to the fusion cage **110**. In one embodiment (not shown), the fastening element can be fixedly, but rotatably disposed within the central aperture **132** of the plate **120**, and/or it can be adapted to snap into the central bore in the fusion cage **110**. The fastening element can further be adapted to engage the fusion cage **110** upon rotation thereof. A person having ordinary skill in the art will appreciate that a variety of techniques can be used to mate the plate **120** to the fusion cage **110**.

[0047] Still referring to **FIGS. 3A-4B**, the plate **120** can also include a mating element **124***a*, **124***b* that is adapted to slidably engage and mate the plate **120** to the anterior face **108** of the fusion cage **110** in an anterior-posterior direction. While the mating element **124***a*, **124***b* can have a variety of configurations, **FIGS. 3A-3B** illustrate first and second opposed arms **124***a*, **124***b* that extend outward from the plate **120** in a direction substantially perpendicular to the substantially planar surface of the plate **120**. The arms **124***a*, **124***b* can be positioned anywhere on the plate **120**, but preferably the first arm **124***a* is positioned just superior to the mid-portion **126** of the plate **120** between the central aperture **132** and the superior apertures **122***a*, **122***b* formed in the superior portion **128** of the plate **120**, and the second arm **124***b* is positioned just distal to the mid-portion **126** of the plate **120** between the central aperture **132** and the inferior apertures **122***c*, **122***d* formed in the inferior portion **130** of the plate **120**. In other words, the arms **124***a*, **124***b* are positioned such that, when the plate **120** is mated to the fusion cage **110**, the arms **124***a*, **124***b* are configured to engage the superior and inferior faces **102**, **104** of the fusion cage **110**.

[0048] The shape of the arms **124***a*, **124***b* can also vary, but preferably each arm **124***a*, **124***b* is adapted to contour the shape of the fusion cage **110**. By way of non-limiting example, where the fusion cage **110** has domed or convex superior and inferior surfaces **102**, **104**, the arms **124***a*, **124***b* are preferably convex to contour the shape of the fusion cage **110**. The size of each arm **124***a*, **124***b* can vary as well, but preferably each arm **124***a*, **124***b* has a length l_a sufficient to enable the arms **124***a*, **124***b* to extend across α_T least a portion of the superior and inferior surfaces **102**, **104** of the fusion cage **110**, and a width W_a sufficient to allow the arms **124***a*, **124***b* to grasp the fusion cage **110**.

[0049] Each arm **124***a*, **124***b* can have a variety of configurations, but preferably the arms **124***a*, **124***b* include an engagement element **136***a*, **136***b* effective to engage the superior and inferior faces **102**, **104** of the fusion cage **110**. The engagement element **136***a*, **136***b* preferably provides an interference fit to temporarily secure the plate **120** to the fusion cage **110**. While the engagement element **136***a*, **136***b* can have a variety of configurations, the engagement element **136***a*, **136***b* can be, for example, in the form of at least one protrusion formed on an inner surface of each arm **124***a*, **124***b* that is adapted to sit in at least one indentation **138** (shown in **FIG. 4B**) formed in each of the superior and inferior faces **102**, **104** of the fusion cage **110**. As shown in **FIG. 3A**, the protrusion **136***a*, **136***b* on each arm **124***a*, **124***b* has a generally elongate shape. The indentation will be discussed in more detail with respect to **FIG. 4B** below. The arms **124***a*, **124***b* can optionally be flexible to allow the arms **124***a*, **124***b* to flex outward while sliding the plate **120** onto the fusion cage **110**, and to allow the arms **124***a*, **124***b* to then return to their original state whereby the protrusions **136***a*, **136***b* on the arms **124***a*, **124***b* to snap into the indentations **138** (only one indentation is shown in **FIG. 4B**) formed in the superior and inferior faces **102**, **104** of the fusion cage **110**.

[0050] Referring now to **FIG. 4B**, fusion cage **110** is shown in more detail. The fusion cage **110** can have a variety of configurations, but as previously stated it generally includes superior **102**, inferior **104**, posterior **106**, and anterior **108** faces. The inferior and superior faces **102**, **104** can have a flat to slightly convex shape, and/or a slightly tapered (about 10°) or wedge profile, wherein the body **110** is thicker at the anterior face **108** than at the posterior face **106**.

[0051] A central bore (not shown) can be formed in the anterior face **102** of the fusion cage **110**, and it preferably includes threads formed therein for receiving a fastening element, e.g., a screw. The threads are preferably spinal lock threads to provide a secure connection between the plate and the cage. First and second transverse elements **140**, **142** can join the posterior face **106** to the anterior face **108**, and a guide path **144** for receiving an insertion tool can extend across the superior and inferior faces **102**, **104** between the posterior and anterior faces **106**, **108**.

[0052] Fusion cage **110** further includes an arm-seating recess formed in each of the superior and inferior surfaces **102**, **104** for receiving the arms **124***a*, **124***b* formed on the plate **120**. The recesses can be formed in the guide path **144**, or more preferably the guide path **144** can form arm-seating recesses, as is shown in **FIG. 4B**. Each guide path **144** (only the guide path on the superior surface **102** is shown), or arm-seating recess, preferably has a depth d sufficient to receive the corresponding arm **124***a*, **124***b* formed on the plate **120** such that, when the plate **120** is mated to the fusion cage **110**, the arms **124***a*, **124***b* are flush with the superior and inferior surfaces **102**, **104** of the fusion cage **110**. This is particularly advantageous in that it allows the fusion cage **110** to be positioned between adjacent vertebrae prior to inserting the arms **124***a*, **124***b* into the arm-seating recesses **144** to attach the plate **120** to the fusion cage **110**. Each of the arm-seating recesses **144** further preferably includes α_T least one indentation **138** formed therein for receiving the protrusion **136***a*, **136***b* formed on the inner surface of each arm **124***a*, **124***b*. As shown, the indentation **138** is in the form of an elongate groove that is adapted to receive and seat the protrusion **136***a*, **136***b* formed on each arm **124***a*, **124***b*. A person having ordinary skill in the art will appreciate that the arms **124***a*, **124***b* can merely slid into and seat within the recess **144** formed in the fusion cage **110**, and that they do not need to engage the fusion cage **110**. An engagement mechanism is merely preferred to allow the plate **120** to be α_T least temporarily secured to the fusion cage **110** during implantation.

[0053] The fusion cage **110** can optionally include a number of bone engaging surface features **146** formed on the superior and inferior surfaces **102**, **104** to facilitate the secure mounting of the cage **110** between adjacent vertebrae. The bone engaging surface features **146** can be present on the entire surface area of the superior and inferior surfaces **102**, **104**, or optionally, selected regions of the superior and inferior surfaces **102**, **104** can be free of surfaces features **146**. The bone engaging surface features **146** can have a variety of shapes, but are preferably in the form of wedge-shaped ridges that extend is a direction transverse to the posterior **106** and anterior **108** faces of the fusion cage **110**. Each bone engaging surface feature **146** includes a posterior side wall **148** and an anterior side wall **149**, which meet at a peak **150**. The side walls **148**, **149** of each surface feature **146** can be angled or sloped to facilitate insertion of the cage **110** between adjacent vertebrae and to assist in preventing the fusion cage **110** from becoming dislodged. The size of the surface features **146** can also vary but preferably the surface features **146** have a size sufficient to cause each

surface feature **146** to engage and penetrate the adjacent vertebrae. It will be understood that while ridges **146** have been shown in a preferred embodiment, it is contemplated that there are a variety of structures which could provide a surface for effective engagement with the vertebral bodies to limit expulsion from the disc space.

[**0054**] **FIG. 5** illustrates another embodiment of a spinal fixation assembly **100'**. In this embodiment, the arms **124***a*, **124***b* on the plate **120** are adapted to extend into opposed superior and inferior bores **152**, **154**, rather than recesses **144**, formed in the fusion cage **110'**. As shown, the arms **124***a*, **124***b* can merely slide into the bores **152**, **154** that extend into the fusion cage **110'** to provide an alignment mechanism between the cage **110'** and the plate **120**. The bores **152**, **154** can optionally be adapted to receive the engagement mechanism **136***a*, **136***b* formed on each arm **124***a*, **124***b* to at least temporarily secure the arms **124***a*, **124***b* within the bores **152**, **154**. By way of non-limiting example, the arms **124***a*, **124***b* and the bores **152**, **154** can each be tapered to provide an interference fit between the arms **124***a*, **124***b* and the bores **152**, **154**. Alternatively, the arms **124***a*, **124***b* can include a press-fit pin that depresses upon insertion of the arms **124***a*, **124***b* into the bores **152**, **154**, and then once each arm **124***a*, **124***b* is fully inserted into the bore **152**, **154**, returns to its originally state whereby the pins extending into corresponding indentations formed within the bores **152**, **154**. A person having ordinary skill in the art will appreciate that a variety of mechanisms can be used to secure the arms **124***a*, **124***b* of the plate **120** within the bores **152**, **154** formed in the fusion cage **110'**.

[**0055**] In use, the adjacent vertebrae are prepared and distracted and the fusion cage **110** is placed therebetween, as previously described above. Once the fusion cage **110** is in position, the fixation plate **120** can be placed adjacent to the anterior face **108** of the fusion cage **110** to position the superior and inferior portions **128**, **130** of the plate **110** against the anterior rims of the adjacent vertebrae. The plate **120** is then preferably mated to the anterior face **108** of the fusion cage **110** by positioning the arms **124***a*, **124***b* between the superior and inferior surfaces **102**, **104** of the fusion cage **110** and the adjacent vertebrae. Where plate **120'** is used and the cage **110'** includes arm-receiving recesses **152**, **154**, the arms **124***a'*, **124***b'* of the plate **120'** can be easily slid into the recesses **152**, **154** to engage the cage **110'**. A center screw (not shown) can then be inserted through a central aperture **132** in the plate **120** and through a bore in the cage (e.g., **FIG. 5** shows bore **134** formed in the cage **110'**) to secure the plate **120** to the cage **110**, and one or more bone screws (only two bone screws **146**, **148** are shown in **FIG. 4A**) can be inserted through the apertures **122***a*, **122***b*, **122***c*, **122***d* in the superior and inferior portions **128**, **130** of the plate **120** to secure the plate **120** to the adjacent vertebrae.

[**0056**] The present invention also provides a variety of configurations for securing a spinal fixation plate to adjacent vertebrae. In particular, **FIGS. 6-10** illustrate embodiments of different apertures for use with a plate according to the present invention. The apertures are adapted to provide a more secure connection between the plate and a vertebrae. While the various embodiments will be described in relation to particular spinal fixation plates disclosed herein, a person having ordinary skill in the art will appreciate that the virtually any technique known in the art can be used with any of the various embodiments of spinal fixation plates, as well as with a variety of vertebral implants.

[**0057**] **FIG. 6** illustrates one embodiment of an aperture **160** formed in a tab **166** of a plate and having a split bushing **162** disposed therein. A bone screw **174** is disposed through the aperture **160** and the split bushing **162**. The aperture **160** includes a first end **168**, a second end **170**, and a sidewall **172** extending therebetween. The first end **168** is preferably adapted to receive a bone screw **174**, or similar type of fixation element, and to seat the head **164** of the bone screw **174** therein. The aperture **160** can extend through the tab **166** in the plate along a central axis a_a that is substantially perpendicular to a central plane a_p of the tab **166**, or alternatively the central axis a_a of the aperture **160** can be offset from, or disposed at an angle with respect to, the plane a_p of the tab **166**. The sidewall **172** of the aperture **160** can also vary and can be either substantially planar along the length thereof between the first and second ends **168**, **170** of the aperture **160**, or the sidewall **172** can be curved or can extend at an angle. As shown in **FIG. 6**, the sidewall **172** has a substantially concave shape to receive the split bushing **162**.

[**0058**] The split bushing **162** is disposed within the aperture **160** and it has a generally cylindrical shape with a gap (not shown) formed therein to allow the bushing **162** to be expanded. The split bushing **162** includes an outer surface **176** which can have a shape adapted to conform to the shape of the sidewall **172** of the aperture **160**, and an inner surface **178** which is adapted to receive a bone screw **174**. By way of non-limiting example, the split bushing **160** can have a convex outer surface **172** to allow the split bushing **162** to sit within the concave sidewall **172** of the aperture **160**. The split bushing **162** further includes an inner diameter d_b that can vary between opposed first and second ends **168**, **170** of the split bushing **162**. Preferably, the diameter d_b of the bushing **162** at the first end **168** is larger than the diameter d_b of the bushing **162** at the second end **170**. The tapered diameter allows the bushing **162** to receive a portion of the tapered undersurface of the head **164** of the bone screw **174**.

[**0059**] **FIG. 7** illustrates the bone screw **174** in more detail having a tapered head **164** adapted to fit within the split bushing **162** shown in **FIG. 6**. As shown, the bone screw **174** includes a head **164** and a threaded shank **180**. The head **164** is tapered preferably at an angle substantially the same as the angle of the tapered inner diameter d_b of the split bushing **162**. In use, upon tightening the bone screw **174**, the split bushing **162** expands and provides an interference fit between the bone screw **174** and the aperture **160**, thereby creating a rigid lock to secure the plate to a vertebrae. The tapered diameter d_b of the bushing **162** also allows the bone screw **174** to be inserted at variable angles a_s with respect to the central axis a_a of the aperture, as shown in **FIG. 6**.

[**0060**] **FIG. 8** illustrates another embodiment of an aperture **190** having a split bushing **192** disposed therein. In this embodiment, the split bushing **192** includes threads **194** formed on an inner surface thereof to mate with corresponding threads **196** formed on a bone screw **198**. The threads **194**, **196** are particularly effective to prevent the bone screw **198** from backing out of the aperture **190**, and to provide a rigid lock between the screw **198** and the aperture **190** thereby securely mating the plate to a vertebrae. In this embodiment, the aperture **190** preferably includes an anti-

rotation mechanism effective to prevent the split bushing **192** from rotating while the screw **198** is threaded therethrough. The anti-rotation mechanism can have a variety of configurations and, by way of non-limiting example, can be a pin or raised protrusion (not shown) disposed within the aperture **190** and adapted to extend into the gap formed in the split bushing **192**.

[**0061**] **FIGS. 9-10** illustrate yet another embodiment of an aperture **200** and bone screw **202** for use with the present invention. As shown in **FIG. 10**, the aperture **200** includes a first end **204**, a second end **206**, and a sidewall **208** extending therebetween and defining an inner lumen **210**. The inner lumen **210** includes a first portion **214** positioned adjacent the first end **204**, and a second portion **212** positioned adjacent the second end **206** of the aperture **200**. The first portion **214** of the inner lumen **210** has a shape and size adapted to receive the head **216** of a bone screw **202**. **FIG. 9** illustrates an exemplary embodiment of a bone screw **202** for use with a plate having an aperture **200** as shown in **FIG. 10**. The bone screw **202** includes a head **216** and a threaded shank **218**. The head **216** of the bone screw **202** includes a substantially convex, slightly rounded outer surface **220**. The first portion **214** of the inner lumen **210** of the aperture **200** has a concave sidewall **222**, e.g., a generally spherical recess, to allow the rounded head **216** of the bone screw **202** to seat therein. The second portion **212** of the inner lumen **210** is substantially cylindrical and has a shape and size adapted to receive the threaded shank **218** of a bone screw **202**. Preferably, the second portion **212** of the inner lumen **210** has a diameter d_2 greater than a diameter d_1 of the shank **218** of the bone screw **202**. In use, the first and second portions **214**, **212** of the inner lumen **210** allow the bone screw **202** to translate within the aperture **200** such that the screw **202** can be inserted at varying angles. While the aperture **200** does not include a split bushing to provide a rigid connection between the bone screw **202** and the plate, the aperture **200** allows the full exertion of natural biomechanical compression stresses through the vertebral bodies into which the screw **202** is inserted.

[**0062**] Referring back to **FIG. 7**, in yet another embodiment, the bone screw **174** can include a shoulder **230** formed thereon that abuts a corresponding shoulder (not shown) formed in an aperture. The shoulder **230** is formed by a difference, or stepped increase, in the diameter d_3, d_4 of the screw head **164** and in the diameter of the aperture, or in the split bushing if the aperture includes one. In use, the bone screw **174** is inserted through an aperture and once the shoulder **230** on the screw head **164** passes the shoulder **230** in the aperture, or in the split bushing, the shoulders will engage thereby preventing the screw **174** from backing out of the aperture.

[**0063**] The fusion cage and plate of the present invention can be made from a variety of materials. By way of non-limiting example, a carbon fiber composite or other radiolucent material is well suited for fabrication of the body, and titanium or carbon fiber composites are suitable materials for the plate **20**.

[**0064**] As should be readily apparent from the preceding description, the present invention provides many advantages. For example, the fusion cage can be sufficiently broad and thick so at only a single cage is needed to replace an excised disc. The profile and slightly bowed or convex superior and inferior surfaces of the fusion cage body closely approximate the shape of a natural disc and provide an excellent, stable, load-bearing surface. The plate, when included, ensures that the body will not become dislodged from the spine, yet is readily accessible with an anterior approach. Further, the plate allows bone screws to be deeply embedded into the vertebral bodies without piercing or otherwise damaging the hard, load-bearing, cortical bone. Also, both the plate and the body include features that allow for relatively easy manipulation and insertion with appropriately configured surgical tools.

[**0065**] Of course, one skilled in the art will appreciate further features and advantages of the invention based on the above-described embodiments. Accordingly, the invention is not to be limited by what has been particularly shown and described, except as indicated by the appended claims. All publications and references cited herein are expressly incorporated herein by reference in their entirety.

What is claimed is:

1. A spinal fixation plate, comprising:

a mid-portion having opposed superior and inferior ends, first and second opposed side edges, and opposed posterior and anterior faces,

a superior portion formed on the superior end of the mid-portion and including at least one thru-bore formed therein, the superior portion being positioned at an angle with respect to the mid-portion in a direction anterior to the anterior face of the mid-portion, and

an inferior portion formed on the inferior end of the mid-portion and including at least one thru-bore formed therein, the inferior portion being positioned at an angle with respect to the mid-portion in a direction anterior to the anterior face of the mid-portion;

wherein the angles of the superior and inferior portions are configured such that, when the plate is positioned in relation to adjacent superior and inferior vertebrae, the superior and inferior portions will be positioned against an anterior rim of each vertebra.

2. The spinal fixation plate of claim 1, wherein the angle is less than 150.

3. The spinal fixation plate of claim 1, wherein the superior and inferior portions each include first and second thru-bores formed therein and adapted to receive a fastening element to mate the plate to adjacent vertebrae.

4. The spinal fixation plate of claim 1, wherein the mid-portion is thru-bore free.

5. The spinal fixation plate of claim 1, further comprising a posterior curvature formed about a longitudinal axis extending between the superior and inferior portions.

6. The spinal fixation plate of claim 5, wherein the superior and inferior portions each include first and second thru-bore tabs formed on opposed sides of the longitudinal axis of the plate, and wherein each tab is angled toward one another in a posterior direction as a result of the curvature in the plate.

7. The spinal fixation plate of claim 6, wherein an angle between a posterior face of the first thru-bore tab and a posterior face of the second thru-bore tab in each of the superior and inferior portions is in the range of about 150° to 180°.

8. The spinal fixation plate of claim 6, wherein an angle between a posterior face of the first thru-bore tab and a posterior face of the second thru-bore tab in each of the superior and inferior portions is about 160°.

9. The spinal fixation plate of claim 5, wherein the posterior curvature is formed in each of an anterior face and a posterior face.

10. The spinal fixation plate of claim 5, wherein at least one of the mid-portion, the superior portion, and the inferior portion has a substantially concave posterior face as a result of the curvature formed in the plate.

11. The spinal fixation plate of claim 10, wherein at least one of the mid-portion, the superior portion, and the inferior portion has a substantially convex anterior face as a result of the curvature formed in the plate.

12. The spinal fixation plate of claim 5, wherein the angle between an anterior face of the superior and inferior portions and an anterior face of the mid-portion is less than about 15°.

13. The spinal fixation plate of claim 5, wherein an angle between an anterior face of the superior and inferior portions and an anterior face of the mid-portion is about 10°.

14. The spinal fixation plate of claim 1, wherein the posterior face of the mid-portion is substantially planar.

15. A spinal fixation plate, comprising:

a mid-portion having opposed superior and inferior ends, first and second opposed side edges, and opposed posterior and anterior faces,

a superior portion formed on the superior end of the mid-portion and including at least one thru-bore formed therein, and

an inferior portion formed on the inferior end of the mid-portion and including at least one thru-bore formed therein;

wherein the plate further includes a posterior curvature formed about a longitudinal axis extending between the superior and inferior portions.

16. The spinal fixation plate of claim 15, wherein the superior and inferior portions each include first and second thru-bores formed therein and adapted to receive a fastening element to mate the plate to adjacent vertebrae.

17. The spinal fixation plate of claim 15, wherein the mid-portion is thru-bore free.

18. The spinal fixation plate of claim 15, wherein the superior and inferior portions extend at an angle with respect to the mid-portion in a direction anterior to the anterior face of the mid-portion.

19. The spinal fixation plate of claim 15, wherein the superior and inferior portions each include first and second thru-bore tabs formed on opposed sides of the longitudinal axis of the plate, and wherein each tab is angled toward one another in a posterior direction as a result of the curvature in the plate.

20. The spinal fixation plate of claim 19, wherein an angle between a posterior face of the first thru-bore tab and a posterior face of the second thru-bore tab in each of the superior and inferior portions is in the range of about 150° to 180°.

21. The spinal fixation plate of claim 19, wherein an angle between a posterior face of the first thru-bore tab and a posterior face of the second thru-bore tab in each of the superior and inferior portions is about 160°.

22. The spinal fixation plate of claim 15, wherein the curvature is formed in each of an anterior face and a posterior face of the plate.

23. The spinal fixation plate of claim 15, wherein at least one of the mid-portion, the superior portion, and the inferior portion has a substantially concave posterior face as a result of the curvature formed in the plate.

24. The spinal fixation plate of claim 23, wherein at least one of the mid-portion, the superior portion, and the inferior portion has a substantially convex anterior face as a result of the curvature formed in the plate.

25. The spinal fixation plate of claim 15, wherein the angle between an anterior face of the superior and inferior portions and an anterior face of the mid-portion is less than about 15°.

26. The spinal fixation plate of claim 15, wherein an angle between an anterior face of the superior and inferior portions and an anterior face of the mid-portion is about 10°.

27. A spinal fixation plate, comprising a mid-portion and opposed superior and inferior portions extending at an angle with respect to the mid-portion in a direction anterior to an anterior face of the mid-portion, the superior and inferior portions each including first and second thru-bore tabs formed on opposed sides of a longitudinal axis extending between the superior and inferior portions, the first and second thru-bores tabs being angled toward one another in a posterior direction.

28. The spinal fixation plate of claim 27, wherein the first and second thru-bores tabs in the superior and inferior portions each include a thru-bore formed therein and adapted to receive a fastening element to mate the plate to adjacent vertebrae.

29. The spinal fixation plate of claim 27, wherein an angle between a posterior face of the first thru-bore tab and a posterior face of the second thru-bore tab in each of the superior and inferior portions is in the range of about 150° to 180°.

30. The spinal fixation plate of claim 27, wherein an angle between a posterior face of the first thru-bore tab and a posterior face of the second thru-bore tab in each of the superior and inferior portions is about 160°.

31. The spinal fixation plate of claim 27, wherein the mid-portion is curved about a longitudinal axis such that opposed side edges of the mid-portion are positioned posterior to a posterior face of the mid-portion at the longitudinal axis of the mid-portion.

32. The spinal fixation plate of claim 27, wherein at least one of the mid-portion, the superior portion, and the inferior portion has a substantially concave posterior face as a result of the curve formed in the plate.

33. The spinal fixation plate of claim 32, wherein at least one of the mid-portion, the superior portion, and the inferior portion has a substantially convex anterior face as a result of the curve formed in the plate.

34. The spinal fixation plate of claim 27, wherein an angle between an anterior face of the superior and inferior portions and an anterior face of the mid-portion is less than about 15°.

35. The spinal fixation plate of claim 27, wherein an angle between an anterior face of the superior and inferior portions and an anterior face of the mid-portion is about 10°.

36. A spinal fixation plate, comprising a mid-portion and opposed superior and inferior portions extending at an angle that is less than about 15° with respect to the mid-portion in

a direction anterior to an anterior face of the mid-portion, the superior and inferior portions each including at least one thru-bore formed therein.

37. The spinal fixation plate of claim 36, wherein the superior and inferior portions each include first and second thru-bores tabs formed therein on opposed sides of a longitudinal axis extending between the superior and inferior portions, each thru-bore tab having a thru-bore formed therein.

38. The spinal fixation plate of claim 37, wherein the first and second thru-bores tabs are angled toward one another in a posterior direction.

39. The spinal fixation plate of claim 36, wherein the at least one thru-bore in the superior and inferior portions is adapted to receive a fastening element to mate the plate to adjacent vertebrae.

40. The spinal fixation plate of claim 37, wherein an angle between a posterior face of the first thru-bore tab and a posterior face of the second thru-bore tab in each of the superior and inferior portions is in the range of about 150° to 180°.

41. The spinal fixation plate of claim 37, wherein an angle between a posterior face of the first thru-bore tab and a posterior face of the second thru-bore tab in each of the superior and inferior portions is about 160°.

42. The spinal fixation plate of claim 36, wherein at least a portion of the plate is curved about a longitudinal axis extending between the superior and inferior portions.

43. The spinal fixation plate of claim 42, wherein at least one of the mid-portion, the superior portion, and the inferior portion has a substantially concave posterior face as a result of the curve formed in at least a portion of the plate.

44. The spinal fixation plate of claim 42, wherein at least one of the mid-portion, the superior portion, and the inferior portion has a substantially convex anterior face as a result of the curve formed in at least a portion of the plate.

45. The spinal fixation plate of claim 36, wherein the angle between the superior and inferior portions and the mid-portion is about 10°.

46. A spinal fixation kit, comprising:

an implant adapted to be disposed between adjacent vertebra and having posterior, anterior, superior, and inferior faces; and

at least one fixation plate having a mid-portion with opposed superior and inferior portions that define a plate length that is greater than a height of the implant between the superior and inferior faces, the superior and inferior portions including first and second opposed thru-bore tabs that extend in a direction anterior to an anterior face of the mid-portion of the fixation plate such that, wherein the implant is disposed between adjacent vertebra and the mid-portion of the fixation plate is positioned adjacent the anterior face of the implant, the first and second opposed thru-bore tabs are positioned against the anterior rims of the adjacent vertebrae.

47. The spinal fixation kit of claim 46, wherein the first and second opposed thru-bore tabs in each of the superior and inferior portions extend at an angle toward one another in a posterior direction.

48. The spinal fixation kit of claim 46, wherein the fixation plate is adapted to move freely relative to the implant when the implant is positioned between adjacent vertebrae and the fixation plate is affixed to the adjacent vertebrae.

49. The spinal fixation kit of claim 46, wherein the mid-portion of the fixation plate is thru-bore free.

50. The spinal fixation kit of claim 46, further comprising at least one fastening element adapted to extend through a thru-bore tab in the superior and inferior portions of the fixation plate to mate the plate to adjacent vertebrae.

51. The spinal fixation kit of claim 50, wherein an angle between a posterior face of the first thru-bore tab and a posterior face of the second thru-bore tab in each of the superior and inferior portions is in the range of about 150° to 180°.

52. The spinal fixation kit of claim 50, wherein an angle between a posterior face of the first thru-bore tab and a posterior face of the second thru-bore tab in each of the superior and inferior portions is about 160°.

53. The spinal fixation kit of claim 46, wherein the mid-portion of the plate is curved in a posterior direction about a longitudinal axis extending between the superior and inferior portions of the plate.

54. The spinal fixation kit of claim 53, wherein the plate has a substantially concave posterior face as a result of the curve formed therein.

55. The spinal fixation kit of claim 54, wherein the plate has a substantially convex anterior face as a result of the curve formed therein.

56. The spinal fixation kit of claim 46, wherein an angle between an anterior face of the superior and inferior portions and an anterior face of the mid-portion is less than about 15°.

57. The spinal fixation kit of claim 46, wherein an angle between an anterior face of the superior and inferior portions and an anterior face of the mid-portion is about 10°.

58. The spinal fixation kit of claim 46, further comprising a plurality of spinal fixation plates having varying lengths.

59. A method for implanting a spinal fixation plate, comprising:

positioning a spinal fixation plate to extend between adjacent vertebrae; and

inserting at least one fastening element through at least one thru-bore formed in the spinal fixation plate and through an anterior rim of at least one of the adjacent vertebrae to attach the spinal fixation plate to at least one of the adjacent vertebra.

60. The method of claim 59, wherein the spinal fixation plate includes a mid-portion, a superior portion, and an inferior portion, and wherein the superior portion is positioned adjacent an anterior rim of a superior vertebra and the inferior portion is positioned adjacent an anterior rim of an adjacent inferior vertebra.

61. The method of claim 60, wherein at least one fastening element is inserted through at least one thru-bore formed in each of the superior and inferior portions.

62. The method of claim 59, further comprising, prior to the step of positioning a spinal fixation plate, distracting the adjacent vertebrae and removing at least a portion of a vertebral disc disposed therebetween.

63. The method of claim 62, further comprising, after the step of distracting and removing, inserting a spinal implant between the adjacent vertebra.

64. The method of claim 63, wherein a mid-portion of the spinal fixation plate is positioned adjacent an anterior face of the implant.

65. The method of claim 63, wherein the spinal implant comprises an inner body fusion device.

66. The method of claim 63, wherein the spinal implant comprises an artificial disc.

67. The method of claim 60, wherein the superior and inferior portions of the spinal fixation plate include longitudinally opposed thru-bores tabs, each having a thru-bore formed therein for receiving a fastening element.

68. The method of claim 67, wherein the opposed thru-bore tabs in the superior portion are angled toward one another in a posterior direction, and the thru-bore tabs in the inferior portion are angled toward one another in a posterior direction.

69. The method of claim 68, wherein an angle between a posterior face of the first thru-bore tab and a posterior face of the second thru-bore tab in each of the superior and inferior portions is in the range of about 150° to 180°.

70. The method of claim 68, wherein an angle between a posterior face of the first thru-bore tab and a posterior face of the second thru-bore tab in each of the superior and inferior portions is about 160°.

71. The method of claim 60, wherein the superior and inferior portions of the plate are angled in a direction anterior to an anterior face of a mid-portion of the plate, such that the mid-portion of the plate is flush or sub-flush relative to an anterior face of the adjacent vertebrae.

72. The method of claim 71, wherein an angle between an anterior face of the superior and inferior portions and an anterior face of the mid-portion is less than about 15°.

* * * * *