US007041135B2

(12) **United States Patent**
Michelson

(10) **Patent No.: US 7,041,135 B2**
(45) **Date of Patent: May 9, 2006**

(54) **INTERBODY SPINAL FUSION IMPLANTS WITH SINGLE-LOCK FOR LOCKING OPPOSED SCREWS**

(75) Inventor: **Gary K. Michelson**, Venice, CA (US)

(73) Assignee: **SDGI Holdings, Inc.**, Wilmington, DE (US)

(*) Notice: Subject to any disclaimer, the term of this patent is extended or adjusted under 35 U.S.C. 154(b) by 154 days.

(21) Appl. No.: **10/310,522**

(22) Filed: **Dec. 5, 2002**

(65) **Prior Publication Data**

US 2003/0078668 A1 Apr. 24, 2003

Related U.S. Application Data

(62) Division of application No. 09/565,392, filed on May 5, 2000, now Pat. No. 6,558,423.

(60) Provisional application No. 60/133,214, filed on May 7, 1999, provisional application No. 60/133,214, filed on May 5, 1999.

(51) **Int. Cl.**
A61F 2/44 (2006.01)

(52) **U.S. Cl.** **623/17.11**

(58) **Field of Classification Search** .. 623/17.11–17.16, 623/FOR. 17
See application file for complete search history.

(56) **References Cited**

U.S. PATENT DOCUMENTS

3,426,364	A	2/1969	Lumb
3,875,595	A	4/1975	Froning
4,349,921	A	9/1982	Kuntz
4,501,269	A	2/1985	Bagby
RE31,865	E	4/1985	Roux
4,599,086	A	7/1986	Doty
4,636,217	A	1/1987	Ogilvie et al.
4,714,469	A	12/1987	Kenna
4,743,256	A	5/1988	Brantigan
4,759,769	A	7/1988	Hedman et al.
4,820,305	A	4/1989	Harms et al.
4,877,020	A	10/1989	Vich
4,878,915	A	11/1989	Brantigan
4,904,261	A	2/1990	Dove et al.

(Continued)

FOREIGN PATENT DOCUMENTS

DE	3 505 567 A1	5/1986

(Continued)

OTHER PUBLICATIONS

Crock, H.V.: Practice of Spinal Surgery: Springer-Verlag/Wien, New York (1983), pp. 74-85.

(Continued)

Primary Examiner—David H. Willse
(74) *Attorney, Agent, or Firm*—Martin & Ferraro, LLP

(57) **ABSTRACT**

An apparatus including an interbody spinal fusion implant having a leading end, a trailing end, and a length therebetween, and opposed upper and lower portions adapted to contact each of the adjacent vertebral bodies. Each of the upper and lower portions has at least one screw hole passing therethrough proximate the trailing end. The apparatus further includes bone screws adapted for placement through the screw holes of the upper and lower portions and into each of the adjacent vertebral bodies adjacent the disc space to be fused and into which the implant is adapted to be positioned. At least one lock may be used to prevent the bone screws from backing out of the vertebral bodies and implant.

120 Claims, 23 Drawing Sheets

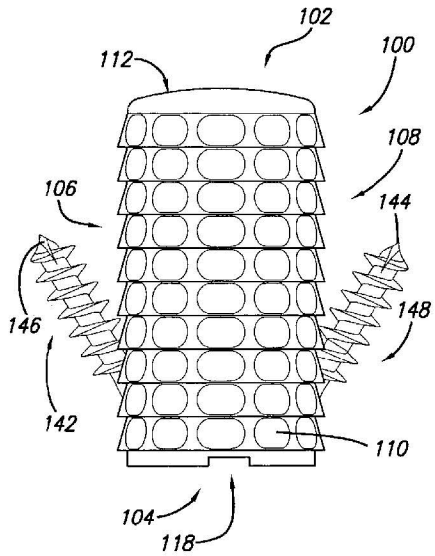

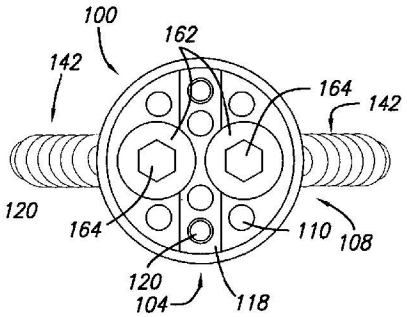

GLOBUS EX. 1020

U.S. PATENT DOCUMENTS

4,955,908	A	9/1990	Frey et al.	
4,961,740	A	10/1990	Ray et al.	
5,015,247	A	5/1991	Michelson	
5,026,373	A	6/1991	Ray et al.	
5,055,104	A	10/1991	Ray	
5,258,031	A	11/1993	Salib et al.	
5,397,364	A	3/1995	Kozak et al.	
5,425,772	A	6/1995	Brantigan	
5,458,638	A	10/1995	Kuslich et al.	
5,489,307	A	2/1996	Kuslich et al.	
5,489,308	A	2/1996	Kuslich et al.	
5,571,109	A	11/1996	Bertagnoli	
5,593,409	A	1/1997	Michelson	
5,609,636	A	3/1997	Kohrs et al.	
5,645,598	A	7/1997	Brosnahan, III	
5,658,337	A	8/1997	Kohrs et al.	
5,669,909	A	9/1997	Zdeblick et al.	
5,683,463	A	11/1997	Godefroy et al.	
5,766,252	A	6/1998	Henry et al.	
5,776,196	A	7/1998	Matsuzaki et al.	
5,782,919	A	7/1998	Zdeblick et al.	
D397,439	S	8/1998	Koros et al.	
5,800,547	A	9/1998	Schäfer et al.	
5,800,550	A	9/1998	Sertich	
5,814,084	A	9/1998	Grivas et al.	
5,861,041	A	1/1999	Tienboon	
5,888,223	A	3/1999	Bray, Jr.	
5,904,719	A	5/1999	Errico et al.	
6,033,438	A	3/2000	Bianchi et al.	
6,066,175	A	5/2000	Henderson et al.	
6,206,922	B1 *	3/2001	Zdeblick et al.	623/17.11

FOREIGN PATENT DOCUMENTS

EP	0 179 695 A1		4/1986
EP	0 599 419 A2		6/1994
EP	0 637 440 B1		10/1997
ES	283078		5/1985
FR	2 727 003		5/1996
WO	WO 94/26193	*	11/1994
WO	95/26164		10/1995

OTHER PUBLICATIONS

Bagby, G.W.: Arthrodesis by the Distraction-Compression Method Using a Stainless Steel Implant; Orthopedics, vol. II, No. 6, pp. 931-934 (Jun. 1987).

Laparoscopic Bone Dowel Surgical Technigue: Brochure of Sofamor Danek (1995).

Brochure of University of Florida Tissue Bank: MD-I and MD-II Custom Machine Cortical Dowels: (*Circa* 1996).

Brochure of University of Florida Tissue Bank; MD-III Threaded Cortical Dowel: (*Circa* 1996).

Glazer, P.A., et al.; Biomechanical Analysis of Multilevel Fixation Methods in the Lumbar Spine: Spine, vol. 22, No. 2, pp. 171-182 (1997).

Ray, C.D.; Spinal Interbody Fusions: A Review, Featuring New Generation Techniques; Neurosurgery Quarterly. 7(2): 135-156 (1997).

A picture of a Medtronic, Sofamor Danek Display: titled "Evolving With Your Needs" (Apr. 6, 2000).

* cited by examiner

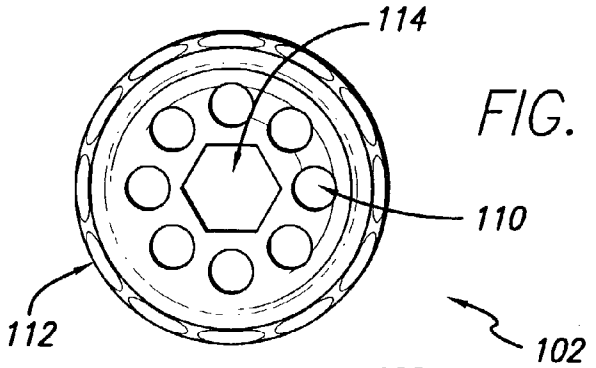

FIG. 3

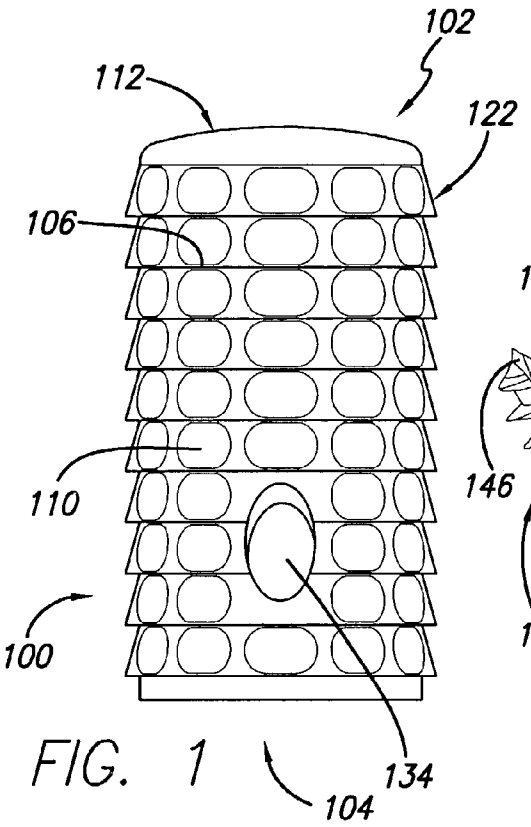

FIG. 1

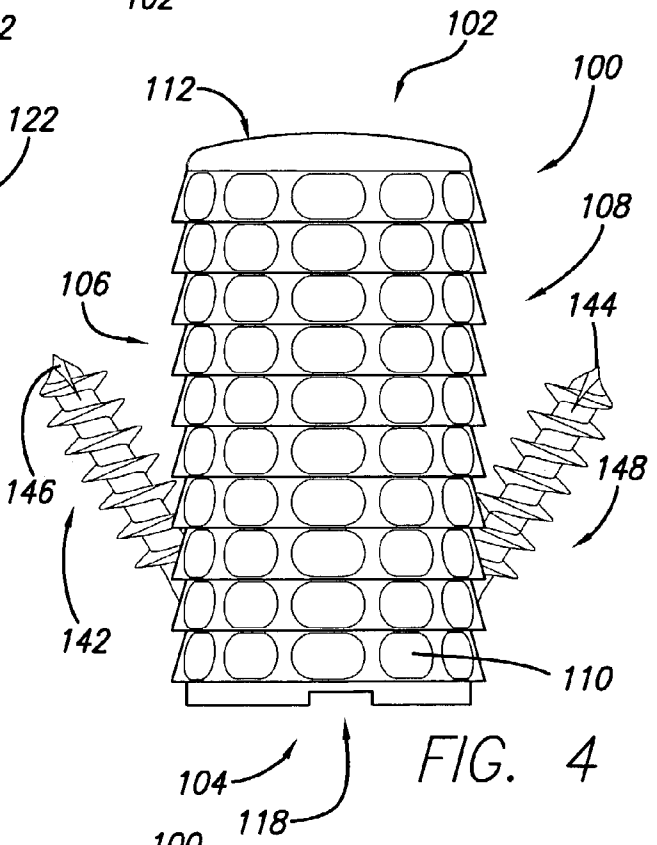

FIG. 4

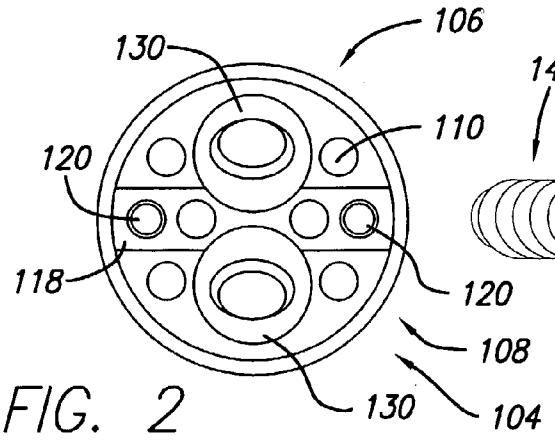

FIG. 2

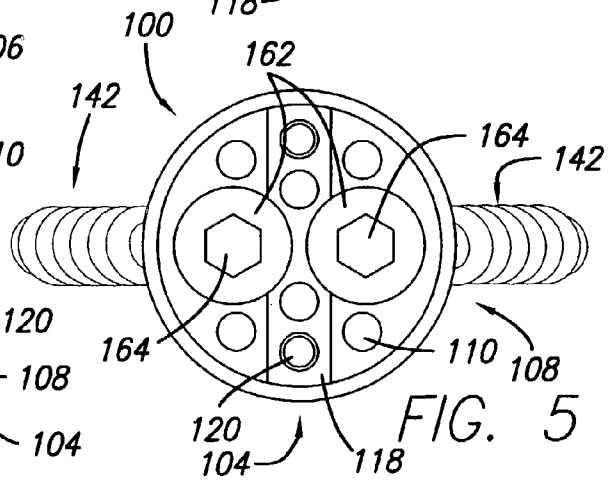

FIG. 5

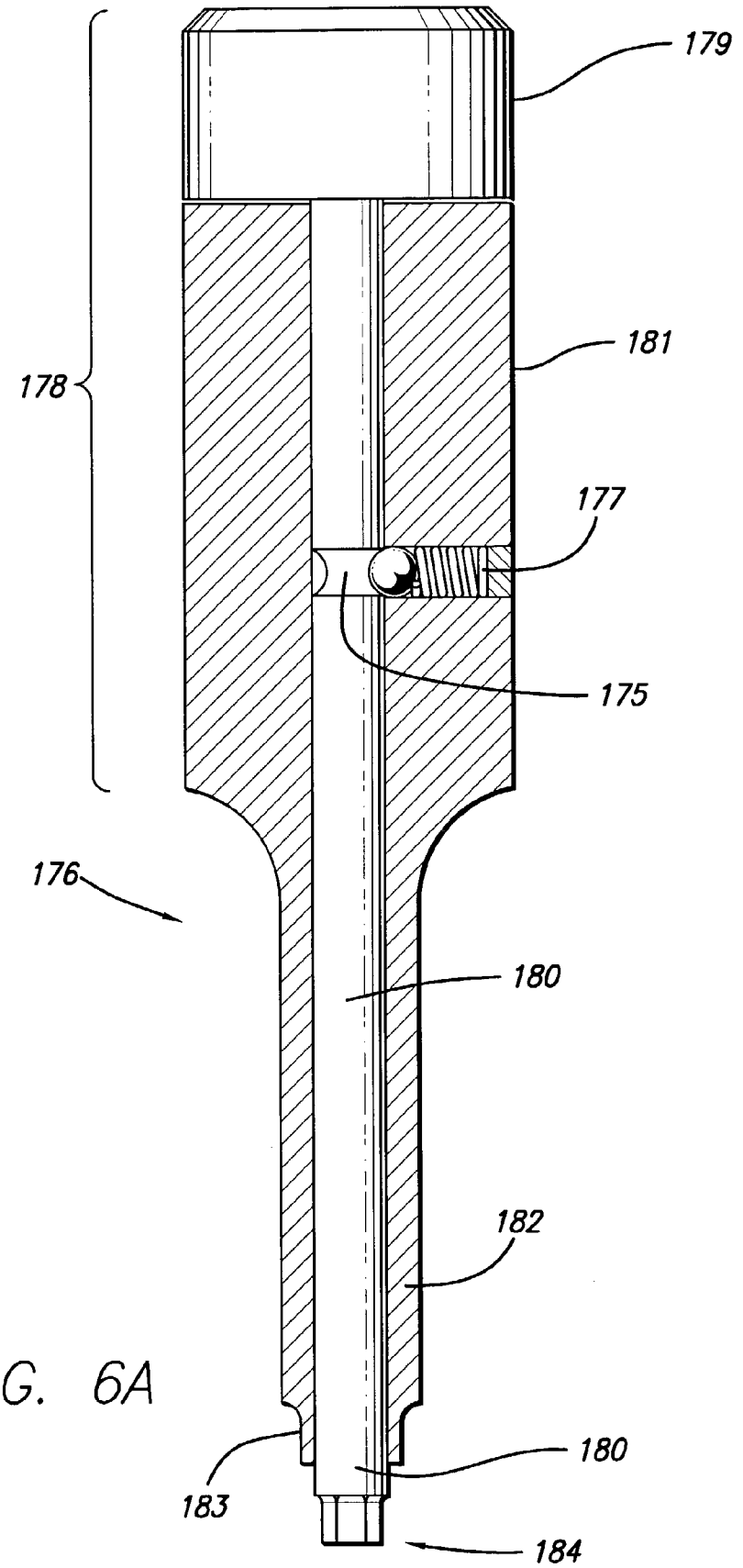

FIG. 6A

FIG. 6B

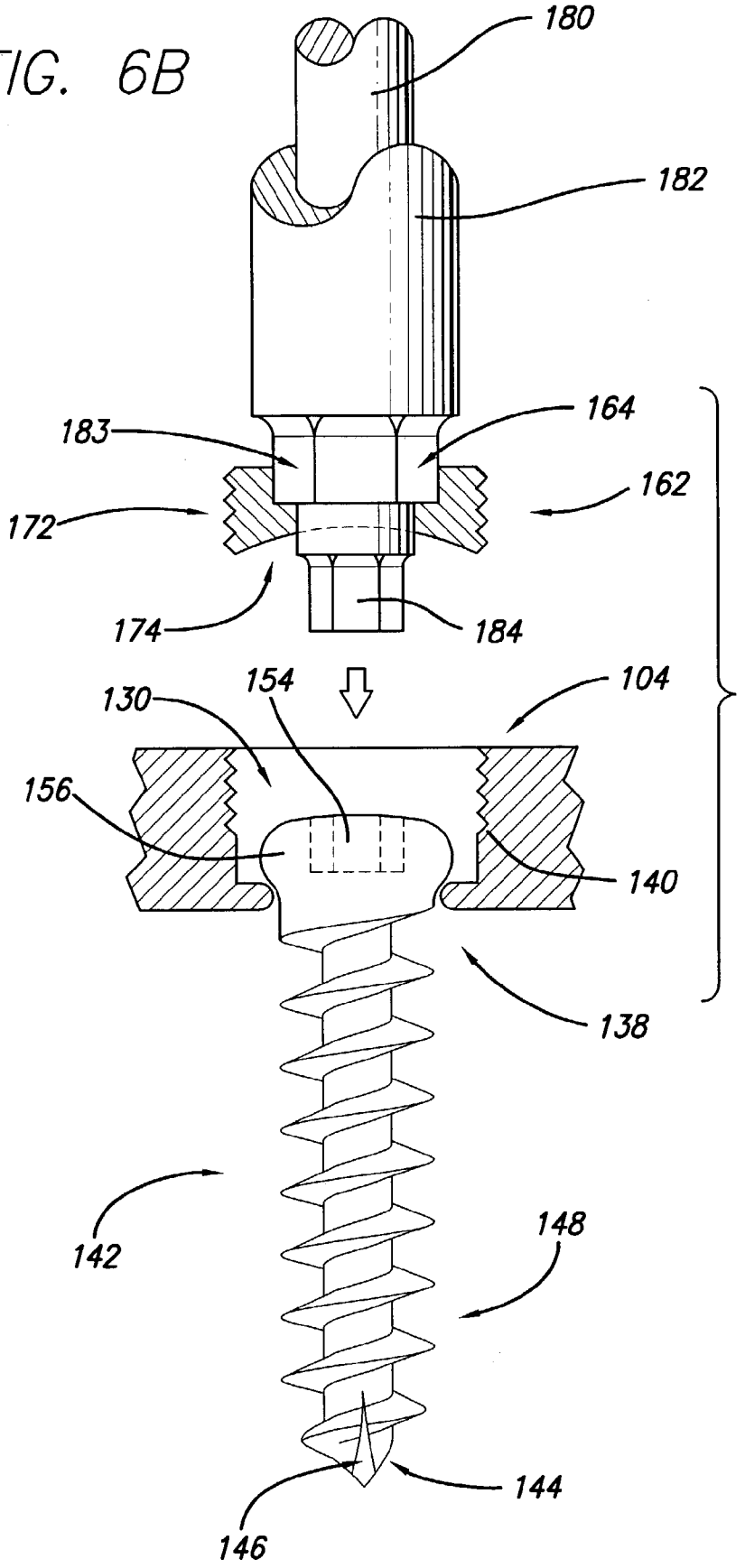
180
182
183
164
162
172
174
184
154
130
104
156
140
138
142
148
144
146

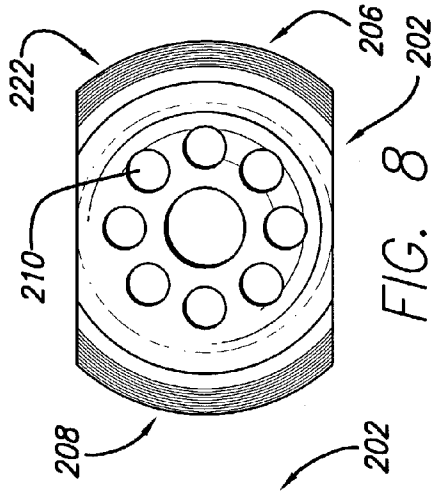

FIG. 8

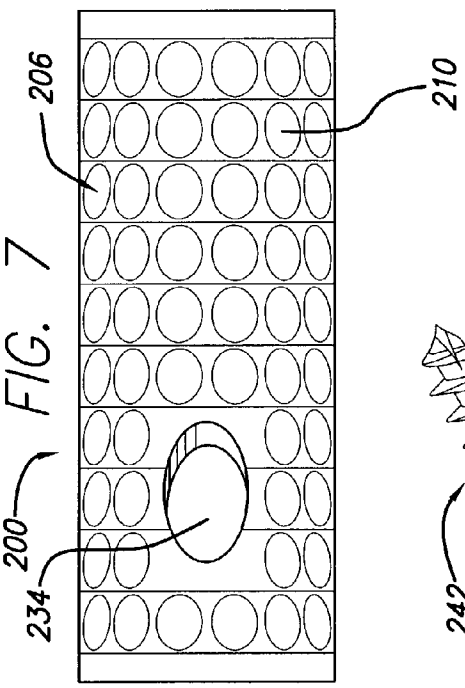

FIG. 7

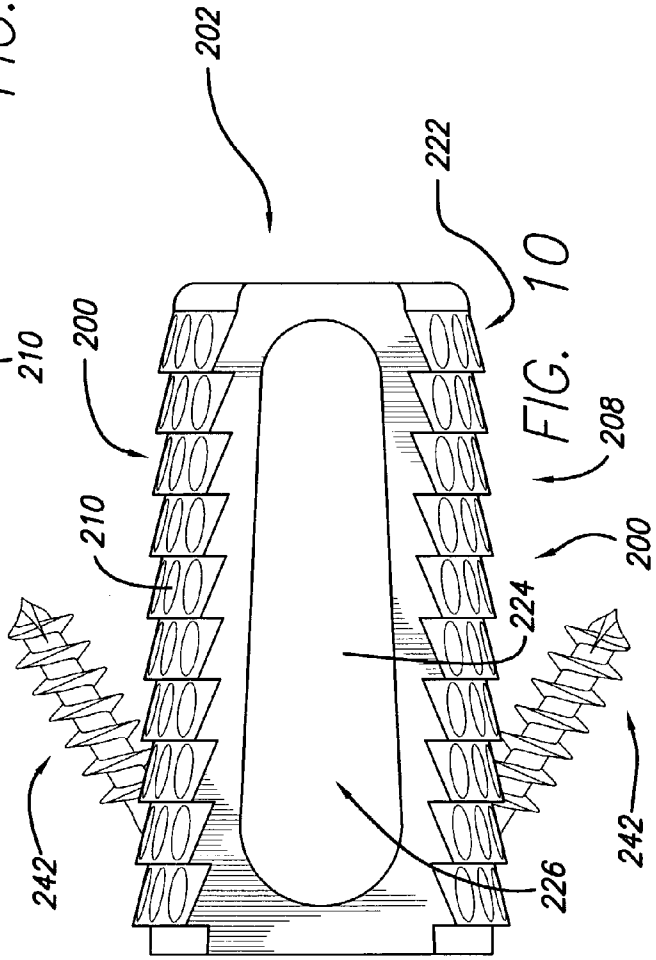

FIG. 10

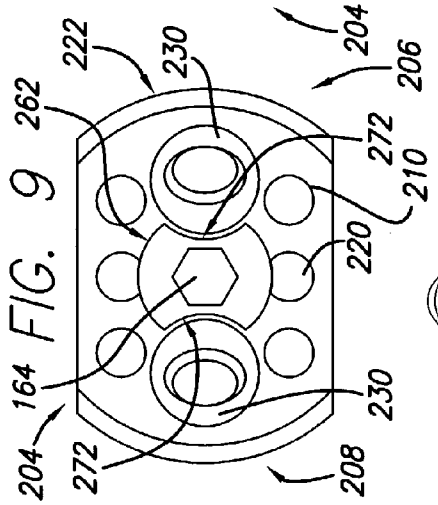

FIG. 9

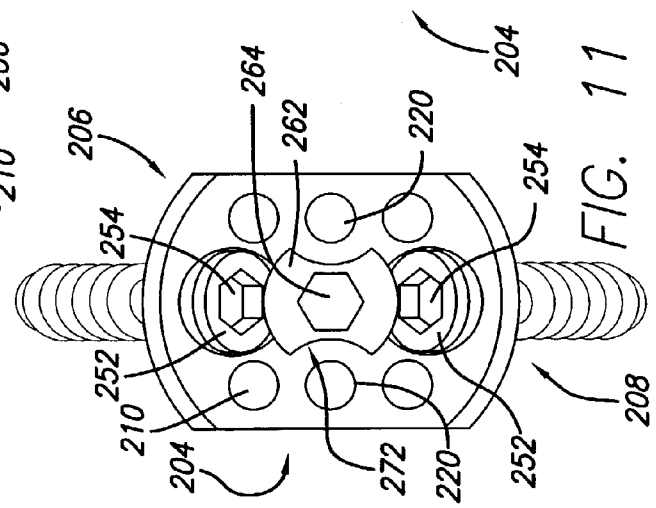

FIG. 11

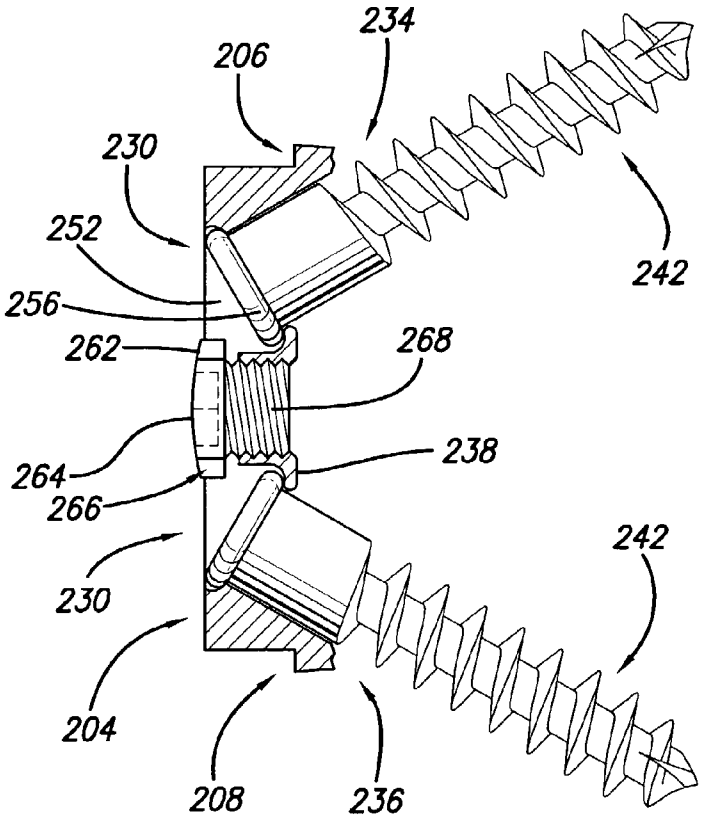
234
206
230
252
256
262
268
242
264
238
266
242
230
204
208
236

FIG. 12

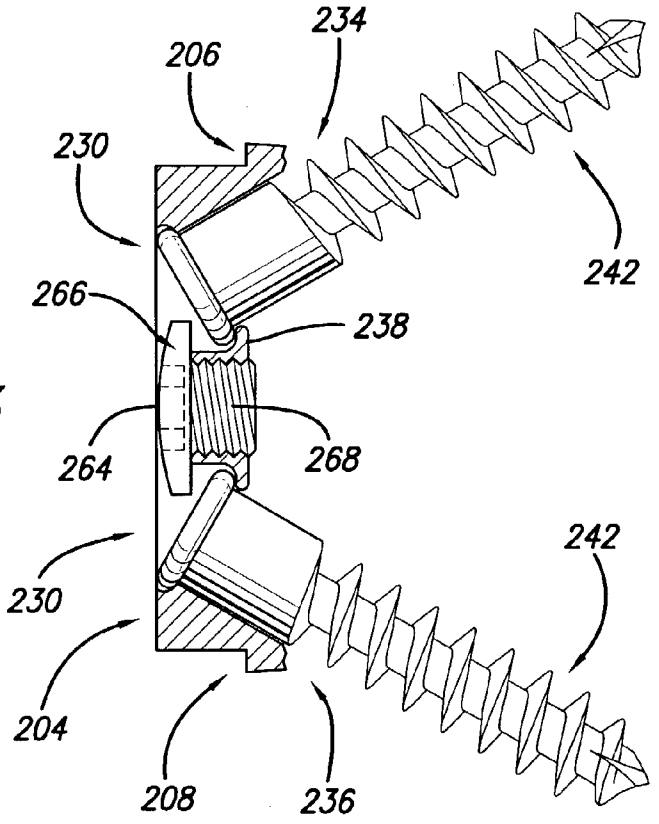
234
206
230
242
266
238
264
268
242
230
204
208
236

FIG. 13

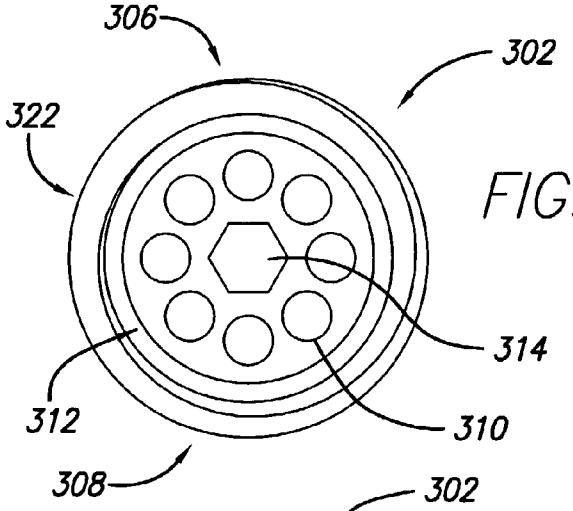

FIG. 16

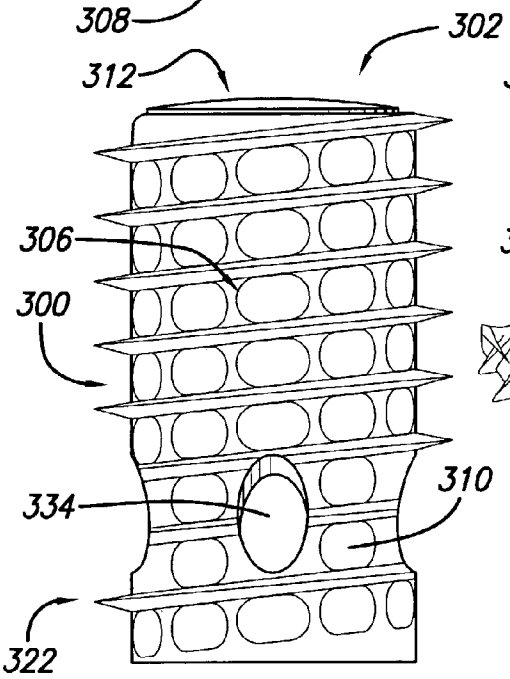

FIG. 14

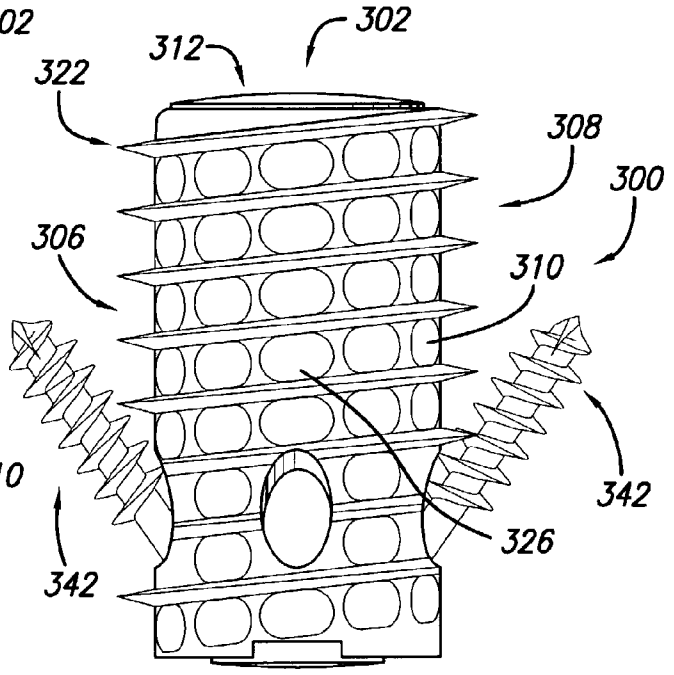

FIG. 15

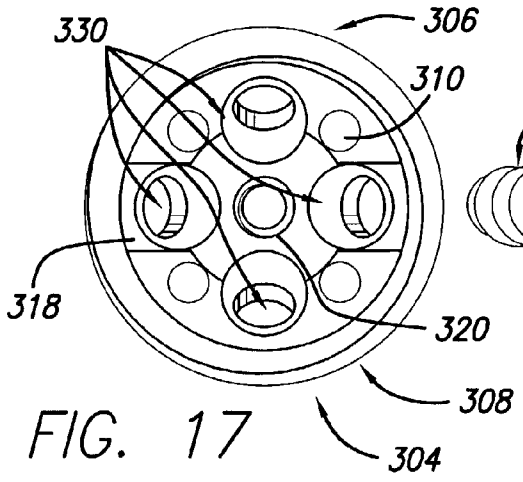

FIG. 17

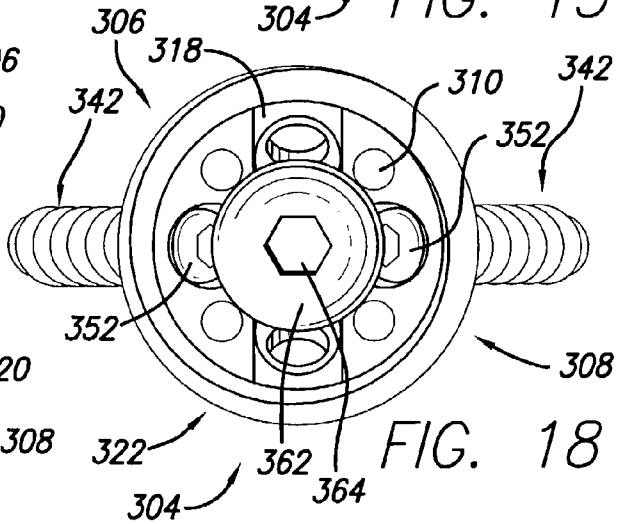

FIG. 18

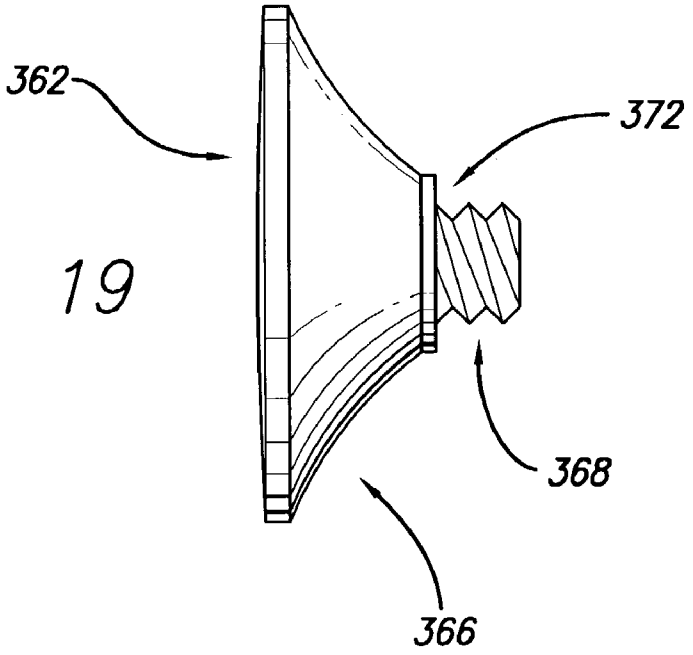
362
372
368
366

FIG. 19

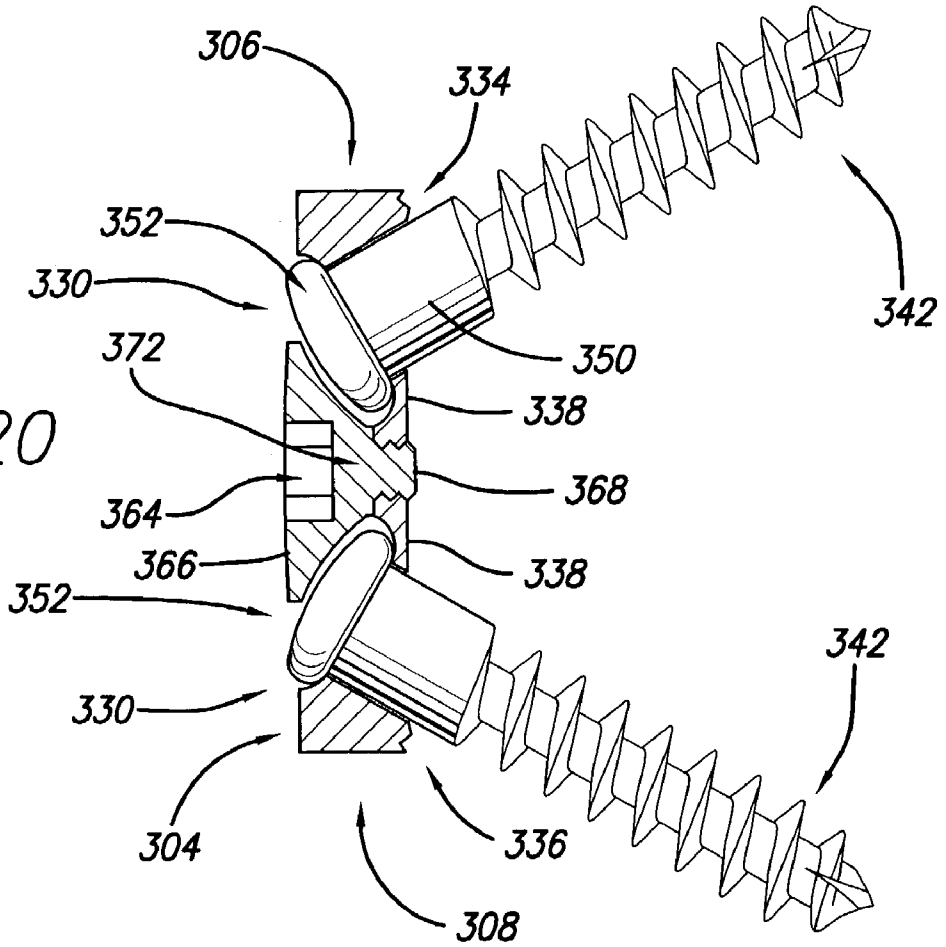
306
334
352
330
342
350
372
338
368
364
366
338
352
342
330
304
336
308

FIG. 20

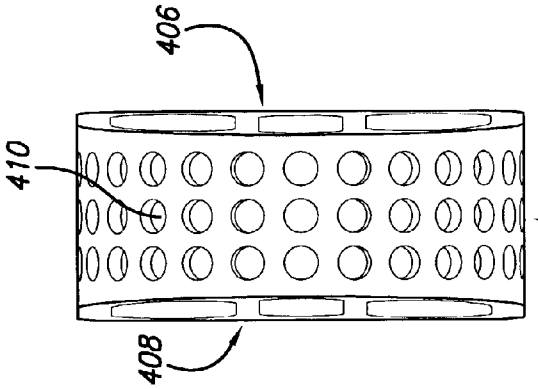

FIG. 22

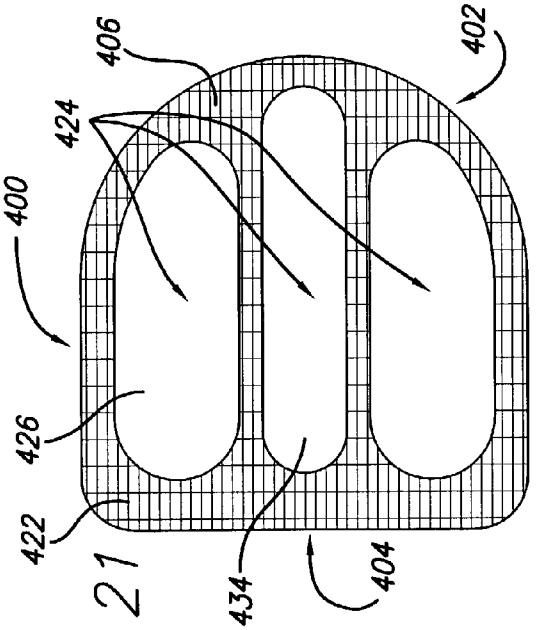

FIG. 21

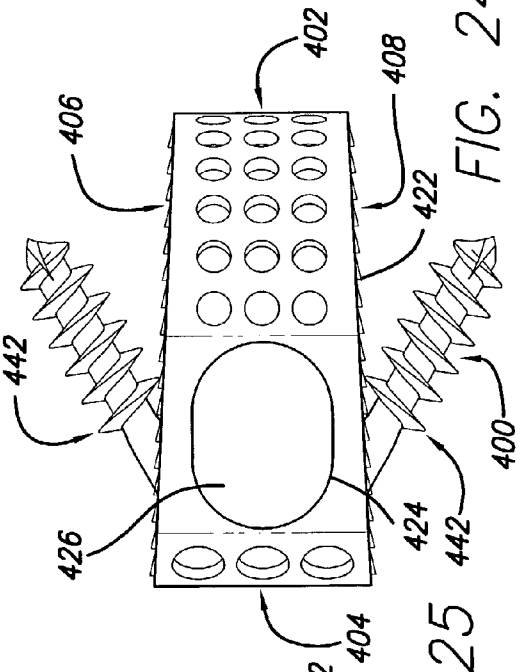

FIG. 24

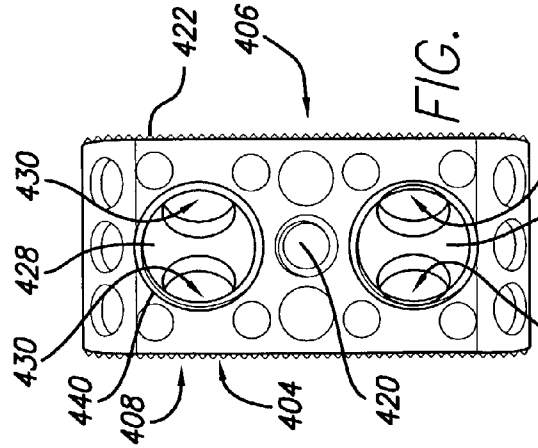

FIG. 23

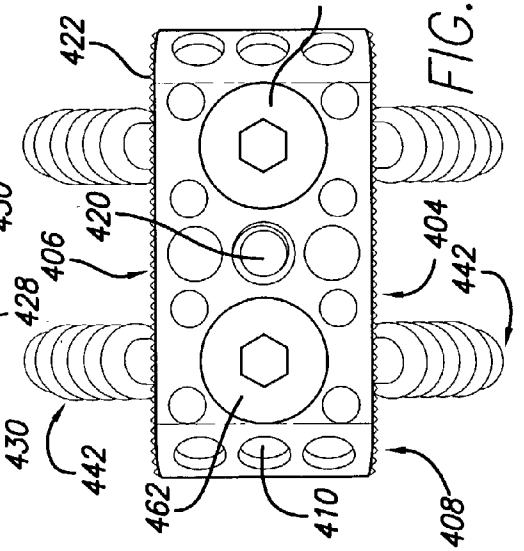

FIG. 25

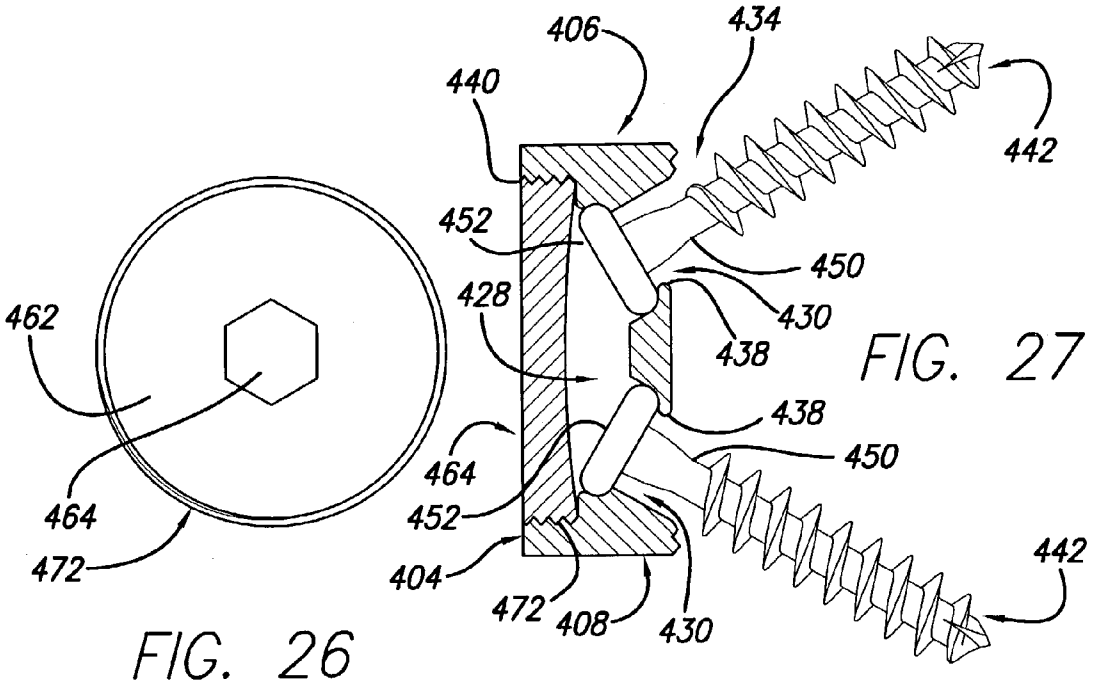

FIG. 26

FIG. 27

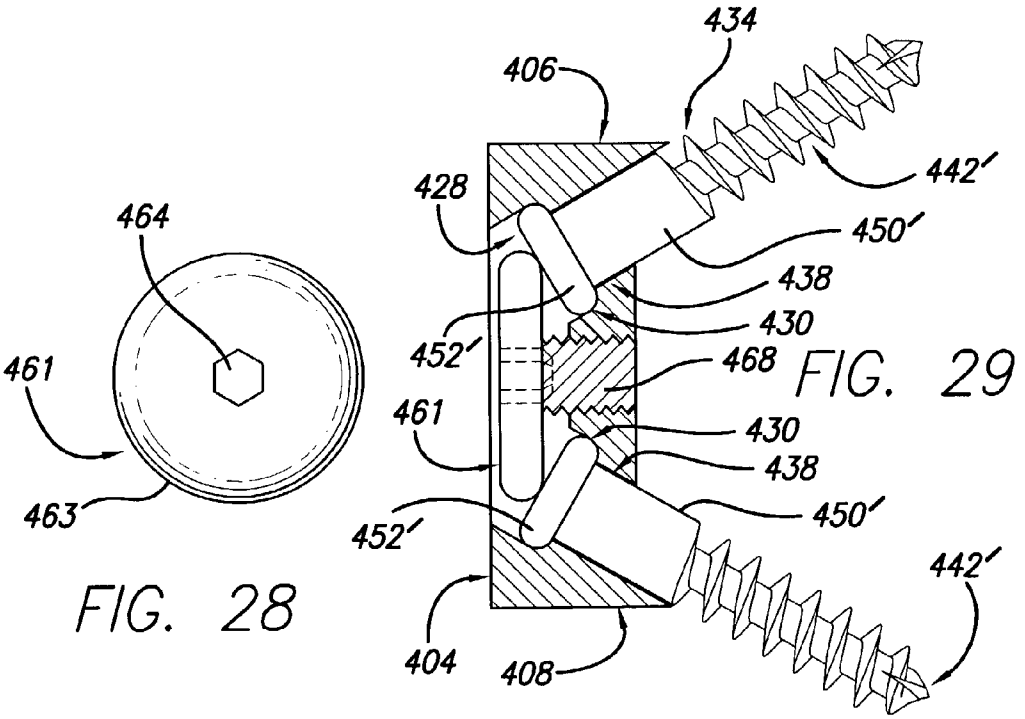

FIG. 28

FIG. 29

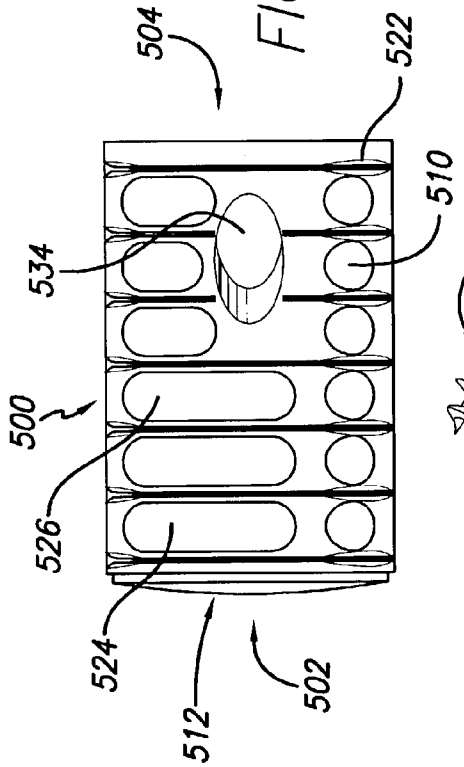

FIG. 30

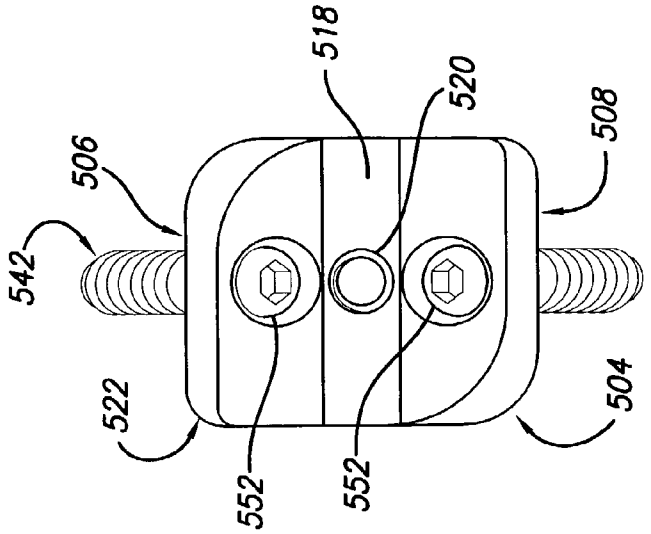

FIG. 32

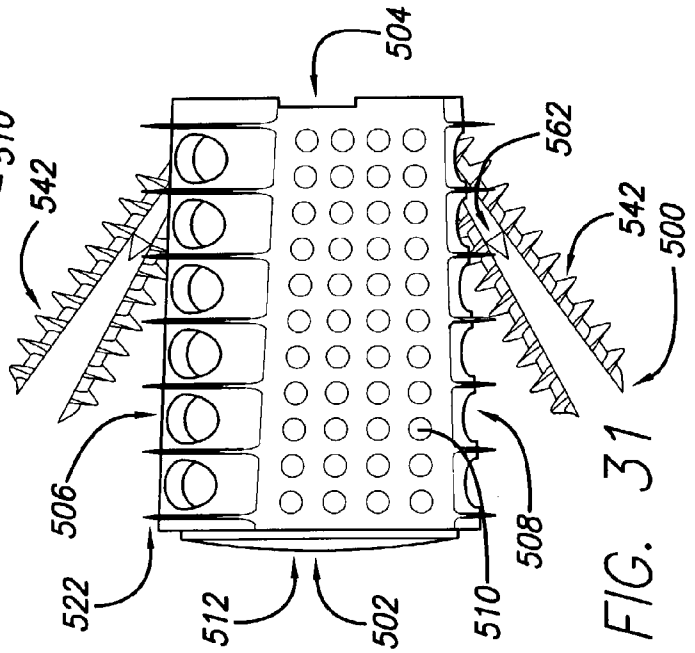

FIG. 31

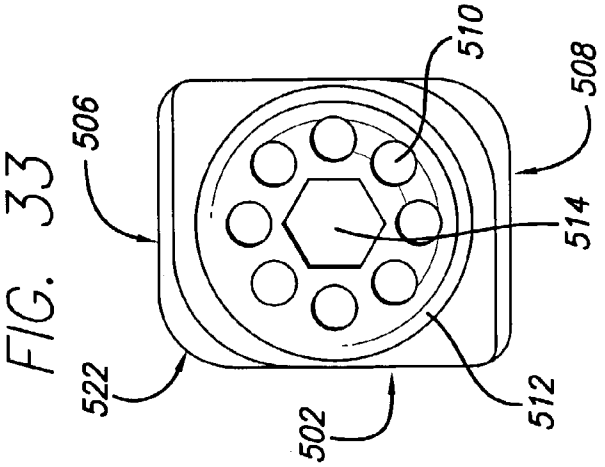

FIG. 33

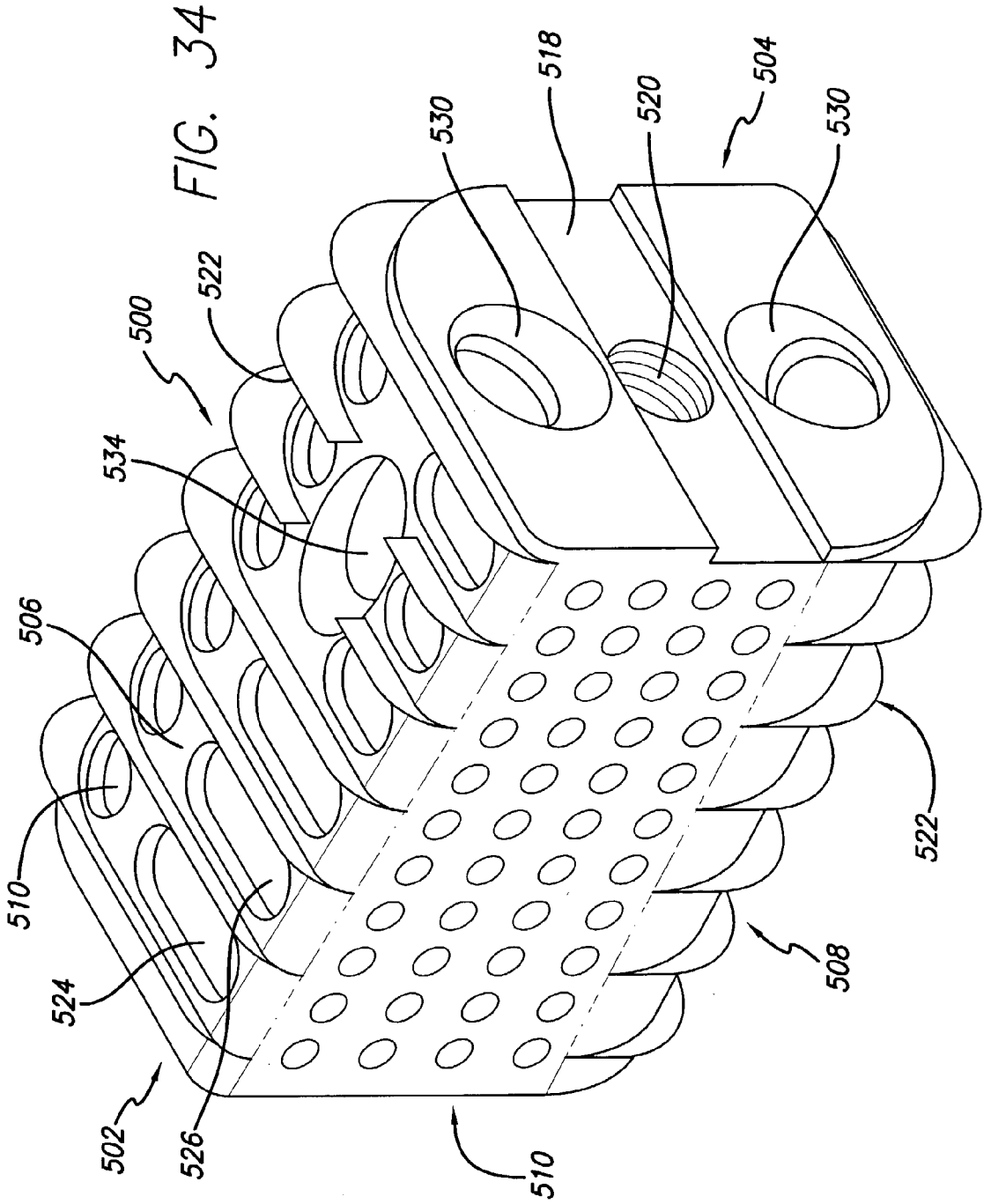

FIG. 34

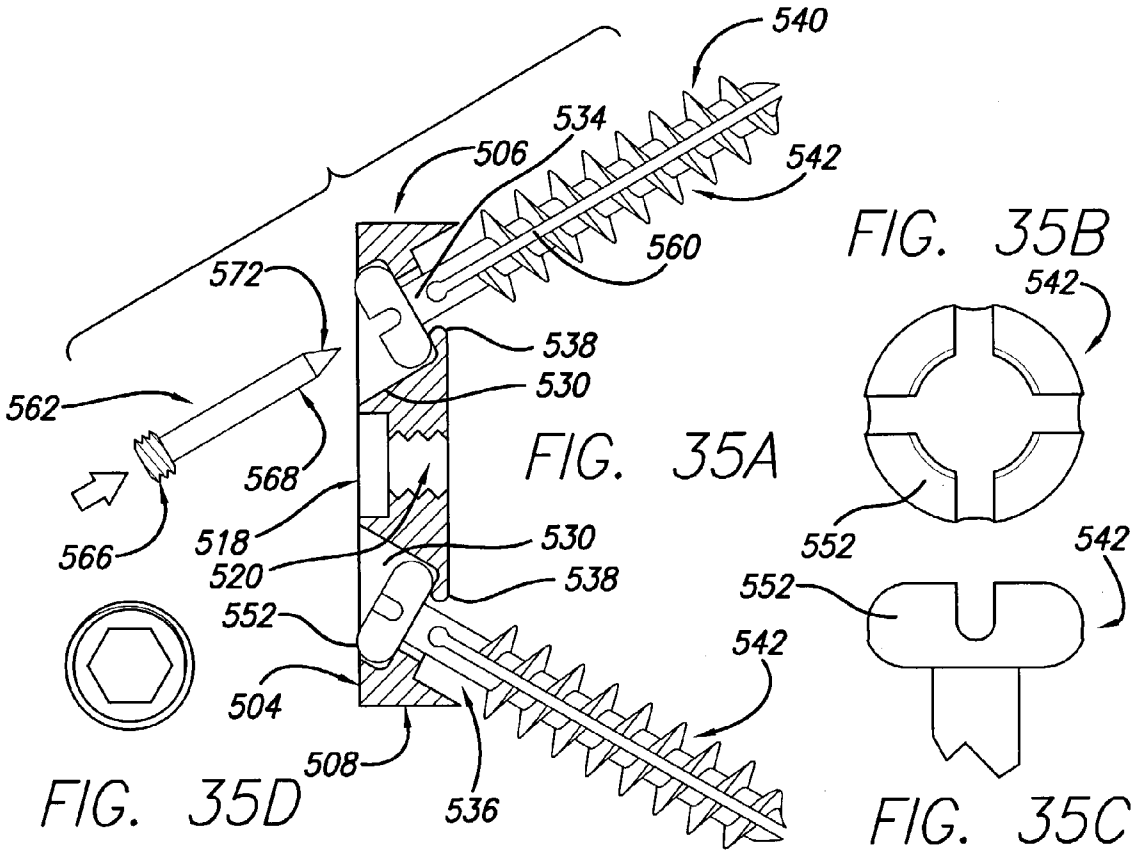

FIG. 35A

FIG. 35B

FIG. 35C

FIG. 35D

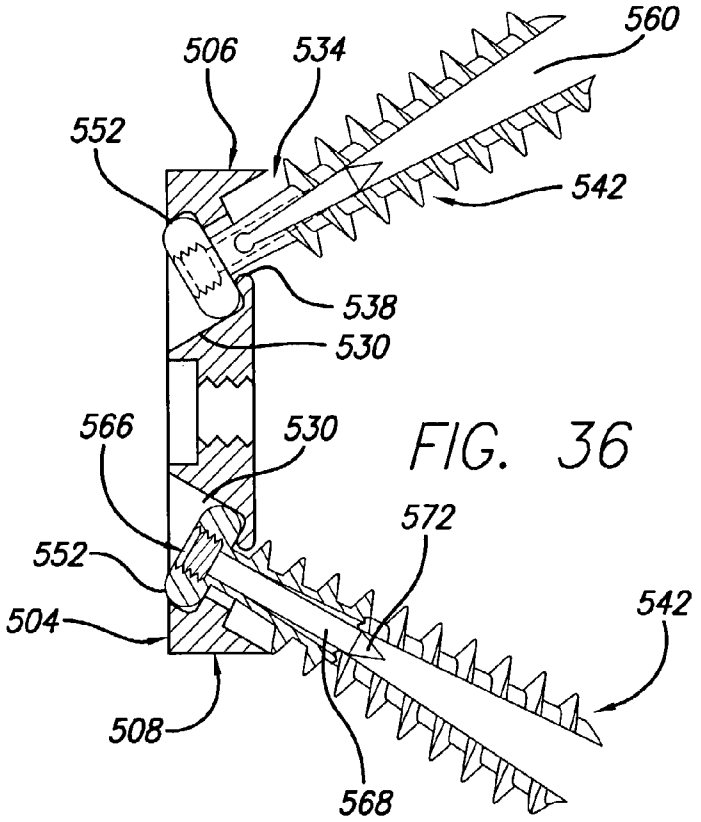

FIG. 36

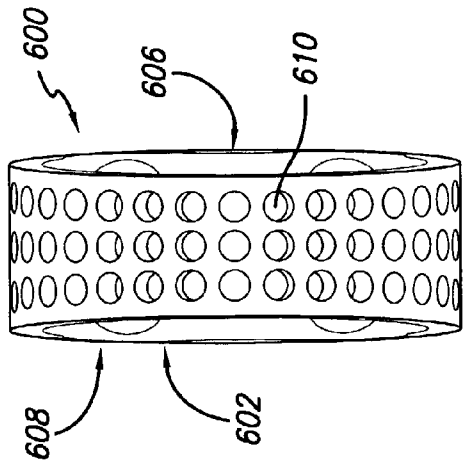

FIG. 39

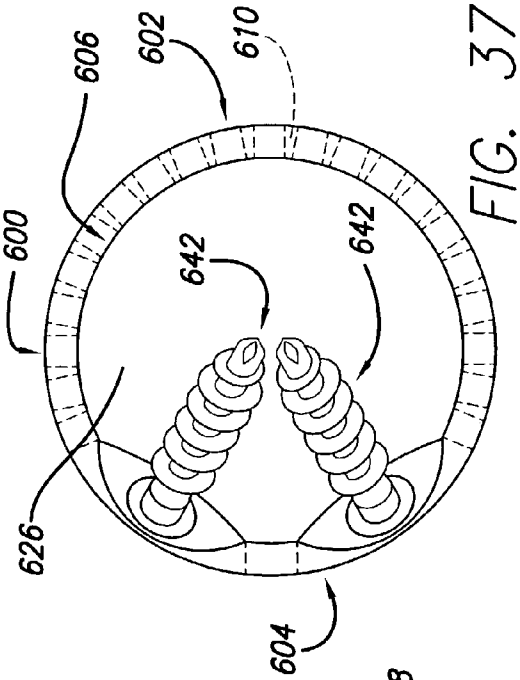

FIG. 37

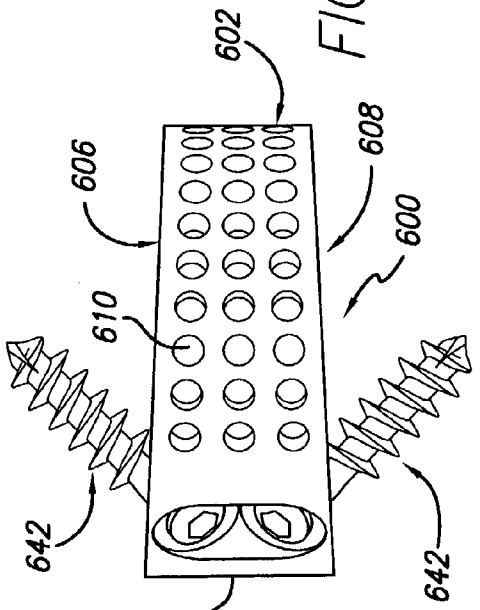

FIG. 38

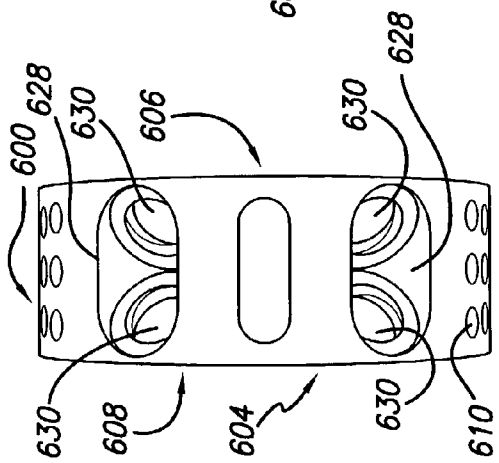

FIG. 40A

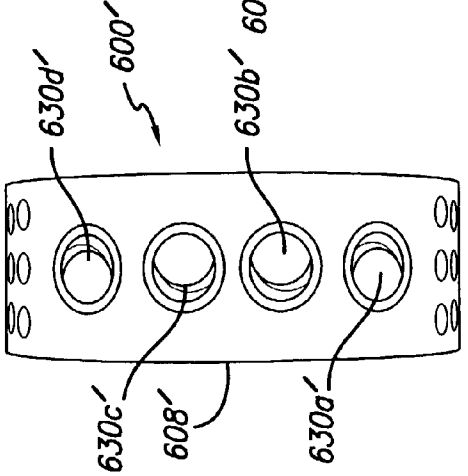

FIG. 40B

FIG. 41

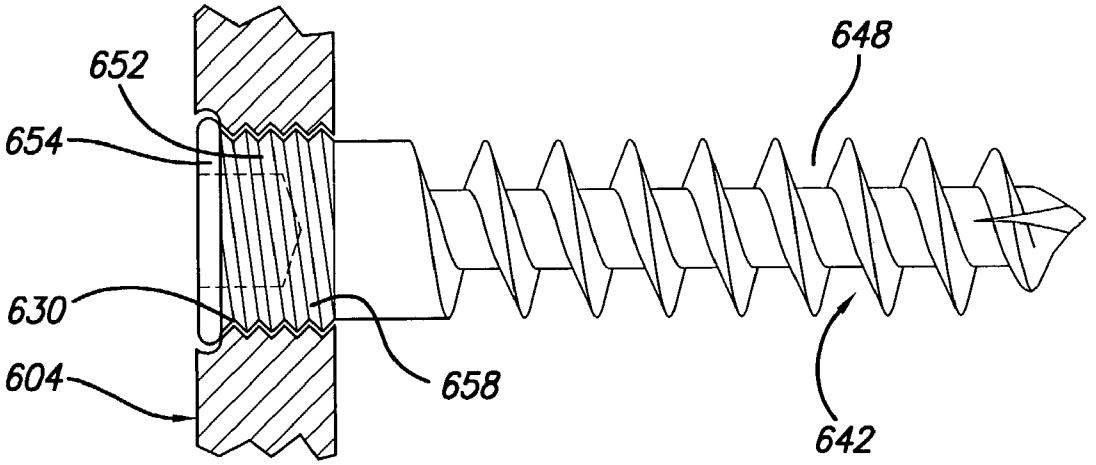

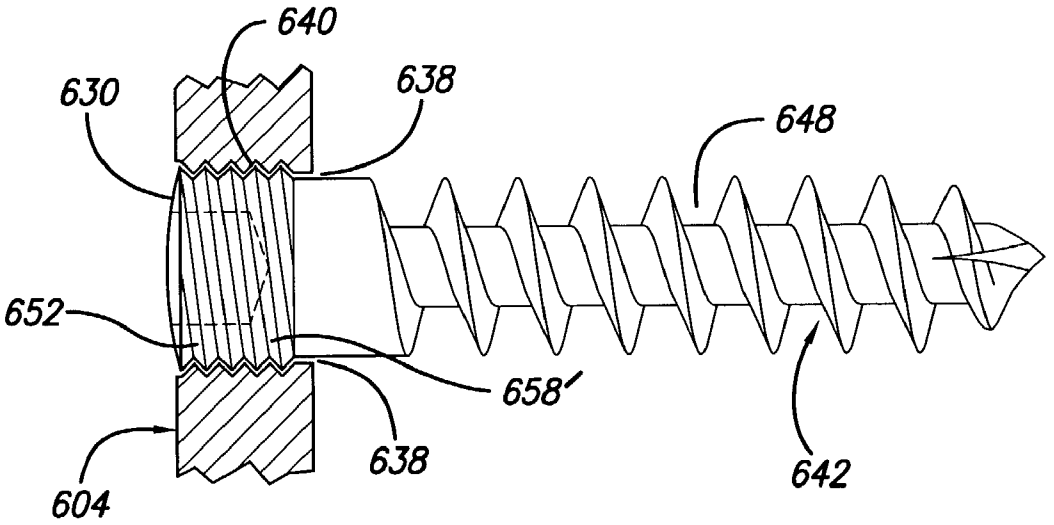

FIG. 42

FIG. 43

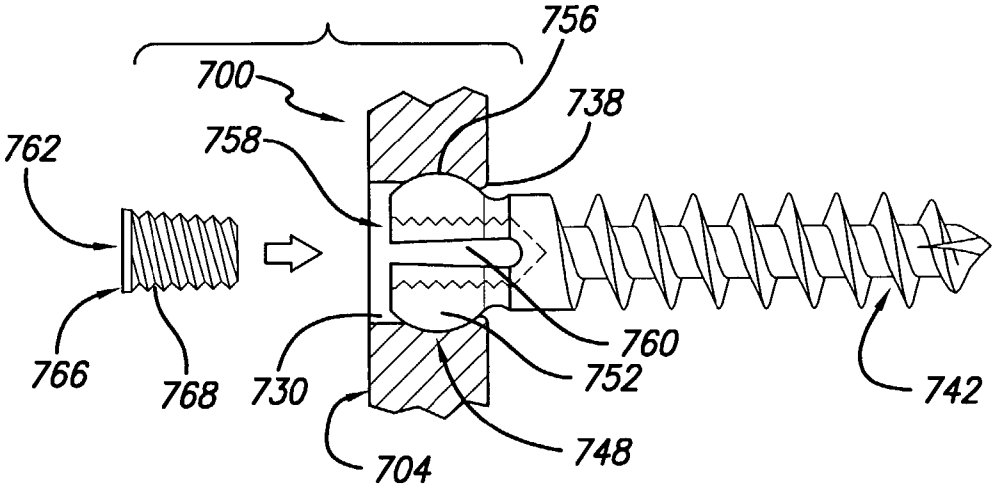

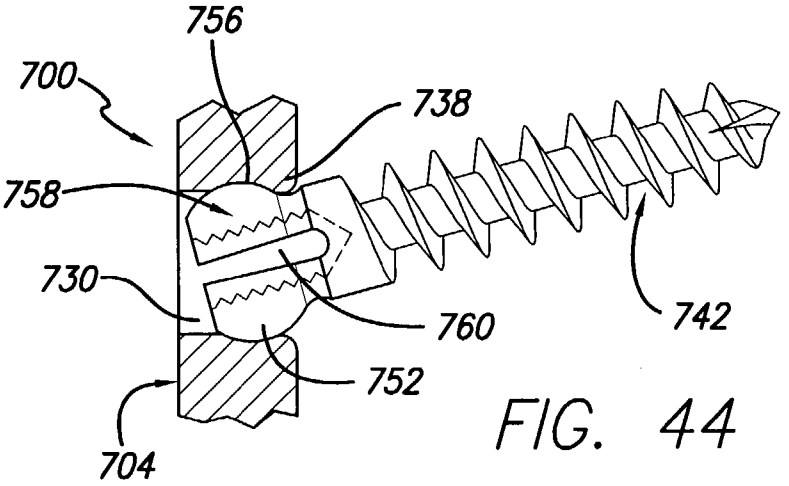

FIG. 44

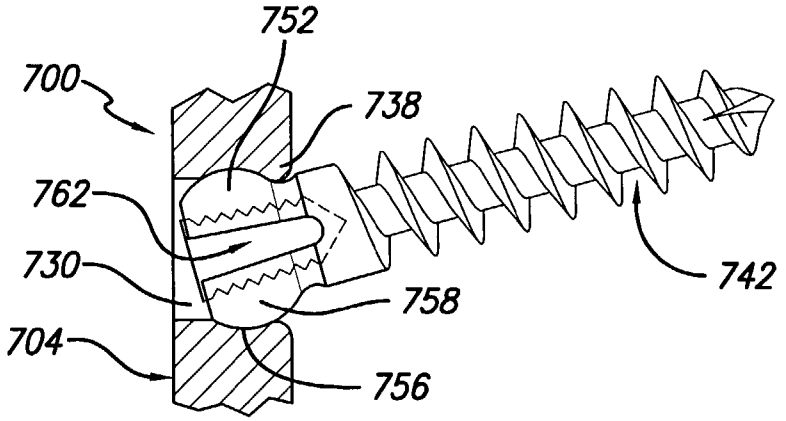

FIG. 45

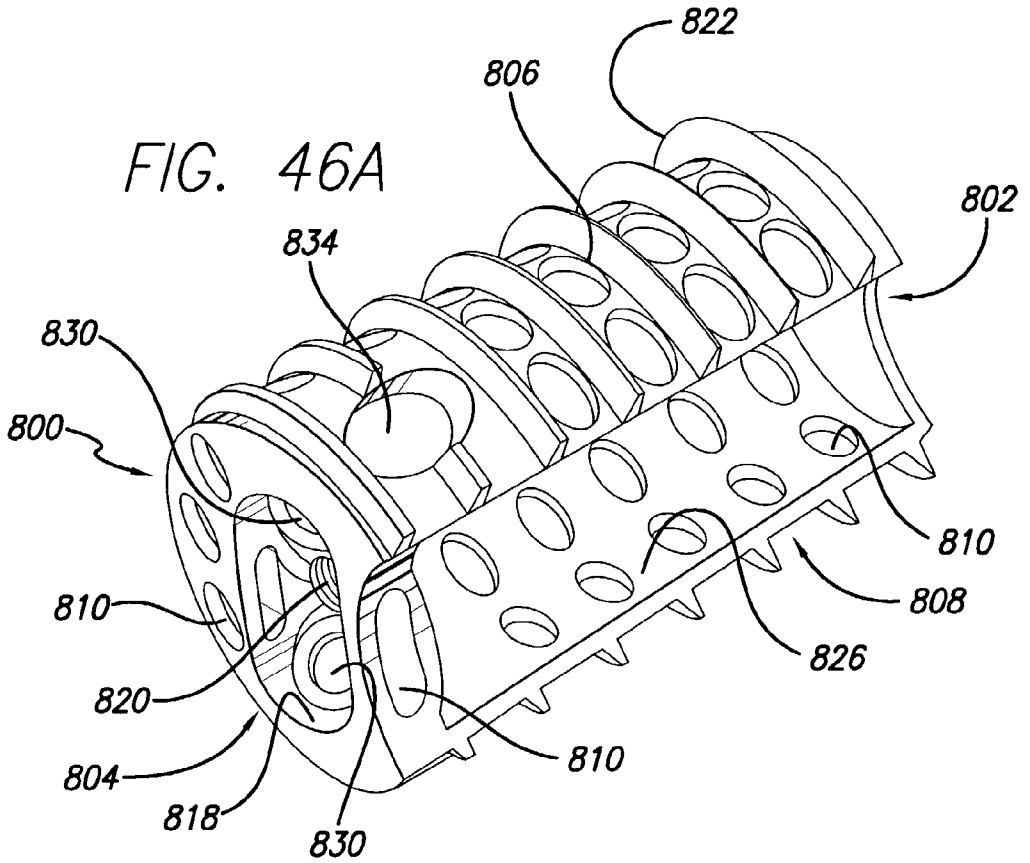

FIG. 46A

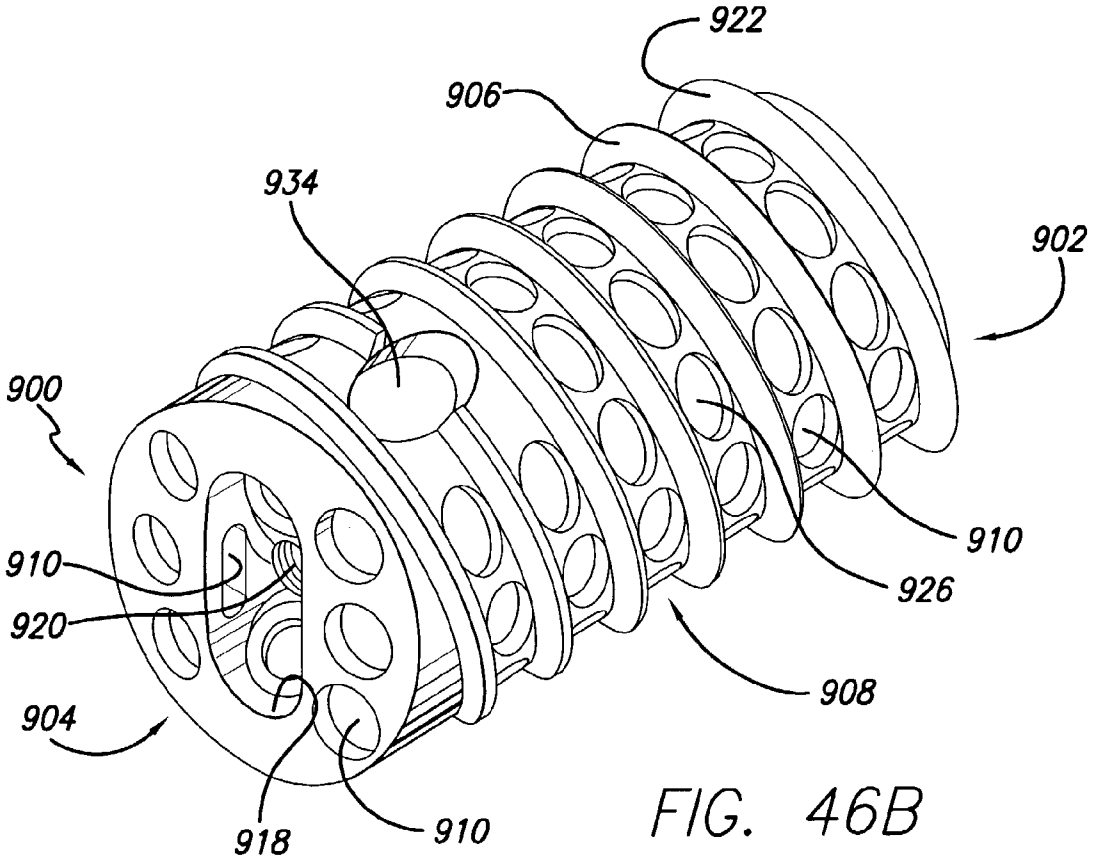

FIG. 46B

FIG. 46C

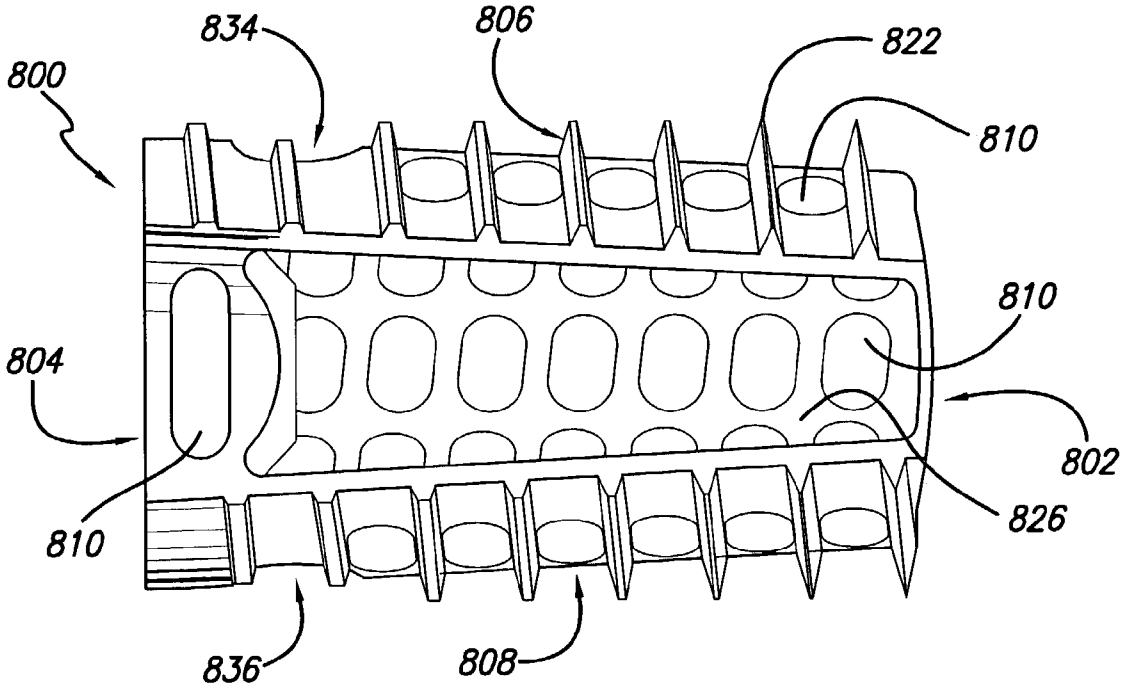

FIG. 46D

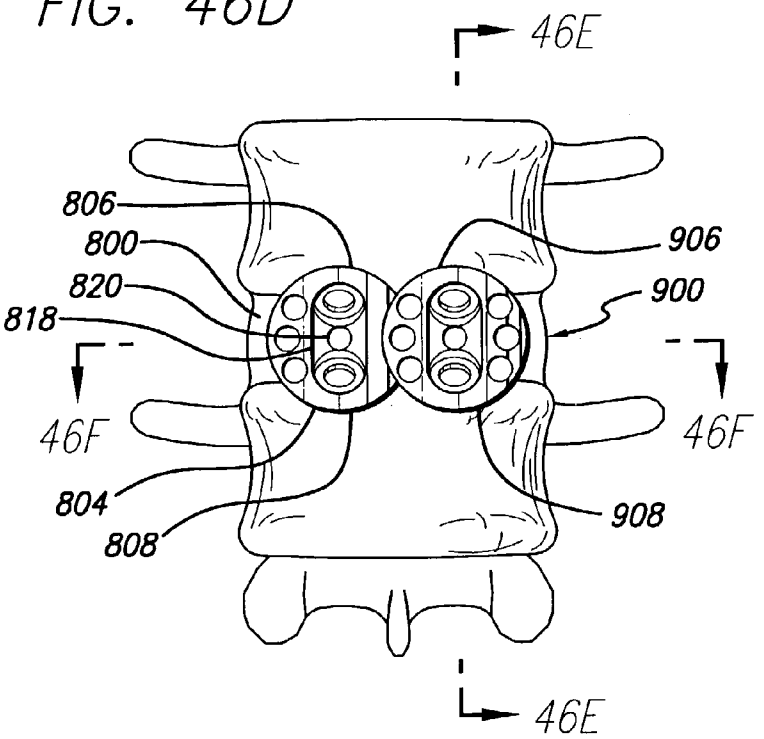

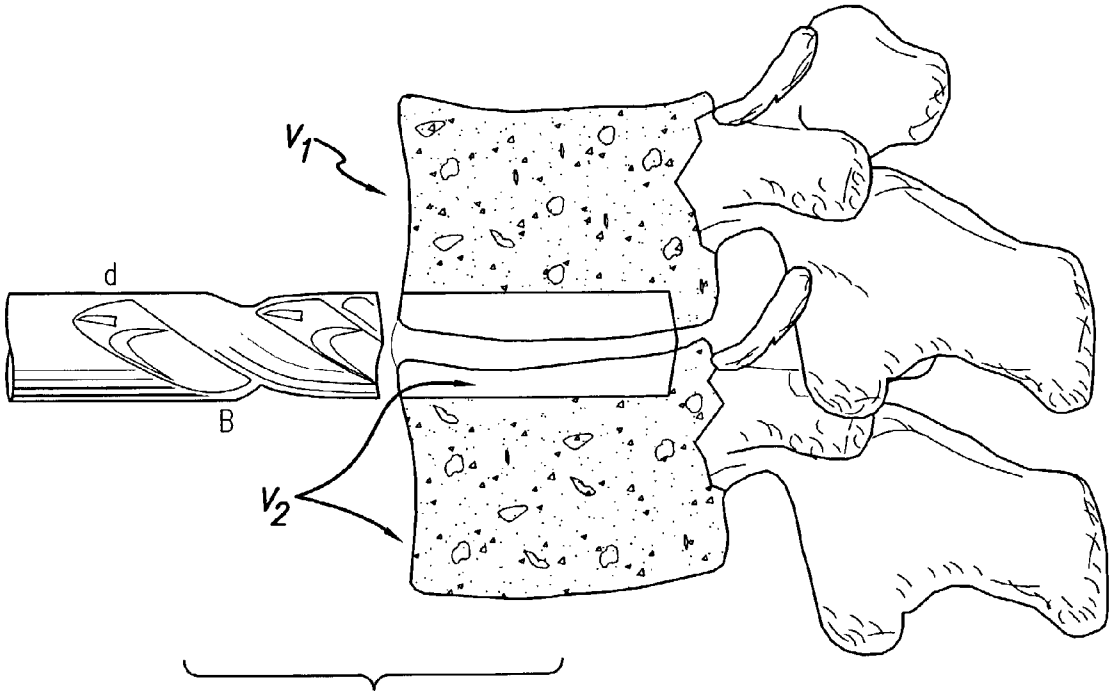

FIG. 46E

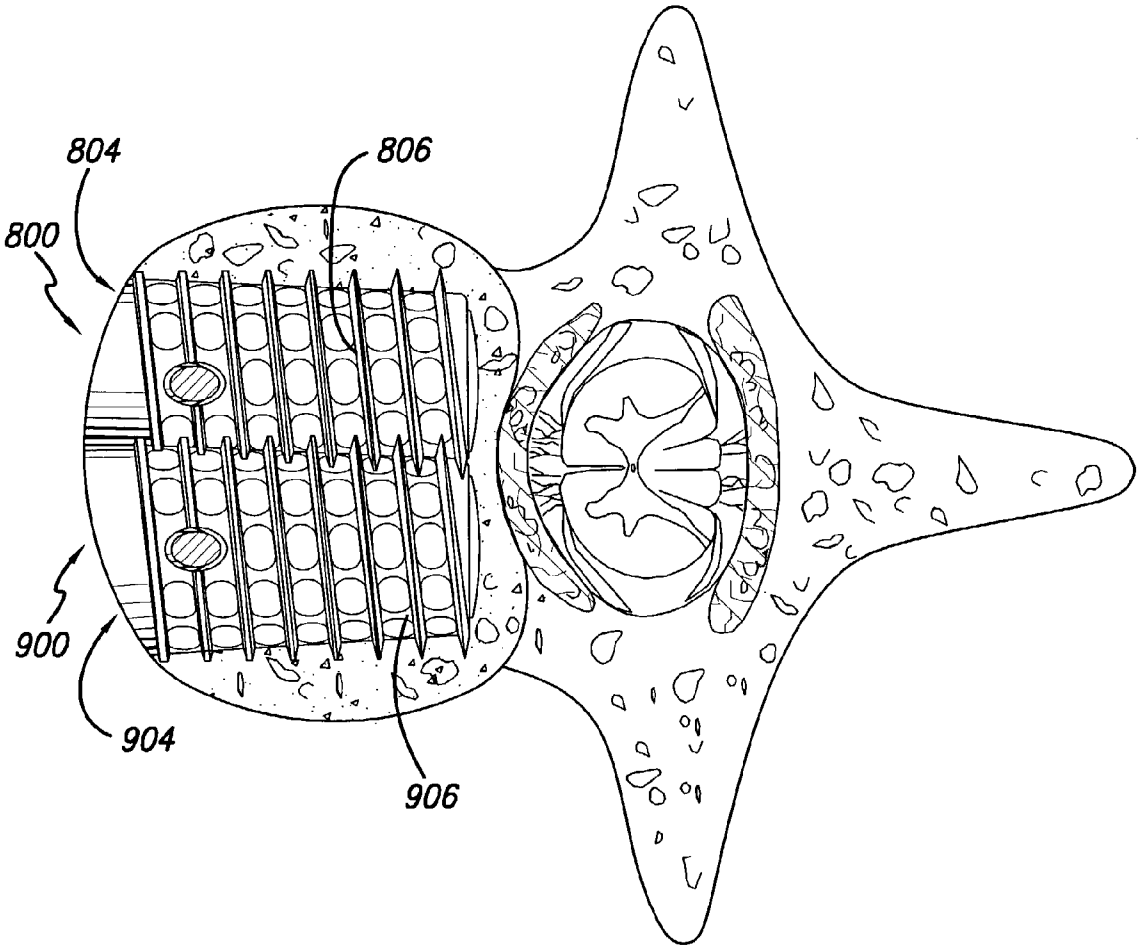

FIG. 46F

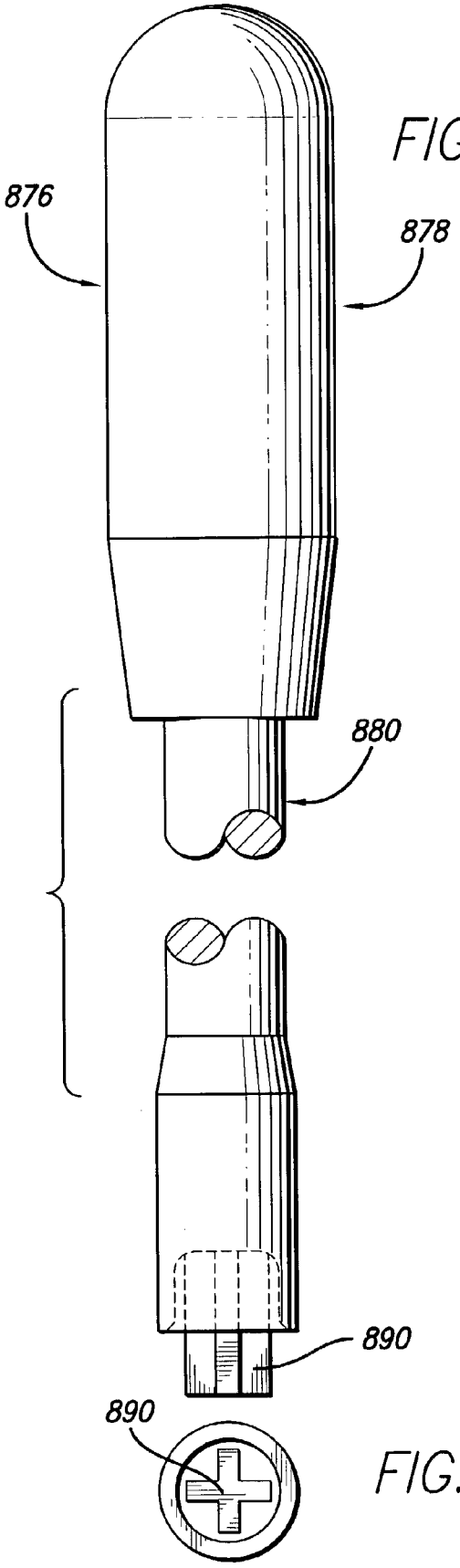

FIG. 47A

FIG. 47B

FIG. 48

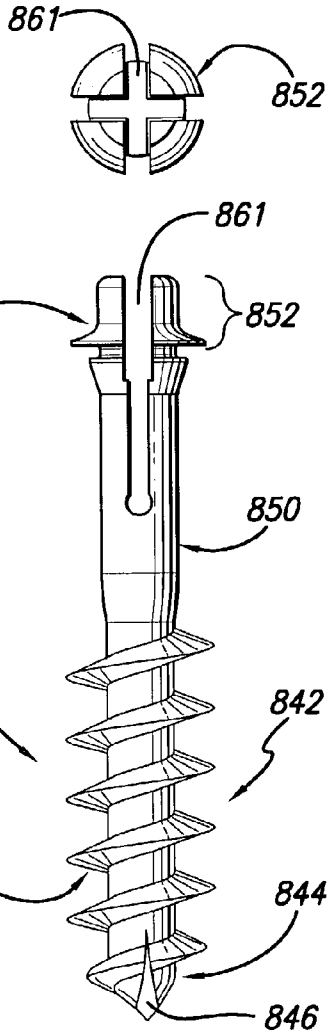

FIG. 49

FIG. 50

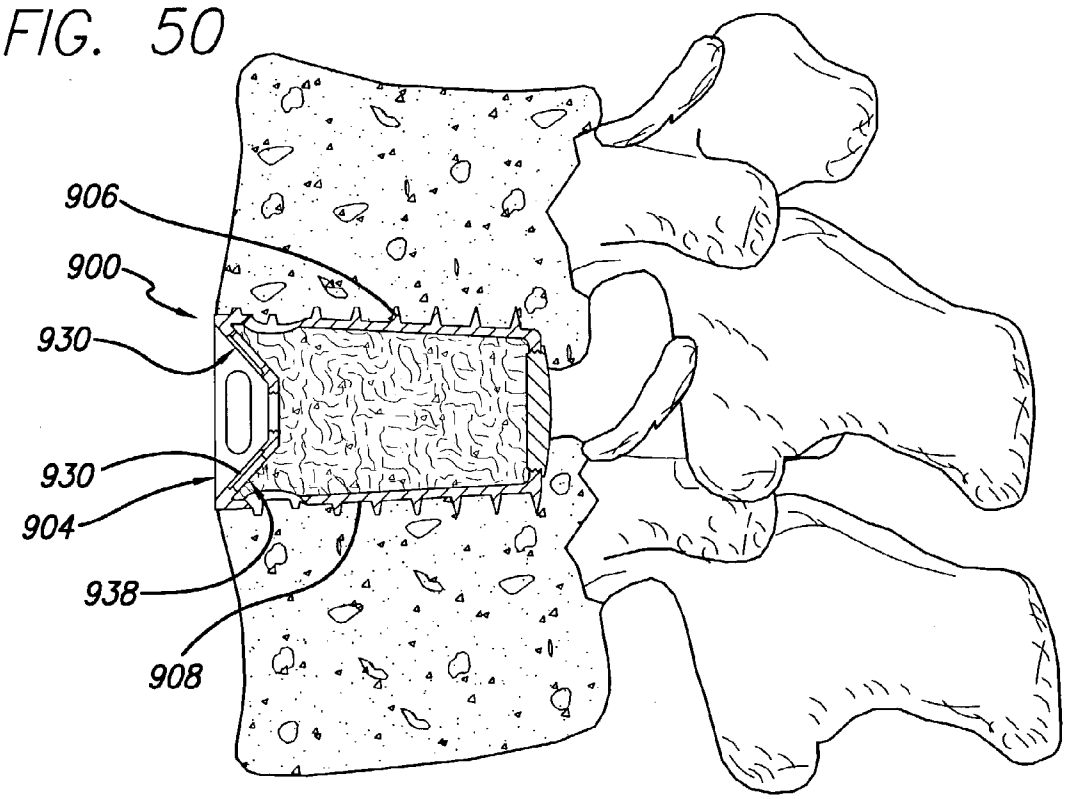

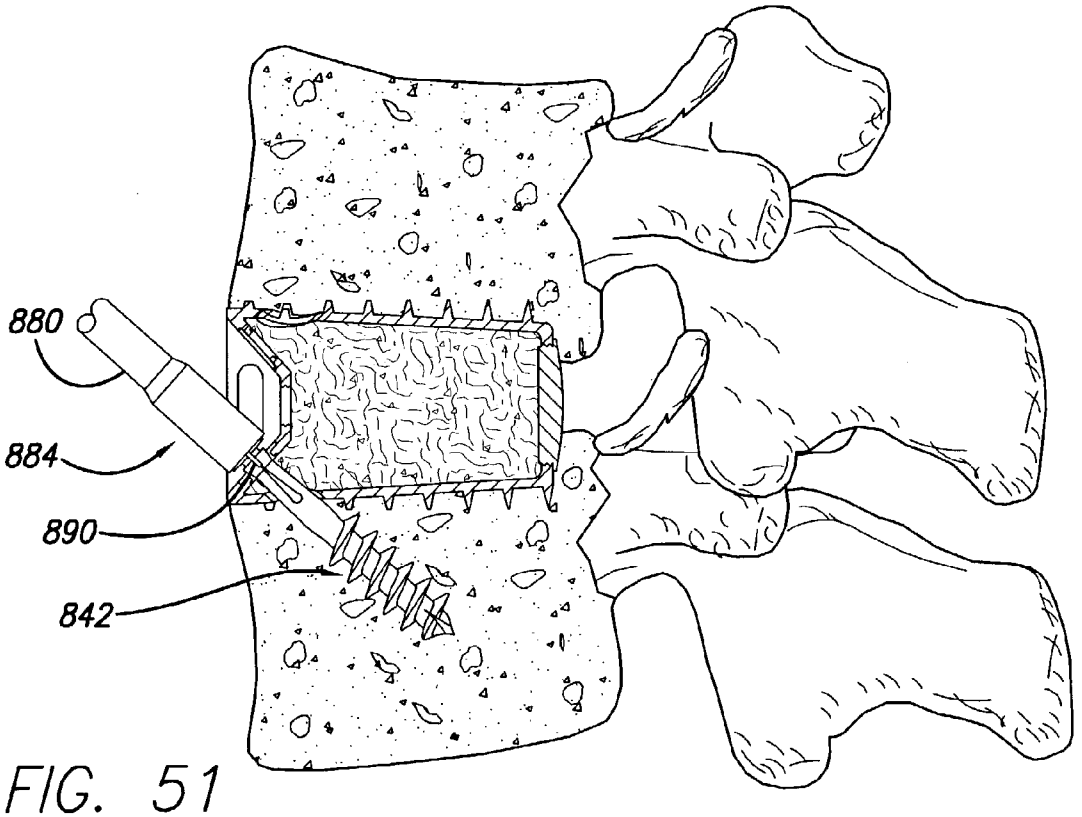

FIG. 51

FIG. 52

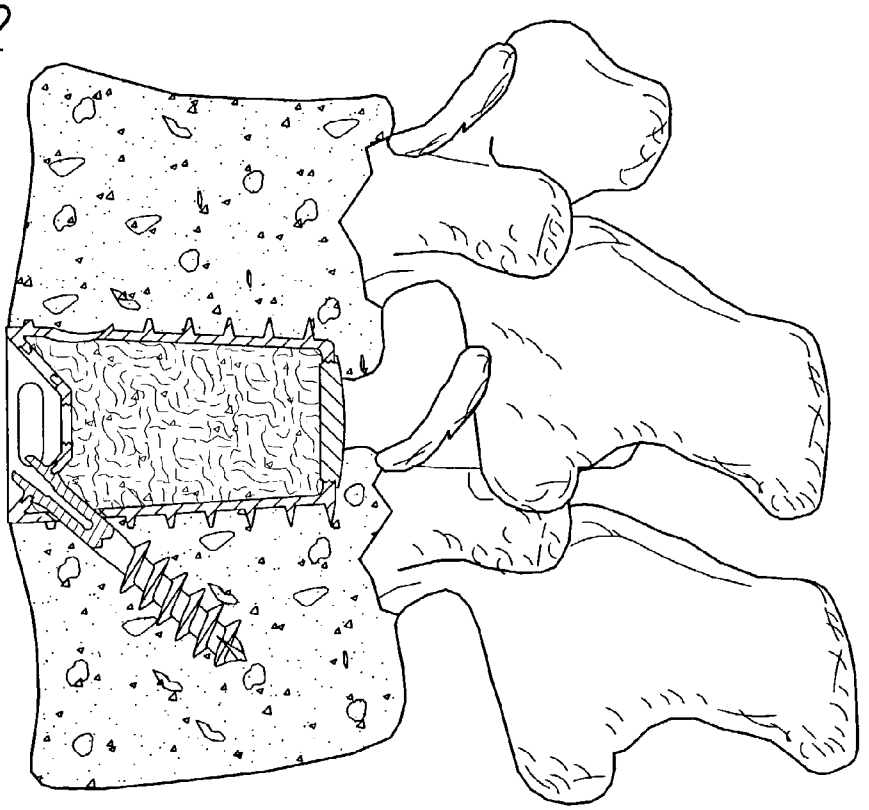

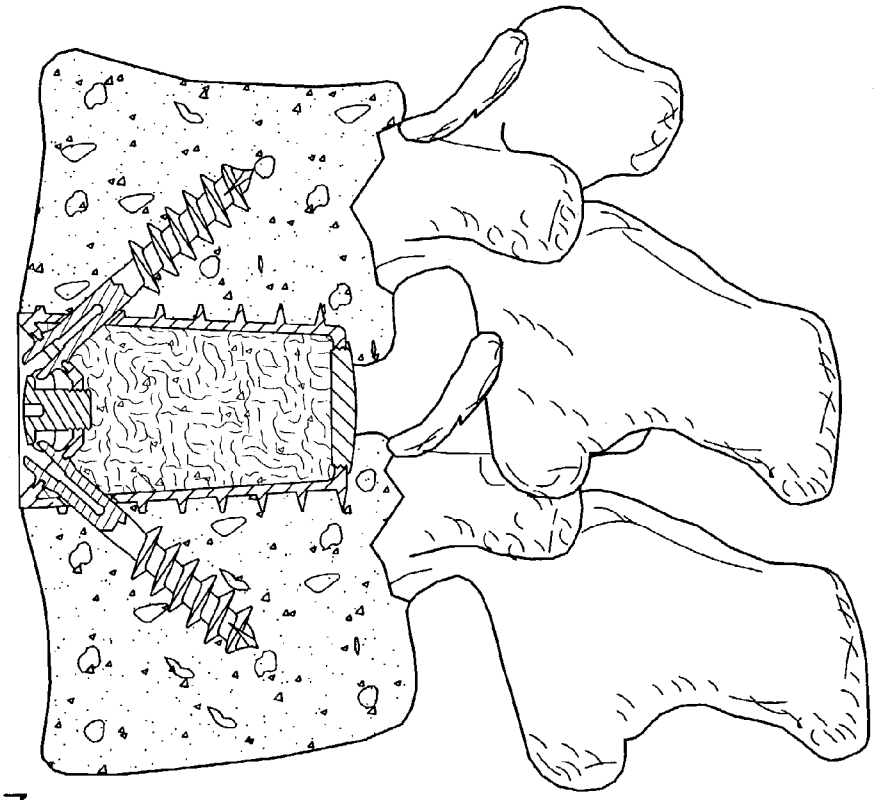

FIG. 53

FIG. 54

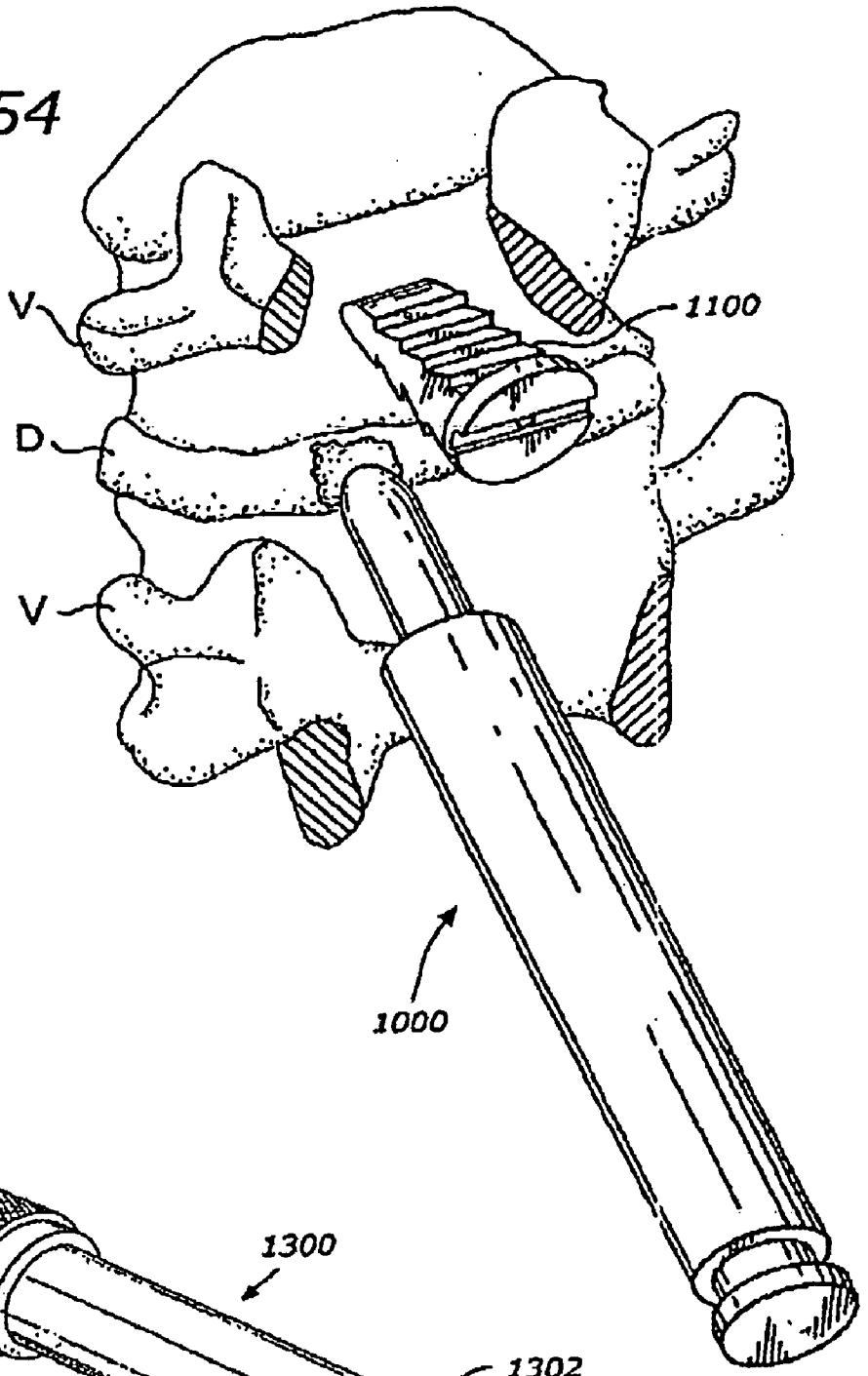

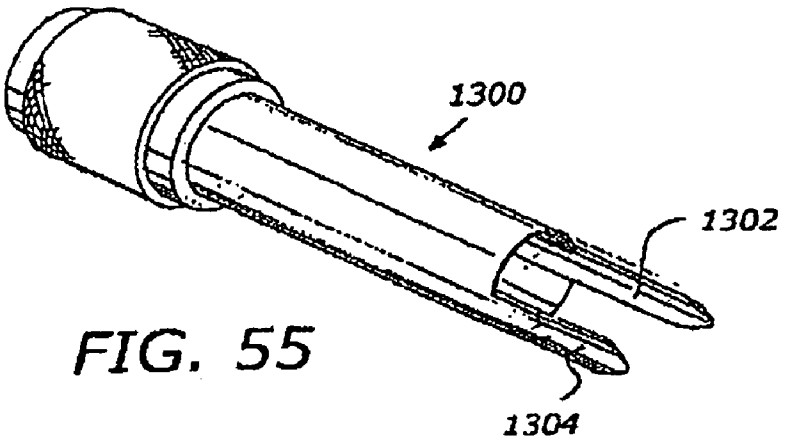

FIG. 55

INTERBODY SPINAL FUSION IMPLANTS WITH SINGLE-LOCK FOR LOCKING OPPOSED SCREWS

RELATED APPLICATION

This application is a divisional of application Ser. No. 09/565,392, filed May 5, 2000, now U.S. Pat. No. 6,558,423, which claims the benefit of application Ser. No. 60/132,665, filed May 5, 1999, and application Ser. No. 60/133,214, filed May 7, 1999, all of which are incorporated by reference herein.

BACKGROUND

1. Field of the Invention

The present invention relates generally to interbody spinal fusion implants. Implants, artificial or natural, are placed at least in part within a disc space and in contact with each of the vertebral bodies adjacent that disc space for spacing apart and aligning those vertebral bodies and for allowing for the growth of bone in continuity from vertebral body to adjacent vertebral body through said implant.

2. Description of the Related Art

Some of the degenerative conditions that affect the spine may be so severe as to require surgical intervention. For example, a disc herniation may compress the spinal cord and/or nerve roots and cause pain, loss of function, and even complete paralysis of the legs with loss of bowel and bladder control. The correct treatment for such conditions is the removal of the offending discal tissue.

Sometimes, for a variety of reasons including the removal of disc material, the spine may become unstable (too much motion) at any given level. Historically, this has been treated by fusion, the joining together permanently of the unstable vertebrae via a bridge of bone so as to eliminate all motion along that portion of the spine.

To achieve fusion, bone or bone like substances are applied between two (or more) separate and distinct bones to induce bony bridging therebetween. When such procedures are successfully performed between vertebral bodies, an interbody fusion results. The shared bone in the area previously occupied by an intervertebral disc is referred to as an interbody fusion.

When a spinal surgeon seeks to perform an interbody fusion, the spine may be accessed from a variety of directions. If the surgeon elects to approach the spine anteriorly, this generally requires severing and/or removing substantial portions of the anterior longitudinal ligament over the operated area. The anterior longitudinal ligament is positioned along the anterior spinal surface and prevents hyperextension of the spine as an individual bends backward. Because the anterior longitudinal ligament covers the anterior spinal surface, the surgeon must cut through this tough ligament to access the disc space therebelow, compromising the stability of the spine. Specifically, the anterior longitudinal ligament is generally lax, except when an individual leans backward, then the ligament acts as a tension band resisting elongation. If the anterior longitudinal ligament is damaged, there is no check on that spinal movement and the vertebral bodies may detrimentally angulate.

Without a functional anterior longitudinal ligament, the patient may damage an implant(s) placed into a disc space to facilitate interbody fusion of the adjacent vertebral bodies. The implant may crush into or erode into, the adjacent vertebral bodies as the disc space opens anteriorly and crushes down posteriorly when the patient bends backwards.

The vertebrae may rock together posteriorly and open anteriorly, thus dislodging the implant. Accordingly, in at least any spinal surgery requiring access to the disc space through the anterior longitudinal ligament, there is a need to functionally reconstruct the anterior longitudinal ligament to preserve stability about the disc space to be fused. Stability of the spine across the disc space to be fused is beneficial for achieving fusion.

In order to perform anterior interbody spinal fusion, a significant amount of disc material is removed from the interspace to be fused. After removing the disc material, the disc space is filled with an implant, which generally includes bone or bone in combination with a reinforcing structure, such as an artificial (other than bone) interbody spinal fusion implant. Because of the forces and motions occurring through the spine, it is not uncommon for such implants to dislodge, thereby causing a failure of surgery and possibly warranting further surgery to correct the problem and to again attempt interbody fusion.

Metal hardware outside the disc space affixed anteriorly to the vertebral bodies adjacent the disc space to be fused is useful to ensure the stability of the spine during the fusion period. Those skilled in the art have shown great reluctance to utilize such hardware because of the potential for the hardware to impinge on vital body structures, such as the aorta, vena cava, or great iliac vessels. The rupture of any of these body structures could cause sudden death. A rupture may occur late after surgery due to the pulsing of an artery against the metal hardware resulting in the eventual erosion and rupture of the artery. Further, metal applied to the outer surfaces of the vertebral bodies may become loose. For example, a screw may back out from repeated bodily movements, leading to the above-described situation.

Therefore, there is a need for an implant that is resistant to dislodgment and functionally substitutes for the anterior longitudinal ligament at the level to be fused, without protruding from the spine.

SUMMARY OF THE INVENTION

According to the present invention, an improved interbody spinal fusion implant is provided. The implant has structure that functionally substitutes for a damaged anterior longitudinal ligament following an anterior implant procedure. The present invention is not limited to functionally reconstructing the anterior longitudinal ligament, however, and also is useful for increasing the stability of the implant, decreasing the mobility of the adjacent vertebrae to be fused together, increasing and more evenly distributing the compressive loads across the fusion site, and mitigating the generation of undesirable localized excessive peak loads; and thus is of great benefit for implants inserted into the disc space posteriorly or laterally as well as anteriorly.

Existing interbody spinal fusion implants do not adequately addresses the above described broad needs or the need to functionally reconstruct the anterior longitudinal ligament, which to be useful must be done in a way that can assure the safety of the great blood vessels. The present teachings provide the structure by which implants may be constructed or existing implants may be modified to take advantage of the improvements of the present invention.

Implants that may be modified to incorporate the present teaching are those interbody implants adapted for placement within a disc space of the human spine between adjacent vertebral bodies, which implants have surfaces for contacting each of the adjacent vertebral bodies and structure therethrough, such as opening(s), to allow for the growth of

bone from vertebra to vertebra through the implant. Such implants, inter alia, include generally rectangular implants such as disclosed in U.S. Pat. No. 5,776,199 to Michelson; lordotic interbody spinal fusion implants such as disclosed in U.S. Pat. No. 5,609,635 to Michelson; threaded cylindrical spinal implants such as disclosed in U.S. Pat. No. 5,860,973 to Michelson; thin-walled, perforated, threaded, hollow cylindrical implants such as disclosed in U.S. Pat. No. 5,015,247 to Michelson; and thin-walled, multiperforated partially cylindrical and cylindrical implants such as disclosed in U.S. Pat. No. 5,785,710 to Michelson. U.S. Pat. Nos. 5,776,199; 5,609,635; 5,860,973; 5,015,247; and 5,785,710 are incorporated herein by reference. The present invention and any or all of its parts may be constructed out of any material appropriate for the described purpose including, but not limited to, cortical bone, surgical quality metals, ceramics, bioresorbable and non-resorbable plastics and composites.

BRIEF DESCRIPTION OF THE DRAWINGS

FIG. **1** is a top plan view of a first embodiment of the implant of the present invention.

FIG. **2** is a trailing end view of the implant of FIG. **1**.

FIG. **3** is a leading end view of the implant of FIG. **1**.

FIG. **4** is a side elevational view of the implant of FIG. **1**, including opposed bone screws.

FIG. **5** is a trailing end view of the implant of FIG. **4** with screws and screw locks installed.

FIG. **6**A is a side elevational view in partial cross section of a screw-lock driver.

FIG. **6**B is a side elevational view in partial cross section of the distal end of the driver of FIG. **6**A in accordance with its method of use with an implant shown as a portion in cross section, bone screw, and lock in cross section.

FIG. **7** is a top plan view of a second embodiment of an implant in accordance with the present invention.

FIG. **8** is a leading end view of the implant of FIG. **7**.

FIG. **9** is a trailing end view of the implant of FIG. **7**.

FIG. **10** is a side elevational view of the implant of FIG. **7**, including opposed bone screws.

FIG. **11** is a trailing end view of the implant of FIG. **10** with the screws locked.

FIG. **12** is a cross sectional side view of an implant rear wall, with opposed bone screws, and a preinstallable lock in the open position.

FIG. **13** is a cross sectional side view of an implant rear wall, opposed bone screws, and with the locking element of FIG. **12** in the locked position.

FIG. **14** is a top plan view of a third embodiment of an implant in accordance with the present invention.

FIG. **15** is a side elevation view of the implant of FIG. **14** with opposed bone engaging screws and screw lock.

FIG. **16** is a leading end view of the implant of FIG. **14**.

FIG. **17** is a trailing end view of the implant of FIG. **14**.

FIG. **18** is a trailing end view of the implant of FIG. **15** with opposed bone engaging screws and screw lock.

FIG. **19** is a side elevation view of a bone screw lock.

FIG. **20** is a side elevation view in partial cross section through the rear wall of the third embodiment implant with the bone screws and screw lock in place.

FIG. **21** is a top plan view of the fourth embodiment of an implant in accordance with the present invention.

FIG. **22** is a leading end view of the implant of FIG. **21**.

FIG. **23** is a trailing end view of the implant of FIG. **21**.

FIG. **24** is a side elevation view of the fourth embodiment implant with opposed bone engaging screws.

FIG. **25** is a trailing end view of the implant of FIG. **24** with screws and screw locks in place.

FIG. **26** is a top plan view of the screw lock of FIG. **25**.

FIG. **27** is a side elevation view in partial cross section through a portion of the rear wall of the fourth embodiment implant, with opposed bone screws, and lock.

FIG. **28** is a top plan view of an alternative lock.

FIG. **29** is a side elevation view and partial cross section through the rear wall of the fourth embodiment implant with the bone screws and alternative lock of FIG. **28** in place.

FIG. **30** is a top plan view of a fifth embodiment implant in accordance with the present invention.

FIG. **31** is a side elevation view of the implant of FIG. **30**, with opposed locked bone screws and locks in place.

FIG. **32** is a trailing end view of the implant with screws and locks of FIG. **31**.

FIG. **33** is a leading end view of the fifth embodiment implant.

FIG. **34** is a side perspective view of the fifth embodiment implant.

FIG. **35**A is a side elevation view and partial cross section through the rear wall of the fifth embodiment implant, with bone screws, and a lock positioned for engagement with a bone screw.

FIG. **35**B is a top plan view of a bone screw.

FIG. **35**C is a side elevation view of a bone screw head.

FIG. **35**D is a top plan view of a screw lock.

FIG. **36** is a side elevation view and partial cross section through the rear wall of the fifth embodiment implant with locks engaged with the bone screws.

FIG. **37** is a top plan view of a sixth embodiment of an implant in accordance with the present invention, with bone screws.

FIG. **38** is a side elevation view of the sixth embodiment implant with screws of FIG. **37**.

FIG. **39** is a leading end view of the sixth embodiment implant.

FIG. **40**A is a trailing end view of the sixth embodiment implant.

FIG. **40**B is a trailing end view of an alternative sixth embodiment implant.

FIG. **41** is a detailed side elevation view in partial cross section of a portion of the rear of the sixth embodiment implant and the bone screw.

FIG. **42** is a detailed side elevation view in partial cross section of the rear wall of the sixth embodiment implant and an alternative screw.

FIGS. **43**, **44**, and **45** are side elevation views in partial cross section showing a portion of the rear wall of one of the embodiments of the implants of the present invention and an alternative screw and lock mechanism.

FIG. **46**A is a side perspective side view of an eighth embodiment of an implant of the present invention.

FIG. **46**B is a side perspective view of a ninth embodiment of an implant of the present invention.

FIG. **46**C is a side elevation view of the implant of FIG. **46**A.

FIG. **46**D is a trailing end view of the implants of FIGS. **46**A and **46**B, properly inserted within a spine.

FIG. **46**E is a side elevation view in partial cross section, showing the formation of a generally cylindrical bore across a disc space in a spine.

FIG. **46**F is a top plan view along line **46**F—**46**F of FIG. **46**D.

FIG. **47**A is a side elevation view in partial ghost of a screwdriver for use with the self-locking screw of FIGS. **48** and **49**.

FIG. **47**B is a bottom end view of the distal portion of the driver of FIG. **47**A.

FIG. **48** is a top plan view of the head portion of a self-locking screw of FIG. **49**.

FIG. **49** is a side elevation view of the self-locking screw of FIG. **48**.

FIGS. **50**, **51**, **52**, and **53** are side elevation views in partial cutaway illustrating the method of use of the driver of FIGS. **47**A and **47**B and the self-locking screw of FIG. **49** in relation to the ninth embodiment of the present invention properly inserted in a spine.

FIG. **54** is a perspective view of a spinal segment (two vertebrae and an interposed disc) with a long distractor about to be placed therein.

FIG. **55** is an embodiment of a sleeve.

DETAILED DESCRIPTION OF THE DRAWINGS

The present invention relates first to implants to be placed within a human spine, at least in part, within a disc space between adjacent vertebral bodies, for the purpose of fusing together those two adjacent vertebral bodies across the intermediate disc space. Though not so limited, it is desirable that these implants allow for the growth of bone from vertebra to adjacent vertebra through the implants themselves. To this end, each implant, when inserted, will have an upper implant surface for engaging the upper of the adjacent vertebral bodies and an opposed lower implant surface for engaging the adjacent lower vertebral body. It is desirable that each of these opposed surfaces has at least one opening, and possibly a plurality of openings, sufficient in size, and in continuity with each other, to allow for the growth of bone from vertebral body to adjacent vertebral body through said implant. While not requisite, it is also desirable that these implants further be hollow to facilitate such bone growth through the implant.

The implants of the present invention differ from all prior art implants in that they are adapted to receive through their trailing ends at least a pair of appropriately sized opposed bone screws that can be directed at an appropriate angle, at least one each, into each of the adjacent vertebral bodies adjacent the disc space to be fused. In a further novel teaching of the present invention, these implants adapted to receive the opposed bone screws are further adapted also to receive bone screw locks, or in the alternative the screws are adapted to receive locks to lock the screws to the implants to prevent the backing out of the bone screws from the implants.

To the extent that such implants are hollow and have openings through the surfaces, those openings and those hollows can preferably be filled with fusion promoting substances, including substances that are osteogenic, osteo-inductive, or osteo-conductive, whether naturally occurring, or artificially produced. Such substances could include, but are not limited to, bone in any of its forms, whether naturally occurring or processed, hydroxyapatite, calcium phosphate compounds, bone morphogenetic proteins, and genetic materials coding for the production of bone. Various embodiments of the present invention show implants having a large hollow therein. While not requisite, it may be advantageous to have a large access-way to the implant hollow. By way of example, a cap may be used for closing all or part of the access-way.

The present invention implant including the screws and locks may be formed of any material suitable for their intended purpose. To that end, they can be made of a surgical quality metal such as titanium or one of its alloys, cobalt chrome, or any other surgical quality metal suitable for the intended purpose. The implant can be made of an appropriate ceramic, be it naturally occurring or artificially produced. The implant also can be formed of or include cortical bone. The implant can be formed of plastics or composites, for example, a carbon fiber plastic material or bioresorbable material. The implant can further comprise or be filled with, treated with, coated with, or used in combination with various fusion promoting substances, including but not limited to hydroxyapatite, calcium phosphate compounds, bone morphogenetic proteins, genetic materials coding for the production of bone, and a chemical substance to inhibit scar formation.

Shown in FIGS. **1** through **5** is a first embodiment of the present invention. Generally cylindrical, highly perforated, hollow interbody spinal fusion implant **100** has a leading end **102** and a trailing end **104**. Leading end **102** has a threadable cap **112** having a drive aperture **114**, and holes **110** for the through growth of bone and vascular access. At trailing end **104** is a box-like recess **118** for receiving an implant driver (not shown). Trailing end **104** of implant **100** also has a plurality of bone holes **110** and two more specialized openings **120** which are threaded for receiving a complimentary threaded member from a driver so as to allow the driver to rigidly affix to trailing end **104** of implant **100**. Trailing end **104** also has bone screw receiving holes **130**, which additionally could be used to receive an implant driver. It can readily be appreciated that the trailing end of this implant or any implant embodiment of the present invention in general can be adapted in a multitude of ways for cooperatively receiving an implant driver to make possible the insertion of the implant into a spine.

Implant **100** has an upper surface **106** and an opposed lower surface **108**, each being adapted for placement into contact with one of the two adjacent vertebral bodies adjacent a disc space to be fused. Upper and lower surfaces **106** and **108** each have a plurality of openings **110** for the through growth of bone. The present invention includes any number or arrangement of openings so long as sufficient to work for the intended purpose. Upper and lower surfaces **106** and **108** also have an opening **134** and **136**, respectively, for allowing the passage therethrough of a bone screw for further attaching implant **100** to each of the adjacent vertebral bodies. Openings **134**, **136** are preferably shaped and formed so as to facilitate the insertion of bone screws **142** through the rear or trailing end **104** of implant **100** and in part through openings **134**,**136**. The heads **156** of screws **142** do not pass completely through openings **134**, **136**. Screws **142** pass out of implant **100** preferably at an angle of between 25° and 75° to the long axis of implant **100**.

Opposed vertebral body engaging screws **142** are illustrated as having the preferred, but not requisite, cancellous-type thread **148** and a pointed tip **144** with cutting flutes **146** so as to allow screws **142** to be self-tapping. While any screw useful for the intended purpose is contemplated to be within the scope of the present invention, a self-tapping screw with a cancellous-type thread pattern over a significant portion of the shaft, with a smooth shaft proximally corresponding to the portion within the implant, and a head that can be lagged against the implant is particularly preferred for its advantages. The screw head **156** has a drive recess **154**, here shown as a hexagon.

FIGS. **6**A and **6**B show a driver **176** for use with the first embodiment of the present invention. Driver **176** comprises a handle **178**, having an upper handle portion **179** and a lower handle portion **181**. Upper handle portion **179** is attached to a central shaft **180** which terminates in a hex

drive tip **184**. Shaft **180** passes coaxially through handle **178** which extends downward to form a second shaft **182** that houses shaft **180** and terminates distally in a second hexagonal tip **183**. An annular groove **175** in shaft **180** receives a ball and spring detent **177** to hold handle **181** and contiguous shaft **182** in selective position relative to handle **179** and contiguous shaft **180**.

As can be appreciated from FIG. **6**B, in use hexagonal driver tip **184** of shaft **180** is utilized to insert through the trailing end **104** of implant **100** bone screw **142** by means of a hex depression **154** in bone screw head **156**. Once screw **142** is fully inserted through the opening **130** in trailing end **104**, the enlarged portion of the head **156** is blocked from passing fully through implant **100** by a retaining flange **138** of the implant. At this point, it is possible to cause the vertebral body into which the threads of screw **142** are implanted to be lagged towards, that is to be compressed to, the implant surface and particularly towards trailing end **104** of implant **100** by further rotating screw **142**. Once the optimal compression has been obtained as determined by the surgeon at the time of surgery, with tip **184** of shaft **180** still engaged with screw head **156** within depression **154**, the surgeon then utilizes shaft **180** as a centering post and separates handle portion **181** from handle portion **179** by pressing downward. This downward pressure causes the detent ball and spring **177** to be forced out of annular groove **175** and allows second shaft **182** to move downward, taking with it lock **162** which was engaged to driver **176** prior to engaging driver **176** to bone screw **142**.

Lock **162** is circumferentially threaded with threads **172**. When second shaft **182** is advanced distally along shaft **180**, lock **162** contacts trailing wall **104** of implant **100**, such that threads **172** of lock **162** can be threaded into the receiving threads **140** of implant **100**. In this example, it can be appreciated that opening **130** is not fully threaded for its entire depth, but only sufficient to allow lock **162** to become generally flush with trailing wall **104**, at which point lock **162** can be quite rigidly tightened against the unthreaded portion of opening **130**, which acts as a stop, preventing any further movement of lock **162** into opening **130**. By binding lock **162** to trailing wall **104** of implant **100** and making lower surface **174** of lock **162** concave, allowance is made for motion of screws **142** relative to implant **100**. This allows the surgeon some freedom of choice in positioning screws **142** and in selecting the direction of the force vector to be generated relative to implant **100**. It further allows for some settling of the vertebrae should that occur over time without the danger of the screws acting to hold the vertebrae from implant **100**.

Alternatively, by any number of structural configurations, such as by way of an example an interference fit between screw head **156** and implant opening **130**, or by way of more deeply threading the opening **130**, or by flattening the top of the screws and making the circumferential perimeter flush to the lock, or by allowing the lock to contact the screw head, later motion of the screw can be prevented. Said differently, while the present example shows how to allow for variability in the screw's placement and provides for later movement of the screw as might occur with settling, in the alternative, the path of the screw through the implant can be rather narrowly defined, and any angular motion of the screw relative to the implant can be prevented.

FIGS. **7** through **13** show a second embodiment of the present invention. Implant **200**, though similar to implant **100**, differs from implant **100** in that the sides have been tangentially removed and the remaining upper and lower arcuate portions have been wedged apart, such that trailing end **204** is taller than the leading end **202**. The tangential truncation of the sides allows two implants **200** to be placed side-by-side, such that the combined width of the two implants is significantly less than the combined height of the implants.

The convergence of upper and lower surfaces **206**, **208** from trailing end **204** to leading end **202** is beneficial for inducing lordosis when implant **200** is inserted across the disc space between two adjacent vertebrae from anterior to posterior. Without in anyway departing from the present invention, the implants shown herein by way of example only, can be modified for posterior insertion, in which case the upper and lower surfaces may be generally convergent from the leading end to the trailing end.

Implant **200** has a leading end **202**, having a plurality of holes **210** therethrough for the through growth of bone and vascular access. Implant **200** does not have a removable cap as did implant **100**, relying rather on large opening **224** which may be present on each side, or one side only to provide access to the hollow interior **226** of implant **200** for the purpose of loading implant **200** with fusion promoting substances. The implant upper and lower surfaces **206** and **208**, respectively, each have at least one and preferably a plurality of bone holes **210**, and similar to implant **100**, a series of forward facing annular ratchets for engaging the vertebral bone. Upper surface **206** and lower surface **208** have openings **234** and **236**, respectively, for conducting therethrough bone engaging screws **242**. When implant **200** is implanted, screws **242** are introduced through trailing end **204** of implant **200**. Trailing end **204** has a pair of opposed bone screw receiving holes **230** angled so as to direct screw **242** introduced through trailing end **204** of implant **200**. Holes **230** receive screw **242**, which passes therethrough and into each of the adjacent vertebral bodies. Screw **242** preferably is at an angle to the longitudinal axis of implant **200** and more preferably at an angle of from 25° to 75°. Implant **200** has a plurality of bone holes **210**. Situated intermediate to opposed bone screw receiving holes **230** is a lock **262** having a head portion **256** with a hex well **264** therein, and opposed concave portions **272**. It should be understood that various driver engaging structures useful for the intended purpose are anticipated and within the scope of the present invention.

As shown in FIGS. **9** and **12**, when lock **262** is one-quarter turn short of being fully tightened, openings **230** are fully open for receiving opposed bone screws **242**.

As shown in FIGS. **11** and **13**, once opposed bone screws **242** have been installed, lock **262** can be further tightened by turning it 90 degrees until head **264** bottoms out against implant trailing end **204**, thereby allowing the locking screw to be solidly tightened to implant **200**.

In FIGS. **9** through **13**, it can be seen that a pair of bone screws **242** can be inserted through openings **230** in trailing end **204** of implant **200**, such that heads **256** of screws **242** are restrained within implant **200** by the contact of the enlarged head **256** against flange portion **238** of implant **200**. Threaded shaft **268** of lock **262** threads into the rear of implant **200**.

It can be noted in FIGS. **11** and **13** that while screws **242** have freedom to move closer together to allow for settling, screws **242** cannot back out of implant **200** with lock **262** in place. As previously discussed, while this is considered preferable, implant **200** can be so constructed to prevent any angular freedom of screw **242** relative to implant **200**. Further, implant **200** and lock **262** can be configured to cooperate to prevent any backward motion of screw head **256**.

FIGS. **14** through **20** show a third embodiment of the present invention. Implant **300** is generally cylindrical and hollow with a thin outer wall that is highly perforated and carries a helical thread. This particular thread configuration is offered by way of example only, and the invention anticipates and includes any thread suitable for the intended purpose. Further it is understood that a thread can be so formed that it becomes difficult to define the thread from the outer wall, such that the outer surface of the implant is, in essence, the peaks and valleys of the thread. It is further understood that while the thread shown here is generally continuous and helical, the thread also could be interrupted.

Implant **300** has a leading end **302** having a threadable cap **312** with a plurality of bone holes **310** and a central hex aperture **314** for receiving a driver. Alternative embodiment implants may be open at their leading ends, trailing ends, or both, or may be closeable or partially closeable with other than a threaded cap. Implant **300** has an upper bone engaging surface **306** and an opposed lower bone engaging surface **308**. Intermediate upper and lower surfaces **306** and **308**, implant **300** has side surfaces identical to surfaces **306** and **308**. Each of these four surfaces have an opening such as **334** and **336**, allowing for the passage of bone screw **342** therethrough. This arrangement allows for implant **300** to be inserted into the implantation site by being threaded into the spine until fully inserted and then properly aligned by quarter-turn increments. As implant **300** is advanced with every one-quarter turn, there is the opportunity to properly align a pair of opposed bone screws **242** through upper and lower surfaces **306** and **308**. It can be appreciated that implant **300** is highly perforated with a multitude of holes **310**, situated over each of the implant surfaces, though as few as one adequately sized hole per surface could suffice.

With attention to FIGS. **17** and **18**, it can be appreciated that trailing end **304** of implant **300** has a threaded central aperture **320** located within a partially rectangular recess **318** for threadably engaging an implant driver adapted to interdigit and to threadably connect thereto for rotating the implant, both clockwise and counterclockwise while simultaneously either pushing or pulling as desired by the surgeon. Trailing end **304** has four symmetrically disposed bone screw receiving holes **330**. Once a pair of opposed bone screws **342** have been inserted through trailing end **304** of implant **300** and into the adjacent vertebral bodies and sufficiently tightened, lock **362** is inserted into threaded aperture **320** by means of a driver placed into hex well **364** and then tightened down to the back of implant **300**. A pair of unused bone screw holes are then available as bone holes similar to **310**. FIG. **19** shows the structure of lock **362** having an enlarged head portion **366**, a threaded shaft **368**, and a shoulder **372** to allow lock **362** to be tightened against implant **300**.

FIG. **20** shows lock **362** in use, where it can be appreciated that head portion **352** of screw **342** is prevented from passing through implant **300** by retaining flange **338** at the base of hole **330**. It can also be appreciated that when lock **362** is fully tightened, portion **372** of head **366** can be tightened against implant **300** itself so as to, as previously described, allow for some convergent motion of the bone screws in the event of vertebral settling.

FIGS. **21** through **29** show a fourth embodiment of the present invention. Implant **400** has a convex leading end **402** and an opposite trailing end **404**, here shown as having a generally straight mid-portion with radiused junctions to the side walls of implant **400**. In the alternative, trailing end **402** of implant **400** could be generally convex and, still further, could be curved so as to generally conform to the contour of the anterior vertebral body in order to sit in close approximation thereto, without the need to be significantly recessed. In another alternative, trailing end **402** could be curved so as to extend significantly beyond the anterior cortical margins of the vertebral bodies to be fused.

Both leading end **402** and trailing end **404** of implant **400** are highly perforate to allow for vascular access to hollow interior **426** of implant **400**, and to allow for the growth of bone therethrough. While the present invention does not require the presence of such openings, these openings are considered highly desirable. Any variation in particular configuration of such openings, or their arrangement, and number, so long as useful for the intended purpose, are also within the scope of the present invention. Implant **400** has opposed upper and lower vertebral body engaging surfaces **406** and **408**, respectively, which preferably have surface irregularities serving to both increase the surface area of the implant and the ability of the implant to engage the adjacent vertebral bodies, thereby enhancing their stability. Implant upper and lower surfaces **406** and **408** have large windows or slots **424** therethrough, each in communication with the central hollow chamber **426** of the implant and each forming a direct path to its counterpart on the opposite surface through implant **400**.

As shown in FIGS. **23** and **25**, trailing end **404** of implant **400** has, in addition to the plurality of bone holes **410**, two specialized common holes **428**, each containing two further holes **430**. Each of holes **430** is adapted to receive a bone screw **442** through trailing end **404** of implant **400** at an angle such that the bone screw would be directed first through trailing end **404**, then through either one of upper or lower vertebral bone engaging surfaces **406** and **408** of implant **400**, and finally into the vertebral body itself at an angle preferably between 25° and 75°. Holes **430** and common hole **428** are angled apart so as to assure that a pair of bone screws **442** inserted therethrough will be directed one each into each of the vertebral bodies adjacent the disc space containing implant **400**. Trailing end **404** also has a central threaded aperture **420** for receiving a threaded member for cooperatively engaging an implant driver. Other ways of coupling the implant and implant driver can be readily anticipated and are within the scope of the present invention.

As can be appreciated from FIG. **25**, trailing end **404** of implant **400** is adapted to receive a total of four bone screws **442** deployed in upwardly and downwardly projecting opposed pairs, and further to receive into common holes **440** threaded lock members **462**, preventing screws **442** from backing out.

As can be appreciated from FIG. **24**, implant **400** has a height greater at its trailing end **404** than at its leading end **402**, such that the implant itself is lordotic, or capable of inducing a lordotic angulation between adjacent vertebral bodies when inserted into the spine from an anterior to posterior approach. The present invention also includes such implants where the upper and lower surfaces **406** and **408** are parallel rather than convergent and, still further, where the upper and lower surfaces **406** and **408** are divergent from the trailing end to the leading end, for use from a posterior to anterior approach.

When the implant as shown in FIG. **24** is inserted from anterior to posterior between the adjacent vertebral bodies, any tendency for implant **400** to back out of the implantation site created across the disc space due to the wedge-shaped contour of the implant is resisted by both the forward facing ratchetings **422** and the trajectory of screws **442**. Bone screws **442** further serve to pull the vertebral bodies to upper

and lower implant surfaces **406** and **408** so as to increase the compressive load thereon and mitigate against a loss of that compressive load or a distraction anteriorly which might otherwise occur if a patient were to bend back and forth or otherwise extend. Consistent with the preferred, highly perforate nature of implant **400**, the side walls of the implant also have holes **424** therethrough to allow for vascular access and the through growth of bone.

FIGS. **26** and **27** show details of holes **430** through trailing end **404** of implant **400** in relation to lock **462** and a pair of opposed bone screw **442**. In this example, bone screws heads **452** are sufficiently large that they are not able to pass through flange **438** and are thereby retained within the rear portion of implant **400**. Immediately distal to heads **452** of screws **442** is a smooth shaft portion **450** of a lesser cross sectional dimension than hole **430** which, in combination with the available space within common hole **428** between screw head **452** and lock **462**, allows for bone screw **442** to operate as a lag screw, but, nevertheless, be capable of some variability in its positioning and ability to move closer to implant **400** in the event of subsequent settling of the vertebral bodies towards implant **400**. In this embodiment, lock **462** takes the form of a disc with a threaded side wall **472**, capable of threadably engaging threads **472** within common hole **428**. Lock **462** comprises a hex receiving opening **464** for rotationally driving lock **462**. In a preferred variation, hex opening **464** or other equivalent driver receiving configuration, is the same as that of head **452** of screw **442**.

Turning now to FIGS. **28** and **29**, an alternative implant screw and lock arrangement is demonstrated for use with implant **400**, or as with the lock and screw configuration of FIG. **27** with any of the other embodiments of the present invention as may be appropriate. To that end, it should be appreciated that the implants shown herein are by way of example only and without limitation to the various combinations and permutations of the various screw, lock, and implant configurations shown, as well as the substantial equivalent thereof which are anticipated and claimed to be within the scope of the present invention.

Lock **461** differs from lock **462** in that extending from head portion **463** is a threaded shaft **468** for threading into a threaded hole between opposed holes **430** within common hole **428** of implant **400**. Unlike the mechanism illustrated in FIG. **27** where cap **462** tightens against the internal implant wall rather than locking against the screw heads themselves, thereby permitting motion, head **463** of lock **461** tightens against heads **452'** of screws **442'**. Screws **442'** differ from screws **442** in that the smooth proximal shaft portions **450'** are adapted to form an interference fit with the passageway through the rear portion of implant **400** and thereby allow the screws to have a precise trajectory while being rigidly locked to the implant. It should be appreciated then that FIGS. **27** and **29** each teach a structure by which an implant of the present invention can be constructed so as to either cause the screws passing therethrough to have a fixed trajectory or a variable angle placement. Further taught is structure for permitting implants to either allow for, or to prevent post-deployment angular motion of the bone screws relative to the implant after the screws have been locked therein; or to allow for but one degree of freedom of the locked screws for the settling or the coming closer together of the adjacent vertebrae. Various ways of achieving such structures are shown herein and may be combined in various ways with various embodiments of the implants shown or their substantial equivalents without departing from the scope of the present invention.

FIGS. **30** through **36** show a fifth embodiment of the present invention. Implant **500** is an improvement upon the implants described in pending Michelson U.S. application Ser. No. 09/106,216 incorporated herein by reference. These implants have been adapted to have bone screw receiving holes **530** in posterior walls of trailing end **504** and, in each of the opposed upper and lower surfaces **506** and **508**, respectively, holes **534** and **536** for transmitting bone screws therethrough, respectively. Trailing end **504** also comprises a rectangular slot **518** for engaging a rectangular member of an implant driver insertable therein. A threaded hole **520** located within slot **518** allows the implant driver to further be secured to the implant by threadably engaging the implant therethrough. This allows the implant, when properly engaged to the driver, to be rotated either clockwise or counterclockwise and simultaneously be pushed or pulled at the discretion of the surgeon.

While not requisite, in a preferred embodiment, implant **500** is highly perforate and has holes **510** for vascular access and bone through growth through its leading end **502**, side walls, and upper and lower surfaces **506** and **508**. While trailing end **504** is herein shown lacking additional bone holes, this has been done to emphasize that such openings are only preferred, not requisite. As herein before stated, the particular shape, number, and arrangement of the holes are all within the scope of the present invention so long as they are appropriate for their intended purposes.

Leading end **502** of implant **500** is herein shown with a cap **512**, which is threaded and removable, and can be operated by a driver engaging hex opening **514**. Cap **512** can be removed so that the hollow interior **526** of implant **500** can be compressibly loaded with bone. Cap **512** can then be screwed to the leading end **502** so as to prevent the gross extrusion of the osteogenic materials loaded under pressure within the implant while, nevertheless, providing for vascular access to the interior of the implant and bone growth therethrough. Further, cap **512** may provide structural reinforcement to the implant so as to provide enhanced strength.

Upper and lower surfaces **506** and **508** of implant **500** have a series of transverse fins **522** and interposed therebetween a plurality of bone slots and bone holes **510** for the growth of bone therethrough. Implant **500** as is described in co-pending U.S. application Ser. No. 09/106,216 is adapted to be inserted on its side and then, only after being fully inserted, rotated 90 degrees so that upper and lower surfaces **506** and **508** engage each of the adjacent vertebral bodies adjacent the disc space in which the implant has been implanted for fusion. Once implant **500** has been properly inserted, bone screws **542** are inserted through opposed holes **530** in trailing end **504** and through holes **534** and **536** in upper and lower surfaces **506** and **508**, respectively, with one each passing into each of the vertebral bodies. As with various of the other embodiments of the present invention it is anticipated that the trailing ends of said implants need not have a trailing wall, but rather a generalized opening without departing from the scope of the present invention.

As shown in FIGS. **35A–36**, bone screws **542** have a head **552** and at least a partially, cancellously threaded shaft which is longitudinally cleaved to form an expansion slit **560**. Screws **542** may be self-tapping. It may be alternatively beneficial to pre-drill an appropriate opening with a drill placed through the implant and into the vertebral body for receiving screw **542**. When screw **542** has been fully inserted, head **552** is prevented from further motion forward by retaining flange **538**, and it is then possible to generate a compressive lag of the vertebral body against implant **500** with screw **542**. A locking member **562**, having a smooth

shaft **568** terminating distally in tip **572** is then inserted through the drive opening in head **552** of screw **542** until portion **566** of lock **562** threadably engages within head **552**. Then as lock **562** is threaded more deeply into head **552** of screw **542**, point **572** wedges apart a conically tapered recess in the shaft of screw **542**, thereby wedging apart the two portions of the shaft.

FIG. **35**B is a top view of bone screw **542** of FIG. **35**C. FIG. **35** shows the crossed or Phillips type driver receiving structure of one preferred embodiment of the present invention. A central opening in screw **542** is adapted to receive lock **562**. FIG. **35**D is a top view of lock **562** and shows a hex configuration of one preferred embodiment of the present invention for receiving a driver.

In FIG. **36**, the opening of slot **560** is exaggerated to be more useful in demonstrating the function of this particular embodiment. Screw **542** may be constructed so as to take advantage of a proximal thread portion or other enlargement beyond the root diameter of the proximal shaft which can be utilized to form a lock against rearward migration of the screw as it contacts retaining flange **538**. With or without such a feature, screw **542** can also rely on its spreadable nature to prevent backward migration of the screw. Other variations on this theme, such as the use of a screw with an expandable casing, or any type of expandable screw are clearly within the scope of the present invention, as are screws having a hollow head and shank portion for transmitting therethrough a second element which is designed to protrude from the screw at an angle and therefore lock the screw in place.

FIGS. **37** through **42** show a sixth embodiment of the present invention. Implant **600** may generally be round or oblong or comprised in the top view of both arcuate and linear portions, or arcuate portions of differing arcs of radii. In one variation of implant **600**, upper and lower vertebrae engaging surfaces **606** and **608**, respectively, are but the end surfaces of the perimeter wall of the implant itself. While upper and lower surfaces **606** and **608** could be generally parallel from leading end **602** to trailing end **604**. In a preferred embodiment, trailing end **604** of implant **600** is taller than leading end **602** of implant **600**, such that the opposed upper and lower surfaces **606** and **608** are converging from the trailing end to the leading end. This offers the advantage that when implant **600**, which is adapted for insertion from anterior to posterior or from a position anterolaterally, is inserted, the end of the implant that will face posteriorly will be of a reduced height. This makes the insertion of the implant into the space from anterior to posterior much easier as less initial distraction of the disc space between the adjacent vertebrae is required. Further, having opposed upper and lower surfaces **606** and **608** diverge from leading end **602** to trailing end **604** allows for further restoration of the normal lordotic angulation through the disc space between the adjacent vertebrae to be fused.

Implant **600** has a plurality of holes **610** located through its perimeter wall to allow for the growth of bone and vascular access therethrough. Implant **600** has a large central hollow **626** for containing fusion promoting substances such as bone and for allowing the fusion of vertebrae to adjacent vertebrae through the implant through area **626** and through the disc space. Implant **600** is adapted to receive opposed bone screws **642** for engaging each of the vertebral bodies adjacent the disc space into which the implant is implanted.

As shown in FIG. **40**A, trailing end **604** of implant **600** has common holes **628** having opposed bone screw receiving holes **630**. Holes **630** are not only angled away from each other so as to face at an angle to the opposed upper and lower implant surfaces, but are further angled towards the midline of the implant as shown in FIG. **37**.

FIG. **40**B shows trailing end **-604'** of implant **600'**, which is a bone ring, such as a femoral ring of cortical bone. Trailing end **604'** has bone screw receiving holes **630***a*–**630***d* for receiving bone screws **642** therein. Bone screw receiving holes **630***a*' and **630***d*' are oriented toward lower surface **608'** for engaging a vertebral body above implant **600'**. Opposed bone screw receiving openings **630***b*' and **630***c*' are oriented toward upper surface **606'** for engaging a vertebral body below implant **600'**. Accordingly, it is appreciated that as used herein the term "opposed" is not limited to being diametrically opposed, but includes opposite facing screw holes that are offset from one another. Preferably as described herein a lock or locks are provided to retain the screws when passing at least in part, and retained at least part through the openings.

As shown in FIGS. **41** and **42**, holes **630** in a preferred embodiment have threaded walls **640**. In a first example as shown in FIG. **41**, bone screw **642** has a head portion **652** having a threaded portion **658** for threadably engaging the threaded wall **640** in hole **630** of implant trailing end **604**. Screw head **652** also has an enlarged head portion **654** incapable of passing through the threaded portion of hole **630** and further allowing for bone screw **642** to be securely tightened down to and against the implant, thereby locking it to the implant.

FIG. **42** illustrates an alternative design for a self-locking screw as a variation to that shown in FIG. **41**. Screw **642'** has a hex drive **654** similar to screw **642**. Also like screw **642**, screw **642'** has a threaded shaft **648** and a threaded head portion **658'**. However, unlike screw **642**, screw **642'** does not have an additional enlarged head portion such as portion **654** of screw **642**, but rather relies on flange portion **638** of opening **630** to stop the further progression of the screw head **652'** through the implant and allow for head **652'** to be securely tightened to the implant trailing end **604**.

As a further alternative to both screws **642** and **642'** being rigidly secured to implant **600** and resistant to any angular motion thereto, the trailing end of the implant includes a rotatable bearing having a threaded passageway therethrough and externally, at least in part, a curved profile allowing for the bearing to be trapped within rear wall **604** of the implant while still leaving it free to rotate within a complimentary socket formed therein. Because the screw threadably engages within the bearing, which is trapped within the rear wall of the implant it can be securely tightened to the bearing while yet still being free to move. In an alternative design, the bearing has slits and the screwhead, upon final tightening, expands the bearing so that it presses against the bearing retaining socket of the rear wall, locking the screw-bearing complex to the back of the implant to the extent desired. In a further variation of the **642** type screw the head may slightly flare outward from distal to proximal with expansion/compression slots therethrough allowing the head to be self locking within the threaded opening of the implant or a bearing as described above.

FIGS. **43** through **45** show an alternative embodiment of a locking screw mechanism which can be adapted for use with various of the other shown and/or described implant embodiments of the present invention. Trailing end **704** of an implant **700** has a hole **730** for accepting a bone screw **742**. Bone screw **742** has a head portion **752** having at least a part about its perimeter a convex surface **756** having a maximum diameter. Bone screw receiving hole **730** has a circumferential concavity portion **748** for receiving convexity portion **756** of the bone screw head. Bone screw head **752**

has internal threads **758** and a plurality of slots **760**, preferably four. Slots **760** allow screw **742** to be driven with a cruciate type driver and allow for head **752** to sufficiently compress to be fully received within hole **730** of the implant. It can be appreciated from FIGS. **43** through **45** that screw **742** can be placed at an angle to the implant **700**. Further, once the bone screw has been fully engaged into the adjacent vertebral body, the screw can be further rotated, allowing the vertebral body to be lagged to the implant, increasing the compressive load. Once a screw has been properly placed and tightened to the extent desired by the surgeon, a locking screw **762** having a head **766** and a threaded shaft **768** may be threaded into the threaded interior of the head **752** of bone screw **742**. The implant screw locking system of FIGS. **43** through **45** can be manufactured such that while the locking screw **762** may be lockably tightened to the bone screw **742**, and thus the backward migration of **742** from the implant prevented, the system can be designed so as to either allow for angular motion after the locking screw **762** is locked to the bone screw **742** or to prevent it. The function of the head in its ability to rotate and angulate within the implant is not dissimilar to the above described variation of the self locking screw and rounded bearing combination.

FIGS. **46**A through **53** show an eight and ninth embodiment of the present invention. Implants **800** and **900**, which are shown in FIGS. **46**A–**46**C can be used by themselves, or with a second of their kind, or as a complimentary pair as well shown in FIGS. **46**D and **46**F.

FIGS. **46**A–**53** show implants **800** and **900** and a series of steps useful for discussing a method of use of the present invention implants. Methods for inserting spinal implants are discussed in part in issued and pending patent applications to Michelson U.S. Pat. Nos. 5,593,409, 5,741,253, 5,484,437, Ser. Nos. 08/396,414, and 08/480,904, incorporated herein by reference. The disc space to be used is preferably, but not necessarily, distracted to optimal height and the vertebral bodies preferably, but not necessarily, properly aligned. A pair of overlapping bores, as best illustrated in FIG. **46**D, are then formed across the disc space with a bone removal device, as shown in FIG. **46**E. The bone removal device is preferably a drill having a diameter greater than the height of a distracted disc space such that arc-shaped portions of bone are removed from each of the vertebral bodies adjacent the disc space to be fused. The overlapping bores are generally oriented from anterior to posterior and preferably stop short of the spinal canal.

A bone removal device such as a drill or mill that may be conical can be utilized to complement the tapered configuration of the implant body. As shown in FIG. **46**E, however, in a preferred method a generally cylindrical drill DR or end mill is utilized to create a generally cylindrical bore "B" for receiving the implants. When a pair of generally cylindrical overlapping bores, preferably but not necessarily, having a diameter generally corresponding to that of the root diameter of the implant proximate the leading end are formed as per FIG. **46**D, the implants will come to be positioned such that the combined width of the implants at their leading ends will be less than the combined width of implants at their trailing end. That is, the implants will be angled in towards each other from anterior to posterior. This has the further benefit of swinging the junction of the lateral side walls and trailing ends further inward and away from escaping the anterior vertebral cortex, thereby avoiding protrusion of the lateral side wall to trailing end junctions and allowing for the installation of larger and longer implants than might otherwise be possible.

As has been taught by Michelson in the above identified applications and patents incorporated by reference herein, the disc space may be distracted in any number of ways and held distracted during the bore formation portion of the procedure. Some of the preferred ways include the use of long distractors (see, for example, FIG. **54**, long distractor **1000**), short distractors (see, for example, FIG. **53**, short distractor **1100**), and extended outer sleeves having distractor members for placement within the disc space and between the adjacent vertebral bodies (see, for example. FIG. **55**, outer sleeve **1300** with distractor members **1302**, **1304**) as described by Michelson in the above described applications and patents incorporated by reference herein. Other distractors such as those which attach to the vertebral bodies as by pins or screws might also be useful for the present intended purpose.

While surgery may be performed through a single bore first, in a preferred embodiment both bores are created in overlapping fashion prior to the insertion of the first implant which in this example is implant **800**. Implant **800** is affixed to an implant driver, which preferably engages the implant at trailing wall **804** by interdigitating with implant **800** and further binding to implant **800** by a thread such that it is possible both to rotate implant **800** in either direction and to push or pull simultaneously. While that may be achieved by having a driver which interdigitates with any of the openings into or through rear wall **804** and having a rotatable portion for threading into threaded opening **820** the present invention is not so limited and may include any driver useful for the intended purpose.

After implant **800** is fully seated with the medial side wall oriented immediately toward the disc space, a complementary implant **900** is inserted by allowing it to rotate within the maximum circumference of implant **800**. Pre-tapping the bores formed across the disc space prior to the insertion of the implants does not deviate from the present teaching. In a preferred embodiment, pre-tapping is not required as certain preferred embodiments of the present implants are tapered from their trailing to their leading ends and the leading ends have particularly significant thread heights making their ability to thread themselves into the bone particularly effective.

FIGS. **46**A, **46**B and **46**D, show openings at the trailing end of the implant for receiving opposed screws that may be oriented from the implant into each of the adjacent vertebral bodies. These screws enter the implant through the trailing end and the threaded shafts of the screws pass through openings in the opposite upper and lower vertebral body engaging surfaces of the implants. Shown in FIGS. **50**–**53** is a cut away through implant **900** of FIG. **46**B. This is a cross section through the mid-longitudinal axis of implant **900** and the adjacent vertebral bodies. FIGS. **47**A and **47**B show a screw driver **880** and FIG. **51** shows driver **880** driving a bone screw **842** through bone screw receiving hole **930** and out **842** through lower vertebrae engaging surface **908** into adjacent vertebral body V_2.

The present invention includes the use of any bone screws for this described purpose. In preferred embodiments, structure is provided to block the bone screws from disengaging from the implant or backing out. The screws may be rigidly locked to the implant or may be prevented from backing out in a manner that still allows for some relative motion between the screws and the implant. The latter may be beneficial for anticipating and allowing for some settling of the vertebral bodies towards the disc space. In use, as shown in FIG. **51**, the driver **880** is assembled to the screw **842** thereby compressing the head portion of the screw. The

screw is then introduced through the trailing end of the implant and directed into the body of one of the adjacent vertebrae passing out of an opening adapted for that purpose in one of the opposite vertebrae engaging surfaces of the implant. The head of the screw **842** is too large to pass through the opening in the implant, and yet is free to spin against the implant itself making it possible to lag the screw, or that is to draw the body of the vertebra to the implant and to generate compressive load between the implant and the vertebral body.

FIGS. **46**A and **46**C show a preferred embodiment of implant **800**. The lateral side wall and medial side wall have a distance therebetween defining an implant width transverse to the implant height. The width of implant **800** is less than its height along at least a portion of its length. The medial side wall is preferably configured to be positioned in close proximity to at least implant **900** such that the combined width of implants **800**, **900** is less than the combined height of those implants.

Implant **800** is similar to implant **900**, but differs from implant **900** in that while the lateral sides of implants **800** and **900**, respectively, are the same and in this example convex, the medial side of implant **800** has been relieved so as to allow for the convex medial side of implant **900** to protrude therein. Alternatively, the medial side of implant **800** can be relieved, in part absent, and/or concave.

Implant **800** also has at the medial side a convexity as shown by the contour of trailing support wall **804**. In a preferred embodiment, leading support wall **802** may similarly be concave. And further a portion of the medial side wall is absent so as to allow for the protrusion of implant **900** therein.

As shown in FIG. **46**B, thread **922** of implant **900** may have a generally constant outer diameter. Inasmuch as the body of implant **900** is generally conical such that it tapers from the larger trailing end **904** to the smaller leading end **902**, the height of thread **922** relative to the body increases from trailing end **904** to leading end **902**. Thus, while the outer diameter of the threads remains generally constant, the height of the thread increases from trailing end **904** to leading end **902**. This is similarly true for implant **800**.

In a preferred embodiment of implants **800**, **900** the start of the external thread about the perimeter of the implant is precisely indexed such that if the surgeon knows the depth of the bore created, he may select an implant of the desired length being less than or equal to the depth of the bore created and by starting the insertion of the implant in a preferred rotational alignment such as the desired final rotational alignment the implant when threaded in fully will come to rest such that trailing end **804**, **904** will be correctly rotationally aligned so that the screw receiving holes **834**, **836**, **934**, **936** will be oriented correctly towards the adjacent vertebral bodies while the profile of trailing ends **804**, **904** will correspond to the contour of the anterior vertebral body.

By way of example, for a bore measured to receive a 30 millimeter maximum length implant having a pitch of three millimeters as an example, the start of the thread at the implant leading end could be indexed such that the implant could be introduced rotationally oriented exactly as desired for the final positioning. Then, by making ten complete revolutions of three millimeters each the implant would assuredly come to rest with trailing wall **804** appropriately oriented and either be flush with the anterior vertebral cortices, or minimally counter-sunk to exactly the extent to which the surgeon caused the implant to enter the bore prior to initiating rotation. As previously mentioned, trailing end **804** of implant **800** could be rotationally asymmetrical, but nevertheless be symmetrical from side-to-side, such that each of the sides of the implant would be less protuberant posteriorly than a point along the mid-longitudinal axis such that the implant could be correctly inserted in increments of less than or equal to 180 degrees of rotation.

As shown in FIGS. **48** and **49**, screw **842** has a threaded shaft **848** having a leading end **844**, a tip **846**, and an opposite trailing end **852**. Shaft **848** has a thread form for engaging bone. Trailing end **852** has a screw head having an enlarged portion **856** having a diameter greater than the outer diameter of the threaded portion of shaft **848**. The screw head has a cruciate recess **861** for receiving the end **890** of screw driver **880**.

FIG. **46**B shows a front view of an embodiment of the present invention with implants **800**, **900** properly implanted across the disc space between adjacent vertebral bodies V_1 and V_2. Openings **820**,**920** also are adapted to receive a screw device to link the implant to other implants, to a staple, or to receive a locking screw to lock bone engaging screws to the implant as disclosed in Michelson U.S. patent application Ser. No. 08/926,334 incorporated herein by reference. As shown in the preferred embodiment of the present invention, trailing ends **804** and **904** of implants **800** and **900**, respectively, preferably are rotationally asymmetrical about the longitudinal axes of the implants such that the designated medial side of each of the implants has a length greater than the lateral sides of the same implants. Trailing ends **804**, **904** preferably are structured to have a lesser length along their lateral sides than through the mid-longitudinal axis and are preferably contoured so as to sit on the anterior rims of the vertebral bodies without protruding dangerously therefrom as set forth in pending Michelson application Ser. No. 09/263,266 incorporated herein by reference. In another embodiment of the present invention, the trailing ends of the implants can have a maximum length along the mid-longitudinal axis greater than the length along either of the medial and lateral sidewalls so that the bone screw receiving holes can be oriented towards the adjacent vertebral bodies in half rotation increments rather than requiring a full rotation. While for implant **900** this would require no other modification than as described for the trailing end, in regard to implant **800** each of the lateral and medial side walls would have to be relieved to allow for the receipt of the perimeter of implant **900** within the maximum perimeter of implant **800**.

In each of the examples of the present invention as offered, it is understood that the invention is limited to screws that are appropriate for their intended purpose and thus related to the overall size of the implant as it relates to the region of the spine for which it is configured for implantation.

Specifically, the screws of the present invention have the following preferred size. When for use in the lumbar spine, the screws have at least partially threaded shafts having outer diameters (major diameter) not less than 4.8 mm and not greater than 10 mm with 6 mm to 8 mm generally preferred. A preferred root diameter is at least 1.5 mm less than the outer diameter and most preferably 2.5 mm to 5 mm. When the screw is used from anterior to posterior, a length of from 10 mm to 40 mm is preferred with 20 mm to 30 mm being more preferred. When the screw is used in a lateral approach, a length of from 10–50 mm is preferred with 25–35 mm being more preferred.

The screws preferably have head portions having an outside dimension generally equal to or greater than the outer diameter of the thread of the threaded shaft. An exception is where the head has an outwardly facing

machine thread and the shaft has a cancellous thread with the turns or pitch of the thread being spaced apart to exceed the wall thickness of that portion of the implant adapted to retain the screw head.

Further, the screws preferably have pointed leading ends and are self tapping with cutting flutes and have an interrupted thread at their leading end. The screws preferably have a smooth shaft portion proximally near the head. All screws preferably have at their trailing ends adapted for cooperatively engaging a screw driver.

Screws used in the cervical spine vary from screws used in the lumbar spine in that a preferred major diameter is 3.5–5.5 mm with 4.0 mm to 5.0 mm being more preferred. A preferred length is from 8–20 mm with 12–16 mm being more preferred.

Preferred screws for use in the thoracic spine vary from screws used in the lumbar and cervical spine in that a preferred thread has an outer diameter from 4–8 mm with 5–7 mm being more preferred. The screws having a length of from 10 mm to 30 mm with a length of approximately 20 mm plus or minus 5 mm being more preferred.

It is believed that the operation and construction of the present invention will be apparent from the foregoing description and, while the invention shown and described herein has been characterized as particular embodiments, changes and modifications may be made therein without departing from the spirit and scope of the invention, which is limited only by the scope of the claims.

What is claimed is:

1. An apparatus comprising:

an interbody spinal fusion implant for surgical implantation at least in part within a disc space between two adjacent vertebral bodies in a segment of a human spine, said implant comprising a leading end for entry into the spine, a trailing end opposite said leading end, and a length therebetween; and upper and lower portions for contacting each of the adjacent vertebral bodies when positioned therein, each of said upper and lower portions having at least one opening adapted to communicate with one of the adjacent vertebral bodies, said openings of said upper and lower portions being in communication with one another and adapted for permitting for the growth of bone from adjacent vertebral body to adjacent vertebral body through said implant, each of said upper and lower portions having at least one screw hole passing therethrough proximate said trailing end, each of said screw holes having a longitudinal axis;

bone screws adapted for placement through said screw holes of said upper and lower portions and into each of the adjacent vertebral bodies adjacent the disc space to be fused and into which said implant is adapted to be positioned, said trailing end of said implant being adapted to receive said bone screws and to transmit at least a portion of said bone screws through said upper and lower portions so as to engage at least one each into each of the vertebral bodies adjacent the disc space, each of said bone screws having a longitudinal axis; and

a lock having a central longitudinal axis that is coaxial with at least one of the longitudinal axis of one of said screw holes and the longitudinal axis of one of said bone screws when engaged to said implant for preventing backing out of only a single one of said bone screws from said implant, said lock being adapted to prevent said single one of said bone screws from backing out of said implant without penetrating said single one of said bone screws.

2. The apparatus of claim **1**, wherein said implant further comprises a hollow interior for holding bone growth promoting material, said hollow interior being in communication with said at least one opening in each of said upper and lower portions.

3. The apparatus of claim **1**, wherein said implant has means for retaining a portion of said bone screw to prevent said bone screw from passing entirely through said screw hole into which it is adapted to be inserted.

4. The apparatus of claim **1**, wherein said screw holes are opposed and divergently angled to one another.

5. The apparatus of claim **1**, wherein said screw holes are angled between 25 and 75 degrees from a mid-longitudinal axis of said implant.

6. The apparatus of claim **1**, wherein said screw holes include retaining seats peripheral to said screw holes adapted to receive and to block the passage of at least a portion of said bone screws to be inserted therethrough.

7. The apparatus of claim **1** wherein said screw holes are opposed and divergently angled and extend from said trailing end and through said upper and lower portions.

8. The apparatus of claim **7**, wherein said screw holes extending from said trailing end are configured so as to be adapted to be oriented towards the adjacent vertebral bodies in half rotation increments of said implant.

9. The apparatus of claim **1**, wherein said bone screws and said screw holes cooperate to allow for angular motion of said bone screws relative to the implant.

10. The apparatus of claim **1**, wherein each screw hole is formed to retain a respective bone screw in a position in which the longitudinal axis of said respective bone screw is aligned with the longitudinal axis of said screw hole.

11. The apparatus of claim **1**, wherein said screw hole has an increased upper portion that is threaded.

12. The apparatus of claim **1**, wherein at least one of said screw holes has an upper diameter portion and a smaller lower diameter portion to prevent a bone screw being placed in said one of said screw holes from passing entirely through said at least one of said screw holes.

13. The apparatus of claim **1**, wherein at least a portion of said bone screws are adapted to pass from said interior of said implant through said screw holes and into the adjacent vertebral body to anchor said implant to the adjacent vertebral body.

14. The apparatus of claim **1**, wherein said bone screws are lag screws.

15. The apparatus of claim **1**, wherein said bone screws are appropriately sized and configured to function for their intended purpose.

16. The apparatus of claim **1**, wherein said bone screws are sized and configured for use in the cervical spine.

17. The apparatus of claim **1**, wherein said bone screws are sized and configured for use in the lumbar spine.

18. The apparatus of claim **1**, wherein said bone screws are sized and configured for use in the anterior aspect of the spine.

19. The apparatus of claim **1**, wherein said bone screws have a sharp distal end.

20. The apparatus of claim **1**, wherein said bone screws have a distal end and a head opposite said distal end, said head being adapted to engage a driving instrument.

21. The apparatus of claim **1**, wherein said bone screws are selected from a series of screws having different lengths.

22. The apparatus of claim **1**, wherein said bone screws have a head, a shaft attached to said head and terminating at a tip, said shaft having a thread, said head having a transverse cross sectional dimension greater than the transverse cross sectional dimension of said shaft, said head being configured to cooperatively engage a driver instrument.

23. The apparatus of claim **22**, wherein said head of at least one of said bone screws has a first upper diameter section and a smaller lower diameter section.

24. The apparatus of claim **22**, wherein said head of at least one of said bone screws has engagement means for engagement with a screw-driving tool.

25. The apparatus of claim **24**, wherein said engagement means is an irregular recess.

26. The apparatus of claim **24**, wherein said bone screws are within the length between said leading and trailing ends when positioned through said screw holes.

27. The apparatus of claim **1**, wherein said bone screw is at least in part made of a resorbable material.

28. The apparatus of claim **1**, wherein said bone screw comprises a metal suitable for human implantation.

29. The apparatus of claim **1**, wherein at least one of said bone screws has a head dimensioned to achieve an interference fit with a respective one of said screw holes.

30. The apparatus of claim **1**, wherein at least one of said bone screws has a shaft dimensioned to achieve an interference fit with a respective one of said screw holes.

31. The apparatus of claim **1**, wherein said bone screws are self-tapping.

32. The apparatus of claim **31**, wherein said bone screws each include a tip, fluting interrupt at least two thread turns proximate said tip.

33. The apparatus of claim **1**, wherein said trailing end of said implant includes retaining seats peripheral to said screw holes adapted to receive and to block the passage of at least a portion of said screws to be inserted therethrough.

34. The apparatus of claim **1**, wherein said trailing end of said implant is adapted to cooperatively receive said lock for locking said bone screw to said implant.

35. The apparatus of claim **1**, wherein said trailing end of said implant is configured to cooperatively engage an implant driver.

36. The apparatus of claim **1**, wherein said implant a adapted to cooperatively receive said lock for looking said bone screw to said implant.

37. The apparatus of claim **1**, wherein said lock allows for angular motion of said bone screws relative to the implant.

38. The apparatus of claim **1**, wherein said lock is a screw.

39. The apparatus of claim **1**, wherein said bone screws and said lock do not project beyond said trailing end of said implant when said implant is installed.

40. The apparatus of claim **1**, wherein said bone screw has a head with an irregular depression in the top of said head for engagement with a screwdriver; and said lock has a head with an irregular depression in said head for engagement with a screwdriver, whereby both said heads of said bone screw and said lock may be engaged by the same screwdriver.

41. The apparatus of claim **1**, wherein said upper and lower portions are parallel to one another.

42. The apparatus of claim **1**, wherein said upper and lower portions are convergent to one another.

43. The apparatus of claim **1**, wherein said upper and lower portions are generally planar surfaces.

44. The apparatus of claim **1**, wherein said upper and lower portions are opposed arcuate portions.

45. The apparatus of claim **1**, wherein at least a portion of said upper and lower portions are arcuate along at least a portion of their length.

46. The apparatus of claim **45**, wherein said opposed arcuate portions form at least a portion of a cylinder along the length of said implant.

47. The apparatus of claim **45**, wherein said opposed arcuate portions form an angular orientation relative to one another.

48. The apparatus of claim **45**, wherein said opposed arcuate portions form a cylindrical shape.

49. The apparatus of claim **45**, wherein said opposed arcuate portions form a frusto-conical shape.

50. The apparatus of claim **45**, wherein each of said opposed arcuate portions have at least a portion of a thread thereon.

51. The apparatus of claim **50**, wherein said thread has peaks and said peaks are relatively constant along the length of said implant so that the outer diameter of said implant is generally constant.

52. The apparatus of claim **50**, wherein said thread has a constant height as measured from said opposed arcuate portions.

53. The apparatus of claim **50**, wherein said thread of said implant is interrupted.

54. The apparatus of claim **50**, wherein said thread of said implant has a sharp pointed profile at said leading end and progresses to a thicker and more squared profile at said trailing end.

55. The apparatus of claim **50**, wherein said thread of said implant is a projection generally oriented perpendicular to the mid-longitudinal axis.

56. The apparatus of claim **50**, wherein said thread of said implant forms a single helix.

57. The apparatus of claim **1**, wherein each of said upper and lower portions have at least one bone engaging projection thereon.

58. The apparatus of claim **57**, wherein said projection is a fin.

59. The apparatus of claim **57**, wherein said projection a ridge.

60. The apparatus of claim **1**, wherein at least one of said leading and trailing ends is open to allow access to a hollow interior.

61. The apparatus of claim **60**, further comprising a cap for closing at least one of said ends of said implant, said cap having an exterior surface and an interior surface.

62. The apparatus of claim **61**, wherein said cap includes a threaded portion for threadably engaging said leading end of said implant.

63. The apparatus of claim **61**, wherein said cap is perforated.

64. The apparatus of claim **1**, wherein said implant comprises an artificial material other than bone.

65. The apparatus of claim **1**, wherein said implant a made of an artificial material that is stronger than bone.

66. The apparatus of claim **1**, wherein said implant a made of an artificial material that is harder than bone.

67. The apparatus of claim **1**, wherein said implant comprises bone.

68. The apparatus of claim **67**, wherein said bone includes cortical bone.

69. The apparatus of claim **67**, wherein said bone is compressively loaded into said implant.

70. The apparatus of claim **1**, wherein said implant comprises bone growth promoting material.

71. The apparatus of claim **70**, wherein said bone growth promoting material is selected from one of bone morphogenetic protein, hydroxyapatite, and genes coding for the production of bone.

72. The apparatus of claim **70**, wherein said bone growth promoting material is compressively loaded into said implant.

73. The apparatus of claim **1**, wherein said implant is treated with a bone growth promoting substance.

74. The apparatus of claim **1**, wherein said implant is a source of osteogenesis.

75. The apparatus of claim **1**, wherein said implant is at least in part bioabsorbable.

76. The apparatus of claim **1**, wherein said implant comprises a plastic material.

77. The apparatus of claim **1**, wherein said implant comprises a ceramic material.

78. The apparatus of claim **1**, wherein said implant is formed of a porous material.

79. The apparatus of claim **1**, wherein said implant is formed of a material that intrinsically participates in the growth of bone from adjacent vertebral body to adjacent vertebral body through said implant.

80. The apparatus of claim **1**, in combination with a chemical substance to inhibit scar formation.

81. The apparatus of claim **1**, in combination with a fusion promoting substance.

82. The apparatus of claim **81**, wherein said fusion promoting substance includes at least one of bone, bone morphogenetic protein, hydroxyapatite, and genetic materials coding for the production of bone.

83. The apparatus of claim **1**, in combination with an orthopedic device for use in spinal surgery.

84. The apparatus of claim **83**, wherein said orthopedic device is a bone removal device for preparing a space between and at least in part into the adjacent vertebral bodies.

85. The apparatus of claim **84**, wherein said bone removal device is one of a drill and a mill.

86. The apparatus of claim **83**, wherein said orthopedic device is a screw driver for inserting bone screws.

87. The apparatus of claim **83**, wherein said orthopedic device is an implant driver for inserting said spinal implant.

88. The apparatus of claim **83**, wherein said orthopedic device is a distractor for distracting the disc space between the adjacent vertebral bodies.

89. The apparatus of claim **83**, wherein said orthopedic device is a sleeve for providing protected access to the disc space between the adjacent vertebral bodies.

90. The apparatus of claim **1**, wherein said lock has a maximum dimension transverse to the central longitudinal axis of said lock, each of said bone screws having a maximum dimension transverse to the longitudinal axis of each bone screw, the maximum transverse dimension of said lock being greater than the maximum transverse dimension of one of said bone screws.

91. The apparatus of claim **1**, wherein said lock has an upper surface and a lower surface opposite said upper surface, said lower surface being at least in part concave.

92. The apparatus of claim **1**, wherein said lock has a through hole therethrough for accessing the bone screw through the lock.

93. An apparatus comprising:

an interbody spinal fusion implant for surgical implantation at least in part within a disc space between two adjacent vertebral bodies in a segment of a human spine, said implant comprising a leading end for entry into the spine, a trailing end opposite said leading end, and a length therebetween; and upper and lower portions for contacting each of the adjacent vertebral bodies when positioned therein, each of said upper and lower portions having at least one opening adapted to communicate with one of the adjacent vertebral bodies, said openings of said upper and lower portions being in communication with one another and adapted for permitting for the growth of bone from adjacent vertebral body to adjacent vertebral body through said implant, each of said upper and lower portions having at least one screw hole passing therethrough proximate said trailing end;

bone screws adapted for placement through said screw holes of said upper and lower portions and into each of the adjacent vertebral bodies adjacent the disc space to be fused and into which said implant is adapted to be positioned, said trailing end of said implant being adapted to receive said bone screws and to transmit at least a portion of said bone screws through said upper and lower portions so as to engage at least one each into each of the vertebral bodies adjacent the disc space; and

a lock for preventing backing out of only a single one of said bone screws from said implant, said lock being adapted to cover at least a portion of only a single one of said bone screw holes when said lock is engaged to said implant, said lock having central longitudinal axis, a maximum dimension transverse to the central longitudinal axis, and a maximum height parallel to the central longitudinal axis, the maximum transverse dimension of said lock being greater than the maximum height of said lock.

94. The apparatus of claim **93**, wherein said implant further comprises a hollow interior for holding bone growth promoting material, said hollow interior being in communication with said at least one opening in each of said upper and lower portions.

95. The apparatus of claim **93**, wherein said screw holes are opposed and divergently angled to one another.

96. The apparatus of claim **93**, wherein said bone screw is at least in part made of a resorbable material.

97. The apparatus of claim **93**, wherein said lock allows for angular motion of said bone screws relative to the implant.

98. The apparatus of claim **93**, wherein said lock is a screw.

99. The apparatus of claim **93**, wherein said upper and lower portions are parallel to one another.

100. The apparatus of claim **93**, wherein said upper and lower portions are convergent to one another.

101. The apparatus of claim **93**, wherein at least a portion of said upper and lower portions are arcuate along at least a portion of their length.

102. The apparatus of claim **101**, wherein said opposed arcuate portions form at least a portion of a cylinder along the length of said implant.

103. The apparatus of claim **101**, wherein said opposed arcuate portions form a frusto-conical shape.

104. The apparatus of claim **101**, wherein each of said opposed arcuate portions have at least a portion of a thread thereon.

105. The apparatus of claim **93**, wherein each of said upper and lower portions have at least one bone engaging projection thereon.

106. The apparatus of claim **93**, wherein said implant is at least in part bioabsorbable.

107. The apparatus of claim **93**, in combination with a fusion promoting substance.

108. The apparatus of claim **107** wherein said fusion promoting substance includes at least one of bone, bone morphogenetic protein, hydroxyapatite, and genetic materials coding for the production of bone.

109. The apparatus of claim **93**, wherein the maximum height of said lock is off-set from the central longitudinal axis of said lock.

110. The apparatus of claim **93**, wherein each of said bone screws have a maximum dimension transverse to the longitudinal axis or each bone screw, the maximum transverse dimension of said lock being greater than the maximum transverse dimension of one of said bone screws.

111. An apparatus comprising:

an interbody spinal fusion implant for surgical implantation at least in part within a disc space between two adjacent vertebral bodies in a segment of a human spine, said implant comprising a leading end for entry into the spine, a trailing end opposite said leading end, and a length therebetween; and upper and lower portions for contacting each of the adjacent vertebral bodies when positioned therein, each of said upper and lower portions having at least one opening adapted to communicate with one of the adjacent vertebral bodies, said openings of said upper and lower portions being in communication with one another and adapted for permitting for the growth of bone from adjacent vertebral body to adjacent vertebral body through said implant, each of said upper and lower portions having at least one screw hole passing therethrough proximate said trailing end, each of said screw holes having a longitudinal axis;

bone screws adapted for placement through said screw holes of said upper and lower portions and into each of the adjacent vertebral bodies adjacent the disc space to be fused and into which said implant is adapted to be positioned, said trailing end of said implant being adapted to receive said bone screws and to transmit at least a portion of said bone screws through said upper and lower portions so as to engage at least one each into each of the vertebral bodies adjacent the disc space, each of said bone screws having a longitudinal axis; and

a lock having a central longitudinal axis that is coaxial with at least one of the longitudinal axis of one of said screw holes and the longitudinal axis of one of said bone screws when engaged to said implant for preventing backing out of only a single one of said bone screws from said implant, said lock having an overall maximum dimension transverse to the central longitudinal axis of said lock and an outer perimeter defined by the overall maximum transverse dimension, said outer perimeter being threaded.

112. The apparatus of claim **111**, wherein said implant further comprises a hollow interior for holding bone growth promoting material, said hollow interior being in communication with said at least one opening in each of said upper and lower portions.

113. The apparatus of claim **111**, wherein said screw holes are opposed and divergently angled to one another.

114. The apparatus of claim **111**, wherein said lock allows for angular motion of said bone screws relative to the implant.

115. The apparatus of claim **111**, wherein said upper and lower portions are parallel to one another.

116. The apparatus of claim **111**, wherein said upper and lower portions are convergent to one another.

117. The apparatus of claim **111**, wherein at least a portion of said upper and lower portions are arcuate along at least a portion of their length.

118. The apparatus of claim **117**, wherein each of said opposed arcuate portions have at least a portion of a thread thereon.

119. The apparatus of claim **111**, wherein each of said upper and lower portions have at least one bone engaging projection thereon.

120. The apparatus of claim **111**, wherein said implant is at least in part bioabsorbable.

* * * * *