US006447546B1

(12) **United States Patent**
Bramlet et al.

(10) **Patent No.: US 6,447,546 B1**
(45) **Date of Patent: Sep. 10, 2002**

(54) **APPARATUS AND METHOD FOR FUSING OPPOSING SPINAL VERTEBRAE**

(75) Inventors: **Dale G. Bramlet**, 2044 Brightwaters Blvd., NE., St. Petersburg, FL (US) 33704-3010; **Peter Sterghos**, St. Petersburg, FL (US); **Jeffrey W. Godsted**, Round Rock, TX (US)

(73) Assignee: **Dale G. Bramlet**, St. Petersburg, FL (US)

(*) Notice: Subject to any disclaimer, the term of this patent is extended or adjusted under 35 U.S.C. 154(b) by 27 days.

(21) Appl. No.: **09/635,436**

(22) Filed: **Aug. 11, 2000**

(51) **Int. Cl.**[7] **A61F 2/44**

(52) **U.S. Cl.** **623/17.16**; 623/17.11

(58) **Field of Search** 623/17.11, 17.12, 623/17.13, 17.14, 17.15, 17.16, 17.17, 16.11; 606/61

(56) **References Cited**

U.S. PATENT DOCUMENTS

3,374,786	A		3/1968	Callender, Jr.	128/92
3,791,380	A	*	2/1974	Dawidowski	128/92
3,892,232	A		7/1975	Neufeld	128/92
4,009,712	A		3/1977	Burstein et al.	128/92
4,175,555	A		11/1979	Herbert	128/92
4,237,875	A		12/1980	Termanini	128/92
4,379,451	A		4/1983	Getscher	128/92
4,409,974	A		10/1983	Freedland	128/92
4,432,358	A		2/1984	Fixel	128/92
4,488,543	A		12/1984	Tornier	128/92
4,494,535	A		1/1985	Haig	128/92
4,519,100	A		5/1985	Wills et al.	3/1.9
4,561,432	A		12/1985	Mazor	128/92
4,612,920	A		9/1986	Lower	128/92
4,621,629	A		11/1986	Koeneman	128/92
4,632,101	A		12/1986	Freedland	128/92
4,653,489	A		3/1987	Tronzo	128/92
4,657,001	A		4/1987	Fixel	128/92
4,721,103	A		1/1988	Freedland	128/92
4,759,352	A		7/1988	Loxier	128/92
4,787,378	A		11/1988	Sodhi	128/92
4,791,918	A		12/1988	Von Hasselbach	128/924
4,898,156	A		2/1990	Gatturna et al.	606/72
4,946,468	A		8/1990	Li	606/232
4,964,403	A		10/1990	Karas et al.	606/60
4,968,315	A		11/1990	Gatturna	606/72
4,969,887	A		11/1990	Sodhi	606/67

(List continued on next page.)

FOREIGN PATENT DOCUMENTS

EP	0 637 439	2/1995
EP	0 697 200	2/1996
EP	0 951 879	10/1999

OTHER PUBLICATIONS

"Anchorlok™ Questus™ Leading Edge™ Soft Tissue Anchor System," Brochure, Wright Medical Technology, Inc., 1995.

Primary Examiner—Corrine McDermott
Assistant Examiner—Hieu Phan
(74) *Attorney, Agent, or Firm*—Kenyon & Kenyon

(57) **ABSTRACT**

An apparatus and method for fusing opposing spinal vertebrae is disclosed. In an embodiment for a spinal implant of the present invention, the implant includes a body assembly and a retention member coupled to the body assembly. The retention member includes a tang where the tang is extendible from the body assembly. In a method of the present invention, the method includes the step of inserting an implant between adjacent vertebrae with a retention member of the implant in a first retracted configuration. The method also includes the step of configuring the retention member in a second extended configuration wherein when the retention member is in its second extended configuration, a portion of a tang of the retention member extends from the implant and into one of the adjacent vertebrae.

21 Claims, 12 Drawing Sheets

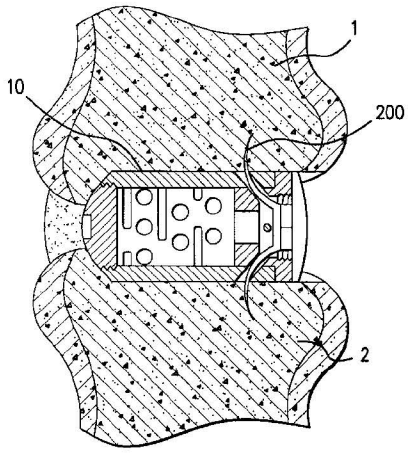

GLOBUS EX. 1022

U.S. PATENT DOCUMENTS

4,973,332 A 11/1990 Kummer 606/65
4,973,333 A 11/1990 Treharne 606/77
5,002,550 A 3/1991 Li 606/139
5,007,910 A 4/1991 Anapliotis et al. 606/65
5,032,125 A 7/1991 Durham et al. 606/62
5,041,114 A 8/1991 Chapman et al. 606/62
5,041,116 A 8/1991 Wilson 606/65
5,046,513 A 9/1991 Gatturna et al. 128/898
5,057,103 A 10/1991 Davis 606/63
5,062,851 A 11/1991 Branemark 623/18
5,087,266 A 2/1992 Fixel 606/65
5,098,433 A 3/1992 Freedland 606/63
5,116,336 A 5/1992 Frigg 606/65
5,129,901 A 7/1992 Decoste 606/65
5,176,681 A 1/1993 Lawes et al. 606/64
5,192,303 A 3/1993 Gatturna et al. 606/232
5,207,679 A 5/1993 Li 606/72
5,217,486 A 6/1993 Rice et al. 606/232
5,300,074 A 4/1994 Frigg 128/67
5,324,292 A 6/1994 Meyers 606/73
5,356,410 A 10/1994 Pennig 606/62
5,356,413 A 10/1994 Martins et al. 606/75
5,372,599 A 12/1994 Martins 606/75
5,417,692 A 5/1995 Goble et al. 606/73
5,417,712 A 5/1995 Whittaker et al. 606/232
5,429,641 A 7/1995 Gotfried 606/67
5,437,674 A 8/1995 Worcel et al. 606/73
5,456,721 A 10/1995 Legrand 623/13
5,458,601 A 10/1995 Young, Jr. et al. 606/72
5,472,452 A 12/1995 Trott 606/232
5,478,342 A 12/1995 Kohrs 606/73
5,489,210 A 2/1996 Hanosh 433/173
5,522,845 A 6/1996 Wenstrom, Jr. 606/232
5,531,792 A 7/1996 Huene 623/16
5,534,004 A 7/1996 Santangelo 606/68
5,571,104 A 11/1996 Li 606/72
5,578,035 A 11/1996 Lin 606/68
5,591,168 A 1/1997 Judet et al. 606/65
5,593,409 A 1/1997 Michelson 606/61
5,643,321 A 7/1997 McDevitt 606/232
5,702,449 A 12/1997 McKay 623/17
5,766,253 A 6/1998 Brosnahan, III 623/17
5,800,550 A * 9/1998 Sertich 623/17
5,895,427 A 4/1999 Kuslich et al. 623/17
5,968,098 A 10/1999 Winslow 623/17
5,980,522 A * 11/1999 Koros et al. 606/61
6,129,763 A * 10/2000 Chauvin et al. 623/17
6,214,050 B1 * 4/2001 Huene 623/17.15

* cited by examiner

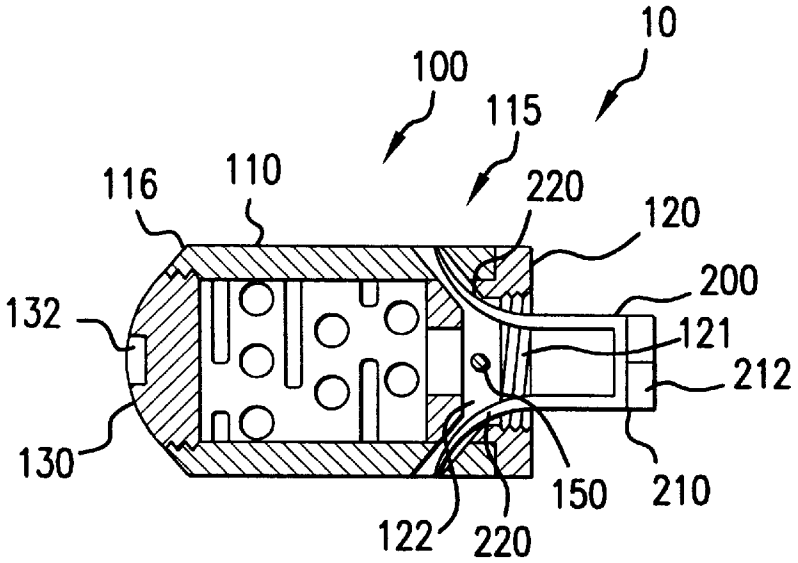
10
100
115
116
110
220
120
200
132
121
212
130
150
210
122
220

FIG.1

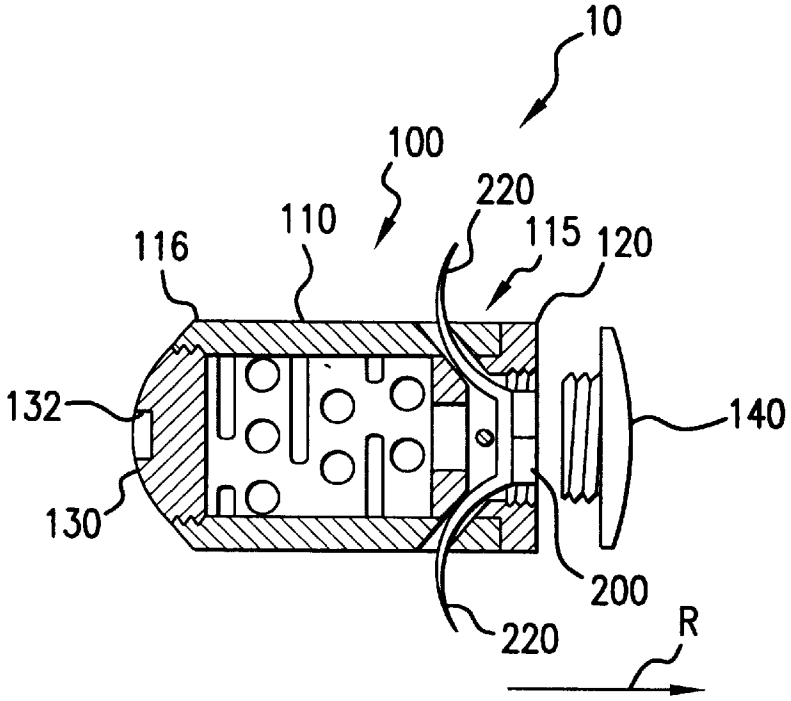
10
100
220
110
115
120
116
132
140
130
200
220
R

FIG.2

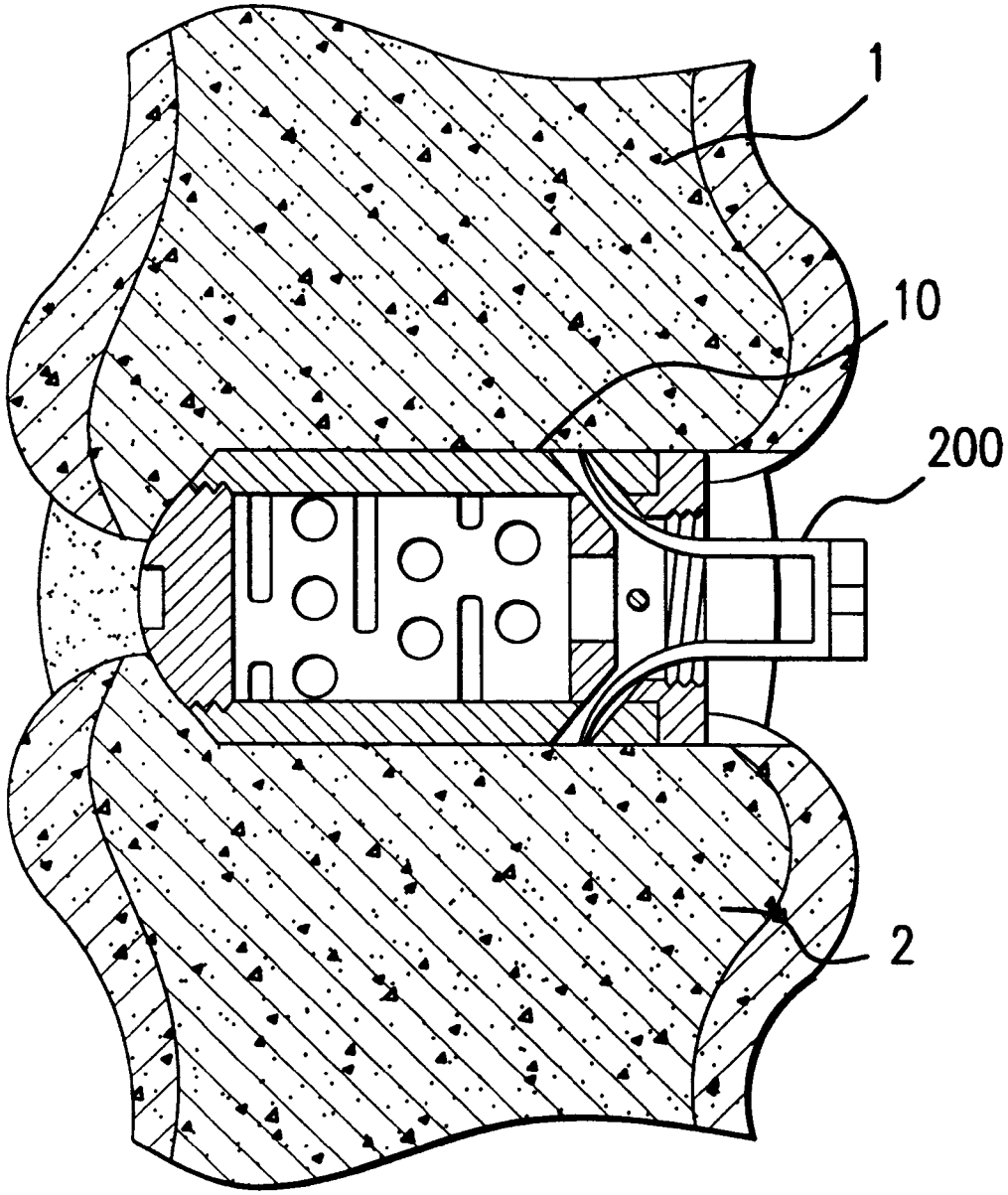

FIG.3

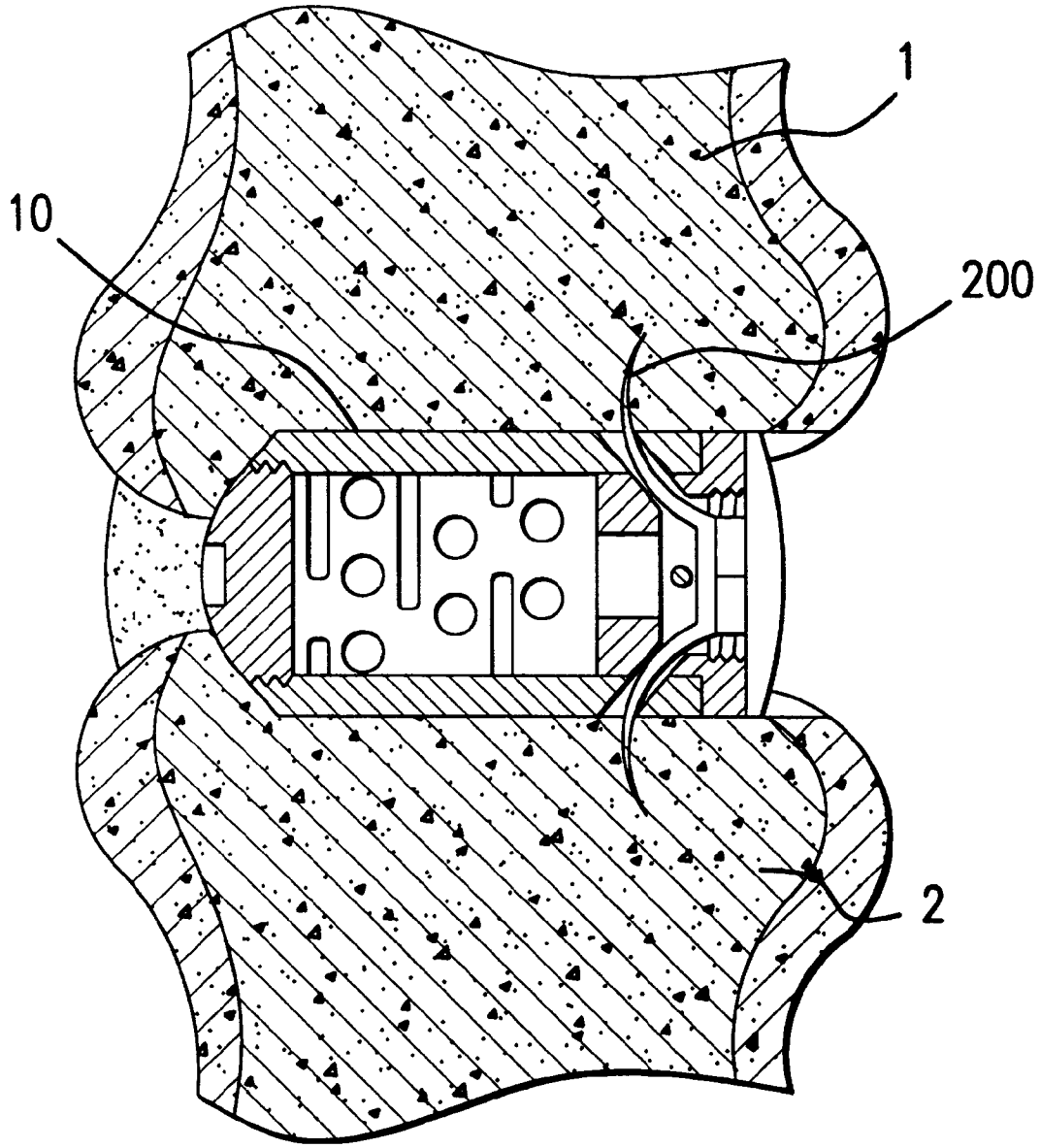

FIG.4

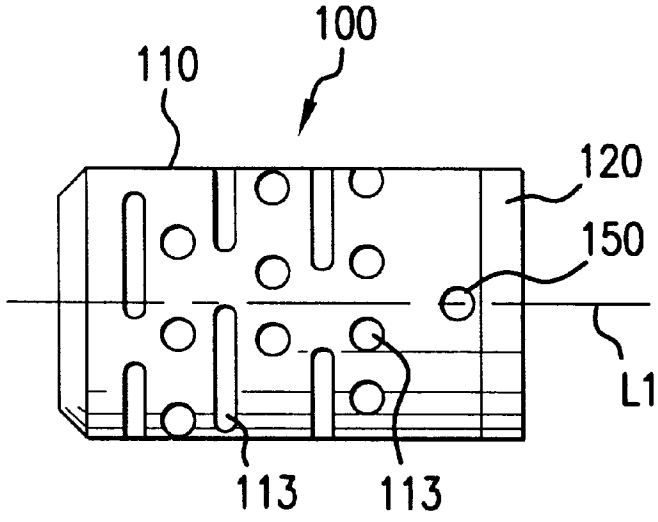

FIG.5

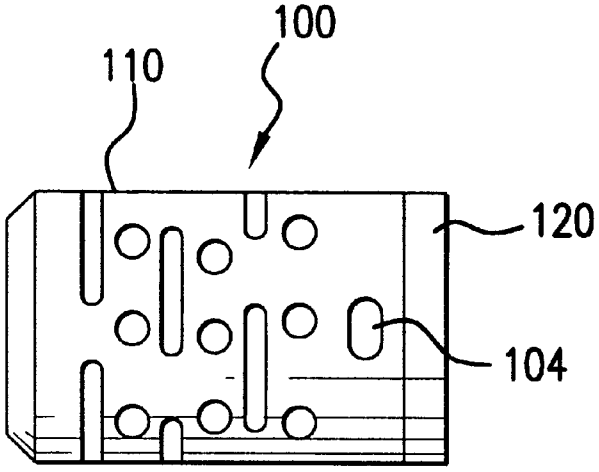

FIG.6

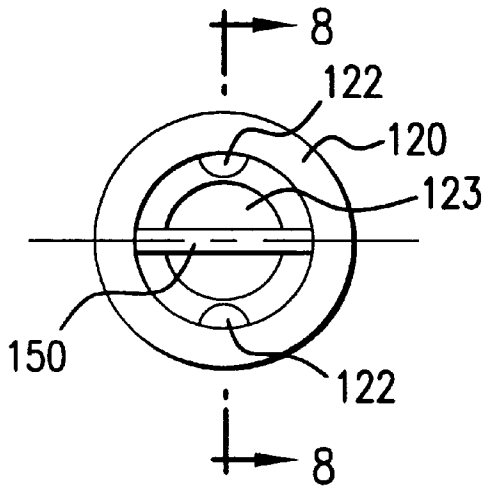
8
122
120
123
150
122
8

FIG.7

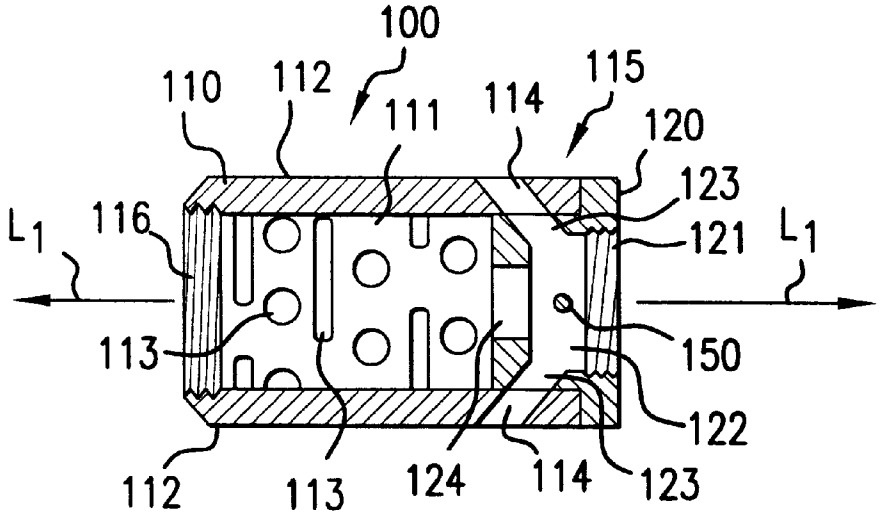
100
110
112
111
114
115
120
123
121
L1
116
L1
113
150
122
112
113
124
114
123

FIG.8

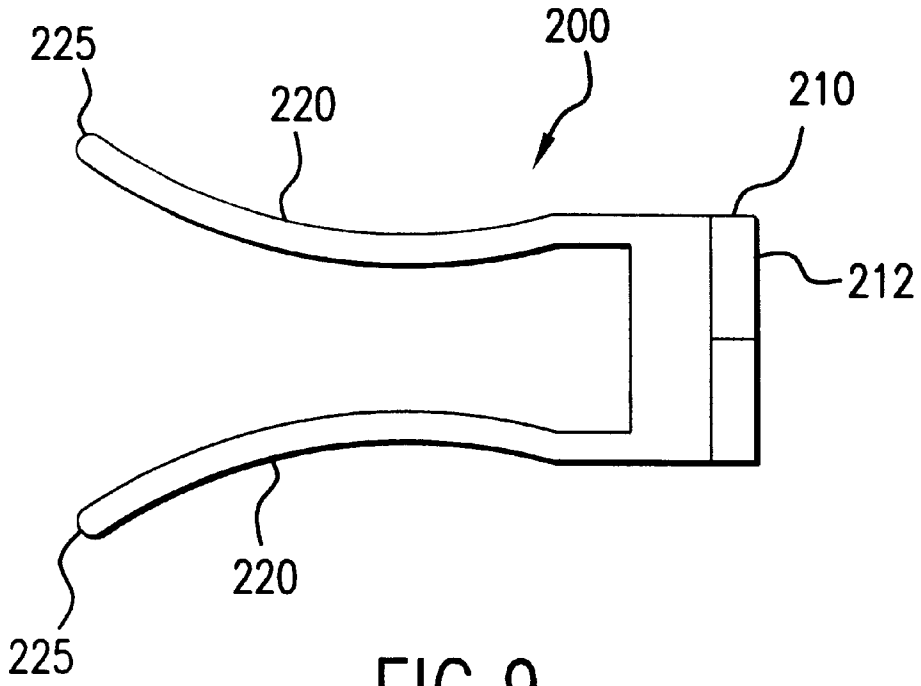

FIG.9

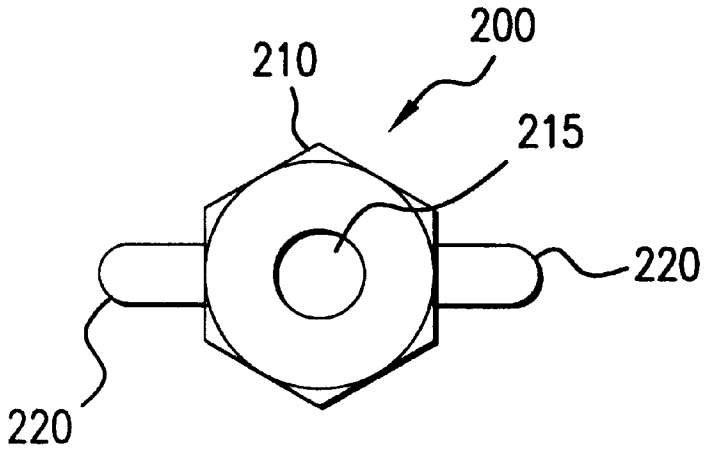

FIG.10

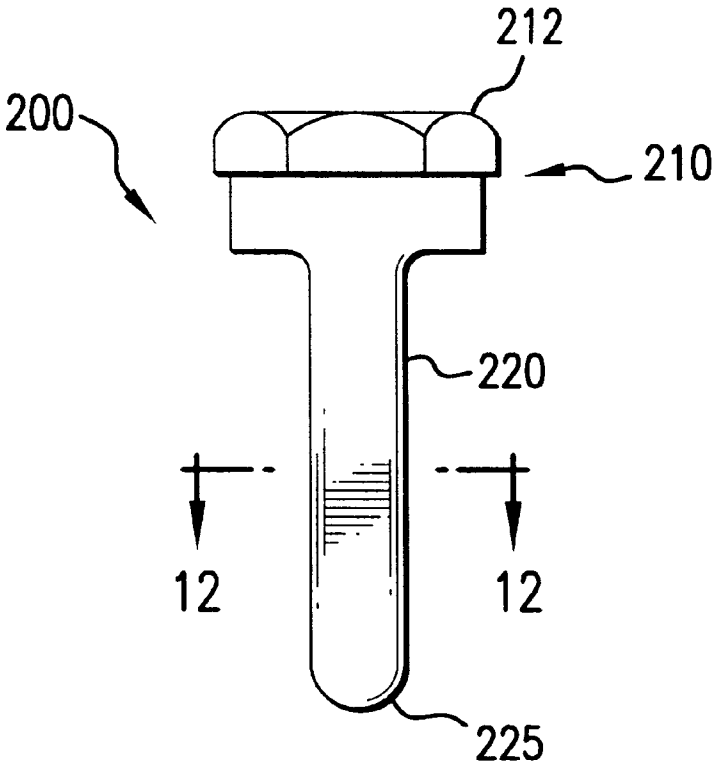

FIG.11

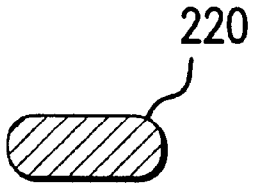

FIG.12

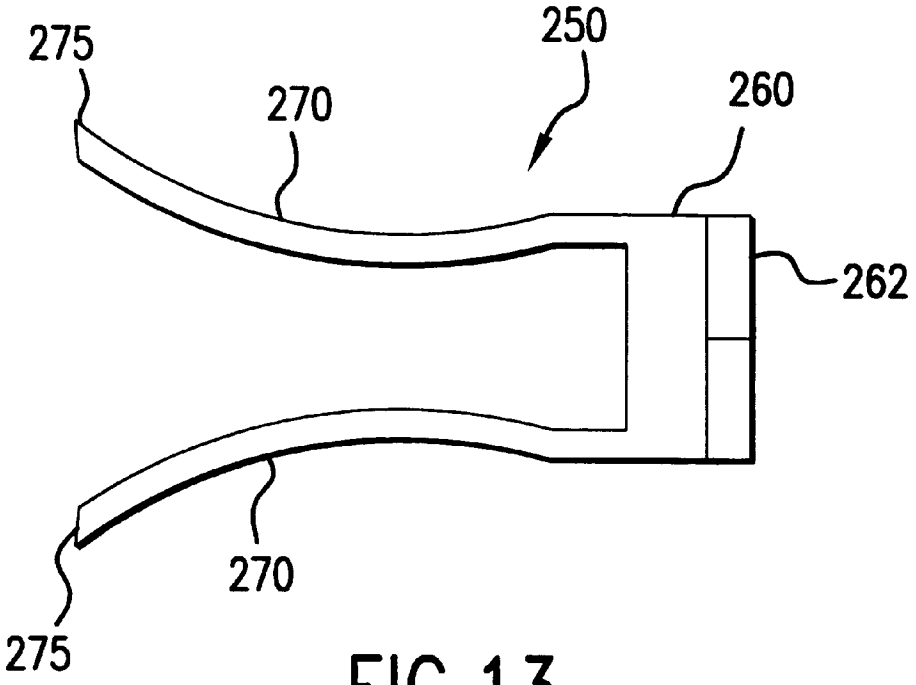

FIG.13

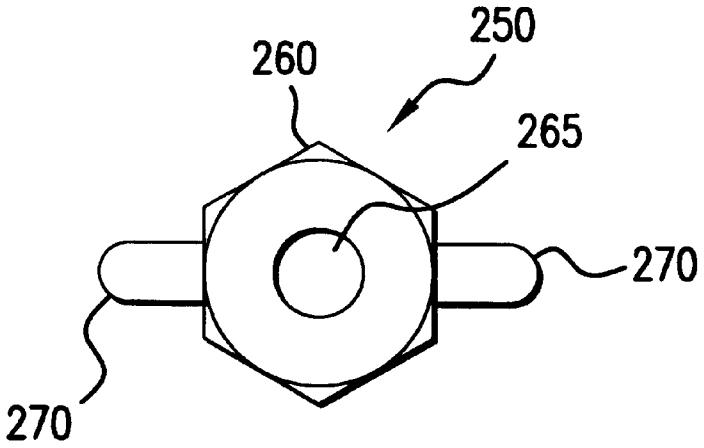

FIG.14

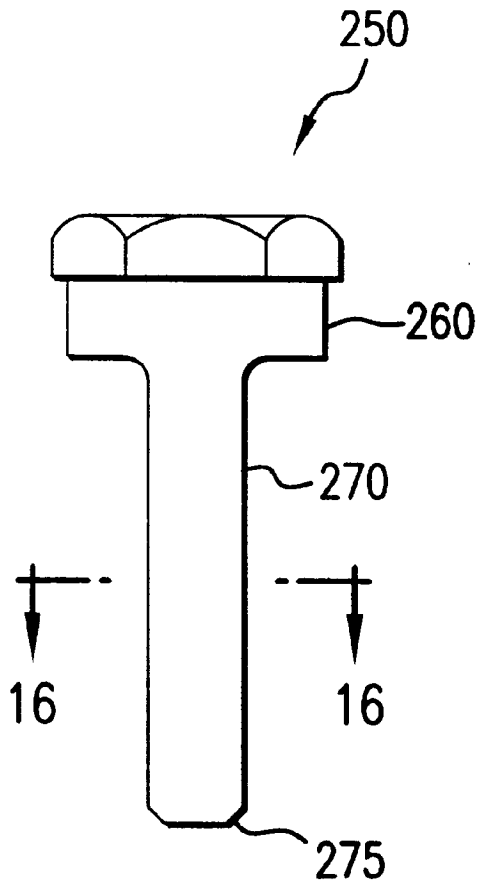

FIG.15

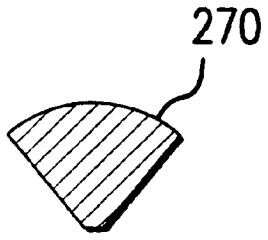

FIG.16

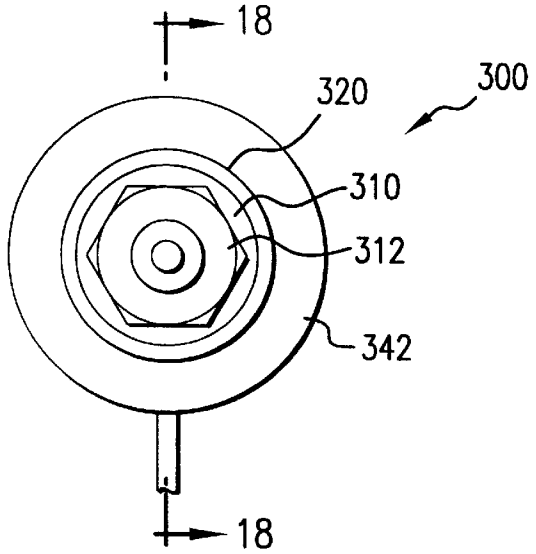
18
320
300
310
312
342
18

FIG.17

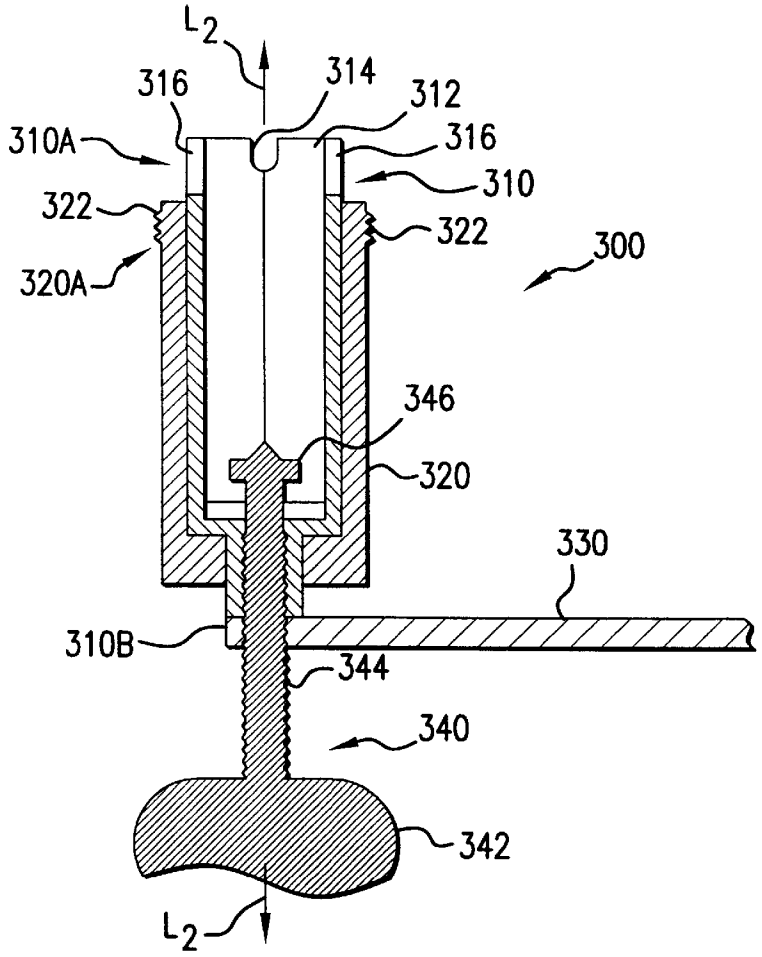
L2
316
314
312
310A
316
310
322
322
300
320A
346
320
330
310B
344
340
342
L2

FIG.18

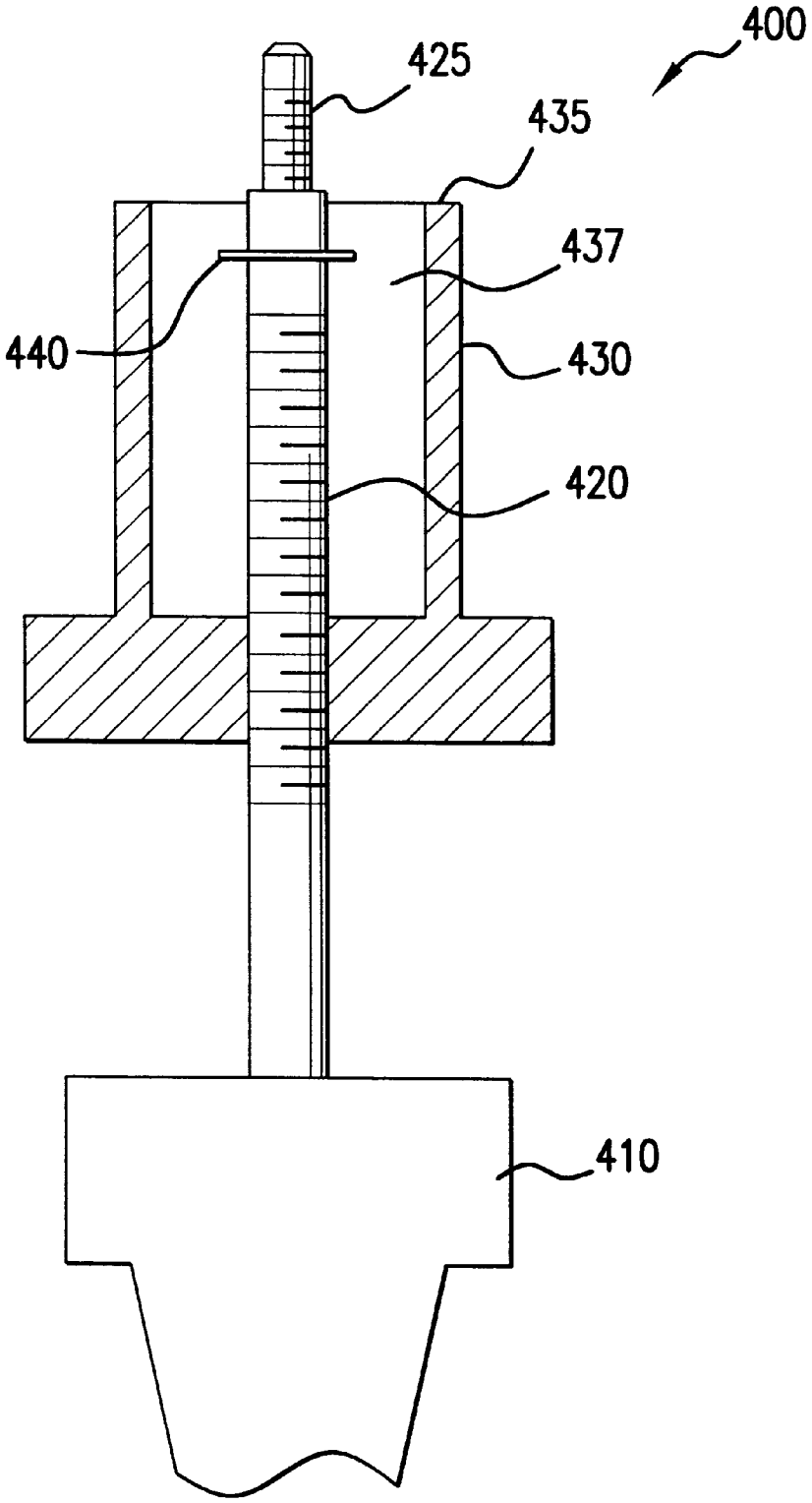

FIG.19

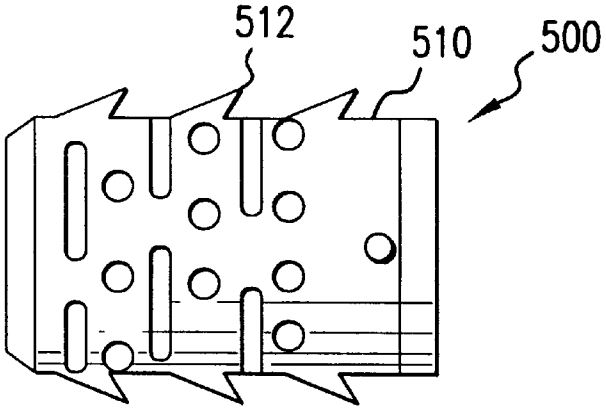

FIG.20

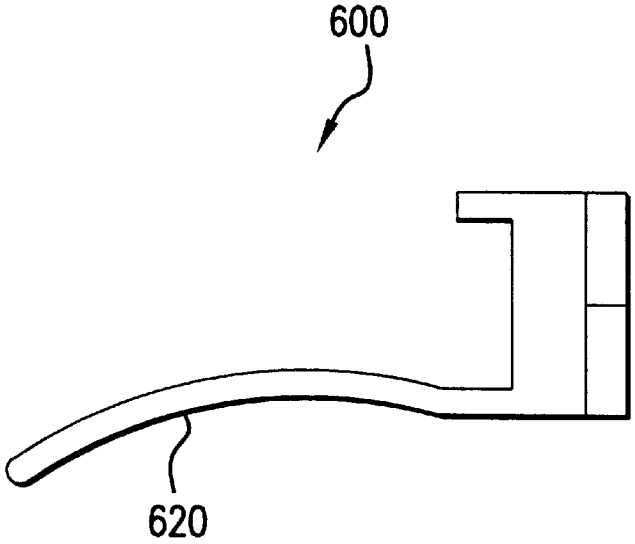

FIG.21

APPARATUS AND METHOD FOR FUSING OPPOSING SPINAL VERTEBRAE

BACKGROUND OF THE INVENTION

1. Field of the Invention

The present invention relates to an implant for use in surgical procedures for fusing adjacent bone structures and more specifically adjacent vertebrae.

2. Description of the Related Art

The fusion of adjacent bone structure is commonly performed to provide for long-term replacement to compensate for degenerative and or deteriorated disorders in bone. In many cases, low back pain can be avoided by preventing relative motion between spinal vertebrae. By fusing the contiguous vertebrae in the lumbar region, lower back pain can be abated.

Surgical techniques are known for use in spinal stabilization. Surgical techniques seek to rigidly join the vertebrae that are separated by a degenerated disk. Ideally, the surgery effectively replaces the vertebra-disk-vertebra combination with a single rigid vertebra. Various surgical techniques have been developed to approximate this ideal.

Many of the techniques begin by partially removing the degenerative disk material. Where the techniques differ is in their strategy for replacing the disc material. Some procedures fill the void left between the contiguous vertebra with bone graft. Other techniques rely on the use of an implant acting alone or in combination with bone fragments. Usually, initial stabilization is achieved by making the implant diameter slightly larger than the void between the vertebrae. Eventual fusion of the opposing bone segments results from bone growth into and through the implant.

In some cases, the above procedures have failed due to shifting of the implant between the adjacent vertebrae during the initial stabilization period, i.e., prior to fusion taking place. This translation of the implant can lead to discomfort and serious consequences for the patient due to the proximity of nerves and blood vessels in the implanted area.

Therefore, it is desirable that an improved apparatus and method be provided for fusing opposing spinal vertebrae.

SUMMARY OF THE INVENTION

An embodiment of the present invention for a spinal implant includes a body assembly and a retention member coupled to the body assembly. The retention member includes a tang where the tang is extendible from the body assembly.

In a method of the present invention, the method includes the step of inserting an implant between adjacent vertebrae with a retention member of the implant in a first retracted configuration. The method also includes the step of configuring the retention member in a second extended configuration wherein when the retention member is in its second extended configuration, a portion of a tang of the retention member extends from the implant and into one of the adjacent vertebrae.

BRIEF DESCRIPTION OF THE DRAWINGS

The various features of the invention will best be appreciated by simultaneous reference to the description which follows and the accompanying drawings, in which:

FIG. **1** is a cross-sectional view of an embodiment of a spinal cage in a first configuration in accordance with the principles of the present invention;

FIG. **2** is a cross-sectional, partially exploded view of the spinal cage of FIG. **1** in a second configuration;

FIG. **3** illustrates the spinal cage between adjacent vertebrae in its first configuration;

FIG. **4** illustrates the spinal cage between adjacent vertebrae in its second configuration;

FIG. **5** is a side view of the body assembly of the spinal cage of FIG. **1**;

FIG. **6** is another side view of the body assembly of FIG. **5**;

FIG. **7** is a top view of the body assembly of FIG. **5**;

FIG. **8** is a cross-sectional view of the body assembly as taken along line **8**—**8** of FIG. **7**;

FIG. **9** is a side view of an embodiment of a retention member for the spinal cage in accordance with the principles of the present invention;

FIG. **10** is a top view of the retention member of FIG. **9**;

FIG. **11** is another side view of the retention member of FIG. **9**;

FIG. **12** is a cross-sectional view of a tang of the retention member of FIG. **9** as taken along line **12**—**12** of FIG. **11**;

FIG. **13** is a side view of a second embodiment of a retention member for the spinal cage in accordance with the principles of the present invention;

FIG. **14** is a top view of the retention member of FIG. **13**;

FIG. **14** is another side view of the retention member of FIG. **13**;

FIG. **16** is a cross-sectional view of a tang of the retention member of FIG. **13** as taken along line **16**—**16** of FIG. **15**;

FIG. **17** is a top view of an embodiment of a deployment device that can be utilized in accordance with the principles of the present invention;

FIG. **18** is a cross-sectional view of the deployment device of FIG. **17** as taken along line **18**—**18** of FIG. **17**;

FIG. **19** is a partial cross-sectional view of an embodiment of a retraction device that can be utilized in accordance with the principles of the present invention;

FIG. **20** is a side view of an alternative embodiment of a body assembly in accordance with the principles of the present invention; and

FIG. **21** is a side view of another alternative embodiment of a retention member for the spinal cage in accordance with the principles of the present invention.

DETAILED DESCRIPTION

An embodiment for the spinal cage **10** of the present invention is illustrated in FIGS. **1** and **2**. As can be seen, and as will be described further later in this specification, the spinal cage **10** is comprised of a body assembly **100** and a retention member **200**. Body assembly **100** is comprised of body **110** and end plug **120**. Additionally, body assembly **100** may also include a distal end cap **130**.

FIG. **1** illustrates the spinal cage **10** in a first configuration where the retention member **200** is not deployed from the body assembly **100**. FIG. **2** illustrates the spinal cage **10** in a second configuration where the retention member **200** has been deployed from the body assembly **100** such that tangs **220** extend into surrounding bone structure of the patient.

As can be seen in FIG. **3**, when spinal cage **10** is in its first configuration retention member **200** is not deployed into bone portions **1** and **2**. FIG. **4** illustrates spinal cage **10** in its second configuration where retention member **200** is deployed into bone portions **1** and **2**.

As will also be further described later in this specification and as can be seen in FIGS. **17** and **18**, a deployment device **300** is utilized to configure spinal cage **10** in its second configuration where tangs **220** are deployed from body assembly **100**. A retraction device **400**, as can be seen in FIG. **19**, is utilized to return spinal cage **10** to its first configuration from its second configuration, where tangs **220** are returned to a position within body assembly **100**.

Each of the above-described components and procedures will be described in further detail below.

As discussed above, spinal cage **10** includes body assembly **100**. Body assembly **100** includes body **110**, which in this embodiment is constructed of allograft cortical bone. In alternative embodiments, body **110** could be comprised of titanium alloy or a bioceramic material.

As can be seen in FIG. **8**, body **110** is a cylindrical member and includes a hollow bore **111** which extends therethrough. The interior of body **110** is hollow to allow it to be filled with a bone growth medium prior to implantation in the patient. The preferred bone growth medium is a cancellous bone cylindrical plug harvested from the patient. The cylindrical wall **112** of body **110**, which defines bore **111**, includes a plurality of ports **113** which extend completely through wall **112**. Ports **113** may be formed in various configurations, including the circular and oval configurations illustrated. Ports **113** allow bone ingrowth, i.e., bone to grow from outside of body **110**, and thus cylindrical wall **112**, to within body **110** through ports **113**.

Body **110** also includes two slots **114** which extend through wall **112**. The two slots **114** are located on opposing sides of wall **112** and are oriented at an angle to the longitudinal axis L_1 of body cylinder **110**. As will be explained, the tangs **220** of retention member **200** are received in, and are extendable through, slots **114**.

As can be seen in FIGS. **1** and **2**, distal end cap **130** is threadedly received within a distal portion of bore **111** at the distal end **116** of body **110**. After a cancellous bone plug is inserted into the hollow interior, or bore **111**, of body **110**, end cap **130** is threaded into the internal threading included at distal end **116** of body **110**. The end cap **130** is tightened by inserting a complementary-shaped tool into a square-formed slot **132** defined by end plug **130** and further threading end cap **130** into body **110**.

End cap **130** utilizes a spherical radius on its exposed surface to prevent irritation to adjacent structures and, in its preferred embodiment, is constructed from a bioabsorbable material such as Poly-L-Lactic Acid (PLLA). End cap **130** will eventually be absorbed by the patient's body and will, thus, eventually leave the end of the cancellous bone plug inserted within body **110** exposed for further fusion to the patient's bone. An alternative material for comprising end cap **130** could be allograft cortical bone.

End plug **120** is received within a proximal portion of bore **111** at the proximal end **115** of body **110**. End plug **120**, in this embodiment, is comprised of stainless steel; however, other embodiments could be comprised of titanium alloy. In the preferred embodiment, the stainless steel end plug **120** is press-fitted into the allograft body cylinder **110**. However, if titanium alloy is utilized for body **110**, end plug **120** is integrally formed with body **110**, i.e., its features are machined into body cylinder **110**, and a single structure includes all of the features of body **110** and end plug **120**.

If two structural components are utilized for end plug **120** and body **110**, a stainless steel pin **150** is press-fitted through body cylinder **110** and end plug **120** to ensure the integrity of the assembly. Even if the body cylinder **110** and end plug **120** are integrally formed, the physical structure of pin **150** may be provided in the integral structure for purposes that will be discussed later.

End plug **120** contains internal threading **121** and a counterbore **122**. Similar to body **110**, end plug **120** also contains two slots **123**. The two slots **123** are located on opposing sides of end plug **120** and are oriented at the same angle relative to the longitudinal axis L_1 of body cylinder **110** as are slots **114** of body **110**. As will be explained, the tangs **220** of retention member **200** are received in, and are extendable through, the aligned slots **114** and **123** of the body **110** and end plug **120**, respectively. The slots **114** and **123** are aligned during the process of assembling body **110** and end plug **120**. The aligned slots are oriented 90 degrees from the longitudinal axis of pin **150**.

FIGS. **9–12** illustrate a first embodiment for a retention member of the present invention. In this embodiment, retention member **200** is a one piece stainless steel structure consisting of a body **210**, which defines a threaded hole **215** therein, and two tangs **220**. The retention member **200** could also be constructed of titanium alloy or a combination of titanium alloy and nitinol if the other spinal cage components are of titanium alloy. In the embodiment of FIGS. **9–12**, the retention member's tangs **220** have an oval cross-section and a rounded end at the distal tip **225** of each tang **220**. As will be described later in this specification, and as can be seen in FIG. **2**, the tangs **220** are deformable such that they are able to extend from body assembly **100** as retention member **200** is moved further into body assembly **100**.

Tangs **220** are pre-formed as illustrated in FIG. **9**. Body **210** is cylindrical and includes a multi-faceted flange **212** at its proximal end, which is illustrated as being hexagonal in this embodiment. Threaded hole **215** extends through body **210** and, as will be further explained later in this specification, is utilized for reversing the deployment of retention member **200** from body assembly **100** in the event that the spinal cage must be removed from the patient.

Retention member **200** is pre-assembled into body assembly **100**, as can be seen in FIG. **1**. As can also be seen in FIG. **1**, retention member **200** is assembled into body assembly **100** with tangs **220** fitted into the slots defined by the body assembly.

FIGS. **13–16** illustrate a second embodiment for a retention member of the present invention. Retention member **250** of this embodiment also includes a body **260**, which defines a threaded hole **265** therein, and two tangs **270**. As was body **210** of the previously discussed embodiment, body **260** is also cylindrical and includes a multi-faceted flange **262** at its proximal end, which is also hexagonal in this embodiment. However, the retention member **250** of this embodiment includes tangs **270** which have a triangular cross-section and a sharp end at the distal tip **275** of each tang **270**. Retention member **270** may be comprised of the same materials as retention member **200**.

A deployment device **300**, as illustrated in FIGS. **17** and **18**, is used to hold and insert the spinal cage **10** as well as to deploy the retention member **200**, as will be explained later in this specification. Deployment device **300** includes a body **310** which has a multi-faceted bore **312** that is complementary in shape to the multi-faceted flange **212** of body **210** of retention member **200**. In this embodiment, and as can be seen in FIG. **17**, the bore **312** has a hexagonal shape. Multi-faceted flange **212** is slidably receivable within bore **312**. Distal end **310**A of body **310** includes an anti-rotation slot **314** and retention member tang slots **316**. As will be explained, pin **150** is received within slot **314** and tangs **220** are received within slots **316**.

Deployment device **300** also includes collar **320** which is free to rotate and translate about body **310** but is limited in translation by torque arm **330**. Collar **320** contains external threads **322** at a distal end **320**A of collar **320** which are threaded into the internal threads **121** of end plug **120** during use of deployment device **300**. Torque arm **330** is attached to a proximal end **310**B of body **310** and extends perpendicular to the longitudinal axis L_2 of body **310**. A handle **340** includes a hand-grip portion **342** and an externally threaded shaft **344**. The external threads of threaded shaft **344** threadedly engage with the internal threads included at the proximal end **310**B of body **310**. An anvil **346** is included at the distal end of shaft **344**.

The use of spinal cage **10** and deployment device **300** will now be further described. The spinal cage is positioned such that the tangs **220** of retention member **200** are deployed parallel to the spinal axis. The deployment device **300** is keyed and marked to facilitate this orientation. The keying of the deployment device **300** is accomplished by slot **314** interfacing with pin **150**. Since torque arm **330** is located 90° angularly with respect to slot **314** and torque arm **330** is marked "align parallel to spinal axis for fixation", the deployment device **300** is keyed and marked to assure that the tangs **220** deploy parallel to the spinal axis.

The deployment device **300** is fitted to the spinal cage **10** when the spinal cage is in its first configuration as shown in FIGS. **1** and **3**. The body **310** of deployment device **300** is positioned over the protruding body **210** of retention member **200** such that the retention member body **210** is slidingly received within bore **312** of body **310** of deployment device **300**. The complementary hexagonal shapes of bore **312** of deployment device **300** and flange **212** of body **210** of retention member **200** allow for easy alignment of deployment device **300** and retention member **200**. The slots **316** of body **310** of deployment device **300** are aligned by the operator with the retention member tangs **220** such that, as body **310** of deployment device **300** is pushed into counterbore **122** of end plug **120**, the tangs **220** are received within the slots **316**; this in-turn will the align anti-rotation slot **314** of body **310** with pin **150** of body assembly **100**. Insertion of pin **150** within slots **314** will prevent rotation of body **310**.

Collar **320**, which contains external threading **322** at a distal end **320**A thereof, is threaded into the internal threads **121** of end plug **120**. Body **310** of deployment device **300** is now captivated and restrained against further translation by collar **320** and restrained against further rotation by pin **150**.

When torque arm **330** is held parallel to the spinal axis, which is aligned perpendicular with the longitudinal axes of the body assembly **100** and deployment device **300**, the retention member's tangs **220** will deploy parallel to the spinal axis. To deploy the tangs **220**, the torque arm **330**, which is part of body **310**, is held with one hand of the operator and handle **340** is rotated clockwise with the operator's other hand. As handle **340** is rotated, the external threads on shaft **344** interact with the internal threads of body **310** at the proximal end **310**B of body **310** to cause anvil **346** to progress towards the distal end **310**A of body **310** and engage with body **210** of retention member **200**. Further distal movement of anvil **346** causes retention member **200** to move distally towards the interior of the body assembly **100** which inturn forces tangs **220** out through the aligned slots **114** of body **110** and slots **123** of end plug **120**, and thus out through body assembly **100** and into the cancellous bone of the vertebra. This process is continued until the retention member body **210** engages with pin **150**.

Tangs **220** are deformable such that, as they are forced out of body assembly **100** through the aligned slots **114**, **123**, they engage with the walls that define the slots. Further distal movement of the tangs **220** through the slots deform the tangs as they are pushed through the slots and extended from body assembly **100**.

It can be understood that during deployment of the retention member **200**, because the faceted body **210** of the retention member, e.g., the hexagonal shape, was slidingly received in the complementary-formed faceted bore **312** of the deployment device body **310**, rotation of the retention member body **210** was prevented thus ensuring against any twisting or bending of the retention member tangs **220** during their deployment.

FIGS. **2** and **4** illustrate the spinal cage **10** in its second configuration where it is fully deployed into cancellous bone within the cortical bone of the vertebra and the implant is restrained from translation or rotation. Collar **320** is then unthreaded from the spinal cage **10**, and more specifically from end plug **120**, and the deployment device **300** is removed.

After removal of the deployment device **300**, proximal end cap **140**, as can be seen in FIG. **2**, is threaded into the threaded hole of the retention member's body, e.g., hole **215** of body **210** for the embodiment of retention member **200** of FIGS. **912**. End cap **140** is utilized to close the trailing end of the spinal cage **10** and avoid irritation to adjacent structures. The exposed surface of end cap **140** has a spherical radius and contains an internal square drive feature, similar to square-formed slot **132** for distal end cap **130**, for use in tightening the proximal end cap **140** in retention member **200**. The threads of end cap **140** are slightly oversized to provide a self-locking feature and prevent inadvertent loosening of the end cap from the retention member. The preferred embodiment of end cap **140** is constructed from Ultra High Molecular Weight Polyethylene (UHMWPE) material. These threads, and end cap **140** as a whole, also prevent any ingrowth into the threaded hole of the retention member to make future removal of the retention member easier, if necessary for any reason.

The retention member's deployment of tangs **220** can be reversed, if necessary, for removal of the spinal cage **10**. In order to retract the tangs **220**, the retraction device **400**, as shown in FIG. **19**, is used. Retraction device **400** includes a handle **410**, an externally threaded shaft **420**, which has a threaded stem **425** on a distal end thereof, and a collar **430**. Threaded shaft **420**, and thus threaded stem **425**, are rigidly attached to handle **410**. Collar **430** is threadedly engaged with threaded shaft **420**. A snap-ring **440** may be included on shaft **420** to prevent collar **430** from being inadvertently threaded off of shaft **420**.

To retract tangs **220**, end cap **140** is first unthreaded, and thus removed, from retention member **200**. The user then uses retraction device **400** to retract the tangs. The user holds handle **410** and turns it so as to engage threaded stem **425** into the threaded hole of the body of the retention member, e.g., hole **215** of body **210**. When threaded stem **425** is fully engaged in threaded hole **215**, handle **410** is restrained against further rotation and collar **430** is rotated clockwise to thread it distally on threaded shaft **420**, causing it to advance toward the spinal cage **10** due to interaction of the collar's internal threading with the shaft's external threading. As stated above, snap ring **440** prevents collar **430** from being inadvertently removed from shaft **420**. As collar **430** advances toward the spinal cage **10**, its leading edge **435** will contact the end plug **120**. Further rotation of collar **430** on

shaft **420**, and the contact between collar **430** and end plug **120**, will cause a reaction force on the retention member **200** and will move retention member **200** in the direction R as shown in FIG. **2**. The movement of retention member **200** in this direction will retract tangs **220** from extending outside of body assembly **100** and force the tangs back through slots **114**, **123**. Further movement of retention member **200** in direction R will pull it from body assembly **100** and into the open area **437** within collar **430**. Through the above-described procedure, the spinal cage **10** can now be removed from the patient's body.

Whereas the above description discussed use of the embodiment of FIGS. **9–12** for the retention member, it is understood that alternative embodiments for the retention member, including the alternative embodiment illustrated in FIGS. **13–16**, can be utilized in the present invention.

The disclosed embodiments are illustrative of the various ways in which the present invention may be practiced. Other embodiments can be implemented by those skilled in the art without departing from the spirit and scope of the present invention. For example, external threading **512** may be included on a body **510** of a body assembly **500**, as is illustrated in FIG. **20**, to further enhance the fusing of the adjacent vertebrae. Additionally, whereas the retention member is illustrated as including two tangs, the present invention may be practiced by only including one tang on the retention member. FIG. **21** illustrates an alternative embodiment for a retention member **600** that only includes one tang **620**. All of the other features of retention member **600** are similar to those as described for the embodiments of retention members **200** and **250**.

What is claimed is:

1. A spinal implant, comprising:

a body assembly; and

a retention member coupled to the body assembly, the retention member including a body, a multi-faceted flange attached to a proximal end of the body, and a first tang extendible through the body assembly.

2. The spinal implant of claim **1** wherein the retention member includes:

a second tang, wherein the first tang and the second tang extend from a distal end of the body.

3. The spinal implant of claim **2** wherein the first and second tangs are formed of a deformable material.

4. The spinal implant of claim **3** wherein the first and second tangs are extendible though slots included in the body assembly.

5. The spinal implant of claim **1** wherein the body assembly includes:

a body, the body including a cylindrical wall defining a bore and the cylindrical wall defining a plurality of apertures extending therethrough; and

an end plug, the end plug coupled to the body.

6. The spinal implant of claim **5** wherein the end plug includes an internally threaded portion and a counterbore.

7. The spinal implant of claim **5** further comprising a pin, the pin received through the body and the end plug.

8. The spinal implant of claim **5** wherein the body assembly further includes a distal end cap coupled to a distal end of the body.

9. In combination with the spinal implant of claim **1**, a deployment device couplable to the spinal implant, the deployment device including:

a body defining a bore, the retention member slidably receivable within the bore;

a collar rotatable and translational about the body;

a torque arm attached to a proximal end of the body and extending perpendicular to a longitudinal axis of the body; and

a handle extending through the proximal end of the body and within the bore.

10. The deployment device of claim **9** wherein the handle includes:

a hand-grip portion;

an externally threaded shaft attached to the hand-grip portion; and

an anvil attached to a distal end of the externally threaded shaft and disposed within the bore.

11. In combination with the spinal implant of claim **1**, a retraction device couplable to the spinal implant, the retraction device including:

a collar defining a bore, the retention member slidably receivable within the bore;

an externally threaded shaft, the shaft threadedly engaged with the collar and including a threaded stem on a distal end thereof; and

a handle rigidly attached to the externally threaded shaft.

12. The retraction device of claim **11** further comprising a snap-ring disposed on the externally threaded shaft and within the bore.

13. The implant of claim **1**, wherein said body defines a threaded aperture therein.

14. An implant, comprising:

a body assembly; and

a retention member including a body, a multi-faceted flange attached to a proximal end of the body, and a tang, the retention member receivable within the body assembly;

wherein when the retention member is in a first configuration, the tang is retracted within the body assembly and wherein when the retention member is in a second configuration, a portion of the tang is extended through the body assembly.

15. The implant of claim **13** wherein the tang is comprised of a deformable material.

16. The implant of claim **13** wherein the body assembly includes:

a body, the body including a cylindrical wall defining a bore and the cylindrical wall defining a plurality of apertures extending therethrough; and

an end plug, the end plug coupled to the body.

17. The implant of claim **15** further comprising a pin, the pin received through the body and the end plug.

18. The implant of claim **15** wherein the body includes threading on an external surface thereof.

19. A method of fusing adjacent vertebrae comprising the steps of:

inserting an implant between the adjacent vertebrae with a retention member of the implant in a first retracted configuration; and

configuring the retention member in a second extended configuration wherein when the retention member is in its second extended configuration, a portion of a tang of the retention member extends from the implant and into one of the adjacent vertebrae.

20. The method of claim **18** wherein when the retention member is in its second extended configuration, a portion of a second tang of the retention member extends from the implant and into the other of the adjacent vertebrae.

21. The method of claim **19** wherein the step of configuring the retention member in the second extended configuration includes the step of deforming the first and second tangs.

* * * * *