CONF-960767--18 SAND96-1944C

A VERSATILE DIGITAL VIDEO ENGINE FOR SAFEGUARDS AND SECURITY APPLICATIONS

William R. Hale
Charles S. Johnson
Sandia National Laboratories
Albuquerque, NM 87185

Paul DeKeyser
Fast Forward Video
Irvine, CA 92714

Abstract

The capture and storage of video images have been major engineering challenges for safeguard and security applications since the video camera provided a method to observe remote operations. The problems of designing reliable video cameras were solved in the early 1980's with the introduction of the CCD (charged couple device) camera. The first CCD cameras cost in the thousands of dollars but have now been replaced by cameras costing in the hundreds.

The remaining problem of storing and viewing video images in both attended and unattended video surveillance systems and remote monitoring systems is being solved by sophisticated digital compression systems. One such system is the PC-104 three card set which is literally a "video engine" that can provide power for video storage systems. The use of digital images in surveillance systems makes it possible to develop remote monitoring systems, portable video surveillance units, image review stations, and authenticated camera modules. This paper discusses the video card set and how it can be used in many applications.

Introduction

Up until the early 1990s, it was very difficult and expensive to develop systems which could digitize and store video images. Most all video images were stored in analog formats either on disk or on tape. The new developments in image compression algorithms, dedicated image compression integrated circuits, and high speed, large capacity hard drives came together to permit the development of computer image processing products. Individual manufacturers began to build video compression cards for PC, Apple, and Amiga computers. All of these cards were built to fit in the computer, and hence are not very compact nor suitable for use in many surveillance applications.

Sandia National Laboratories (SNL) in a joint effort with Fast Forward Video(FFV) have developed an image processing module that is small, compact, and versatile. It is, in fact, a versatile digital video engine that can be used in many different applications. The original application for SNL was to provide a module that was small enough to fit into a video camera housing so that the video image could be compressed and authenticated in housing prior to being transmitted out of the housing. This development effort resulted in the product sold by FFV as the Recon 11 Digital Video Subsystem. The Recon 11 is a repackaged FFV image compression card used in a standard PC computer. It is a highly compressed package using three 8-layer printed circuit boards with components on both sides of the three boards. The boards conform to the PC-104 specifications which permit the RECON 11 to be used with other PC-104 products.

The Recon 11 cards have their own SCSI-2 interface that allows them to store and retrieve digital images from hard drives or

DISTRIBUTION OF THIS DOCUMENT IS UNLIMITED MASTER

Zaxcom, Inc. Exhibit 2018
RØDE Microphones, LLC et. al v. Zaxcom, Inc.
Page 1 of 8

DISCLAIMER

Portions of this document may be illegible in electronic image products. Images are produced from the best available original document.

any other SCSI device. The cards connected to fast hard drives have the capability of handling broadcast quality video up to realtime video rates (25/30 frames per second). They can record and store many still images with instantaneous access to any one. The Recon 11 also has a number of other interfaces in addition to the SCSI interface. The interfaces are ISA bus, Ethernet, and RS-422/485 serial. The Recon 11 has an embedded 386 microprocessor with 256 KB of flash memory and 256 KB of SRAM (Static Random Access Memory) to handle the video compression parameters and the authentication algorithm.

The Recon 11 compresses the video images using the JPEG algorithm and can perform circular record functions where images are put into a solid state buffer. It produces an image format that can be directly displayed on a computer monitor without any specialized hardware. The Recon 11 can also decompress the images and display them in their original video format.

The Recon 11, first used by SNL, was integrated into a system that is called the Image Compression and Authentication Module (ICAM). The ICAM uses the video cards, a FFV network controller card (NCC), and a standard PC-104 power supply to convert 12 volts dc to 5 volts dc for operation of the boards. The versatility of the Recon 11 permitted SNL to also develop a second ICAM configuration using another PC-104 network board (CA386-NI) built by Coactive Aesthetics, Incorporated. Both NCC and CA386-NI cards have interfaces to the Echelon local operating network (LON).

Applications

The Recon 11 and a SCSI hard drive as shown in figure 1, can be used as the heart of a video surveillance system. The Recon 11 has standard interfaces that allow it to be connected to editing systems using the Sony protocol or Control L protocol. The configuration can record images up to realtime rates. Figure 2 shows a Video Storage Unit in which the Recon 11 has been installed with the NCC card and a processor card to provide an independent video storage function.

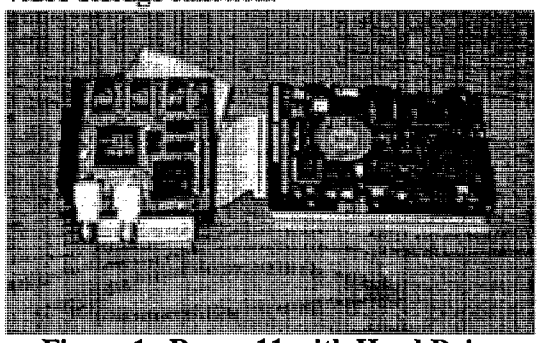

Figure 1. Recon 11 with Hard Drive

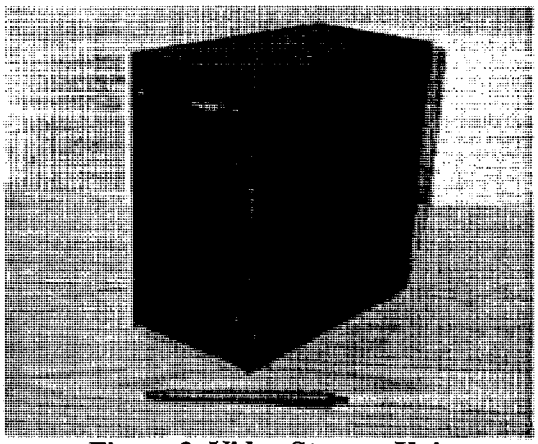

Figure 2. Video Storage Unit

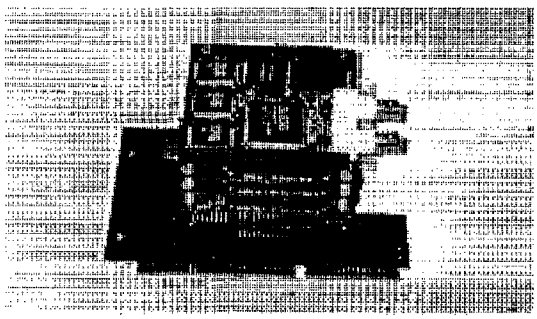

Figure 3. Recon 11 on Adapter Card

The Recon 11 can be mated with a number of other PC or PC-104 cards. Figure 3

Zaxcom, Inc. Exhibit 2118
RØDE Microphones, LLC, et. al v. Zaxcom, Inc.
Page 3 of 8

shows that the card stack can be installed in a PC with a card adapter.

ICAM Applications

Figure 4 shows the Recon 11 in an ICAM configuration. Parameters for initialization and control signals for the ICAM are sent over the LON. The images from the ICAM can also be transferred over the LON. A high speed data transfer option also exists with the NCC configuration. The ICAM is capable of working as a stand alone unit, or it can be integrated into a network of other cameras. As a stand alone unit it sends its video images directly to a central computer for storage. A number of ICAMs can be multiplexed on a single cable. In this case, images are captured by each ICAM and held until commands are received for an individual image to be transmitted for review or storage.

The ICAM can capture images on a time interval basis or upon receipt of a trigger signal from another sensor on the network. An ICAM which collects images based on other sensor signals forms the basis of an intelligent "front end" image collection system. The burden of image review associated with present video systems is reduced by only recording the images with significant action. The Recon 11 cards, used in the ICAM, can also be used to decompress and display the compressed images on a NTSC/PAL monitor.

Figure 5 shows the ICAM installed into a camera housing like the camera housings used by the International Atomic Energy Agency. Figure 6 shows the camera housings with the cover installed.

When a network of cameras are required, a large number of cameras with ICAMs can be attached to a single coaxial cable or a LON cable. Images are captured by each ICAM and stored until the images are transmitted to one or more computers which can be connected to the same cable. The ICAMs can capture images on a time interval basis or upon receiving a trigger from another type of sensor on the integrated network. A network of ICAMs that collects selective images based on other sensor signals can form the basis of

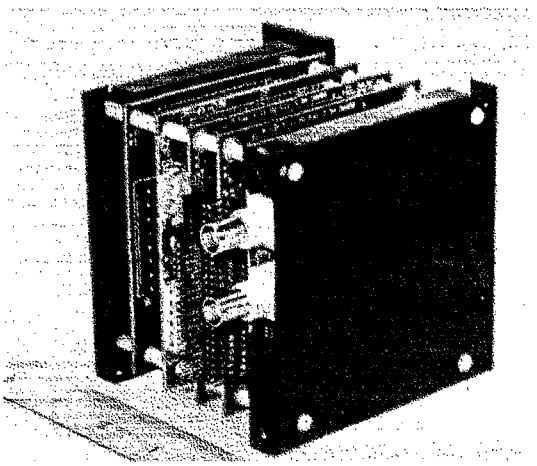

Figure 4. Image Compression and Authentication Module.

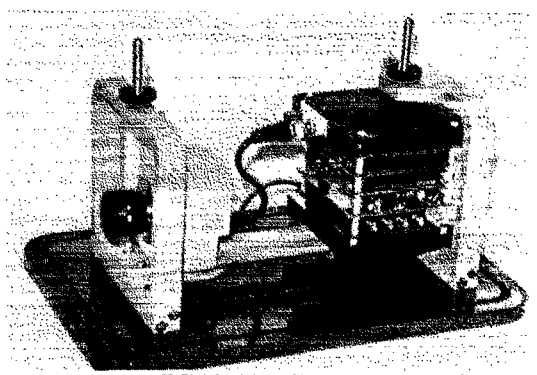

Figure 5. ICAM in Camera Housing.

Zaxcom, Inc. Exhibit 2118
RØDE Microphones, LLC, et. al v. Zaxcom, Inc.
Page 4 of 8

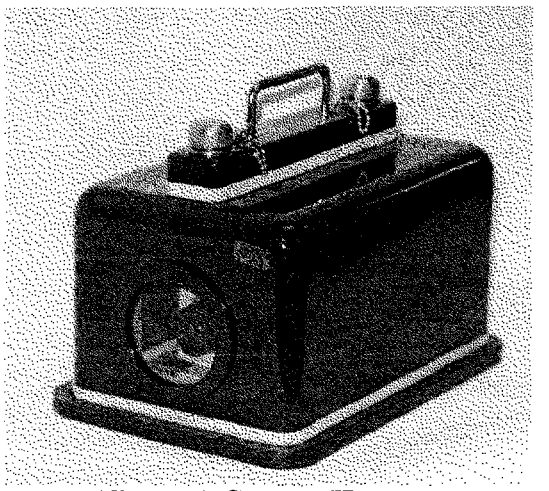

Figure 6. Camera Housing

an intelligent "front end" image collection system, which reduces the review burden of present time lapse video systems.

Technical Features

The NCC adds a number of special features that makes the ICAM a very flexible piece of surveillance hardware. The special features include an embedded 386 microprocessor, a local area network integrated circuit, RS-485 network interface, an ISA bus interface, and a high speed serial digital interface that can be multiplexed at rates up to two megabits per second (or 250 kilobytes per second). A daughter board for the NCC makes it possible to add the free topology interface to the ICAM. The NCC can also transmit images over the LON interface. A block diagram of this configuration is shown in figure 7. The data from the NCC configuration, shown in figure 8, can be received by a second NCC installed in a PC computer.

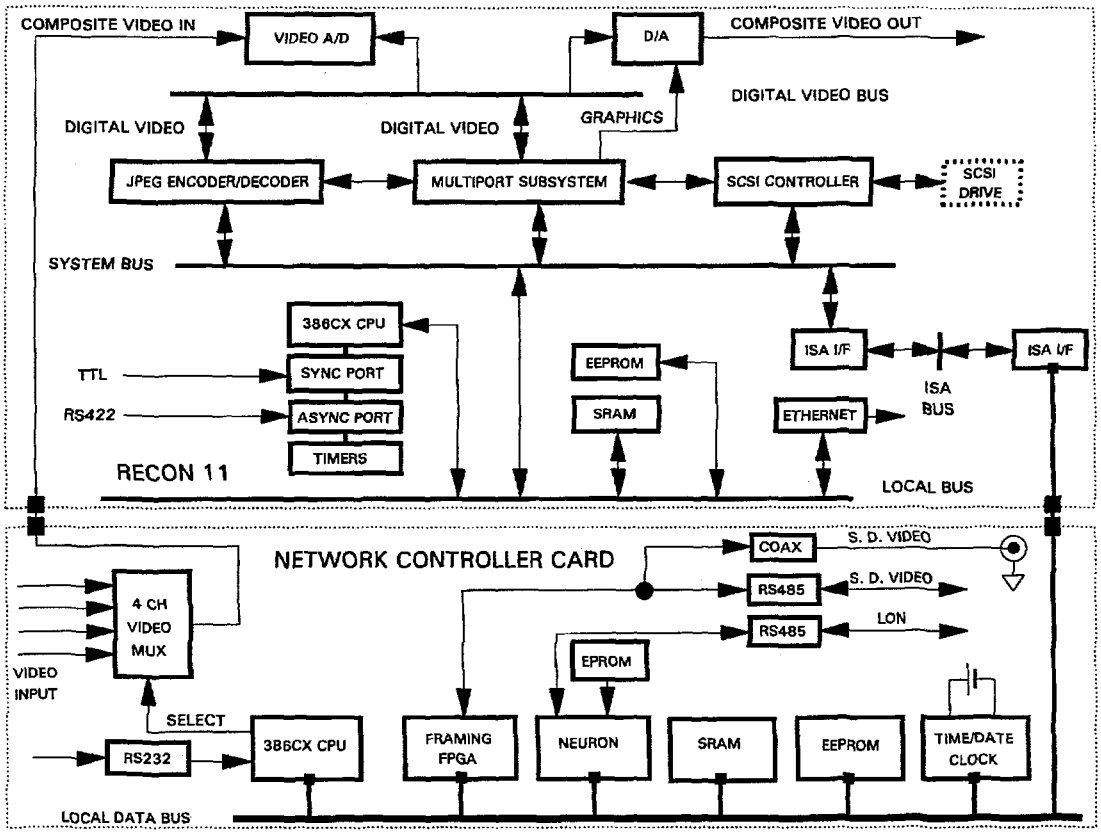

Figure 7. ICAM - NCC Configuration

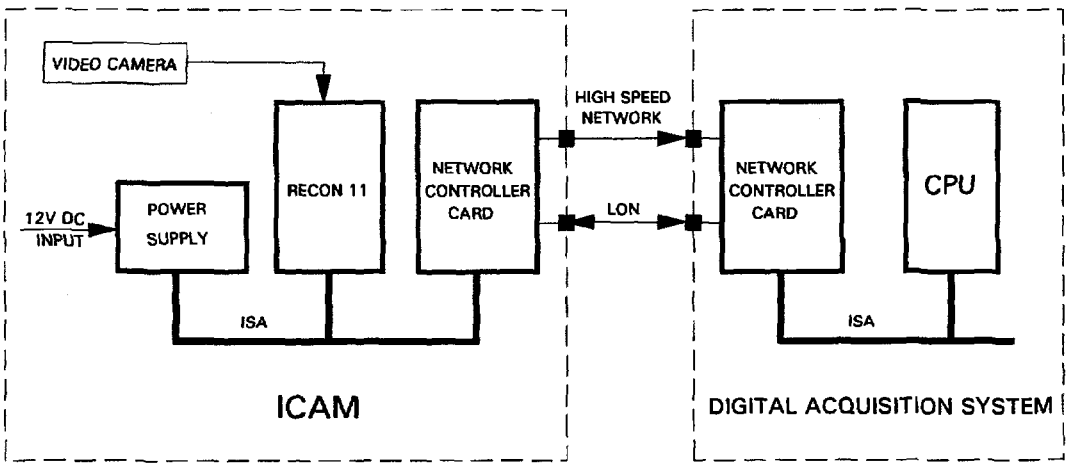

Figure 8. NCC Configuration Block Diagram

Zaxcom, Inc. Exhibit 2118
RØDE Microphones, LLC, et. al v. Zaxcom, Inc.
Page 6 of 8

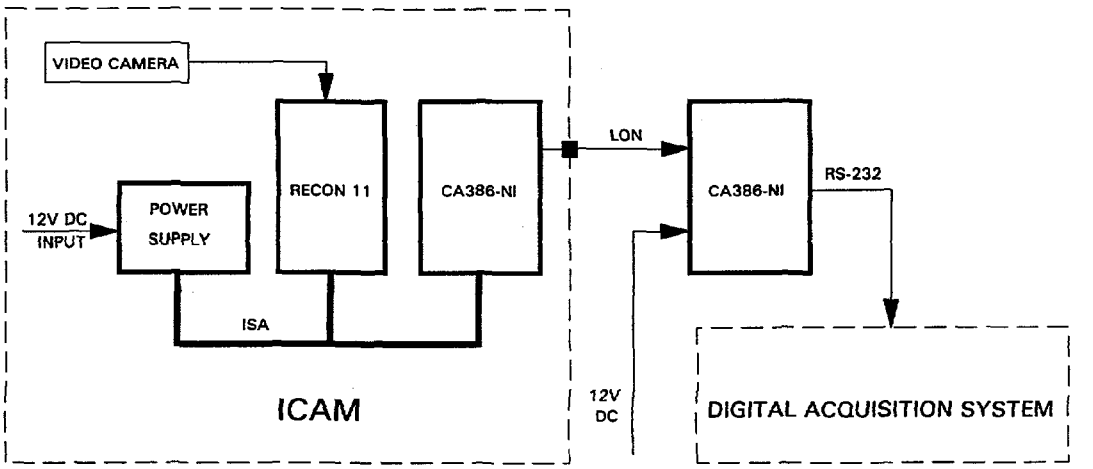

Figure 9. CA386-NI Configuration Block Diagram

The CA386-NI card also has a 386 embedded processor to provide additional power to the network card. It is only available with the Echelon free topology interface. It interfaces to the Recon 11 cards through a PC-104 ISA bus. The CA386-NI is slightly larger than a standard PC-104 card and hence requires more space for an installation in a camera housing. The CA386-NI card has two RS-232 serial ports which permits it to be connected to a data collection computer and serves as a buffer between the LON and the computer. The CA386-NI card is also used in a Data Collection Module which contains a four megabyte memory so it can collect on hold a series of images before transferring them. The CA386-NI configuration is shown in figure 9. It can only transmit images from the Recon 11 over the LON.

Summary

The Recon 11 performs the function of being a versatile video engine with a wide range of capabilities which can be implemented as the central building block for many digital video surveillance systems. Not only can it be installed into camera housings, but it can be used as the recording module for portable digital recorders and portable digital cameras. The flexibility of the Recon 11 makes it possible to both capture and display video images.

By adding controller cards which have both the neuron IC and a 386 microprocessor, allows the Recon 11 to be used as a powerful digital video surveillance unit. Through various software programs the Recon 11 can offer many options for future international safeguards applications.

References

1. Charles S. Johnson, "Optical Surveillance Equipment for the Late 1990's", *INMM 31st Annual Proceedings,* July 1990, Vol.XIX, pp 548-551.
2. H. G. Wagner, "Trends in Digital Video Surveillance at Euratom Safeguards", *INMM 34th Annual Meeting,* July 1993, Vol. XXII, pp 723-730.
3. Charles S. Johnson, "Application of Digital Compression Techniques to Optical Surveillance Systems", *INMM 32nd Annual Proceedings,* July 1991, Vol.XX, pp 841-845.
4. Charles S. Johnson, and Julian Whichello, "Adapting Digital Video Technology to the Surveillance Requirements of the IAEA", *INMM 32nd Annual Proceedings,* July 1991, Vol.XX, pp 846-851.
5. Cheryl Rodriguez, J. E. Brown, Peter Chare, John Goerten, and Hans Wagner, "Unattended Digital Video Surveillance: A System Prototype

Zaxcom, Inc. Exhibit 2118
RØDE Microphones, LLC, et. al v. Zaxcom, Inc.
Page 7 of 8

for Euratom Safeguards", *INMM 35th Annual Proceedings,* July 1994, Vol.XXIII, pp 1024-1029.
6. K. J. Gartner, J. Whichello, "Digital Image Surveillance for IAEA Safeguards", *INMM 35th Annual Proceedings,* July 1994, Vol.XXIII, pp 1018-1023.
7. Majid Rabbani, and Paul W. Jones, "Digital Image Compression Techniques", SPIE Optical Engineering Press, Bellingham, WA. (1991).
8. William B. Pennebaker, and Joan L. Mitchell, "JPEG Still Image Data Compression Standard", Van Nostand Reinhold, New York, NY. (1993).

This work was supported by the United States Department of Energy under contract DE-AC04-94AL85000.

DISCLAIMER

This report was prepared as an account of work sponsored by an agency of the United States Government. Neither the United States Government nor any agency thereof, nor any of their employees, makes any warranty, express or implied, or assumes any legal liability or responsibility for the accuracy, completeness, or usefulness of any information, apparatus, product, or process disclosed, or represents that its use would not infringe privately owned rights. Reference herein to any specific commercial product, process, or service by trade name, trademark, manufacturer, or otherwise does not necessarily constitute or imply its endorsement, recommendation, or favoring by the United States Government or any agency thereof. The views and opinions of authors expressed herein do not necessarily state or reflect those of the United States Government or any agency thereof.

Zaxcom, Inc. Exhibit 2118
RØDE Microphones, LLC, et. al v. Zaxcom, Inc.
Page 8 of 8