Seagate

# Barracuda 9LP Family:

# ST39173N/W/WD/LW/WC/LC

# ST34573N/W/WD/LW/WC/LC

*Product Manual, Volume 1*

**Zaxcom, Inc. Exhibit 2051**
**RØDE Microphones, LLC, et. al v. Zaxcom, Inc.**

# *Barracuda 9LP Family:*

# *ST39173N/W/WD/LW/WC/LC*

# *ST34573N/W/WD/LW/WC/LC*

*Product Manual, Volume 1*

Zaxcom, Inc. Exhibit 2051
RØDE Microphones, LLC, et. al v. Zaxcom, Inc.
Page 3 of 100

© 1997, 1998 Seagate Technology, Inc. All rights reserved
Publication number: 77767517, Rev. C
July 1998

Seagate, Seagate Technology, and the Seagate logo are registered trademarks of Seagate Technology, Inc. Barracuda, SeaFAX, SeaFONE, SeaBOARD, and SeaTDD are either trademarks or registered trademarks of Seagate Technology, Inc. or one of its subsidiaries. All other trademarks or registered trademarks are the property of their respective owners.

Seagate reserves the right to change, without notice, product offerings or specifications. No part of this publication may be reproduced in any form without written permission of Seagate Technology, Inc.

# Revision status summary sheet

| Revision | Date | Writer/Engineer | Sheets Affected |
|---|---|---|---|
| Rev. A | 03/04/98 | D. Ashby/S. Welty | 1/1, v thru viii, 1-87 |
| Rev. B | 05/22/98 | D. Ashby/S. Welty | 10, 11, 31, 32, 46, 49, 50, 68, 73, 77, 78, and 79. |
| Rev. C | 07/24/98 | D. Ashby/S. Welty | 4, 7, 10, 11, 19, 21, 44, 46, 52, 77, and 78. |

**Notice.**

**Product Manual 77767517 is Volume 1 of a two volume document with the SCSI Interface information in the Volume 2 SCSI Interface Product Manual, part number 77738479.**

**If the SCSI Interface information is needed the Volume 2 Interface Manual should be ordered, part number 77738479.**

# Table of Contents


**1.0 Scope . . . 1**

**2.0 Applicable standards and reference documentation. . . . 3**

2.1 Standards . . . 3
2.1.1 Electromagnetic compatibility . . . 3
2.1.2 Electromagnetic susceptibility. . . . 3
2.2 Electromagnetic compliance . . . 3
2.3 Reference documents . . . 4

**3.0 General description. . . . 5**

3.1 Standard features. . . . 7
3.2 Media characteristics . . . 7
3.3 Performance. . . . 7
3.4 Reliability . . . 7
3.5 Unformatted and formatted capacities . . . 8
3.6 Programmable drive capacity. . . . 8
3.7 Factory installed accessories . . . 8
3.8 Options (factory installed). . . . 8
3.9 Accessories (user installed) . . . 8

**4.0 Performance characteristics . . . 9**

4.1 Internal drive characteristics (transparent to user) . . . 9
4.2 SCSI performance characteristics (visible to user) . . . 9
4.2.1 Access time . . . 9
4.2.2 Format command execution time (minutes) . . . 9
4.2.3 Generalized performance characteristics . . . 9
4.3 Start/stop time . . . 10
4.4 Prefetch/multi-segmented cache control . . . 11
4.5 Cache operation . . . 11
4.5.1 Caching write data . . . 12
4.5.2 Prefetch operation . . . 12

**5.0 Reliability specifications . . . 13**

5.1 Error rates . . . 13
5.1.1 Environmental interference . . . 13
5.1.2 Read errors. . . . 13
5.1.3 Write errors . . . 13
5.1.4 Seek errors . . . 14
5.2 Reliability and service. . . . 14
5.2.1 Mean time between failure . . . 14
5.2.2 Preventive maintenance . . . 14
5.2.3 Service life . . . 14
5.2.4 Service philosophy . . . 14
5.2.5 Service tools . . . 14
5.2.6 Hot plugging Barracuda 9LP disc drives. . . . 15
5.2.7 S.M.A.R.T. . . . 15
5.2.8 Product warranty. . . . 16

**6.0 Physical/electrical specifications . . . 19**

6.1 AC power requirements . . . 19
6.2 DC power requirements . . . 19
6.2.1 Conducted noise immunity . . . 20
6.2.2 Power sequencing . . . 20
6.2.3 Current profile . . . 20
6.3 Power dissipation . . . 21
6.4 Environmental limits . . . 21
6.4.1 Temperature . . . 21


Zaxcom, Inc. Exhibit 2051
RØDE Microphones, LLC, et. al v. Zaxcom, Inc.
Page 7 of 100

6.4.2 Relative humidity . . . . . 24
6.4.3 Effective altitude (sea level) . . . . . 24
6.4.4 Shock and vibration . . . . . 24
6.4.5 Air cleanliness . . . . . 26
6.4.6 Acoustics . . . . . 26
6.4.7 Electromagnetic susceptibility . . . . . 26
6.5 Mechanical specifications . . . . . 27

**7.0 Defect and error management . . . . . 31**
7.1 Drive internal defects . . . . . 31
7.2 Drive error recovery procedures . . . . . 31
7.3 SCSI systems errors . . . . . 32

**8.0 Installation . . . . . 33**
8.1 Drive ID/option select header . . . . . 33
8.1.1 Notes for Figures 7a, 7b, 7c, 7d, 7e, and 7f . . . . . 39
8.1.2 Function description . . . . . 40
8.2 Drive orientation . . . . . 41
8.3 Cooling . . . . . 41
8.3.1 Air flow . . . . . 41
8.4 Drive mounting . . . . . 42
8.5 Grounding . . . . . 42

**9.0 Interface requirements . . . . . 43**
9.1 General description . . . . . 43
9.2 SCSI interface messages supported . . . . . 43
9.3 SCSI interface commands supported . . . . . 44
9.3.1 Inquiry Vital Product data . . . . . 47
9.3.2 Mode Sense data . . . . . 48
9.4 SCSI bus conditions and miscellaneous features supported . . . . . 51
9.5 Synchronous data transfer . . . . . 52
9.5.1 Synchronous data transfer periods supported . . . . . 52
9.5.2 REQ/ACK offset . . . . . 52
9.6 Physical interface . . . . . 52
9.6.1 DC cable and connector . . . . . 52
9.6.2 SCSI interface physical description . . . . . 55
9.6.3 SCSI interface cable requirements . . . . . 56
9.6.4 Mating connectors . . . . . 56
9.7 Electrical description . . . . . 68
9.7.1 Single-ended drivers/receivers . . . . . 68
9.7.2 Differential drivers/receivers . . . . . 69
9.8 Terminator requirements . . . . . 72
9.9 Terminator power . . . . . 73
9.10 Disc drive SCSI timing . . . . . 74

**10.0 Seagate Technology support services . . . . . 77**

# List of Figures


Figure 1. Barracuda 9LP family drive . . . . . 1
Figure 2. Barracuda 9LP family drive . . . . . 6
Figure 3a. Typical Barracuda 9LP family drive +12 V current profile . . . . . 20
Figure 3b. Typical Barracuda 9LP family drive +5 V current profile . . . . . 21
Figure 4. Locations of PCB components listed in Table 3. . . . . 23
Figure 5. Recommended mounting . . . . . 25
Figure 6a. Mounting configuration dimensions for models “N” . . . . . 27
Figure 6b. Mounting configuration dimensions for models “W,” “WD,” and “LW” . . . . . 28
Figure 6c. Mounting configuration dimensions for models “WC” and “LC” . . . . . 29
Figure 7a. Barracuda 9LP family drive ID select header for models “N” . . . . . 34
Figure 7b. Barracuda 9LP family drive ID select for models “W,” “WC,” “WD,” “LW,” and “LC” . . . . . 35
Figure 7c. Barracuda 9LP family drive ID select header J5 for models “W,” “LW,” and “WD” (J5 Pins 1A - 12A) . . . . . 36
Figure 7d. Barracuda 9LP family drive option select header for models “N,” “W,” and “WD” . . . . . 37
Figure 7e. Barracuda 9LP family drive option select header for “WC” model . . . . . 37
Figure 7f. Barracuda 9LP family drive option select header for models “LC” and “LW” . . . . . 38
Figure 8. Air flow (suggested) . . . . . 41
Figure 9a. Physical interface for “N” model drives. . . . . 53
Figure 9b. Model “W,” “WD,” and “LW” drive physical interface (68 pin J1 SCSI I/O connector) . . . . . 54
Figure 9c. Model “WC” and “LC” drive physical interface (80 pin J1 SCSI I/O connector and DC power connector) . . . . . 54
Figure 10. SCSI daisy chain interface cabling for “N,” “W,” “WD,” and “LW” model drives . . . . . 58
Figure 11a. Nonshielded 50 pin SCSI device connector used on “N” models. . . . . 59
Figure 11b. Nonshielded 68 pin SCSI device connector used on “W,” “WD,” and “LW” models. . . . . 59
Figure 11c. Nonshielded 80 pin SCSI “SCA-2” connector, used on “WC” and “LC” models. . . . . 60
Figure 12. Single-ended transmitters and receivers . . . . . 68
Figure 13. HVD output signals. . . . . 69
Figure 14. Typical high-voltage differential I/O line transmitter/receiver and external terminators . . . . . 70
Figure 15. LVD output signals . . . . . 71
Figure 16. Typical SE-LVD alternative transmitter receiver circuits . . . . . 72


Zaxcom, Inc. Exhibit 2051
RØDE Microphones, LLC, et. al v. Zaxcom, Inc.
Page 9 of 100

## 1.0 Scope

This manual describes the Seagate Technology®, Inc. Barracuda 9LP™ disc drives.

Barracuda 9LP drives support the small computer system interface (SCSI) as described in the ANSI SCSI, SCSI-2, and SCSI-3 (Fast-20 and Fast-40) interface specifications to the extent described in this manual. The *SCSI Interface Product Manual* (part number 77738479) describes general SCSI interface characteristics of this and other families of Seagate drives.

From this point on in this product manual the reference to Barracuda 9LP models is referred to as “the drive” (unless references to individual models are necessary).

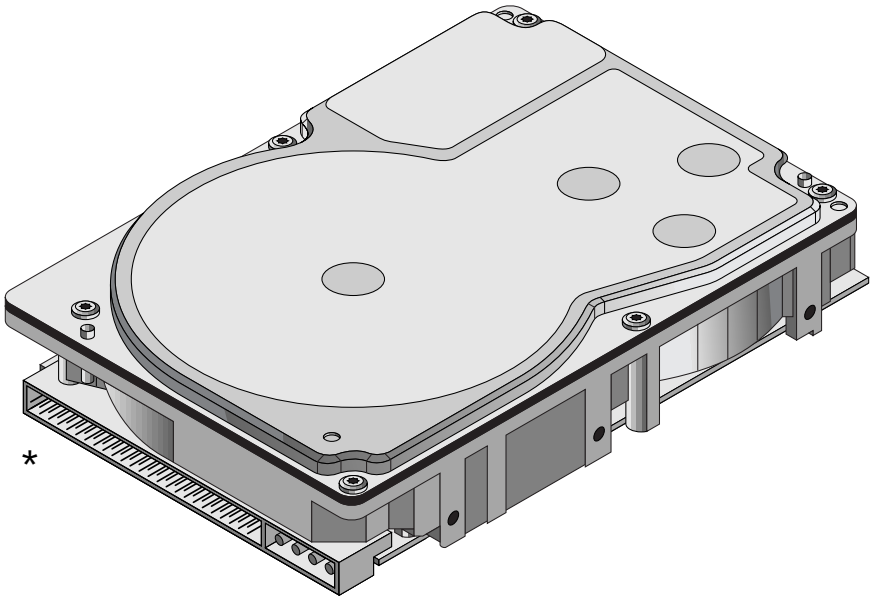


*Model “N” version with 50 pin SCSI I/O connector

**Figure 1. Barracuda 9LP family drive**

# 2.0 Applicable standards and reference documentation

The drive has been developed as a system peripheral to the highest standards of design and construction. The drive depends upon its host equipment to provide adequate power and environment in order to achieve optimum performance and compliance with applicable industry and governmental regulations. Special attention must be given in the areas of safety, power distribution, shielding, audible noise control, and temperature regulation. In particular, the drive must be securely mounted in order to guarantee the specified performance characteristics. Mounting by bottom holes must meet the requirements of Section 8.4.

## 2.1 Standards

The Barracuda 9LP family complies with Seagate standards as noted in the appropriate sections of this Manual and the Seagate *SCSI Interface Product Manual*, part number 77738479 (Vol. 2).

The Barracuda 9LP disc drive is a UL recognized component per UL1950, CSA certified to CAN/CSA C22.2 No. 950-95, and VDE certified to VDE 0805 and EN60950.

### 2.1.1 Electromagnetic compatibility

The drive, as delivered, is designed for system integration and installation into a suitable enclosure prior to use. As such the drive is supplied as a subassembly and is not subject to Subpart B of Part 15 of the FCC Rules and Regulations nor the Radio Interference Regulations of the Canadian Department of Communications.

The design characteristics of the drive serve to minimize radiation when installed in an enclosure that provides reasonable shielding. As such, the drive is capable of meeting the Class B limits of the FCC Rules and Regulations of the Canadian Department of Communications when properly packaged. However, it is the user's responsibility to assure that the drive meets the appropriate EMI requirements in their system. Shielded I/O cables may be required if the enclosure does not provide adequate shielding. If the I/O cables are external to the enclosure, shielded cables should be used, with the shields grounded to the enclosure and to the host controller.

### 2.1.2 Electromagnetic susceptibility

As a component assembly, the drive is not required to meet any susceptibility performance requirements. It is the responsibility of those integrating the drive within their systems to perform those tests required and design their system to ensure that equipment operating in the same system as the drive or external to the system does not adversely affect the performance of the drive. See Section 5.1.1 and Table 2, DC power requirements.

## 2.2 Electromagnetic compliance

Seagate uses an independent laboratory to confirm compliance to the directives/standard(s) for CE Marking and C-Tick Marking. The drive was tested in a representative system for typical applications. The selected system represents the most popular characteristics for test platforms. The system configurations include:

- 486, Pentium, and PowerPC microprocessors
- 3.5-inch floppy disc drive
- Keyboard
- Monitor/display
- Printer
- External modem
- Mouse

Although the test system with this Seagate model complies to the directives/standard(s), we cannot guarantee that all systems will comply. The computer manufacturer or system integrator shall confirm EMC compliance and provide CE Marking and C-Tick Marking for their product.

**Electromagnetic compliance for the European Union**

If this model has the CE Marking it complies with the European Union requirements of the Electromagnetic Compatibility Directive 89/336/EEC of 03 May 1989 as amended by Directive 92/31/EEC of 28 April 1992 and Directive 93/68/EEC of 22 July 1993.

### Australian C-Tick

If this model has the C-Tick Marking it complies with the Australia/New Zealand Standard AS/NZS3548 1995 and meets the Electromagnetic Compatibility (EMC) Framework requirements of Australia's Spectrum Management Agency (SMA).

## 2.3 Reference documents

| | |
|---|---|
| *Barracuda 9LP Installation Guide* | Seagate P/N 77767518 |
| *SCSI Interface Product Manual* | Seagate P/N 77738479 |

ANSI small computer system interface (SCSI) document numbers:

| | |
|---|---|
| X3.131-1994 | SCSI-2 |
| X3T10/855D | SPI |
| X3T10/1071D | Fast-20 (also called "Ultra SCSI") |
| X3T10/1142D | SPI-2 |
| X3T10/1143D | |

SFF-8046 Specification for 80-pin connector for SCSI disk drives

| | |
|---|---|
| Package Test Specification | Seagate P/N 30190-001 (under 100 lb.) |
| Package Test Specification | Seagate P/N 30191-001 (over 100 lb.) |
| Specification, Acoustic Test Requirements, and Procedures | Seagate P/N 30553-001 |

In case of conflict between this document and any referenced document, this document takes precedence.

## 3.0 General description

Barracuda 9LP drives combine magnetoresistive (MR) heads, partial response/maximum likelihood (PRML) read channel electronics, embedded servo technology, and a SCSI-3 (Fast-20 and Fast-40) interface to provide high performance, high capacity data storage for a variety of systems including engineering workstations, network servers, mainframes, and supercomputers.

Fast-20 and Fast-40 (also known as Ultra-1 SCSI and Ultra-2 SCSI, respectively) are negotiated transfer rates. These transfer rates will occur only if your host adapter also supports these data transfer rates. This drive also operates at SCSI-1 and SCSI-2 data transfer rates for backward compatibility with non-Fast-20/Fast-40 capable SCSI host adapters.

Table 1 lists the features that differentiate the various Barracuda 9LP models.

**Table 1: Drive model number vs. differentiating features**

| Model number | Number of heads | I/O circuit type [1] | Number of I/O connector pins | Number of I/O data bus bits |
|---|---|---|---|---|
| ST39173N | 10 | single-ended | 50 | 8 |
| ST39173W | 10 | single-ended | 68 | 16 |
| ST39173WD | 10 | differential (HVD) | 68 | 16 |
| ST39173LW | 10 | differential (LVD) | 68 | 16 |
| ST39173WC | 10 | single-ended | 80 | 16 |
| ST39173LC | 10 | differential (LVD) | 80 | 16 |
| ST34573N | 5 | single-ended | 50 | 8 |
| ST34573W | 5 | single-ended | 68 | 16 |
| ST34573WD | 5 | differential (HVD) | 68 | 16 |
| ST34573LW | 5 | differential (LVD) | 68 | 16 |
| ST34573WC | 5 | single-ended | 80 | 16 |
| ST34573LC | 5 | differential (LVD) | 80 | 16 |

[1] See Section 9.6 for details and definitions.

The drive records and recovers data on 3.5-inch (86 mm) non-removeable discs.

The drive supports the Small Computer System Interface (SCSI) as described in the ANSI SCSI-2/SCSI-3 SPI-2 interface specifications to the extent described in this manual (volume 1), which defines the product performance characteristics of the Barracuda 9LP family of drives, and the *SCSI Interface Product Manual* (volume 2), part number 77738479, which describes the general interface characteristics of this and other families of Seagate SCSI drives.

The drive's interface supports multiple initiators, disconnect/reconnect, self-configuring host software, and automatic features that relieve the host from the necessity of knowing the physical characteristics of the targets (logical block addressing is used).

The head and disc assembly (HDA) is sealed at the factory. Air circulates within the HDA through a non-replaceable filter to maintain a contamination-free HDA environment.

Refer to Figure 2 for an exploded view of the drive. This exploded view is for information only—never disassemble the HDA and do not attempt to service items in the sealed enclosure (heads, media, actuator, etc.) as this requires special facilities. The drive contains no replaceable parts. Opening the HDA voids your warranty.

Barracuda 9LP drives use a dedicated landing zone at the innermost radius of the media to eliminate the possibility of destroying or degrading data by landing in the data zone. The drive automatically goes to the landing zone when power is removed.

An automatic shipping lock prevents potential damage to the heads and discs that results from movement during shipping and handling. The shipping lock automatically disengages when power is applied to the drive and the head load process begins.

Barracuda 9LP drives decode track 0 location data from the servo data embedded on each surface to eliminate mechanical transducer adjustments and related reliability concerns.

A high-performance actuator assembly with a low-inertia, balanced, patented, straight-arm design provides excellent performance with minimal power dissipation.

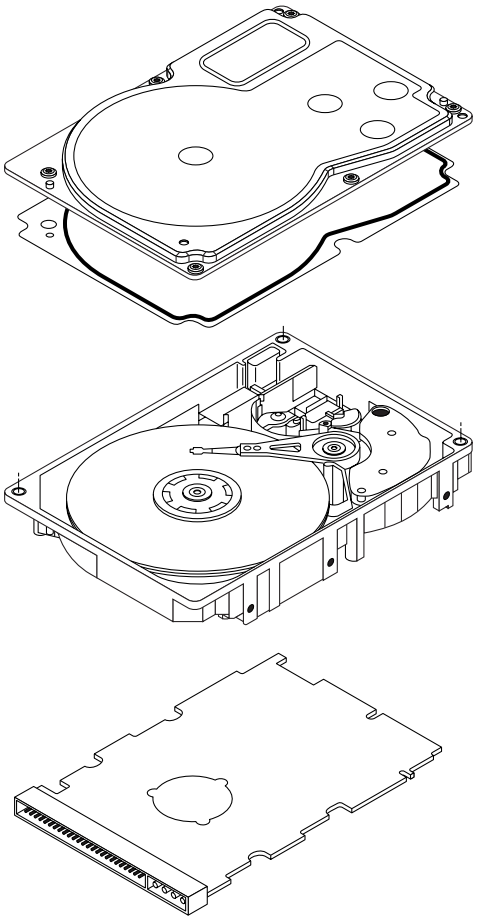

**Figure 2. Barracuda 9LP family drive**

### 3.1 Standard features

The Barracuda 9LP family has the following standard features:

- Integrated SCSI controller
- Single-ended or high voltage differential SCSI drivers and receivers, or low voltage differential drivers and receivers (“LC” and “LW” models only)
- 8 bit or 16 bit I/O data bus models available
- Asynchronous and synchronous data transfer protocol
- Firmware downloadable via SCSI interface
- Selectable even byte sector sizes from 512 to 4,096 bytes/sector
- Programmable drive capacity
- Programmable sector reallocation scheme
- Flawed sector reallocation at format time
- Programmable auto write and read reallocation
- Reallocation of defects on command (post format)
- Enhanced ECC correction capability up to 185 bits
- Sealed head and disc assembly
- No preventative maintenance or adjustment required
- Dedicated laser textured head landing zone
- Embedded servo data rather than a separate servo data surface
- Self diagnostics performed when power is applied to the drive
- 1:1 Interleave
- Zoned bit recording (ZBR)
- Vertical, horizontal, or top down mounting
- Dynamic spindle brake
- Active IC terminators enabled by jumpers (“N” and “W” models only)
- 512 Kbyte data buffer or 2 Mbyte optional; “LW” and “LC” model drives have 1 Mbyte, or optional 4 Mbyte data buffer
- Hot plug compatibility (section 9.6.4.3 lists proper host connector needed) for “WC” and “LC” model drives
- SCAM (SCSI Configured AutoMagically) plug-n-play level 2 compliant, factory set to level 1 (not user selectable)
- Low audible noise for office environment
- Low power consumption

### 3.2 Media characteristics

The media used on the drive has a diameter of approximately 3.5 inches (86 mm). The aluminum substrate is coated with a thin film magnetic material, overcoated with a proprietary protective layer for improved durability and environmental protection.

### 3.3 Performance

- Supports industry standard Fast-20 and Fast-40 (“LC” and “LW” drives only) SCSI interfaces (also called “Ultra-1 SCSI” and “Ultra-2 SCSI,” respectively)
- Programmable multi-segmentable cache buffer (see Section 4.4)
- 7200 RPM spindle. Average latency = 4.17 ms
- Command queuing of up to 64 commands
- Background processing of queue
- Supports start and stop commands (spindle stops spinning)

### 3.4 Reliability

- 1,000,000 hour MTBF
- LSI circuitry
- Balanced low mass rotary voice coil actuator
- Incorporates industry-standard Self-Monitoring, Analysis and Reporting Technology (S.M.A.R.T.)

- Incorporates Seek To Improve Reliability algorithm (STIR)
- 5-year warranty

### 3.5 Unformatted and formatted capacities

Formatted capacity depends on the number of spare reallocation sectors reserved and the number of bytes per sector. The following table shows the standard OEM model read capacities data. Total LBAs = read capacity data shown below +1.

| | **Formatted data block size 512 bytes/sector [1]** |
|---|---|
| ST39173 | 10F59C7h (9,105 GB) [2] |
| ST34573 | 87A25Bh (4,551 GB) [2] |

**Notes.**

[1] Sector size selectable at format time. Users having the necessary equipment may modify the data block size before issuing a format command and obtain different formatted capacities than those listed. See Mode Select Command and Format Command in the *SCSI Interface Product Manual*, part number 77738479.

[2] User available capacity depends on spare reallocation scheme selected. The number of data tracks per sparing zone and the number of alternate sectors (LBAs) per sparing zone can be determined by using the Mode Sense command and reading Mode Page 03h. Total LBAs(h) x 200(h) = total byte capacity.

### 3.6 Programmable drive capacity

Using the Mode Select command, the drive can change its capacity to something less than maximum. See Table 5.2.1-13 in the *SCSI Interface Product Manual*, part number 77738479. Refer to the Parameter list block descriptor number of blocks field. A value of zero in the number of blocks field indicates that the drive shall not change the capacity it is currently formatted to have. A number in the number of blocks field that is less than the maximum number of LBAs changes the total drive capacity to the value in the block descriptor number of blocks field. A value greater than the maximum number of LBAs is rounded down to the maximum capacity.

### 3.7 Factory installed accessories

OEM Standard drives are shipped with the *Barracuda 9LP Installation Guide*, part number 77767518 (unless otherwise specified). The factory also ships with the drive a small bag of jumper plugs used for the J2, J5, and J6 option select jumper headers.

### 3.8 Options (factory installed)

All customer requested options are incorporated during production or packaged at the manufacturing facility before shipping. Some of the options available are (not an exhaustive list of possible options):

- Other capacities can be ordered depending on sparing scheme and sector size requested.
- 2 Mbyte optional buffer size for “N,” “W,” “WD,” and “WC” models.
- 4 Mbyte optional buffer size for “LC” and “LW” models.
- Single unit shipping pack. The drive is normally shipped in bulk packaging to provide maximum protection against transit damage. Units shipped individually require additional protection as provided by the single unit shipping pack. Users planning single unit distribution should specify this option.
- The *Barracuda 9LP Installation Guide*, part number 77767518, is included with each standard OEM drive shipped, but extra copies may be ordered.

### 3.9 Accessories (user installed)

The following accessories are available. All accessories may be installed in the field.

- Single unit shipping pack.

# 4.0 Performance characteristics

## 4.1 Internal drive characteristics (transparent to user)

| | ST39173 | ST34573 | |
|---|---|---|---|
| Drive capacity | 9,100 | 4,550 | GByte (formatted, rounded off values) |
| Read/write heads | 10 | 5 | |
| Bytes/track | 155,000 | 155,000 | Bytes (average, unformatted, rounded off values) |
| Bytes/surface | 1,165 | 1,165 | Mbytes (unformatted, rounded off values) |
| Tracks/surface (total) | 7,501 | 7,501 | Tracks (user accessible) |
| Tracks/inch | 8,250 | 8,250 | TPI |
| Peak bits/inch | 180 | 180 | KBPI |
| Internal data rate | 120-190 | 120-190 | Mbits/sec (variable with zone) |
| Disc rotational speed | 7,200 | 7,200 | r/min |
| Average rotational latency | 4.17 | 4.17 | msec |
| Recording code | 16/17 | 16/17 | EPR4 |

## 4.2 SCSI performance characteristics (visible to user)*

The values given in Section 4.2.1 apply to all models of the Barracuda 9LP family unless otherwise specified. Refer to Section 9.10 and to the *SCSI Interface Product Manual*, part number 77738479, for additional timing details.

### 4.2.1 Access time [8]

| | | Including controller overhead (without disconnect) [1] [4] | |
|---|---|---|---|
| | | Drive level | |
| | | Read | Write |
| | | msec | |
| Average | – Typical [3] | 7.4 | 8.2 |
| Single Track | – Typical [3] | 1.1 | 1.4 |
| Full Stroke | – Typical [3] | 16 | 18 |

### 4.2.2 Format command execution time (minutes) [1]*

| | ST39173 | ST34573 |
|---|---|---|
| Maximum (with verify) | 40 | 25 |
| Maximum (no verify) | 20 | 13 |

### 4.2.3 Generalized performance characteristics

Minimum sector interleave 1 to 1

Data buffer transfer rate to/from disc media (one 512-byte sector):

| | | | |
|---|---|---|---|
| Min. | [4]* | 15.2 | MByte/sec |
| Avg. | [4] | 20.4 | MByte/sec |
| Max. | [4] | 23.7 | MByte/sec |

Data buffer transfer rate to/from disc media: (< 1 track):

| | | | | |
|---|---|---|---|---|
| Min. | [4] | 10.8 | MByte/sec | divided by (interleave factor) |
| Avg. | [4] | 16.0 | MByte/sec | divided by (interleave factor) |
| Max. | [4] | 17.0 | MByte/sec | divided by (interleave factor) |

*[ ] All notes for Section 4.2 are listed at end of Section 4.2.3.

Zaxcom, Inc. Exhibit 2051
RØDE Microphones, LLC, et. al v. Zaxcom, Inc.
Page 19 of 100

| | |
|---|---|
| SCSI interface data transfer rate (asynchronous) [5]: | |
| Maximum instantaneous | 6.0 Mbytes/sec [6] |
| Maximum average | 6.0 Mbytes/sec [7] |
| Synchronous transfer rate for SCSI Fast-20 (Ultra-1 SCSI): | |
| 8 bit data bus models | 20 Mbytes/sec |
| 16 bit data bus models | 40 Mbytes/sec |
| Synchronous transfer rate for SCSI Fast-40 (Ultra-2 SCSI): | |
| 8 bit data bus models | 40 Mbytes/sec |
| 16 bit data bus models | 80 Mbytes/sec |
| Synchronous transfer rate for fast SCSI-2: | |
| 8 bit data bus models | 1.25 to 10 Mbytes/sec |
| Synchronous transfer rate for fast SCSI-2: | |
| 16 bit data bus models | 2.5 to 20 Mbytes/sec |
| Sector Sizes: | |
| Default | 512 byte user data blocks |
| Variable | 180 to 4,096 bytes per sector in even number of bytes per sector.<br>If n (number of bytes per sector) is odd, then n-1 will be used. |

| | |
|---|---|
| Read/write consecutive sectors on a track | Yes |
| Flaw reallocation performance impact (for flaws reallocated at format time using the spare sectors per sparing region reallocation scheme.) | Negligible |
| Overhead time for head switch (512 byte sectors) in sequential mode | 1.2 msec |
| Overhead time for one track cylinder switch in sequential mode | 1.2 msec (typical) |
| Average rotational latency | 4.17 msec |

**Notes for Section 4.2.**

[1] Execution time measured from receipt of the last Byte of the Command Descriptor Block (CDB) to the request for a Status Byte Transfer to the Initiator (excluding connect/disconnect).
[2] Maximum times are specified over the worst case conditions of temperature, voltage margins and drive orientation. When comparing specified access times, care should be taken to distinguish between typical access times and maximum access times. The best comparison is obtained by system benchmark tests conducted under identical conditions. Maximum times do not include error recovery.
[3] Typical Access times are measured under nominal conditions of temperature, voltage, and horizontal orientation as measured on a representative sample of drives.
[4] Assumes no errors and no sector has been relocated.
[5] Rate measured from the start of the first sector transfer to or from the Host.
[6] Assumes system ability to support the rates listed and no cable loss.
[7] Simulated.
[8] Access time = controller overhead + average seek time
Access to data = controller overhead + average seek time + latency time

## 4.3 Start/stop time

After DC power at nominal voltage has been applied, the drive typically becomes ready within 30 seconds if the Motor Start Option is disabled, such as the motor starts as soon as the power has been applied. If a recoverable error condition is detected during the start sequence, the drive executes a recovery procedure which may cause the time to become ready to exceed 30 seconds, but to become ready within 50 seconds. During spin up to ready time, the drive responds to some commands over the SCSI interface in less than 1.5 seconds after application of power. The supported commands include the Test Unit Ready command which can be used to

provide information indicating the status of the spin up, such as the drive is still in process of coming ready or the drive requires intervention (see *SCSI Interface Product Manual*, part number 77738479). Stop time is less than 20 seconds from removal of DC power.

If the Motor Start Option is enabled, the internal controller accepts the commands listed in the *SCSI Interface Product Manual* less than 3 seconds after DC power has been applied. After the Motor Start Command has been received the drive becomes ready for normal operations within 13 seconds typically (excluding an error recovery procedure). The Motor Start Command can also be used to command the drive to stop the spindle (see *SCSI Interface Product Manual*, part number 77738479).

There is no power control switch on the drive.

### 4.4 Prefetch/multi-segmented cache control

The drive provides prefetch (read look-ahead) and multi-segmented cache control algorithms that in many cases can enhance system performance. “Cache” as used herein refers to the drive buffer storage space when it is used in “cache” operations. To select prefetch and cache features the host sends the Mode Select command with the proper values in the applicable bytes in Mode Page 08h (see *SCSI Interface Product Manual,* part number 77738479). Prefetch and cache operation are independent features from the standpoint that each is enabled and disabled independently via the Mode Select command. However, in actual operation the prefetch feature overlaps cache operation somewhat as is noted in Section 4.5.1 and 4.5.2.

All default cache and prefetch Mode parameter values (Mode Page 08h) for standard OEM versions of this drive family are given in Tables 9a and 9b.

### 4.5 Cache operation

In general, all but 100 Kbytes of the physical buffer space in the drive can be used as storage space for cache operations. The buffer can be divided into logical segments (Mode Select Page 08h, byte 13) from which data is read and to which data is written. The drive maintains a table of logical block disk medium addresses of the data stored in each segment of the buffer. If cache operation is enabled (RCD bit = 0 in Mode Page 08h, byte 2, bit 0, see *SCSI Interface Product Manual,* part number 77738479), data requested by the host with a Read command is retrieved from the buffer (if it is there), before any disc access is initiated. If cache operation is not enabled, the buffer (still segmented with required number of segments) is still used, but only as circular buffer segments during disc medium read operations (disregarding Prefetch operation for the moment). That is, the drive does not check in the buffer segments for the requested read data, but goes directly to the medium to retrieve it. The retrieved data merely passes through some buffer segment on the way to the host. On a cache “miss”, all data transfers to the host are in accordance with “buffer-full” ratio rules. On a cache “hit” the drive ignores the “buffer-full” ratio rules. See explanations associated with Mode page 02h (disconnect/reconnect control) in the *SCSI Interface Product Manual*.

The following is a simplified description of a read operation with cache operation enabled:

**Case A -** A Read command is received and the first logical block (LB) is already in cache:

1. Drive transfers to the initiator the first LB requested plus all subsequent contiguous LB’s that are already in the cache. This data may be in multiple segments.
2. When a requested LB is reached that is not in any cache segment, the drive fetches it and any remaining requested LBs from the disc and puts them in a segment of the cache. The drive transfers the remaining requested LBs from the cache to the host in accordance with the disconnect/reconnect specification mentioned above.
3. If the prefetch feature is enabled, refer to Section 4.5.2 for operation from this point.

**Case B -** A Read command requests data, the first LB of which is not in any segment of the cache:

1. The drive fetches the requested LB’s from the disc and transfers them into a segment, and from there to the host in accordance with the disconnect/reconnect specification referred to in case A.
2. If the prefetch feature is enabled, refer to Section 4.5.2 for operation from this point.

Each buffer segment is actually a self-contained circular storage (wrap-around occurs), the length of which is an integer number of disc medium sectors. The wrap-around capability of the individual segments greatly enhances the buffer’s overall performance as a cache storage, allowing a wide range of user selectable configurations, which includes their use in the prefetch operation (if enabled), even when cache operation is disabled

(see Section 4.5.2). The number of segments may be selected using the Mode Select command, but the size can not be directly selected. Size is selected only as a by-product of selecting the segment number specification. The size in Kbytes of each segment is not reported by the Mode Sense command page 08h, bytes 14 and 15. The value 0XFFFF is always reported. If a size specification is sent by the host in a Mode Select command (bytes 14 and 15) no new segment size is set up by the drive, and if the “STRICT” bit in Mode page 00h (byte 2, bit 1) is set to one, the drive responds as it does for any attempt to change unchangeable parameters (see *SCSI Interface Product Manual,* part number 77738479). The drive supports operation of any integer number of segments from 1 to 16.

### 4.5.1 Caching write data

Write caching is a write operation by the drive that makes use of a drive buffer storage area where the data to be written to the medium is stored in one or more segments while the drive performs the write command.

If read caching is enabled (RCD=0), then data written to the medium is retained in the cache to be made available for future read cache hits. The same buffer space and segmentation is used as set up for read functions. The buffer segmentation scheme is set up or changed independently, having nothing to do with the state of RCD. When a write command is issued, if RCD=0, the cache is first checked to see if any logical blocks that are to be written are already stored in the cache from a previous read or write command. If there are, the respective cache segments are cleared. The new data is cached for subsequent Read commands.

If the number of write data logical blocks exceeds the size of the segment being written into, when the end of the segment is reached, the data is written into the beginning of the same cache segment, overwriting the data that was written there at the beginning of the operation. However, the drive does not overwrite data that has not yet been written to the medium.

If write caching is enabled (WCE=1), then the drive may return GOOD status on a write command after the data has been transferred into the cache, but before the data has been written to the medium. If an error occurs while writing the data to the medium, and GOOD status has already been returned, a deferred error will be generated.

The Synchronize Cache command may be used to force the drive to write all cached write data to the medium. Upon completion of a Synchronize Cache command, all data received from previous write commands will have been written to the medium. The Start/Stop command with the stop bit set will force a sync cache operation before the drive stops.

Tables 9a and 9b show Mode default settings for the drives.

### 4.5.2 Prefetch operation

If the Prefetch feature is enabled, data in contiguous logical blocks on the disc immediately beyond that which was requested by a Read command can be retrieved and stored in the buffer for immediate transfer from the buffer to the host on subsequent Read commands that request those logical blocks (this is true even if “cache” operation is disabled). Though the prefetch operation uses the buffer as a “cache”, finding the requested data in the buffer is a prefetch “hit”, not a “cache” operation “hit”. Prefetch is enabled using Mode Select page 08h, byte 12, bit 5 (Disable Read Ahead - DRA bit). DRA bit = 0 enables prefetch. Since data that is prefetched replaces data already in some buffer segment(s), the host can limit the amount of prefetch data to optimize system performance. The max prefetch field (bytes 8 and 9) limits the amount of prefetch. The drive does not use the prefetch “ceiling” field (bytes 10 and 11).

During a prefetch operation, the drive crosses a cylinder boundary to fetch more data only if the Discontinuity (DISC) bit is set to one in bit 4 of byte 2 of Mode parameters page 08h.

Whenever prefetch (read look-ahead) is enabled (enabled by DRA = 0), it operates under the control of ARLA (Adaptive Read Look-Ahead). If the host uses software interleave, ARLA enables prefetch of contiguous blocks from the disc when it senses that a prefetch “hit” will likely occur, even if two consecutive read operations were not for physically contiguous blocks of data (e.g. “software interleave”). ARLA disables prefetch when it decides that a prefetch “hit” will not likely occur. If the host is not using software interleave, and if two sequential read operations are not for contiguous blocks of data, ARLA disables prefetch, but as long as sequential read operations request contiguous blocks of data, ARLA keeps prefetch enabled.

## 5.0 Reliability specifications

The following reliability specifications assume correct host/drive operational interface, including all interface timings, power supply voltages, environmental requirements and drive mounting constraints (see Section 8.4).

| | |
|---|---|
| Seek Errors | Less than 10 in $10^8$ seeks |
| Read Error Rates [1] | |
| Recovered Data | Less than 10 errors in $10^{12}$ bits transferred (OEM default settings) |
| Unrecovered Data | Less than 1 sector in $10^{15}$ bits transferred (OEM default settings) |
| Miscorrected Data | Less than 1 sector in $10^{21}$ bits transferred |
| MTBF | 1,000,000 hours |
| Service Life | 5 years |
| Preventive Maintenance | None required |

**Note.**

[1] Error rate specified with automatic retries and data correction with ECC enabled and all flaws reallocated.

### 5.1 Error rates

The error rates stated in this specification assume the following:

- The drive is operated per this specification using DC power as defined in this manual (see Section 6.2).
- The drive has been formatted with the SCSI FORMAT commands.
- Errors caused by media defects or host system failures are excluded from error rate computations. Refer to Section 3.2, “Media Characteristics.”

#### 5.1.1 Environmental interference

When evaluating systems operation under conditions of Electromagnetic Interference (EMI), the performance of the drive within the system shall be considered acceptable if the drive does not generate an unrecoverable condition.

An unrecoverable error, or unrecoverable condition, is defined as one that:

- Is not detected and corrected by the drive itself;
- Is not capable of being detected from the error or fault status provided through the drive or SCSI interface; or
- Is not capable of being recovered by normal drive or system recovery procedures without operator intervention.

#### 5.1.2 Read errors

Before determination or measurement of read error rates:

- The data that is to be used for measurement of read error rates must be verified as being written correctly on the media.
- All media defect induced errors must be excluded from error rate calculations.

#### 5.1.3 Write errors

Write errors can occur as a result of media defects, environmental interference, or equipment malfunction. Therefore, write errors are not predictable as a function of the number of bits passed.

If an unrecoverable write error occurs because of an equipment malfunction in the drive, the error is classified as a failure affecting MTBF. Unrecoverable write errors are those which cannot be corrected within two attempts at writing the record with a read verify after each attempt (excluding media defects).

### 5.1.4 Seek errors

A seek error is defined as a failure of the drive to position the heads to the addressed track. There shall be no more than ten recoverable seek errors in $10^8$ physical seek operations. After detecting an initial seek error, the drive automatically performs an error recovery process. If the error recovery process fails, a seek positioning error (15h) is reported with a Medium error (3h) or Hardware error (4h) reported in the Sense Key. This is an unrecoverable seek error. Unrecoverable seek errors are classified as failures for MTBF calculations. Refer to Section 5.1.1.2 of the *SCSI Interface Product Manual,* part number 77738479, for Request Sense information.

## 5.2 Reliability and service

You can enhance the reliability of Barracuda 9LP disc drives by ensuring that the drive receives adequate cooling. Section 6.0 provides temperature measurements and other information that may be used to enhance the service life of the drive. Section 8.3.1 provides recommended air-flow information.

### 5.2.1 Mean time between failure

The production disc drive shall achieve an MTBF of 1,000,000 hours when operated in an environment that ensures the case temperatures specified in Section 6.4.1, Table 3, Column 2 are not exceeded. Short-term excursions up to the specification limits of the operating environment will not affect MTBF performance. Continual or sustained operation at case temperatures above the values shown in Table 3, Column 2 may degrade product reliability.

The following expression defines MTBF

$$\text{MTBF per measurement period} = \frac{\text{Estimated power-on operating hours in the period}}{\text{Number of drive failures in the period}}$$

Estimated power-on operation hours means power-up hours per disc drive times the total number of disc drives in service. Each disc drive shall have accumulated at least nine months of operation. Data shall be calculated on a rolling average base for a minimum period of six months.

Drive failure means any stoppage or substandard performance caused by drive malfunction.

### 5.2.2 Preventive maintenance

No routine scheduled preventive maintenance shall be required.

### 5.2.3 Service life

The drive shall have a useful service life of five years. Depot repair or replacement of major parts is permitted during the lifetime (see Section 5.2.4).

### 5.2.4 Service philosophy

Special equipment is required to repair the drive HDA. In order to achieve the above service life, repairs must be performed only at a properly equipped and staffed service and repair facility. Troubleshooting and repair of PCBs in the field is not recommended, because of the extensive diagnostic equipment required for effective servicing. Also, there are no spare parts available for this drive. Drive warranty is voided if the HDA is opened.

### 5.2.5 Service tools

No special tools are required for site installation or recommended for site maintenance. Refer to Section 5.2.4. The depot repair philosophy of the drive precludes the necessity for special tools. Field repair of the drive is not practical since there are no user purchasable parts in the drive.

### 5.2.6 Hot plugging Barracuda 9LP disc drives

The ANSI SPI-2 (T10/1142D) document defines the physical requirements for removal and insertion of SCSI devices on the SCSI bus. Four cases are addressed. The cases are differentiated by the state of the SCSI bus when the removal or insertion occurs.

Case 1 All bus devices powered off during removal or insertion

Case 2 RST signal asserted continuously during removal or insertion

Case 3 Current I/O processes not allowed during insertion or removal

Case 4 Current I/O process allowed during insertion or removal, except on the device being changed

Seagate Barracuda disc drives support four hot plugging cases. Provision shall be made by the system such that a device being inserted makes power and ground connections prior to the connection of any device signal contact to the bus. A device being removed shall maintain power and ground connections after the disconnection of any device signal contact from the bus (see SFF-8046, SCA-2 specification).

It is the responsibility of the systems integrator to assure that no hazards from temperature, energy, voltage, or ESD potential are presented during the hot connect/disconnect operation.

All I/O processes for the SCSI device being inserted or removed shall be quiescent. All SCSI devices on the bus shall have receivers that conform to the SPI-2 standard.

If the device being hot plugged uses single-ended (SE) drivers and the bus is currently operating in low voltage differential (LVD) mode, then all I/O processes for all devices on the bus must be completed, and the bus quiesced, before attempting to hot plug. Following the insertion of the newly installed device, the SCSI host adapter must issue a Bus Reset, followed by a synchronous transfer negotiation. Failure to perform the SCSI Bus Reset could result in erroneous bus operations.

The SCSI bus termination and termination power source shall be external to the device being inserted or removed.

End users should not mix devices with high voltage differential (HVD) drivers and receivers and devices with SE, LVD, or multimode drivers and receivers on the same SCSI bus since the common mode voltages in the HVD environment may not be controlled to safe levels for SE and LVD devices (see ANSI SPI-2).

The disc drive spindle must come to a complete stop prior to completely removing the drive from the cabinet chassis. Use of the Stop Spindle command or partial withdrawal of the drive, enough to be disconnected from the power source, prior to removal are methods for insuring that this requirement is met. During drive insertion, care should be taken to avoid exceeding the limits stated in Section 6.4.4, "Shock and vibration," of this manual.

### 5.2.7 S.M.A.R.T.

S.M.A.R.T. is an acronym for Self-Monitoring Analysis and Reporting Technology. This technology is intended to recognize conditions that indicate a drive failure and is designed to provide sufficient warning of a failure to allow data back-up before an actual failure occurs.

**Note.** The firmware will monitor specific attributes for degradation over time but cannot predict instantaneous drive failures.

Each attribute has been selected to monitor a specific set of failure conditions in the operating performance of the drive, and the thresholds are optimized to minimize “false” and “failed” predictions.

#### Controlling S.M.A.R.T.

The operating mode of S.M.A.R.T. is controlled by the DEXCPT bit and the PERF bit of the “Informational Exceptions Control Mode Page” (1Ch). The DEXCPT bit is used to enable or disable the S.M.A.R.T. process. Setting the DEXCPT bit will disable all S.M.A.R.T. functions. When enabled, S.M.A.R.T. will collect on-line data as the drive performs normal read/write operations. When the PERF bit is set, the drive is considered to be in “On-line Mode Only” and will not perform off-line functions.

The process of measuring off-line attributes and saving data can be forced by the RTZ (return to zero) command. Forcing S.M.A.R.T. will reset the timer so that the next scheduled interrupt will be two hours.

The drive can be interrogated by the host to determine the time remaining before the next scheduled measurement and data logging process will occur. This is accomplished by a log sense command to log page 0x3E. The purpose is to allow the customer to control when S.M.A.R.T. interruptions occur. As described above, forcing S.M.A.R.T by the RTZ command will reset the timer.

### Performance impact

S.M.A.R.T. attribute data will be saved to the disc for the purpose of recreating the events that caused a predictive failure. The drive will measure and save parameters once every two hours subject to an idle period on the SCSI bus. The process of measuring off-line attribute data and saving data to the disc is uninterruptable and the maximum delay is summarized below:

**Maximum processing delay**

| | **On-line only delay DEXCPT = 0, PERF = 1** | **Fully enabled delay DEXCPT = 0, PERF = 0** |
|---|---|---|
| S.M.A.R.T. delay times | 30 milliseconds | 200 milliseconds |

### Reporting control

Reporting is controlled in the “Informational Exceptions Control Page” (1Ch). Subject to the reporting method, the firmware will issue to the “host” an 01-5D00 sense code. The error code is preserved through bus resets and power cycles.

### Determining rate

S.M.A.R.T. monitors the rate at which errors occur and signals a predictive failure if the rate of degraded error rate increases to an unacceptable level. To determine rate, error events are logged and compared to the number of total operations for a given attribute. The interval defines the number of operations over which to measure the rate. The counter that keeps track of the current number of operations is referred to as the Interval Counter.

S.M.A.R.T. measures error rate, hence for each attribute the occurrence of an “error” is recorded. A counter keeps track of the number of errors for the current interval. This counter is referred to as the Failure Counter.

Error rate is simply the number of errors per operation. The algorithm that S.M.A.R.T. uses to record rates of error is to set thresholds for the number of errors and the interval. If the number of errors exceeds the threshold before the interval expires, then the error rate is considered to be unacceptable. If the number of errors does not exceed the threshold before the interval expires, then the error rate is considered to be acceptable. In either case, the interval and failure counters are reset and the process starts over.

### Predictive failures

S.M.A.R.T. signals predictive failures when the drive is performing unacceptably for a period of time. The firmware keeps a running count of the number of times the error rate for each attribute is unacceptable. To accomplish this, a counter is incremented whenever the error rate is unacceptable and decremented (not to exceed zero) whenever the error rate is acceptable. Should the counter continually be incremented such that it reaches the predictive threshold, a predictive failure is signaled. This counter is referred to as the Failure History Counter. There is a separate Failure History Counter for each attribute.

## 5.2.8 Product warranty

Beginning on the date of shipment to customer and continuing for a period of five years, Seagate warrants that each product (including components and subassemblies) or spare part that fails to function properly under normal use due to defect in materials on workmanship or due to nonconformance to the applicable specifications will be repaired or replaced, at Seagate’s option and at no charge to customer, if returned by customer at customer’s expense to Seagate’s designated facility in accordance with Seagate’s Warranty Procedure. Seagate will pay for transporting the repair or replacement item to customer. For more detailed warranty information refer to the Standard terms and conditions of Purchase for Seagate products.

### Shipping

When transporting or shipping a drive, a Seagate approved container must be used. Keep your original box. They are easily identified by the Seagate Approved Package label. Shipping a drive in a non-approved container voids the drive warranty.

Seagate repair centers may refuse receipt of components improperly packaged or obviously damaged in transit. Contact your Authorized Seagate Distributor to purchase additional boxes. Seagate recommends shipping by an air-ride carrier experienced in handling computer equipment.

### Product repair and return information

Seagate customer service centers are the only facilities authorized to service Seagate drives. Seagate does not sanction any third-party repair facilities. Any unauthorized repair or tampering with the factory-seal voids the warranty.

# 6.0 Physical/electrical specifications

This section provides information relating to the physical and electrical characteristics of the Barracuda 9LP drive.

## 6.1 AC power requirements

None.

## 6.2 DC power requirements

The voltage and current requirements for a single drive are shown in the following table. Values indicated apply at the drive power connector. The single ended power requirements includes the internal disc drive SCSI I/O termination. The table shows current values in Amperes.

**Table 2: DC power requirements**

| | | ST39173 | | | | | | ST34573 | | | | | |
|---|---|---|---|---|---|---|---|---|---|---|---|---|---|
| | Notes | N/W/WC Single-ended | | WD Differential | | LC/LW LVD | | N/W/WC Single-ended | | WD Differential | | LC/LW LVD | |
| Voltage | | +5 V | +12 V | +5 V | +12 V | +5 V | +12 V | +5 V | +12 V | +5 V | +12 V | +5 V | +12 V |
| Regulation | [5][2] | ±5% | ±5% | ±5% | ±5% | ±5% | ±5% | ±5% | ±5% | ±5% | ±5% | ±5% | ±5% |
| Maximum operating current DC | [1] | 1.15 | .95 | 1.23 | .95 | 1.4 | .95 | 1.15 | .95 | 1.23 | .95 | 1.4 | .95 |
| Average idle current DC$\overline{X}$ | [1] | .75 | .5 | .78 | .5 | .75 | .5 | .75 | .5 | .78 | .5 | .75 | .5 |
| Maximum starting current<br>(peak DC)<br>(peak AC) | <br>[3]<br>[3] | <br>1.2 | <br>1.7<br>2.9 | <br>1.23 | <br>1.7<br>2.9 | <br>1.2 | <br>1.7<br>2.9 | <br>1.2 | <br>1.7<br>2.9 | <br>1.23 | <br>1.7<br>2.9 | <br>1.2 | <br>1.7<br>2.9 |
| Delayed motor start (max) DC | [1][4] | .65 | .06 | .67 | .06 | .65 | .06 | .65 | .06 | .67 | .06 | .65 | .06 |
| Peak operating current<br>Typical DC$\overline{X}$<br>Maximum DC<br>Maximum (Peak) | <br>[1][6]<br>[1] | <br>1.05<br>1.15<br>1.7 | <br>.9<br>.95<br>2.4 | <br>1.16<br>1.23<br>2.00 | <br>.9<br>.95<br>2.4 | <br>1.2<br>1.4<br>1.7 | <br>.9<br>.95<br>2.4 | <br>1.05<br>1.15<br>1.7 | <br>.9<br>.95<br>2.4 | <br>1.16<br>1.23<br>2.00 | <br>.9<br>.95<br>2.4 | <br>1.2<br>1.4<br>1.7 | <br>.9<br>.95<br>2.4 |

[1] Measured with average reading DC ammeter. Instantaneous +12 V current peaks will exceed these values.

[2] For +12 V, a –10% droop is permissible during initial start of spindle, and must return to ±5% before 7,200 rpm is reached. The ±5% must be maintained after the drive signifies that its power-up sequence has been completed and that the drive is able to accept selection by the host initiator.

[3] See +12 V current profile in Figure 3a.

[4] This condition occurs when the Motor Start Option is enabled and the drive has not yet received a Start Motor command.

[5] See Section 6.2.1 “Conducted Noise Immunity.” Specified voltage tolerance is inclusive of ripple, noise, and transient response.

[6] Operating condition is defined as random seek read operations with a block count of 64.

General Notes from Table 2:

1. Minimum current loading for each supply voltage is not less than 4% of the maximum operating current shown.
2. The +5 and +12 volt supplies shall employ separate ground returns.
3. Where power is provided to multiple drives from a common supply, careful consideration for individual drive power requirements should be noted. Where multiple units are powered on simultaneously, the peak starting current must be available to each device.

### 6.2.1 Conducted noise immunity

Noise is specified as a periodic and random distribution of frequencies covering a band from DC to 10 MHz. Maximum allowed noise values given below are peak to peak measurements and apply at the drive power connector.

+5 V = 150 mV pp from 0 to 50 kHz and 100 mV pp from 50 kHz to 10 MHz.
+12 V = 150 mV pp from 0 to 50 kHz and 100 mV pp from 50 kHz to 10 MHz.

### 6.2.2 Power sequencing

The drive does not require power sequencing. The drive protects against inadvertent writing during power-up and down. Daisy-chain operation requires that power be maintained on the terminated drive to ensure proper termination of the peripheral I/O cables. To automatically delay motor start based on the target ID (SCSI ID) enable the Delay Motor Start option and disable the Enable Motor Start option on the J2 connector. See Section 8.1 for pin selection information. To delay the motor until the drive receives a Start Unit command, enable the Enable Motor Start option on the J2 connector.

### 6.2.3 Current profile

Figures 3a and 3b identify the drive +5 V and +12 V current profile. The current during the various times is as shown:

T - Power is applied to the drive.
T1 - Controller self tests are performed.
T2 - Spindle begins to accelerate under current limiting after performing drive internal diagnostics. See Note 1 of Table 2.
T3 - The heads move from the landing zone to the data area.
T4 - The adaptive servo calibration sequence is performed.
T5 - Calibration is complete and the drive is ready for reading and writing.

**Note.** All times and currents are typical. See Table 2 for maximum current requirements.

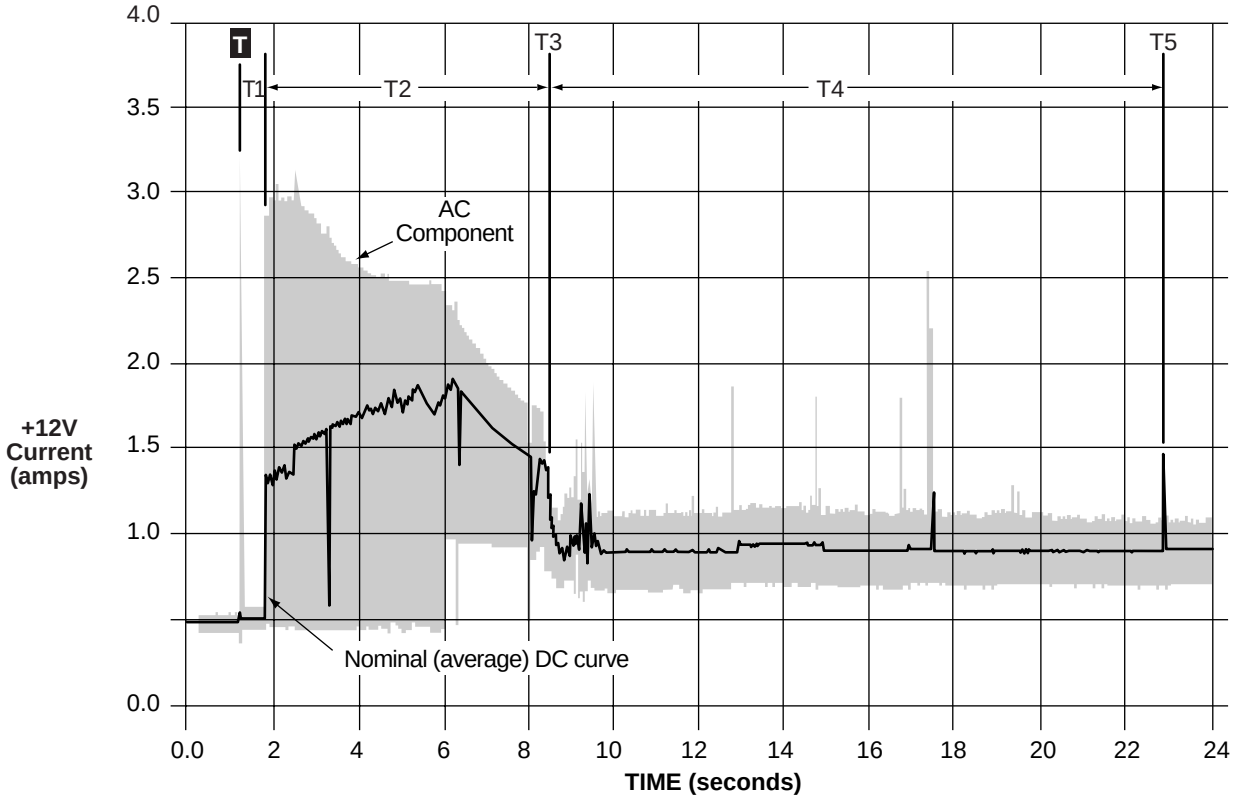


**Figure 3a. Typical Barracuda 9LP family drive +12 V current profile**

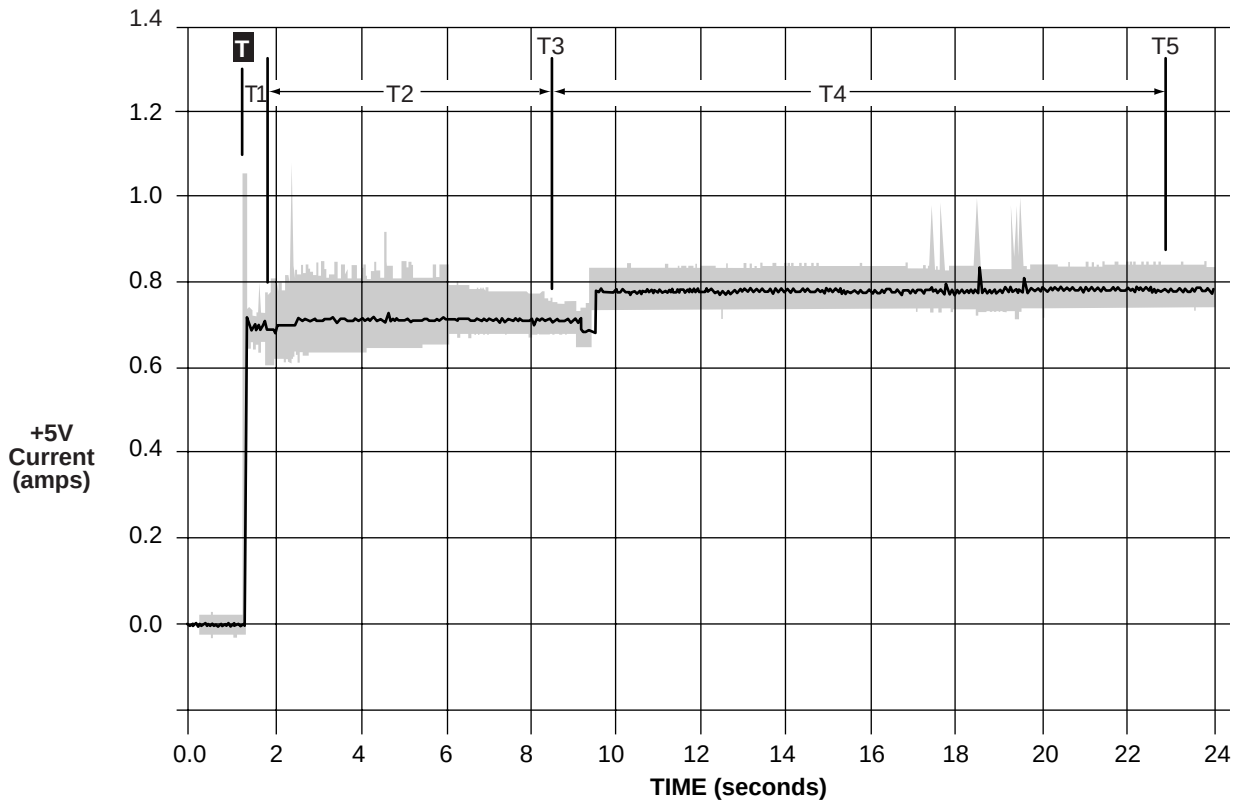


**Figure 3b. Typical Barracuda 9LP family drive +5 V current profile**

## 6.3 Power dissipation

For drives with single ended interface circuits, typical operating random read power dissipation is 16.05 watts (54.8 BTUs per hour) of DC power average at nominal voltages. Typical power dissipation under idle conditions is 9.75 watts (33.3 BTUs per hour).

For drives with high voltage differential interface circuits (HVD), typical operating random read power dissipation is 16.91 watts (57.8 BTUs per hour) of DC power average at nominal voltages. Typical power dissipation under idle conditions is 9.80 watts (33.5 BTUs per hour).

For drives with low voltage differential interface circuits (LVD), typical operating random read power dissipation is 16.8 watts (57.3 BTUs per hour) of DC power average at nominal voltages. Typical power dissipation under idle conditions is 9.75 watts (33.3 BTUs per hour).

## 6.4 Environmental limits

Temperature and humidity values experienced by the drive must be such that condensation does not occur on any drive part. Altitude and atmospheric pressure specifications are referenced to a standard day at 58.7°F (14.8°C). Maximum Wet Bulb temperature is 82°F (28°C).

### 6.4.1 Temperature

a. Operating

With cooling designed to maintain the case temperatures of Table 3, Column 2, the drive meets all specifications over a 41°F to 122°F (5°C to 50°C) drive ambient temperature range with a maximum temperature gradient of 36°F (20°C) per hour. The enclosure for the drive should be designed such that the temperatures at the locations specified in Table 3, column 1 are not exceeded. Air flow may be needed to achieve these temperature values (see Section 8.3 and 8.3.1). Operation at case temperatures [4] above these values may adversely affect the drives ability to meet specifications.

The MTBF specification for the drive is based on operating in an environment that ensures that the case temperatures specified in Table 3, column 2 are not exceeded. Occasional excursions to drive ambient tem-

peratures of 122°F (50°C) or 41°F (5°C) may occur without impact to specified MTBF. Air flow may be needed to achieve these temperatures (see Section 8.3.1). Continual or sustained operation at case temperatures above these values may degrade MTBF.

To confirm that the required cooling for the Barracuda electronics and HDA is provided, place the drive in its final mechanical configuration, perform random write/read operations. After the temperatures stabilize, measure the case temperature of the components listed in Table 3 (see notes [2] and [3]).

Operation of the drive at the maximum case temperature is intended for short time periods only. Continuous operation at the elevated temperatures will reduce product reliability.

**Table 3: PCB and HDA temperatures**

| Items in Figure 4 | Column 1 Maximum case [4] temperatures (°C) operating (50° ambient) [2] | Column 2 Maximum allowable case [4] temperatures (°C) to meet MTBF spec. |
|---|---|---|
| HDA [3] | 60 | 45 |
| U2 | 95 | 75 |
| U5 | 82 [7], 82 [6] | 62 [7], 62 [6] |
| U11 | 82 | 62 |
| U15 | 94 | 74 |
| XCVRs [5] | TBD | TBD |

**Note.**

[1] Section 8.3.1 describes the air-flow patterns to be used to meet case temperatures in column 2. Air flow should be opposite that shown in Section 8.3.1. Air velocity should be adequate to ensure that the case temperatures in Column 2 are not exceeded during drive operation.
[2] The temperatures in Column 1 are calculated and may not reflect actual operating values. Sufficient cooling air may be required to ensure that these values are not exceeded.
[3] Measure HDA temp at point labeled “HDA” on Figure 4.
[4] PCB mounted integrated circuit case.
[5] Model WD I/O transceivers
[6] Ultra SCSI
[7] Ultra2 SCSI

b. Non-operating

–40° to 158°F (–40° to 70°C) package ambient with a maximum gradient of 45°F (25°C) per hour. This specification assumes that the drive is packaged in the shipping container designed by Seagate for use with drive.

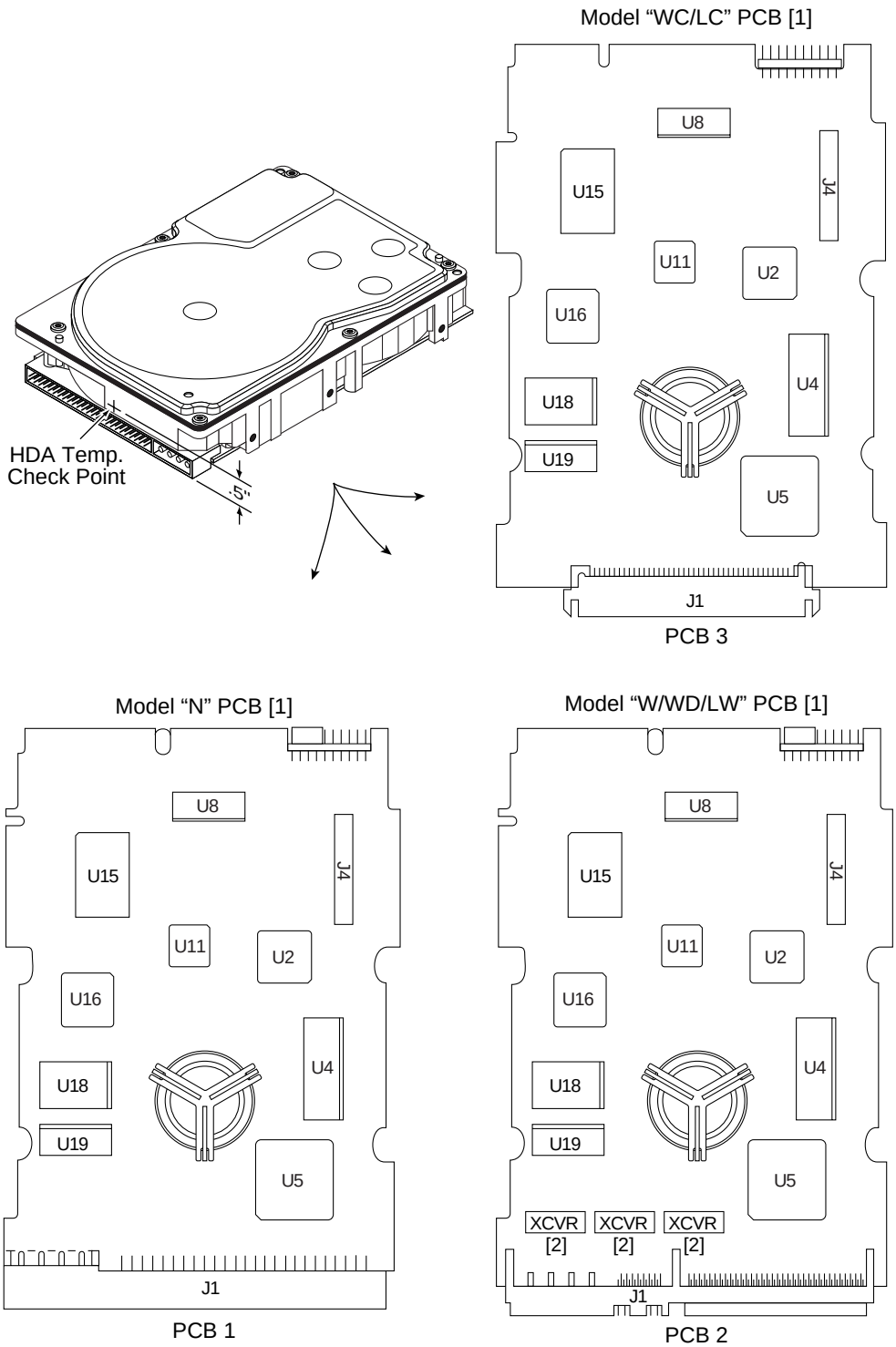


[1] Bottom side of PCB
[2] Applies only on “WD” model

**Figure 4. Locations of PCB components listed in Table 3**

### 6.4.2 Relative humidity

The values below assume that no condensation on the drive occurs.

a. Operating

5% to 95% non-condensing relative humidity with a maximum gradient of 10% per hour.

b. Non-operating

5% to 95% non-condensing relative humidity.

### 6.4.3 Effective altitude (sea level)

a. Operating

–1,000 to +10,000 feet (–305 to +3,048 meters)

b. Non-operating

–1,000 to +40,000 feet (–305 to +12,210 meters)

### 6.4.4 Shock and vibration

Shock and vibration limits specified in this document are measured directly on the drive chassis. If the drive is installed in an enclosure to which the stated shock and/or vibration criteria is applied, resonances may occur internally to the enclosure resulting in drive movement in excess of the stated limits. If this situation is apparent, it may be necessary to modify the enclosure to minimize drive movement.

The limits of shock and vibration defined within this document are specified with the drive mounted by any of the four methods shown in Figure 5, and in accordance with the restrictions of Section 8.4. Orientation of the side nearest the LED may be up or down.

#### 6.4.4.1 Shock

a. Operating—normal

The drive, as installed for normal operation, shall operate error free while subjected to intermittent shock not exceeding 5 Gs at a maximum duration of 11 msec (half sinewave). Shock may be applied in the X, Y, or Z axis.

b. Operating—abnormal

Equipment, as installed for normal operation, does not incur physical damage while subjected to intermittent shock not exceeding 10 Gs at a maximum duration of 11 msec (half sinewave). Shock occurring at abnormal levels may promote degraded operational performance during the abnormal shock period. Specified operational performance will continue when normal operating shock levels resume. Shock may be applied in the X, Y, or Z axis. Shock is not to be repeated more than two times per second.

c. Non-operating

The limits of non-operating shock shall apply to all conditions of handling and transportation. This includes both isolated drives and integrated drives.

The drive subjected to nonrepetitive shock not exceeding 75 Gs at a maximum duration of 11 msec (half sinewave) shall not exhibit device damage or performance degradation. Shock may be applied in the X, Y, or Z axis.

The drive subjected to nonrepetitive shock not exceeding 135 Gs at a maximum duration of 2 msec (half sinewave) does not exhibit device damage or performance degradation. Shock may be applied in the X, Y, or Z axis.

d. Packaged

Disc drives shipped as loose load (not palletized) general freight will be packaged to withstand drops from heights as defined in the table below. For additional details refer to Seagate specifications 30190-001 (under 100 lbs/45 kg) or 30191-001 (over 100 lbs/45 Kg).

| Package size | Packaged/product weight | Drop height |
|---|---|---|
| <600 cu in (<9,800 cu cm) | Any | 60 in (1524 mm) |
| 600-1800 cu in (9,800-19,700 cu cm) | 0-20 lb (0 to 9.1 kg) | 48 in (1219 mm) |
| >1800 cu in (>19,700 cu cm) | 0-20 lb (0 to 9.1 kg) | 42 in (1067 mm) |
| >600 cu in (>9,800 cu cm) | 20-40 lb (9.1 to 18.1 kg) | 36 in (914 mm) |

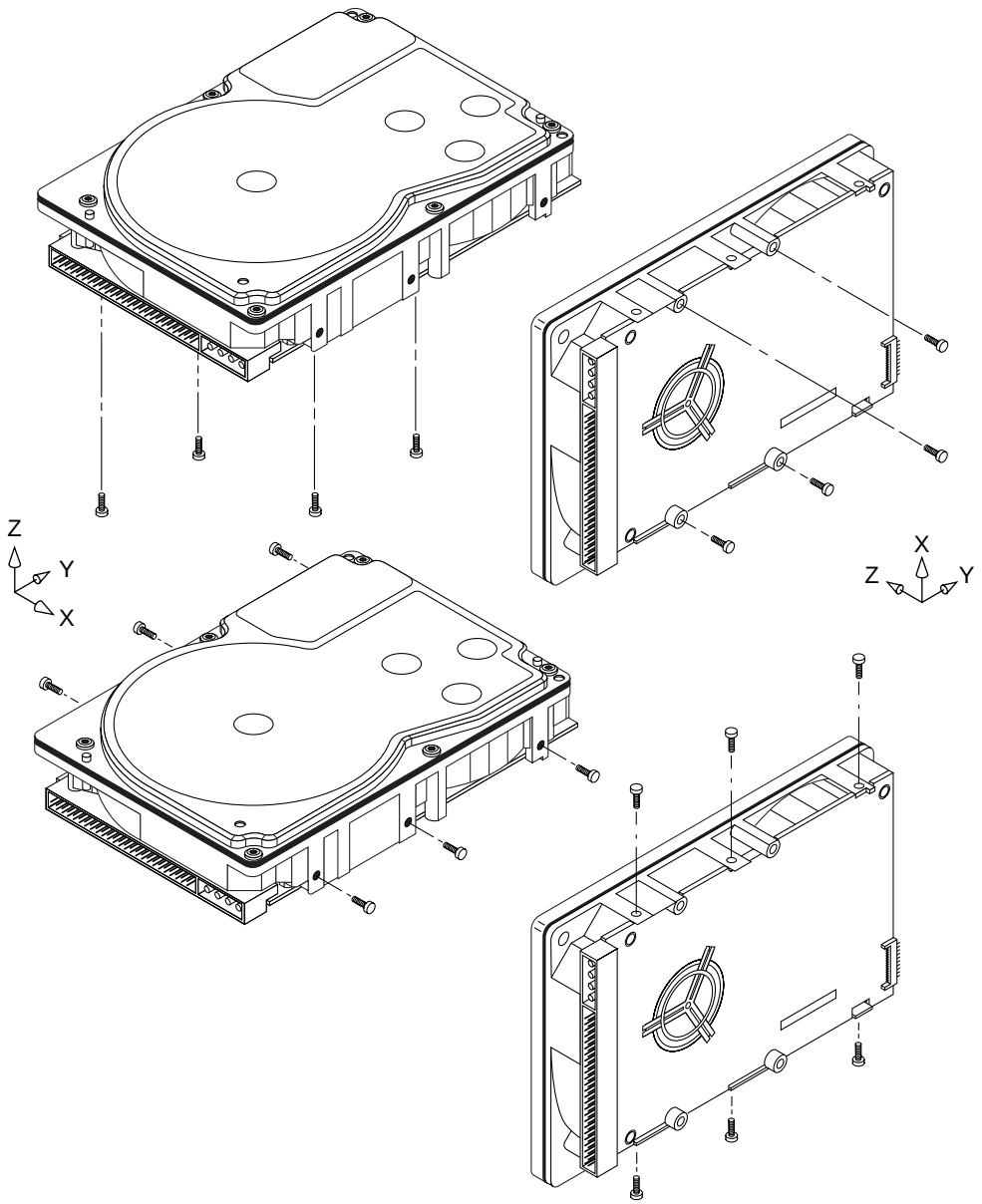


**Figure 5. Recommended mounting**

#### 6.4.4.2 Vibration

a. Operating - normal

The drive as installed for normal operation, shall comply with the complete specified performance while subjected to continuous vibration not exceeding

5-350 Hz @ 0.5 G

Vibration may be applied in the X, Y, or Z axis.

b. Operating - abnormal

5-350 Hz @ 0.75 G (X, Y, or Z axis)

c. Non-operating

The limits of non-operating vibration shall apply to all conditions of handling and transportation. This includes both isolated drives and integrated drives.

The drive shall not incur physical damage or degraded performance as a result of continuous vibration not exceeding

5-22 Hz @ 0.081 inches (2.05 mm) displacement
22-350 Hz @ 2.00 G

Vibration may be applied in the X, Y, or Z axis.

### 6.4.5 Air cleanliness

The drive is designed to operate in a typical office environment with minimal environmental control.

### 6.4.6 Acoustics

Sound power during idle mode shall be 4.2 bels typical when measured to Seagate's 30553-001 specification.

### 6.4.7 Electromagnetic susceptibility

See Section 2.1.2.

## 6.5 Mechanical specifications

The following nominal dimensions are exclusive of the decorative front panel accessory. However, dimensions of the front panel are shown in figure below. Refer to Figures 6a, 6b, and 6c for detailed mounting configuration dimensions. See Section 8.4, “Drive mounting.”

| | | |
|---|---|---|
| Height: | 1.000 in | 25.4 mm |
| Width: | 4.000 in | 101.6 mm |
| Depth: | 5.75 in | 146.05 mm |
| Weight: | 1.3 pounds | 0.589 kilograms |

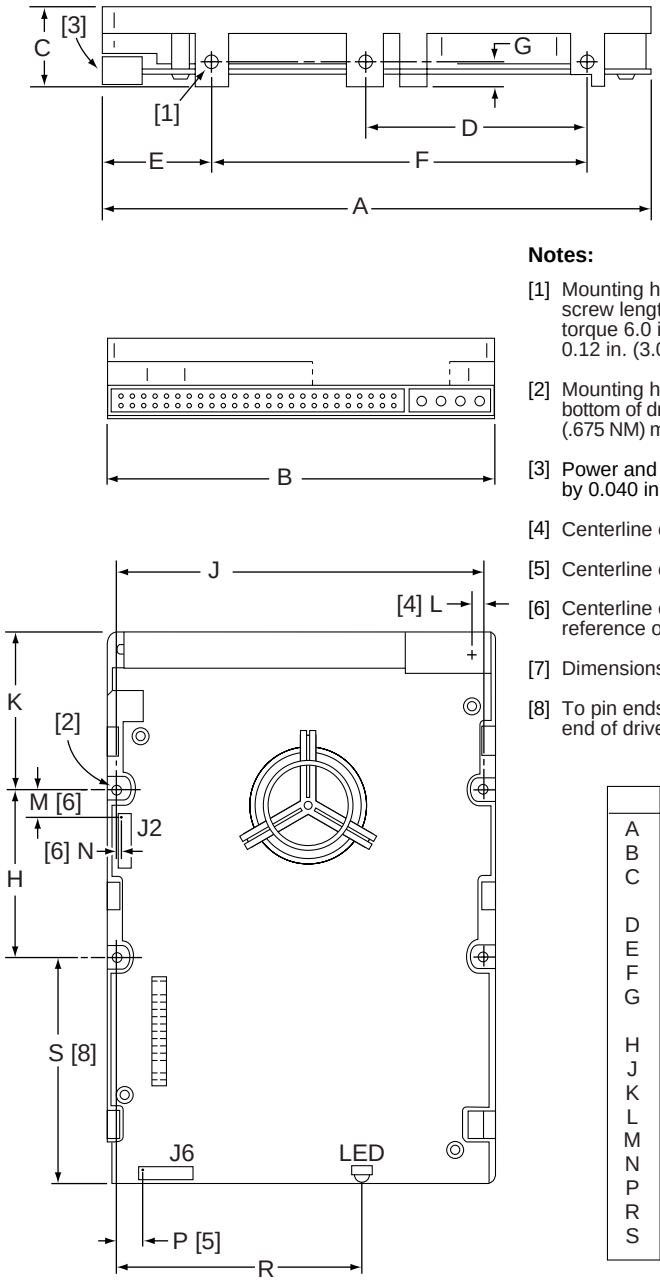


**Notes:**

[1] Mounting holes three on each side, 6-32 UNC. Max screw length into side of drive 0.15 in. (3.81 mm). Screw tightening torque 6.0 in-lb (.675 NM) max with minimum thread engagement of 0.12 in. (3.05 mm).

[2] Mounting holes four on bottom, 6-32 UNC. Max screw length into bottom of drive 0.15 in. (3.81 mm). Screw tightening torque 6.0 in-lb (.675 NM) max with minimum thread engagement of 0.12 in. (3.05 mm).

[3] Power and interface connectors can extend past the “A” dimension by 0.040 in. (1.02 mm).

[4] Centerline of pad for Pin 1 of power connector.

[5] Centerline of pad for Pin 1 of J6.

[6] Centerline of pad for Pin 1 of J2. Dimensions indicated are for reference only.

[7] Dimensions to Pin 1 of each connector are nominal values.

[8] To pin ends on J6. Pin ends on J6 are nominally flush with end of drive.

**Dimension Table**

| | Inches | | Millimeters | |
|---|---|---|---|---|
| A | 5.75 | ± .025 | 146.05 | ± .64 |
| B | 4.00 | ± .015 | 101.60 | ± .38 |
| C | 1.002 | + .027 – .21 | 25.45 | + .69 – .53 |
| D | 2.362 | ± .010 | 60.00 | ± .25 |
| E | 1.120 | ± .020 | 28.45 | ± .51 |
| F | 4.000 | ± .010 | 101.60 | ± .25 |
| G | .250 | + .010 – .005 | 6.35 | + .25 – .12 |
| H | 1.750 | ± .010 | 44.45 | ± .25 |
| J | 3.750 | ± .010 | 95.25 | ± .25 |
| K | 1.625 | ± .020 | 41.28 | ± .51 |
| L | .143 | [7] | 3.63 | [7] |
| M | .753 | [7] | 19.13 | [7] |
| N | .165 | [7] | 4.19 | [7] |
| P | .405 | [7] | 10.29 | [7] |
| R | 2.265 | [7] | 52.53 | [7] |
| S | 2.350 | [7] | 59.69 | [7] |

**Figure 6a. Mounting configuration dimensions for models “N”**

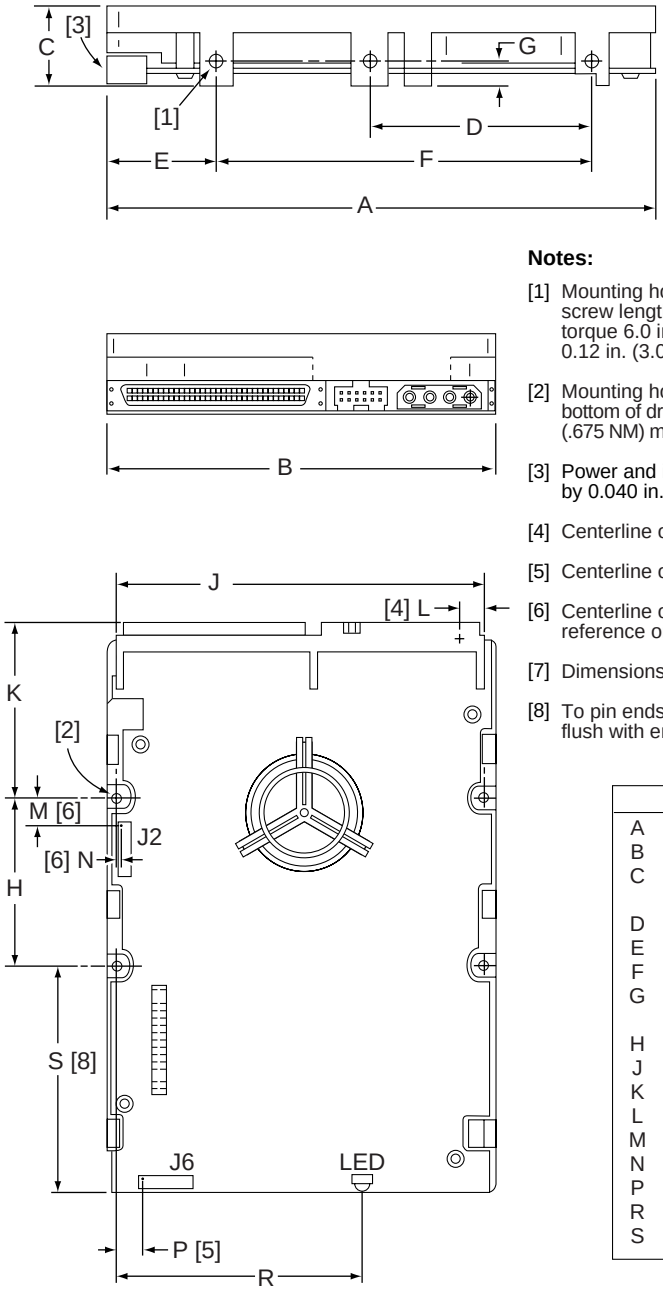


**Notes:**

[1] Mounting holes three on each side, 6-32 UNC. Max screw length into side of drive 0.15 in. (3.81 mm). Screw tightening torque 6.0 in-lb (.675 NM) max with minimum thread engagement of 0.12 in. (3.05 mm).

[2] Mounting holes four on bottom, 6-32 UNC. Max screw length into bottom of drive 0.15 in. (3.81 mm). Screw tightening torque 6.0 in-lb (.675 NM) max with minimum thread engagement of 0.12 in. (3.05 mm).

[3] Power and interface connectors can extend past the “A” dimension by 0.040 in. (1.02 mm).

[4] Centerline of pad for Pin 1 of power connector.

[5] Centerline of pad for Pin 1 of J6.

[6] Centerline of pad for Pin 1 of J2. Dimensions indicated are for reference only.

[7] Dimensions to Pin 1 of each connector are nominal values.

[8] To pin ends on J6. Pin ends on J6 are nominally flush with end of drive.

**Dimension Table**

| | Inches | | Millimeters | |
|---|---|---|---|---|
| A | 5.75 | ± .025 | 146.05 | ± .64 |
| B | 4.00 | ± .015 | 101.60 | ± .25 |
| C | 1.002 | + .027 – .21 | 25.45 | + .69 – .53 |
| D | 2.362 | ± .010 | 60.00 | ± .25 |
| E | 1.120 | ± .020 | 28.45 | ± .51 |
| F | 4.000 | ± .010 | 101.60 | ± .25 |
| G | .250 | + .010 – .005 | 6.35 | + .25 – .12 |
| H | 1.750 | ± .010 | 44.45 | ± .25 |
| J | 3.750 | ± .010 | 95.25 | ± .25 |
| K | 1.625 | ± .020 | 41.28 | ± .51 |
| L | .143 | [7] | 3.63 | [7] |
| M | .753 | [7] | 19.13 | [7] |
| N | .165 | [7] | 4.19 | [7] |
| P | .405 | [7] | 10.29 | [7] |
| R | 2.265 | [7] | 52.53 | [7] |
| S | 2.350 | [7] | 59.69 | [7] |

**Figure 6b. Mounting configuration dimensions for models “W,” “WD,” and “LW”**

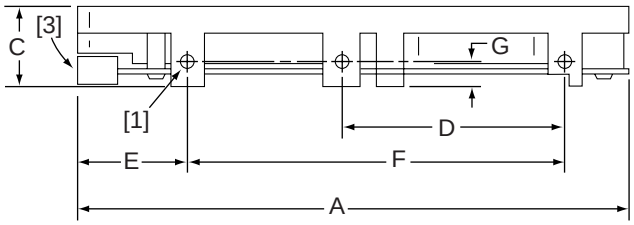


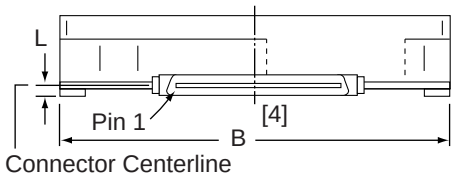


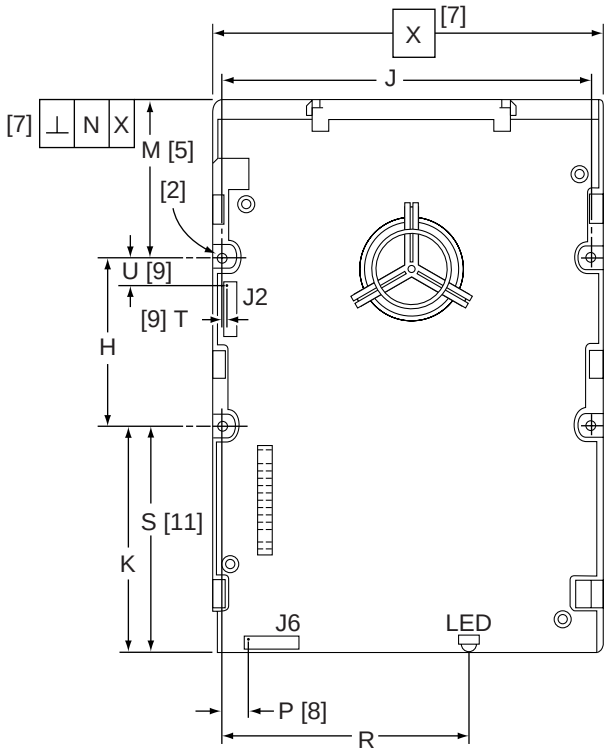


**Notes:**

[1] Mounting holes three on each side, 6-32 UNC. Max screw length into side of drive 0.15 in. (3.81 mm). Screw tightening torque 6.0 in-lb (.675 NM) max with minimum thread engagement of 0.12 in. (3.05 mm).

[2] Mounting holes four on bottom, 6-32 UNC. Max screw length into bottom of drive 0.15 in. (3.81 mm). Screw tightening torque 6.0 in-lb (.675 NM) max with minimum thread engagement of 0.12 in. (3.05 mm).

[3] Interface connector is flush with the end of drive within ±0.020 in. (.5 mm). The interface connector location may extend beyond HDA dimension “A” by 0.020 in. (.5 mm).

[4] Connector J1 is centered (side to side) on drive within ±0.020 in. (.508 mm).

[5] Dimension “M” is from bottom rear drive mounting holes center(s) to the face of the connector at the center of the drive.

[6] Dimensions “M” and “N” are unique requirements for SCA drives only, required for conformance with latest SFF Spec #8337.

[7] Maximum connector non-perpendicularity to side planes pointed to by X.

[8] Centerline of pad for Pin 1 of J6.

[9] Centerline of pad for Pin 1 of J2. Dimensions indicated are for reference only.

[10] Dimensions to Pin 1 of each connector are nominal values.

[11] To pin ends on J6. Pin ends on J6 are nominally flush with end of drive. Dimensions “K” and “S” may not be exactly the same.

**Dimension Table**

| | | Inches | | Millimeters | |
|---|---|---|---|---|---|
| | A | 5.75 | ± .025 | 146.05 | ± .64 |
| | B | 4.00 | ± .015 | 101.60 | ± .38 |
| | C | 1.002 | + .027 – .021 | 25.45 | + .69 – .53 |
| | D | 2.362 | ± .010 | 60.00 | ± .25 |
| | E | 1.120 | ± .020 | 28.45 | ± .51 |
| | F | 4.000 | ± .010 | 101.60 | ± .25 |
| | G | .250 | + .010 – .005 | 6.35 | + .25 – .12 |
| | H | 1.750 | ± .010 | 44.45 | ± .25 |
| | J | 3.750 | ± .010 | 95.25 | ± .25 |
| | K | TBD | ± TBD | TBD | ± TBD |
| | L | 0.181 | + .015 – .010 | 4.597 | + .38 – .25 |
| [6] | M | 1.625 | ± .02 | 41.28 | ± .50 |
| [7] | N | .015 | | .38 | |
| | P | .405 | [10] | 10.29 | [10] |
| | R | 2.265 | [10] | 52.53 | [10] |
| | S | 2.350 | [10] | 59.69 | [10] |
| | T | .165 | [10] | 4.19 | [10] |
| | U | .753 | [10] | 19.13 | [10] |

**Figure 6c. Mounting configuration dimensions for models “WC” and “LC”**

# 7.0 Defect and error management

The drive, as delivered, complies with this specification. The read error rate and specified storage capacity are not dependent upon use of defect management routines by the host (initiator).

Defect and error management in the SCSI system involves the drive internal defect/error management and SCSI systems error considerations (errors in communications between Initiator and the drive). Tools for use in designing a defect/error management plan are briefly outlined in this section, with references to other sections where further details are given.

## 7.1 Drive internal defects

During the initial drive format operation at the factory, media defects are identified, tagged as being unusable, and their locations recorded on the drive primary defects list (referred to as the “P” list and also as the EFT defect list). At factory format time, these known defects are also reallocated, that is, reassigned to a new place on the medium and the location listed in the defects reallocation table. The “P” list is not altered after factory formatting. Locations of defects found and reallocated during error recovery procedures after drive shipment are listed in the “G” list (defects growth list). The “P” and “G” lists may be referenced by the initiator using the Read Defect Data command (see Section 5.2.1.2 in the *SCSI Interface Product Manual,* part number 77738479).

## 7.2 Drive error recovery procedures

Whenever an error occurs during drive operation, the drive, if programmed to do so, performs error recovery procedures to attempt to recover the data. The error recovery procedures used depend on the options previously set up in the error recovery parameters mode page. Error recovery and defect management may involve the use of several SCSI commands, the details of which are described in the *SCSI Interface Product Manual.* The drive implements selectable error recovery time limits such as are required in video applications. For additional information on this, refer to Table 5.2.1-22 in the *SCSI Interface Product Manual* which describes the Mode Select/Mode Sense Error Recovery parameters.

The error recovery scheme supported by the drive provides a means to control the total error recovery time for the entire command in addition to controlling the recovery level for a single LBA. The total amount of time spent in error recovery for a command can be limited via the Recovery Time Limit bytes in the Error Recovery Mode Page. The total amount of time spent in error recovery for a single LBA can be limited via the Read Retry Count or Write Retry Count bytes in the Error Recovery Mode Page.

The drive firmware error recovery algorithms consist of 12 levels for read recoveries and 5 levels for writes.

Table 4 equates the Read and Write Retry Count with the maximum possible recovery time for read and write recovery of individual LBAs. The times given do not include time taken to perform reallocations, if reallocations are performed. Reallocations are performed when the ARRE bit (for reads) or AWRE bit (for writes) is one, the RC bit is zero, and the Recovery Time Limit for the command has not yet been met. Time needed to perform reallocation is not counted against the Recovery Time Limit.

The Read Continuous (RC) bit, when set to one, requests the disc drive to transfer the requested data length without adding delays (for retries or ECC correction) that may be required to insure data integrity. The disc drive may send erroneous data in order to maintain the continuous flow of data. The RC bit should only be used when data integrity is not a concern and speed is of utmost importance. If the Recovery Time Limit or retry count is reached during error recovery, the state of the RC bit is examined. If the RC bit is set, the drive will transfer the unrecovered data with no error indication and continue to execute the remaining command. If the RC bit is not set, the drive will stop data transfer with the last good LBA, and report a Check Condition, Unrecovered Read Error.

**Table 4: Read and write retry count maximum recovery times [1]**

| Read retry count | Maximum recovery time per LBA (cumulative, msec) |
|---|---|
| 0 | 91.9 |
| 1 | 108.7 |
| 2 | 125.4 |
| 3 | 158.8 |
| 4 | 209.0 |
| 5 | 275.9 |
| 6 | 342.8 |
| 7 | 468.2 |
| 8 | 551.8 |
| 9 | 618.6 |
| 10 | 769.1 |
| 11 | 2,229.1 |
| 12 (default) | 4,933.9 |

| Write retry count | Maximum recovery time per LBA (cumulative, msec) |
|---|---|
| 0 | 50.1 |
| 1 | 75.2 |
| 2 | 83.6 |
| 3 | 108.7 |
| 4 | 259.1 |
| 5 (default) | 317.7 |

[1] These values are subject to change.

Setting these retry counts to a value below the default setting could result in an increased unrecovered error rate which may exceed the value given in this product manual. A setting of zero results in the drive not performing error recovery.

For example, suppose the Read/Write Recovery page has the RC bit set to 0, the read retry count set to 4, and the Recovery Time Limit field (Mode Sense page 01, bytes 10 and 11) set to FF FF hex (maximum). A 4 LBA Read command is allowed to take up to 209 msec recovery time for each of the four LBAs in the command. If the recovery time limit is set to 00 C8 hex (200 msec decimal), a four LBA read command is allowed to take up to 200 msec for all error recovery within that command. The use of the Recovery Time Limit field allows finer granularity on control of the time spent in error recovery. The recovery time limit only starts counting when the drive is executing error recovery and it restarts on each command. Therefore, each command's total recovery time is subject to the recovery time limit. Note: A recovery time limit of 0 will use the drive's default value of FF FF. Minimum recovery time limit is achieved by setting the Recovery Time Limit field to 00 01.

### 7.3 SCSI systems errors

Information on the reporting of operational errors or faults across the interface is given in the *SCSI Interface Product Manual,* part number 77738479. Message Protocol System is described in the *SCSI Interface Product Manual*. Several of the messages are used in the SCSI systems error management system. The Request Sense command returns information to the host about numerous kinds of errors or faults. The Receive Diagnostic Results reports the results of diagnostic operations performed by the drive.

Status returned by the drive to the Initiator is described in the *SCSI Interface Product Manual*. Status reporting plays a role in the SCSI systems error management and its use in that respect is described in sections where the various commands are discussed.

# 8.0 Installation

The first thing to do when installing a drive is to set the drive ID (select) on the SCSI bus and set up certain operating options. This is usually done by installing small shorting jumpers on the pins of connectors J2 and J6 on the PCB (or J1-Auxiliary on the “W,” “WD,” and “LW” models), or via the drive to host I/O signals on “WC” and “LC” models. Some users connect cables to J6 or J1-Auxiliary and perform the set-up using remote switches.

If your system is “SCAM” (SCSI Configured Auto Magically) compliant, the system assigns the drive ID over the interface, so there is no need to be concerned about drive ID. Setting the drive ID jumpers doesn’t hurt anything, but is not necessary.

If your system is not “SCAM” compliant you do need to set the drive ID using the ID jumpers.

### Configure drive options

For option jumper locations and definitions refer to Figures 7a, 7b, 7c, 7d, 7e, and 7f. Drive default mode parameters are not normally needed for installation. Refer to Section 9.3.2 for default mode parameters if they are needed.

- Ensure that the SCSI ID of the drive is not the same as the host adapter. Most host adapters use SCSI ID 7. ID 7 is the highest priority on both 8 and 16 bit data buses.
- If multiple devices are on the bus set the drive SCSI ID to one that is not presently used by other devices on the bus.
- If the drive is the only device on the bus, attach it to the end of the SCSI bus cable. Permanently installed terminators must be enabled on the drive for “N” and “W” models using jumper plug **TE** if termination is not provided by the host equipment. On “WC,” “WD,” “LC,” and “LW” models, external terminators must be provided by the user, systems integrator or host equipment manufacturer.
- If the drive is attached to a bus that contains other devices, and the new drive is not attached to the end of the bus, the Terminator Enable jumper (**TE**) should be removed from the new drive.

**Note.** For additional information about terminator requirements, refer to Sections 9.8 and 9.9.

- Set all appropriate option jumpers for desired operation prior to power on. If jumpers are changed after power has been applied, recycle the drive power to make the new settings effective.
- Installation instructions are provided by host system documentation or with any additionally purchased drive installation software. If necessary see Section 10 for Seagate support services telephone numbers.
- Do not remove the manufacturer’s installed labels from the drive and do not cover with additional labels, as the manufacturer labels contain information required when servicing the product.

### Formatting

- It is not necessary to low level format this drive. The drive is shipped from the factory low level formatted in 512 byte sectors.
- Reformat the drive if a different spare sector allocation scheme is selected.
- High level format the drive involves assigning one or more partitions or logical drives to the drive volume. Follow the instructions in the system manuals for the system into which the drive is to be installed.
- Systems that have Windows 95 Operating System version 950B (this has FAT 32) or later do not need to partition the drive.

## 8.1 Drive ID/option select header

Figures 7a through 7c show views of the drive ID select jumper connectors. Figure 7d shows the option select jumper connector for all models. Figure 7b shows a rear view of model drives for the purpose of showing J1-auxiliary of the drive. Both J1-auxiliary and J6 have pins for selecting drive ID and for connecting the remote LED cable. Only one or the other should be used, although using both at the same time would not damage the drive. The notes following the figures describe the functions of the various jumper positions on the connectors J2, J1-Auxiliary and J6. Suggested part number for the jumpers used on J2 is 3M part number 956562-30 (Seagate part number 89501860). A bag with the two jumper plug types is shipped with the standard OEM drives.

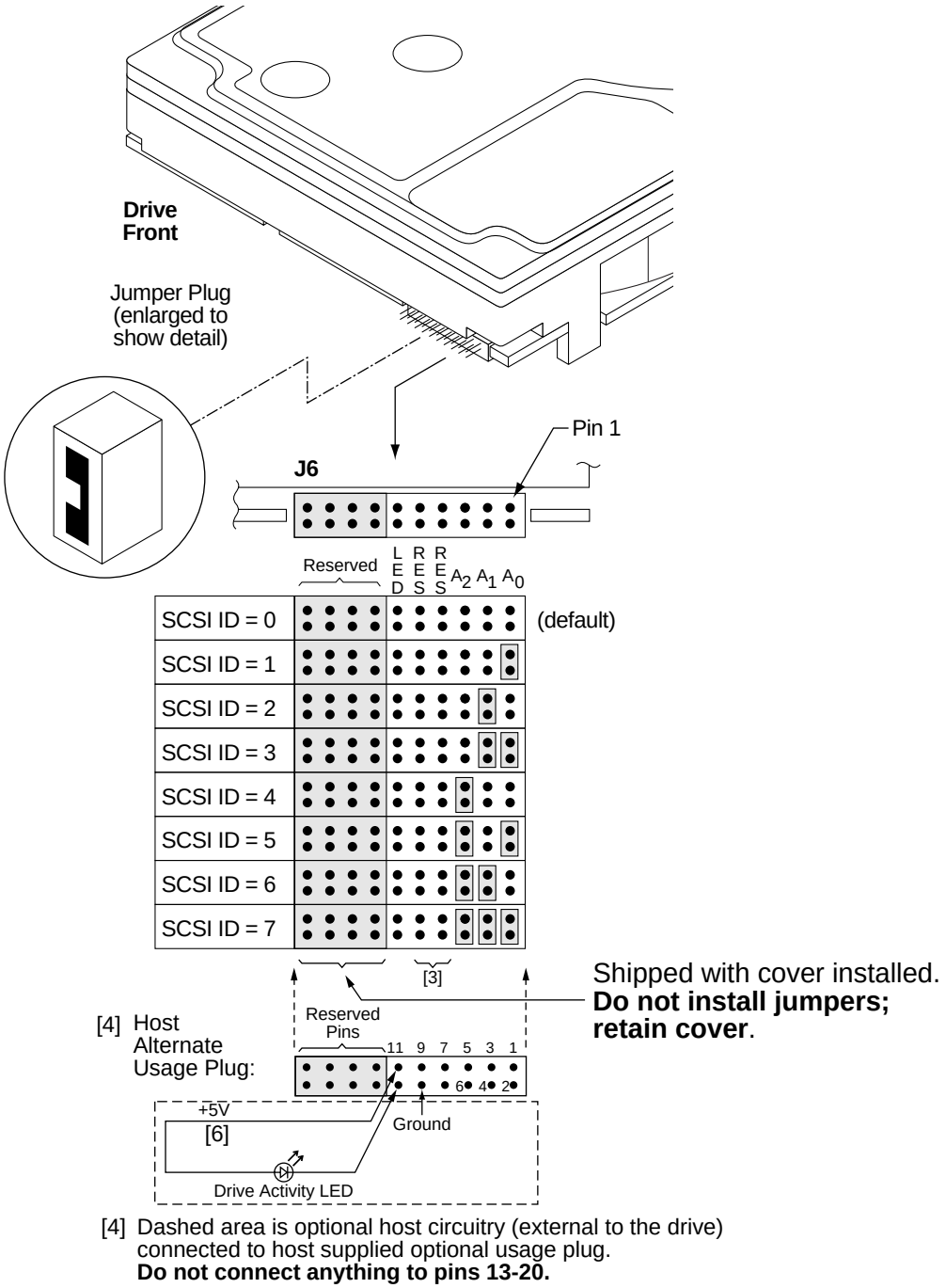


[4] Dashed area is optional host circuitry (external to the drive) connected to host supplied optional usage plug.
**Do not connect anything to pins 13-20.**

**Figure 7a. Barracuda 9LP family drive ID select header for models "N"**

Notes for Figures 7a through 7f are in Section 8.1.1.

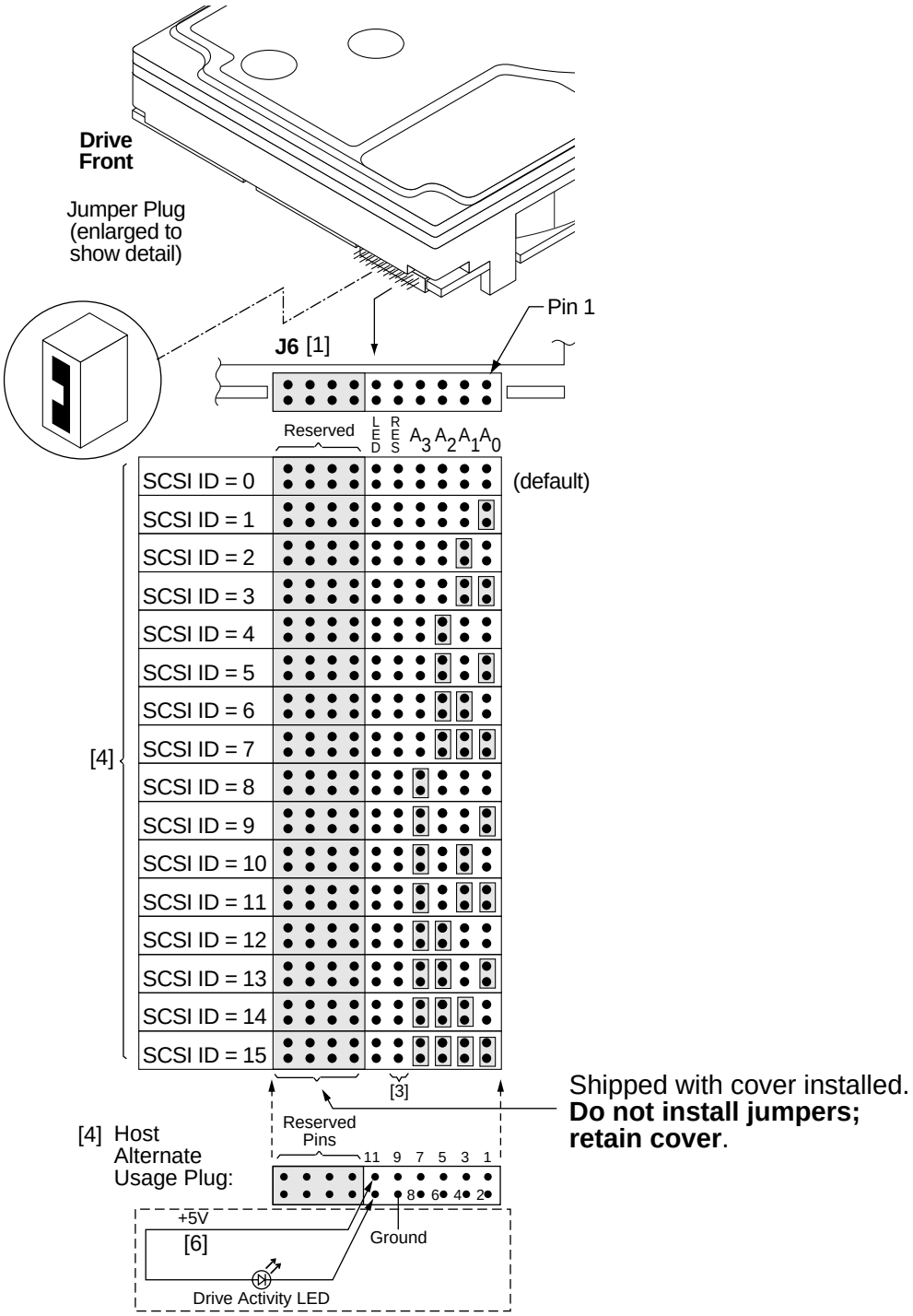


[4] Dashed area is optional host circuitry (external to the drive) connected to host supplied optional usage plug.
**Do not connect anything to pins 13-20.**

**Figure 7b. Barracuda 9LP family drive ID select for models "W," "WC," "WD," "LW," and "LC"**

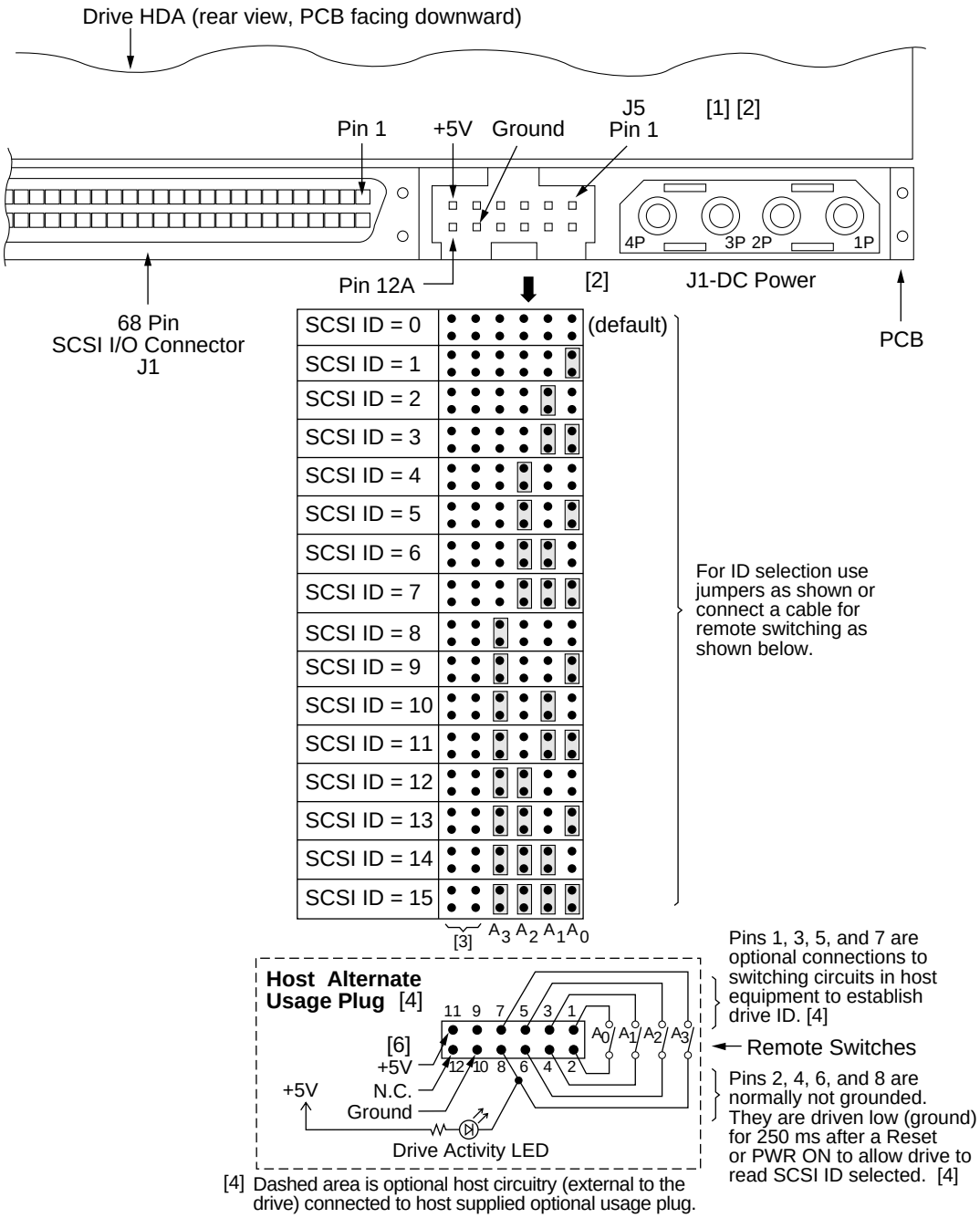


**Figure 7c. Barracuda 9LP family drive ID select header J5 for models “W,” “LW,” and “WD” (J5 Pins 1A - 12A)**

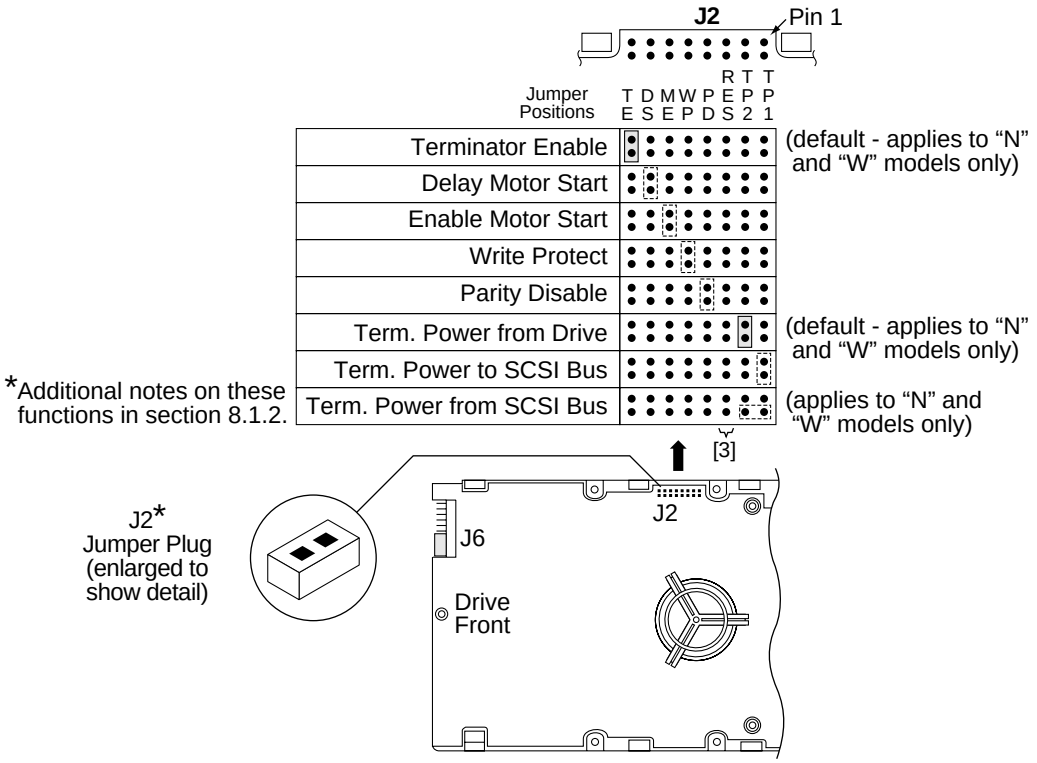


**Figure 7d. Barracuda 9LP family drive option select header for models "N," "W," and "WD"**

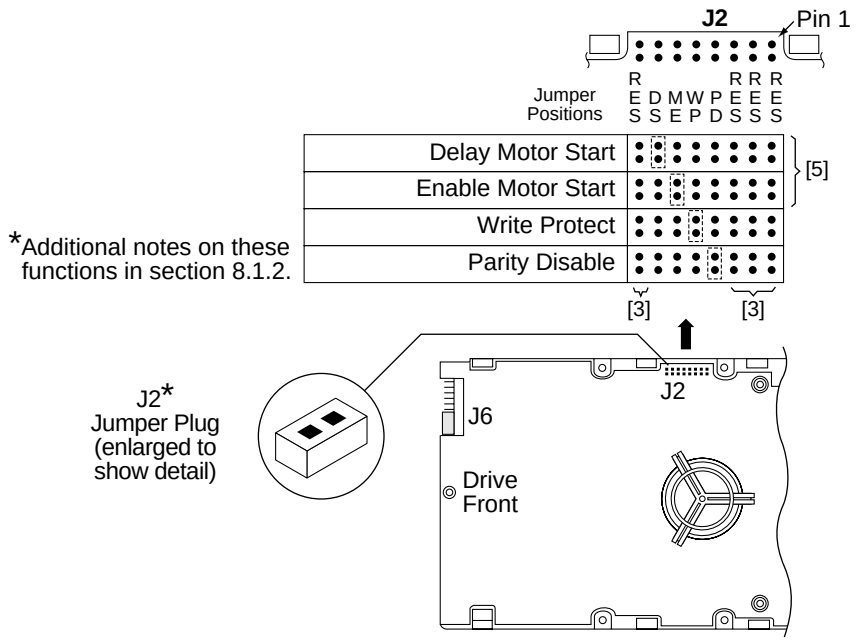


**Figure 7e. Barracuda 9LP family drive option select header for "WC" model**

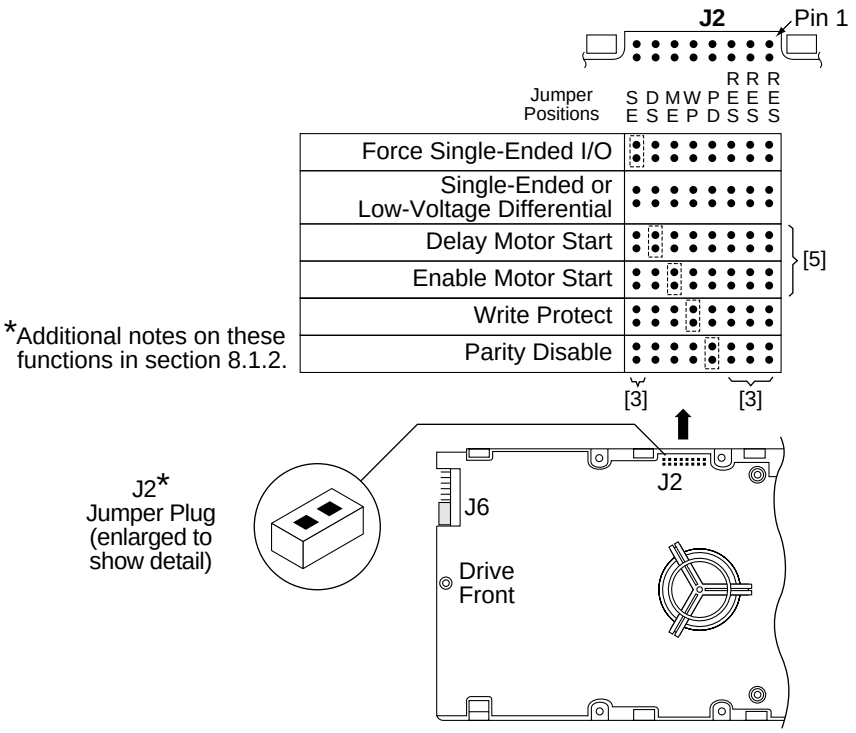


**Figure 7f. Barracuda 9LP family drive option select header for models "LC" and "LW"**

### 8.1.1 Notes for Figures 7a, 7b, 7c, 7d, 7e, and 7f.

[1] Notes explaining the functions of the various jumpers on jumper header connectors J2, J5, and J6 are given here and in Section 8.1.2. The term "**default**" means as standard OEM units are configured with a jumper on those positions when shipped from factory. "Off" means no jumper is installed; "On" means a jumper is installed. OFF or ON underlined is factory **default** condition.

[2] The PCB on "N," "WC," and "LC" model drives does not have connector J5. The J5 connector signals conform to SFF-8009 Revision 2.0, Unitized Connector for Cabled Drives, signal assignments for auxiliary connectors. See note [4].

[3] Reserved useage. Do not install any jumpers.

[4] Table 5 summarizes the configuration selection possibilities available on the different Barracuda 9LP model drives.

[5] These signals are also on 80 pin J1. See Table 13e.

[6] Voltage supplied by the drive.

**Table 5: Drive configuration selections summary**

| Interface type | Function | Connector | | | | Applicable figure |
|---|---|---|---|---|---|---|
| | | J1 | J6 | J5 | J2 | |
| N | Drive ID | | X | none | | 7a |
| N | Drive Activity LED | | Y [c] | none | | 7a |
| N | Option select | | | none | X | 7d |
| W, WD, LW | Drive ID | | X | X, Y [e] | | 7b, 7c [a] |
| W, WD, LW | Drive Activity LED | | Y [c] | Y [c] | | 7b, 7c [a] |
| W, WD, LW | Option select | | | | X | 7d |
| WC, LC | Drive ID | Y[f] | X | none | | 7b [d] |
| WC, LC | Drive Activity LED | Y[b][c] | Y [c] | none | | 7b [d] |
| WC, LC | Option select: | | | | | |
| All | Delayed Mtr Start | Y[b] | | none | X | 7e, 7f |
| All | Enable Mtr Start | Y[b] | | none | X | 7e, 7f |
| All | Write Protect | | | none | X | 7e, 7f |
| All | Parity Disable | | | none | X | 7e, 7f |
| LC, LW | SE (force single-ended) | | | | X | 7f |

("X" means the function selection can be made with jumpers on that connector;
"Y" means the signal is available to host through that connector.)

**Notes for Table 5 [ ]:**

[a] Use either J6 or J5, but not both.

[b] I/O connector J1 plugs directly into host. No jumper can be installed on J1. The host supplies the logic state of these function signals causing the selection of these functions. See pinout Table 13e.

[c] The host can drive a remotely located Drive Activity LED using signal.

[d] Use either J1 or J6, but not both.

[e] The drive reads the ID (asserted low) from J5 pins 1, 3, 5 and 7 for 250 ms after power-on or drive reset. Jumper plugs can be used on J5 pins 1-2, 3-4, 5-6 and 7-8 to set drive ID if desired, but usually a connector/cable is plugged to J5 to run these signals to the host for remote ID selection.

[f] The host selects drive ID through J1.

### 8.1.2 Function description

| J2 jumper installation | | Jumper function description |
|---|---|---|
| **TE** | | **(Applies only to “N” and “W” models)** |
| On | | With the jumper installed, the On-board (non-removable) terminator circuits are enabled (connected to the I/O lines). **Default** is jumper installed. |
| Off | | Terminator circuits not enabled (not connected to I/O lines). |
| **SE** | | **(Applies to “LC” and “LW” models only)** |
| On | | Forces drive to use single-ended I/O drivers/receivers only. |
| Off | | Drive can operate on the interface in low voltage differential mode or single-ended, depending on the voltage state of the I/O “DIFFSENS” line. **Default** is no jumper on. |
| **DS** | **ME** | **(Applies to all models)** |
| Off | Off | Spindle starts immediately after power up—**Default** setting. |
| Off | On | Drive spindle does not start until Start Unit command received from host. |
| On | Off | Spindle Startup is delayed by SCSI ID times 12 seconds after power is applied, i.e., drive 0 spindle starts immediately when DC power connected, drive 1 starts after 12 second delay, drive 2 starts after 24 second delay, etc. |
| On | On | Drive spindle starts when Start Unit command received from host. Delayed start feature is overridden and does not apply when **ME** jumper is installed. |
| **WP** | | **(Applies to all models)** |
| On | | Entire drive is write protected. |
| Off | | Drive is not write protected. **Default** is no **WP** jumper installed. |
| **PD** | | **(Applies to all models)** |
| On | | Parity checking and parity error reporting by the drive is disabled. |
| Off | | Drive checks for parity and reports result of parity checking to host. **Default** is **PD** jumper not installed. |
| **RES** | | **(Applies to all models)** |
| Off | | Reserved jumper position. Default is no jumper installed. |
| **TP2** | **TP1** | **(Does not apply to “WC” model)** |
| Off | Off | No terminator power is connected to drive terminators or SCSI bus I/O cable*. |
| On | Off | Drive supplies its own terminator power only. Jumper on this position is factory **default**. |
| Off | On | Drive supplies power to SCSI bus I/O cable*; none to internal terminators. When drives have differential I/O circuits, a jumper on the **TP1** position may be needed to power external terminators (see system documentation). The “WD” drives have differential I/O circuits which have no terminator circuits on the drive. |
| On | On | Drive supplies terminator power to itself (internal connection) and to SCSI bus I/O cable*. This is a legal jumper setting. |
| **TP1 and TP2 “Position A”** | | **(Applies only to “N” and “W”)** |
| On | | This horizontally positioned jumper across the two **TP** positions furthest from the PCB edge, connects terminator power from SCSI bus I/O Termpower cable* to the drive’s internal terminators (for single-ended I/O only). |
| Off | | See above explanations for **TP** jumpers. |

*See Figure 7d for pins used for Termpower.

## 8.2 Drive orientation

The balanced rotary arm actuator design of the drive allows it to be mounted in any orientation. All drive performance characterization, however, has been done with the drive in horizontal (discs level) and vertical (drive on its side) orientations, and these are the two preferred mounting orientations.

## 8.3 Cooling

Cabinet cooling must be designed by the customer so that the ambient temperature immediately surrounding the drive will not exceed temperature conditions specified in Section 6.4.1, “Temperature.” Specific consideration should be given to make sure adequate air circulation is present around the printed circuit board (PCB) to meet the requirements of Section 6.4.1, “Temperature.”

### 8.3.1 Air flow

The rack, cabinet, or drawer environment for the Barracuda 9LP drive must provide heat removal from the electronics and head and disc assembly (HDA). You should confirm that adequate heat removal is provided using the temperature measurement guidelines described in Section 6.4.1.

Forced air flow may be required to keep temperatures at or below the specified case temperatures of Table 3, Column 2, in which case the drive should be oriented, or air flow directed, so that the least amount of air flow resistance is created while providing air flow to the electronics and HDA. Also, the shortest possible path between the air inlet and exit should be chosen to minimize the travel length of air heated by the drive and other heat sources within the rack, cabinet, or drawer environment.

If forced air is determined to be necessary, possible air-flow patterns are shown in Figure 8. The air-flow patterns are created by one or more fans, either forcing or drawing air as shown in the illustrations. Conduction, convection, or other forced air-flow patterns are acceptable as long as the temperature measurement guidelines of Section 6.4.1 are met.

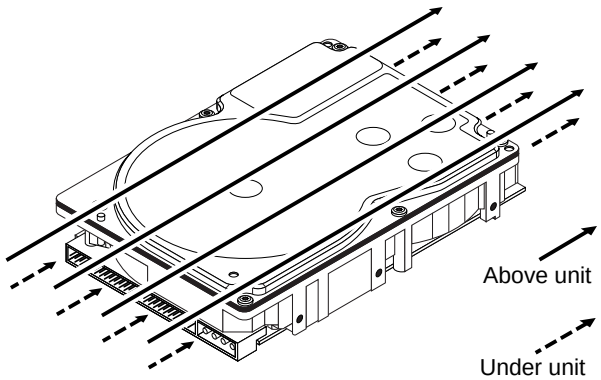


**Note.** Air flows in the direction shown (front to back) or in reverse direction (back to front)

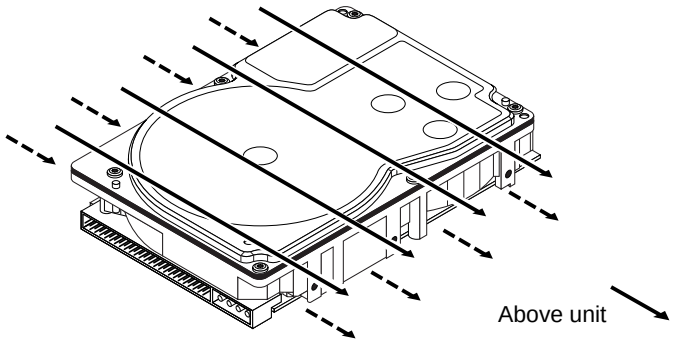


**Note.** Air flows in the direction shown or in reverse direction (side to side)

**Figure 8. Air flow (suggested)**

## 8.4 Drive mounting

When mounting the drive using the bottom holes (x-y plane in Figure 5) care must be taken to ensure that the drive is not physically distorted due to a stiff non-flat mounting surface. The allowable mounting surface stiffness is 80 lb/in (14.0 N/mm). The following equation and paragraph define the allowable mounting surface stiffness:

$$K = \frac{F}{x} = 80\,\text{lb/in}\ (14.0\ \text{N/mm})$$

where ‘k’ represents the mounting surface stiffness (units of lb/in or N/mm), and ‘x’ represents the out-of-plane mounting surface distortion (units of inches or millimeters). The out-of-plane distortion (‘x’) is determined by defining a plane with three of the four mounting points fixed and evaluating the out-of-plane deflection of the fourth mounting point when a known force is applied to the fourth point.

**Note.** Before mounting the drive in any kind of 3.5-inch to 5.25-inch adapter frame, verify with Seagate Technology that the drive can meet the shock and vibration specifications given herein while mounted in such an adapter frame. Adapter frames that are available may not have a mechanical structure capable of mounting the drive so that it can meet the shock and vibration specifications listed in this manual.

## 8.5 Grounding

Signal ground (PCB) and HDA ground are connected together in the drive and cannot be separated by the user. The equipment in which the drive is mounted is connected directly to the HDA and PCB with no electrically isolating shock mounts. If it is desired for the system chassis to not be connected to the HDA/PCB ground, the systems integrator or user must provide a nonconductive (electrically isolating) method of mounting the drive in the host equipment.

Increased radiated emissions may result if you do not provide the maximum surface area ground connection between system ground and drive ground. This is the system designer’s and integrator’s responsibility.

# 9.0 Interface requirements

## 9.1 General description

This section describes in essentially general terms the interface requirements supported by the Barracuda 9LP. No attempt is made to describe all of the minute details of conditions and constraints that must be considered by designers when designing a system in which this family of drives can properly operate. Seagate declares that the drives operate in accordance with the appropriate ANSI Standards referenced in various places herein, with exceptions as noted herein or in the Seagate *SCSI Interface Product Manual*, part number 77738479.

## 9.2 SCSI interface messages supported

Table 6 lists the messages supported by the SCSI-2 and SCSI-3 modes of the Barracuda 9LP family drives.

**Table 6: SCSI messages supported by Barracuda 9LP family drives**

| Message name | Message code | Supported by Barracuda 9LP |
|---|---|---|
| Abort | 06h | Y |
| Abort-tag | 0Dh | Y |
| Bus device reset | 0Ch | Y |
| Clear queue | 0Eh | Y |
| Command complete | 00h | Y |
| Continue I/O process | 12h | Y |
| Disconnect | 04h | Y |
| Extended messages | 01h[1] | Y |
| Identify | 80h-FFh | Y |
| Ignore wide residue (two bytes) | 23h | Y |
| Initiate recovery | 0Fh | N |
| Initiator detected error | 05h | Y |
| Linked command complete | 0Ah | Y |
| Linked command complete with flag | 0Bh | Y |
| Message parity error | 09h | Y |
| Message reject | 07h | Y |
| Modify data pointer | [1] | N |
| No operation | 08h | Y |
| Queue tag messages (two bytes) | | |
| Head of queue tag | 21h | Y |
| Ordered queue tag | 22h | Y |
| Simple queue tag | 20h | Y |
| Release recovery | 10h | N |
| Restore pointers | 03h | Y |
| Save data pointer | 02h | Y |
| Synchronous data transfer req. | [1] | Y |
| Target transfer disable | 13h | Y |
| Terminate I/O process | 11h | N |
| Wide data transfer request | [1] [2] | Y |

**Notes.**

[1] Extended messages (see the *SCSI Interface Product Manual,* part number 77738479).

[2] Not applicable to “N” models.

## 9.3 SCSI interface commands supported

Table 7 following lists the SCSI interface commands that are supported in the SCSI-2, and SCSI-3 modes of the drive. Barracuda 9LP Family drives can be changed back and forth between SCSI-1 and SCSI-2/SCSI-3 modes using the Change Definition Command. OEM standard drives are shipped set to operate in SCSI-2/ SCSI-3 mode.

**Table 7: Commands supported by Barracuda 9LP family drive**

| Command name | Command code | Supported by Barracuda 9LP |
|---|---|---|
| Change definition | 40h | Y |
| Compare | 39h | N |
| Copy | 18h | N |
| Copy and verify | 3Ah | N |
| Format unit [1] | 04h | Y |
| Block Format | | N |
| Bytes from index | | Y |
| Physical sector format | | Y |
| DPRY bit supported | | Y |
| DCRT bit supported | | Y |
| STPF bit supported | | Y |
| IP bit supported | | Y |
| DSP bit supported | | Y |
| IMMED bit supported | | Y |
| VS (vendor specific) | | N |
| Inquiry (see Table 8 for Inquiry Data) | 12h | Y |
| Date code page (C1h) | | Y |
| Device Behavior page (C3h) | | Y |
| Firmware numbers page (C0h) | | Y |
| Implemented operating def page (81h) | | Y |
| Jumper settings page (C2h) | | Y |
| Supported Vital product data page (00h) | | Y |
| Unit serial number page (80h) | | Y |
| Lock-unlock cache | 36h | N |
| Log select | 4Ch | Y |
| DU bit | | N |
| DS bit | | Y |
| TSD bit | | Y |
| ETC bit | | N |
| TMC bit | | N |
| LP bit | | N |
| Log sense | 4Dh | Y |
| Cache statistics page (37h) | | Y |
| Non-medium error page (06h) | | N |
| Pages supported list (00h) | | Y |
| Power-on time page (3Eh) | | Y |
| Read error counter page (03h) | | Y |
| S.M.A.R.T. status log page (2Fh) | | Y |
| S.M.A.R.T. attitude log page (02h) | | Y |
| Verify error counter page (05h) | | Y |
| Write error counter page (02h) | | Y |
| Mode select (same pages as Mode Sense command) | 15h | Y [2] |

**Table 7: Commands supported by Barracuda 9LP family drive (Continued)**

| Command name | Command code | Supported by Barracuda 9LP |
|---|---|---|
| Mode select (10) | 55h | Y |
| Capacity Programming | | Y |
| Mode sense | 1Ah | Y [2] |
| Caching parameters page (08h) | | Y |
| Control mode page (0Ah) | | Y |
| Disconnect/reconnect (02h) (DTDC, DIMM not used) | | Y |
| Error recovery page (01h) | | Y |
| Format page (03h) | | Y |
| Information exceptions control page (1Ch) | | Y |
| Notch and Partition Page (0Ch) | | N |
| Power condition page (1Ah) | | Y |
| Rigid disc drive geometry page (04h) | | Y |
| Unit attention page (00h) | | Y |
| Verify error recovery page (07h) | | Y |
| Xor Control page (10h) | | N |
| Mode sense (10) | 5Ah | Y |
| Prefetch | 34h | N |
| Read | 08h | Y |
| Read buffer (modes 0, 2, 3 supported) | 3Ch | Y |
| Read capacity | 25h | Y |
| Read defect data | 37h | Y |
| Read extended | 28h | Y |
| DPO bit supported | | Y |
| FUA bit supported | | Y |
| Read long | 3Eh | Y |
| Reassign blocks | 07h | Y |
| Rebuild | 81h | N |
| Receive diagnostic results | 1Ch | Y |
| Supported diagnostics pages (00h) | | Y |
| Translate page (40h) | | Y |
| Regenerate | 82h | N |
| Release | 17h | Y |
| Release (10) | 57h | Y |
| Request sense | 03h | Y |
| Actual retry count bytes | | Y |
| Deferred error supported | | Y |
| Extended sense | | Y |
| Field pointer bytes | | Y |
| Reserve | 16h | Y |
| 3rd party reserve | | Y |
| Extent reservation | | N |
| Reserve (10) | 56h | Y |
| 3rd part reserve | | Y |
| Extent reservation | | N |
| Rezero unit | 01h | Y |
| Search data equal | 31h | N |
| Search data high | 30h | N |

**Table 7: Commands supported by Barracuda 9LP family drive (Continued)**

| Command name | Command code | Supported by Barracuda 9LP |
|---|---|---|
| Search data low | 32h | N |
| Seek | 0Bh | Y |
| Seek extended | 2Bh | Y |
| Send diagnostics | 1Dh | Y |
| Supported diagnostics pages (00h) | | Y |
| Translate page (40h) | | Y |
| Set limits | 33h | N |
| Start unit/stop unit (spindle ceases rotating) (1Ch) | 1Bh | Y |
| Synchronize cache | 35h | Y |
| Test unit ready | 00h | Y |
| Verify | 2Fh | Y |
| DPO bit supported | | Y |
| BYTCHK bit supported | | Y |
| Write | 0Ah | Y |
| Write and verify | 2Eh | Y |
| DPO bit supported | | Y |
| BYTCHK bit supported | | Y |
| Write buffer (modes 0, 2, supported) | 3Bh | Y |
| Firmware download option (modes 5, 7 supported) [3] | | Y |
| Write extended | 2Ah | Y |
| DPO bit supported | | Y |
| FUA bit support | | Y |
| Write long | 3Fh | Y |
| Write same | 41h | Y |
| PB data | | N |
| LB data | | N |
| XDRead | 52h | N |
| XDWrite | 50h | N |
| XDWrite extended | 80h | N |
| XPWrite | 51h | N |

[1] The drive can format to any even number of bytes per sector from 512 to 4,096

[2] Tables 9a and 9b show how individual bits are set and which are changeable by the host.

[3] **WARNING:** A power loss during flash programming can result in firmware corruption. This usually makes the drive inoperable.

Table 8 lists the Standard Inquiry command data that the drive should return to the initiator per the format given in the *SCSI Interface Product Manual,* part number 77738479, Section 5.1.1.3.

**Table 8: Barracuda 9LP family drive Standard Inquiry data**

| Bytes | Data (HEX) | | | | | | | | | | | | | | | | |
|---|---|---|---|---|---|---|---|---|---|---|---|---|---|---|---|---|---|
| 0-15 | 00 | 00 | [02][1] | [02][2] | 8B | 00 | [00][6] | [1E][3] | 53 | 45 | 41 | 47 | 41 | 54 | 45 | 20 | VENDOR ID |
| 16-31 | 53 | 54 | [33] | [39] | [31] | [37] | [33] | [4E] | [20][4] | 20 | 20 | 20 | 20 | 20 | 20 | 20 | PRODUCT ID |
| 32-47 | R# | R# | R# | R# | S# | S# | S# | S# | S# | S# | S# | S# | 00 | 00 | 00 | 00 | |
| 48-63 | 00 | 00 | 00 | 00 | 00 | 00 | 00 | 00 | 00 | 00 | 00 | 00 | 00 | 00 | 00 | 00 | |
| 64-79 | 00 | 00 | 00 | 00 | 00 | 00 | 00 | 00 | 00 | 00 | 00 | 00 | 00 | 00 | 00 | 00 | |
| 80-95 | 00 | 00 | 00 | 00 | 00 | 00 | 00 | 00 | 00 | 00 | 00 | 00 | 00 | 00 | 00 | 00 | |
| 96-111 | 00 | 43 | 6F | 70 | 79 | 72 | 69 | 67 | 68 | 74 | 20 | 28 | 63 | 29 | 20 | [31] | COPYRIGHT |
| 112-127 | [39] | [39] | [37][5] | 20 | 53 | 65 | 61 | 67 | 61 | 74 | 65 | 20 | 41 | 6C | 6C | 20 | NOTICE |
| 128-143 | 72 | 69 | 67 | 68 | 74 | 73 | 20 | 72 | 65 | 73 | 65 | 72 | 76 | 65 | 64 | 20 | |

[ ][1] 01 means SCSI-1 implemented;
02 means SCSI-2/SCSI-3 implemented. Default is 02.

[ ][2] The drive can be changed between these two configurations:
01 means response data in SCSI-1 format and has compatibility with Common Command Set data.
02 means response data in SCSI-2/SCSI-3 format (default is 02).

[ ][3] For “N” models this value is 1E.
For “W,” “WD,” and “WC” models this value is 3E.

R# Four ASCII digits representing the last four digits of the product Firmware Release number. This information is also given in the Vital Product Data page C0h, together with servo RAM and ROM release numbers.

S# Eight ASCII digits representing the eight digits of the product serial number.

[ ][4] Bytes 18 through 24 reflect model of drive. Shown here are hex values for Model ST39173N. Values for ST34573N are 33 34 35 37 33 4E 20.

The hex values for bytes 23 and 24 for the various models are listed below.

| N | W | WD | WC | LW | LC |
|---|---|---|---|---|---|
| 4E 20 | 57 20 | 57 44 | 57 43 | 4C 57 | 4C 43 |

[ ][5] Copyright Year - changes with actual year.

[ ][6] For “N” models, this value is 00.

For models “W,” “WD,” “WC,” “LW,” and “LC,” this value is 01.

### 9.3.1 Inquiry Vital Product data

Instead of the standard Inquiry data shown in Table 8, the initiator can request several Vital Product Data pages by setting the Inquiry command EVPD bit to one. The *SCSI Interface Product Manual,* part number 77738479, Section 5.1.1.3.1 lists the Vital Product Data pages and describes their formats. A separate Inquiry command must be sent to the drive for each Vital Product Data page the initiator wants the drive to send back.

### 9.3.2 Mode Sense data

The Mode Sense command provides a means for the drive to report its operating parameters to the initiator. The drive maintains four sets of Mode parameters, Default values, Saved values, Current values and Changeable values.

Default values are hard coded in the drive firmware that is stored in flash EPROM nonvolatile memory on the drive PCB. Default values can be changed only by downloading a complete set of new firmware into the flash EPROM. An initiator can request and receive from the drive a list of Default values and use those in a Mode Select command to set up new Current and Saved values, where the values are changeable.

Saved values are stored on the disk media using a Mode Select command. Only parameter values that are allowed to be changed can be changed by this method. See “Changeable values” defined below. Parameters in the Saved values list that are not changeable by the Mode Select command get their values from the Default values storage.

Current values are volatile values currently being used by the drive to control its operation. A Mode Select command can be used to change these values (only those that are changeable). Originally, they are installed from Saved or Default values after a power on reset, hard reset, or Bus Device Reset message.

Changeable values form a bit mask, stored in nonvolatile memory, that dictates which of the Current values and Saved values can be changed by a Mode Select command. A “one” allows a change to a corresponding bit; a “zero” allows no change. For example, in Tables 9a and 9b refer to Mode page 01, in the row entitled “CHG”. These are hex numbers representing the changeable values for Mode page 01. Note that bytes 04, 05, 06, and 07 are not changeable, because those fields are all zeros. If some changeable code had a hex value EF, that equates to the binary pattern 1110 1111. If there is a zero in any bit position in the field, it means that bit is not changeable. Bits 7, 6, 5, 3, 2, 1, and 0 are changeable, because those bits are all ones. Bit 4 is not changeable.

Though the drive always reports non-zero values in bytes 00 and 01, those particular bytes are never changeable.

The Changeable values list can only be changed by downloading new firmware into the flash EPROM.

On standard OEM drives the Saved values are taken from the Default values list and stored into the Saved values storage location on the media prior to shipping.

When a drive is powered up, it takes Saved values from the media and stores them to the Current values storage in volatile memory. It is not possible to change the Current values (or the saved values) with a Mode Select command before the drive is up to speed and is “ready.” An attempt to do so results in a “Check Condition” status being returned.

**Note.** Because there may be several different versions of drive control firmware in the total population of drives in the field, the Mode Sense values given in the following tables may not exactly match those of some drives.

The following tables list the values of the data bytes returned by the drive in response to the Mode Sense command pages for SCSI-2/SCSI-3 implementation (see the *SCSI Interface Product Manual*, P/N 77738479).

**Definitions:** SAV = Saved value
DEF = Default value. Standard drives are shipped configured this way.
CHG = Changeable bits; indicates if current and saved values are changeable.

**Table 9a: Mode sense data, ST39173 values (SCSI-2/3 implementation)**

| Bytes | 00 | 01 | 02 | 03 | 04 | 05 | 06 | 07 | 08 | 09 | 10 | 11 | 12 | 13 | 14 | 15 | 16 | 17 | 18 | 19 | 20 | 21 | 22 | 23 |
|---|---|---|---|---|---|---|---|---|---|---|---|---|---|---|---|---|---|---|---|---|---|---|---|---|
| Mode Sense Data | 9F | 00 | 10 | 08 | 01 | 0F | 59 | C8 | 00 | 00 | 02 | 00 | | | | | | | | | | | | |
| Mode Page | <----------Mode Page Headers and Parameter Data Bytes----------> | | | | | | | | | | | | | | | | | | | | | | | |
| 01 SAV | 81 | 0A | C0 | 0C | E8 | 00 | 00 | 00 | 05 | 00 | FF | FF | | | | | | | | | | | | |
| 01 DEF | 81 | 0A | C0 | 0C | E8 | 00 | 00 | 00 | 05 | 00 | FF | FF | | | | | | | | | | | | |
| 01 CHG | 81 | 0A | FF | FF | 00 | 00 | 00 | 00 | FF | 00 | FF | FF | | | | | | | | | | | | |
| 02 SAV | 82 | 0E | 80 | 80 | 00 | 0A | 00 | 00 | 00 | 00 | 00 | 00 | 00 | 00 | 00 | 00 | | | | | | | | |
| 02 DEF | 82 | 0E | 80 | 80 | 00 | 0A | 00 | 00 | 00 | 00 | 00 | 00 | 00 | 00 | 00 | 00 | | | | | | | | |
| 02 CHG | 82 | 0E | FF | FF | 00 | 00 | 00 | 00 | 00 | 00 | 00 | 00 | 87 | 00 | 00 | 00 | | | | | | | | |
| 03 SAV | 83 | 16 | 1A | 40 | 00 | 00 | 00 | 11 | 00 | 00 | 00 | ED | 02 | 00 | 00 | 01 | 00 | 24 | 00 | 34 | 40 | 00 | 00 | 00 |
| 03 DEF | 83 | 16 | 1A | 40 | 00 | 00 | 00 | 11 | 00 | 00 | 00 | ED | 02 | 00 | 00 | 01 | 00 | 24 | 00 | 34 | 40 | 00 | 00 | 00 |
| 03 CHG | 83 | 16 | 00 | 00 | 00 | 00 | 00 | 00 | 00 | 00 | 00 | 00 | 00 | 00 | 00 | 00 | 00 | 00 | 00 | 00 | 00 | 00 | 00 | 00 |
| 04 SAV | 84 | 16 | 00 | 1D | 4D | 0A | 00 | 00 | 00 | 00 | 00 | 00 | 00 | 00 | 00 | 00 | 00 | 00 | 00 | 00 | 1C | 09 | 00 | 00 |
| 04 DEF | 84 | 16 | 00 | 1D | 4D | 0A | 00 | 00 | 00 | 00 | 00 | 00 | 00 | 00 | 00 | 00 | 00 | 00 | 00 | 00 | 1C | 09 | 00 | 00 |
| 04 CHG | 84 | 16 | 00 | 00 | 00 | 00 | 00 | 00 | 00 | 00 | 00 | 00 | 00 | 00 | 00 | 00 | 00 | 00 | 00 | 00 | 00 | 00 | 00 | 00 |
| 07 SAV | 87 | 0A | 00 | 0B | E8 | 00 | 00 | 00 | 00 | 00 | FF | FF | | | | | | | | | | | | |
| 07 DEF | 87 | 0A | 00 | 0B | E8 | 00 | 00 | 00 | 00 | 00 | FF | FF | | | | | | | | | | | | |
| 07 CHG | 87 | 0A | 0F | FF | 00 | 00 | 00 | 00 | 00 | 00 | FF | FF | | | | | | | | | | | | |
| 08 SAV | 88 | 12 | 14 | 00 | FF | FF | 00 | 00 | FF | FF | FF | FF | 80 | 03 | 00 | 00 | 00 | 00 | 00 | 00 | | | | |
| 08 DEF | 88 | 12 | 14 | 00 | FF | FF | 00 | 00 | FF | FF | FF | FF | 80 | 03 | 00 | 00 | 00 | 00 | 00 | 00 | | | | |
| 08 CHG | 88 | 12 | B5 | 00 | 00 | 00 | FF | FF | FF | FF | 00 | 00 | A0[1] | FF | 00 | 00 | 00 | 00 | 00 | 00 | | | | |
| 0A SAV | 8A | 0A | 02 | 00 | 00 | 00 | 00 | 00 | 00 | 00 | 00 | 00 | | | | | | | | | | | | |
| 0A DEF | 8A | 0A | 02 | 00 | 00 | 00 | 00 | 00 | 00 | 00 | 00 | 00 | | | | | | | | | | | | |
| 0A CHG | 8A | 0A | 03 | F1 | 00 | 00 | 00 | 00 | 00 | 00 | 00 | 00 | | | | | | | | | | | | |
| 1A SAV | 9A | 0A | 02 | 00 | 00 | 00 | 00 | 01 | 00 | 00 | 00 | 04 | | | | | | | | | | | | |
| 1A DEF | 9A | 0A | 02 | 00 | 00 | 00 | 00 | 01 | 00 | 00 | 00 | 04 | | | | | | | | | | | | |
| 1A CHG | 9A | 0A | 00 | 03 | 00 | 00 | 00 | 00 | 00 | 00 | 00 | 00 | | | | | | | | | | | | |
| 1C SAV | 9C | 0A | 00 | 00 | 00 | 00 | 00 | 00 | 00 | 00 | 00 | 01 | | | | | | | | | | | | |
| 1C DEF | 9C | 0A | 00 | 00 | 00 | 00 | 00 | 00 | 00 | 00 | 00 | 01 | | | | | | | | | | | | |
| 1C CHG | 9C | 0A | 8D | 0F | 00 | 00 | 00 | 00 | 00 | 00 | 00 | 00 | | | | | | | | | | | | |
| 00 SAV | 80 | 02 | 00 | 00 | | | | | | | | | | | | | | | | | | | | |
| 00 DEF | 80 | 02 | 00 | 00 | | | | | | | | | | | | | | | | | | | | |
| 00 CHG | 80 | 02 | 77 | 40 | | | | | | | | | | | | | | | | | | | | |

[1] Though byte 12, bit 7 (A0) is shown as changeable, the FSW function governed by that bit is not implemented by this drive.

**Table 9b: Mode sense data, ST34573 values (SCSI-2/3 implementation)**

| Bytes | 00 | 01 | 02 | 03 | 04 | 05 | 06 | 07 | 08 | 09 | 10 | 11 | 12 | 13 | 14 | 15 | 16 | 17 | 18 | 19 | 20 | 21 | 22 | 23 |
|---|---|---|---|---|---|---|---|---|---|---|---|---|---|---|---|---|---|---|---|---|---|---|---|---|
| Mode Sense Data | 9F | 00 | 10 | 08 | 00 | 87 | A2 | 5C | 00 | 00 | 02 | 00 | | | | | | | | | | | | |
| Mode Page | <----------Mode Page Headers and Parameter Data Bytes----------> | | | | | | | | | | | | | | | | | | | | | | | |
| 01 SAV | 81 | 0A | C0 | 0C | E8 | 00 | 00 | 00 | 05 | 00 | FF | FF | | | | | | | | | | | | |
| 01 DEF | 81 | 0A | C0 | 0C | E8 | 00 | 00 | 00 | 05 | 00 | FF | FF | | | | | | | | | | | | |
| 01 CHG | 81 | 0A | FF | FF | 00 | 00 | 00 | 00 | FF | 00 | FF | FF | | | | | | | | | | | | |
| | | | | | | | | | | | | | | | | | | | | | | | | |
| 02 SAV | 82 | 0E | 80 | 80 | 00 | 0A | 00 | 00 | 00 | 00 | 00 | 00 | 00 | 00 | 00 | 00 | | | | | | | | |
| 02 DEF | 82 | 0E | 80 | 80 | 00 | 0A | 00 | 00 | 00 | 00 | 00 | 00 | 00 | 00 | 00 | 00 | | | | | | | | |
| 02 CHG | 82 | 0E | FF | FF | 00 | 00 | 00 | 00 | 00 | 00 | 00 | 00 | 87 | 00 | 00 | 00 | | | | | | | | |
| | | | | | | | | | | | | | | | | | | | | | | | | |
| 03 SAV | 83 | 16 | 1A | 40 | 00 | 00 | 00 | 11 | 00 | 00 | 00 | ED | 02 | 00 | 00 | 01 | 00 | 24 | 00 | 34 | 40 | 00 | 00 | 00 |
| 03 DEF | 83 | 16 | 1A | 40 | 00 | 00 | 00 | 11 | 00 | 00 | 00 | ED | 02 | 00 | 00 | 01 | 00 | 24 | 00 | 34 | 40 | 00 | 00 | 00 |
| 03 CHG | 83 | 16 | 00 | 00 | 00 | 00 | 00 | 00 | 00 | 00 | 00 | 00 | 00 | 00 | 00 | 00 | 00 | 00 | 00 | 00 | 00 | 00 | 00 | 00 |
| | | | | | | | | | | | | | | | | | | | | | | | | |
| 04 SAV | 84 | 16 | 00 | 1D | 4D | 05 | 00 | 00 | 00 | 00 | 00 | 00 | 00 | 00 | 00 | 00 | 00 | 00 | 00 | 00 | 1C | 09 | 00 | 00 |
| 04 DEF | 84 | 16 | 00 | 1D | 4D | 05 | 00 | 00 | 00 | 00 | 00 | 00 | 00 | 00 | 00 | 00 | 00 | 00 | 00 | 00 | 1C | 09 | 00 | 00 |
| 04 CHG | 84 | 16 | 00 | 00 | 00 | 00 | 00 | 00 | 00 | 00 | 00 | 00 | 00 | 00 | 00 | 00 | 00 | 00 | 00 | 00 | 00 | 00 | 00 | 00 |
| | | | | | | | | | | | | | | | | | | | | | | | | |
| 07 SAV | 87 | 0A | 00 | 0B | E8 | 00 | 00 | 00 | 00 | 00 | FF | FF | | | | | | | | | | | | |
| 07 DEF | 87 | 0A | 00 | 0B | E8 | 00 | 00 | 00 | 00 | 00 | FF | FF | | | | | | | | | | | | |
| 07 CHG | 87 | 0A | 0F | FF | 00 | 00 | 00 | 00 | 00 | 00 | FF | FF | | | | | | | | | | | | |
| | | | | | | | | | | | | | | | | | | | | | | | | |
| 08 SAV | 88 | 12 | 14 | 00 | FF | FF | 00 | 00 | FF | FF | FF | FF | 80 | 03 | 00 | 00 | 00 | 00 | 00 | 00 | | | | |
| 08 DEF | 88 | 12 | 14 | 00 | FF | FF | 00 | 00 | FF | FF | FF | FF | 80 | 03 | 00 | 00 | 00 | 00 | 00 | 00 | | | | |
| 08 CHG | 88 | 12 | B5 | 00 | 00 | 00 | FF | FF | FF | FF | 00 | 00 | A0[1] | FF | 00 | 00 | 00 | 00 | 00 | 00 | | | | |
| | | | | | | | | | | | | | | | | | | | | | | | | |
| 0A SAV | 8A | 0A | 02 | 00 | 00 | 00 | 00 | 00 | 00 | 00 | 00 | 00 | | | | | | | | | | | | |
| 0A DEF | 8A | 0A | 02 | 00 | 00 | 00 | 00 | 00 | 00 | 00 | 00 | 00 | | | | | | | | | | | | |
| 0A CHG | 8A | 0A | 03 | F1 | 00 | 00 | 00 | 00 | 00 | 00 | 00 | 00 | | | | | | | | | | | | |
| | | | | | | | | | | | | | | | | | | | | | | | | |
| 1A SAV | 9A | 0A | 02 | 00 | 00 | 00 | 00 | 01 | 00 | 00 | 00 | 00 | | | | | | | | | | | | |
| 1A DEF | 9A | 0A | 02 | 00 | 00 | 00 | 00 | 01 | 00 | 00 | 00 | 00 | | | | | | | | | | | | |
| 1A CHG | 9A | 0A | 00 | 03 | 00 | 00 | 00 | 00 | 00 | 00 | 00 | 00 | | | | | | | | | | | | |
| | | | | | | | | | | | | | | | | | | | | | | | | |
| 1C SAV | 9C | 0A | 00 | 00 | 00 | 00 | 00 | 00 | 00 | 00 | 00 | 01 | | | | | | | | | | | | |
| 1C DEF | 9C | 0A | 00 | 00 | 00 | 00 | 00 | 00 | 00 | 00 | 00 | 01 | | | | | | | | | | | | |
| 1C CHG | 9C | 0A | 8D | 0F | 00 | 00 | 00 | 00 | 00 | 00 | 00 | 00 | | | | | | | | | | | | |
| | | | | | | | | | | | | | | | | | | | | | | | | |
| 00 SAV | 80 | 02 | 00 | 00 | | | | | | | | | | | | | | | | | | | | |
| 00 DEF | 80 | 02 | 00 | 00 | | | | | | | | | | | | | | | | | | | | |
| 00 CHG | 80 | 02 | 77 | 40 | | | | | | | | | | | | | | | | | | | | |

[1] Though byte 12, bit 7 (A0) is shown as changeable, the FSW function governed by that bit is not implemented by this drive.

## 9.4 SCSI bus conditions and miscellaneous features supported

Asynchronous SCSI bus conditions supported by the drive are listed below. These conditions cause the SCSI device to perform certain actions and can alter the SCSI bus phase sequence. Other miscellaneous operating features supported are also listed here. Refer to the *SCSI Interface Product Manual,* part number 77738479, for details.

**Table 10: SCSI bus conditions and other miscellaneous features**

Condition/feature supported by:

| Barracuda 9LP | Conditions or feature |
|---|---|
| N | Adaptive Caching |
| Y | Adaptive Read Look-ahead |
| Y | Arbitrating System |
| Y | Asynchronous Data Transfer |
| N | Asynchronous Event Notification |
| Y | Attention Condition |
| Y | Capacity Programming |
| Y | Contingent Allegiance Condition |
| Y | Deferred Error Handling |
| Y | Differential Interface Circuits available |
| Y | Disconnect/Reconnect |
| Y | Flag and Link bits in Control Byte supported |
| Y | Format progress indication |
| Y | Immediate status on Format unit command |
| Y | Immediate status on Start/Stop command |
| Y | Immediate status on Synchronize cache |
| Y | Multi-mode drivers/receivers (single-ended/differential) |
| Y | Parameter Rounding |
| Y | Queue tagging (up to 64 Que tags supported) |
| Y | Reporting actual retry count in Extended Sense bytes 15, 16 and 17. |
| Y | Reset Condition |
| Y | Segmented Caching |
| N | Synchronized (locked) Spindle Operation |
| Y | Synchronous Data Transfer |
| N | Zero Latency Read |

| Barracuda 9LP | Status supported |
|---|---|
| Y | Good |
| Y | Check Condition |
| N | Condition Met/Good |
| Y | Busy |
| Y | Intermediate/Good |
| N | Intermediate/Condition Met/Good |
| Y | Reservation Conflict |
| Y | Queue Full |

## 9.5 Synchronous data transfer

### 9.5.1 Synchronous data transfer periods supported

Table 11 and Section 9.5.2 list Synchronous Data transfer periods supported by the drive. The data transfer period to be used by the drive and the initiator is established by an exchange of messages during the Message Phase of operation. See the section “Extended Message” on message protocol in the *SCSI Interface Product Manual,* part number 77738479. Byte 3 of the message format lists a transfer period factor. The factors possible and equivalent transfer periods are listed in Table 11.

**Table 11: Synchronous data transfer periods for drive**

| Transfer period factor | Transfer period (nanoseconds) |
|---|---|
| 00h-09h | Reserved [1] |
| 0Ah | Transfer period equals 25 ns [2] |
| 0Bh | Transfer period equals 30.3 ns [2] |
| 0Ch | Transfer period equals 50 ns [3] |
| 0Dh-18h | Transfer period equals the transfer period factor * 4 [3] |
| 19h-31h | Transfer period equals the transfer period factor * 4 [4] |
| 32h-FFh | Transfer period equals the transfer period factor * 4 [5] |

**Notes.**

[1] Faster timings may be allowed by future SCSI parallel interface standards.
[2] Fast-40 data transfer rates that have a period equal to 25 ns or 30.3 ns.
[3] Fast-20 data transfer rates that have a period of ≤ 96 ns and ≥ 50 ns.
[4] Fast-10 data transfer rates that have a period of ≤ 196 ns and ≥ 100 ns.
[5] Fast-5 data transfer rates that have a period of ≤ 1020 ns and ≥ 200 ns.

### 9.5.2 REQ/ACK offset

The maximum value supported by the Barracuda 9LP family drives for REQ/ACK offset is 15 (0Fh).

## 9.6 Physical interface

Figures 9a, 9b, and 9c show the locations of the drive physical interface components for the various models of the drive. Shown are the locations of the DC power connector, the SCSI interface connector, and the drive select and option select headers.

Details of the physical, electrical and logical characteristics are given in sections following, while the SCSI operational aspects of Seagate drive interfaces are given in the *SCSI Interface Product Manual*, part number 77738479.

This section describes the connectors, cables, signals, terminators and bus timing of the DC and SCSI I/O interface. See Section 9.8 and Section 9.9 for additional terminator information.

### 9.6.1 DC cable and connector

With the exception of the “WC” drives, the drive receives DC power through a 4 pin connector (see Figure 9a for pin assignment) mounted at the rear of the main PCB. Recommended part numbers of the mating connector are listed below, but equivalent parts may be used.

| Type of cable | Connector | Contacts (20-14 AWG) |
|---|---|---|
| 14 AWG | MP 1-480424-0 | AMP 60619-4 (Loose Piece) |
| | | AMP 61117-4 (Strip) |

Model “WC” receives power through the 80 pin I/O connector. See Table 13e.

| Pin | Power |
|---|---|
| 1P | +12V |
| 2P | +12V ret |
| 3P | + 5V ret |
| 4P | + 5V |

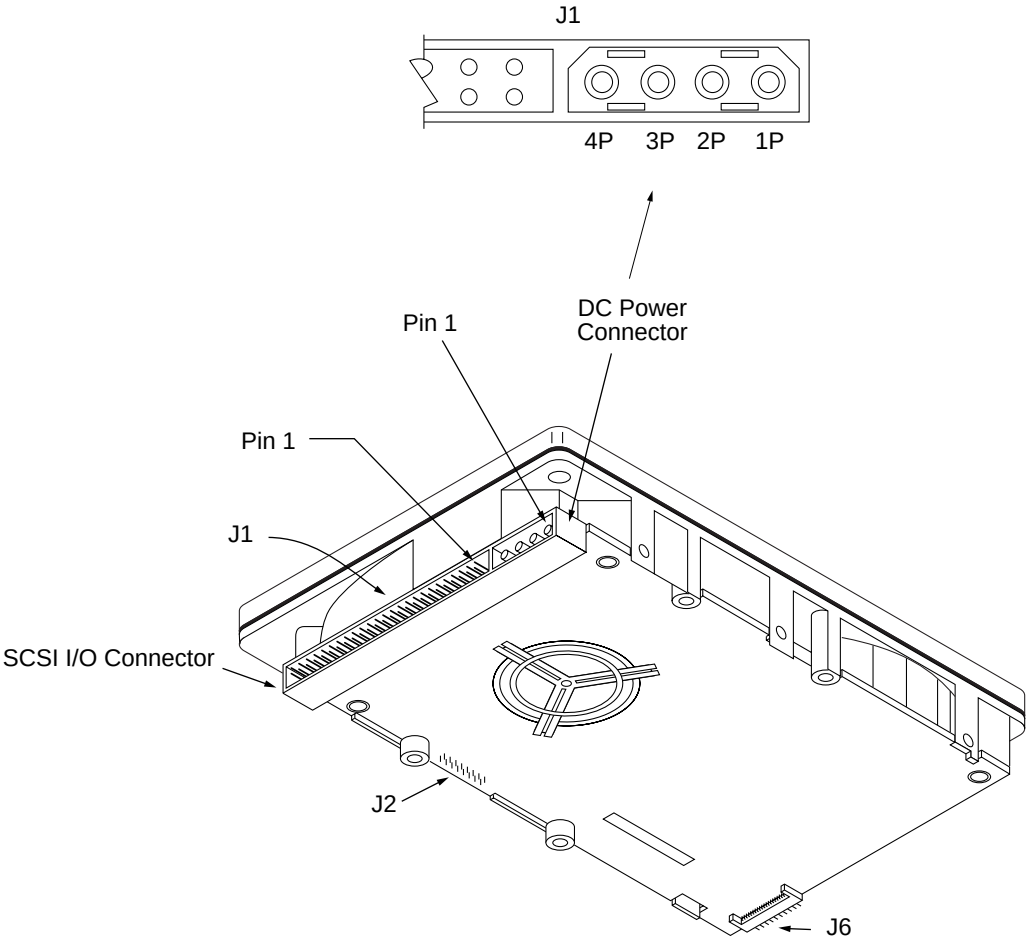


**Figure 9a. Physical interface for "N" model drives**

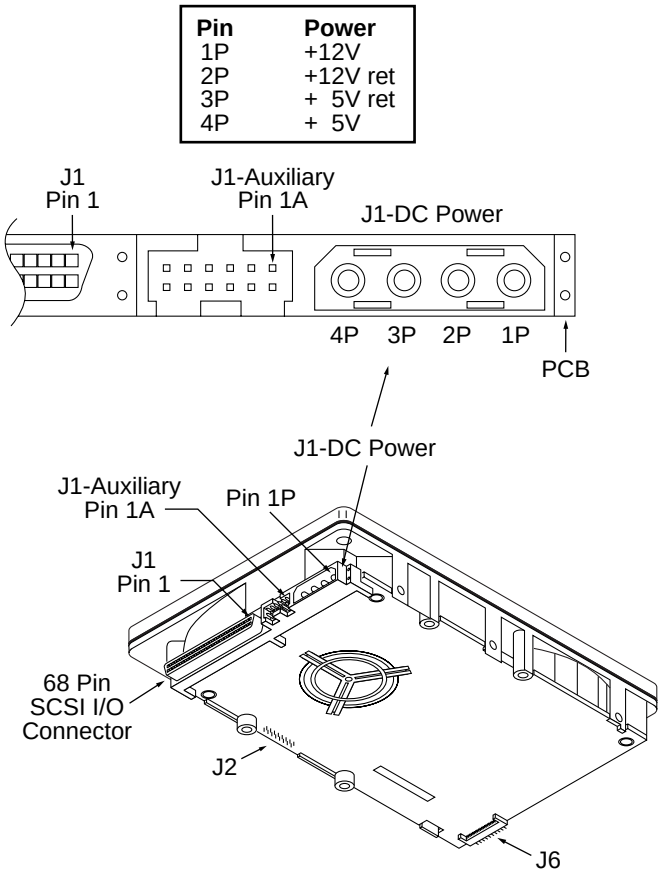


| Pin | Power |
|---|---|
| 1P | +12V |
| 2P | +12V ret |
| 3P | + 5V ret |
| 4P | + 5V |

**Figure 9b. Model "W," "WD," and "LW" drive physical interface (68 pin J1 SCSI I/O connector)**

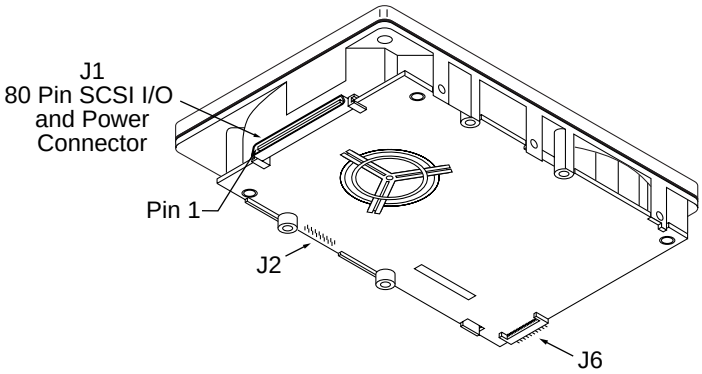


Note: See Table 13e and 13f for DC power pin assignments.

**Figure 9c. Model "WC" and "LC" drive physical interface (80 pin J1 SCSI I/O connector and DC power connector)**

### 9.6.2 SCSI interface physical description

The drive models described by this product manual support the physical interface requirements of the SCSI-3 Parallel Interface-2 (SPI-2) standards as defined in American National Standard document X3T10/1142D, and operate compatibly at the interface with devices that only support earlier SCSI-2 and SCSI-3 standards. It should be noted that this is only true if the systems engineering has been correctly done, and if earlier SCSI-2 and SCSI-3 devices respond in an acceptable manner (per applicable SCSI Standards) to reject newer SCSI-3 protocol extensions that they don't support.

The family of drives in this manual supports the single-ended, high voltage differential and low voltage differential physical interconnects (hereafter referred to as SE, HVD, and LVD, respectively) as described in the ANSI SPI-2 standard. Drive models whose model numbers end with "N," "W," and "WC" implement SE drivers and receivers. Drive models whose model numbers end in "WD" implement HVD drivers and receivers. Drive models whose model numbers end with "LC" and "LW" implement driver and receiver circuits that can operate either SE or LVD (but never HVD).

The drives typically operate on a daisy-chain interface in which other SCSI devices are also operating. Devices on the daisy chain must all operate in the same mode, either SE, LVD, or HVD, but not a mixture of these. On the interface daisy chain, all signals are common between all devices on the chain, or bus, as it is also called. This daisy chain of SCSI devices must be terminated at both ends with the proper impedance in order to operate correctly. Intermediate SCSI devices shall not be terminated. In some cases, the SCSI devices at each end have onboard termination circuits that can be enabled by installation of a jumper plug (**TE**) on the device. These termination circuits receive power from either a source internal to the device, or from a line in the interface cable specifically powered for that purpose. On SE drive models "N" and "W," terminator power source can be selected using the **TP** jumpers on the option select header J2. **TE** is also on the option select header J2 for models "N" and "W." See Section 8.1 for details. Models "WC," "WD," "LC," and "LW" have no onboard termination circuits. Some type of external termination circuits must be provided for these drives by the end user or designers of the equipment into which the drives will be integrated. See Standard X3T10/1142D, sections 6.4 and 6.5 for the maximum number of devices that can successfully operate at various interface transfer rates on SE, HVD, and LVD daisy chains.

"WC" model drives plug into PCB or bulkhead connectors in the Host. They may be connected in a daisy-chain by the host backplane wiring or PCB circuit runs that have adequate DC current carrying capacity to support the number of drives plugged into the PCB or bulkhead connectors. A single 80 pin I/O connector cable cannot support the DC current needs of several drives, so no daisy chain cables beyond the bulkhead connectors should be used. A single drive connected via a cable to a host 80 pin I/O connector is not recommended.

Table 12 shows the interface transfer rates supported by the various drive models defined in this manual.

**Table 12: Interface transfer rates supported**

| Interface type/ drive models | | Maximum transfer rate | | | | |
|---|---|---|---|---|---|---|
| | | **Asynchronous** | **Fast-5** | **Fast-10** | **Fast-20** | **Fast-40** |
| SE | "N," "W," "LC," "LW" | yes | yes | yes | yes | no |
| LVD | "LC," "LW" | yes | yes | yes | yes | yes |
| HVD | "WD" | yes | yes | yes | yes | no |

### 9.6.3 SCSI interface cable requirements

The characteristics of cables used to connect SCSI-3 parallel interface devices are discussed in detail in section 6 of ANSI Standard X3T10/1142D. The cable characteristics that must be considered when interconnecting the drives described in this manual in a SCSI-3 parallel, daisy-chain interconnected system are:

- characteristic impedance (see section 6.1)
- propagation delay (see section 6.1)
- cumulative length (see sections 6.4 and 6.5)
- stub length (see sections 6.4 and 6.5)
- device spacing (see sections 6.4 and 6.5)

To minimize discontinuances and signal reflections, cables of different impedances should not be used in the same bus. Implementations may require trade-offs in shielding effectiveness, cable length, number of loads and spacing, transfer rates, and cost to achieve satisfactory system operation. If shielded and unshielded cables are mixed within the same SCSI bus, the effect of impedance mismatch must be carefully considered. Proper impedance matching is especially important in order to maintain adequate margin at FAST-20 and FAST-40 SCSI transfer rates.

**For “WC” and “LC” models:**

The 80 pin connector option is intended for use on drives that plug directly into a PCB or wall/bracket mounted connector in the host equipment. In such installations, all backplane wiring segments are subject to the electromagnetic concepts presented in Standard X3T10/1142D, section 6. For “WC” and “LC” model drives, installations with connectors on cables are not recommended.

### 9.6.4 Mating connectors

Part numbers for the different type connectors that mate with the various Barracuda 9LP I/O connectors are given in the sections following.

#### 9.6.4.1 Mating connectors for “N” models

The nonshielded cable connector shall be a 50 conductor connector consisting of two rows of 25 female contacts with adjacent contacts 100 mils apart.

Recommended mating flat cable connector part numbers are:

| | | |
|---|---|---|
| Closed end | 3M-3425-7000 | W/O Strain Relief, No Center Key |
| (for cable | 3M-3425-7050 | With Strain Relief, No Center Key |
| ends)[1] | Dupont-66900-290 | With Strain Relief, With Center Key |
| Open end | 3M-3425-6000 | W/O Strain Relief, No Center Key |
| (In daisy-chain)[1] | 3M-3425-6050 | With Strain Relief, No Center Key |
| | Dupont-66900-250 | With Strain Relief, With Center Key |

[1] See Figure 10.

The drive device connector is a nonshielded 50 conductor connector consisting of two rows of 25 male pins with adjacent pins 100 mils apart. The connector is keyed (see Figure 11a).

Mating panel mount connector: 3M-CHE-2050-J01A10-KLE.

#### 9.6.4.2 Mating connectors for “W,” “WD,” and “LW” models

The nonshielded cable connector shall be a 68 conductor connector consisting of two rows of 34 male contacts with adjacent contacts 0.050 inch (1.27 mm) apart.

Recommended mating flat cable connector part numbers are:

| | |
|---|---|
| Amp Model 786096-7 | Female, 68-pin, panel mount |
| Amp Model 786090-7 | Female, 68-pin, cable mount |
| Amp Model 749925-5 | (50 mil conductor centers, 28 or 30 AWG wire)<br>Use two, 34 conductor, 50 mil center flat cable with this connector.<br>This type connector can only be used on cable ends. [1] |
| Amp Model 88-5870-294-5 | W/O Strain Relief (25 mil conductor centers, 30 AWG wire).<br>Use either on cable ends or in cable middle section for daisy-chain installations [1]. |
| Amp Model 1-480420-0 | Power connector 4 circuit housing |
| Berg 69307-012 | 12-position, 2 x 6, 2 mm receptacle housing |

[1] See Figure 10.

The drive device connector is a nonshielded 68 conductor connector consisting of two rows of 34 female pins with adjacent pins 50 mils apart. The connector is keyed by means of its shape (see Figure 11b).

#### 9.6.4.3 Mating connectors for “WC” and “LC” models

The nonshielded connector shall be an 80 conductor connector consisting of two rows of 40 contacts with adjacent contacts 50 (1.27 mm) mils apart (see Figure 11c). I/O connection using a cable is not recommended. The length and size of the host equipment DC power carrying conductors from the DC power source to the host equipment 80 pin disk drive interface connector(s) should be strictly designed according to proper power transmission design concepts. No possibility for the equipment user to attach an 80 pin cable/connector should be allowed, since the length of the DC power carrying conductors could not be controlled and therefore could become too long for safe power transmission to the drive. Daisy-chain 80 conductor cables should especially not be allowed, since the power-carrying conductors on the 80 conductor interface were not intended to support a series of drives.

To insure that both drive connector and host equipment mating connector mate properly, both drive connector and host equipment mating connector must meet the provisions of “SFF-8046 Specification for 80-pin connector for SCSI Disk Drives.”

Recommended mating 80-position PCB mount connectors:

| **Straight-in connector** | | **Hot plug version (with ground guide-pin)** | |
|---|---|---|---|
| Seagate P/N: | 77678703 | | |
| Amp US P/N: | 2-557103-1 | 787311-1 | with polarization |
| or | 94-0680-02-1 | | |
| Amp US P/N: | 2-557103-2 | 787311-2 | without polarization |
| or | 94-0680-02-2 | | |
| Amp Japan P/N: | 5-175475-9 | | |

**Right-angle to PCB connectors**

Seagate P/N: 77678559 Amp US P/N: 2-557101-1 Amp Japan P/N: 5-175474-9

For additional information call Amp. FAX service at 1-800-522-6752.

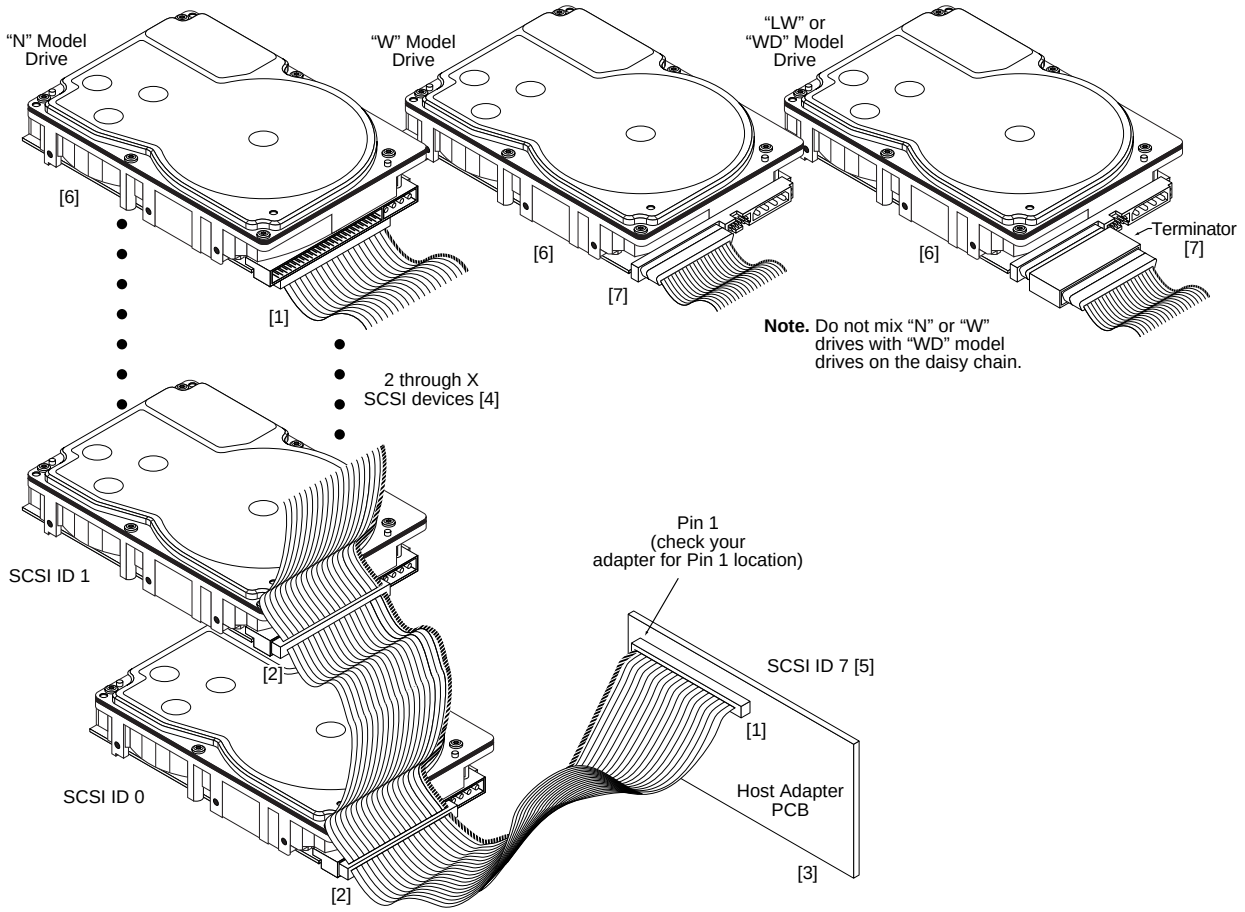


[1] Closed end type 50 pin connector used. Terminators enabled.
[2] Open end type (in-line application) connector used. Terminators disabled.
[3] Host need not be on the end of the daisy-chain. Another device can be on the end with the terminator, the host having no terminator.
[4] Total interface cable length must not exceed that specified in ANSI Standard X3T10/1142D (including host adapter/initiator). The cable length restriction limits the total number of devices allowed.
[5] SCSI ID7 has highest arbitration priority, ID0 has lowest for "N" models. For "W" models, priority is ID7 to ID0, then ID15 to ID8 (ID 8 very lowest).
[6] Last drive on the daisy chain.
[7] Open-end type 68-pin connector used. Terminators disabled on "WD" models. If end "WD" device, external terminator and closed-end type 68-pin connector used. On "W" models, install terminator enable **(TE)** jumper plug. "N" and "W" drives do not require external terminators.

**Figure 10. SCSI daisy chain interface cabling for "N," "W," "WD," and "LW" model drives**

Zaxcom, Inc. Exhibit 2051
RØDE Microphones, LLC, et. al v. Zaxcom, Inc.
Page 68 of 100

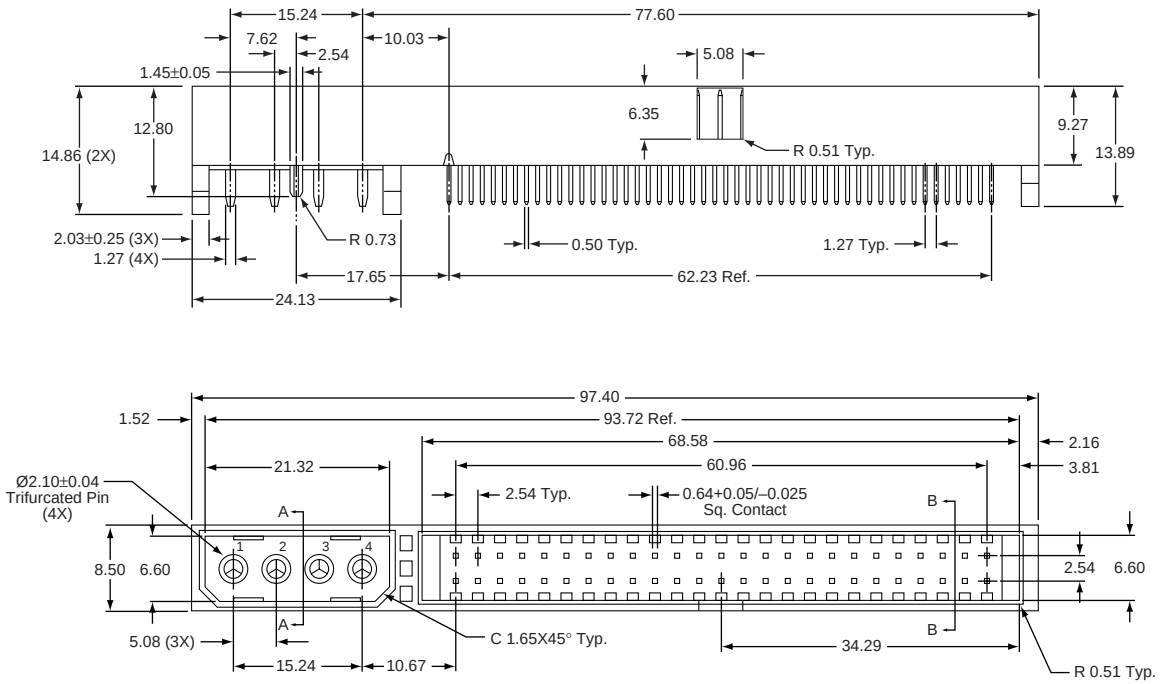


**Figure 11a. Nonshielded 50 pin SCSI device connector used on "N" models**

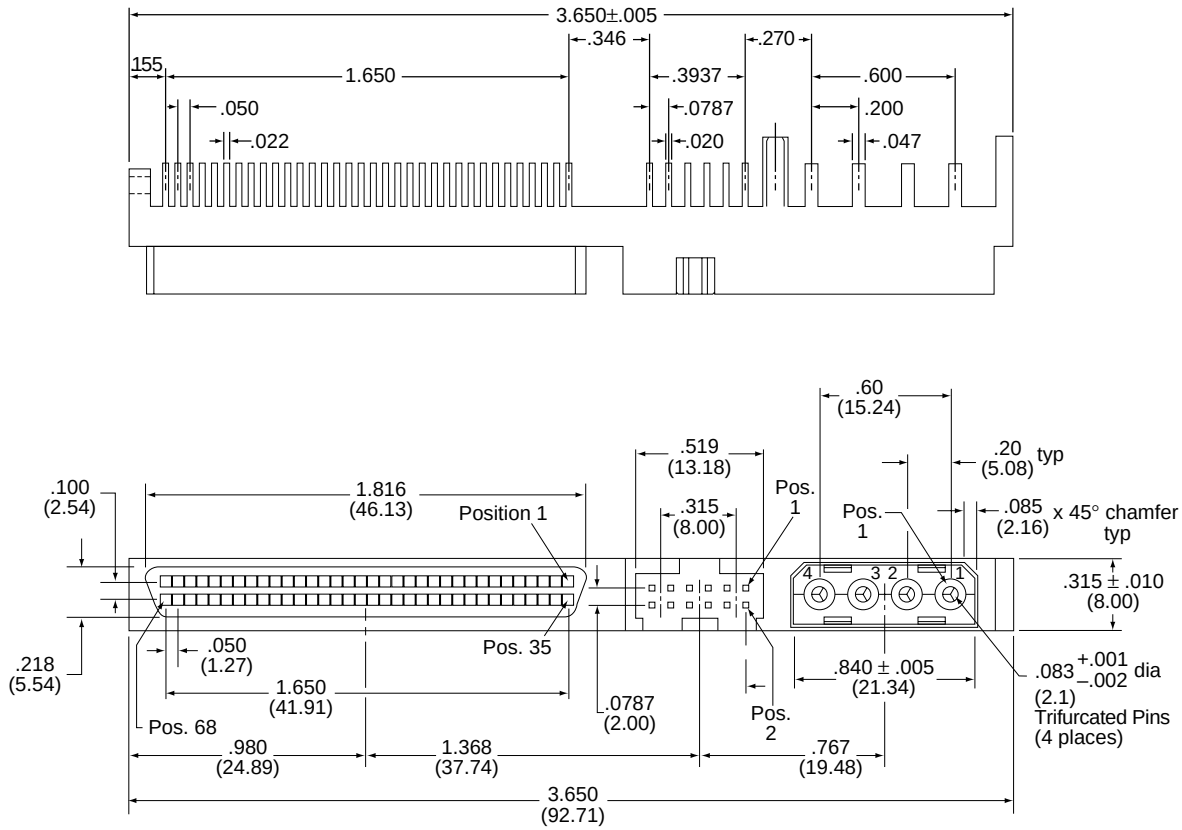


**Figure 11b. Nonshielded 68 pin SCSI device connector used on "W," "WD," and "LW" models**

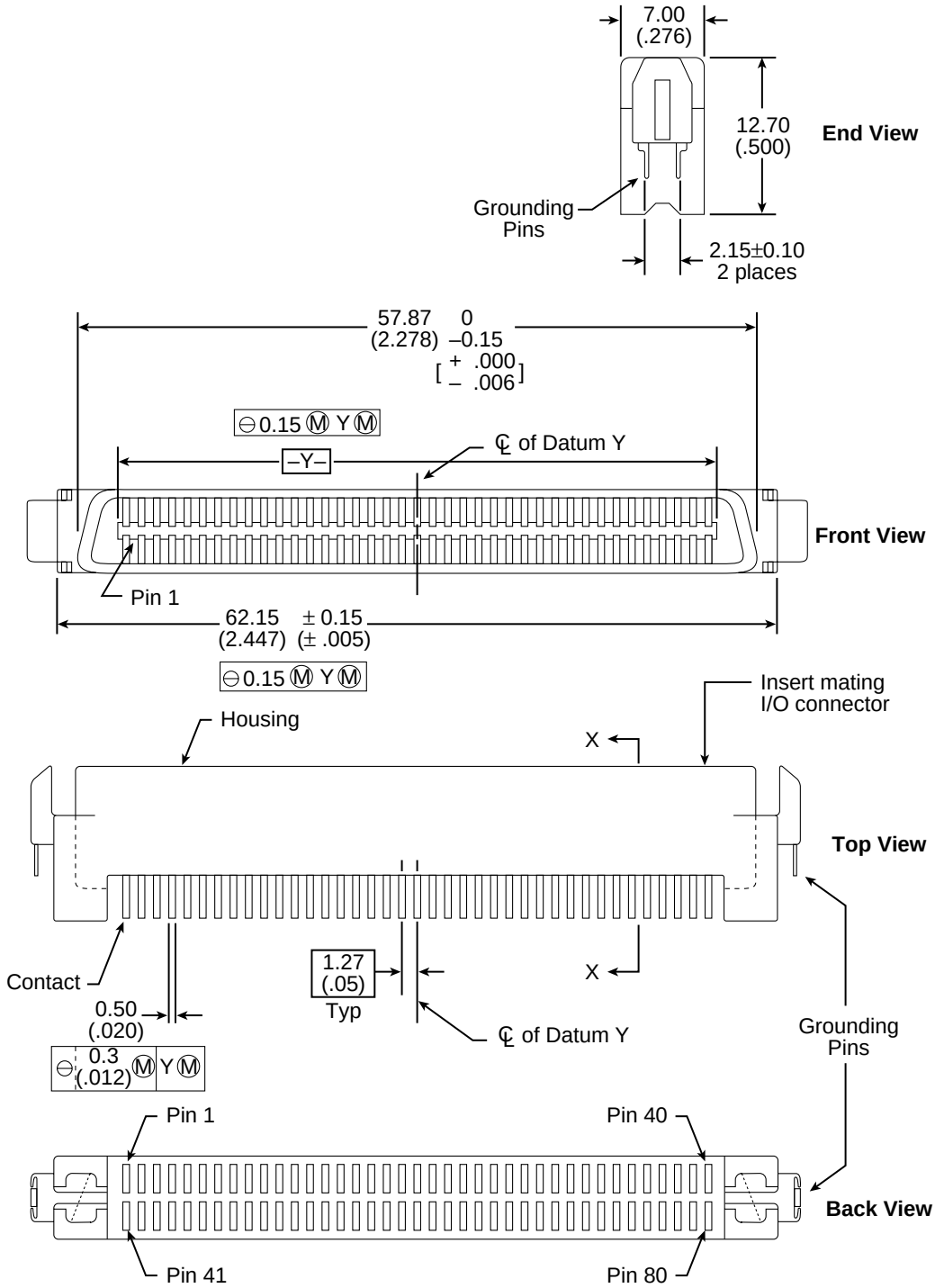


**Figure 11c. Nonshielded 80 pin SCSI "SCA-2" connector, used on "WC" and "LC" models**

**Table 13a: Model "N," single ended I/O, 50 conductor, signal/contact assignments**

| Signal name [1] | Connector contact number [12] | Cable conductor number [11] | | Connector contact number [12] | Signal name [1] |
|---|---|---|---|---|---|
| GND | 1 | 1 | 2 | 2 | –DB0 |
| GND | 3 | 3 | 4 | 4 | –DB1 |
| GND | 5 | 5 | 6 | 6 | –DB2 |
| GND | 7 | 7 | 8 | 8 | –DB3 |
| GND | 9 | 9 | 10 | 10 | –DB4 |
| GND | 11 | 11 | 12 | 12 | –DB5 |
| GND | 13 | 13 | 14 | 14 | –DB6 |
| GND | 15 | 15 | 16 | 16 | –DB7 |
| GND | 17 | 17 | 18 | 18 | –DBP |
| GND | 19 | 19 | 20 | 20 | GND |
| GND | 21 | 21 | 22 | 22 | GND |
| GND | 23 | 23 | 24 | 24 | GND |
| NC [10] | 25* | 25 | 26 | 26 | TERMPWR |
| GND | 27 | 27 | 28 | 28 | GND |
| GND | 29 | 29 | 30 | 30 | GND |
| GND | 31 | 31 | 32 | 32 | –ATN |
| GND | 33 | 33 | 34 | 34 | GND |
| GND | 35 | 35 | 36 | 36 | –BSY |
| GND | 37 | 37 | 38 | 38 | –ACK |
| GND | 39 | 39 | 40 | 40 | –RST |
| GND | 41 | 41 | 42 | 42 | –MSG |
| GND | 43 | 43 | 44 | 44 | –SEL |
| GND | 45 | 45 | 46 | 46 | –C/D |
| GND | 47 | 47 | 48 | 48 | –REQ |
| GND | 49 | 49 | 50 | 50 | –I/O |

***CAUTION:** Connector contact 25 must not be connected to ground at the host end or the drive end of the cable. If the I/O cable should accidently be plugged in upside down, terminator power on pin 26 will be shorted to ground.

**Notes [ ]:** See page following Table 13f.

**Table 13b: "W" models single ended I/O cable 68 conductor signal/contact assignments**

| Signal name [1] | Connector contact number [3] | Cable conductor number [2] | | Connector contact number [3] | Signal name [1] |
|---|---|---|---|---|---|
| GND | 1 | 1 | 2 | 35 | –DB12 |
| GND | 2 | 3 | 4 | 36 | –DB13 |
| GND | 3 | 5 | 6 | 37 | –DB14 |
| GND | 4 | 7 | 8 | 38 | –DB15 |
| GND | 5 | 9 | 10 | 39 | –DBP1 |
| GND | 6 | 11 | 12 | 40 | –DB0 |
| GND | 7 | 13 | 14 | 41 | –DB1 |
| GND | 8 | 15 | 16 | 42 | –DB2 |
| GND | 9 | 17 | 18 | 43 | –DB3 |
| GND | 10 | 19 | 20 | 44 | –DB4 |
| GND | 11 | 21 | 22 | 45 | –DB5 |
| GND | 12 | 23 | 24 | 46 | –DB6 |
| GND | 13 | 25 | 26 | 47 | –DB7 |
| GND | 14 | 27 | 28 | 48 | –DBP |
| GND | 15 | 29 | 30 | 49 | GND |
| GND | 16 | 31 | 32 | 50 | GND |
| TermPwr | 17 | 33 | 34 | 51 | TermPwr |
| TermPwr | 18 | 35 | 36 | 52 | TermPwr |
| Reserved | 19 | 37 | 38 | 53 | Reserved |
| GND | 20 | 39 | 40 | 54 | GND |
| GND | 21 | 41 | 42 | 55 | –ATN |
| GND | 22 | 43 | 44 | 56 | GND |
| GND | 23 | 45 | 46 | 57 | –BSY |
| GND | 24 | 47 | 48 | 58 | –ACK |
| GND | 25 | 49 | 50 | 59 | –RST |
| GND | 26 | 51 | 52 | 60 | –MSG |
| GND | 27 | 53 | 54 | 61 | –SEL |
| GND | 28 | 55 | 56 | 62 | –C/D |
| GND | 29 | 57 | 58 | 63 | –REQ |
| GND | 30 | 59 | 60 | 64 | –I/O |
| GND | 31 | 61 | 62 | 65 | –DB8 |
| GND | 32 | 63 | 64 | 66 | –DB9 |
| GND | 33 | 65 | 66 | 67 | –DB10 |
| GND | 34 | 67 | 68 | 68 | –DB11 |

**Notes [ ]:** See page following Table 13f.

**Table 13c: "WD" models differential cable 68 conductor signal/pin assignments (Nonshielded connector)[13]**

**Note.** The minus sign next to the signal indicates asserted state is the low voltage of the two levels used for logic signals.

| Signal name [1] | Connector contact number [3] | Cable conductor number [2] | | Connector contact number [3] | Signal name [1] |
|---|---|---|---|---|---|
| +DB12 | 1 | 1 | 2 | 35 | –DB12 |
| +DB13 | 2 | 3 | 4 | 36 | –DB13 |
| +DB14 | 3 | 5 | 6 | 37 | –DB14 |
| +DB15 | 4 | 7 | 8 | 38 | –DB15 |
| +DBP1 | 5 | 9 | 10 | 39 | –DBP1 |
| GND | 6 | 11 | 12 | 40 | GND |
| +DB0 | 7 | 13 | 14 | 41 | –DB0 |
| +DB1 | 8 | 15 | 16 | 42 | –DB1 |
| +DB2 | 9 | 17 | 18 | 43 | –DB2 |
| +DB3 | 10 | 19 | 20 | 44 | –DB3 |
| +DB4 | 11 | 21 | 22 | 45 | –DB4 |
| +DB5 | 12 | 23 | 24 | 46 | –DB5 |
| +DB6 | 13 | 25 | 26 | 47 | –DB6 |
| +DB7 | 14 | 27 | 28 | 48 | –DB7 |
| +DBP | 15 | 29 | 30 | 49 | –DBP |
| DIFFSNS [8] | 16 | 31 | 32 | 50 | GND |
| TermPwr | 17 | 33 | 34 | 51 | TermPwr |
| TermPwr | 18 | 35 | 36 | 52 | TermPwr |
| Reserved | 19 | 37 | 38 | 53 | Reserved |
| +ATN | 20 | 39 | 40 | 54 | –ATN |
| GND | 21 | 41 | 42 | 55 | GND |
| +BSY | 22 | 43 | 44 | 56 | –BSY |
| +ACK | 23 | 45 | 46 | 57 | –ACK |
| +RST | 24 | 47 | 48 | 58 | –RST |
| +MSG | 25 | 49 | 50 | 59 | –MSG |
| +SEL | 26 | 51 | 52 | 60 | –SEL |
| +C/D | 27 | 53 | 54 | 61 | –C/D |
| +REQ | 28 | 55 | 56 | 62 | –REQ |
| +I/O | 29 | 57 | 58 | 63 | –I/O |
| GND | 30 | 59 | 60 | 64 | GND |
| +DB8 | 31 | 61 | 62 | 65 | –DB8 |
| +DB9 | 32 | 63 | 64 | 66 | –DB9 |
| +DB10 | 33 | 65 | 66 | 67 | –DB10 |
| +DB11 | 34 | 67 | 68 | 68 | –DB11 |

**Notes [ ]:** See page following Table 13f.

**Table 13d: "LW" models differential cable 68 conductor signal/pin assignments (Nonshielded connector)[13]**

**Note.** The minus sign next to the signal indicates asserted state is the low voltage of the two levels used for logic signals.

| Signal name [1] | Connector contact number [3] | Cable conductor number [2] | | Connector contact number [3] | Signal name [1] |
|---|---|---|---|---|---|
| +DB12 | 1 | 1 | 2 | 35 | –DB12 |
| +DB13 | 2 | 3 | 4 | 36 | –DB13 |
| +DB14 | 3 | 5 | 6 | 37 | –DB14 |
| +DB15 | 4 | 7 | 8 | 38 | –DB15 |
| +DBP1 | 5 | 9 | 10 | 39 | –DBP1 |
| +DB0 | 6 | 11 | 12 | 40 | –DB0 |
| +DB1 | 7 | 13 | 14 | 41 | –DB1 |
| +DB2 | 8 | 15 | 16 | 42 | –DB2 |
| +DB3 | 9 | 17 | 18 | 43 | –DB3 |
| +DB4 | 10 | 19 | 20 | 44 | –DB4 |
| +DB5 | 11 | 21 | 22 | 45 | –DB5 |
| +DB6 | 12 | 23 | 24 | 46 | –DB6 |
| +DB7 | 13 | 25 | 26 | 47 | –DB7 |
| +DBP | 14 | 27 | 28 | 48 | –DBP |
| GND | 15 | 29 | 30 | 49 | GND |
| DIFFSNS [8] | 16 | 31 | 32 | 50 | GND |
| TermPwr | 17 | 33 | 34 | 51 | TermPwr |
| TermPwr | 18 | 35 | 36 | 52 | TermPwr |
| Reserved | 19 | 37 | 38 | 53 | Reserved |
| GND | 20 | 39 | 40 | 54 | GND |
| +ATN | 21 | 41 | 42 | 55 | –ATN |
| GND | 22 | 43 | 44 | 56 | GND |
| +BSY | 23 | 45 | 46 | 57 | –BSY |
| +ACK | 24 | 47 | 48 | 58 | –ACK |
| +RST | 25 | 49 | 50 | 59 | –RST |
| +MSG | 26 | 51 | 52 | 60 | –MSG |
| +SEL | 27 | 53 | 54 | 61 | –SEL |
| +C/D | 28 | 55 | 56 | 62 | –C/D |
| +REQ | 29 | 57 | 58 | 63 | –REQ |
| +I/O | 30 | 59 | 60 | 64 | –I/O |
| +DB8 | 31 | 61 | 62 | 65 | –DB8 |
| +DB9 | 32 | 63 | 64 | 66 | –DB9 |
| +DB10 | 33 | 65 | 66 | 67 | –DB10 |
| +DB11 | 34 | 67 | 68 | 68 | –DB11 |

**Notes [ ]:** See page following Table 13f.

**Table 13e: "WC" models single ended I/O, 80 conductor cable signal/contact assignments**

| Signal name [1] | Connector contact number [3] | Signal number [3] | Contact name[1] |
|---|---|---|---|
| 12 V CHARGE | 1 | 41 | 12 V GND |
| 12 V | 2 | 42 | 12 V GND |
| 12 V | 3 | 43 | 12 V GND |
| 12 V | 4 | 44 | MATED 1 |
| NC [10] | 5 | 45 | NC [10] |
| NC [10] | 6 | 46 | GND [8] |
| –DB11 | 7 | 47 | GND |
| –DB10 | 8 | 48 | GND |
| –DB9 | 9 | 49 | GND |
| –DB8 | 10 | 50 | GND |
| –I/O | 11 | 51 | GND |
| –REQ | 12 | 52 | GND |
| –C/D | 13 | 53 | GND |
| –SEL | 14 | 54 | GND |
| –MSG | 15 | 55 | GND |
| –RST | 16 | 56 | GND |
| –ACK | 17 | 57 | GND |
| –BSY | 18 | 58 | GND |
| –ATN | 19 | 59 | GND |
| –DBP | 20 | 60 | GND |
| –DB7 | 21 | 61 | GND |
| –DB6 | 22 | 62 | GND |
| –DB5 | 23 | 63 | GND |
| –DB4 | 24 | 64 | GND |
| –DB3 | 25 | 65 | GND |
| –DB2 | 26 | 66 | GND |
| –DB1 | 27 | 67 | GND |
| –DB0 | 28 | 68 | GND |
| –DP1 | 29 | 69 | GND |
| –DB15 | 30 | 70 | GND |
| –DB14 | 31 | 71 | GND |
| –DB13 | 32 | 72 | GND |
| –DB12 | 33 | 73 | GND |
| +5 V | 34 | 74 | MATED 2 |
| +5 V | 35 | 75 | 5 V GND |
| +5 V CHARGE | 36 | 76 | 5 V GND |
| NC [10] | 37 | 77 | ACTIVE LED OUT [4] [9] |
| RMT-START [5] [9] | 38 | 78 | DLYD-START [6] [9] |
| SCSI ID (0) [7] [9] | 39 | 79 | SCSI ID (1) [7] [9] |
| SCSI ID (2) [7] [9] | 40 | 80 | SCSI ID (3) [7] [9] |

**Notes [ ]**: See page following Table 13f.

**Table 13f: "LC" differential models, 80 pin I/O connector pin assignments (nonshielded connector) [13]**

| Signal name [1] | Connector contact number [3] | Signal number [3] | Contact name[1] |
|---|---|---|---|
| 12 V CHARGE | 1 | 41 | 12 V GND |
| 12 V | 2 | 42 | 12 V GND |
| 12 V | 3 | 43 | 12 V GND |
| 12 V | 4 | 44 | MATED 1 |
| NC [10] | 5 | 45 | NC [10] |
| NC [10] | 6 | 46 | DIFFSNS [8] |
| –DB11 | 7 | 47 | +DB11 |
| –DB10 | 8 | 48 | +DB10 |
| –DB9 | 9 | 49 | +DB9 |
| –DB8 | 10 | 50 | +DB8 |
| –I/O | 11 | 51 | +I/O |
| –REQ | 12 | 52 | +REQ |
| –C/D | 13 | 53 | +C/D |
| –SEL | 14 | 54 | +SEL |
| –MSG | 15 | 55 | +MSG |
| –RST | 16 | 56 | +RST |
| –ACK | 17 | 57 | +ACK |
| –BSY | 18 | 58 | +BSY |
| –ATN | 19 | 59 | +ATN |
| –DBP | 20 | 60 | +DBP |
| –DB7 | 21 | 61 | +DB7 |
| –DB6 | 22 | 62 | +DB6 |
| –DB5 | 23 | 63 | +DB5 |
| –DB4 | 24 | 64 | +DB4 |
| –DB3 | 25 | 65 | +DB3 |
| –DB2 | 26 | 66 | +DB2 |
| –DB1 | 27 | 67 | +DB1 |
| –DB0 | 28 | 68 | +DB0 |
| –DP1 | 29 | 69 | +DP1 |
| –DB15 | 30 | 70 | +DB15 |
| –DB14 | 31 | 71 | +DB14 |
| –DB13 | 32 | 72 | +DB13 |
| –DB12 | 33 | 73 | +DB12 |
| +5 V | 34 | 74 | MATED 2 |
| +5 V | 35 | 75 | 5 V GND |
| +5 V | 36 | 76 | 5 V GND |
| NC [10] | 37 | 77 | ACTIVE LED OUT [4] [9] |
| RMT-START [5] [9] | 38 | 78 | DLYD-START [6] [9] |
| SCSI ID (0) [7] [9] | 39 | 79 | SCSI ID (1) [7] [9] |
| SCSI ID (2) [7] [9] | 40 | 80 | SCSI ID (3) [7] [9] |

**Notes [ ]**: See page following this Table.

**Notes [ ] for Tables 13a through 13f.**

[1] See Section 9.7.1 or 9.6.4.2 for detailed electrical characteristics of these signals.
[2] The conductor number refers to the conductor position when using 0.025-inch (0.635 mm) centerline flat ribbon cable. Other cables types may be used to implement equivalent contact assignments.
[3] Connector contacts are on 0.050 inch (1.27 mm) centers.
[4] Front panel LED signal; indicates drive activity for host front panel hard drive activity indicator.
[5] Asserted by host to enable Motor Start option (enables starting motor via SCSI bus command).
[6] Asserted by host to enable Delayed Motor Start option (motor starts at power on or after a delay of 12 seconds times drive ID). This and [3] above are mutually exclusive options.
[7] Binary code on A3, A2, A1 and A0 asserted by host to set up SCSI bus ID in drive.
[8] GND provides a means for differential devices to detect the presence of a single ended device on the bus. Drive will not operate I/O bus at ULTRA-2 data rates if this is grounded.
[9] Signals [4] through [7] are used in place of installing jumpers and cables on option select connectors J2 and J6. See Section 8.1.1 notes.
[10] “NC” means no connection.
[11] The conductor number refers to the conductor position (right to left in Figure 10) when using 0.050 inch (1.27 mm) centerline flat ribbon cable. Other cable types may be used to implement equivalent contact assignments.
[12] Connector contacts are on 0.100 inch (2.54 mm) centers.
[13] 8 bit devices which are connected to the 16 data bit differential I/O shall leave the following signals open:
–DB12 –DB13 –DB14 –DB15 –DBP1 –DB8 –DB9 –DB10 –DB11,
+DB12 +DB13 +DB14 +DB15 +DBP1 +DB8 +DB9 +DB10 +DB11.
8 bit devices which are connected to the 16 data bit single-ended I/O shall have the following signals connected as shown:
to ground: +DB12 +DB13 +DB14 +DB15 +DBP1 +DB8 +DB9 +DB10 +DB11,
open circuit: –DB12 –DB13 –DB14 –DB15 –DBP1 –DB8 –DB9 –DB10 –DB11.
All other signals should be connected as shown.

## 9.7 Electrical description

“N” and “W” models use single-ended interface signals. These signals must be terminated with 110-ohm active termination circuits at each end of the total cable. Single-ended circuits use open collector or three state drivers. These models can be configured to provide the SCSI termination.

The “WD” model uses high-voltage (HVD) differential interface signals and each of these must be terminated at each end of the total cable with 330 ohms to +5V and 330 ohms to ground with 150 ohms between each differential pair. All I/O circuits are open collector, three state drivers. These HVD I/O drives are shipped without terminators. These drives have no provisions for adding terminator sockets on the PCB. This means some method of external termination must be provided by the user when termination is required.

“WC” and “LC” models use the single connection attachment (SCA) connector. This 80-pin connector is designed to plug directly into a back panel or plane. No external cables are required. Active terminators on the back panel must be provided by the user. This connector is not recommended where cabling is required.

“LC” and “LW” models are Multimode drives. That is, their I/O circuits can operate as either single-ended or low voltage differential drivers/receivers (selectable using the I/O “DIFFSENS” line). They require external terminators. See Section 9.7.2.2 for additional information on these models.

**Note.** The SCSI protocol chip drives the upper eight data and parity bits of the SCSI bus even when operating in narrow (eight bit) mode. This is normal operation for this chip. If the unused data bit signals are connected to conductors that extend out beyond this drive’s SCSI connector, correct termination must be provided for these unused signals at the device/system at each end of the bus onto which this drive is connected. Termination is required to control radiated emissions and conducted noise on other SCSI bus signals.

See ANSI Standard X3T10/1142D for detailed electrical specifications.

### 9.7.1 Single-ended drivers/receivers

For “N,” “W,” and “WC” models which use single-ended drivers and receivers, typical circuits are shown in Figure 12. Terminator circuits (Note [1]) are to be enabled only when the disc drive is first or last in the daisy-chain.

#### Transmitter characteristics

Single-ended drives use an ANSI SCSI compatible open collector single-ended driver. This driver is capable of sinking a current of 48 mA with a low level output voltage of 0.4 volt.

#### Receiver characteristics

Single-ended drives use an ANSI SCSI single-ended receiver with hysteresis gate or equivalent as a line receiver.

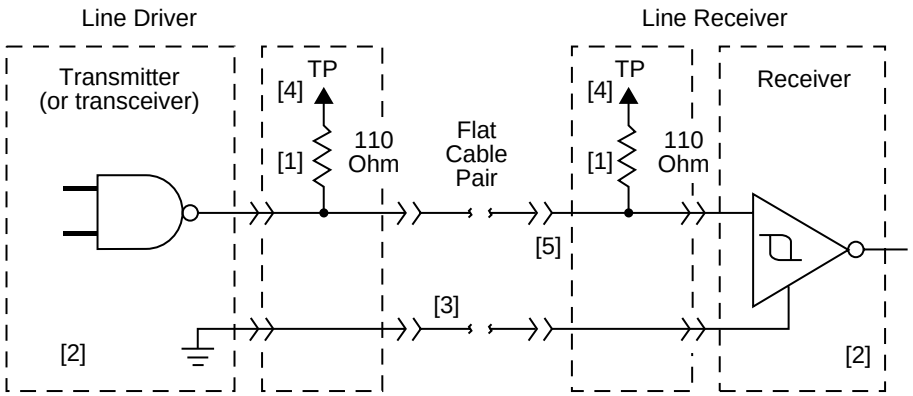


**Figure 12. Single-ended transmitters and receivers**

#### Notes.

[1] Part of active terminator circuits. Non-removable LSI terminators, enabled in the drive (models “N” and “W” only) with jumper plug **TE** when it is first of last in the daisy-chain.

[2] ANSI SCSI compatible circuits.
[3] Total interface cable length should not exceed that specified in ANSI Standard X3T10/1142D.
[4] Source of drive terminator power is an active circuit which has an input source voltage selected by jumper plug **TP**. See Figure 7d. Applies to “N” and “W” models.
[5] Interface signal levels and logical sense at the drive I/O connector for “N,” “W,” and “WC” models are defined as follows:

Vil (low-level input voltage) = 1.0 V maximum (signal true); minimum = Vss – 0.5 V.

Vih (high-level input voltage) = 1.9 V minimum (signal false); maximum = Vdd +0.5V.

Vihys (Input Hysteresis) = 425 mV minimum

### 9.7.2 Differential drivers/receivers

#### 9.7.2.1 High-voltage differential (HVD) alternative

HVD drivers and receivers are used by the “WD” model. Typical circuits are shown in Figures 13 and 14. The drive has no provisions for terminator circuits on differential I/O drives. When the “DIFFSENS” interface line is between 2.4 V and 5.5 V, it selects HVD interface operation.

**HVD signals**

All differential interface signals consist of two lines denoted +SIGNAL and –SIGNAL. A signal is true when +SIGNAL is more positive than –SIGNAL, and a signal is false when –SIGNAL is more positive than +SIGNAL. Drive user or systems integrator must provide some external means of termination.

**Output characteristics**

Each signal driven by differential interface drives shall have the following output characteristics when measured at the disc drive SCSI connector:

Low-level output voltage* = 2.0 V maximum at Low-level output current = 55 milliamps.
High-level output voltage* = 3.0 V minimum at High-level output current = –55 milliamps
Differential voltage = 1.0 V minimum with common-mode voltage ranges from –7 V dc to +12 V dc.

*These voltages shall be measured between the output terminal (either + signal or – signal) and the SCSI device’s logic ground reference.

The output characteristics shall additionally conform to EIA RS-485-1983.

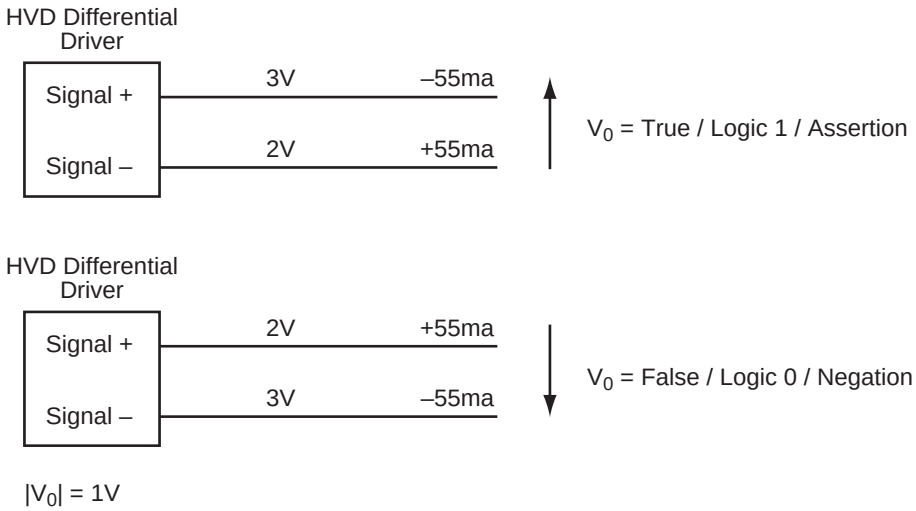


**Figure 13. HVD output signals**

**Input characteristics**

Each signal received by differential interface drives shall have the following input characteristics when measured at the disc drive SCSI connector:

Input current on either input = +2.0 milliamps maximum (includes both receivers and passive drivers).

This requirement shall be met with the input voltage varying between –7 V dc and +12 V dc, with power on or off, and with the hysteresis equaling 35 mv, minimum.

The input characteristics shall additionally conform to EIA RS-485-1983.

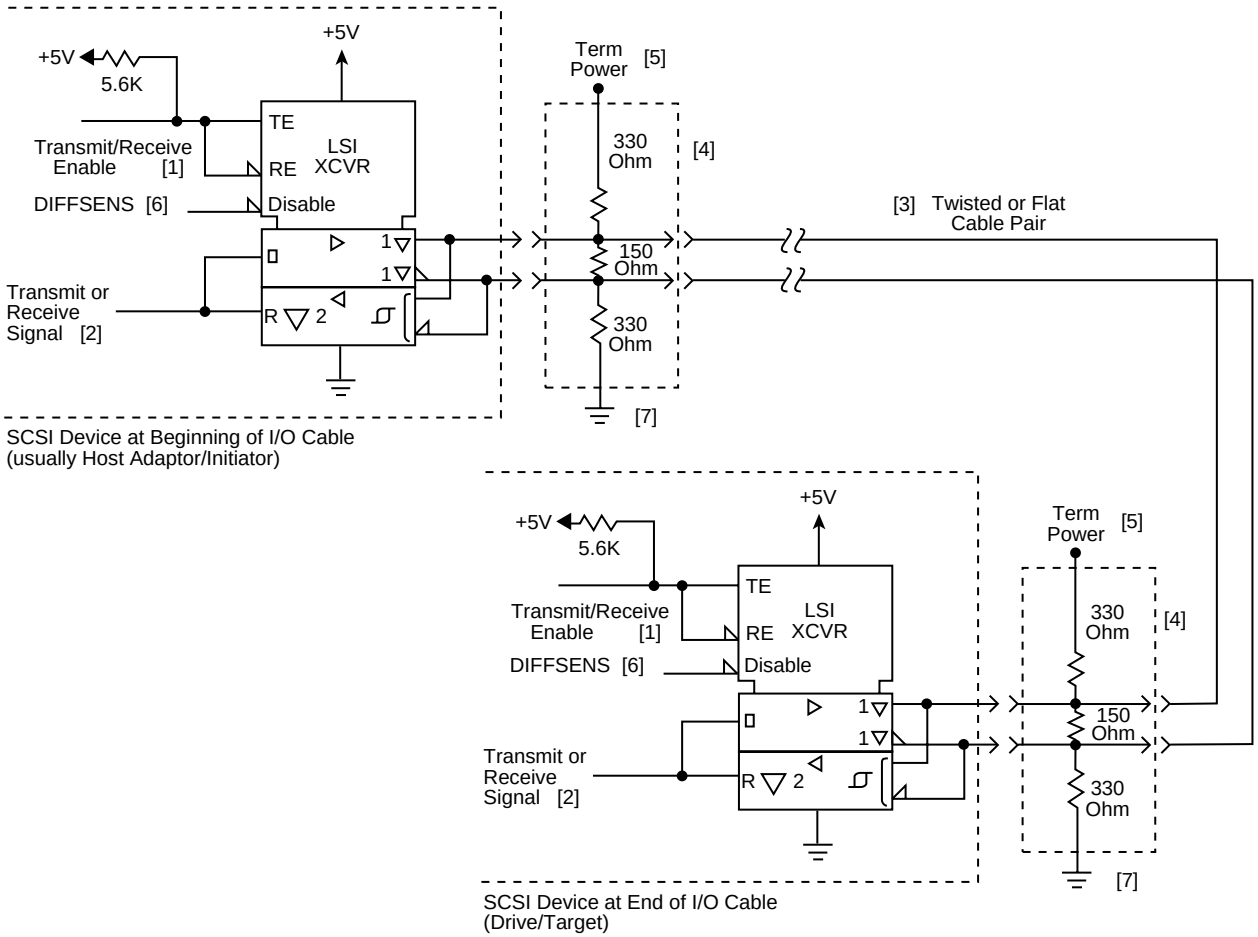


**Notes.**

[1] Positive Logic Enables Transmitter (+5 V = Asserted)
Negative Logic Enables Receivers (0 V = Asserted)

[2] Negative Logic Signal (0 V = Asserted)

[3] Total interface cable length should not exceed value given in Section 9.6.3 from first SCSI device at beginning to end of daisy-chain. See Section 9.7.2 for signal characteristics.

[4] I/O Line terminators. If SCSI device is a Seagate disc drive, terminators and a place to plug them in must be provided external to the drive by user, systems integrator or host equipment manufacturer where needed. The drive has no terminators and there are no provisions on the drive for terminator installation.

[5] Arrangements for connecting terminator power to the terminators must be made by the systems designer. As a help, drive +5 V power is made available on SCSI bus (“N,” “W,” and “WD” models) for powering external terminators if the drive option select header jumper **TP** (Figure 7d) is installed in rightmost position “**TP**.” See pin assignment Tables 13b and 13c for pins assigned to terminator power.

[6] SCSI I/O line (pin 21) disables I/O) circuits if single-ended cable plugged in or cable plugged in upside down. Ground indicates a single-ended device is on the bus. Drive will not operate I/O bus in HVD mode if this line is less than 2.4 V.

[7] SCSI I/O cable ground. See Table 13b.

**Figure 14. Typical high-voltage differential I/O line transmitter/receiver and external terminators**

### 9.7.2.2 Multimode—SE or LVD alternative

"LW" and "LC" models have I/O circuits that can operate either in single-ended (SE) or low voltage differential mode (LVD). When the interface "DIFFSNS" line is between 0 V and .6 V, the drive interface circuits operate single-ended and up to and including 20 M transfers/s (Fast-20 or Ultra-1 SCSI). When "DIFFSENS" is betwen +0.7 V and +1.9 V, the drive interface circuits operate low voltage differential and up to and including 40 M transfers/s or less (Fast-40 or Ultra-2 SCSI). This arrangement is not intended to allow dynamically changing transmission modes, but rather to prevent incompatible devices from attempting to interoperate. Drives must operate only in the mode for which the installation and interface cabling is designed. Multimode I/O circuits used by "LC" and "LW" devices do not operate at high voltage differential levels and should never be exposed to high voltage differential environments unless the common mode voltages in the environment are controlled to safe levels for single-ended and low voltage differential devices (see the ANSI SPI-2 specification X3T10/1142D).

#### Multimode signals

Multimode circuit SE alternative signal characteristics are the same as described in Section 9.7.1. The SE alternative for these circuits is selected as described above. SE cables and termination must be used.

Multimode circuit LVD alternative signal characteristics are not the same as the differential signals described in Section 9.7.2.1. The SCA-2, 80-pin connector signal/pin assignments are the same for HVD and LVD (see Tables 13c and 13e), but the electrical characteristics of the signals are not the same. "LC" and "LW" model drives do not have onboard terminators. The Multimode signal lines (either SE or LVD) should be terminated with 110 ohm active terminator circuits at each end of the total cable. Termination of the I/O lines must be provided for by the Host equipment designers or end users.

The SE and differential alternatives are mutually exclusive.

#### Output characteristics

Each signal ($V_s$) driven by LVD interface drivers shall have the following output characteristics when measured at the disc drive connector:

Steady state Low level output voltage* = –.95 V = < $V_s$ = < –1.55 V (signal negation/logic 0)
Steady state High level output voltage* = –.95 V = < $V_s$ = < 1.55 V (signal assertion/logic 1)
Differential voltage = ±0.6 V minimum with common-mode voltage ranges 0.700 V = < $V_{cm}$ = < 1.800 V.

*These voltages shall be measured between the output terminal and the SCSI device's logic ground reference.

The output characteristics shall additionally conform to EIA RS-485.

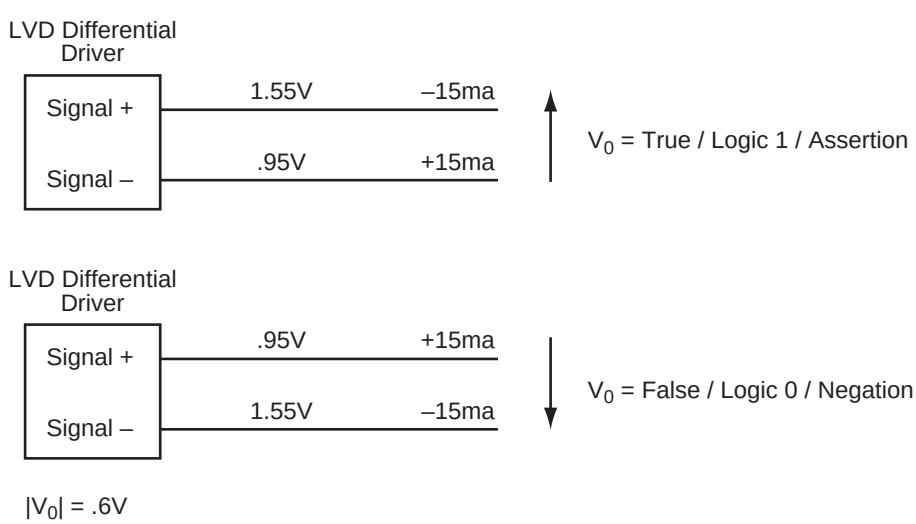


**Figure 15. LVD output signals**

**Input characteristics**

Each signal (Vs) received by LVD interface receiver circuits shall have the following input characteristics when measuared at the disk drive connector:

Steady state Low level output voltage* = 0.030 V = < $V_s$ = < 3.6 V (signal negation/logic 0)
Steady state High level output voltage* = –3.6 V = < $V_s$ = < –0.030 V (signal assertion/logic 1)
Differential voltage = ±0.30 V minimum with common-mode voltage ranges 0.700 V = < $V_{cm}$ = < 1.800 V. (X3T10/1142D revision 13, p. 152)

*These voltages shall be measured between the output terminal and the SCSI device's logic ground reference.

This requirement shall be met with the input voltage varying between 0.700 V and 1.8 V, with power on or off, and with the hysteresis equaling TBD mV, minimum.

Input characteristics shall additionally conform to EIA RS-485-983.

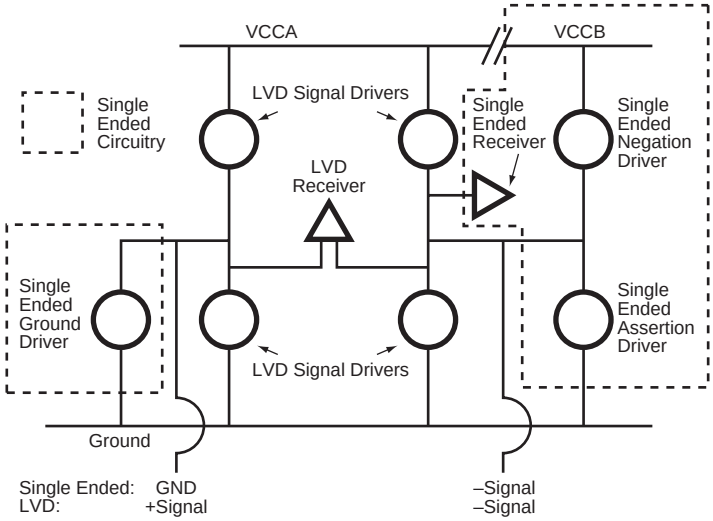


**Figure 16. Typical SE-LVD alternative transmitter receiver circuits**

## 9.8 Terminator requirements

Internal disc drive I/O termination (provided only in model "N" and "W" drives single ended I/O model drives) consists of active circuits in an LSI module that is permanently mounted on the PCB. All single initiator/single target (non-daisy-chain) applications require that the Initiator and disc drive be terminated. Daisy-chain applications require that only the units at each end of the daisy-chain be terminated. All other peripherals on the chain must not be terminated. (See Figure 10).

**Note.** Remove drive terminator enabling jumper **TE** where terminators are not required. Removal of terminator power source selection jumper **TP** (see Figure 7d) does not disconnect the terminator resistors from the circuit.

It is highly recommended that ANSI SCSI-2 Standard's Alternative 2 termination (active termination) be used for applications with single-ended ("N" and "W" models), especially if the bus will be operated at transfer rates above 5 Mbytes/sec. The "N" and "W" models provide on-board active termination that can be disabled by removal of the enable jumper **TE** (see Figure 7d).

**Note.** ACTIVE TERMINATORS ARE HIGHLY RECOMMENDED FOR USE IN THE DAISY-CHAIN AS DESCRIBED ABOVE. ACTIVE AND PASSIVE TERMINATORS SHOULD NOT BE MIXED ON THE SAME SCSI BUS.

Drive models "WD," "WC," "LW," and "LC" do not have internal terminators available. The user, systems integrator or host equipment manufacturer must provide a terminator arrangement external to the drive. For "ND," "WD," and "LW" models, terminator modules can be purchased that plug between the SCSI I/O cable and the drive I/O connector or on the end of a short I/O cable stub extending past the last cable connector.

**Note.** The SCSI protocol chip drives the upper eight data and parity bits of the SCSI bus even when operating in narrow (eight bit) mode. This is normal operation for this chip. If the unused data bit signals are connected to conductors that extend out beyond this drive's SCSI connector, correct termination must be provided for these unused signals at the device/system at each end of the bus onto which this drive is connected. Termination is required to control radiated emissions and conducted noise on other SCSI bus signals.

ANSI Standard X3T10/1143D contains additional details about SCSI bus terminator and terminator power requirements.

## 9.9 Terminator power

### "N" and "W" model drives

You can configure terminator power in four different ways. See Section 8.1 for illustrations that show how to place jumpers enabling each of the following terminator power configurations:

1. Drive accepts terminator power through SCSI bus pins:
   "N" Models Pin 26
   "W" Models Pins 17, 18, 51, and 52
2. Drive supplies power to the SCSI bus.
3. Drive provides terminator power for optional internal terminator resistors using the drive's power connector.
4. Drive provides power to its own terminators and to the SCSI bus terminator power line.

SCSI devices providing terminator power (TERMPWR) must have the following characteristics:

8-bit SCSI V TERM = 4.25 V to 5.25 V
800 mA minimum source drive capability
1.0 A maximum

16-bit SCSI V TERM = 4.25 V to 5.25 V
1,500 mA minimum source drive capability
3.0 A maximum

### "WD" and "LW" model drives

You can configure terminator power from the drive to the SCSI bus or have the host adaptor or other device supply terminator power to the external terminator. See Section 8.1 for illustrations that show how to place jumpers for this configuration.

### "WC" and "LC" model drives

These drives cannot furnish terminator power because no conductors in the 80-pin I/O connector are devoted to terminator power.

## 9.10 Disc drive SCSI timing

**Table 14: Disc drive SCSI timing**

These values are not current Barracuda 9LP values, but are listed for information only.

| Description | Waveform symbol [1] | Waveform table [1] | Typical timing |
|---|---|---|---|
| Target Select Time (no Arbitration) | T00 | N/A | <1.4 µs |
| Target Select Time (with Arbitration) | T01 | 4.5-1,2 | 1.93 µs |
| Target Select to Command | T02 | 4.5-1 | 3.77 µs |
| Target Select to MSG Out | T03 | 4.5-2 | 1.57 µs |
| Identify MSG to Command | T04 | 4.5-3 | 3.36 µs |
| Command to Status | T05 | 4.5-5 | Command Dependent |
| Command to Data (para. In) | T06 | 4.5-9 | Command Dependent |
| Command to Data (para. Out) | T07 | 4.5-10 | Command Dependent |
| Command to Data (Write to Data Buffer) | T08 | 4.5-10 | Command Dependent |
| Command to Disconnect MSG | T09 | 4.5-6 | Command Dependent |
| Disconnect MSG to Bus Free | T10 | 4.5-6,14 | 0.52 µs |
| Disconnect to Arbitration (for Reselect)<br>This measures disconnected CMD overhead | T11 | 4.5-6 | Command Dependent |
| Target win Arbitration (for Reselect) | T12 | 4.5-7 | 3.00 µs |
| Arbitration to Reselect | T13 | 4.5-7 | 1.60 µs |
| Reselect to Identify MSG In | T14 | 4.5-7 | 1.39 µs |
| Reselect Identify MSG to Status | T15 | 4.5-8 | Command Dependent |
| Reselect Identify MSG to Data (media) | T16 | 4.5-11 | Command Dependent |
| Data to Status | T17 | 4.5-15 | Command Dependent |
| Status to Command Complete MSG | T18 | 4.5-5,8,15 | 0.98 µs |
| Command Complete MSG to Bus Free | T19 | 4.5-5,8,15 | 0.51 µs |
| Data to Save Data Pointer MSG | T20 | 4.5-14 | 4.00 µs |
| Save Data Pointer MSG to Disconnect MSG | T21 | 4.5-14 | 0.79 µs |
| Command Byte Transfer | T22 | 4.5-4 | 0.04 µs |
| Next Command Byte Access: | | 4.5-4 | |
| Next CDB Byte Access (Byte 2 of 6) | T23.6.2 | 4.5-4 | 0.58 µs |
| Next CDB Byte Access (Byte 3 of 6) | T23.6.3 | 4.5-4 | 0.12 µs |
| Next CDB Byte Access (Byte 4 of 6) | T23.6.4 | 4.5-4 | 0.12 µs |
| Next CDB Byte Access (Byte 5 of 6) | T23.6.5 | 4.5-4 | 0.12 µs |
| Next CDB Byte Access (Byte 6 of 6) | T23.6.6 | 4.5-4 | 0.12 µs |
| Next CDB Byte Access (Byte 2 of 10) | T23.10.2 | 4.5-4 | 0.59 µs |
| Next CDB Byte Access (Byte 3 of 10) | T23.10.3 | 4.5-4 | 0.11 µs ±1 µs |
| Next CDB Byte Access (Byte 4 of 10) | T23.10.4 | 4.5-4 | 0.12 µs ±1 µs |
| Next CDB Byte Access (Byte 5 of 10) | T23.10.5 | 4.5-4 | 0.11 µs ±1 µs |
| Next CDB Byte Access (Byte 6 of 10) | T23.10.6 | 4.5-4 | 0.11 µs ±1 µs |
| Next CDB Byte Access (Byte 7 of 10) | T23.10.7 | 4.5-4 | 0.13 µs ±1 µs |
| Next CDB Byte Access (Byte 8 of 10) | T23.10.8 | 4.5-4 | 0.12 µs ±1 µs |
| Next CDB Byte Access (Byte 9 of 10) | T23.10.9 | 4.5-4 | 0.12 µs ±1 µs |

**Table 14: Disc drive SCSI timing**

These values are not current Barracuda 9LP values, but are listed for information only.

| Description | Waveform symbol [1] | Waveform table [1] | Typical timing |
|---|---|---|---|
| Next CDB Byte Access (Byte 10 of 10) | T23.10.10 | 4.5-4 | 0.12 µs ±1 µs |
| Data In Byte Transfer (parameter) | T24 | 4.5-12 | 0.04 µs |
| Data Out Byte Transfer (parameter) | T25 | 4.5-13 | 0.04 µs |
| Next Data In Byte Access (parameter) | T26 | 4.5-12 | 0.12 µs |
| Next Data Out Byte Access (parameter) | T27 | 4.5-13 | 0.12 µs |
| Data In Byte Transfer (media) [2] | T28 | 4.5-12 | 0.04 µs |
| Data Out Byte Transfer (media) [2] | T29 | 4.5-13 | 0.04 µs |
| Next Data In Byte access (media [2] | T30 | 4.5-12 | 0.12 µs |
| Next Data Out Byte access (media [2] | T31 | 4.5-13 | 0.12 µs |
| MSG IN Byte Transfer | T32 | 4.5-5,7,8,14,15 | 0.04 µs |
| MSG OUT Byte Transfer | T33 | 4.5-2 | 0.04 µs |
| STATUS Byte Transfer | T34 | 4.5-5,8,15 | 0.04 µs |
| Synchronous Data Transfer Characteristics: | | | |
| Request Signal Transfer Period [3] | – | – | various (800 ns max) |

**Notes.**

[1] See the *SCSI Interface Product Manual,* part number 77738479, Section 4.5

[2] Maximum SCSI asynchronous interface transfer rate is given in Section 4.2.3 of this manual.

[3] Synchronous Transfer Period is determined by negotiations between an Initiator and a Drive. The Drive is capable of setting periods as given in Section 9.5. See also Sections 3.1.5.2 and 3.5.3.2 of the *SCSI Interface Product Manual,* for a description of synchronous data transfer operation.

# 10.0 Seagate Technology support services

## Presales support

To determine which Seagate products are best suited for your specific application, contact us about configuration and compatibility and for current product availability. You can leave a voice message after business hours or send an e-mail message—we reply during business hours.

***Disc Drives 1-877-271-3285 or 405-936-1210 Fax: 405-936-1683***
(8:00 A.M. to 12:15 P.M., 1:30 P.M. to 6:00 P.M., central time, M–F)
e-mail: DiscPresales@Seagate.com

***Tape Products 1-800-626-6637 or 715-641-2500 Fax: 714-641-2410***
(6:00 A.M. to 5:00 P.M., pacific time, M–F)
e-mail: Tape_Sales_Support@Seagate.com

**Note.** You can purchase select tape products and tape accessories through Seagate Express 24 hours daily by calling 1-800-531-0968 or by faxing your order to 972-481-4812.

## Technical support services

If you need assistance installing your drive, consult your dealer. Dealers are familiar with their unique system configurations and can help you with system conflicts and other technical issues. If you need additional assistance with your Seagate® drive or other Seagate products, use one of the Seagate technical support services listed below.

***SeaFONE® 1-800-SEAGATE***
Seagate's 800 number (1-800-732-4283) allows toll-free access to automated self-help services, providing answers to commonly asked questions, troubleshooting tips, and specifications for disc drives and tape drives. This service is available 24 hours daily and requires a touch-tone phone. International callers can reach this automated self-help service by dialing 405-936-1234.

### Online services

Using a modem, you can obtain troubleshooting tips, free utility programs, drive specifications and jumper settings for Seagate's entire product line. You can also download software for installing and analyzing your drive.

***SeaNET***
You can obtain technical information about Seagate products over the Internet from Seagate's World Wide Web home page (http://www.seagate.com) or Seagate's ftp server (ftp://ftp.seagate.com). You can also send e-mail with your questions to DiscSupport@Seagate.com or TapeSupport@Seagate.com.

***SeaBOARD®***
SeaBOARD is a computer bulletin board system that contains information about Seagate disc and tape drive products and is available 24 hours daily. Set your communications software to eight data bits, no parity, and one stop bit (8-N-1).

| Location | Phone number |
|---|---|
| Australia | 61-2-9756-2359 |
| France | 33 1-48 25 35 95 |
| Germany | 49-89-1409331 |
| Taiwan | 886-2-2719-6075 |
| Thailand | 662-531-8111 |
| UK | 44-1628-478011 |
| USA | Disc: 405-936-1600; Tape: 405-936-1630 |

## FAX services

### *SeaFAX®*

You can use a touch-tone telephone to access Seagate's automated FAX system to receive technical support information by return FAX. This service is available 24 hours daily.

| Location | Phone number |
|---|---|
| Australia | 61-2-9756-5170 |
| Germany | 49-89-14305102 |
| UK | 44-1628-894084 |
| USA | 1-800-SEAGATE or Disc: 405-936-1620; Tape: 405-936-1640 |

### *Technical support FAX*

You can FAX questions or comments to technical support specialists 24 hours daily. Responses are sent during business hours.

| Location | Phone number |
|---|---|
| Australia | 61-2-9725-4052 |
| France | 33 1-46 04 42 50 |
| Germany | 49-89-14305100 |
| Hong Kong | 852-2368 7173 |
| Japan | 81-3-5462-2979 |
| Korea | 82-2-556-4251/7395 |
| Singapore | 65-488-7528 |
| Taiwan | 886-2-2715-2923 |
| UK | 44-1628-890660 |
| USA | Disc: 405-936-1685; Tape: 405-936-1683 |

## Direct-support services

### *Technical support*

For one-on-one help, you can talk to a technical support specialist during local business hours. Before calling, note your system configuration and drive model number (ST*xxxx*).

| Location | Phone number |
|---|---|
| Australia | 61-2-9725-3366 (9:00 A.M. to 5:00 P.M., eastern time, M–F) |
| France | 33 1-41 86 10 86 (9:30 A.M. to 12:30 P.M., 2:00 P.M. to 5:00 P.M., M–F) |
| Germany | 49-89-1409332 (9:30 A.M. to 12:30 P.M., 2:00 P.M. to 4:00 P.M., M–F) |
| Hong Kong | 852-2368 9918 (9:00 A.M. to 12:00 P.M., 2:00 P.M. to 5:30 P.M., M–F) |
| Korea | 82-2-531-5800 (9:00 A.M. to 12:00 P.M., 1:00 P.M. to 6:00 P.M., M–F) |
| Singapore | 65-488-7584 (9:00 A.M. to 12:00 P.M., 2:00 P.M. to 5:00 P.M., M–F) |
| Taiwan | 886-2-2514-2237 |
| UK | 44-1628-894083 (10:00 A.M. to 1:00 P.M., 2:00 P.M. to 5:00 P.M., M–F) |
| USA | Please dial 1-800-SEAGATE or 405-936-1234 for the specific product telephone number. (8:00 A.M. to 12:15 P.M., 1:30 P.M. to 6:00 P.M., central time, M–F) |

### *SeaTDD™ 405-936-1687*

Using a telecommunications device for the deaf (TDD), you can send questions or comments 24 hours daily and exchange messages with a technical support specialist from 8:00 A.M. to 12:15 P.M. and 1:30 P.M. to 6:00 P.M. (central time) Monday through Friday.

## Customer service centers

Seagate direct OEM, Distribution, and Systems Integrator customers should contact their Seagate service representative for warranty information. Other customers should contact their place of purchase. Seagate offers comprehensive customer support for all Seagate drives. These services are available worldwide.

| Location | Phone number | FAX number |
|---|---|---|
| Asia Pacific and Australia | 65-485-3595 | 65-488-7503 |
| Middle East and Africa | 31-2031-67222 | 31-2065-34320 |
| Europe | 31-2031-67222 | 31-2065-34320 |

*European toll-free phone numbers are available for you to contact customer service representatives between 8:30 A.M. and 5:00 P.M. (European central time) Monday through Friday. The European call center is located in Amsterdam, The Netherlands.*

| Location | Toll-free phone number |
|---|---|
| Austria | 0 800-20 12 90 |
| Belgium | 0 800-74 876 |
| Denmark | 80 88 12 66 |
| France | 0 800-90 90 52 |
| Germany | 0 800-182 6831 |
| Ireland | 1 800-55 21 22 |
| Italy | 1 677 90 695 |
| Netherlands | 0 800-732 4283 |
| Norway | 800-113 91 |
| Poland | 00 800-311 12 38 |
| Spain | 900-98 31 24 |
| Sweden | 0 207 90 073 |
| Switzerland | 0 800-83 84 11 |
| Turkey | 00 800-31 92 91 40 |
| United Kingdom | 0 800-783 5177 |

| | | |
|---|---|---|
| Japan | 81-3-5462-2904 | 81-3-5462-2979 |
| USA | 1-800-468-3472 | 405-949-6740 |
| Other Americas (Brazil, Canada, Mexico) | 405-949-6706 | 405-949-6738 |

*Manufacturer's representatives*

| | | |
|---|---|---|
| Brazil | | |
| MA Informatica | 55-21-516-6649 | 55-21-516-5280 |
| Canada | | |
| Memofix | 905-660-4936 | 905-660-4951 |
| Adtech | 905-812-8099<br>1-800-624-9857 | 905-812-7807 |
| Mexico | | |
| Abicom Seamax SA DE CV | 525-546-4888 | 525-546-4888 |
| Southern Europe | | |
| Caesar Italia | 39-688-18149 | 39-688-02103 |

# Index

## Symbols

+5 and +12 volt supplies 19
“G” list 31
“P” list 31

## Numerics

19433
Figure x.
Figure 13. ? 69
50 conductor connector 56
50 pin connector 58, 59
68 conductor connector 57
80 conductor connector 57
80 conductor interface 57
80 pin connector option 56
80 pin I/O connector 55, 65, 66

## A

AC power 19
access time 9, 10
accessories 8
acoustics 26
active circuit 72
activity indicator 67
actuator 7, 41
actuator assembly 6
adaptive read look-ahead 12
adaptive servo calibration 20
address 11
air circulation 41
air cleanliness 26
air flow 21, 41
suggested 41
air inlet 41
altitude 24
altitude and atmospheric pressure 21
ambient 22
ambient temperature 21, 41
ANSI SCSI documents 4
ANSI SCSI-2/SCSI-3 SPI-2 5
ANSI SPI-2 (T10/1142D) 15
arbitration priority 58
ARLA 12
asynchronous interface transfer rate 75
audible noise 3, 7
Australia/New Zealand Standard 4
Australia’s Spectrum Management Agency (SMA) 4
automatic retry 13
automatic shipping lock 6
average idle current 19
average latency 7
average rotational latency 9, 10

## B

background processing 7
backward compatibility 5
bits/inch 9
buffer 11, 12
buffer segment 11, 12
buffer-full 11
buffer-full ratio 11
bulkhead connector 55
bus device reset message 48
bytes per sector 46
bytes/surface 9
bytes/track 9

## C

cabinet cooling 41
cable 52
cable length 69
cache 11, 12
cache buffer 7
cache miss 11
cache mode 11
cache operation 11
cache operation hit 12
cache segment 11
caching write data 12
calibration 20
Canadian Department of Communications 3
capacities 8
capacity, drive, programmable 8
case temperature 21, 22
CE Marking 3
change definition command 44
changeable bit 49
changeable value 48
check condition 48
class B limit 3
command 11, 44
command descriptor block (CDB) 10
command queuing 7
condensation 21, 24
conducted noise immunity 19, 20
connect/disconnect 10
connector 52
connector contact 67
connector key 56
consecutive read operation 12
contiguous blocks of data 12
continuous vibration 26
controller 11
controller overhead 9
controller self test 20
cooling 41
cooling air 22
C-Tick Marking 3, 4
current 20, 68

current I/O processes 15
current limiting 20
current profile 20, 21
current requirements 19
current value 48, 49
cylinder boundary 12

## D

daisy-chain 20, 55, 56, 58, 68, 72
    80 conductor 57
data area 20
data correction 13
data transfer period 52
data transfer protocol 7
data transfer rate 9
DC cable and connector 52
DC current 55
DC power 10, 11, 13, 21, 40, 52
DC power carrying conductor 57
DC power connector 52, 53, 54
DC power requirements 19
DC power source 57
dedicated landing zone 6
default 39, 40
default mode parameter 33
default value 48, 49
defect/error management 31
delayed motor start option 19, 67
delayed start 40
depot repair 14
depot repair philosophy 14
DEXCPT 15
diagnostics 20
differential I/O circuit 40
differential interface signals 68
differential SCSI driver 7, 69
differential SCSI receiver 7, 69
differentiating features 5
DIFFSENS 40, 69, 71
dimensions 27
disable read ahead 12
disc access 11
disc drive
    termination 72
disc media 9
disc rotational speed 9
disconnect/reconnect 11
    control 11
    specification 11
discontinuity (DISC) bit 12
DRA bit 12
drive 26
drive activity 67
drive activity LED 39
drive capacity 9
    programmable 8
drive configuration 39
drive default mode parameter 33
drive failure 14
drive firmware 48
drive ID 33, 39
drive ID select 34, 35, 36
drive ID select jumper connector 33
drive ID/option select header 33
drive insertion 15
drive interface connector 57
drive internal 20
drive internal defects and errors 31
drive malfunction 14
drive mounting 27, 42
    constraints 13
drive option select header 37, 38
drive orientation 10, 41
drive power 33
drive primary defects list 31
drive reset 39
drive SCSI timing 74
drive select header 52
drive spindle 40
drive transfer 11
drive volume 33
drive warranty 14
dynamic spindle brake 7

## E

ECC 13
ECC correction 31
ECC correction capability 7
EFT defect list 31
EIA RS-485-1983 70
electrical characteristics 52, 67
electromagnetic compatibility 3
electromagnetic compatibility (EMC) 4
electromagnetic interference (EMI) 13
electromagnetic susceptibility 26
embedded servo 7
EMC compliance 3
EMI requirements 3
environment 41
environmental control 26
environmental interference 13
environmental limits 21
environmental requirements 13
EPROM 48
equipment malfunction 13
error 13
error management system 32
error rate 13
error rate calculation 13
error recovery 31
ESD 15
European Union requirements 3
EVPD bit 47
execution time 10

extended messages 43

## F

Fast-10 transfer rate 55
Fast-20 4
Fast-20 SCSI 5, 7, 10
FAST-20 transfer rate 56
Fast-20 transfer rate 55
Fast-40 SCSI 5, 7, 10
FAST-40 transfer rate 56
Fast-40 transfer rate 55
Fast-5 transfer rate 55
fault status 13
FCC rules and regulations 3
field repair 14
firmware 48
flat ribbon cable 67
flaw reallocation 10
format 46
format command 9
format time 10
formatted 8
formatting 33
front panel 27
front panel LED 67
FSW function 49

## G

GOOD 12
gradient 22, 24
ground 61
ground return 19
grounding 42

## H

hard reset 48
hardware error 14
HDA 5, 14, 22, 41, 42
    temperature 22
head and disc assembly. *See* HDA
heads 20
heat removal 41
heat source 41
high level format 33
high voltage differential 15
host 12, 31, 39, 40, 46, 55, 58, 61
host adapter 33
    adapter/initiator 58
host backplane wiring 55
host equipment 42, 56, 57
    DC power 57
    manufacturer 33
host I/O signal 33
host system 33
host system malfunction 13
host/drive operational interface 13
hot plug 7, 15
humidity 21, 24
HVD 15, 55, 68, 69, 70, 71

## I

I/O cable 61
I/O connector 39, 55
I/O line 40
I/O termination 72
identified defect 31
idle condition 21
initiator
    termination 72
inquiry command 47
inquiry vital product data 47
installation 33
installation guide 4, 8
installation instructions 33
instantaneous current peak 19
integrated SCSI controller 7
interface cable length 58
interface data 10
interface requirements 43
interface signals
    differential 68
    single-ended 68
interface timing 13
Interface transfer rates 55
interleave 7
interleave factor 9
internal data rate 9

## J

J1-auxiliary 33
jumper 8, 33, 39, 40, 67
jumper function description 40
jumper header 39
jumper plug 33
jumper plug TE 68
jumper plug TP 69
jumper plug type 33

## L

landing zone 7, 20
LB 11
logical 11
logical block 11, 12
logical characteristics 52
logical segment (mode select page 08h) 11
low level format 33
low voltage differential mode 15
LSI module 72
LVD 5, 55, 71
LVD mode 15

## M

magnetoresistive heads 5
mating connector 52, 56, 57
mating flat cable connector 56, 57
maximum case temperature 22
maximum current requirements 20
maximum operating current 19
maximum starting current 19
ME jumper 40
mean time between failure. *See* MTBF
media 7, 48
media defect 13
media defect induced error 13
medium error 14
message protocol 52
message protocol system 32
messages
    SCSI interface 43
miscellaneous features 51
mode page 01 48
mode page 08h 11
mode parameter 48
    page 08h 12
mode select command 11, 12, 48
mode select page 08h 12
mode sense command 48, 49
mode sense command page 08h 12
mode sense data 48, 49, 50
mode sense value 48
model number table 5
motor start command 11
motor start delay option 67
motor start option 10, 11, 19, 67
mounting configuration 27
mounting configuration dimensions 27, 28, 29
mounting constraints 13, 42
mounting point 42
mounting surface 42
mounting surface distortion 42
mounting surface stiffness 42
MR heads 5
MTBF 13, 14, 21
multimode drivers 15
multimode receivers 15
multiple segment 11
multi-segmented cache control 11

## N

noise 20
    audible 3, 7
nominal voltage 21
non-operating 24, 26
    temperature 22
non-operating vibration 26
nonshielded 50 conductor connector 56
nonshielded 68 conductor connector 57

## O

office environment 26
operating 24, 26
operating environment 14
operating option 33
operating parameter 48
operator intervention 13
option jumper 33
option jumper location 33
option select header 52
option select jumper 33
options 8
orientation 10, 24, 41
out-of-plane deflection 42
out-of-plane distortion 42
output voltage 68
overhead time 10

## P

package size 25
package test specification 4
packaged 25
parity 40
parity checking 40
parity error 40
partition or logical drive 33
PCB 14, 33, 39, 40, 41, 42, 48, 52, 55, 56, 58
    temperature 22
PCB circuit run 55
PD jumper 40
peak bits/inch 9
peak starting current 19
PERF 15
performance characteristics 9
performance degradation 24
peripheral I/O cable 20
physical buffer space 11
physical characteristics 52
physical damage 26
physical interface 52, 53, 54
physically contiguous blocks of data 12
power 19, 20, 40
power connector 19, 20
power control switch 11
power dissipation 21
power distribution 3
power requirements 19
power sequencing 20
power supply voltage 13
power-carrying conductor 57
power-on 33, 39, 67
power-on operating hours 14
power-on reset 48
power-up 20, 40
power-up hours 14

prefetch 11, 12
prefetch (read look-ahead) 11, 12
prefetch ceiling field 12
prefetch data 12
prefetch field 12
prefetch hit 12
prefetch mode 11
prefetch of contiguous blocks 12
prefetch operation 11, 12
prefetch segmented cache control 11
preventive maintenance 13, 14
printed circuit board. *See* PCB
PRML read channel electronics 5
product data page 47
programmable drive capacity 8

## R

radio interference regulations 3
RC bit 31
RCD 12
RCD bit 11
read 11
read command 11, 12
read continuous (RC) bit 31
read data 11
read error 13
read error rate 13, 31
read operation 11
read power dissipation 21
read retry count 31
read/write head 9
ready 48
receive diagnostic results 32
recommended mounting 25
recording code 9
recoverable seek error 14
reference documents 4
regulation 19
relative humidity 24
reliability 7
reliability and service 14
reliability specifications 13
remote ID selection 39
remote switch 33
repair facility 14
repair information 17
REQ/ACK offset 52
request sense command 32
request sense information 14
resonance 24
retrieved data 11

## S

S.M.A.R.T. 7, 15
safe power transmission 57
safety 3
saved value 48, 49
SCA 68
SCAM 7, 33
SCSI
  commands 44
  format commands 13
  interface data transfer rate 10
  messages 43
SCSI bus 33
SCSI bus cable 33
SCSI bus condition 51
SCSI bus I/O cable 40
SCSI bus ID 67
SCSI bus phase sequence 51
SCSI bus reset 15
SCSI command 31
SCSI Fast-20 10
SCSI Fast-40 10
SCSI I/O connector 53, 54
SCSI I/O termination 19
SCSI ID 33, 40
SCSI interface 10, 13, 55
SCSI interface cable 56
SCSI interface commands supported 44
SCSI interface connector 52
SCSI interface data 10
SCSI Interface Product Manual 3, 4, 5
SCSI systems error 32
SCSI systems error consideration 31
SCSI systems error management 32
SCSI-1 mode 44
SCSI-2 4, 10
SCSI-2/SCSI-3 49
SCSI-2/SCSI-3 mode 44
SCSI-3 (Fast-20 and Fast-40) interface 5
SCSI-3 Parallel Interface-2 (SPI-2) 55
SE 39, 40, 55, 71
SE drivers 15
Seagate support service 33
sector 11
sector interleave 9
sector size 7, 8, 10, 46
sector transfer 10
seek error 13, 14
seek positioning error 14
segment 11, 12
segment number 12
self-contained 11
Self-Monitoring Analysis and Reporting Technology. See S.M.A.R.T.
SE-LVD alternative 72
sense key 14
sequential read operations 12
service
  life 13, 14
  philosophy 14
  tools 14
servo data 6
SFF-8009 39

SFF-8046 specification 4
SFF-8046, SCA-2 specification 15
shielding 3
shipping 17
shipping container 22
shock 24
  and vibration 24
shock mount 42
signal ground 42
single connection attachment (SCA) 68
single ended I/O
  signal/contact assignment
    50 conductor 61
    68 conductor 62
    80 conductor 65
single unit shipping pack 8
single-ended drive 68
single-ended drivers 15
single-ended I/O 40
single-ended interface circuit 21
single-ended interface signals 68
single-ended SCSI driver 7, 68
single-ended SCSI receiver 7, 68
site installation 14
software interleave 12
source voltage 69
spare part 14
Spectrum Management Agency (SMA) 4
SPI 4
SPI-2 4
spindle 20
spindle startup 40
standard day 21
standards 3
start motor command 19
start unit command 40
start/stop time 10
status 32
status byte 10
STIR algorithm 8
stop spindle 11
Stop Spindle command 15
stop time 11
storage capacity 31
straight-in connector 58
strict bit in Mode page 00h 12
supply voltage 19
support services 77
synchronous data transfer 52
synchronous data transfer operation 75
synchronous data transfer period 52
synchronous transfer negotiation 15
synchronous transfer period 75
synchronous transfer rate 10
system chassis 42
system recovery procedures 13

## T

TE jumper 33, 55, 68, 72
technical support services 77
temperature 10, 21, 22, 41
  ambient 21
  case 21
  gradient 21
  maximum case 22
  non-operating 22
  PCB and HDA 22
  regulation 3
  *See also* cooling
terminated 20
termination 20
  active 72
  disc drive 72
  initiator 72
terminator 33, 40, 58, 68
  active 72
  passive 72
terminator circuit 40, 68
terminator enable jumper TE 33, 58, 72
terminator power 40, 61, 69, 73
  source selection jumper TP 72
terminator requirements 33, 72
termpower 40
TERMPWR 73
TP jumper 40, 55, 70
TP1 position 40
tracks/inch 9
tracks/surface, total 9
transfer period 52
transfer rate 10
troubleshooting 77
typical access time 10

## U

Ultra SCSI 4, 5, 7
unformatted 8
unrecoverable condition 13
unrecoverable error 13
unrecoverable seek error 14
Unrecoverable write error 13

## V

vibration 24, 26
vital product data 47
volatile memory 48
voltage 10, 19
voltage margin 10

## W

wall/bracket mounted connector 56
warranty 8, 16
WCE 12

wet bulb temperature 21
WP jumper 40
wrap-around 11
write caching 12
write error 13
    unrecoverable 13
write operation 12
write protect 40
write retry count 31

## X

X3.131-1994 4
X3T10/1071D 4
X3T10/1142D 4, 55, 56, 58, 68, 69, 71
X3T10/1143D 4, 73
X3T10/855D 4

## Z

zoned bit recording (ZBR) 7

**Seagate Technology, Inc.**
**920 Disc Drive, Scotts Valley, California 95066-4544, USA**
*Publication Number: 77767517, Rev. C, Printed in USA*