US 20040164896A1

(19) United States

(12) Patent Application Publication

(10) Pub. No.: US 2004/0164896 A1

(43) Pub. Date: Aug. 26, 2004

Evans

(54) PERSONAL SURVEILLANCE SYSTEM WITH LOCATING CAPABILITIES

(75) Inventor: James P. Evans, Manassas, VA (US)

Correspondence Address:
Patrick G. Billig
Dicke, Billig & Czaja, P.A.
701 Building, Suite 1250
701 Fourth Avenue South
Minneapolis, MN 55415 (US)

(73) Assignee: Lockheed Martin Corporation

(21) Appl. No.: 10/371,911

(22) Filed: Feb. 21, 2003

Publication Classification

(51) Int. Cl.[7] G01S 5/14

(52) U.S. Cl. 342/357.07; 342/357.1; 342/357.14

(57) ABSTRACT

A personal surveillance system configured to be worn by an individual includes a communication system configured to record communication files, a locating system configured to determine a location of the personal surveillance system, and a transmitter configured to send the communication files and the location of the personal surveillance system to a remote monitoring station. The locating system includes a satellite system interface configured to determine the location of the personal surveillance system and an alternate positioning system configured to determine the location of the personal surveillance system in at least one situation where the satellite system interface cannot determine the location of the personal surveillance system.

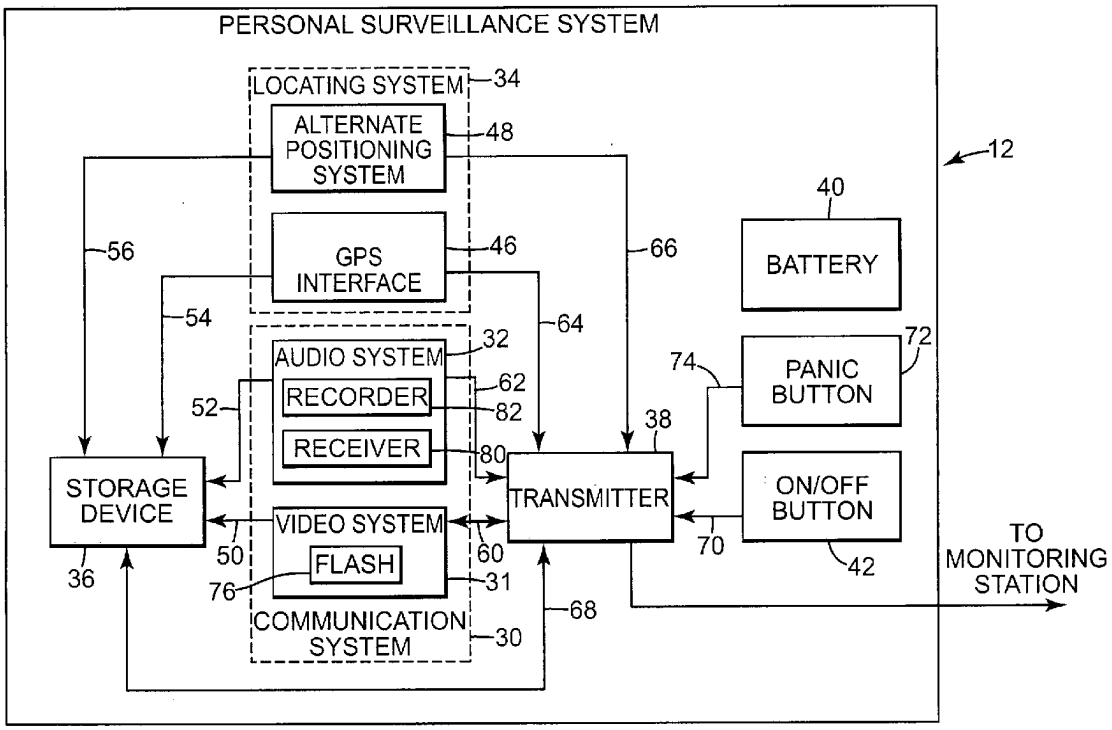

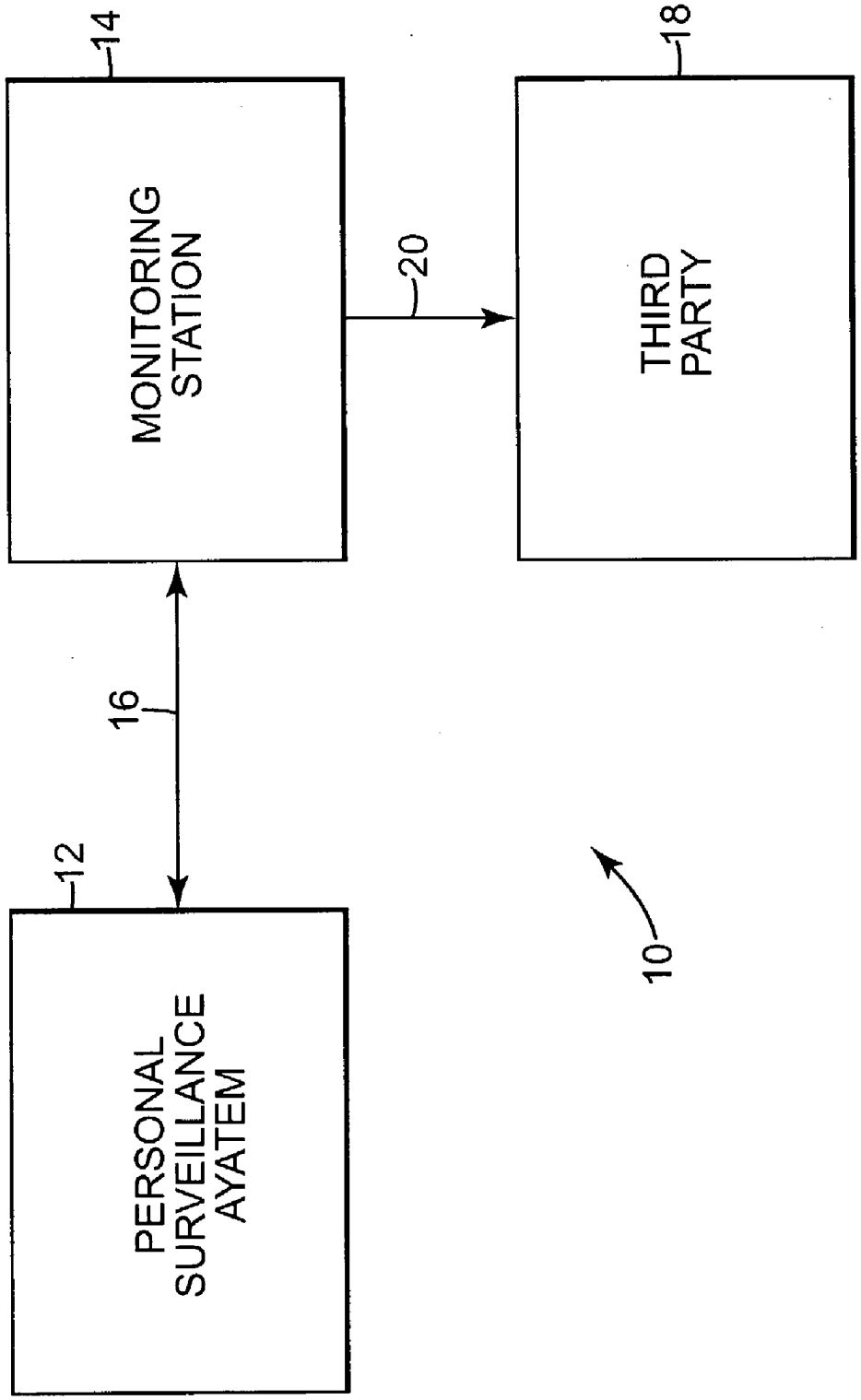
14
MONITORING STATION
20
18
THIRD PARTY
16
12
PERSONAL SURVEILLANCE AYATEM
10

Fig. 1

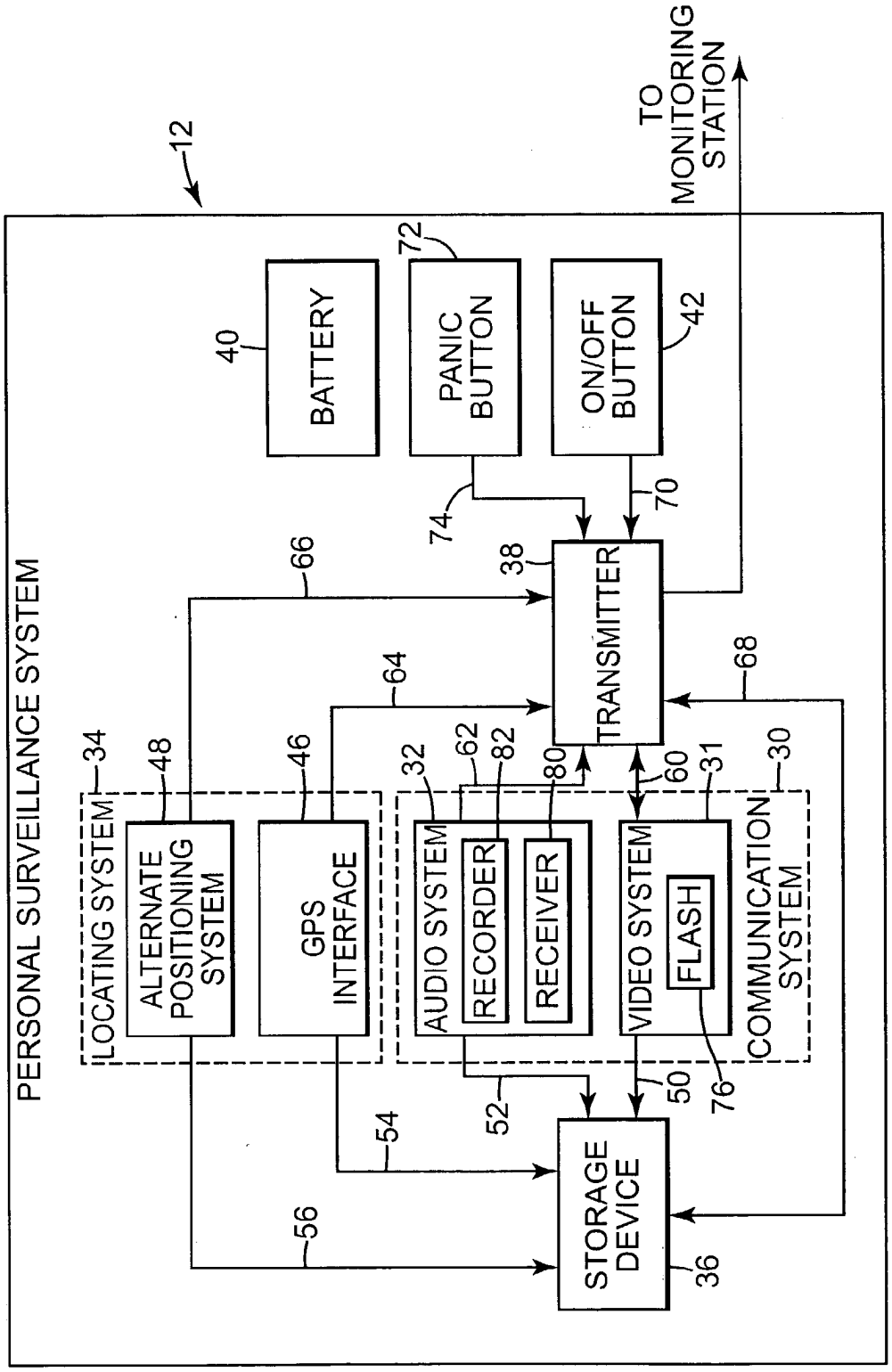
PERSONAL SURVEILLANCE SYSTEM
12
TO MONITORING STATION
BATTERY
40
PANIC BUTTON
72
ON/OFF BUTTON
42
74
70
66
38
TRANSMITTER
64
68
LOCATING SYSTEM
34
ALTERNATE POSITIONING SYSTEM
48
GPS INTERFACE
46
AUDIO SYSTEM
32
RECORDER
62
RECEIVER
82
80
VIDEO SYSTEM
60
FLASH
31
COMMUNICATION SYSTEM
30
76
50
52
54
56
STORAGE DEVICE
36

Fig. 2

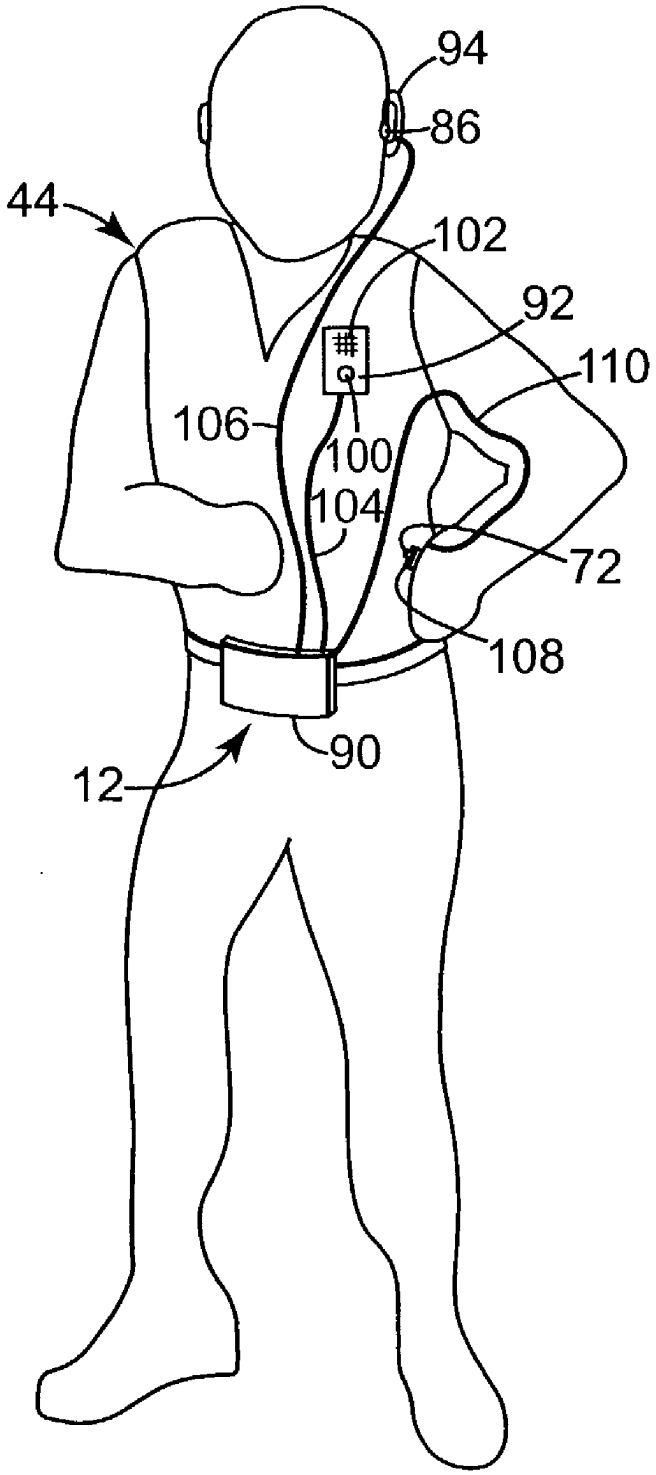

Fig. 3

PERSONAL SURVEILLANCE SYSTEM WITH LOCATING CAPABILITIES

THE FIELD OF THE INVENTION

[0001] The present invention generally relates to a surveillance system, and more particularly to a personal surveillance system with audio, video, and locating capabilities.

BACKGROUND OF THE INVENTION

[0002] Military, paramilitary, and even civilian individuals often enter hazardous environments. Whether the dangers of the environment are caused by battle, emergency, fire, unpredictable and/or dangerous people, etc., it is advantageous to allow a remote third party to monitor the environment and people encountered by an individual. In particular, it may be helpful to have a remote third party witness a traffic stop, an arrest, a military encounter, an assault, or other encounter to ensure safety and/or to verify an individual's account of the encounter.

[0003] As such, conventional surveillance systems have developed to perceive and capture audio and video files of the encountered circumstances and environment. Such systems may record the audio and video files collected to a storage device for later viewing and listening. Other systems additionally or alternatively transmit the collected files to a relatively remote monitor. The monitor may simply view and listen to the information to ascertain the true danger of the environment. The monitor may additionally be equipped to communicate information back to the individual, particularly when the surveillance system is configured to be worn on the individual's person.

[0004] Typically, the monitor is equipped to provide or send additional aid to an individual if it is ascertained that the environment or circumstances surrounding the individual so require. However, in order to send aid to an individual, the location of that individual must first be ascertained. In some instances, such as in a planned cooperative sting or mission, the location of the individual is known by the monitor prior to introduction of the individual to the hazardous environment. In other cases, the individual's location may be determined by the audio and video files recorded and/or transmitted. However, oftentimes audio and video files are insufficient to allow the monitor to determine the precise or even the approximate location of the individual, thereby, leaving the monitor without the means to send aid to the individual in an increasingly hazardous or even perilous environment or situation. Therefore, there is need for an improved surveillance system which can be employed by a monitor and/or third party to more easily ascertain the location of an individual in a hazardous environment in a wide variety of situations.

SUMMARY OF THE INVENTION

[0005] One aspect of the present invention provides a personal surveillance system configured to be worn by an individual. The personal surveillance system includes a communication system configured to record communication files, a locating system configured to determine a location of the personal surveillance system, and a transmitter configured to send the communication files and the location of the personal surveillance system to a remote monitoring station. The locating system includes a satellite system interface configured to determine the location of the personal surveillance system and an alternate positioning system configured to determine the location of the personal surveillance system in at least one situation where the satellite system interface cannot determine the location of the personal surveillance system.

[0006] Another aspect of the present invention provides a surveillance and monitoring system including a personal surveillance system and a remote monitoring system. The personal surveillance system includes a communication system configured to record communication files, a locating system configured to determine the location of the personal surveillance system, and a transmitter configured to send the communication files and the location of the personal surveillance system. The locating system includes a satellite system interface and an alternate positioning system. The satellite system interface is configured to determine the location of the personal surveillance system. The alternate positioning system is configured to determine the location of the personal surveillance system in at least one situation where the satellite system interface cannot determine the location of the personal surveillance system. The remote monitoring station is configured to receive and review the communication files and the location transmitted from the personal surveillance system.

[0007] Yet, another aspect of the present invention provides a method of surveillance including collecting communication files with a personal surveillance system, determining a location of the personal surveillance system, and sending the communication files and the determined location from the personal surveillance system to a remote monitoring station. Determining the location of the personal surveillance system includes determining the location of the personal surveillance system with a satellite system interface if the satellite system interface can determine the location of the persona surveillance system and determining the location of the personal surveillance system with an alternate positioning system if the satellite system interface cannot determine the location of the personal surveillance system.

BRIEF DESCRIPTION OF THE DRAWINGS

[0008] **FIG. 1** is a block diagram illustrating one embodiment of a surveillance and monitoring system according to the present invention.

[0009] **FIG. 2** is a block diagram illustrating one embodiment of a personal surveillance system according to the present invention.

[0010] **FIG. 3** is a schematic illustration of one embodiment of the personal surveillance system illustrated in **FIG. 2**.

DESCRIPTION OF THE PREFERRED EMBODIMENTS

[0011] In the following detailed description of the preferred embodiments, reference is made to the accompanying drawings which form a part hereof, and in which is shown by way of illustration specific embodiments in which the invention may be practiced. It is to be understood that other embodiments may be utilized and structural or logical changes may be made without departing from the scope of the present invention. The following detailed description,

therefore, is not to be taken in a limiting sense, and the scope of the present invention is defined by the appended claims.

[0012] One embodiment of a surveillance and monitoring system according to the present invention is generally illustrated at **10** in **FIG. 1**. Surveillance and monitoring system **10** includes a personal surveillance system **12** and a monitoring station **12**. Personal surveillance system **12** is worn or carried by an individual and collects information regarding the location and the environment of the individual wearing personal surveillance system **10**. Monitoring station **14** is remotely located relative to personal surveillance system **10**. Personal surveillance system **12** transmits the information regarding the location and the environment of the individual to monitoring station **14** via a wireless communication path **16**. In one embodiment, the information is in video, audio, and/or script format. Monitoring station **14** monitors, reviews, and interprets the incoming information to determine, among other things, whether the individual wearing the personal surveillance system **12** is in need of assistance. In one embodiment, monitoring station **14** is further able to send a response to personal surveillance system **12** via wireless communication path **16**. In one embodiment, the response is sent in audio format.

[0013] In one embodiment, monitoring station **14** includes hardware and software to receive and monitor the information from personal surveillance system **12** via wireless communication path **16**. In one embodiment, monitoring station is operated by a security company such as Brinks, ADT, etc. Wireless communication path **16** between personal surveillance system **12** and monitoring station **14** includes one or more known communication protocols such as Wireless Application Protocol (WAP), Bluetooth, Infrared (IrDA), and/or other communication and application protocols known to those skilled in the art. Personal surveillance system **12** and monitoring station **14** each include communication hardware and software known in the art for implementing these protocols. In another embodiment, wireless communication path **16** includes communication means such as a cellular network or a wireless link to a network (e.g., an intranet or internet network, such as the Internet).

[0014] In one embodiment, surveillance and monitoring system **10** further includes a third party **18** remotely located with respect to personal surveillance system **12** and monitoring station **14**. Monitoring station **14** communicates with third party **18** via communication link **20**. More particularly, monitoring station **14** communicates with third party **18** to request that assistance be sent to personal surveillance system **12**. Accordingly, monitoring station **14** communicates some or all of the information received from personal surveillance system **12** supplemented by the interpretation of the monitoring station **14** to third party **18**. In turn, third party **18** provides assistance at the location of personal surveillance system **12** as indicated in the information indirectly received from personal surveillance system **12**. In one embodiment, communication link **20** is similar to wireless communication path **16**. In another embodiment, communication link **20** is a telephone line or a cable connection making use of a network, such as an intranet or an internet network.

[0015] In one embodiment, third party **18** is a 911 emergency center, a police dispatch station, a fireman dispatch station, a hospital, an ambulance dispatch station, a military dispatch station, or other station or center capable of sending assistance. In another embodiment, third party **18** is a family member or acquaintance of the individual wearing the personal surveillance system **12**. In one embodiment, monitoring station **14** is connected to a plurality of third parties (not shown). As such, third party **18** provides assistance including one or more of physical protection, crime prevention, crime intervention, rescue, medical aid, personnel back-up, moral support, etc.

[0016] **FIG. 2** illustrates one embodiment of personal surveillance system **12** according to the present invention. Personal surveillance system **12** includes a communication system **30**, a locating system **34**, a storage device **36**, a transmitter **38**, a battery **40** and an on/off button **42**. The storage device may be a hard drive, another type of electronic storage device, or any other suitable storage device. Communication system **30** and locating system **34** each collect information regarding the environment and the location of personal surveillance system **12** and, consequently, of an individual **44** (illustrated in **FIG. 3**) wearing the personal surveillance system **12** in at least one of video, audio, and script formats. In one embodiment, the system within body pack **90** is embedded into a bulletproof vest or garment.

[0017] In particular, in one embodiment communication system **30** includes a video system **31** and an audio system **32**. Video system **31** collects video files of the environment of individual **44**, and audio system **32** collects audio files from the environment of individual **44**. In one embodiment, locating system **34** includes a satellite system interface **46** and an alternate positioning system **48** to determine the location of individual **44**. Video system **31**, audio system **32**, satellite system interface **46**, and alternate positioning system **48** are connected to storage device **36** via communication links **50**, **52**, **54**, and **56**, respectively. As such, video system **31**, audio system **32**, satellite system interface **46**, and alternate positioning system **48** can relay collected information to storage device **36** for storage. Similarly, video system **31**, audio system **32**, satellite system interface **46**, and alternate positioning system **48** are connected to transmitter **38** via communication links **60**, **62**, **64**, and **66**, respectively. Transmitter **38** is adapted to forward audio, video, and script files received via links **60**, **62**, **64**, and **66** to monitoring station **14** and, in one embodiment, to receive files from monitoring station **14**, via wireless communication path **16**.

[0018] In addition, storage device **36** and transmitter **38** are coupled via communication device **68**, such that transmitter **38** can request stored files directly from storage device **36** and/or storage device **36** can send stored files directly to transmitter **38**. On/Off button **42** is coupled to transmitter **38** via communication link **70**. On/Off button **42** is accessible by the individual **44**, who can activate or deactivate communication between transmitter **38** and monitoring station **14** by interacting with button **42**. Although described here as a button, in other embodiments, on/off button **42** is a switch, lever, or any other type of indicator known in the art.

[0019] Battery **40** provides power to the entire personal surveillance system **12**. Although not shown for clarity, battery **40** is directly or indirectly electronically connected and provides power to video system **31**, audio system **32**, satellite system interface **46**, alternate positioning system **48**,

storage device **36**, and transmitter **38**. In one embodiment, battery **40** is an integrated battery package including either a seal lead-acid battery, a nickel-cadmium battery, or any other battery known in the art and capable of supplying sufficient voltage to personal surveillance system **12**.

[**0020**] In one embodiment, personal surveillance system **12** further includes a panic button **72** coupled to transmitter **38** via communication link **74**. Panic button **72** is also accessible by the individual **44** and can be activated by individual **44** to place monitoring station **14** on heightened alert regarding review of the environment and location of individual **44**. As such, panic button **72** is a button, a switch, or a lever, or other indicating device that can be activated or deactivated by the individual **44** at will. For example, when individual **44** becomes increasingly wary of the hazardous environment in which he/she is surrounded, he/she can activate panic button **72** placing monitoring station **14** on heightened alert. Once on heightened alert, monitoring station **14** can review the audio, video, and/or script files incoming from the individual's personal surveillance system **12** with extra care and caution to determine whether or not individual **44** is in need of assistance. In one embodiment, upon activation of panic button **72**, monitoring station **14** immediately sends assistance or contacts third party **18** to send assistance. In one embodiment, communication link **74** is an electrical connection, a wireless connection, or other connection as is known in the art to be capable of communication activation of panic button **72** to transmitter **38**.

[**0021**] Video system **31** includes a video recorder or camera unit capable of recording digital video files of the environment and of being worn or carried by individual **44**. In one embodiments, video recorder is worn on a lapel pin, on a headset, a pair of glasses, a body strap, on a collar, a pendant, or any other object facilitating attachment to the body of individual **44**. In one embodiment, video system **31** includes any digital camera commercially available and capable of being worn or carried by individual **44**. In one embodiment, the camera is capable of being worn or carried by individual **44** in a substantially concealed manner. In one embodiment, there are both forward-facing and rear-facing cameras. In one embodiment, there are four or more cameras integrated to achieve 360-degree coverage, such as by mounting four or more cameras on a collar of individual **44**.

[**0022**] In one embodiment, video recorder is a video interest recorder or a micro-video camera. An example micro-video camera utilizes a digital signal processing (DSP) technology and a charge-coupled devices (CCD) format. In one embodiment, video system **31** is capable of recording both high-quality and low-quality images or recording high-quality images which can be compressed into low-quality images. In such a case, the high-quality images are sent via communication link **50** to be stored by storage device **36**, and low-quality streaming images are sent via communication link **60** to transmitter **38** for forwarding to monitoring station **14**. In one embodiment, low-quality images have approximately a 100×100 resolution, and high-quality images have approximately a 400×400 resolution. In one embodiment, low quality images have approximately a 200×200 resolution, and high quality images have approximately a 2048×2048 resolution. In one embodiment, the video camera includes infrared imaging for optimum night-time operation. In one embodiment, video files are sent to storage device **36** and transmitter **38** at a two-second frame rate.

[**0023**] Video system **31** optionally includes a flash **76**. Flash **76** can facilitate recording video files in dark areas and can be continuously on while personal surveillance system **12** is in use or, alternatively, can be used on an case by case basis. Flash **76** can also be used on an instant by instant basis to distract an intruder or perpetrator.

[**0024**] One embodiment of audio system includes a recorder **80** and an optional receiver **82**. Recorder **80** is adapted to capture or record the audio aspects of the environment surrounding personal surveillance system **12** and, thereby, individual **44**. In one embodiment, recorder **80** includes a microphone **82** (one embodiment of which is illustrated in **FIG. 3**) worn or carried by individual **44** to facilitate detection and recording of audio files. In one embodiment, the microphone is worn on a lapel pin, a headset, a pair of glasses, a body strap, or any other object facilitating attachment to the body of individual **44**. In one embodiment, recorder **80** includes any digital audio recorder commercially available and capable of being worn or carried by individual **44**. In one embodiment, the recorder **80** is capable of being worn or carried by individual **44** in a substantially concealed manner. Audio files captured by recorder **82** are sent to storage device **36** and transmitter **38** for storage and forward to monitoring station **14**, respectively.

[**0025**] Optional receiver **84** is capable of receiving audio transmissions from monitoring station **14** via wireless communication link **16**, transmitter **38**, and communication link **62** and synthesizing the audio transmission for play to individual **44**. As such, receiver **82** includes a speaker **86** (one embodiment of which is illustrated in **FIG. 3**) to facilitate playing the audio transmission for individual. In one embodiment, the speaker is worn on an ear piece, a lapel pin, a headset, a pair of glasses, a body strap, or any other object facilitating attachment to the body of individual **44**. In one embodiment, audio system **32** includes any receiver **82** with speaker commercially available and capable of being worn or carried by individual **44**. In one embodiment, the receiver **82** and speaker **86** are capable of being worn or carried by individual **44** in a substantially concealed manner.

[**0026**] Although video system **31** and audio system **32** can be formed in a independent manner, as described above, video system **31** and audio system **32** can be partially or fully integrated. In one embodiment, recorder **32** is formed as part of video system **31**. In particular, in one embodiment, the camera of video system **31** includes a microphone, and the camera is capable of recording both video and audio files or audio/video files and forwarding both video and audio files or the audio/video files to storage device **36** and transmitter **38**.

[**0027**] In one embodiment, satellite system interface **46** interacts with a global positioning system (GPS). GPS is a satellite-based navigational and location system which aids in determining the location of individuals, objects, or landmarks nearly anywhere on Earth. GPS was developed by the United States Defense Department as part of a satellite navigation system and includes up to twenty-four satellites. Four satellites are spaced around each of six circular orbits, which are inclined at an angle of fifty-five degrees relative

to the Earth's equator and are spaced around the Earth at approximately sixty degree intervals. The satellites move relative to time on Earth below them. As such, four or more satellites will theoretically have line of sight access to most points on the Earth's surface. If an object has line of sight access with at least three satellites at one time, GPS can be used to ascertain the position of the object anywhere on Earth.

[**0028**] Accordingly, satellite system interface **46** interacts with the GPS satellites to determine the location of personal surveillance system **12**, and thereby individual **44**. As such, satellite system interface **46** includes hardware and/or software capable of converting signals from the GPS satellites into location information. Satellite system interface **46** further sends the location information to storage device **36** via communication link **5**, transmitter **38**, and communication link **64**. In one embodiment, satellite system interface **46** includes a small LCD screen which displays the location information to individual **44**.

[**0029**] In an alternative embodiment, satellite system interface **46** interacts with a global navigation satellite system (GLONASS) instead of GPS. GLONASS, developed by the Soviet Union and maintained by the Russian Republic, is a satellite system consisting of twenty-four satellites spaced around three orbits positioned at approximately 120 degree intervals around the Earth. GLONASS is also capable of locating nearly any object on Earth in which at least three satellites are able to establish a line of sight relationship. In this embodiment, satellite system interface **46** accordingly interacts with GLONASS satellites rather than GPS satellites to determine location information.

[**0030**] Although GPS or GLONASS systems are generally reliable locating systems, both GPS and GLONASS often cannot provide a location of an object or individual within buildings, natural canyons, or urban canyons. Therefore, as described above, personal surveillance system **12** also includes an alternate positioning system **48** to facilitate determination of the location of personal surveillance system **12** when it is located in a building, natural canyon, urban canyon, or other area where satellite system interface **46** is unable to effectively communicate with the GPS or GLONASS satellites. In one embodiment, alternate positioning system **48** includes an inertial navigational unit (INU), an eGPS unit, or other suitable locating system.

[**0031**] The INU utilizes an initial location input, which is received from satellite system interface **46**, to determine subsequent locations of the INU without the use of external information. Typically, the INU includes gyroscopes, accelerometers, a navigational computer, and a clock. In one embodiment, the INU includes three mutually orthogonal gyroscopes and three mutually orthogonal accelerometers. Each of the three accelerometers measures an acceleration component along its respective axis. The three acceleration components are vectorily summed to arrive at one acceleration vector. The gyroscopes collect orientation information that is combined with the summed acceleration vector to provide the total acceleration of the INU in 3-D format. At the end of a predetermined time interval of the clock, the total acceleration is integrated once to get the velocity vector of the INU. A second integration provides the position vector and, thereby, the position or location of the INU with respect to the initial input location. In one embodiment, the INU provides position information accurate to within approximately 3 feet after utilizing the initial location input to INU for over approximately one mile.

[**0032**] One embodiment of an e-GPS unit utilizes location-enabling chips, which wirelessly interact with multiple cellular towers to ascertain the location of the chips by triangulation and the length of time required to receive a signal from each of the multiple cellular towers. In one embodiment, the e-GPS unit provides position information accurate to within approximately 15 feet outdoors and to within approximately 80 to 165 feet in dense urban environments. In one embodiment, alternate positioning system **48** is an e-GPS interface provided by Cell-Guide of Revovot, Israel.

[**0033**] In one embodiment, alternate positioning system **48** is any other commercially available system known to those of skill in the art and adapted to determine the location of personal surveillance system **12** without utilizing GPS or GLONASS satellites. In one embodiment, alternate positioning system **48** functions to determine the position of personal surveillance system **12** when satellite system interface **46** is unable to ascertain the location of personal surveillance system, i.e. when satellite system interface **46** cannot establish contact with at least three GPS satellites. In another embodiment, alternate positioning system **48** continuously functions to determine the position of personal surveillance system **12** while the system **12** is activated.

[**0034**] As described above, storage device **36** receives information from video system **31**, audio system **32**, and locating system **34**. Storage device **36** stores the information received for later retrieval or viewing. In one embodiment, storage device **36** stores information received with a time stamp indicating the time at which the information was recorded. The time stamp aids subsequent reconstruction of the environment and/or situation for which information was collected.

[**0035**] In one embodiment, transmitter **38** is coupled to storage device **36** via communication link **68**, and transmitter **38** is adapted to send responses from monitoring station **14** to storage device **36** for storage and time stamping. In one embodiment (not shown), on/off button **42** and/or panic button **72** are directly or indirectly coupled with storage device **36**, which records the time at which the on/off button **42** or the panic button **72** was activated and/or deactivated. As such, storage device **36** contains a record of substantially all information collected during a recorded time interval.

[**0036**] In one embodiment, storage device **36** is any commercially available storage device capable of storing audio, video, and location information and sized to fit on the person of individual **44**. In one embodiment, storage device **36** fits on the person of individual **44** in a substantially concealed manner. In one embodiment, storage device **36** is a hard drive or other memory device with removable memory units, such as floppy disks, compact discs, MP3s, etc. In one embodiment, storage device **36** is adapted to store 20-80 GB of information.

[**0037**] Transmitter **38** is adapted to collect information, to modify the information to synthesize a transferable signal, and to transmit the signal to monitoring station **14** via wireless communication path **16**. In one embodiment, transmitter **38** is adapted to synthesize a signal for and transfer a

signal using one or more of the following communication protocols: WAP, Bluetooth, IRDA, or other communication protocol known to those of ordinary skill in the art. In one embodiment, transmitter **38** synthesizes a signal for transfer over a more conventional means such as a wireless link to a network (e.g., an intranet or internet network, such as the Internet).

[**0038**] In one embodiment, personal surveillance system **12** includes one or more additional components such as a processor, a video screen, a keyboard, a stylus, and/or a blinking light (none of which are illustrated in the attached figures). In one embodiment, this video screen is on a wristwatch-like device .The processor facilitates control of and coordinates the transfer of information between the components of personal surveillance system **12**. The video screen facilitates review of the collected information by individual **44**. The keyboard or stylus are of a type commercially available and provide an additional interface between personal surveillance system **12** and individual **44**. The blinking light, or similar equivalent, signals to individual **44** and to others that personal surveillance system **12** is capturing data regarding the surrounding environment and the location of personal surveillance system **12**. In time, after regular use in civilian society, the blinking light may become a warning or deterrent system to prevent predators from committing crimes or wrongful acts to or around individual **44** wearing personal surveillance system **12** due to fear of the consequences of identification in connection with such acts. As such, the blinking light would function in much the same way as a similar blinking light functions in a car to deter thieves from stealing that particular car for fear of activating an alarm system.

[**0039**] **FIG. 3** generally illustrates one embodiment of how personal surveillance system **12** is worn on individual **44**. Individual **44** supports some or all of the personal surveillance system via a body pack **90**, a lapel pin **92** and an ear piece **94**. Body pack **90** supports one or more of locating system **34**, storage device **36**, transmitter **38**, battery **40**, and on/off button **42**. In one embodiment, body pack **90** includes one or more compartments **96** for receiving the components of personal surveillance system **12** and attached to a belt **98**, which is removably secured to individual **44**.

[**0040**] In one embodiment, lapel pin **92** includes at least one of a camera **100** of video system **31** and a microphone **102** of audio system **32**. The components on lapel pin **92** are connected to the components housed in or on body pack **90** via a wire **104**. In one alternative embodiment, the components on lapel pin **92** are wirelessly connected to the components on or in body pack **90**. Notably, in one embodiment, a portion of video system **31** and a portion of audio system **32** are supported by body pack **90**.

[**0041**] In one embodiment, ear piece **94** facilitates attachment of speaker **86** to individual **44**. Speaker **86** is connected to the remaining components of audio system **32** on or in body pack **90** via wire **106**. In an alternative embodiment, speaker **86** is wirelessly connected to the remaining components of audio system **32**. In one embodiment, panic button **72** is contained on a hand-held control **106** for easy and immediate access by individual **44**. Panic button is connected to the components supported by body pack **90** via wire **110**. In one alternative embodiment, panic button is wirelessly connected to the components supported by body pack **90**. Notably, the configuration of the components of personal surveillance system **12** can be attached to individual **44** in a myriad of ways in order to achieve the desired concealment, access, and cost of the particular application.

[**0042**] Referring to **FIGS. 1, 2**, and **3**, individual **44** interacts with on/off button **42** to activate the personal surveillance system **12**. Upon activation, transmitter **38** receives information collected by video system **31**, audio system **32**, and locating system **34**. Transmitter **38** synthesizes the information received into the proper format and per the proper protocol to send the information to monitoring station **14** via wireless communication path **16**. Upon receipt of information, monitoring station **14** reviews and interprets the information received to determine if individual **44** is in an environment or a situation that requires assistance to be sent to individual **44**. If monitoring station **14** determines that individual **44** is in need of assistance, monitoring station **14** sends assistance to the location of individual **44** as ascertained by the information received from locating system **34** via transmitter **38**. In one embodiment, if monitoring station **14** determines that individual **44** is in need of assistance, monitoring station **14** contacts third party **18**, and third party **18** sends or provides assistance to individual **44** at the ascertained location.

[**0043**] Following activation, information collected by video system **31**, audio system **32**, and locating system **34** is substantially simultaneously sent to storage device **36**. Storage device **36** stores the information for future access and review. In one embodiment, monitoring station **14** can access storage device **36** via transmitter **38** to extract and review previously stored information files. In one embodiment, video system **31** sends low-quality video files to monitoring station **14** via transmitter **38** and sends high-quality video files to storage device **36**. As such, monitoring station **14** can accesses the high-quality video files by extracting the files from storage device **36** via transmitter **38**. In one embodiment, monitoring station **14** can send audio responses to individual **44** via transmitter **38** and receiver **80**. As such, monitoring station **14** can interact with individual **44** by exchange of audio transmissions.

[**0044**] Throughout activation, interaction between panic button **72** and individual **44** places monitoring station **14** on a heightened alert, which necessitates closer review of the information incoming from personal surveillance system **12** worn by individual **44**. In one embodiment, interaction between panic button **72** and individual **44** prompts monitoring station **14** to send immediate assistance to individual **44** or to contact third party **18** to send immediate assistance to individual **44**.

[**0045**] Subsequent interaction between on/off button **42** and individual **44** causes personal surveillance system to stop collecting, sending, or storing information. In one embodiment, subsequent interaction between on/off button and individual **44** causes battery **40** to stop providing power to the components or personal surveillance system **12**. In one embodiment, information previously stored in storage device **36** can subsequently be accessed via temporary connection to a commercial computer processing unit (not shown).

[**0046**] Having capabilities to collect, store, and transmit video, audio, and location script files concerning the environment and/or situation of an individual, the personal

surveillance system is useful in providing assistance to any such individual located in a hazardous environment or situation. Similar capabilities permit files recreating the individual's experience to be stored for subsequent access. Such access will allow the environment and situation witnessed by the individual to be verified and will allow the environment and situation to be revisited by other individuals for additional details should it be deemed necessary. In short, the personal surveillance system increases the safety and the accountability of the individual wearing or carrying the system as well as the safety and the accountability of those around him or her.

[**0047**] Although specific embodiments have been illustrated and described herein for purposes of description of the preferred embodiment, it will be appreciated by those of ordinary skill in the art that a wide variety of alternate and/or equivalent implementations calculated to achieve the same purposes may be substituted for the specific embodiments shown and described without departing from the scope of the present invention. Those with skill in the chemical, mechanical, electro-mechanical, electrical, and computer arts will readily appreciate that the present invention may be implemented in a very wide variety of embodiments. This application is intended to cover any adaptations or variations of the preferred embodiments discussed herein. Therefore, it is manifestly intended that this invention be limited only by the claims and the equivalents thereof.

What is claimed is:

1. A personal surveillance system comprising:

a communication system configured to record communication files;

a locating system configured to determine a location of the personal surveillance system, the locating system including:

a satellite system interface configured to determine the location of the personal surveillance system, and

an alternate positioning system configured to determine the location of the personal surveillance system in at least one situation where the satellite system interface cannot determine the location of the personal surveillance system;

a transmitter configured to send the communication files and the location of the personal surveillance system to a remote monitoring station; and

wherein the personal surveillance system is configured to be worn by an individual.

2. The personal surveillance system of claim 1, wherein the communication system includes an audio system configured to record audio files.

3. The personal surveillance system of claim 2, wherein the audio system includes a receiver configured to facilitate communication from the remote monitoring station to the individual.

4. The personal surveillance system of claim 1, wherein the communication system includes a video system configured to record video files.

5. The personal surveillance system of claim 4, wherein the video system includes a flash.

6. The personal surveillance system of claim 4, wherein the communication system further includes an audio system configured to record audio files.

7. The personal surveillance system of claim 1, wherein the satellite system interface interacts with a global positioning system (GP S).

8. The personal surveillance system of claim 1, further comprising a storage device configured to store at least one of the communication files and the location of the personal surveillance system.

9. The personal surveillance system of claim 8, wherein the storage device includes at least one of a hard drive and other type of electronic storage device.

10. The personal surveillance system of claim 1, wherein the alternate positioning system includes an inertial navigational unit.

11. The personal surveillance system of claim 1, wherein the alternate positioning system includes e-GPS.

12. The personal surveillance system of claim 1, further comprising a panic button.

13. A surveillance and monitoring system comprising:

a personal surveillance system configured to be worn by an individual, the personal surveillance system including:

a communication system configured to record communication files;

a locating system configured to determine a location of the personal surveillance system, the locating system including:

a satellite system interface configured to determine the location of the personal surveillance system,

an alternate positioning system configured to determine the location of the personal surveillance system in at least one situation where the satellite system interface cannot determine the location of the personal surveillance system, and

a transmitter configured to send the communication files and the location of the personal surveillance system; and

a remote monitoring station configured to receive and review the communication files and the location transmitted from the personal surveillance system.

14. The surveillance and monitoring system of claim 13, wherein the personal surveillance system further comprises a storage device configured to store at least one of the communication files and the location of the personal surveillance system.

15. The surveillance and monitoring system of claim 14, wherein the storage device includes at least one of a hard drive and other type of electronic storage device.

16. The surveillance and monitoring system of claim 13, wherein the alternate positioning system includes an inertial navigational unit.

17. The surveillance and monitoring system of claim 13, wherein the alternate positioning system includes e-GPS.

18. The surveillance and monitoring system of claim 13, wherein the personal surveillance system further comprises a panic button.

19. The surveillance and monitoring system of claim 13, wherein the communication system includes a receiver

configured to facilitate communication from the remote monitoring station to the individual.

20. A method of surveillance comprising:

collecting communication files with a personal surveillance system;

determining a location of the personal surveillance system including:

determining the location of the personal surveillance system with a satellite system interface if the satellite system interface can determine the location of the personal surveillance system, and

determining the location of the personal surveillance system with an alternate positioning system if the satellite system interface cannot determine the location of the personal surveillance system; and

sending the communication files and the determined location from the personal surveillance system to a remote monitoring station.

21. The method of claim 20, further comprising storing at least one of the communication files and the location of the personal surveillance system in a storage device of the personal surveillance system.

22. The method of claim 20, wherein collecting communication files includes at least one of collecting audio files and collecting video files.

23. The method of claim 20, wherein determining the location of the personal surveillance system with a satellite system interface includes the satellite system interface interacting with a global positioning system.

24. The method of claim 20, wherein the alternate positioning system includes an inertial navigational unit.

25. The method of claim 20, wherein the alternate positioning system includes e-GPS.

* * * * *