UNITED STATES PATENT AND TRADEMARK OFFICE

BEFORE THE PATENT TRIAL AND APPEAL BOARD

BOE TECHNOLOGY GROUP CO., LTD.,
Petitioner

v.

OPTRONIC SCIENCES LLC,
Patent Owner

IPR2024-01130
Patent 7,168,842

DECLARATION OF ERIC BRETSCHNEIDER, PH.D.

TABLE OF CONTENTS

I. INTRODUCTION 1

II. BACKGROUND AND QUALIFICATIONS 2

III. TECHNOLOGY BACKGROUND 10

A. LED Packaging 11

B. Heat Management in LED Systems 13

IV. THE '842 PATENT 19

V. SUMMARY OF THE ALLEGED PRIOR ART 22

A. Overview of Uekusa 22

B. Overview of Isoda 24

C. Overview of Kurokawa 26

D. Overview of AAPA 28

E. Analogous Art 29

VI. THE LEVEL OF ORDINARY SKILL IN THE ART 31

A. Dr. Baker is Not a POSITA for the '842 Patent 37

VII. APPLICABLE LEGAL STANDARDS 39

A. Burden of Proof 39

B. Date of Invention 39

C. Anticipation 39

D. Obviousness 40

E. Claim Construction 44

F. Section 112(f) Means Plus Function 45

G. Section 112 Definiteness 46

VIII. CLAIM CONSTRUCTION 47

A. "fastener" (all claims) 47

B. "heat dissipating means . . . for conducting a heat generated thereon" (claims 6 and 9) . 48

C. "the circuit board connecting the second portion" (claims 5 and 7) 49

IX. Challenge 1: The Petition's Anticipation Theory Based on Uekusa Fails to Disclose All Elements of Claims 5-9 49

A. Uekusa Does Not Disclose an L-shaped Fastener (all claims) 49

B. Uekusa Does Not Disclose "the circuit board connecting the second portion" (claims 5 and7) 59

C. No Heat Dissipating Means (Claims 6 and 9) 60

1. Claim 3 65
2. Claim 5 66
3. Claim 6 66
4. Claim 7 66
5. Claim 8 67
6. Claim 9 67

X. Challenge 2: The Petition's Obviousness Theory Based on Uekusa and Isoda Fails to Disclose All Elements of Claims 5-9 67

A. Challenge 2 fails because Isoda Fails to Cure the Deficiencies of Uekusa 68

B. No Motivation to Combine: the proposed modifications go against the explicit teachings of the references 68

C. The Petition's combination would frustrate Uekusa's intended purpose, which a person of ordinary skill in the art would not be motivated to do 77

1. Claim 3 78
2. Claim 5 79
3. Claim 6 79
4. Claim 7 79
5. Claim 8 80
6. Claim 9 80

XI. Challenge 3: The Petition's Obviousness Theory Based on Uekusa and what was admitted to be prior art in the '842 Patent ("AAPA") Fails to Disclose All Elements of Claims 6 and 9 .. 80

XII. Challenge 4: The Petition's Anticipation Theory Based on Kurokawa Fails to Disclose All Elements of Claims 5-9 83

A. No L-shaped Fastener (all claims) 85

B. No Heat Dissipating Means (Claims 6 and 9) 91

1. Claim 3 97
2. Claim 5 97
3. Claim 6 98
4. Claim 7 98
5. Claim 8 99
6. Claim 9 99

XIII. Challenge 5: The Petition's Obviousness Theory Based on Kurokawa Fails to Disclose All Elements of Claims 7-9 100

1. Claim 7 100
2. Claim 8 101
3. Claim 9 101

XIV. Challenge 6: The Petition's Obviousness Theory Based on Kurokawa and Isoda Fails to Disclose All Elements of Claims 5-9 102

A. Isoda Does Not Cure the Deficiencies of Kurokawa 102

B. Hindsight: A POSITA Would Not Be Motivated to Combine Kurokawa and Isoda 102

1. Claim 3 106
2. Claim 5 106
3. Claim 6 107
4. Claim 7 108
5. Claim 8 108
6. Claim 9 109

XV. CONCLUSION 109

I, Eric Bretschneider, declare as follows:

I. INTRODUCTION

1. I have been retained by counsel for Patent Owner Optronic Sciences LLC in this proceeding. My credentials are described in my curriculum vitae, which is Exhibit 2021. I offer this report in response to the Petition for *Inter Partes* Review, Case No. 2024-01130 regarding U.S. Patent No. 7,168,842 (the "'842 Patent"), filed by Petitioner Boe Technology Group Co., Ltd.

2. I have been asked by Patent Owner's counsel to offer technical opinions relating to the '842 Patent, the alleged prior art, and the arguments and opinions presented by Petitioner and its expert, Dr. R. Jacob Baker.

3. I am being compensated at my standard consulting rate of $500 an hour, plus out-of-pocket expenses. My compensation does not depend on the testimony that I express in this Declaration, or on the outcome of these cases.

4. I have reviewed the papers and exhibits filed in this proceeding as of the date my declaration is signed. I understand that Petition challenged the patentability of claims 3-9 of the '842 Patent. Specifically, the Petition sets forth the following challenges:

Ground	Claims	Stat. Basis	Prior Art
1	3-9	35 U.S.C. § 102	Uekusa
2	3-9	35 U.S.C. § 103	Uekusa, Isoda
3	6, 9	35 U.S.C. § 103	Uekusa, Applicant Admitted Prior Art (AAPA)
4	3-9	35 U.S.C. § 102	Kurokawa
5	4, 7-9	35 U.S.C. § 103	Kurokawa
6	3-9	35 U.S.C. § 103	Kurokawa, Isoda
7	3, 4	35 U.S.C. § 102	Fukuta
8	4	35 U.S.C. § 103	Fukuta

5. I understand that Patent Owner filed a Preliminary Response. I also understand that the Patent Owner disclaimed claims 3 and 4. In its Institution Decision, I understand that the Board decided to institute proceedings on grounds 1-5. Thus, I understand that the "Challenged Claims" that remain in this case are claims 5-9.

6. In my opinion the Challenged Claims 5-9 are not anticipated or rendered obvious by any of the applied references or combination thereof.

7. After performing the analysis described herein and applying the standard outlined below, in my opinion, none of the authorized grounds provide a basis for concluding that any of the Challenged Claims of the '842 Patent should be found invalid. My opinions are based on the record evidence, my knowledge and experience in the field, and my opinion as to the level of ordinary skill in the art.

II. BACKGROUND AND QUALIFICATIONS

8. My complete qualifications and professional experience are described in my Curriculum Vitae, a copy of which is attached as Exhibit 2021.

9. I have over 30 years of experience with LEDs, displays, lighting fixtures, and lighting including a comprehensive background in a full range of LED technologies, including solid state lighting (SSL) fixture/lamp design, integration, and reliability, LED chip and package testing and reliability, fabrication, optical design, thermal management, and color conversion.

10. Throughout the course of my career, I have designed and transferred into manufacturing over 150 different LED-based lighting products, including LED lighting products designed to be installed in fixtures and in different lighting environments and applications. I have also designed and transferred into manufacturing dozens of different LED chips and packages for a variety of different applications with a particular focus on display applications and general lighting.

11. I am recognized as a leading expert in matters related to reliability for all types of LED technology and have consulted with numerous companies to help develop internal testing methods and reliability standards for evaluating their products.

12. I am currently the Chief Technology Officer at EB Designs & Technology. In that capacity, I am, among other things, responsible for the design

of solid-state lighting technologies for clients ranging from startups to Fortune 100 companies.

13. I also served as a member of the University of Florida's Department of Chemical Engineering Advisory Board for 25 years, from 1998 until 2022. During my tenure on this Advisory Board, I served as Chair for a total of 8 years. I also served on the Dean's Advisory board for the College of Engineering at the University of Florida from 2007-2009 and 2017-2022. I have been a Conference Chair for LED Measurement and Standards. I am also a member of numerous professional societies, including the International Society for Optics and Photonics (SPIE), Optica, the Society for Information Display (SID), the Materials Research Society (MRS), and the Illuminating Engineering Society (IES).

14. Inside the IES, I am a founding member of the Science Advisory Panel, which has oversight over all testing and technical committees and work groups inside the IES. I am also a full member of the Test Procedures Committee which develops test, measurement and reliability standards for LEDs and lighting fixtures. Inside the Test Procedures Committee, I serve as chair of the projections and reliability subcommittee which develops reliability standards for LED based lighting products including utilizing all forms of lighting technologies. I recently led the work group that revised TM-21 which is the internationally accepted standard for predicting reliability of LED packages. I also developed a new mathematical model

that, for the first time, allows prediction of the color shift of an LED package over its time. This model is the basis for a new IES standard known as TM-35, which predicts the rate of color shift for LED products over time.

15. I joined the IES in 2006 and have been a member of the Test Procedures Committee since that time. As a result, I have been an active participant in the development of testing standards related and have helped to formalize the terminology for solid state lighting since the beginnings of the industry. Additionally, I serve on the IES Color Committee and the IES Photobiology Committee.

16. I previously served as Chief Technology Officer at QuarkStar, LLC., from 2016 until 2023. QuarkStar is primarily a technology development company that is focused on new approaches to improving performance and efficiency of products that rely on LED light sources. In this role, I helped negotiate the company's first technology license to a European manufacturer of lighting fixtures. This technology has since be incorporated into one of their premium product lines. I also lead the efforts to transition products into manufacturing to produce fixtures for the Museum of Fine Arts, Houston (MFAH). These fixtures provide over 60% of the artificial lighting in a $500 million expansion.

17. Prior to my position at EB Designs & Technology, I served as the Director of Engineering at HeathCo, LLC. In that capacity, I was responsible for

advanced technology/product development related to solid-state lighting, sensors, notifications, and control products.

18. Prior to my position as Director of Engineering at HeathCo, I was at the Elec-Tech International Co., Ltd., where I held the positions of Chief Engineer, ETi Lighting Research Institute and VP of Research and Development, ETi Solid State Lighting. In my Elec-Tech capacities, my responsibilities included developing all technology and product roadmaps for markets in North America, China, Europe, and Japan. I designed and developed LEDs, LED packages and LED based lighting products for all of these markets.

19. Between 2008 and 2011, I was at Lighting Science Group Corporation (LSG), first as a product development manager, and my responsibilities included developing solid state lighting products, then as VP of Research, and my responsibilities included developing advanced LED models for product development and production control. In these roles, I was involved in the design and manufacture of numerous LED-based lighting fixtures and products. The products I helped launch included LSG's C2D (Curb to Door) products. These products were designed to be installed in outdoor locations including wall packs, parking lots, and streetlights. These fixtures, particularly the wall pack fixtures, were also suitable for installation in public transportation areas.

20. Between 2004 and 2008, I was at Toyoda Gosei North America, where I was a sales manager, and my responsibilities included managing and developing LED die and package sales accounts form the eastern region of North America. I was also tasked with providing technical support for the entire western hemisphere. The support I provided included design of LED packages and design of lighting fixtures and products that incorporated LED packages. Notable successes at Toyoda Gosei included expanding market niches and applications for LED based backlights for LCD displays. I provided significant technical and design support to large customers, including 3M, Global Lighting Technologies, Apple, Dell, and Hewlett Packard.

21. Between 2003 and 2004, I was at Beeman Lighting, where I was Director of Solid State Lighting Engineering, and my responsibilities included leading development of solid state lighting systems and materials.

22. Between 1998 and 2003, I was at Uniroyal Optoelectronics. Uniroyal Optoelectronics was a joint venture between Uniroyal Technology Corporation and Emcore Corporation which was initially focused on development and production of GaN-based and AlInGap-based LED chips. Later, Uniroyal Optoelectronics expanded their scope to include LED packages. At Uniroyal Optoelectronics, I held a number of positions including Team Leader for the Epitaxial Growth and Materials Characterization areas, Sr. Epi Scientist, Director of Intellectual Property, University

Relations and Government Contracts. My responsibilities included MOCVD hardware modification, epitaxial process development as well as design, development and testing of new LED chip structures for both AlInGaP and GaN-based material systems. I was also responsible for providing technical support and assistance to customers on topics related to use of LED chips, design of LED packages and design of LED based lighting products and systems. This support included both optical and thermal design of LED packages and LED lighting products. My work at Uniroyal included providing technical support and package design for Kopin which resulted in the development of full color micro displays that were used as electronic viewfinders for Kodak digital cameras.

23. I have also authored and presented more than a total of 30 publications, presentations, and seminars, and I am a named inventor on over 65 issued patents and more than 25 pending patents.

24. I earned a bachelor's degree in Chemical Engineering from Tulane University in 1989.

25. I earned a Ph.D. in Chemical Engineering from the University of Florida in 1997, where my graduate work focused on development of optoelectronic devices, including novel silicon based visible LEDs and sulfide based TFELD structures and zinc selenide blue LEDs. As a graduate student, I was also an active participant in the Phosphor Technology Center of Excellence (PTCOE). The

PTCOE was a large research consortium that was focused on technology development of display technology for electroluminescent (both alternating current and direct current) displays, field emission displays, and plasma displays.

26. In 1989 I worked for Shell Oil Corporation in Norco, LA. I was tasked with modeling heat exchanger performance for the crude oil distillation column in order to identify cost saving opportunities. I developed an improved model for determining the operating efficiency of heat exchange units that incorporated determined the economic impact on different operating conditions. The model was designed to be compatible with all major operating units on site and resulted in costs savings of over $20 million/year at the Norco Facility alone. My work was quickly adopted throughout the entire corporation and has resulted in sustained annual cost savings of approximately $500 million/year.

27. Based on the above education and experience, I believe that I have a detailed understanding of the state of the art during the relevant period, as well as a sound basis for opining how persons of ordinary skill in the art at that time would understand the claim terms and technical issues in this case. I believe that I would have this understanding regardless of which definition of a "person of ordinary skill in the art" is adopted by the Board. I meet Petitioner's proposed definition, which is "a Bachelors' degree in electrical engineering or a comparable field of study, plus approximately one or more years of professional experience with electronic and

optoelectronic system design", because I have a B.S. and a Ph.D. in Chemical Engineering as well as over 30 years of experience in LED design, a subfield of optoelectronics. As explained further in Section VI below, I have further experience in the design of LED packages and one year of practical experience in design of thermal management systems for LEDs.

28. The opinions stated in this declaration are based on my own personal knowledge and professional judgment; if called as a witness during any proceeding in this matter I am prepared to testify competently about them.

29. In forming my opinions, I have considered the materials discussed and cited herein, including the asserted patents, the prosecution histories of the patents, and the prior art references discussed herein, and any other references referred to or cited in this declaration.

III. TECHNOLOGY BACKGROUND

30. The technical fields of the '842 Patent are LED package design and heat transfer for LED backlights. *See* Ex. 1001, 1:7-11 ("The present invention generally relates to the packaging of light-emitting device backlights. In particular, the present invention relates to a light-emitting device backlight package which requires minimal space while producing maximum luminosity."); *see also* Ex. 1001, 1:61-2:11 and 2:29–40 (discussing heat dissipation). Like all electronic components, LEDs generate heat during operation, however unlike most electronic components,

LEDs are uniquely sensitive to heat. More specifically, the operating temperature of LEDs has a significant effect on the operation of LEDs. LED efficiency (light output) decreases with increasing temperature and LED lifetime also decreases with increasing temperature. As the primary impetus for adoption of LED technology is the combination of energy savings over other lighting technologies and long lifetime, thermal management is of particular importance for design and operation of LED devices.

A. LED Packaging

31. The L-shaped structure of the '842 Patent is what is referred to as a "lead frame". Its external surface is used to attach the LED package to a circuit board using solder. Lead frames in the industry are typically made of metal. In all my experience before this case, I have never encountered a lead frame that was made of resin or that included resin. Similarly, I have never heard the idea that a lead frame would include resin.

32. Lead frames and LED packages prior to the '842 Patent all extended beyond the edge of the waveguide. The images below show a typical surface mount LED for use with waveguides from the mid-1990s. Ex. 2013 at 4. This LED package was nominally "C" shaped, with the LED chip mounted on one side and directed the light from the edge of the LED package towards the waveguide. The entire body of

the LED package extended past the waveguide and no part overlapped the waveguide itself:

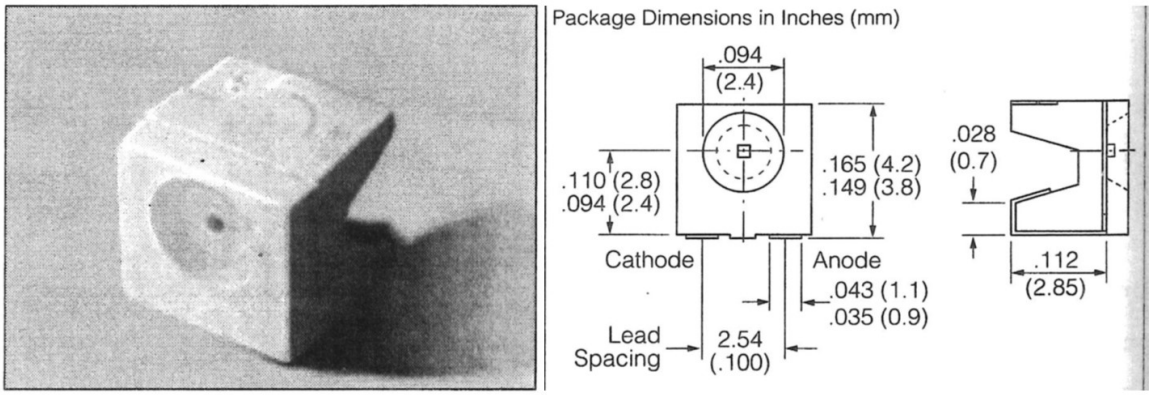

Ex. 2013 at 30.

33. This general format of package remained in use throughout the 1990s and into the mid 2000-time frame.

34. The images below are for a Nichia NSCW215 LED which was released ca. 2003 and was designed for use in small format LCD backlight applications. *See* Ex. 2012 at 10. The vertical dimensions of the package have been reduced compared to the Siemens LED package shown above, but the package is based on similar design principles. The LED emits light to the side and no portion of the LED package overlaps the waveguide. I am aware that this LED was still in production and in wide scale use at least as late as 2008.

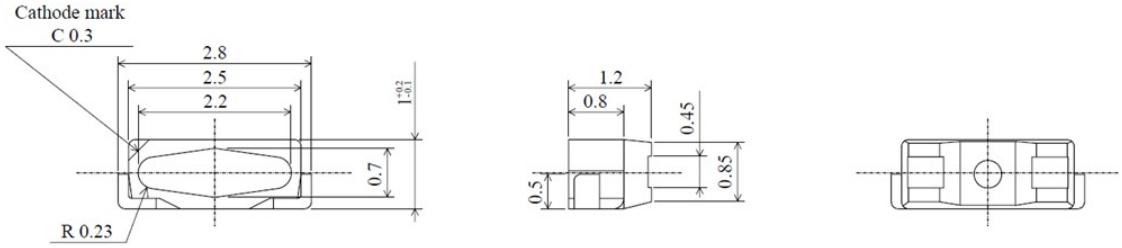

Id. at 10.

35. Throughout at least the 2000-time frame, market forces were pressuring the industry to create smaller form factors for LED backlights. This was driven by, for example, the desire to create thinner bezels on devices. The pressures posed significant engineering challenges, such as designing LED packages for backlights that achieved the desired form factor without losing the requirements of an LED system, such as thermal management and efficiency. Many in the field were searching for solutions, including a company called Nichia.

36. At the priority date of the '842 Patent, Nichia was, and still is, the largest LED company in the world, yet they did not find it obvious to design an LED package that allowed portions of the LED package structure to overlap the waveguide, thereby allowing a reduction in the longitudinal dimension of a backlit display as in the '842 Patent.

B. Heat Management in LED Systems

37. The major incentive for using LEDs as a light source is their energy efficiency compared to other lighting technologies. However, the efficiency of an LED is a function of temperature and decreases with increasing temperature. This behavior is well known to a POSITA and is commonly included in the specification sheets of LEDs. The figure below is from the specification for a Nichia NSCW215 LED which is approximately contemporaneous with the '842 Patent:

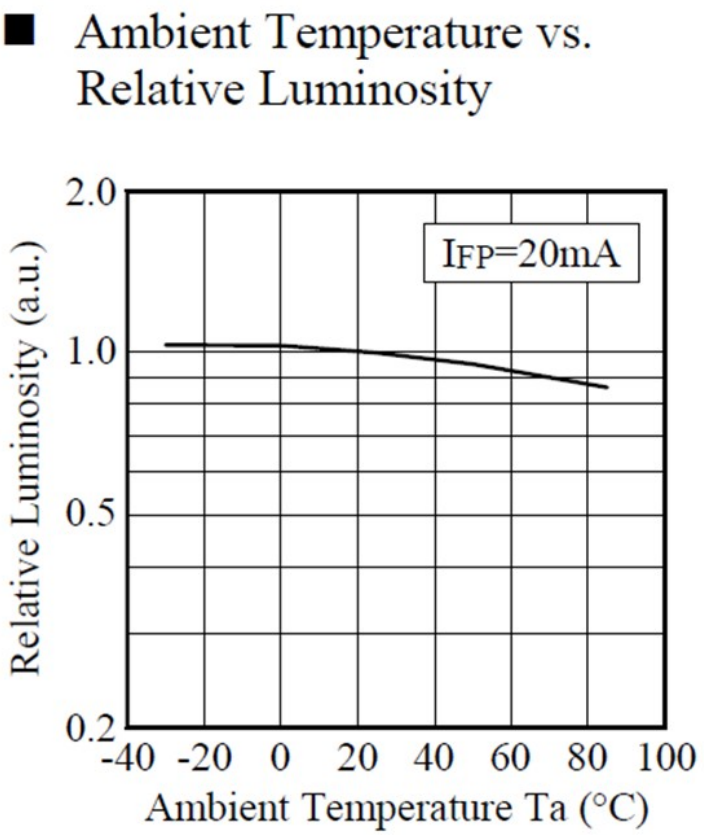

Ex. 2012 at 8.

38. A secondary benefit of LEDs is an expectation of a long lifetime. However, it is well known that the lifetime of an LED is heavily dependent on both the operating temperature of the LED chip which is in turn impacted by both the details of LED package construction, the thermal management system surrounding the LED package when installed, and the operating conditions. *See, e.g.*, Ex. 2011 at 124.

39. Dissipation of heat is the transfer of heat generated by the LEDs to the ambient environment. Heat transfer occurs via three mechanisms: conduction,

convection, and radiation. *See, e.g.,* Ex. 2016, Fig. 1.1 (depicting the three methods) (reproduced below).

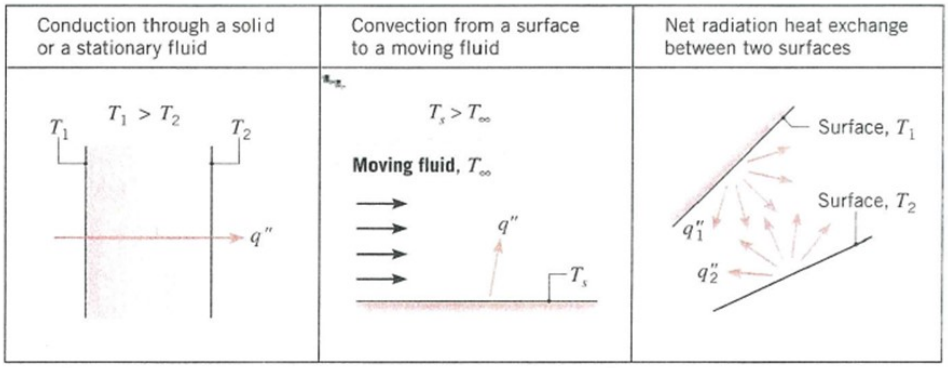

40. Conductive heat transfer is the transportation of heat via collisions between adjacent atoms or molecules and the movement of electrons through a material.

41. Convective heat transfer is the transport of heat by conduction to a fluid and subsequent movement of a fluid.

42. Radiative heat transfer is the transport of heat via electromagnetic radiation.

43. Conductive heat transfer is calculated using Fourier's Law. The one-dimensional form of Fourier's Law is given as:

$$q_{cond} = -kA\frac{\Delta T}{x}$$

where:

q_{cond} = heat transfer via conduction [W]

A = cross sectional area over which conduction occurs [m^2]

k = thermal conductivity [W/m K]

ΔT = temperature difference [K or °C]

A = area over which conduction occurs [m^2]

x = thickness of material [m]

See Ex. 2015 at Ch. 17, p. 252.

44. The equation governing convective heat transfer has a similar form:

$$q_{conv} = hA(T_S - T_m)$$

where:

q_{conv} = heat transfer via conv [W]

A = area over which convection occurs [m^2]

h = convective heat transfer coefficient [W/m^2 K]

T_S = surface temperature [K or °C]

T_m = ambient fluid temperature [K or °C]

See Ex. 2015 at 315.

45. While the equation for calculating convective heat transfer is simple in appearance, there is an underlying complexity which has resulted in heat transfer becoming a specialized topic relegated to the fields of mechanical and chemical engineering. The convective heat transfer coefficient is calculated from a dimensionless parameter called the Nusselt number which is related to the ratio of momentum diffusion and heat diffusion in a liquid. Formally it is defined as:

$$Nu = \frac{hL}{k}$$

where:

Nu = Nusselt number [dimensionless]

h = convective heat transfer coefficient [W/m^2 K]

k = thermal conductivity of fluid [W/m K]

L = characteristic length [m]

See Ex. 2015 at 339.

46. Calculation of the Nusselt number depends on a number of factors and considerations and is highly dependent on the geometry of the system. Many additional factors must be considered and are incorporated into dimensionless numbers that can be used in equations to calculate the Nusselt number. These dimensionless numbers include the Grashoff number (Gr), which relates to the ratio between buoyant forces and viscous forces, the Rayleigh number (Ra), which characterizes buoyancy driven flows, the Prandtl number (Pr) which is the ratio of viscosity to thermal conductivity in a fluid, and the Reynolds number (Re) which can be broadly thought of as characterizing fluid flow as laminar or turbulent. *See* Ex. 2015 at 339-45.

47. Radiative heat transfer can be calculated using the Stefan-Boltzmann equation:

$$q_{rad} = \sigma AF(T_S^4 - T_a^4)$$

where:

q_{rad} = heat transferred by radiation [W]

σ = Stefan-Boltzmann constant = 5.67037×10^{-8} W/m^2 K^4

A = area [m^2]

F = view factor [dimensionless]

T_S = absolute temperature of surface [K]

T_a = absolute temperature of ambient [K]

See Ex. 2015 at 434.

48. Even this cursory review of the three fundamental heat transfer mechanisms reveals that that at a high level they all scale with area. Assuming all other factors are equal, a POSITA would expect that increasing area would increase heat transfer. Importantly, volume does not appear as a variable in any of the equations for the different modes of heat transfer.

49. This stands in stark contrast to Dr. Baker's testimony during deposition when he stated that for dissipating heat that volume is important. Ex. 2024 at 67:7-8 ("For dissipating heat, volume is important."). This statement strongly suggests that Dr. Baker lacks any significant experience in the field of thermal design and his opinions on the subject should be given little or no weight. Additionally, Dr. Baker analogized convective and radiative heat transfer, which are distinct, fundamental principles. Ex. 2024 at 67:7-8 ("For dissipating heat, volume is important), 35:3-6

("Q[;] And are you familiar with convective heat transfer? A[:] Yeah, that's kind of what I mean by radiative, is convection, yeah.").

50. Dr. Baker further admitted in his deposition that he had minimal, if any, experience designing heatsinks, which is a crucial part of LED package design, as discussed above. *See* Ex. 2024 at 26:23–25 ("Q[:] And have you ever designed a heat sink for an LED package?" "A[:] I don't know. Maybe if I did, it was crude."), 27:10–11 ("[W]hen I have something that's dissipating a lot of power I just buy the heat sink."). This is a critical admission as the heat sink in an LED package is integral and cannot be purchased and added to it after the fact. As such, it is a de facto admission by Dr. Baker that he lacks the requisite knowledge and expertise required to opine on matters related to design of LED packages particularly those dealing with thermal management and heat dissipation.

IV. THE '842 PATENT

51. The '842 Patent relates to an LED package for backlight applications. "The present invention generally relates to the packaging of light-emitting device backlights. In particular, the present invention relates to a light-emitting device backlight package which requires minimal space while producing maximum luminosity." Ex. 1001, 1:7-11.

52. The '842 Patent additionally teaches that for optical efficiency reasons, it is desirable for LED packages to emit light in a direction parallel to the plane of

the light guide plate (LGP). Ex. 1001, 1:51-60 ("FIG. 2 illustrates another example of a conventional LED backlight package. This example seeks to solve the above problem of energy losses and low luminosity by placing LED modules 20 on the ends of an LGP 21. In this example, the light rays 22 emitted by the LED modules 20 travel directly along the length of the LGP 21. Since light rays 22 undergo no reflections, light transmission is improved. The result is greatly reduced energy losses, more energy efficiency and enhanced luminosity along the length of the LGP 21.").

53. The '842 Patent also teaches that heat dissipation means are typically disposed beneath the PCB on which an LED is mounted to help dissipate heat generated by the LED package, but that for conventional LED packages this results in an undesirable increase longitudinal direction or width of the display. Ex. 1001, 1:63-2:5 ("For conventional LED back 23 extend from the end of the LGP 21 in the longitudinal direction. This positioning is awkward and inefficient, causing critical space to be occupied by what is essentially a maintenance device, instead of using that space to contribute lights, heat-dissipating plates 23 are typically placed underneath of PCB 24 to dissipate the heat generated by the electronics away from the delicate circuitry. When this is 23 extend from the end of the LGP 21 in the longitudinal direction. This positioning is awkward and inefficient, causing critical space to be occupied by what is essentially a maintenance device, instead of using

that space to contribute to the primary goal of achieving efficient light production."). This description in the '842 Patent is consistent with a POSITA's understanding that it is generally desirable to have a narrow bezel or border region around a display.

54. The '842 Patent summarizes that it would be desirable to have an LED package that emits light in a longitudinal direction into a light guide plate while minimizing the space required for packaging and heat dissipation. Ex. 1001, 2:12-17.

55. The '842 Patent achieves these goals via an LED package that incorporates a novel fastener or lead frame design in which an LED chip is attached to one surface of the fastener and the second surface of the fastener is used for attaching the LED package to the PCB, and the first surface and the second surface form an L-shape. The design of the fastener is such that the light from the LED chip is emitted in a longitudinal direction with respect to the light guide plate and heat generated by the LED chip can be efficiently dissipated through the PCB via heat dissipating plates mounted on the PCB opposite the LED package. Ex. 1001, 2:29-40 ("At least one of the above and other features and aspects of the present invention may be realized by providing a light emitting device backlight package having a fastener of a novel shape, which provides a first surface to which a chip and light emitting device module attach, while also providing a second surface for attachment of a second fastener, or a PCB. In this way, the light emitting device emits light

longitudinally along a light guiding plate, thus optimizing the travel path of the emitted light, while maintaining a compact shape by placing the PCB and heat dissipating plates away from the longitudinal axis of the light guiding plate.").

V. SUMMARY OF THE ALLEGED PRIOR ART

A. Overview of Uekusa

56. Uekusa teaches a light emitting diode for side luminescence. Ex. 1008, 1:7-10. More specifically, Uekusa teaches an improvement over prior art T-shaped LEDs that were mounted in holes through PCBs. Ex. 1008, 2:16-24 ("However, because the aforementioned T-shaped light emitting diode 15 has such a structure that the protrusion 18 is formed on the front surface of the upright section 17, there is a problem that a center of gravity of the light emitting diode offsets forwardly and therefore an unbalance for inclining the light emitting diode generates when the base sections 16a and 16b are mounted on the peripheral edge of the hole 9 provided in the motherboard 8.").

57. Uekusa seeks to resolve the issues with the T-shaped design by adding an extension perpendicular to the cross of the T to provide three points of contact, thus increasing stability. Ex. 1008, 2:26-31 ("It is, therefore, a first object of the present invention to provide a light emitting diode in which the light emitting diode can be supported with at least three points when it is mounted on a peripheral edge

of a hole in a motherboard to carry out stability of a posture of the light emitting diode.").

58. I note that the primary material of Uekusa's structure is a glass epoxy material or epoxy material. Ex. 1008, 1:17-25 ("The light emitting diode 1 has a structure in which a pair of substrate electrodes 3 and 4 is patterned on an upper surface of a glass epoxy substrate 2, a light emitting diode element 5 is fixed on one electrode 3 by means of a conductive adhesive (not shown) and an upper electrode 5a of the light emitting diode element 5 and the other electrode 4 are connected by a bonding wire 6, and the light emitting diode element 5 is sealed by a sealing body 7 formed from a transparent epoxy resin."). This glass epoxy material or epoxy material is formed into the structure shown in Uekusa and hardens into a hard surface. The glass epoxy material or epoxy material would form a hard surface prior to Uekusa's structure being inserted into the hole in the motherboard. The epoxy itself does not stick, fasten, or attach the structure to the motherboard. Uekusa's epoxy structure serves only to support the fastener by touching the motherboard (physical interference) and is incapable of being attached, which I discuss in depth below. *See* §IX.A, *infra*.

59. This is important to recognize as the top surface of the "T" surface of Uekusa's LED is an exposed surface of glass epoxy material. A POSITA understood that such material is an exceptionally poor conductor of heat and is unsuitable for

heat dissipation, and this is noted explicitly in other of the applied references. *See, e.g.,* Ex. 1005, 1:57–64 ("As described above, the epoxy resin has low heat conductivity").

B. Overview of Isoda

60. Isoda teaches an improvement over prior art LEDs that utilized resin-based substrates which limited heat transfer causing degradation of performance. Ex. 1005, 1:27-36 ("However, the substrate 2 made of resin such as epoxy resin has a very low heat conductivity which is about one-hundredth of that of copper. Therefore, heat emitted from the LED 3 scarcely transmitted to the print Substrate 6. Consequently, when a high current is applied to the LED in order to produce high brightness, the emitted heat becomes high temperature, which causes junctions in the LED to degrade, and the sealing member 5 to discolor which decreases the transparency of the member. Thus, the quality of the LED device largely reduces.").

61. Isoda seeks to resolve these problems by incorporating large metal structures in the body of the LED package and directly mounting the LED chip to these metal members. Ex. 1005, 2:50-63 ("The present invention further provides a method for manufacturing a light emitting device comprising the steps of combining of conductive members with insulating members such as an insulation resin to form a base member assembly, forming a circuit substrate assembly having a plurality of openings and circuit patterns, securing the circuit substrate assembly to the base

member assembly, mounting each light emitting diode on the conductive member exposed in each opening of the circuit substrate assembly, connecting each light emitting diode with each circuit pattern by at least a wire, sealing the light emitting diodes and the wires on the circuit substrate assembly with a sealing member such as a transparent resin, and separating each independent light emitting device by dicing.").

62. Isoda further envisions extensions of these metal members extending through circuit boards on which the LED packages are mounted so that cooling members (heat sinks) may be attached directly to the LED packages. Ex. 1005, 2:42-49 ("The print substrate has a light emitting diode driving pattern connected to the conductive member for applying the current to the light emitting diode, and a heat radiation pattern is formed on an inside wall of the opening and on the underside of the print substrate. A cooling member is secured to the underside of the print substrate for cooling the light emitting diode.").

63. This can be seen in the annotated version of Fig. 4 of Isoda, reproduced below in which the LED chip 33 is highlighted in blue, the heat conductive members 21 are highlighted in red, the print substrate (circuit board) 40 highlighted in tan, and the cooling member (heat sink) 41 is highlighted in pink.

FIG. 4

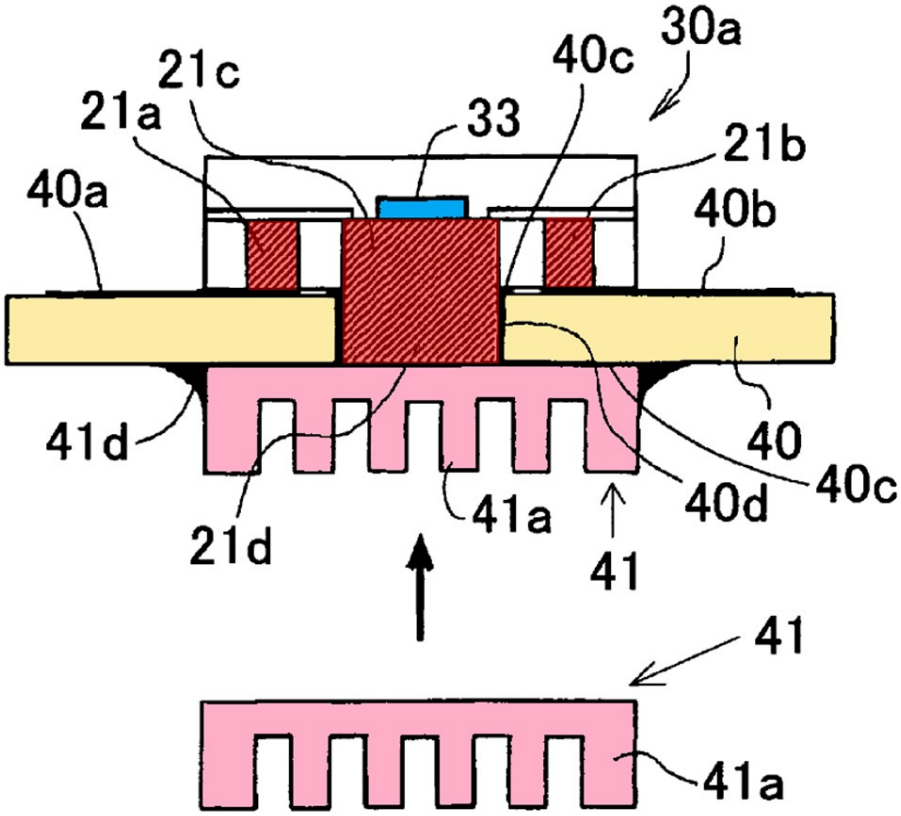

64. Isoda thus teaches directly connecting a heatsink to an LED chip via a heat conductive material, which requires a hole that protrudes through the circuit board.

C. Overview of Kurokawa

65. Kurokawa teaches an arrangement of LED packages mounted on a printed circuit board that is bent to enable light from the LED packages to efficiently inject light into a light guide plate. Ex. 1004, ¶[0009] ("[T]he invention according

to claim 1 is a lighting device for a vehicle display unit provided with a light guide plate (5), light emitting diodes (8) arranged opposite a side edge (5a) of the light guide plate (5), and a printed wiring board (7) on which the light emitting diodes (8) are mounted, light incident from the light emitting diodes (8) on the side edge (5a) of the light guide plate (5) exiting the surface of the light guide plate (5) as illuminating light, the lighting device for a vehicle display unit characterized in that the printed wiring board (7) is a metal-based wiring board based on a metal plate (71), and the printed wiring board (7) is bent so as to extend from a portion opposite the side edge (5a) of the light guide plate (5).").

66. It is noted that the LED packages of Kurokawa are typical surface emitting LED packages that emit light in a direction perpendicular to the plane of the circuit board on which they are mounted. This is evidenced in the reproduction of Fig. 2 of Kurokawa below in which I have highlighted the LED packages in blue.

[Fig. 2]

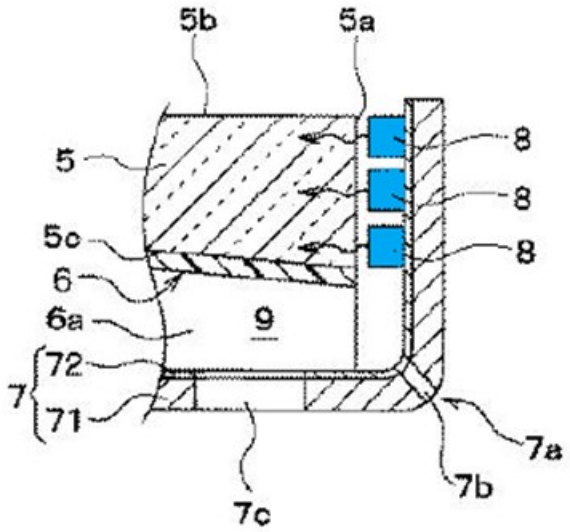

67. Further, Kurokawa explicitly states this fact. Ex. 1004, ¶[0043] ("The light emitting diodes 8 are surface mounted on the portion of the printed wiring board 7 that faces the side edge 5a of the light guide plate 5. The light emitting diodes 8 are vertical light emitting diodes that emit light in the direction perpendicular to the mounting surface on the printed wiring board 7.").

D. Overview of AAPA

68. The '842 Patent discusses that conventionally, heat-dissipating plates were placed underneath PCBs opposite the location of the LED packages. Ex. 1001, 1:63-66 ("For conventional LED back lights, heat-dissipating plates 23 are typically placed under neath of PCB 24 to dissipate the heat generated by the electronics away from the delicate circuitry.").

69. However, the '842 Patent pointed out that for surface mount LEDs, this resulted in heat-dissipating plates (heat sinks) extending in the longitudinal direction, which increased the required width of displays. Ex. 1001, 1:66-2:5 ("When this is done for the example of FIG. 2, the heat-dissipating plates 23 extend from the end of the LGP 21 in the longitudinal direction. This positioning is awkward and inefficient, causing critical space to be occupied by what is essentially a maintenance device, instead of using that space to contribute to the primary goal of achieving efficient light production.").

70. AAPA teaches that prior art LED packages were mounted beyond the periphery of the light guide panel. In other words, AAPA resulted in an undesirable increase in the bezel width for displays.

E. Analogous Art

71. The field of endeavor of the '842 Patent is plainly LED package design and, more specifically, LED package design for backlight applications. Within the realm of backlight applications, the '842 Patent is even more specific about optical designs in which the LEDs emit light in a direction parallel to the circuit board on which they are mounted. These criteria provide a fair measure of relevant prior art, namely LED package construction and side emission LED packages.

72. Cathode Ray Tube (CRT) technology was fundamentally different from the use of LEDs and is not analogous art. CRTs generate light using a fundamentally

different technology—essentially using high energy electron beams in a vacuum to excite various colored phosphors coating a screen. CRT displays were largely rendered obsolete by the advent of liquid crystal displays, which use liquid crystals to filter/modulate the light emitted by a flourescent and later LED backlights. Any use of LEDs in combination with a CRT display would not have been related to the display itself (e.g., indicating power on). For example, LEDs could be for signaling, which does not require the same power levels, form factor, or efficiency considerations necessary for use in an LED-based display—in fact, these are the very issues that had to be overcome before LED-based displays became a viable alternative to CRTs. Using LEDs for signaling is drastically different from using them as a backlight for a display.

73. A signal LED emits light directly to a viewer without a need for a change in direction or intensity. In contrast, LEDs used in backlights for displays must couple their light into a waveguide panel which homogenizes or mixes the light so that it is uniform over a larger area. Features on one surface of the waveguide or a textured film is then used to extract the light in a direction perpendicular to the plane of the waveguide so that the light is emitter towards to viewing direction. This requires that after emission from the LED package, light make a 90° turn towards the viewing direction. At a minimum, a backlight for a display must be able to

convert one or more point sources of light into a uniform ***planar*** light source. Ex. 2017 at 76.

74. Other flat panel display technologies are not analogous as they do not face the same optical design constraints, nor do they face the same challenges with respect to heat dissipation. It is important to note that Field Emission Displays, Electroluminescent Displays, Vacuum Fluorescent Displays, and Plasma Displays all create light and heat in a distributed manner. They do not utilize wave guide structures, nor do they need localized heat sink structures.

VI. THE LEVEL OF ORDINARY SKILL IN THE ART

75. I have been informed that my analysis of the Challenged Claims should be viewed from the perspective of a person of ordinary skill in the art (POSITA) as the earliest claimed priority date, which I have been informed is December 1, 2004.

76. I understand that a POSITA is a hypothetical person presumed to have known the relevant art at the time of the invention. I have been informed that in determining the level of ordinary skill in the art the following factors may be considered none of which is predominant: (1) type of problems encountered in the art; (2) prior art solutions to those problems; (3) rapidity with which innovations are made; (4) sophistication of the technology; and (5) educational level of active workers in the field.

77. I understand that Dr. Baker has opined that a POSITA "would have had a Bachelors' degree in electrical engineering or a comparable field of study, plus approximately one or more years of professional experience with electronic and optoelectronic system design. Additional graduate education could substitute for professional experience, and significant experience in the field could substitute for formal education." Ex. 1002, ¶46.

78. I disagree with Dr. Baker's opinion as to the level of skill in the art for the purposes of this IPR proceeding. To begin with, the field of optoelectronics is overly broad and expansive and encompasses solar cells, optical fiber, and any application of LEDs, not just the design of LED packages. As an example, the germanium photodiodes are within the field of optoelectronics, as are silicon photovoltaics. An individual with even a decade of experience working with either or both of those technologies would be unskilled and unsuited to design an LED package, much less an LED package for a specialized application such as a backlight. Similarly, neither application is likely to equip an individual with the skills and knowledge necessary to deal with the complicated issues associated with heat dissipation and thermal management either at the LED package level or at the system level.

79. Similarly, a decade of experience in designing power supplies for compressors in commercial refrigerators would clearly fall within the field of

electronic design, but such an individual could not be expected to have any experience with even use of LEDs, much design of LED packages and thermal management at the LED package or system level.

80. I considered (1) type of problems encountered in the art: problems in designing LED packages, particularly in the context of backlights for displays are drastically different from problems with circuit design. The main problem in designing LED packages was heat management, (a problem compounded by form factor), as heat management affected other problems, including longevity, brightness, power delivery, optical efficiency. Addressing these problems required the physical designs, including thermal management systems. An engineer does not face these problems when using pre-built LED packages in a circuit. As such, heat management and form factor design would not be skills that would be taught in electrical engineering programs. Further, and as noted above, the fields of electronics and optoelectronics are simply too broad to acquire an understanding of these problems. Understanding these problems and their solutions requires experience designing LED packaging, especially in the context of backlights for displays. Designing LEDs for displays presented challenges that were not present in other applications of LEDs, such as signaling and detecting, or in other display technologies, such as cathode ray tubes (CRT). Experience with the optical design and thermal management requirements in common LED applications, like signaling,

are inadequate for the requirements for displays. In particular, display LEDs are designed to achieve a coupling efficiency of 95% into a waveguide. *See, e.g.,* Ex. 2017 at 76. The high power levels of LEDs used in displays relative to their size involve fundamentally different thermal management in comparison to other applications of LEDs, such as signaling and detecting, and for CRT. Poor thermal management noticeably impacted the resulting visible light and radically affected the lifespan of the LEDs, which was crucial for displays. Just one example of the problems I encountered was managing the heat introduced to the system through soldering, as LEDs packages must be soldered to the larger circuit—if the thermal conductivity of the package is too high, the heat introduced during soldering would destroy the LED and if the thermal conductivity is too low, the heat generated by the LED during operation would not be dissipated properly, leading to degradation or destruction of the LED (and may even melt the solder holding the package to the board, causing the light from the LEDs to be misdirected, called "tombstoning" in the field). Accordingly, selecting material with specific thermal properties was critical in LED package design.

81. <u>I considered (2) prior art solutions to those problems</u>: the prior art, such as the references offered by Petitioner illustrate that solutions included attempting to design physical modifications to LED packages and specific heat management solutions. *See, e.g.*, Ex. 1008; Ex. 1004.

82. I considered (3) rapidity with which innovations are made: lead frames and LED packages prior to the '842 Patent all extended beyond the edge of the waveguide. The images below show a typical surface mount LED for use with waveguides from the mid-1990s that remained in use until the mid 2000-time frame. *See* §III.A, *supra*; Ex. 2013 at 30.

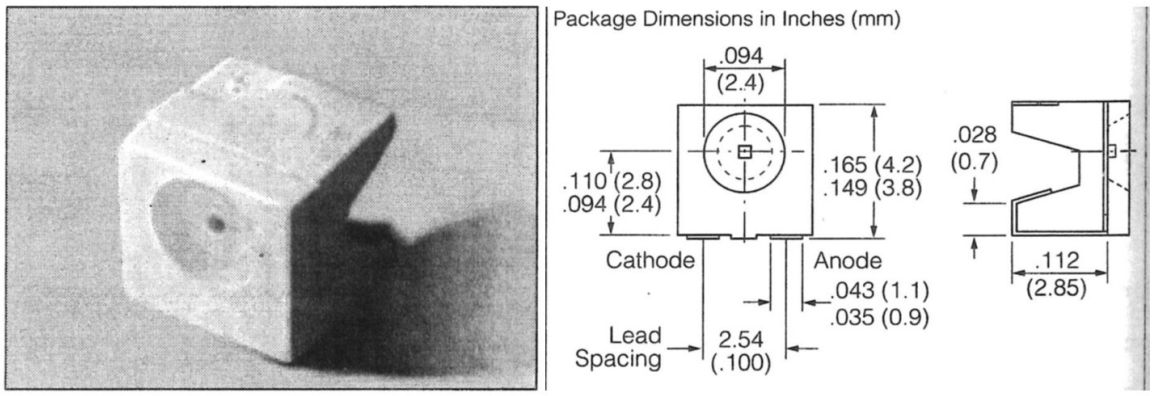

Additionally, a POSTIA would have known that LED packaging techniques were generally slow-changing in LED technology. As explained in the '842 Patent and exemplified in Isoda's 2003 publication, heatsinks (if used) at the time were generally placed opposite the LED chip and/or in direct contact with the LED chip through a thermally conductive member. Ex. 1001 at Fig. 2; §V.B, *supra*.

83. I considered (4) sophistication of the technology: LED package design, particularly in the context of backlights for displays, is a sophisticated technology that requires significant experience with complex subjects due, in large part, to the thermal management required to efficiently operate an LED, the power required to

use an LED as a backlight (which increased the heat generated by the LED), and the form factor constraints that existed in displays.

84. I considered (5) educational level of active workers in the field: those designing LED packages, particularly in the context of backlights for displays, had a degree in mechanical engineering, chemical engineering, or related field.

85. After considering factors (1)-(5) above, I disagree with the part of Dr. Baker's opinion in paragraph 46 of his report that merely requires a POSITA to have, beyond a bachelor's degree in electrical engineering, "approximately one or more years of professional experience with electronic and optoelectronic system design." In my opinion, both "electronic… system design" and "optoelectronic system design" are too broad, and they would not necessarily give person a grasp of the problems or technology specific to LED packages or thermal management. The mere use of pre-packaged LEDs in an electronic or optoelectronic system does not provide an understanding of how to design an LED package. Neither electronic nor optoelectronic system design necessarily provides an understanding of thermal management.

86. Based on my decades of experience in the LED industry, which includes design of LED packages and thermal management systems for LEDs as well as training individuals to perform these tasks, **a person of ordinary skill in the art would have at least a Bachelor's degree in a field of engineering or physics**

and at least one year of practical experience in design of LED packages and one year of practical experience in design of thermal management systems for LEDs. Additional graduate education provided it included relevant semiconductor manufacturing or flat panel display technology could reduce but not eliminate the time requirement for professional experience.

87. Through my education and work experience during the relevant timeframe, I believe myself to have at least ordinary skill in the art. I am also familiar with the knowledge and capabilities of one of skill in the art as of 2004.

A. Dr. Baker is Not a POSITA for the '842 Patent

88. It is my opinion that Dr. Baker is not a POSITA for the '842 Patent. His experience indicates that he is an exceptional circuits expert but he does not have experience designing physical LED packages, much less in the context of backlights for displays, nor does he have experience designing thermal management systems for such packages. For example, and as discussed below, Dr. Baker used prepackaged LEDs but did not design LED packages; does not experience in thermal management; does not have relevant experience in LED package design, much less around 2004; and did not use LEDs for display applications.

89. Dr. Baker's CV indicated to me that he was unfamiliar with LED package design, particularly in the context of backlights for displays, and his testimony confirmed it. For example, he was not familiar with JEDEC reliability test

for LEDs. Ex. 2024, 30:21-23. When asked what experience he had designing LED packages, Petitioner's expert responded that he "worked on the design of detectors. . . . [and] would design light sources for characterizing the detectors." *Id.*, 15:20-24. When asked what experience he had around 2004, he explained work he did over two decades prior to the relevant time frame. *Id*. at 16:7–18. The work he described was not on packaging LEDs for the backlight of a display but was using LEDs for signaling in conjunction with photosensors that were placed adjacent to a CRT display, and is not relevant to the field of the '842 Patent. *Id*; *see* §V.E, *supra* (discussing CRTs). He incorrectly described convective heat transfer when referring to radiative heat transfer, and seemingly equated the two. Ex. 2024, 34:14-35:6. He was not familiar with Fourier's law for calculating thermal conductivity. *Id.*, 36:7-9. He described a lack of experience designing heat sinks, stating that he would just buy a heatsink as needed. *Id.*, 27:4-21. With respect to experience working at Cirque, he "didn't work on the actual mechanical design of the LED package." *Id.*, 24:17-21. In my opinion, these are some basic things in the design of LED packages that a POSITA would be familiar with. More specifically, I reviewed Cirque products from 2013 using the Wayback Machine and their point of sale product was an optically clear capacitive touch panel that could be placed over an LCD display. *See* Ex. 2010. Therefore, Dr. Baker does not have experience designing LED packages and does not qualify as a POSITA for the '842 Patent.

90. After reviewing Dr. Baker's CV (Ex. 1021), and in light of his testimony, it is my opinion that Dr. Baker is not qualified as a POSITA for the '842 Patent because he is not familiar with the design of any LED packages, much less in the context of backlights for a display, and because he lacks experience with thermal management.

VII. APPLICABLE LEGAL STANDARDS

I am not a lawyer and offer no legal opinions. My analysis and opinions are based on my expertise in this technical field and on the instruction that counsel has given me for the legal standards outlined in the rest of this section. These principles are summarized below.

A. Burden of Proof

91. I understand that the petitioner must prove invalidity of a patent claim by a preponderance of the evidence, that is, the evidence must be sufficient to show that a fact or legal conclusion is more likely than not.

B. Date of Invention

92. I have been asked to use the date of the filing of the earliest application to which priority is claimed (i.e., December 1, 2004) as the date of invention for purposes of my analysis.

C. Anticipation

93. I understand that a claim may be anticipated if a prior art disclosure teaches each and every element required by the claim, either expressly or inherently.

The identical invention must be shown in as complete detail as is contained in the claim. When a claim covers several structures or compositions, either generically or as alternatives, the claim is deemed anticipated if any of the structures or compositions within the scope of the claim is known in the prior art.

94. I understand that, once the claims of a patent have been properly construed, the next step in determining anticipation of a patent claim requires a comparison of the properly construed claim language to the prior art on a limitation-by-limitation basis.

D. Obviousness

95. I understand that even if a patent claim is not anticipated, it may still be invalid if the differences between the claimed subject matter and the prior art are such that the subject matter as a whole would have been obvious at the time the invention was made to a person of ordinary skill in the pertinent art.

96. I also understand that a patent may be rendered obvious based on an alleged prior art reference or a combination of such references plus what a person of ordinary skill in the art would understand based on his or her knowledge and the references. It is also my understanding that in assessing the obviousness of claimed subject matter one should evaluate obviousness over the prior art from the perspective of one of ordinary skill in the art at the time the invention was made (and not from the perspective of either a layman or a genius in that art).

97. I understand that a patent claim composed of several elements is not proved obvious merely by demonstrating that each of its elements was known in the prior art. There must be a reason for combining the elements in the manner claimed. That is, there must be a showing that a person of ordinary skill in the art at the time of the invention would have thought of either combining two or more references or modifying a reference to achieve the claimed invention.

98. I understand that an obviousness determination includes the consideration of the following factors: (1) the scope and content of the prior art, (2) the differences between the prior art and the claims at issue, (3) the level of ordinary skill in the art, and (4) any secondary indicia of non-obviousness (*e.g.*, "secondary considerations" such as commercial success in the marketplace of the claimed invention), to the extent that they exist. I understand that the following are examples of approaches and rationales that may be considered:

- Combining prior art elements according to known methods to yield predictable results;
- Simple substitution of one known element for another to obtain predictable results;
- Use of a known technique to improve similar devices (methods, or products) in the same way;

- Applying a known technique to a known device (method or product) ready for improvement to yield predictable results;
- Applying a technique or approach that would have been obvious to try (choosing from a finite number of identified, predictable solutions, with a reasonable expectation of success);
- Known work in one field of endeavor may prompt variations of it for use in either the same field or a different one based on design incentives or other market forces if the variations would have been predictable to a person having ordinary skill in the art; and
- Some teaching, suggestion, or motivation in the prior art that would have led one of ordinary skill to modify the prior art reference or to combine prior art reference teachings to arrive at the claimed invention.

99. I understand that the burden is on the petitioner to explain how an invention is obvious if one of ordinary skill in the art, facing a wide range of needs created by developments in the field, would have seen an obvious benefit to the solutions tried by the applicant. I further understand when there is a design need or market pressure to solve a problem and there are a finite number of identified, predictable solutions, it may be obvious to a person of ordinary skill to try the known

options. If a technique has been used to improve one device, and a person of ordinary skill in the art would recognize that it would improve similar devices in the same way, using the technique would have been obvious.

100. I understand that the burden is on the petitioner to explain how specific references could be combined, which combinations of elements in specific references would yield a predictable result, and how any specific combination would operate or read on the claims. I further understand that the petitioner cannot rely on conclusory statements but must instead provide a reasoned explanation supported by evidence. I also understand that obviousness does not exist where the prior art discourages or teaches away from the claimed invention. I also understand that even if a reference does not teach away, its statements regarding preferences are relevant to a finding whether a person skilled in the art would be motivated to combine that reference with another reference.

101. I also understand that one of ordinary skill in the art must have a reasonable expectation of success in combining or modifying prior art references.

102. I also understand that all elements of a claim must be considered in an obviousness analysis.

103. I understand that it is impermissible to use hindsight to arrive at the claimed invention. My understanding is that the inventor's own path never leads to a conclusion of obviousness. I also understand that, when assessing whether there

was a motivation to combine references to teach a claim element, defining the problem in terms of its solution reveals improper hindsight.

E. Claim Construction

104. I understand that claims are construed from the perspective of a person of ordinary skill as of the effective filing date of the patent application. A "person of ordinary skill in the art" is a hypothetical person who is presumed to have known the relevant art at the time of the invention.

105. I understand that persons of ordinary skill in the art are deemed to read the claims in the context of the entire patent, including the specification and prosecution history.

106. I understand that the claims define the invention and the terms used in the claims are generally given their plain and ordinary meanings they would have to a person of ordinary skill in the art at the time of the effective filing date of the application. The context of a claim can be particularly helpful, and other claims may inform the meaning of a term in a particular claim.

107. I understand that claim terms are normally used consistently throughout a patent. Thus, the meaning of a term may help inform the meaning of the same term in other claims. Differences between claims may also help define the terms, although this may not be the case where the specification or prosecution history indicate that such differences do not impact the scope of the claims.

108. I understand that a patentee can act as its own lexicographer by defining a term, in the patent specification, to have a specific meaning. It is my understanding that statements made to the patent office by the patentee or its legal representative during prosecution can serve to illuminate, or possibly narrow the proper scope of claim terms, and that such statements must be considered when construing the claim terms. This is sometimes referred to as a disclaimer. I have taken into account these principles in my analysis.

109. I understand that reference materials that were publicly available at the time that the patent application was filed, such as dictionaries, treatises or other technical references, may provide context and background for deciphering how one of ordinary skill in the art would have considered the terms used in the claims.

110. However, I understand that such references, as well as testimony (including this report) are generally known as "extrinsic evidence,: and are accorded less weight than evidence found within the patent and prosecution history. In addition, I understand that extrinsic evidence that is inconsistent with the claims, specification, or prosecution history should not be considered in the claim construction process.

F. Section 112(f) Means Plus Function

111. I understand that under pre-America Invents Act (AIA) 35 U.S.C. § 112(6) and post-AIA § 112(f) "An element in a claim for a combination may be

expressed as a means or step for performing a specified function without the recital of structure, material, or acts in support thereof, and such claim shall be construed to cover the corresponding structure, material, or acts described in the specification and equivalents thereof."

112. I understand that when claim terms use the words "means . . . for" and recites a function, and the term does not recite any structure for performing that function, the term should be construed pursuant to Section 112(f) looking for a corresponding structure, material, or act described in the specification and equivalents.

G. Section 112 Definiteness

113. I understand that, under 35 U.S.C. § 112 ¶ 2, "[t]he specification shall conclude with one or more claims particularly pointing out and distinctly claiming the subject matter which the applicant regards as his invention."

114. I understand that that claims must be definite. This means that the claims must particularly point out and distinctly claim the subject matter that the applicant regards as her invention. I understand that indefiniteness is evaluated from the perspective of a person of ordinary skill in the art at the time of a patent's filing. I understand that a patent claim is indefinite if the claim, when read in light of the specification and the prosecution history, fails to inform, with reasonable certainty, a person of ordinary skill in the art of the scope of the invention. Absolute or

mathematical precision in claim language is not required and even if more than one interpretation is presented for a claim term, the term may still be definite if an informed and confident choice is available among the contending alternative definitions.

VIII. CLAIM CONSTRUCTION

115. I understand that in *Inter Partes* review, claims "shall be construed using the same claim construction standard that would be used to construe the claim in a civil action under 35 U.S.C. 2282(b), including construing the claim in accordance with the ordinary and customary meaning of such claim as understood by one of ordinary skill in the art and the prosecution history pertaining to the patent." 37 C.F. R. § 42.100(b). This is also referred to as the *Phillips* standard as explained in the case *Phillips v. AWH Corp.*, 415 F.3d 1303 (Fed. Cir. 2005). I have applied this standard in rendering my opinions herein. My full opinions in the district court litigation regarding claim construction are provided as Exhibit

A. "fastener" (all claims)

116. In my opinion, the term "fastener," as it is used in the claims of the '842 Patent, means "one feature whose primary purpose is to attach something." This construction of the term does not require that the fastener be made from a single material that is "integrally formed." Further, it is consistent with what a POSITA would have understood a fastener to mean based on the specification of the '842

Patent—that a fastener provides surfaces onto which other components may attach. *See* Ex. 1001, 2:31–35 (describing a "fastener" that "provides a first surface to which a chip and light emitting device module attach, while also providing a second surface for attachment of a second fastener, or a PCB."); *see also* Institution Decision at 22-23. Likewise, the claims of the '842 Patent support this definition of the term "fastener"—claim element [3b] recites "a first fastener having a first portion and a second portion, the first portion disposed adjacent to the first side of the light guiding plate, wherein the first portion and the second portion are arranged in a substantially perpendicular relationship to form a substantially L-shaped structure" and [3c] recites "a light emitting device disposed on the first portion." Ex. 1001, 4:40–46. Claim 5 further describes a "circuit board . . . connecting the second portion." Id., 4:52–53. Thus, the claims clearly describe the "first fastener" has "a first portion and a second portion" whose purpose is to fasten an LED and a circuit board.

B. "heat dissipating means . . . for conducting a heat generated thereon" (claims 6 and 9)

117. This term uses the words "means . . . for" and recites the function "for conducting a heat generated thereon." This term does not recite any structure for performing that function. Accordingly, it has been explained to me that an element in a claim expressed as a means or step for performing a specified function without the recital of structure shall be construed to cover the corresponding structure described in the specification. 35 U.S.C. § 112(6) (pre-AIA).

118. It is my opinion that a POSITA would have understood from the specification that the structure performing the "heat dissipating means" is heat dissipating plates 46. *See* Ex. 1001, Fig. 4, 2:9-11, 3:25-32, 3:51-58. Thus, in my opinion term "heat dissipating means" as claimed by the '842 Patent refers to heat dissipating plates. These are examples of fins or plates of a heatsink. In the field, their purpose is to dissipate heat via convection and radiation in order to prevent other materials from overheating. In the LED context, this would involve dissipating heat generated by the LED, usually into the surrounding air.

C. "the circuit board connecting the second portion" (claims 5 and 7)

119. In my opinion, a POSITA would interpret the term "the circuit board connecting the second portion" as "the circuit board connecting to the second portion." Further, it is my opinion that a POSITA would understand that the term "connecting" requires something more than just touching, such as attaching or completing an electrical connection. My opinions are based on the plain language of the claims as a POSITA would have interpreted them. My opinions are further supported by the specification, which disclose that the second portion and PCB are attached. *See* Ex. 1001, 3:27-28 ("Thus, PCB 45 is attached on one side to the second portion 44B of the L shaped fastener . . ."), 3:51-54.

IX. Challenge 1: The Petition's Anticipation Theory Based on Uekusa Fails to Disclose All Elements of Claims 5-9

A. Uekusa Does Not Disclose an L-shaped Fastener (all claims)

120. I have applied the construction of the term "fastener" to mean "one feature whose primary purpose is to attach something." I have also been asked to consider the term "fastener" as "a structure that provides surfaces for attachment." Under both interpretations of the term fastener, the result is the same and Uekusa does not anticipate any of the claims of the '842 Patent.

121. The Petition and Dr. Baker's challenge 1 asserts that Uekusa anticipates claim 3. In my opinion, the Uekusa reference fails to disclose at least claim element [3b], which recites "a first fastener having a first portion and a second portion, the first portion disposed adjacent to the first side of the light guiding plate, wherein the first portion and the second portion are arranged in a substantially perpendicular relationship to form a substantially L-shaped structure." Ex. 1001, 4:40-45. Similarly, the Uekusa reference fails to disclose at least element [7b] recites, "a first fastener having a first portion and a second portion, the first portion extending along the first side of the light guiding plate, and the second portion extending above the light guiding plate wherein the first portion and the second portion are arranged in a substantially perpendicular relationship to form a substantially L-shaped structure." Ex. 1001, 4:64-5:3. Claims 5 and 6 depend from claim 3. Claims 8 and 9 depend from claim 7.

122. Dr. Baker opines that Uekusa discloses "a first fastener having a first portion and a second portion, the first portion disposed adjacent to the first side of

the light guiding plate, wherein the first portion and the second portion are arranged in a substantially perpendicular relationship to form a substantially L-shaped structure" and includes an annotated version of Fig. 3 of Uekusa to support his opinion. Ex. 1002, ¶85. I have reproduced this image below.

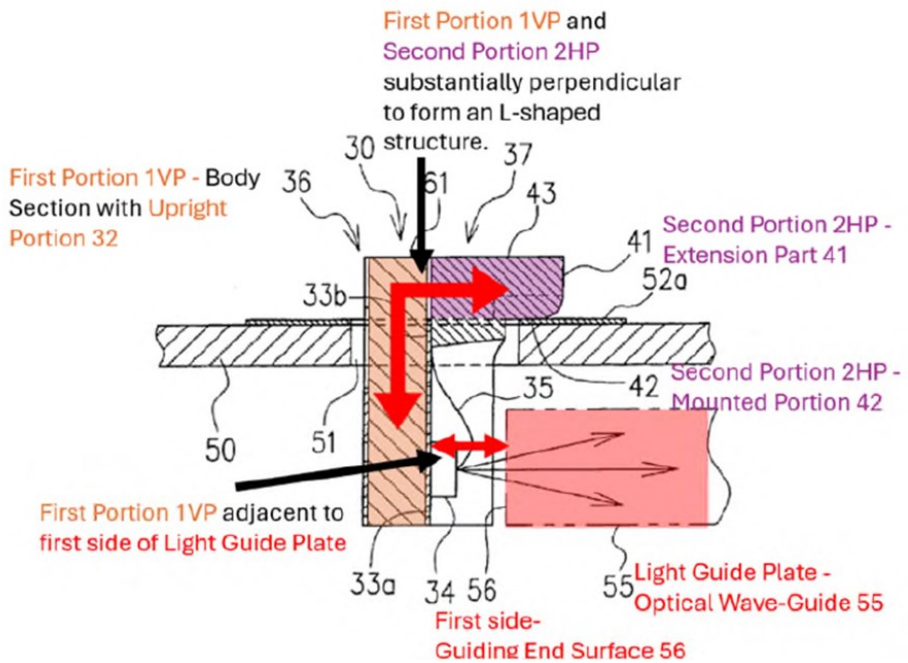

123. In my opinion, Dr. Baker's opinion is flawed and based on the hindsight of an expert attempting to force an unreasonable mapping of the claim language onto non-fastener parts of Uekusa that a POSITA would not consider to be the claimed "fastener," because the primary purpose is not to attach anything (in fact, it cannot attach anything). Indeed, as explained below, a POSITA understood that the structure identified by Dr. Baker as the second portion 2HP *does not provide surfaces that attach anything* and therefore also is not a fastener under the alternate construction "a structure that provides surfaces for attachment." After reading the

'842 Patent and upon viewing Fig. 3 of Uekusa, Dr. Baker apparently perceived an L-shaped structure and formed his opinions based on that impression rather than determining whether the teachings of Uekusa actually anticipated any portion of the '842 Patent.

124. A POSITA would have readily understood the L-shaped structure of the '842 Patent is what is referred to in the industry as a "lead frame". The external surface of a lead frame is used to attach the LED package to a circuit board using solder.

125. Uekusa does not similarly describe an L-shaped fastener. Instead, Uekusa describes a modification to T-shaped LEDs (which were known in the art and were mounted in holes through PCBs) by adding an extension perpendicular to the cross of the T to provide three points of contact, thus increasing stability. *See* Ex. 1008, 2:26-31 ("It is, therefore, a first object of the present invention to provide a light emitting diode in which the light emitting diode can be supported with at least three points when it is mounted on a peripheral edge of a hole in a motherboard to carry out stability of a posture of the light emitting diode."). Of these three points of contact, two ends of the electrodes 52a, 52b are soldered (and thus attached) to the motherboard 50. Ex. 1001, 5:5-10. Resin cannot be similarly soldered, so the primary (or any other) purpose of Uekusa's resin structure is not to attach to the motherboard 50, but merely to provide support.

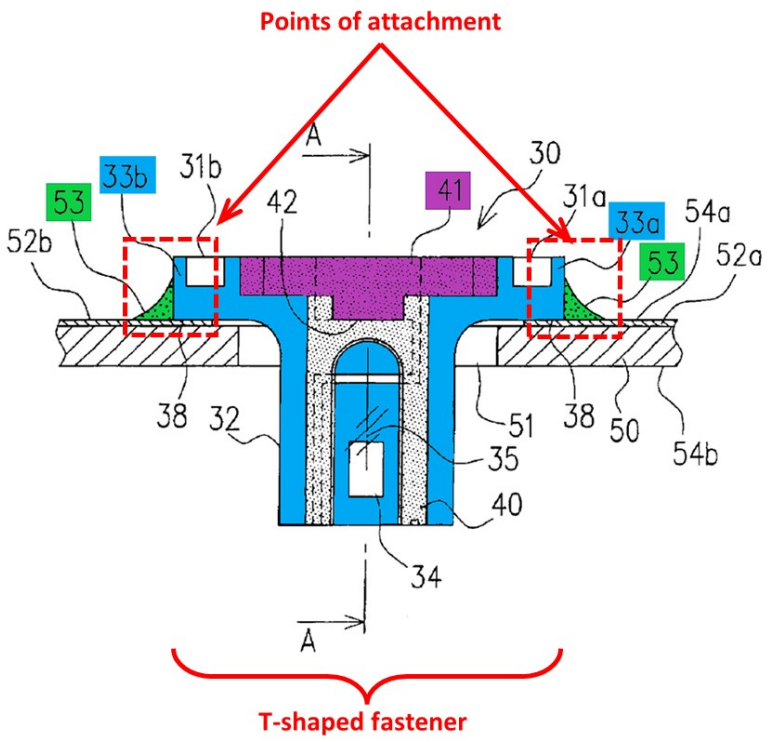

126. Uekusa's resin is distinct from the teachings and claims of the '842 Patent, which would have been immediately recognized by a POSITA. The '842 Patent teaches that the second portion of the L-shaped fastener provides surfaces that may be attached (fastened) to the PCB or to an LED chip. Ex. 1001, 3:27-29 ("Thus, PCB 45 is attached on one side to the second portion 44B of the L shaped fastener and on the other side to the heat-dissipating pates 46.").

127. The structure identified by Dr. Baker as second portion of the L-shaped fastener does not provide a surface capable of attaching anything, which suggests a reliance on hindsight. Dr. Baker indicated the second portion corresponds to Uekusa's extension part 41 and mounted portion 42, which are portions of *resin forming section 37* (emphasis added).

128. Uekusa describes the resin forming section as "a resin forming section including a non-translucent frame projecting from a front surface of the body section and an extension part which projects more forwardly than the frame from the body section and which has a mounted portion mounted on a peripheral edge of the hole of the mother board; a light emitting diode element mounted in a concave portion provided in the frame; and a translucent resin body formed in the concave portion of the frame to seal the light emitting diode element." Ex. 1008, 2:41-49.

129. Epoxy resin materials are incompatible with solder as they will melt or decompose if exposed to the temperatures at which solder melts, and solder will not stick. To demonstrate this, I attempted to apply solder to the base of an epoxy resin-based LED package. The damage to the package where the molten solder made contact is clear.

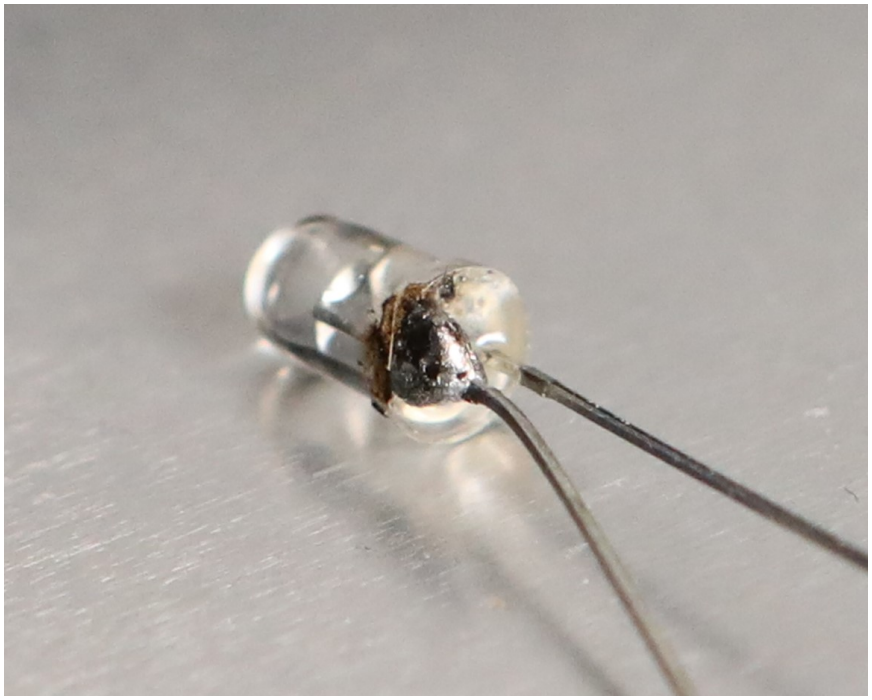

130. Solder is how the package of Uekusa would have been attached to the PCB. Uekusa explicitly teaches using solder to connect or fasten the electrodes disposed on Uekusa's T-shaped structure. *See, e.g.,* Ex. 1008, 5:7-11 ("substrate electrodes 33a and 33b on the base portions 31a and 31b and circuit electrodes 52a and 52b print-wired on the motherboard 50 are fixed by means of a solder 52 to secure firmly the light emitting diode 30 on the motherboard 50."). For example, I have provided annotated figures 2 and 3 of Uekusa illustrating this point:

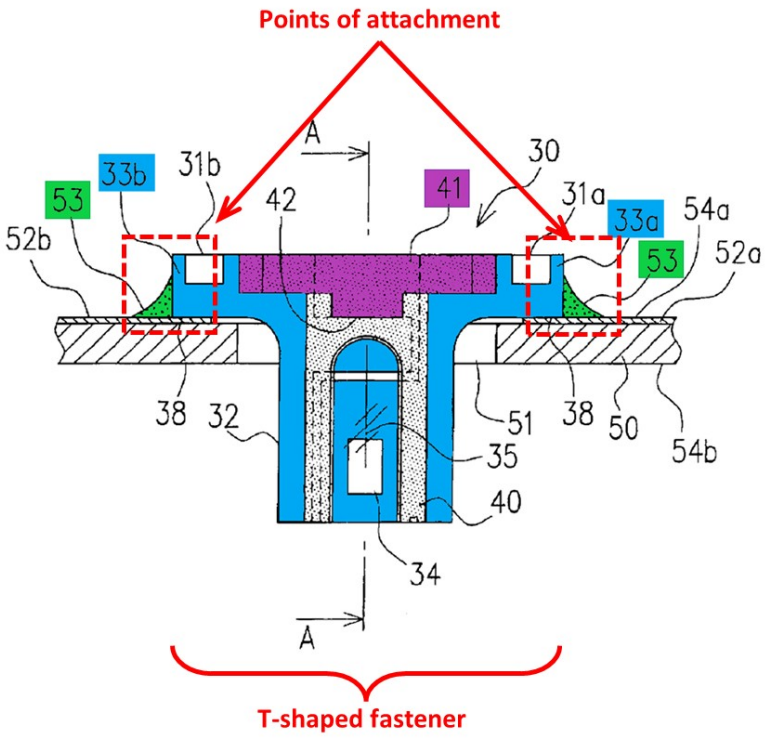

131. In contrast, the resin forming section 37 of Uekusa is not performing any fastening. The resin is not fastened to the motherboard 50. Uekusa does not disclose any way to attach resin forming section 37 to anything. Other methods of attachment were inadequate, such as glue (which would not hold up during the

soldering process) and snap-fit connections (which required an additional component to be fixed to the PCB). Ex. 1008, Figs. 2, 3.

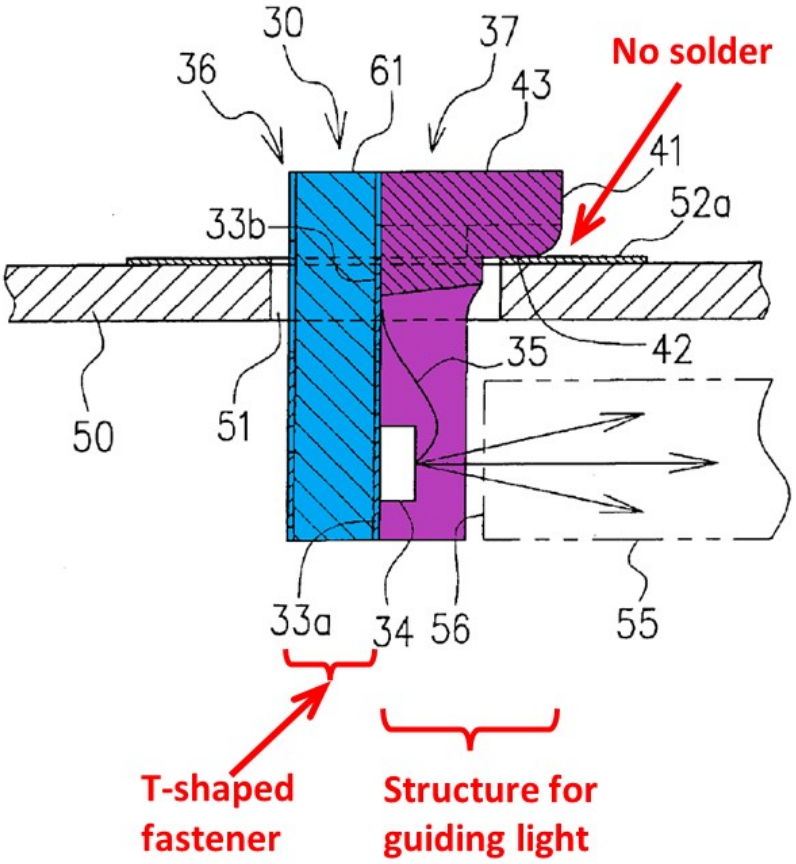

132. The resin forming section 37 is not fastening the T-shaped fastener to anything. The resin forming section 37 is merely resting against, but not fastened to, the motherboard 50. I was unable to identify any component of Uekusa being fastened by the resin forming section 37 to another component. This is consistent with the purpose stated in Uekusa, which is to provide a third point of contact to support the "T" shaped LED from swinging forward due to its center of gravity—

not to attach or fasten the LED, which is done by the T-shaped structure, which was known in the art. *See* Ex. 1008, 2:16-24 ("However, because the aforementioned T-shaped light emitting diode 15 has such a structure that the protrusion 18 is formed on the front surface of the upright section 17, there is a problem that a center of gravity of the light emitting diode offsets forwardly and therefore an unbalance for inclining the light emitting diode generates when the base sections 16a and 16b are mounted on the peripheral edge of the hole 9 provided in the motherboard 8."), 2:26-31 ("It is, therefore, a first object of the present invention to provide a light emitting diode in which the light emitting diode can be supported with at least three points when it is mounted on a peripheral edge of a hole in a motherboard to carry out stability of a posture of the light emitting diode."), Fig. 3 (annotated below).

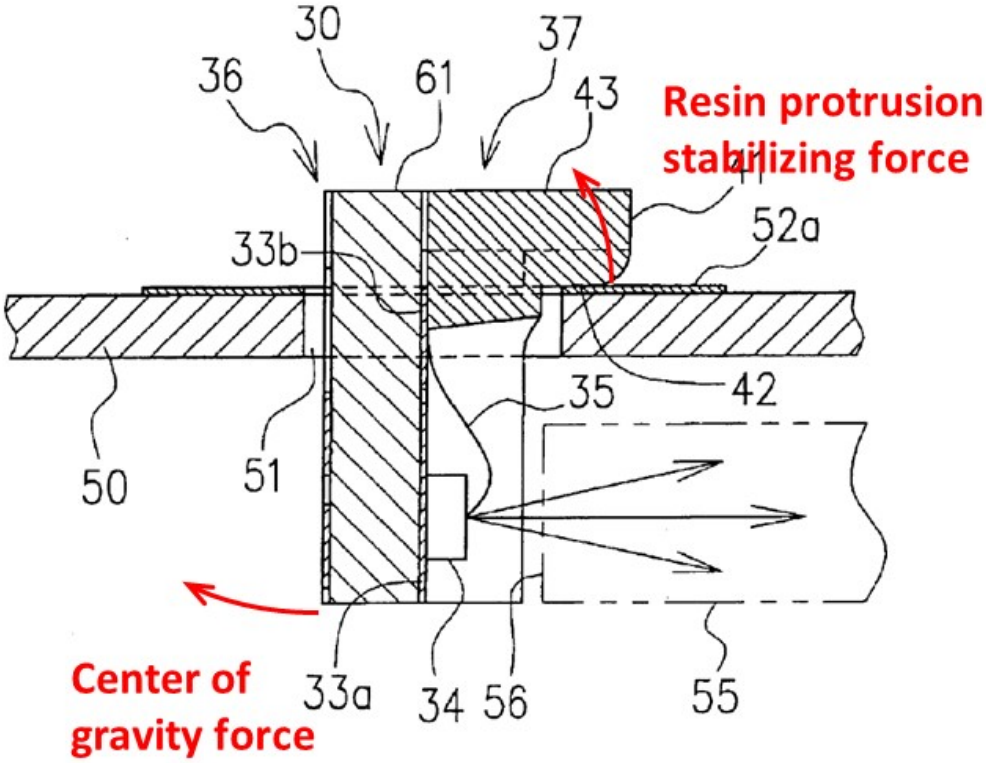

133. To further clarify the issues with the LED package of Uekusa, I created a CAD model in SolidWorks, which I have produced below. In light of the immediately preceding discussion on the qualities of resin, the rendering shows that the entire second portion identified by Dr. Baker is a transparent resin material and is a helpful illustration of why the resin forming section would be incapable of attaching (or fastening) the LED of Uekusa to the circuit board.

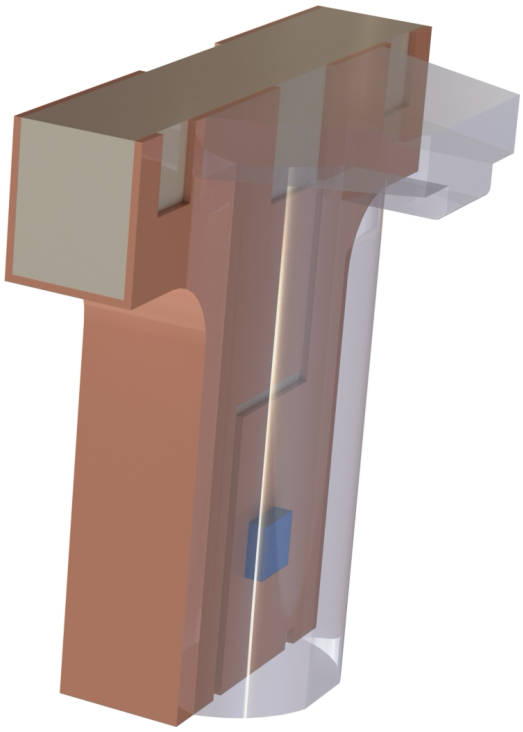

134. Accordingly, Uekusa does not anticipate independent claims 3 and 7 for at least the above reasons.

135. Claims 5 and 6 depend from claim 3 and claims 8 and 9 depend from claim 7, so it is my opinion that Uekusa fails to anticipate claims 5, 6, 8, and 9 of the '842 Patent due to their dependence on claims 3 and 7.

B. Uekusa Does Not Disclose "the circuit board connecting the second portion" (claims 5 and7)

136. Claims 5 and 7 similarly recite a limitation "the circuit board connecting the second portion". Ex. 1001, 4:53-54, 5:7-8. I apply the construction "the circuit board connecting to the second portion" where "connecting" requires something more than touching, as I explain §VIII.C. As explained in §IX.A,

Uekusa's resin forming section 37 cannot be soldered and cannot otherwise attach anything. Further, resin is an electrical insulator and does not provide an electrical connection when in contact with an electrical conductor. The portion of resin forming section 37 that Petitioner points to as being the claimed second portion does nothing more than "touch" the circuit board. Thus, Uekusa's resin forming section 32 does not "connect" to the circuit board in any fashion and claims 5 and 7 are valid over Uekusa.

C. No Heat Dissipating Means (Claims 6 and 9)

137. I use the construction of "heat dissipating means" to correspond to "heat dissipating plates." *See* §VIII.B, *supra*. It is my opinion that Uekusa fails to anticipate claims 6 and 9 of the '842 Patent because Uekusa does not disclose any "heat dissipating plates." Specifically, there are no heat dissipating plates in Uekusa—in fact, the patent does not even mention the word "heat." *See* Ex. 1008. For this reason alone, Uekusa fails to anticipate claims 6 or 9. *Compare* Ex. 1001, Fig. 4 *with* Ex. 1008, Fig. 3 (illustrating a lack of heat dissipating plates in Uekusa):

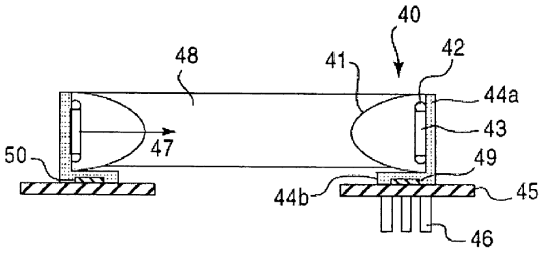

Fig.4

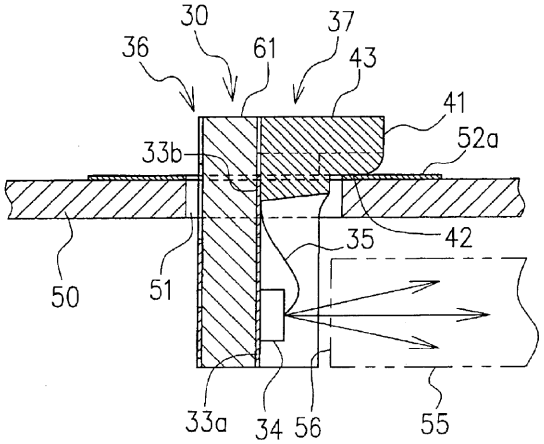

138. Even if my construction of the term "heat dissipating means" as heat dissipating plates is not adopted by the board, it is also my opinion that the Uekusa reference fails to anticipate claims 6 or 9 of the '842 Patent under Dr. Baker's broader construction that a corresponding structure to the term "heat dissipating means" includes "at least one heat dissipating plate." Dr. Baker opined that portions of the electrode structures of Uekusa's LEDs would serve as "at least one heat dissipating plate" in this context. Ex. 1002, ¶107 ("As shown in annotated Figures 2 and 3 above, Uekusa discloses a motherboard 50 and circuit electrodes 52a and 52b which are attached to horizontal portion 2HP mounted portion 42 and extension part 41, and heat dissipating means portions of substrate electrodes 33a and 33b which are attached onto the surface of circuit board (50, 52a, and 52b) by solder 53 for conducting a heat generated thereon."). Below, I have reproduced the annotated version of Uekusa's Fig. 2 cited by Dr. Baker.

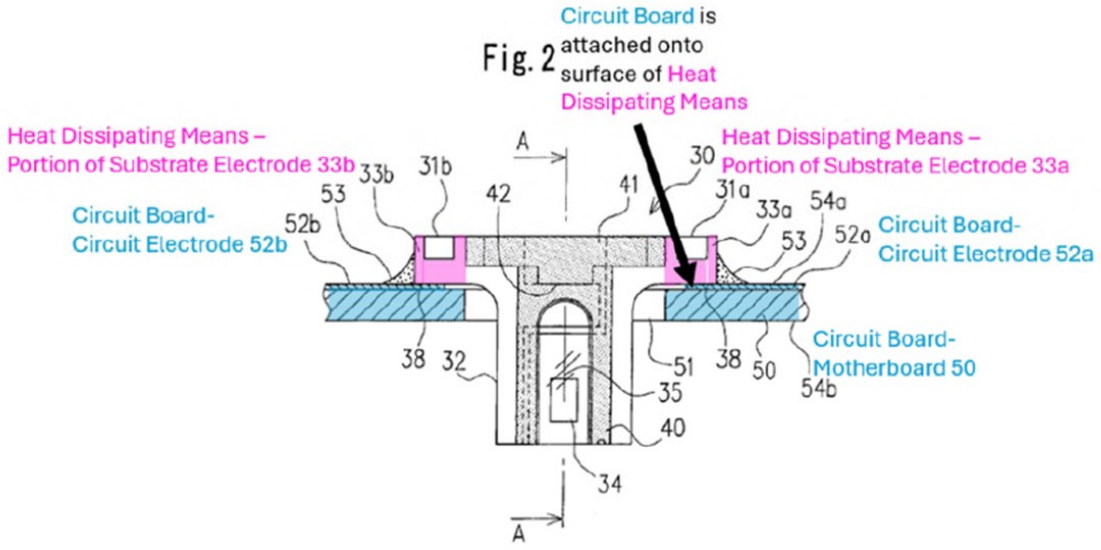

139. First, Dr. Baker's relative inexperience with the principles of heat transfer led him to erroneously assume that heat would be transferred to both electrodes. This appears to be based on Dr. Baker's belief in an equivalency between electrical conductivity and thermal conductivity. *See* Ex. 1002, ¶107 ("A POSITA would have understood that substrate electrodes would be made of metal to conduct electricity to drive the LED 34, and so they also would inherently have conducted heat from any component they touched."). Dr. Baker's statement is only accurate in the non-limiting understanding of the claim term that every material in the universe can technically dissipate heat (even insulators). What Dr. Baker fails to appreciate is the orders of magnitude difference in the amount of energy transfer via electrical current versus heat transfer and what a POSITA would have considered to be a "heat dissipating means."

140. Inside LED packages, electrical connections are commonly made using 1 mil (25 µm diameter) gold wire. Such wire can safely carry about 700 mA of current. This represents an enormous amount of electrical energy. Gold has a thermal conductivity of about 315 W/m K. However, transferring 160 mW of heat over 1mm of the same wire would require a temperature difference of about 1000°C.

141. A POSITA would have understood that heat would, at best, only be dissipated by the metallization on which the LED chip was mounted and not from **both** electrodes as incorrectly identified by Dr. Baker. I have annotated a version of Fig. 7 of Uekusa below to more clearly show this scenario. As can be seen, the LED chip (blue) is in physical contact with only one (red) of the two structures highlighted by Dr. Baker.

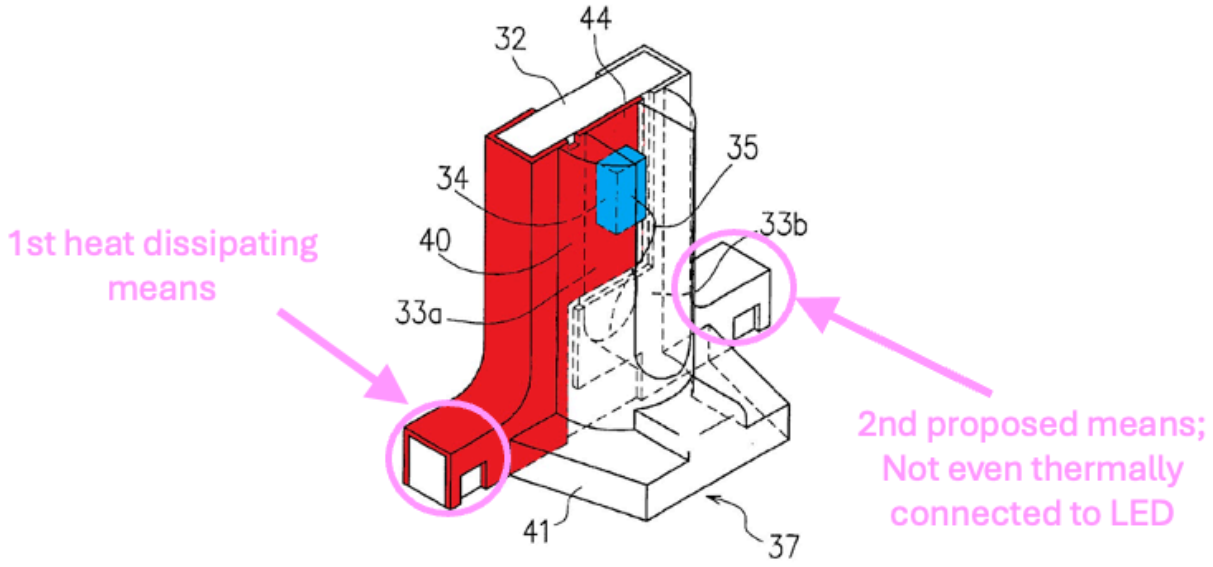

142. However, as discussed above, the indicated electrode portions that Dr. Baker identified as heat dissipating means are directly adjacent to the transparent

resin material through which the LED chip emits light. A POSITA would have been well aware of the temperature sensitive nature of this material. As discussed above, this type of material is incapable of tolerating the temperature of molten solder and for that reason it necessarily follows that the thermal resistance of the electrode structures is high enough that the resin material is not damaged. This high thermal resistance prevents the resin material from experiencing high temperatures during solder processing but also prevents heat dissipation during normal operation.

143. This type of behavior would be understood and expected by a POSITA in accordance with Fourier's Law of heat conduction (discussed above). Specifically, the metal itself used for the conductors may have a high thermal conductivity, but the cross-sectional area of the conductors is so small that the total heat transferred via conduction is minimal.

144. For the reasons discussed above, a POSITA would be aware that the transparent resin material that surrounds the LED chip is sensitive to temperature and cannot endure the temperatures associated with molten solder. Therefore, the amount of heat conducted from the solder points to the resin is necessarily understood to be miniscule otherwise the resin and hence package would be damaged and become inoperable from overheating. A heatsink normally dissipates heat out of both sides of its fins or plates into the air, water, or other material suitable for transporting heat away. The heat dissipating plates 46 shown in the '842 patent

have spaces between them for airflow. A POSITA would know that the fins or plates should not contact thermal insulators (or else they would lose effectiveness) or materials that are easily damaged by heat (like resin, which can burn or melt).

145. Further, a POSITA would be aware that the structure of Uekusa's LED is a glass epoxy material, which has similarly poor thermal conduction properties. Ex. 1008, 1:18-20 ("The light emitting diode 1 has a structure in which a pair of substrate electrodes 3 and 4 is patterned on an upper surface of a glass epoxy substrate 2").

146. In sum, the only portion of Uekusa's LED that participates in heat dissipation in any manner is the thin layer of metal that the LED chip is mounted on. As explained above, this layer is thin and the cross-sectional area is small—accordingly, any heat transfer via conduction to the area indication by Dr. Baker will be small to negligible. Thus, a POSITA would have understood that the portions of Uekusa's structure identified by Dr. Baker are not a "heat dissipating means" and any attempt to map it as such is based on hindsight.

1. Claim 3

147. Claim 3: In my opinion Uekusa fails to anticipate at least claim element 3b of the '842 Patent, which recites in part "a first fastener having a first portion and a second portion, the first portion disposed adjacent to the first side of the light guiding plate, wherein the first portion and the second portion are arranged in a

substantially perpendicular relationship to form a substantially L-shaped structure" because Uekusa does not disclose an L-shaped fastener. Ex. 1001, 4:40-45; *see* §A.

2. Claim 5

148. Claim 5: Claim 5 depends from claim 3. For at least the reasons discussed above for claim 3, it is my opinion that Uekusa fails to anticipate claim 5 of the '842 Patent. Claim 5 further recites the element "the circuit board connecting to the second portion" and, applying the construction "the circuit board connecting the second portion" where connecting requires something more than touching. As I explained in §IX.B, claim 5 is not anticipated by Uekusa because Uekusa's resin forming section 37 does nothing more than merely touch the motherboard—it does not otherwise attach or complete an electrical connection, which does not meet the limitation of the circuit board "connecting" a second portion.

3. Claim 6

149. Claim 6: Claim 6 depends from claim 3 and is not anticipated by Uekusa for the reasons in claim 3. Further, Uekusa does not anticipate the claimed "heat dissipating means attached onto the surface of the circuit board for conducting a heat generated thereon" because there are no heat plates nor are there any other heat dissipating means, as a POSITA would have understood. *See*, §IX.C, *supra*.

4. Claim 7

150. Claim 7: Uekusa fails to anticipate claim element 7b of the '842 Patent, which recites "a first fastener having a first portion and a second portion, the first portion extending along the first side of the light guiding plate, and the second portion extending above the light guiding plate wherein the first portion and the second portion are arranged in a substantially perpendicular relationship to form a substantially L-shaped structure" because Uekusa does not disclose an L-shaped fastener. Ex. 1001, 4:64-5:3; *see* §A.

5. Claim 8

151. Claim 8: Claim 8 depends from claim 7. For at least the reasons discussed above with respect to claim 7, it is my opinion that the combination of Uekusa and Isoda fails to render obvious claim 8 of the '842 Patent.

6. Claim 9

152. Claim 9: Claim 9 depends from claim 7. For at least the reasons discussed above with respect to claim 7, it is my opinion that the combination of Uekusa and Isoda fails to render obvious claim 8 of the '842 Patent. Further, it is my opinion that no combination of Uekusa and Isoda would result in the claimed "heat dissipating means attached onto the surface of the circuit board for conducting a heat generated thereon." *See*, §IX.C, *supra*.

X. Challenge 2: The Petition's Obviousness Theory Based on Uekusa and Isoda Fails to Disclose All Elements of Claims 5-9

A. Challenge 2 fails because Isoda Fails to Cure the Deficiencies of Uekusa

153. Nothing in Isoda teaches or suggests an L-shaped fastener to overcome the deficiencies of Uekusa discussed in Challenge 1. *See* Ex. 1005; § IX.A, *supra*. Accordingly, no combination with Isoda cures Uekusa's deficiencies with respect to the L-shaped fastener, as discussed above, and the proposed combination fails with respect to all the challenged claims.

B. No Motivation to Combine: the proposed modifications go against the explicit teachings of the references

154. Dr. Baker argues that a POSITA would modify Uekusa following the teachings of Isoda. Ex. 1002, ¶118 ("It would have been obvious to a POSITA to modify Uekusa in view of Isoda's teachings to add a plurality of heat dissipating plates to further increase the heat-dissipation of Uekusa's electronic components."). This is again indicative of hindsight as Isoda specifically teaches away from prior art devices such as Uekusa.

155. Isoda succinctly describes LED packages of the construction of Uekusa and some of the issues associated with their construction. Ex. 1005 at 1:19-36 ("The light emitting device 1 is mounted on a print substrate 6, connecting the electrodes 2a and 2b with a pair of conductive patterns 6a and 6b. When current is applied to the LED 3 from the patterns 6a and 6b through the electrodes 2a and 2b, the LED 3 emits light 7. . . . However, the substrate 2 made of resin such as epoxy resin has a very low heat conductivity which is about one-hundredth of that of copper.

Therefore, heat emitted from the LED 3 scarcely transmitted to the print substrate 6. Consequently when a high current is applied to the LED in order to produce high brightness, the emitted heat becomes high temperature, which causes junctions in the LED to degrade, and the sealing member 5 to discolor which decreases the transparency of the member. Thus, the quality of the LED device largely reduces.").

156. Importantly, Isoda clarifies that the issue is use of so-called print substrates which are generally made of epoxy resin and have a low thermal conductivity, effectively trapping heat inside the device, which is why it proposes a direct connection between the LED and the heatsink with a thermally conductive material. *See* Ex. 1005, 1:57-67 ("Heat generated in the LED 14 is transmitted to the print substrate 16 through the conductive members 11a and 11b, so that the heat is efficiently radiated from the print substrate 16 if the substrate is made of a material having high heat conductivity. However, the print substrate 16 is generally made of cheap material such as an epoxy resin. As described above, the epoxy resin has low heat conductivity. Therefore, the heat is not sufficiently transmitted to the print substrate, thereby rising the temperature of the LED, and reducing the quality thereof."). This is precisely the issue with Uekusa and a POSITA following the teachings of Isoda would abandon Uekusa, not modify Uekusa.

157. Dr. Baker incorrectly argues that a POSITA would have been motivated by the teachings of Isoda to place heat dissipating fins to left, right, and back of

Uekusa's device to improve heat dissipation. Ex. 1002, ¶121 ("It would have been obvious for a POSITA to combine Uekusa's teachings related to LCD backlight devices utilizing LEDs with Isoda's teachings of enhanced heat dissipation methods by placing heat dissipating fins disclosed in Isoda to the left, right, and back sides of extension part 2HP on Uekusa's motherboard 50 and on the opposite side of motherboard to the left, right, and back sides of Uekusa's 1VP portion to enhance heat dissipation. A POSITA would have selected the precise location (or locations) of the heat dissipating fins in the combination based on the critical dimensions of the overall system design, but each location and combination of locations would have been obvious to a POSITA. Uekusa and Isoda Combined Demonstratives 1 and 2 above show obvious configurations of fin locations on Uekusa, for ease of illustration.").

158. I have reproduced the referenced Combined Demonstratives 1 and 2 of Dr. Baker below.

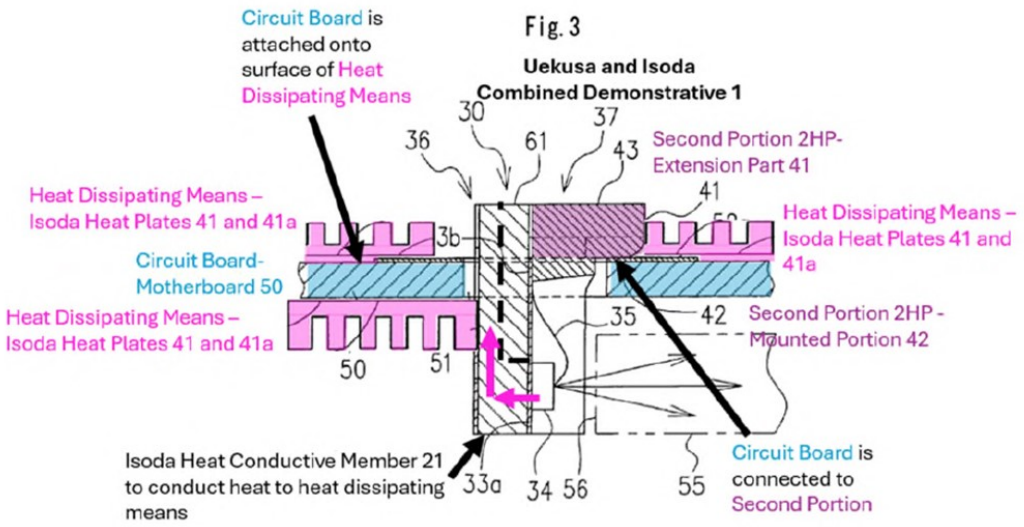

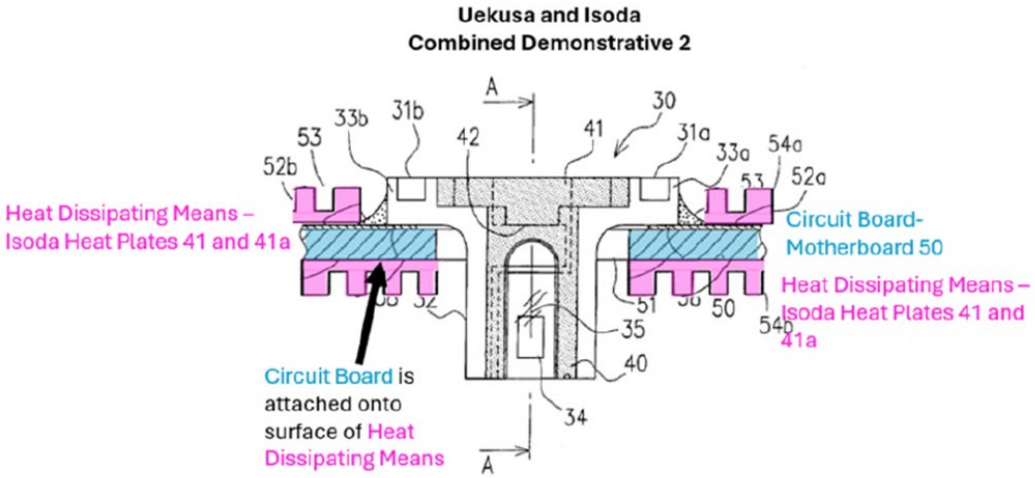

159. Even if a POSITA were to attempt to combine Uekusa and Isoda (despite difficulties in manufacturing and cost in putting a conductive member in half of Uekusa's structure), the location of the heat sinks added by Dr. Baker are ridiculous and correspond almost precisely to the locations identified by Isoda as resulting in inefficient heat transfer. *See* Ex. 1005, 1:57-67. Such locations would

therefore specifically ***not*** be selected by a POSITA following the teachings of Isoda, even assuming a POSITA was motivated to attempt to combine Uekusa and Isoda. Critically, the positions and, more importantly, orientations of the heat sinks identified by Dr. Baker in his demonstrative above are terrible configurations for average thermal resistance for each fin. A POSITA would be aware that Fourier's Law states that heat dissipation via conduction is inversely proportional to the distance. By placing the heat sinks so that the side of one fin is coincident with Uekusa's LED package, Dr. Baker has ensured that maximized the distance that heat must be transported via conduction before it can be dissipated via convection. This reduces the average temperature of the fins and therefore reduces convective heat dissipation. This would hold true regardless of the heat dissipation capabilities of Uekusa's LED package, which are poor, according to my analysis above in §IX.C and by the teachings of Isoda. Ex. 1005, 1:27-31, 1:61-67.

160. It is apparent that Dr. Baker used hindsight to create his proposed modification because Dr. Baker is making modifications that are not taught or suggested in Isoda. If anything, Isoda teaches to put a heat plate directly behind a material with poor thermal properties, using a short, thermally conductive member to directly connect the heatsink with the LED. This can be seen in the annotated version of Fig. 4 of Isoda, reproduced below in which the LED chip 33 is highlighted in blue, the heat conductive members 21 are highlighted in red, the print substrate

(circuit board) 40 highlighted in tan, and the cooling member (heat sink) 41 is highlighted in pink.

FIG. 4

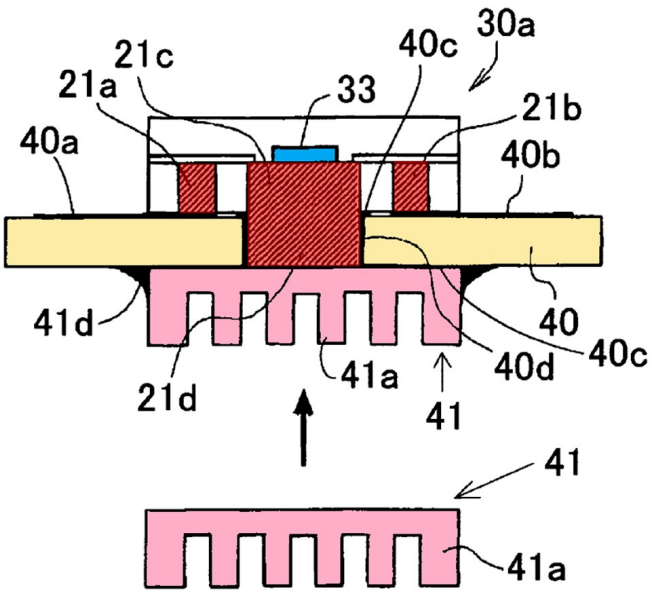

161. Had a POSITA attempted to apply the actual teaching of Isoda to modify Uekusa's system *without* hindsight, the result would instead be as shown below. This is the only logical placement for a POSITA as it makes efficient use of the fin structures. This allows heat to be conducted to the base of all of the fins and then conducted to the distal ends to be dissipated via convection.

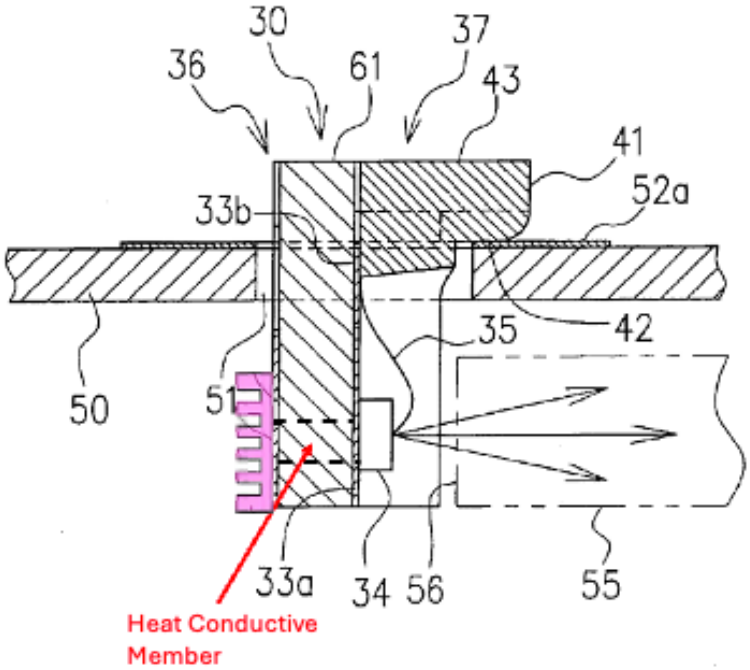

162. In contrast, Dr. Baker has departed from the actual teaching of Isoda, proposing to put the thermal members far off to the side. Dr. Baker's annotated figures do not show a thermally conductive member between the LED chip and his proposed heat plates. Without a sufficiently thermally conductive pathway connecting, Dr. Baker's heat plates will make a negligible contribution to heat management. Because I could not find such a thermally conductive pathway, my opinion is that Dr. Baker's heat plates will have a negligible effect.

163. Additionally, I note that the two heat sinks on the left side of combined demonstrative 1 would extend the longitudinal axis of the waveguide plate in direct contradiction of the teachings of the '842 Patent. *See* Ex. 1001, 2:35-40 ("In this way, the light emitting device emits light longitudinally along a light guiding plate,

thus optimizing the travel path of the emitted light, ***while maintaining a compact shape by placing the PCB and heat dissipating plates away from the longitudinal axis of the light guiding plate.***") (emphasis added). Thus, the result of extending the waveguide would have further motivated a POSITA to not make the modification proposed by Dr. Baker.

164. The rightmost heat sink of combined demonstrative 1 is located adjacent to the extension of the transparent resin material that encapsulates the LED chip. As discussed above and as admonished by Isoda, this material has a low thermal conductivity, and a POSITA would have had no motivation to place any sort of heat dissipating structure at this location.

165. Similarly, as I discussed above with respect to the Uekusa reference, a POSITA would be aware that no relevant amount of heat generated by the LEDs would be conducted to the locations of the Isoda heat plates identified in combined demonstrative 2. Accordingly, a POSITA would have had no motivation to place a heat dissipating structure in proximity to the portions of Uekusa Dr. Baker incorrectly identified as heat dissipating means.

166. Dr. Baker's attempt to combine Uekusa and Isoda is rife with evidence of hindsight and it seems that he has relied solely on images without technical consideration of what the references themselves teach. His inability to recite even the basics of heat transfer during deposition require his opinions for combinations

be given little, if any, weight. *See, e.g.,* Ex. 2024, 67:7-8 ("For dissipating heat, volume is important), 35:3-6 ("Q[:] And are you familiar with convective heat transfer? A[:] Yeah, that's kind of what I mean by radiative, is convection, yeah."). Dr. Baker has not demonstrated the requisite technical background with respect to heat transfer and thermal management for his opinions to be accepted without significant and specific technical support.

167. One example of such an opinion made by Dr. Baker is: "A POSITA would have recognized that increasing surface area to dissipate more heat would have been especially important in a small form factor portable phone or other small electronic device which would have minimal surface area to dissipate heat. Further, a POSITA would have understood that the predictable result from adding heat fins to either side of motherboard 50 of Uekusa would be greater heat dissipation." Ex. 1002, ¶125. This is statement is much too broad and may or may not be true. The issue is that convective heat transfer depends on both the area *and the ability of a fluid (generally air) to flow over that area to dissipate heat*. Adding additional area in the form of narrow channels that restrict flow would increase the area available for heat transfer, but decrease the overall rate of heat transfer as friction forces would reduce the flow rate of air. *See* Ex. 2014 at 121-26. A POSITA familiar with the issues of heat transfer would not make such an overly broad statement, particularly in relation to small devices when form factors are important. Even assuming a

POSITA would be motivated to combine Uekusa and Isoda, POSITA would know that merely adding fins to either side of mother board 50 of Uekusa would not necessarily have a predictable result. *See id.*

C. The Petition's combination would frustrate Uekusa's intended purpose, which a person of ordinary skill in the art would not be motivated to do

168. It is an express purpose of Uekusa to have an LED that is inserted through a hole in a PCB that is stable and supported by at least three points. Ex. 1008, 2:27-31 ("It is, therefore, a first object of the present invention to provide a light emitting diode in which the light emitting diode can be supported with at least three points when it is mounted on a peripheral edge of a hole in a motherboard to carry out stability of a posture of the light emitting diode."). Modifying the device of Uekusa according to the teachings of Isoda would eliminate this possibility.

169. In the remote chance this were possible, it would come at the expense of the second of Uekusa's explicit goals: "It is a second object of the present invention to provide a method for producing a light emitting diode by a simple process." Ex. 1008, 2:32-34.

170. For these additional reasons, the goals of the two patents are incompatible and a POSITA would not have any motivation to combine the teachings of Uekusa and Isoda. Thus Dr. Baker's argument for combining is necessarily based on hindsight as it requires a partial rejection of the core teachings

of the references to arrive at the proposed structure. Such hindsight is premised on working backwards from the language of the claims with the intent to find invalidation, rather than looking at what the applied references themselves teach. Absent such hindsight, a POSITA would logically follow the teachings of Isoda and would not combine it with Uekusa.

171. Indeed, Dr. Baker's purported motivation is: "It would have been obvious to a POSITA to modify Uekusa in view of Isoda's teachings to add a plurality of heat dissipating plates to further increase the heat-dissipation of Uekusa's components." Ex. 1002, ¶118. However, as discussed above, there is no viable means of adding heat dissipating plates to Uekusa to accomplish this goal.

172. What is missing from Dr. Baker's analysis is that Isoda teaches away from the construction method of Uekusa.

173. Even if there were a motivation try and combine the references, any combination would yield a different structure than Dr. Baker proposes due to the thermal properties of Uekusa's structure (*e.g.*, the thermally insular resin).

1. Claim 3

174. Claim 3: For at least the reasons discussed above, it is my opinion that the combination of Uekusa and Isoda fails to render obvious at least claim elements 3b of the '842 Patent, which recites "a first fastener having a first portion and a second portion, the first portion disposed adjacent to the first side of the light guiding

plate, wherein the first portion and the second portion are arranged in a substantially perpendicular relationship to form a substantially L-shaped structure" because neither Uekusa nor Isoda disclose an L-shaped fastener. Ex. 1001, 4:40-45; *see* §IX.A. Further, there is no motivation to combine Uekusa and Isoda, as discussed in §X.B and §X.C, *supra*.

2. Claim 5

175. Claim 5: Claim 5 depends from claim 3. For at least the reasons discussed above in relation to claim 3 it is my opinion that the combination of Uekusa and Isoda fails to render obvious claim 5 of the '842 Patent.

3. Claim 6

176. Claim 6: Claim 6 depends from claim 3. It is my opinion that the combination of Uekusa and Isoda does not render claim 6 of the '842 Patent obvious for the same reasons discussed in relation to claim 3. Further, it is my opinion that no combination of Uekusa and Isoda would result in the claimed "heat dissipating means attached onto the surface of the circuit board for conducting a heat generated thereon."". *See* §X.B and §X.C, *supra*.

4. Claim 7

177. Claim 7: For at least the reasons discussed above, it is my opinion that the combination of Uekusa and Isoda fails to render obvious claim element 7b of the '842 Patent, which recites "a first fastener having a first portion and a second portion,

the first portion extending along the first side of the light guiding plate, and the second portion extending above the light guiding plate wherein the first portion and the second portion are arranged in a substantially perpendicular relationship to form a substantially L-shaped structure" because neither Uekusa nor Isoda disclose an L-shaped fastener. Ex. 1001, 4:64-5:3; *see* §IX.A.

5. Claim 8

178. Claim 8: Claim 8 depends from claim 7. For at least the reasons discussed above with respect to claim 7, it is my opinion that the combination of Uekusa and Isoda fails to render obvious claim 8 of the '842 Patent.

6. Claim 9

179. Claim 9: Claim 9 depends from claim 7. For at least the reasons discussed above with respect to claim 7, it is my opinion that the combination of Uekusa and Isoda fails to render obvious claim 8 of the '842 Patent. Further, it is my opinion that no combination of Uekusa and Isoda would result in the claimed "heat dissipating means attached onto the surface of the circuit board for conducting a heat generated thereon." *See*, §X.B and §X.C, *supra*.

XI. Challenge 3: The Petition's Obviousness Theory Based on Uekusa and what was admitted to be prior art in the '842 Patent ("AAPA") Fails to Disclose All Elements of Claims 6 and 9

180. Dr. Baker's claim for obviousness in this ground is without merit and is plainly based on hindsight, particularly given his lack of experience in the field of

LED backlights and LED package construction. *See* Ex. 1002, ¶159 ("The purported invention is rotating the LED ninety degrees using an L-shape fastener while keeping a circuit board in the prior art orientation (as shown in Figure 4), such that when the heat plate fins are placed in their 'typical' prior art location underneath the circuit board they continue to point down as shown in Figure 4. Uekusa discloses claims 6 and 9 of the '842 patent obvious. The purported invention of rotating the LED ninety degrees using an L-shape fastener while keeping a circuit board (motherboard 50) in the original orientation. A POSITA would have understood that heat sink fins would 'typically' be located underneath the circuit board (motherboard 50) as taught by the AAPA, rendering claims 6 and 9 of the 842 Patent obvious.") (internal citations omitted).

181. As discussed above in §IX.A, Dr. Baker fails to appreciate that the "L-shaped" structure he identified in Uekusa is a resin structure that is not a fastener, as resin forming section 37 does nothing to attach Uekusa's LED to the circuit board or provide any surfaces by which other components may attach. In the industry, a "lead frame" is a metal construct and the external surface is used to attach the LED package to a circuit board using solder, and lead frames greatly different from the structure of Uekusa. Further, and as discussed above in §IX.C, Uekusa's structure does not transfer any amount of heat from the LED, so a POSITA would have had no motivation to place the heat dissipating plates on the motherboard.

182. A person of ordinary skill in the art, looking at AAPA and Uekusa, would not combine them in the way argued by Dr. Baker. Instead, that person of ordinary skill would get the following structure, where the location of heat sink fins was driven by a desire to manage the temperature of the LED, and the heat sink fins would be thermally connected to the LED chip 34 by a direct thermal contact through the upright portion:

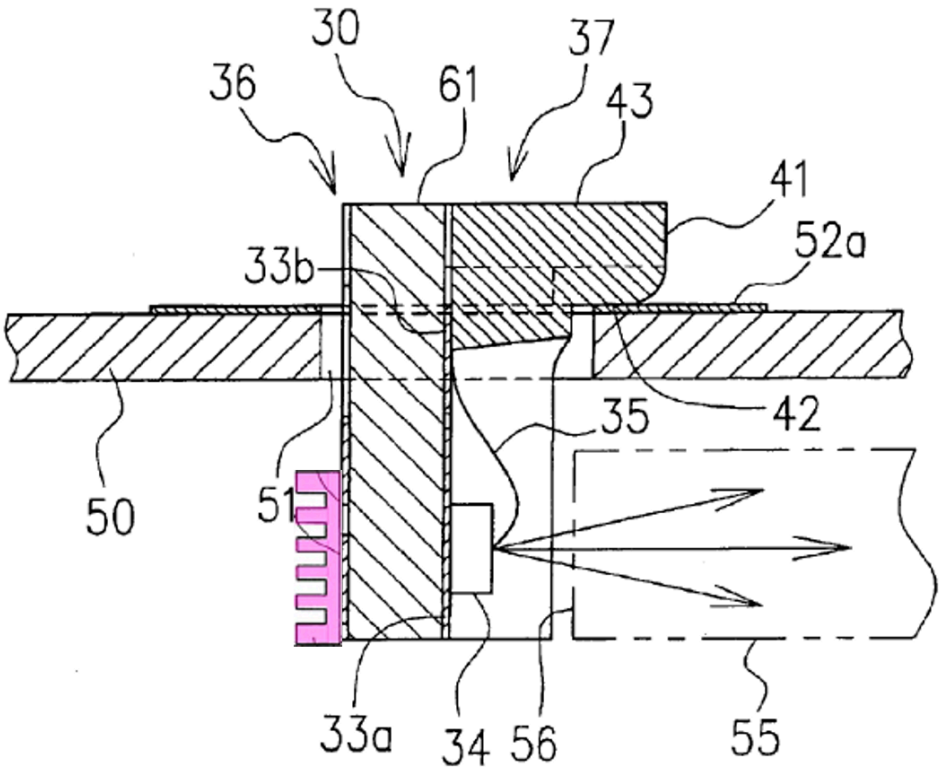

Ex. 1008, Fig. 3 (annotated).

183. Dr. Baker's placement of heatsinks is divorced from any of the teachings or Uekusa or AAPA, and there is no support for his hindsight-based application of the prior art.

184. Further, claim 6 depends from claim 3, which recites "a first fastener having a first portion and a second portion, the first portion disposed adjacent to the first side of the light guiding plate, wherein the first portion and the second portion are arranged in a substantially perpendicular relationship to form a substantially L-shaped structure." Ex. 1001, 4:40-45. Claim 9 depends from claim 7, which recites "a first fastener having a first portion and a second portion, the first portion extending along the first side of the light guiding plate, and the second portion extending above the light guiding plate wherein the first portion and the second portion are arranged in a substantially perpendicular relationship to form a substantially L-shaped structure." Ex. 1001, 4:64-5:3. As discussed above in §IX.A, Uekusa does not disclose an L-shaped fastener and AAPA does not either, so no combination of Uekusa and AAPA renders obvious any of the claims of the '842 Patent.

185. I was actively working with customers to develop LED backlighting solutions in the display market during the time frame of the priority date of the patent. It is from this basis that I am able to opine that the combination of Uekusa and AAPA does not render either claim 6 or claim 9 of the '842 Patent obvious.

XII. Challenge 4: The Petition's Anticipation Theory Based on Kurokawa Fails to Disclose All Elements of Claims 5-9

186. As an initial matter, there are clear contradictions between the approaches of Kurokawa and the '842 Patent. The '842 Patent states "[t]he present invention generally relates to the packaging of light-emitting device backlights. In

particular, the present invention relates to a light-emitting device backlight package which requires minimal space while producing maximum luminosity." Ex. 1001, 1:7-11. In contrast, Kurokawa uses standard surface mount LEDs that emit light in a direction perpendicular to the circuit board on which they are mounted and requires the circuit board itself to be bent. This is an entirely different approach and would have separate use cases from the scope of the '842 Patent—for example, the bend in Kurokawa's PCB limits the ability of the PCB to continue extending in a horizontal direction and would be an endpoint for the circuit board, as may be seen in the annotated figures below, which I have reproduced from the POPR. *See* POPR at 16 (comparing Ex. 1001, Fig. 4, with Ex. 1004, Fig. 2):

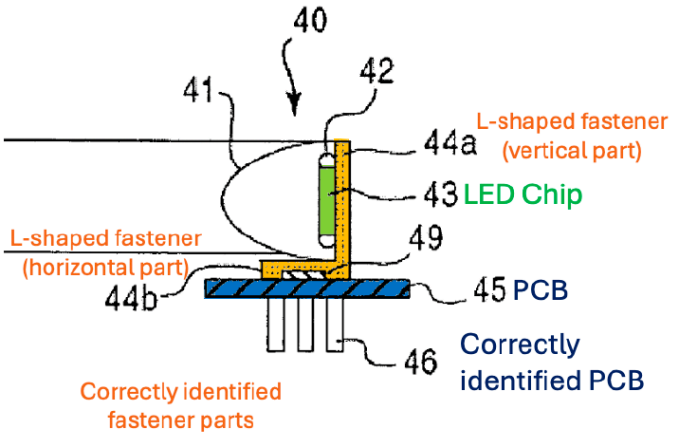

Fig.4

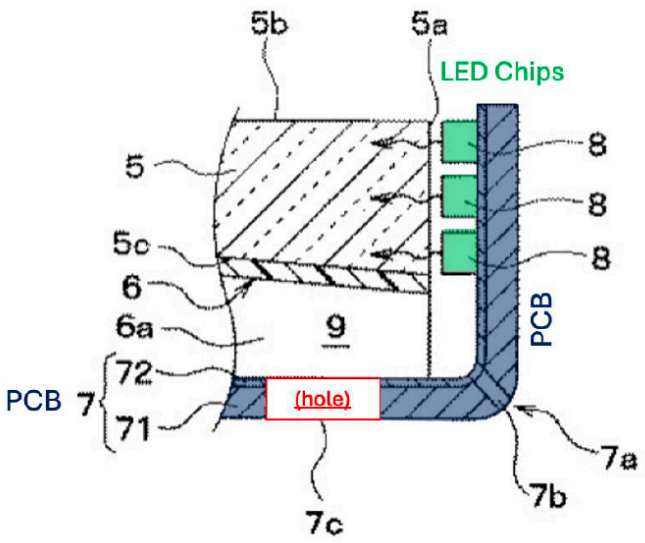

A. No L-shaped Fastener (all claims)

187. Independent claims 3 recites "a first fastener having a first portion and a second portion, the first portion disposed adjacent to the first side of the light guiding plate, wherein the first portion and the second portion are arranged in a substantially perpendicular relationship to form a substantially L-shaped structure; and a light emitting device disposed on the first portion of the first fastener for emitting a light toward the light guiding plate." Ex. 1001, 4:40-45. Independent claim 7 recites a similar element. Ex. 1001, 4:64-5:3. Nothing in Kurokawa discloses these elements, as there is no fastener, just a PCB that is itself bent at an angle with the LEDs disposed directly on the circuit board itself, not on a first portion of a first fastener. Petitioner and its expert point to the circuit board itself as being both the first portion and second portion of the L-shaped fastener. See Petition at

54, 59. A POSITA would have immediately understood that Kurokawa does not map to the language of the claims.

188. Further, the dependent claims are not obvious for the same reasons and for the additional elements recited therein.

189. Dependent claim 5 further highlights the deficiencies of attempting to map Kurokawa, as it recites a "backlight package as claimed in claim 3, further comprising a circuit board and a conducting wire, the circuit board connecting the second portion, and the conducting wire electrically coupling the light emitting device to the circuit board." Ex. 1001, 4:51-55. Independent claim 7 recites similar elements. Ex. 1001, 5:4-9. Petitioner's proposed mapping relies on wiring board 7 to act as both the circuit board and the fastener, which a POSITA would not have thought, as it requires bending the PCB itself. This is wholly inconsistent with the term "fastener," as it plainly does not meet the construction "one feature whose primary purpose is to attach something."

190. I have reviewed Patent Owner's Preliminary Response (POPR) and agree with the arguments therein with respect to Kurokawa. *See* POPR at 15-19. I have reviewed the Institution Decision and agree with the Board's initial position that Kurokawa's printed wiring board 72 cannot satisfy both the L-shaped fastener and circuit-board limitations of claim 5.

191. Dr. Baker relies on a complex and convoluted analysis to identify a corresponding structure in Kurokowa and identifies two alternative structures that he contends are L-shaped fasteners with the use of hindsight:

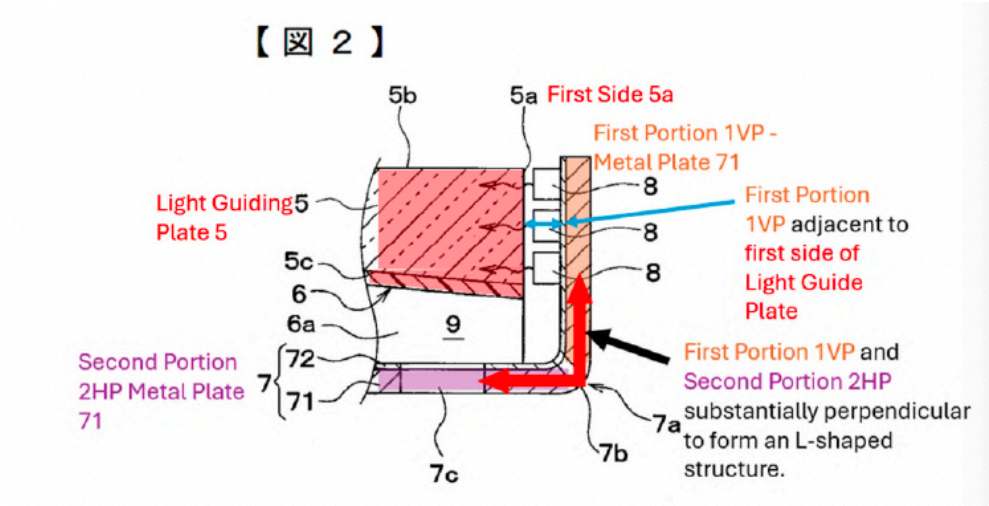

Petition, p. 51 (annotated Kurokawa Fig. 2).

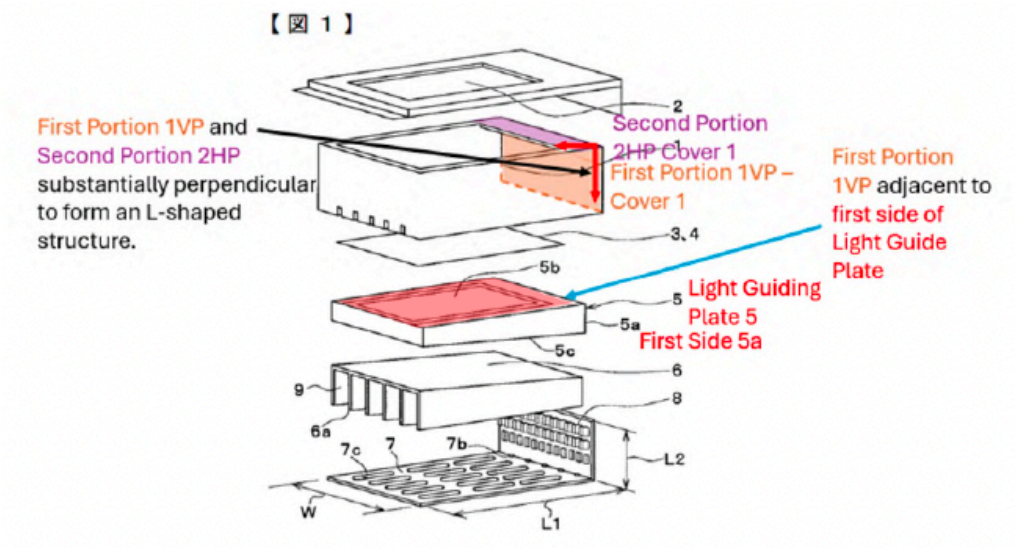

Petition, p. 52 (annotated Kurokawa Fig. 1).

192. Dr. Baker identifies Kurokowa's metal plate as the '842 Patent's L-shaped structure with a first and second portion. Ex. 1002, ¶66 ("Kurokawa discloses

'a first fastener (metal plate 71) having a first portion (1VP) and a second portion (2HP), the first portion disposed adjacent to the first side (5a) of the light guiding plate (5), wherein the first portion and the second portion are arranged in a substantially perpendicular relationship to form a substantially L-shaped structure.'"). I've reproduced the corresponding annotated Fig. 2 of Kurokowa below:

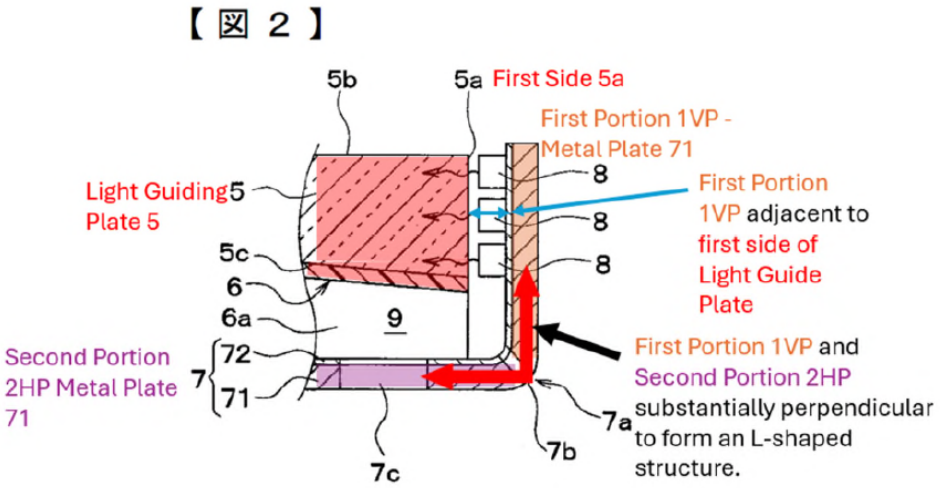

193. I disagree that a POSITA would understand that Kurokawa's metal plate corresponds with the fastener of the '842 Patent—they would have understood it to be a metal PCB. First, Kurokawa teaches that LED packages are mounted on a printed wiring board (circuit board). Ex. 1004, ¶[0023] ("Here, if the flexible printed wiring board (72) is to be provided on the entire surface of the printed wiring board (7), electronic components other than the light emitting diodes (8) can be mounted on the portion of the flexible printed wiring board (72)"). Clearly, the LED chips are disposed directly on the circuit board, not the fastener. This fails to meet the

element recited similarly by independent claims 3 and 7, "a light emitting device disposed on the first portion of the first fastener for emitting a light toward the light guiding plate." *See* Ex. 1001 4:46-49, 5:4-6. Thus, these claim elements are not met and Kurokawa does not anticipate independent claims 3 or 7, and the rest of the challenged claims are not anticipated for the same reasons and due to the additional features recited therein.

194. Second, Kurokawa further teaches that the printed wiring board is bonded to the metal plate. Ex. 1004, ¶[0038] ("The flexible printed wiring board 72 and the metal plate 71 may be made to adhere to each other by bonding them with an adhesive, or by thermocompressing the insulating layer of the flexible printed wiring board 72 to the metal plate 71."). Indeed, the Kurokawa details that this is simply an alternate manufacture of a "metallic circuit board," and is directed towards a metal PCB, not a fastener having a first portion and a second portion as claimed by the '842 Patent. *See* Ex. 1004, [0060].

195. A POSITA understood that the metal plate of Kurokawa identified by Dr. Baker cannot be the fastener of the '842 patent because it is not a part of the LED package—rather, Kurokawa relies on bending the circuit board itself. Thus, Dr. Baker's opinion is inconsistent with the clear teachings of the specification and the plain language of the claims and is based on hindsight.

196. Even ignoring this, the '842 Patent explicitly states that the goals of the invention include "a light emitting device backlight package having a fastener of a novel shape, which provides a first surface to which a chip and light emitting device module attach, while also providing a second surface for attachment of a second fastener, or a PCB." Ex. 1001, 2:30-35. Dr. Baker's identified fastener lacks an attachment for an LED of any kind, whether it be an LED chip or and LED package. Dr. Bakers identified structure only serves as a mounting location for a circuit board.

197. For at least these reasons, a POSITA clearly understands that Kurokawa is does not anticipate "a first fastener having a first portion and a second portion, the first portion disposed adjacent to the first side of the light guiding plate, wherein the first portion and the second portion are arranged in a substantially perpendicular relationship to form a substantially L-shaped structure; and a light emitting device disposed on the first portion of the first fastener for emitting a light toward the light guiding plate," as recited by claim 3 or similarly recited by claim 7. Ex. 1001, 4:40-45, 4:64-5:3.

198. Further, Kurokawa does not anticipate the additional limitations of claim 5, which depends from claim 3 and recites a "backlight package as claimed in claim 3, further comprising a circuit board and a conducting wire, the circuit board connecting the second portion, and the conducting wire electrically coupling the light emitting device to the circuit board" because it points to wiring board 7 as being

both the claimed fastener and the circuit board, which is not something that a POSITA would do. Ex. 1001, 4:51-55. A POSITA would understand wiring board 7 to be a PCB, not a fastener, as bending a PCB is different technique from using a fastener.

199. Additionally, Dr. Baker's alternate construction that Kurokawa's cover 1 is an L-shaped fastener is an absurd, hindsight-based mapping to an object that no POSITA would have considered to be a fastener. *See* Petition, p. 52 (annotated Kurokawa Fig. 1 reproduced below):

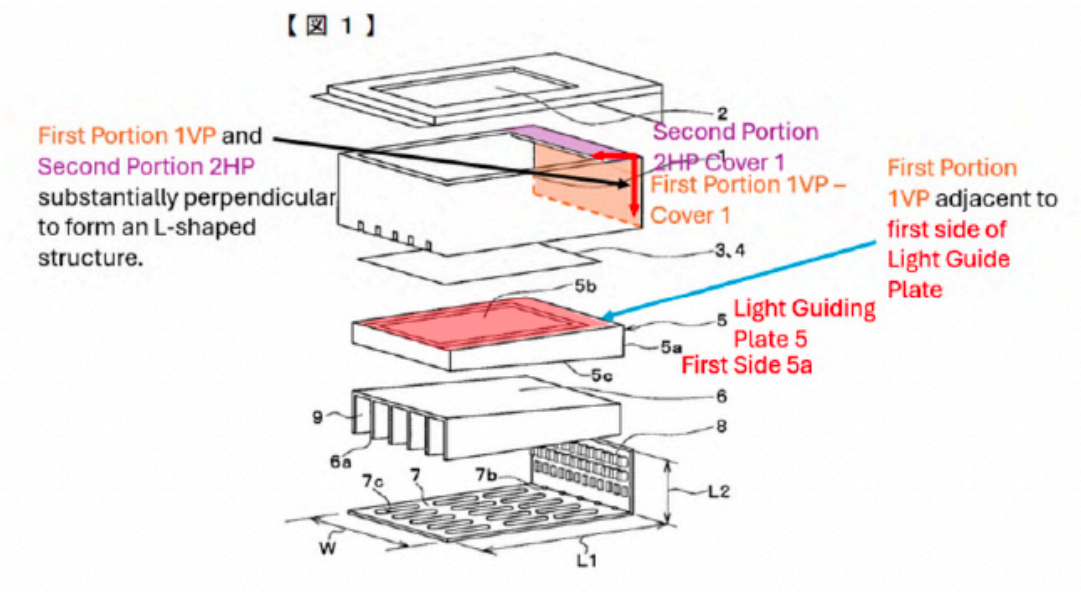

B. No Heat Dissipating Means (Claims 6 and 9)

200. I note that Dr. Baker's analysis of the thermal dissipation pathways of Kurokawa is incorrect. Dr. Baker naively assumes that Kurokawa's metal plate housing acts as a single efficient means of heat dissipation for the LEDs. For

reference I have reproduced the annotated version of Fig. 2 of Kurokawa above paragraph 185 of Dr. Baker's report below.

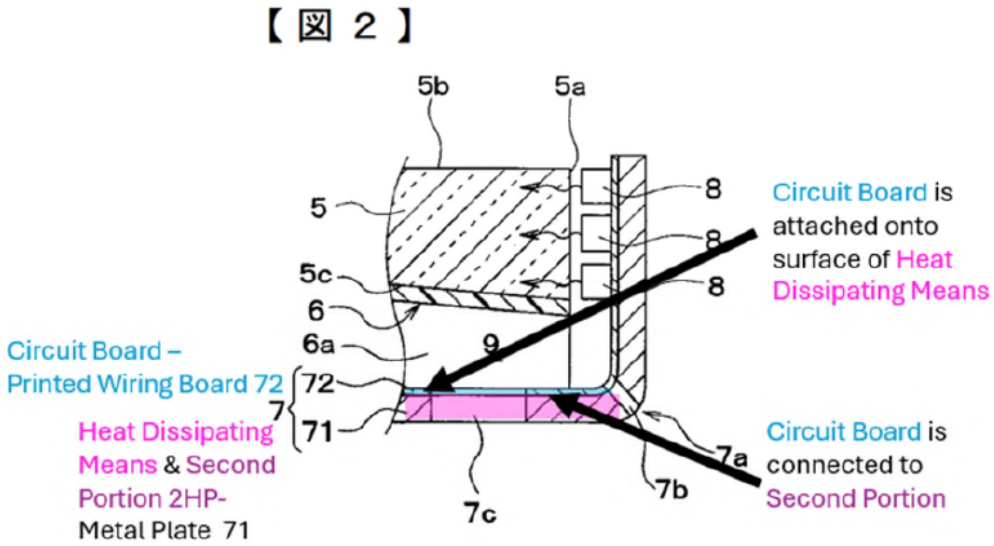

201. Dr. Baker opines "As shown above with respect to claim 5 and above in annotated Figure 2, Kurokawa discloses printed wiring board (72) connecting metal plate 71, including, specifically, portion 2HP. Kurokawa discloses metal plate 71 is a heat dissipating means made of aluminum, copper, and iron, and that aluminum is particularly advantageous with respect to heat dissipating properties." Ex. 1002, ¶185 (citations omitted).

202. Dr. Baker appears to ignore fundamental aspects of heat dissipation in forming his opinion. First it is important to note that the LEDs are adjacent to an exterior wall and that heat only need travel a small distance to reach the exterior environment where it can be dissipated via both convection and radiation. Importantly for radiative heat transfer, the view factor will be essentially 1.0 and

since radiative heat transfer scales as absolute temperature to the 4th power, it will be relatively efficient. Convective heat transfer will also be occurring at a rate proportional to the temperature difference between the exterior of the device and the ambient temperature.

203. The combination of these two heat transfer mechanisms means that the further one travels from the location of the LEDs, the lower the wall temperature will drop. This drop will be due to a combination of heat transferred to the ambient environment and the lateral (or spreading) heat resistance through the metal housing. As a result, the heat dissipation through what Dr. Baker identified as the second portion is likely to be minimal or may even be non-existent. Regardless, a POSITA would not expect the heat transfer from Dr. Baker's identified second portion to have any significant effect on the operation of the LEDs. This is shown schematically in the annotated version of Fig. 2 of Kurokawa reproduced below where the color of the arrows I have added relates to the relative temperature.

[Fig. 2]

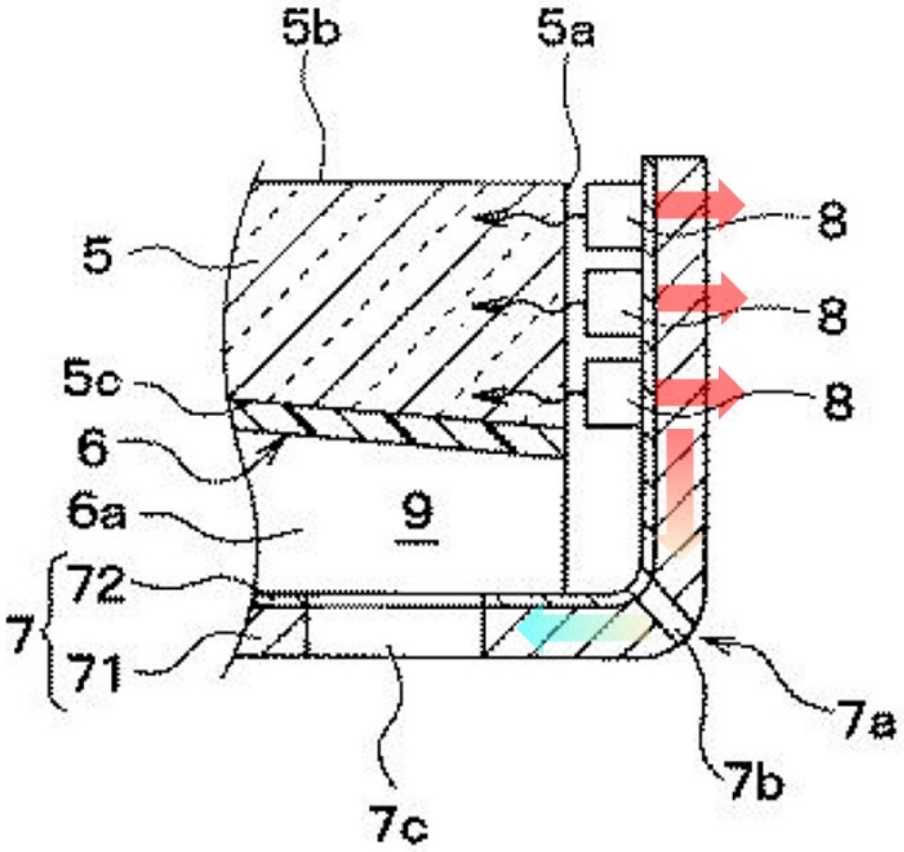

204. Dr. Baker makes yet another comment regarding heat dissipation from other electrical components that highlights his lack of experience with thermal design and thermal management principles. Ex. 1002, ¶189 ("A POSITA would have understood that those other electronics, such as LED drivers and resistors, would also produce heat. A POSITA would have understood that the heat produced by those electronics would be dissipated into the air in heat dissipation space (9) along with the heat from LEDs 8. A POSITA would also have understood that the heat produced by those electronics would also have been conducted via board 72 to

metal plate 71, particularly portion 2HP of metal plate 71, and then conducted and dissipated by metal plate 71. A POSITA would have understood that heat would have been sunk from those electronic components in the same manner as heat from the LEDs and for precisely the same reasons. A POSITA would have understood, based on the laws of thermodynamics, that heat will always be conducted (and thereby dissipated) from hotter to cooler portions. Thus, the heat from a localized source, such as a particular driver or resistor on board 72, will be conducted and dissipated to any cooler portions of the structures around it, including heat dissipation space 9, board 72, and plate 71.").

205. For reference, I have reproduced Fig. 1 of Kurokawa below. While Dr. Baker is correct that the Laws of Thermodynamics teach that heat flows from areas of high temperature to lower temperature, a POSITA would not consider heat to be dissipated merely because it has been transferred to a region of lower temperature. Dissipation of heat refers to transfer of heat to the ambient environment, more specifically the heat has been transferred to the ambient temperature, not just any lower temperature. Ex. 2018 at 1.

[Fig. 1]

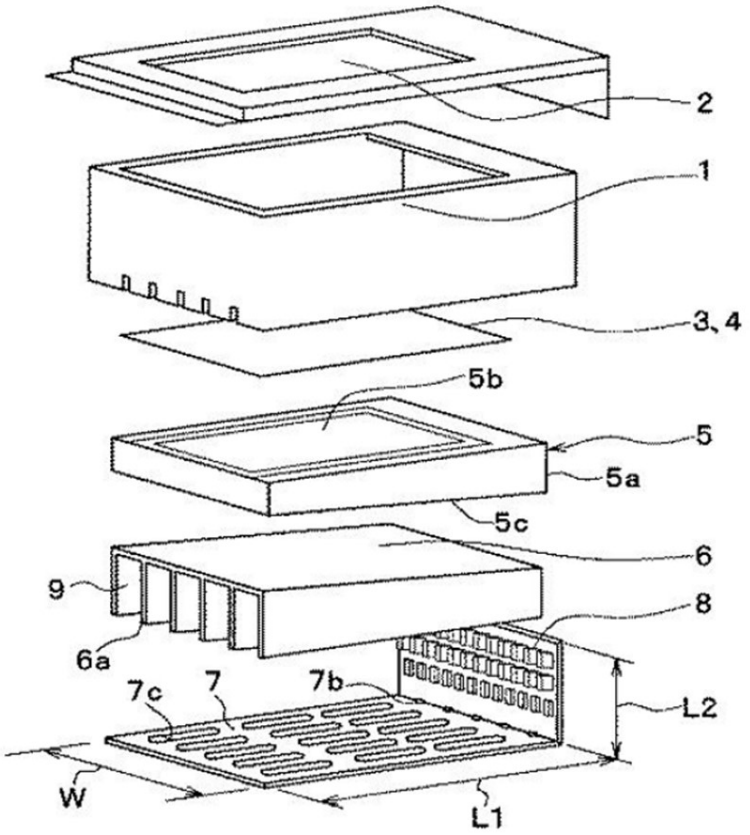

206. The most troubling aspect of Dr. Baker's statement is the implication of heat dissipation space 9 being used as a heat sink. Ex. 1002, ¶190 ("A POSITA would have understood that the heat produced by those local heat sources will be sunk through the air space 9, board 72, and portion 2HP of metal plate 71."). Neither would ribs 6a act as a heat dissipating means. *See* Petition, p. 65.

207. The propositions that ribs 6a and space 9 act as a heatsink is problematic because it would result in the transfer of heat ***into*** the device, ***away*** from the periphery which means that would result in an increase in the operating temperature

of all components inside the device, including the LEDs. The express job of a thermal management engineer is to dissipate heat—to disperse it away from a device, not to direct it into a device. A competent thermal designer would not design a heatsink that directs heat into a device, especially when sensitive components like LEDs are involved. Dr. Baker's citation of the passage is yet another indication of his unfamiliarity with the topic of thermal management.

1. Claim 3

208. Claim 3: For the reasons discussed above in §XII.A, it is my opinion that Kurokowa fails to anticipate at least claim element 3[b], which recites "first fastener having a first portion and a second portion, the first portion disposed adjacent to the first side of the light guiding plate, wherein the first portion and the second portion are arranged in a substantially perpendicular relationship to form a substantially L-shaped structure" because the Petition improperly identifies Kurokawa's PCB as being a fastener. Further, Kurokowa fails to anticipate at least claim element 3[c], which recites "a light emitting device disposed on the first portion of the first fastener for emitting a light toward the light guiding plate" because Kurokawa's LED is disposed directly on the PCB, which is itself bent and is not a fastener.

2. Claim 5

209. Claim 5: For the reasons discussed above in §XII.A, it is my opinion that Kurokowa fails to anticipate claim 5 due to its dependence from claim 3. Further, Kurokawa does not anticipate the additional elements of claim 5, including a "backlight package as claimed in claim 3, further comprising a circuit board and a conducting wire, the circuit board connecting the second portion, and the conducting wire electrically coupling the light emitting device to the circuit board" at least because it points to the wiring board 7 as both the claimed fastener and the claimed circuit board.

3. Claim 6

210. Claim 6: Claim 6 depends from claim 3 and is not anticipated by Kurokawa for the same reasons discussed in claim 3. Additionally, claim 6 recites a "backlight package as claimed in claim 3, further comprising a circuit board and a heat dissipating means, the circuit board connecting the second portion, and the heat dissipating means attached onto the surface of the circuit board for conducting a heat generated thereon" and Kurokawa does not disclose a heat dissipating means in accordance with the claim for the reasons discussed in §XII.B.

4. Claim 7

211. Claim 7: For the reasons discussed above in §XII.A, it is my opinion that Kurokowa fails to anticipate at least claim elements 7[b], 7[c], 7d, and 7e of the '842 Patent. Kurokawa does not disclose claim 7[b], which recites "a first fastener

having a first portion and a second portion, the first portion extending along the first side of the light guiding plate, and the second portion extending above the light guiding plate wherein the first portion and the second portion are arranged in a substantially perpendicular relationship to form a substantially L-shaped structure" because Kurokawa at least does not have a first fastener, only a wiring board. Further, element 7[c] recites "a light emitting device disposed on the first portion of the first fastener for emitting a light toward the light guiding plate" and Kurokawa's LED is disposed on the wiring board (*e.g.*, the circuit board), not on a fastener. Element 7[d] recites "a circuit board connecting the second portion of the first fastener" and Petitioner points to portions of the wiring board 7 as being both a fastener and a circuit board, which a POSITA would not do. Claim element 7[e] recites "a conducting wire electrically coupling the light emitting device to the circuit board," and Petitioner points only to an electrode printed on the PCB, which a POSITA would not do.

5. Claim 8

212. Claim 8: Claim 8 depends from claim 7, so Kurokawa does not anticipate claim 8 for at least the same reasons as discussed in claim 7. *See* §XII.A.

6. Claim 9

213. Claim 9: Claim 9 depends from claim 7 so Kurokawa does not anticipate claim 9 for at least the same reasons as discussed in claim 7. *See* §XII.A.

Further, claim 9 recites a "further comprising a heat dissipating means attached onto the surface of the circuit board for conducting a heat generated thereon" and Kurokawa does not disclose a heat dissipating means in accordance with the claim for the reasons discussed in §XII.B.

214. Accordingly, Kurokawa fails to anticipate the challenged claims.

XIII. Challenge 5: The Petition's Obviousness Theory Based on Kurokawa Fails to Disclose All Elements of Claims 7-9

215. As discussed above in §XII.A, Kurokowa discloses bending wiring board 7 and does not to teach or suggest using a fastener. It is my opinion that the only way one could reach the language of the claims from the teachings of Kurokawa is with the use of impermissible hindsight, as Kurokawa teaches a different method (*e.g.*, bending the PCB itself) rather than using a fastener, as claimed by the '842 Patent.

1. Claim 7

216. Claim 7: For the reasons discussed above in §XII.A, it is my opinion that Kurokowa fails to render obvious at least claim elements 7[b], 7[c], 7d, and 7e of the '842 Patent. Kurokawa does not disclose claim 7[b], which recites "a first fastener having a first portion and a second portion, the first portion extending along the first side of the light guiding plate, and the second portion extending above the light guiding plate wherein the first portion and the second portion are arranged in a substantially perpendicular relationship to form a substantially L-shaped structure"

because Kurokawa at least does not have a first fastener, only a wiring board. Further, element 7[c] recites "a light emitting device disposed on the first portion of the first fastener for emitting a light toward the light guiding plate" and Kurokawa's LED is disposed on the wiring board (*e.g.*, the circuit board), not on a fastener. Element 7[d] recites "a circuit board connecting the second portion of the first fastener" and Petitioner points to portions of the wiring board 7 as being both a fastener and a circuit board, which a POSITA would not do. Claim element 7[e] recites "a conducting wire electrically coupling the light emitting device to the circuit board," and Petitioner points only to an electrode printed on the PCB, which a POSITA would not do.

2. Claim 8

217. Claim 8: Claim 8 depends from claim 7, so Kurokawa does not render claim 8 obvious for at least the same reasons as discussed in claim 7. *See* §XII.A.

3. Claim 9

218. Claim 9: Claim 9 depends from claim 7 so Kurokawa does not render claim 9 obvious for at least the same reasons as discussed in claim 7. *See* §XII.A. Further, claim 9 recites a "further comprising a heat dissipating means attached onto the surface of the circuit board for conducting a heat generated thereon" and Kurokawa does not disclose a heat dissipating means in accordance with the claim for the reasons discussed in §XII.B.

XIV. Challenge 6: The Petition's Obviousness Theory Based on Kurokawa and Isoda Fails to Disclose All Elements of Claims 5-9

A. Isoda Does Not Cure the Deficiencies of Kurokawa

219. Isoda does not teach or suggest an L-shaped fastener, so no combination of Isoda or Kurokawa cures Kurokawa's lack of a fastener, as explained above in §XII.A. *See also* Ex. 1005.

B. Hindsight: A POSITA Would Not Be Motivated to Combine Kurokawa and Isoda

220. As an initial matter, Kurokawa's PCB is made of metal, and Isoda specifically states, "***if the print substrate is made with a metal having high heat conductivity, the heat radiation problem is resolved***." Ex. 1005, 2:1-3; *see* Ex. 1004, ¶[0010] ("Because a metallic wiring board is used as the printed wiring board (7), the thermal conductivity of the printed wiring board (7) can be improved compared to that of a glass epoxy-based wiring board."). Accordingly, there is no motivation to combine Isoda and Kurokawa based on the explicit teachings of the references themselves.

221. Further, in my opinion, Kurokowa and Isoda are not related fields of art and a POSITA would not be motivated to combine the references. As discussed above, Isoda teaches a method of LED package construction. More specifically, Isoda teaches construction of LED packages with metal base members that protrude through a circuit board, thereby allowing heat sinks or cooling fins to be directly attached to the LED packages.

222. In contrast, Kurokowa uses standard surface mount LED packages that are mounted directly to the PCB, which is itself bent. As such, the LED package modifications taught by Isoda would be useless and would interfere with the construction of the device of Kurokowa.

223. Ignoring these fundamental issues, a POSITA would not attempt the combination proposed by Dr. Baker and would not have any reasonable expectation of success. Rather a POSITA would expect failure.

224. Below I have reproduced the Kurokawa and Isoda combined demonstrative figure prepared by Dr. Baker.

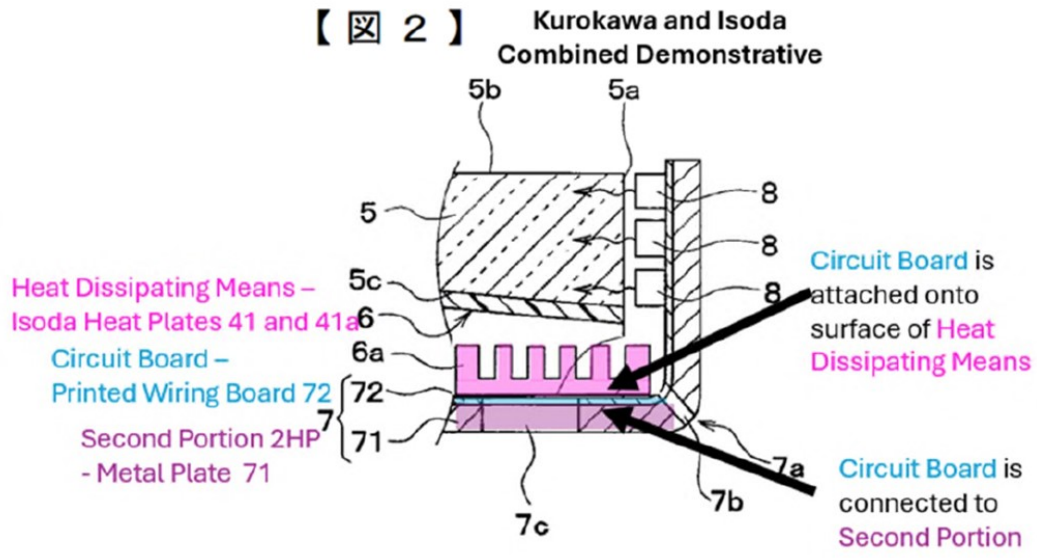

225. Dr. Baker opines "It would have been obvious for a POSITA to combine Kurokawa's teachings related to LCD backlight devices utilizing LEDs with Isoda's teachings of enhanced heat dissipation methods by placing heat dissipating fins as disclosed in Isoda on the Kurokawa's board 72 to enhance heat

dissipation into Kurokawa's air space 9. An exemplary, obvious implementation is shown above in Kurokawa and Isoda Combined Demonstrative." Ex. 1002, ¶219; *see also id.* ¶220 ("A POSITA would have been motivated to enhance the heat dissipation provided by Kurokawa based on Kurokawa's express teaching that active cooling, such as a fan, might be required. Thus, a POSITA would have known from Kurokawa's teachings that the passive cooling of Kurokawa's arrangement may not have been sufficient and would have looked for ways to enhance passive heat cooling to avoid the use of a fan, which can be noisy, expensive, and take up additional room. And even if active cooling were still used, a POSITA would have been motivated to explore ways to enhance heat dissipation to reduce the requirements for a fan resulting in a smaller, less expensive, fan that could run less often or at lower speeds to reduce noise and power consumption.").

226. Although Dr. Baker acknowledges that a POSITA would be aware that Kurokowa's arrangement may not have been sufficient hand would have looked for ways to enhance passive heat cooling, his solution (adding fins inside Kurokawa's housing) clearly further demonstrates that he is not a POSITA—his proposed configuration significantly ***hinders*** passive heat transfer (natural convection).

227. A POSITA viewing Dr. Baker's proposed combination of Kurokowa and Isoda would be appalled at the approach as it would be immediately seen as a naïve effort to maximize surface area at the expense of other factors. Critically, the

increase in surface area would be significantly and detrimentally be impacted by an enormous decrease in air flow due to the tremendous increase in surface area—indeed, the proposed structure is even depicted covering ventilation hole 7c. This would impose increased drag forces on any air flow inside the device of Kurokawa and hence significantly decrease convective heat dissipation. Even worse, Dr. Baker aligned the fins perpendicular to the long axis of Kurokawa's device, an orientation which maximizes the resistance to air flow.

228. Worse, the fin structure would serve to conduct heat towards and retain heat in the interior of the device, exactly contrary to the goals and desires of a POSITA. This would increase the operating temperature of the device, including the area surrounding the LEDs. This would reduce the efficiency (and light output) of the LEDs and shorten the operating life of all electronic components.

229. Rather than enhancing passive cooling, Dr. Baker's proposed combination of Kurokawa and Isoda would significantly decrease passive cooling and would in fact significantly increase the energy required to operate the device as a rather large or at least powerful fan would be needed to force air through the modified device. The result of Dr. Baker's proposed combination of Kurokawa and Isoda is predictable—it would be worse performing and thus is a strong motivation for a POSITA **not** to combine the references.

230. A POSITA seeking to improve the thermal design of Kurokowa would add fins directly opposite the LEDs and eliminate the metal bottom of Kurokowa. Doing so would reduce the amount of metal, saving weight and cost and maximize heat transfer to the ambient environment.

1. Claim 3

231. Claim 3: For the reasons discussed above in §§XIV.A and XIV.B, it is my opinion that the combination of Kurokawa and Isoda fails to render obvious claim elements 3[b] and 3[c] of the '842 Patent. Specifically, claim 3[b] recites "first fastener having a first portion and a second portion, the first portion disposed adjacent to the first side of the light guiding plate, wherein the first portion and the second portion are arranged in a substantially perpendicular relationship to form a substantially L-shaped structure" and neither Kurokawa or Isoda disclose an fastener, much less an L-shaped fastener as claimed. Further, claim 3[c] recites "a light emitting device disposed on the first portion of the first fastener for emitting a light toward the light guiding plate" and neither Kurokawa or Isoda disclose an LED disposed on the first portion of a fastener. Additionally, the references themselves teach away from the combination, as I noted above in §XIV.B. Thus, in my opinion, claim 3 is not obvious over Kurokawa and Isoda.

2. Claim 5

232. Claim 5: Claim 5 depends from claim 3 and is not obvious for the same reasons as claim 3. Further, claim 5 recites "a "backlight package as claimed in claim 3, further comprising a circuit board and a conducting wire, the circuit board connecting the second portion, and the conducting wire electrically coupling the light emitting device to the circuit board" and neither Kurokawa nor Isoda disclose at least a circuit board connecting the second portion of the fastener. *See* §XII.A. Further, the references themselves teach away from the combination, as I noted above in §XIV.B. Accordingly, it is my opinion that the combination of Kurokawa and Isoda fails to render obvious claim 5 of the '842 Patent.

3. Claim 6

233. Claim 6: Claim 6 depends from claim 3 and the combination of Kurokawa and Isoda fail to render claim 6 obvious for the same reasons. *See* §§XIV.A and XIV.B. Additionally, claim 6 further recites a "backlight package as claimed in claim 3, further comprising a circuit board and a heat dissipating means, the circuit board connecting the second portion, and the heat dissipating means attached onto the surface of the circuit board for conducting a heat generated thereon" and the combination of Kurokawa and Isoda fails to render obvious claim 6 because any combination would not result in a structure having the claimed heat dissipating means. *See* §XIV.B. Further, the references themselves teach away from the combination, as I noted above in §XIV.B. Thus, it is my opinion that the

combination of Kurokawa and Isoda fails to render obvious claim 6 of the '842 Patent.

4. Claim 7

234. Claim 7: For the reasons discussed above in §§XIV.A and XIV.B, it is my opinion that the combination of Kurokawa and Isoda fails to render obvious at least claim elements 7[b] and 7[d] of the '842 Patent. Claim element 7[b] discloses "a first fastener having a first portion and a second portion, the first portion extending along the first side of the light guiding plate, and the second portion extending above the light guiding plate wherein the first portion and the second portion are arranged in a substantially perpendicular relationship to form a substantially L-shaped structure" and the combination of Kurokawa and Isoda fails to disclose the claimed first fastener, let alone the L-shape. Claim element 7[d] recites "a circuit board connecting the second portion of the first fastener" and neither Kurokawa or Isoda disclose this element, as I discuss in §§XII.A. and XIV.A. Additionally, the references themselves teach away from the combination, as I noted above in §XIV.B. Thus, it is my opinion that the combination of Kurokawa and Isoda fails to render claim 7 obvious.

5. Claim 8

235. Claim 8: Claim 8 depends from claim 7 and is not obvious for the reasons discussed with respect claim 7. Further, the references themselves teach

away from the combination, as I noted above in §XIV.B. Thus, is my opinion that the combination of Kurokawa and Isoda fail to render obvious claim 8 of the '842 Patent.

6. Claim 9

236. Claim 9: Claim 9 depends from claim 7 and is not obvious for the reasons discussed with respect to claim 7. Further, claim 9 recites a "backlight package as claimed in claim 7, further comprising a heat dissipating means attached onto the surface of the circuit board for conducting a heat generated thereon." The combination of Kurokawa and Isoda fails to render obvious claim 9 because any combination would not result in a structure having the claimed heat dissipating means. *See* §XIV.B. Further, the references themselves teach away from the combination, as I noted above in §XIV.B. Thus, it is my opinion that the combination of Kurokawa and Isoda fail to render obvious claim 9 of the '842 Patent.

XV. CONCLUSION

237. In signing this Declaration, I understand that the Declaration will be filed as evidence in contested cases before the Patent Trial and Appeal Board of the United States Patent and Trademark Office. I acknowledge that I may be subject to cross-examination in this case and that cross examination will take place within the United States. If cross examination is required of me, I will appear for cross examination within the United States during the time allotted for cross examination.

238. I declare that all statements made herein of my own knowledge are true and that all statements made on information and belief are believed to be true; and further that these statements were made with the knowledge that willful false statements and the like so made are punishable by fine or imprisonment, or both, under Section 1001 of Title 18 of the United States Code, and that such willful false statements may jeopardize the validity of the 842 Patent.

Executed on April 23, 2025 at Flower Mound, TX.

Eric Bretschneider, Ph.D.