US 20140180273A1

(19) United States

(12) Patent Application Publication

(10) Pub. No.: US 2014/0180273 A1

(43) Pub. Date: Jun. 26, 2014

Nair

(54) **DEVICE, SYSTEM, AND METHOD FOR IMAGING AND TISSUE CHARACTERIZATION OF ABLATED TISSUE**

(71) Applicant: **Volcano Corporation**, San Diego, CA (US)

(72) Inventor: **Anuja Nair**, Bedford, MA (US)

(73) Assignee: **Volcano Corporation**, San Diego, CA (US)

(21) Appl. No.: **14/137,393**

(22) Filed: **Dec. 20, 2013**

Related U.S. Application Data

(60) Provisional application No. 61/745,476, filed on Dec. 21, 2012.

Publication Classification

(51) **Int. Cl.**
A61B 18/00 (2006.01)

(52) **U.S. Cl.**
CPC *A61B 18/00* (2013.01)
USPC **606/34**

(57) **ABSTRACT**

Disclosed herein is a system for ablating and characterizing tissue. The system comprises an ablation element configured to emit ablative energy toward a tissue of interest, an imaging apparatus configured to emit energy and collect imaging data including reflected signals from the tissue of interest, and a characterization application. The characterization application comprises a signal analyzer for analyzing the imaging data and determining one or more signal properties from the reflected signals, and a correlation processor configured to associate the one or more signal properties to pre-determined tissue signal properties of different tissue components through a pattern recognition technique. The pre-determined tissue signal properties are embodied in a database, and the correlation processor is configured to identify a tissue component and an ablation level of the tissue of interest based on the pattern recognition technique.

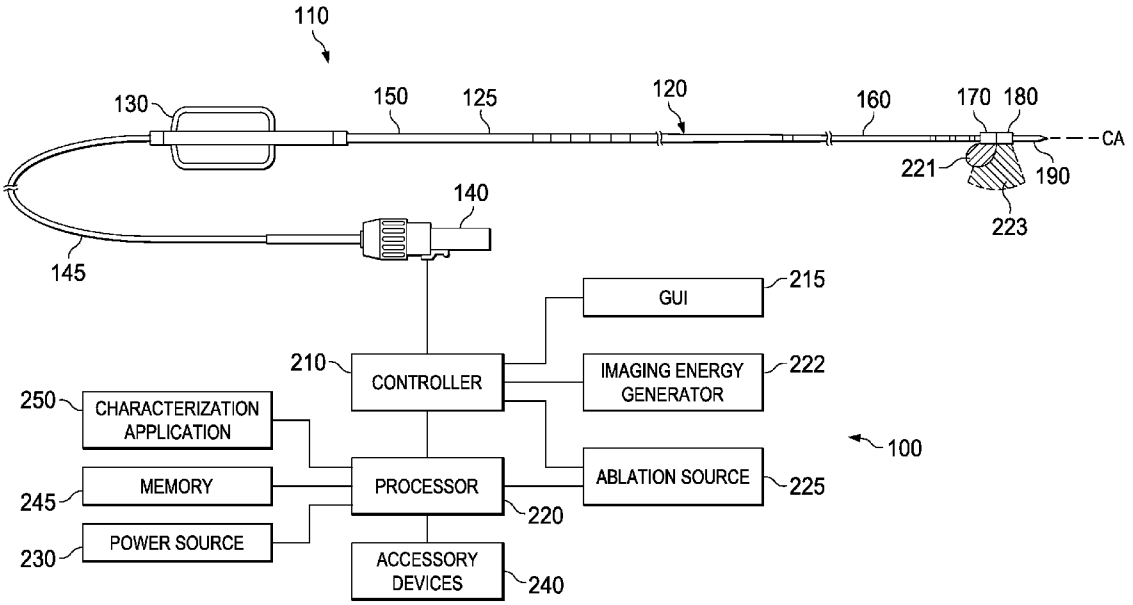

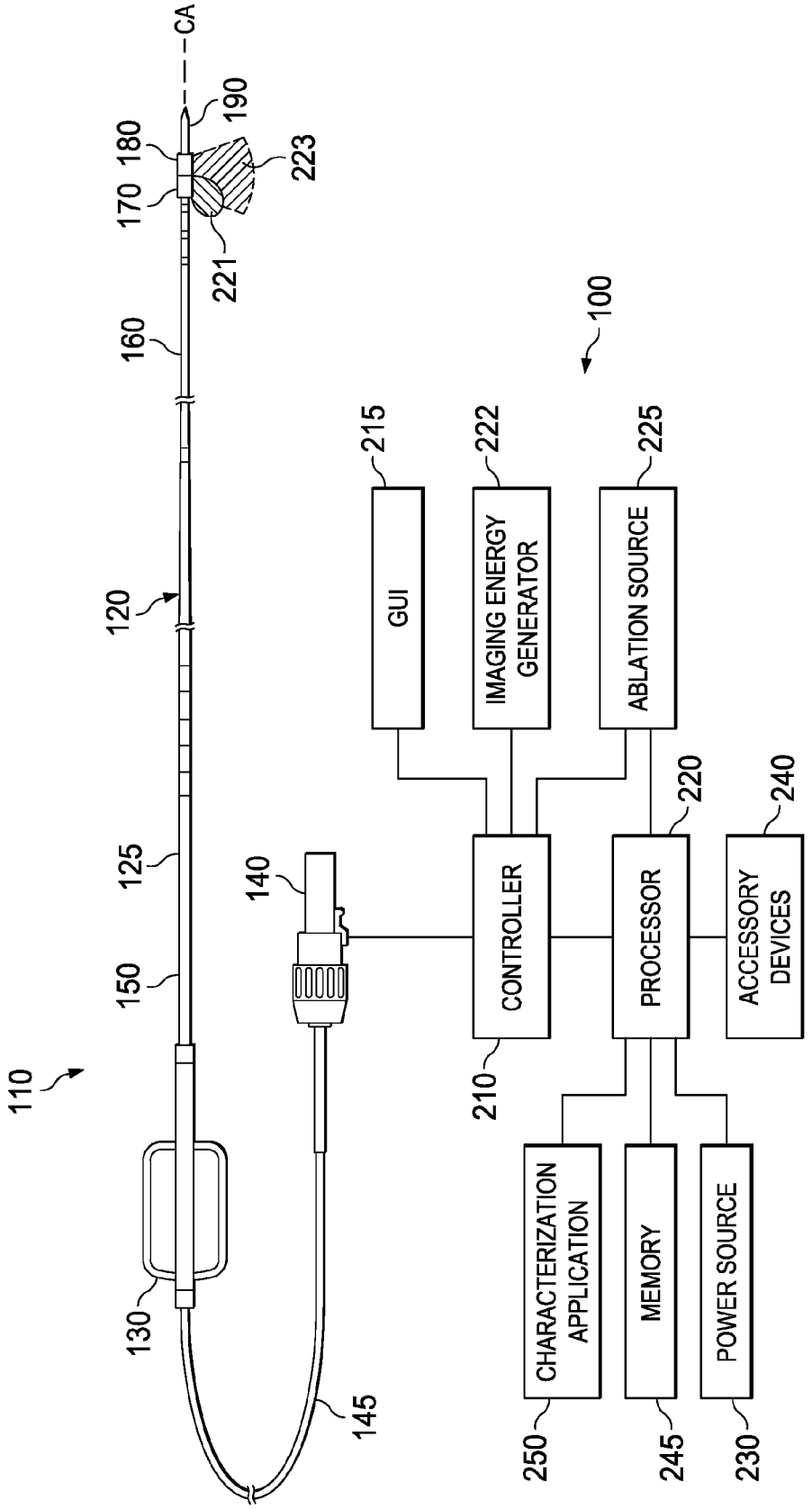
CA
190
180
223
170
221
160
100
215
222
225
GUI
IMAGING ENERGY GENERATOR
ABLATION SOURCE
120
220
240
125
140
CONTROLLER
PROCESSOR
ACCESSORY DEVICES
150
110
210
CHARACTERIZATION APPLICATION
MEMORY
POWER SOURCE
130
145
250
245
230

Fig. 1

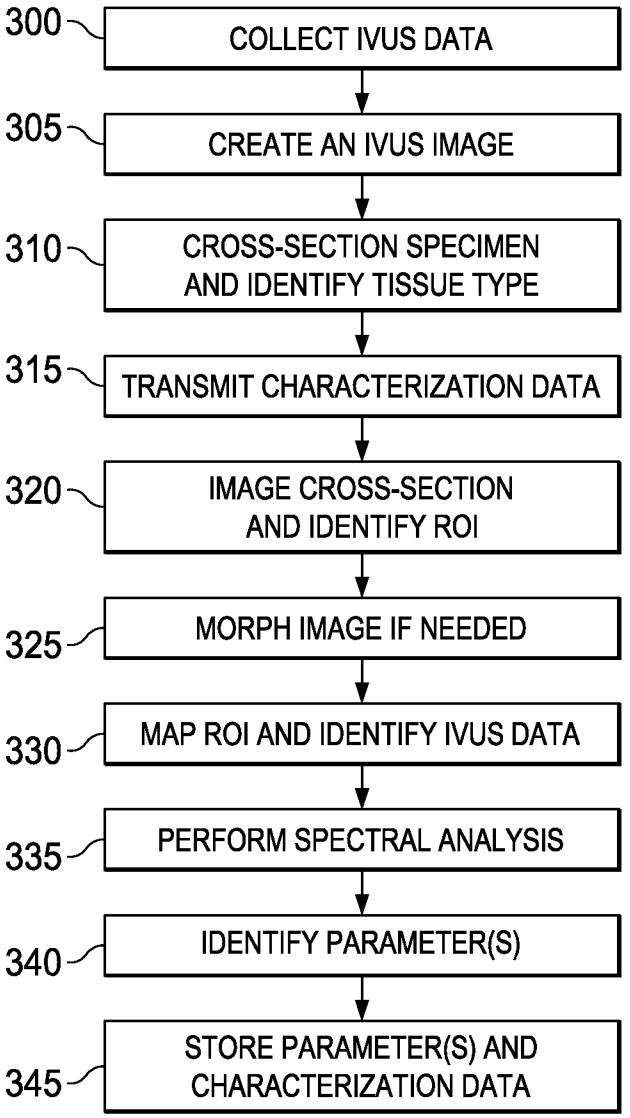
300
COLLECT IVUS DATA
305
CREATE AN IVUS IMAGE
310
CROSS-SECTION SPECIMEN AND IDENTIFY TISSUE TYPE
315
TRANSMIT CHARACTERIZATION DATA
320
IMAGE CROSS-SECTION AND IDENTIFY ROI
325
MORPH IMAGE IF NEEDED
330
MAP ROI AND IDENTIFY IVUS DATA
335
PERFORM SPECTRAL ANALYSIS
340
IDENTIFY PARAMETER(S)
345
STORE PARAMETER(S) AND CHARACTERIZATION DATA

Fig. 2

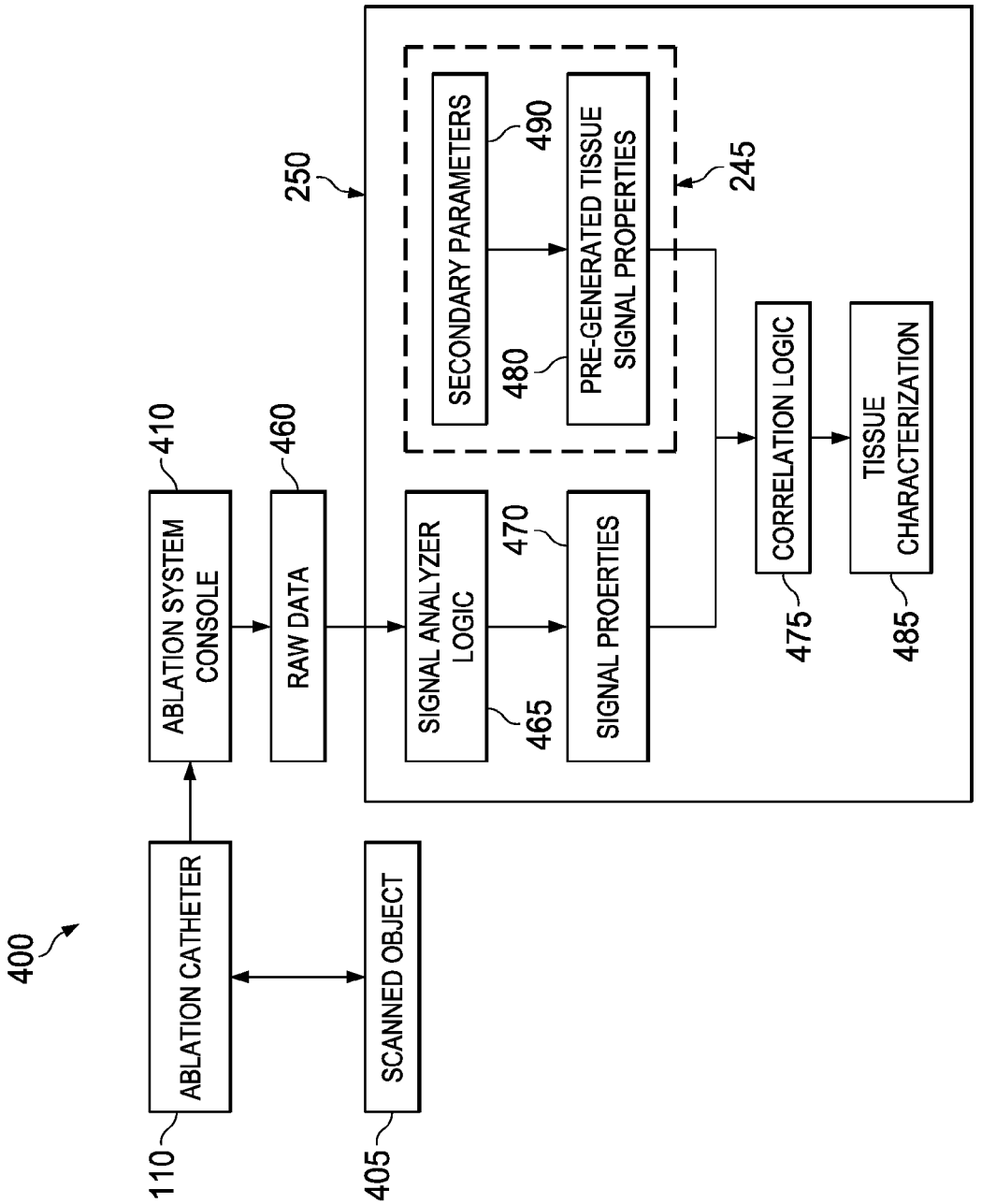
400
ABLATION CATHETER
110
SCANNED OBJECT
405
ABLATION SYSTEM CONSOLE
410
RAW DATA
460
250
SIGNAL ANALYZER LOGIC
465
SIGNAL PROERTIES
470
SECONDARY PARAMETERS
480
PRE-GENERATED TISSUE SIGNAL PROPERTIES
490
245
CORRELATION LOGIC
475
TISSUE CHARACTERIZATION
485

Fig. 3

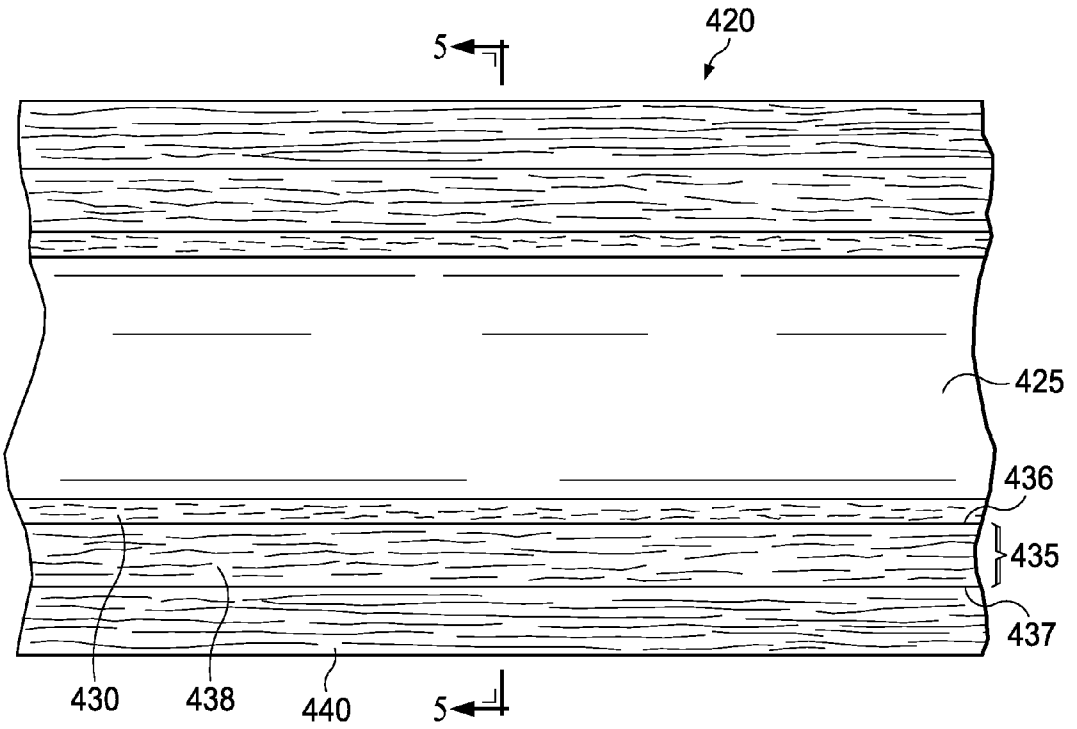

Fig. 4

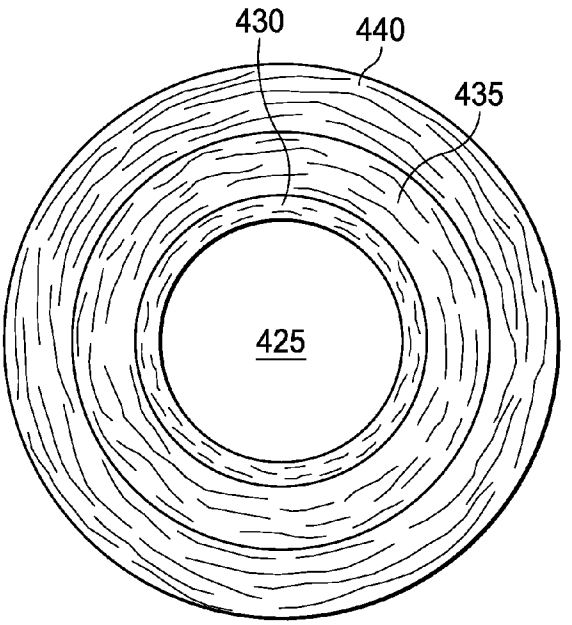

Fig. 5

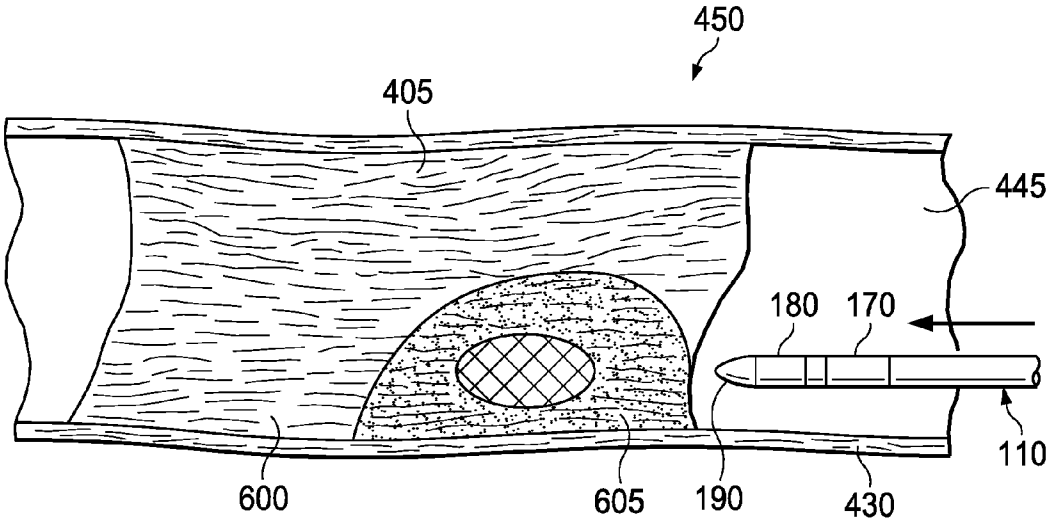
450
405
445
180
170
110
600
605
190
430

Fig. 6

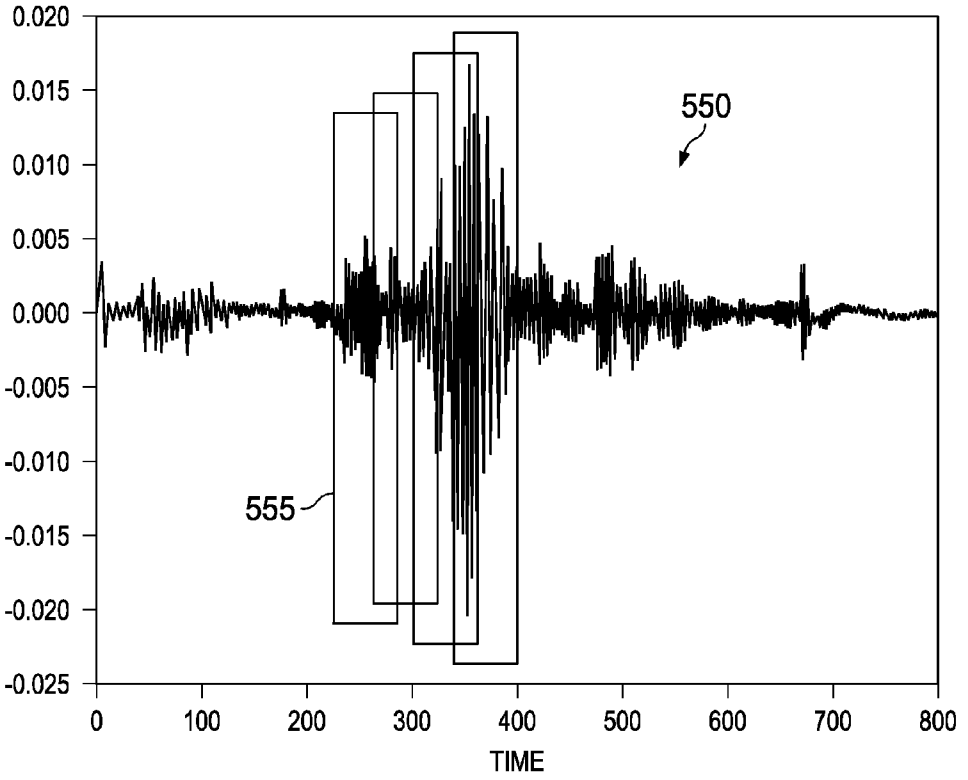
0.020
0.015
0.010
0.005
0.000
-0.005
-0.010
-0.015
-0.020
-0.025
550
555
0
100
200
300
400
500
600
700
800
TIME

Fig. 7

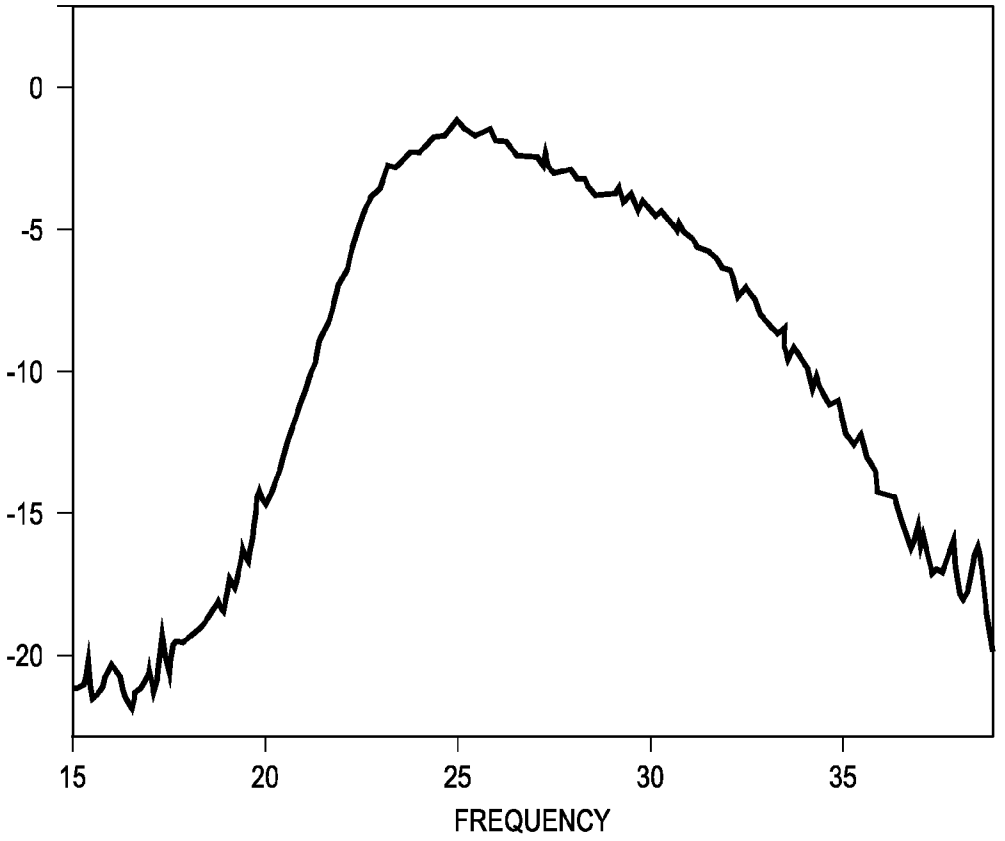

Fig. 8

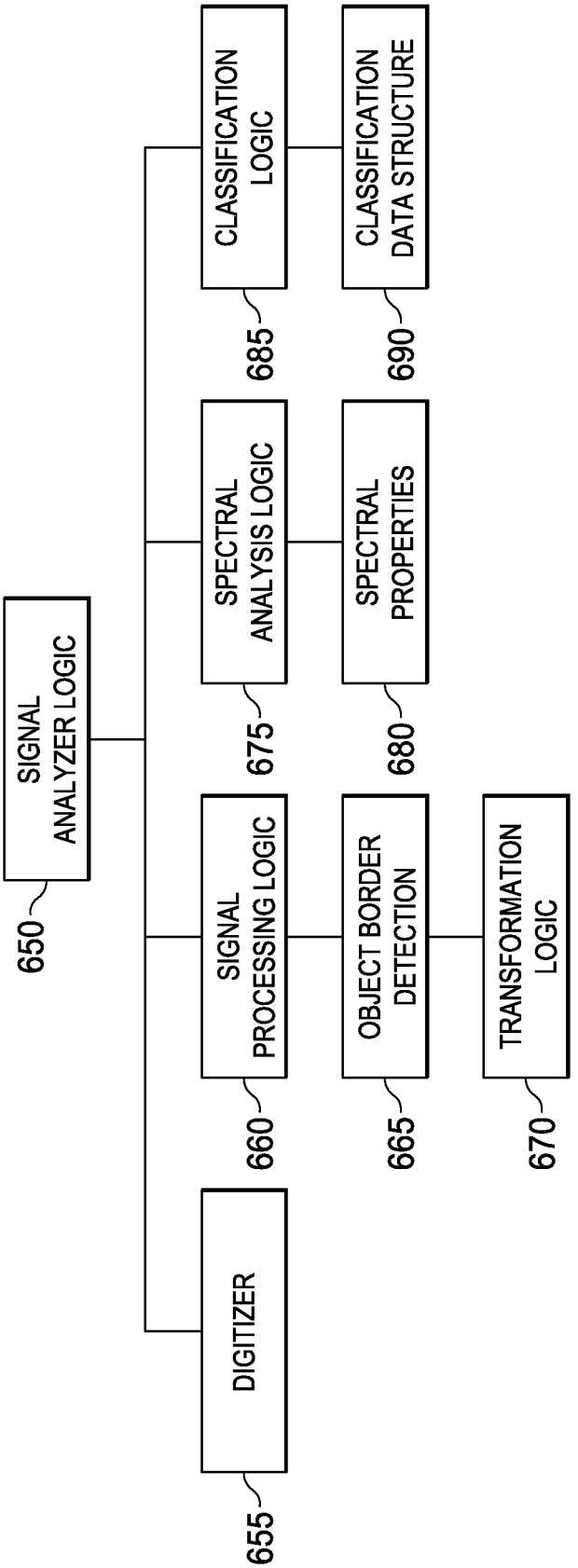
SIGNAL ANALYZER LOGIC
650
DIGITIZER
655
SIGNAL PROCESSING LOGIC
660
SPECTRAL ANALYSIS LOGIC
675
CLASSIFICATION LOGIC
685
OBJECT BORDER DETECTION
665
SPECTRAL PROPERTIES
680
CLASSIFICATION DATA STRUCTURE
690
TRANSFORMATION LOGIC
670

Fig. 9

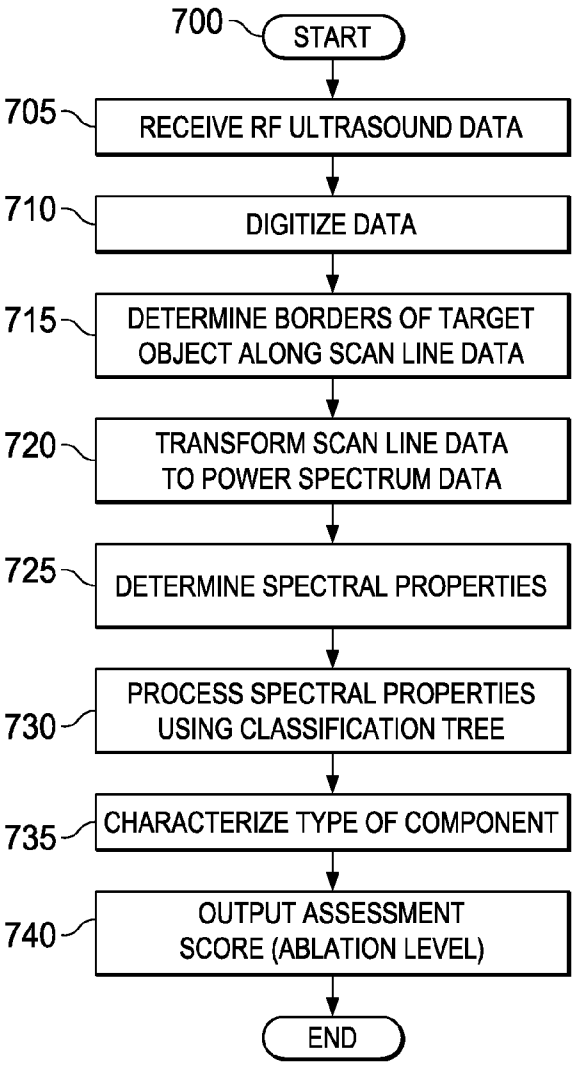
700
START
705
RECEIVE RF ULTRASOUND DATA
710
DIGITIZE DATA
715
DETERMINE BORDERS OF TARGET OBJECT ALONG SCAN LINE DATA
720
TRANSFORM SCAN LINE DATA TO POWER SPECTRUM DATA
725
DETERMINE SPECTRAL PROPERTIES
730
PROCESS SPECTRAL PROPERTIES USING CLASSIFICATION TREE
735
CHARACTERIZE TYPE OF COMPONENT
740
OUTPUT ASSESSMENT SCORE (ABLATION LEVEL)
END

Fig. 10

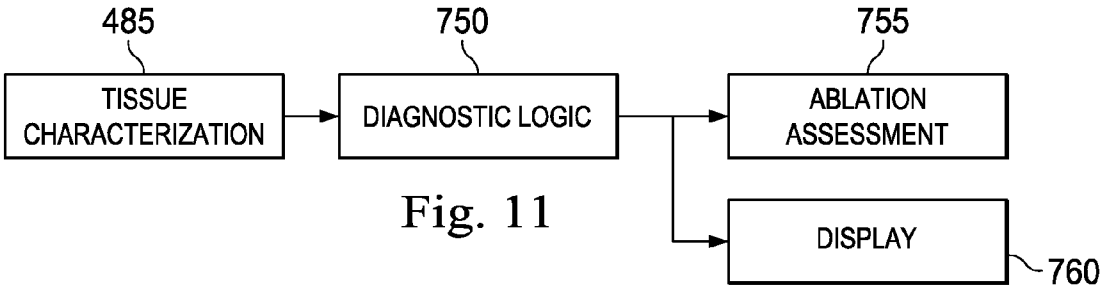
485
TISSUE CHARACTERIZATION
750
DIAGNOSTIC LOGIC
755
ABLATION ASSESSMENT
DISPLAY
760

Fig. 11

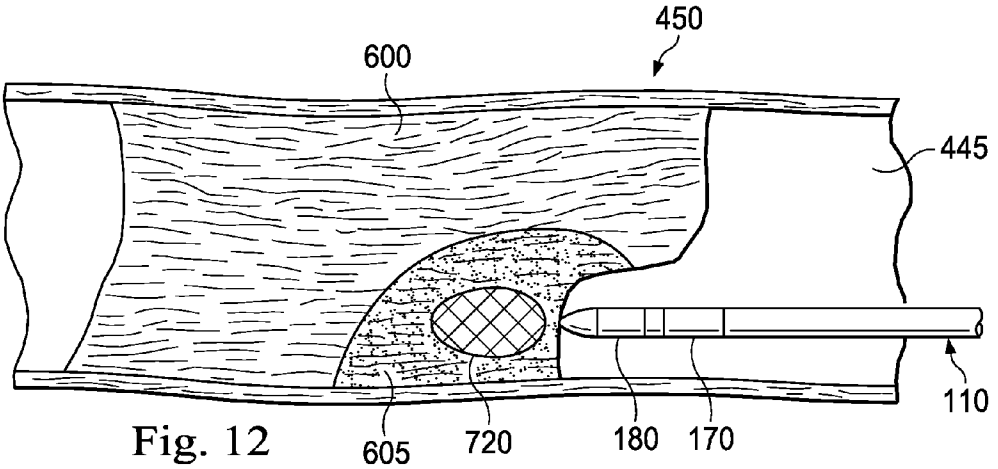

Fig. 12

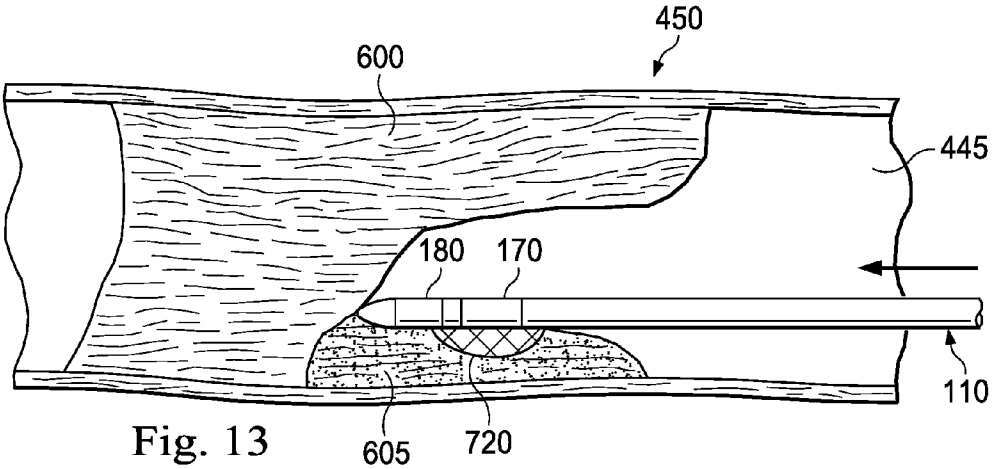

Fig. 13

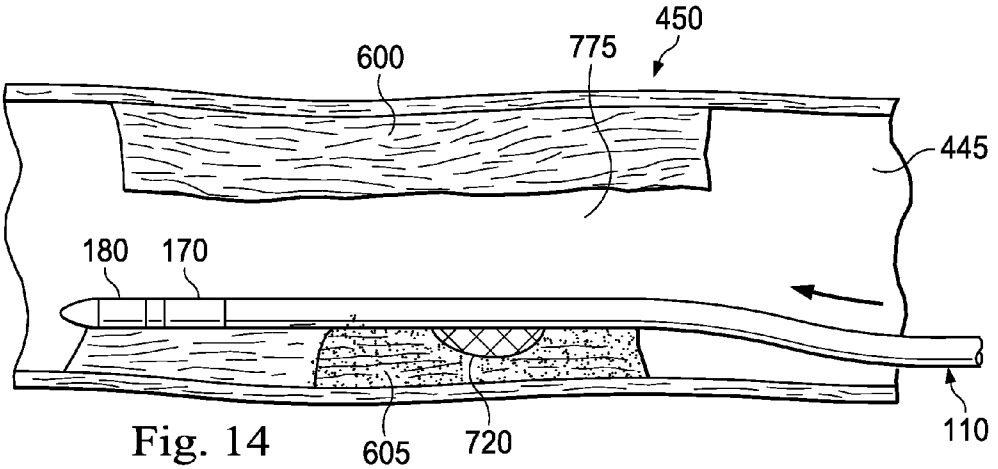

Fig. 14

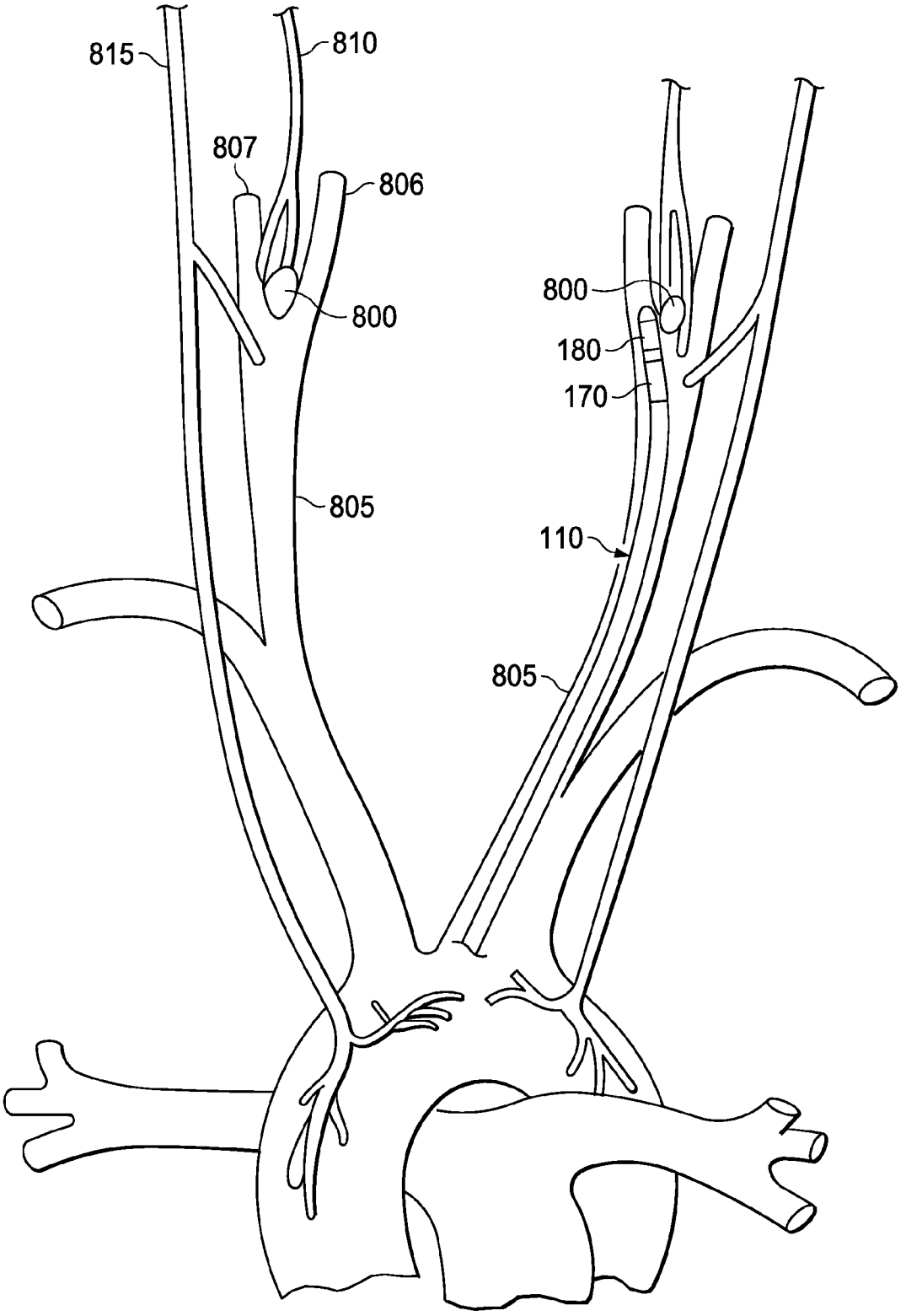

Fig. 15

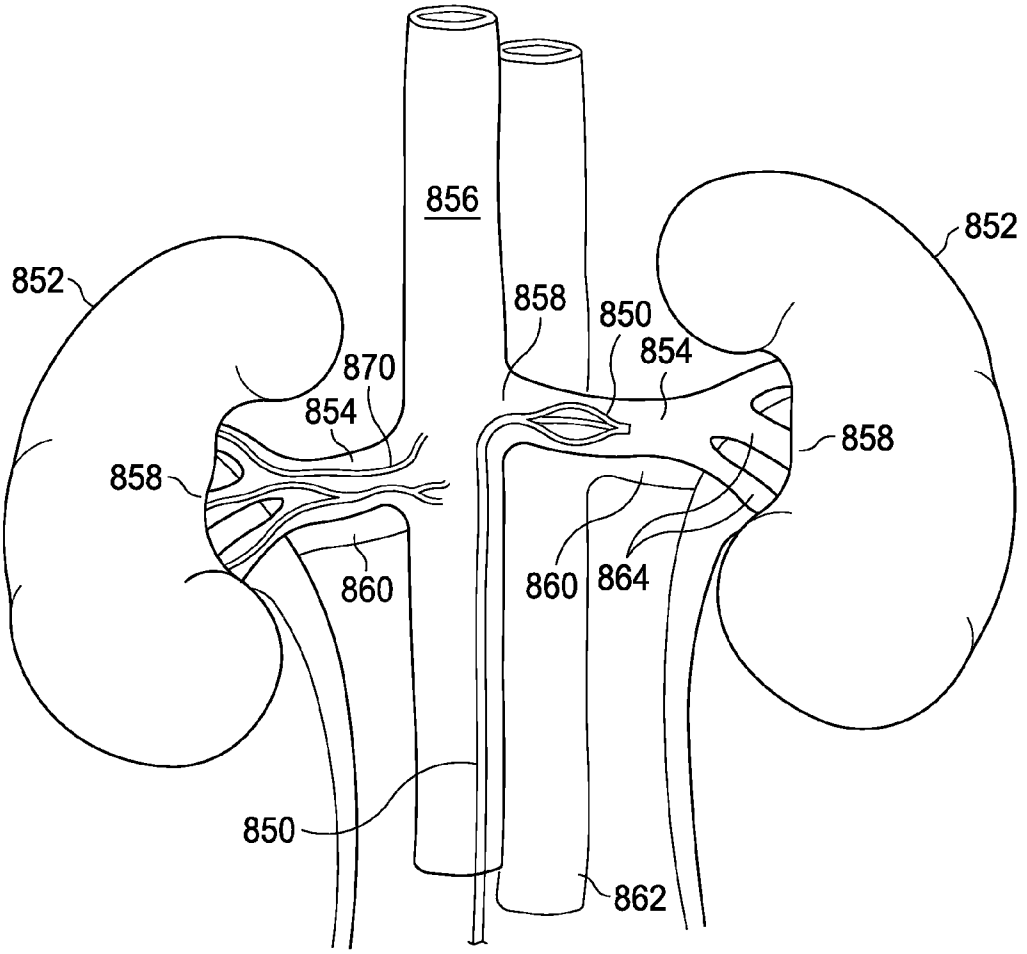

Fig. 16

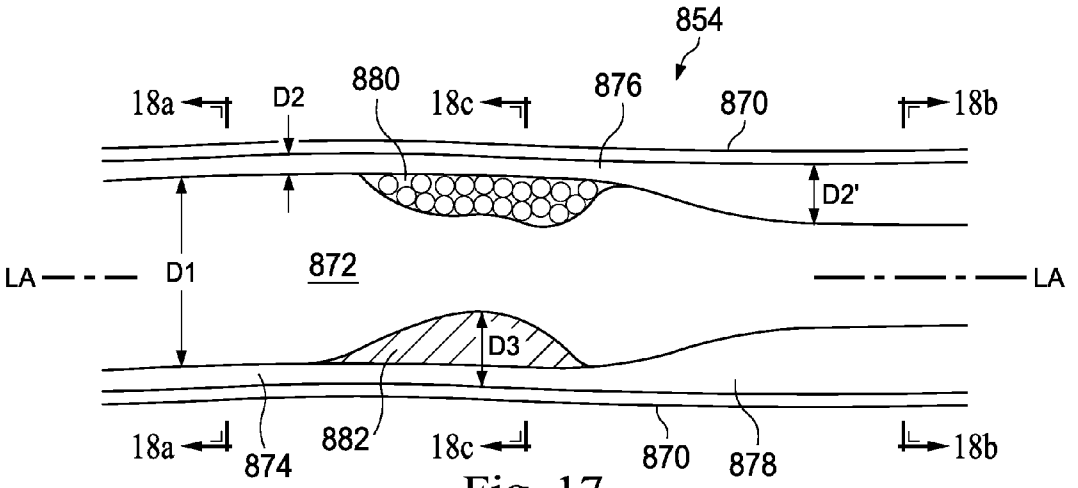

Fig. 17

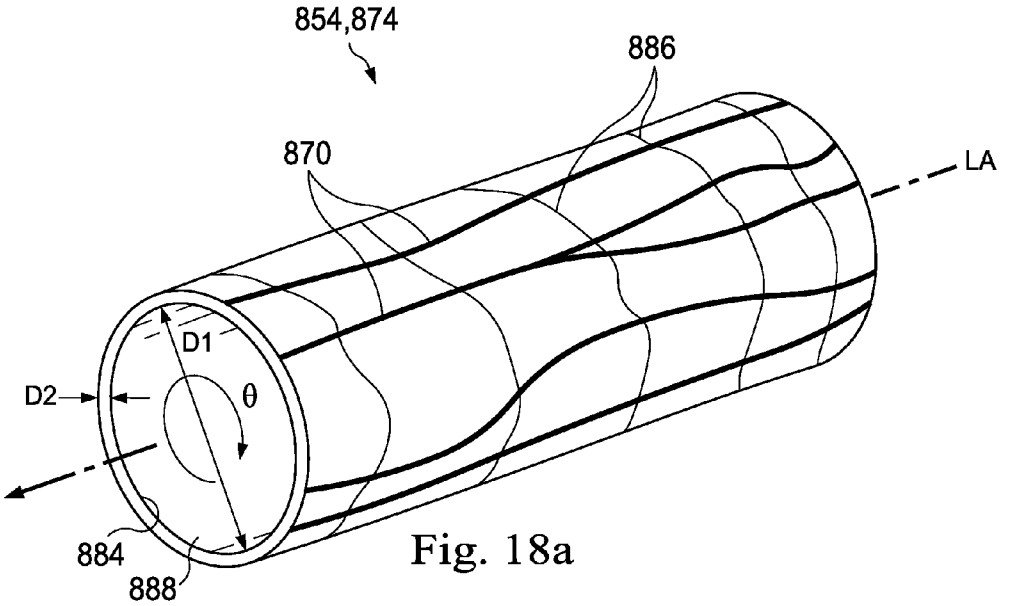

Fig. 18a

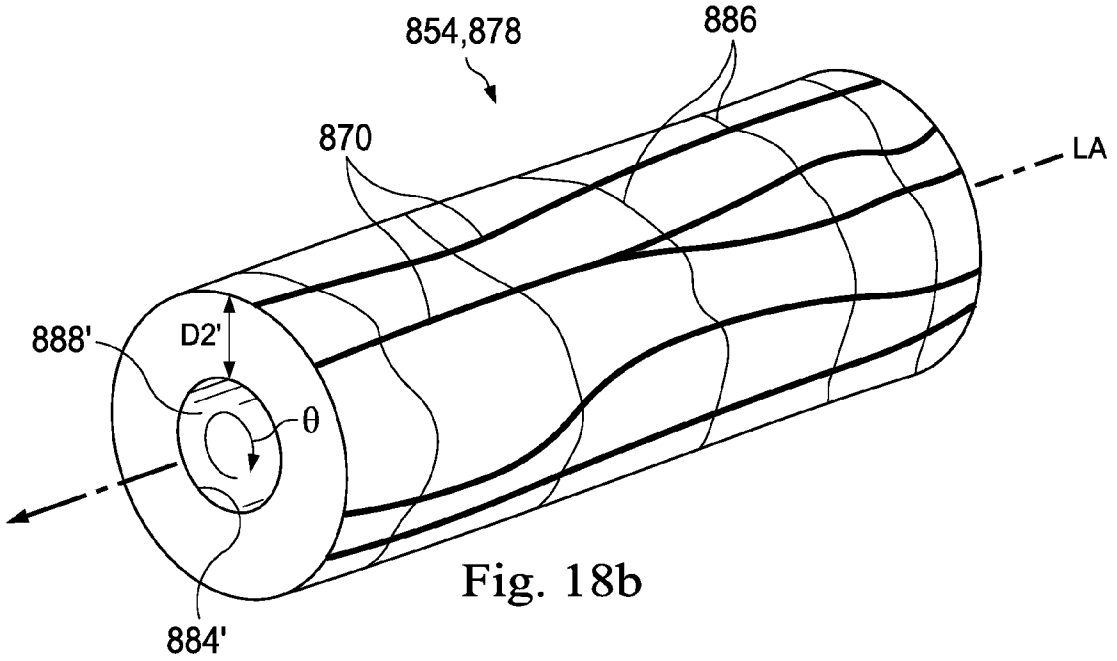

Fig. 18b

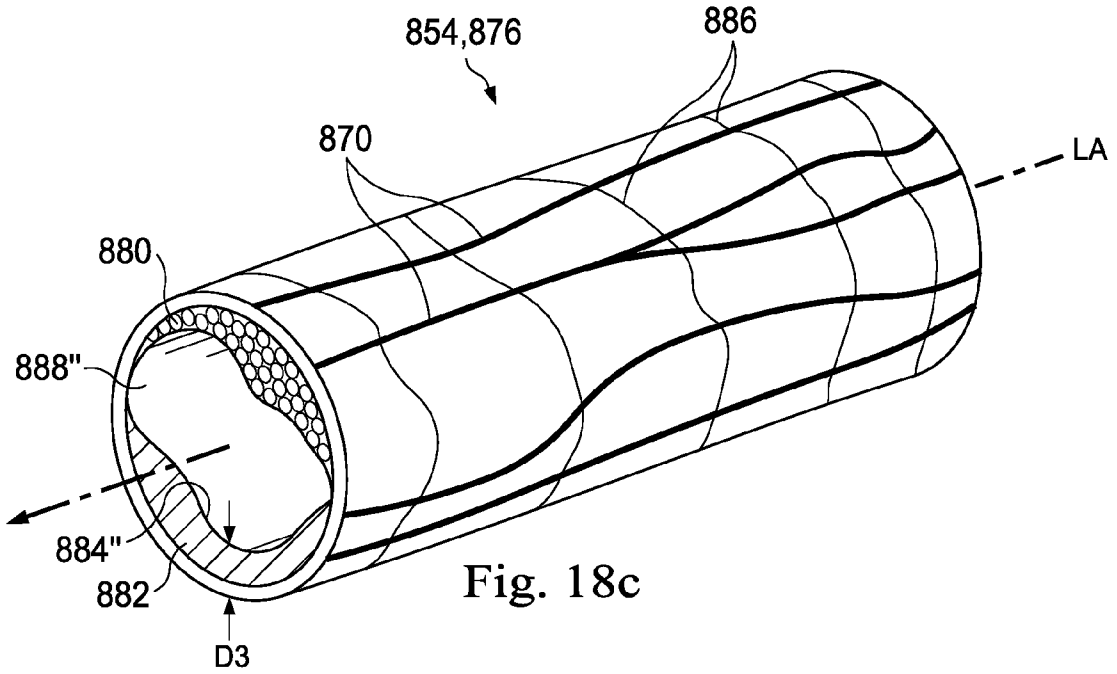

Fig. 18c

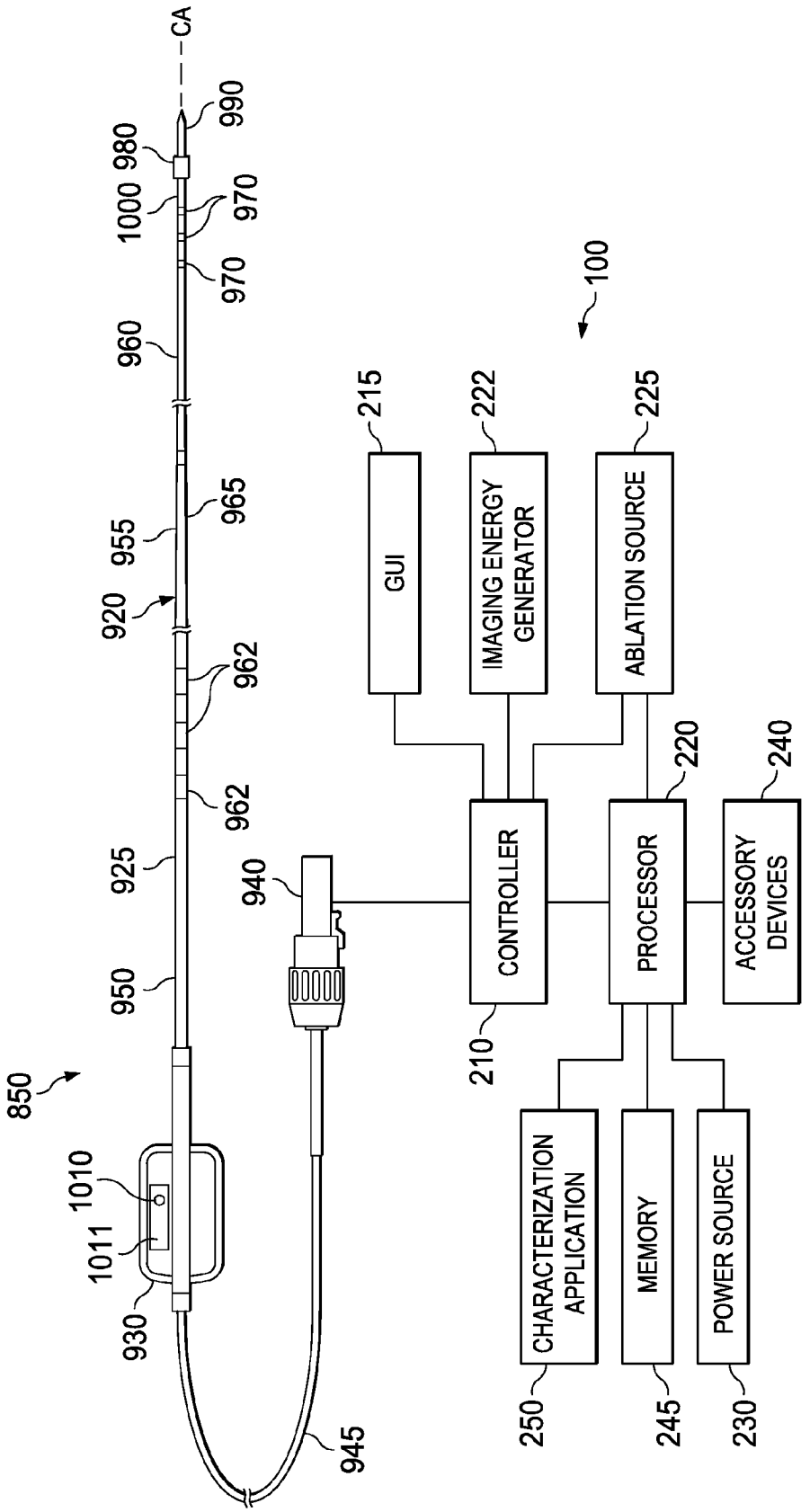
CA
990
980
1000
970
970
960
965
955
920
962
962
925
950
850
1010
1011
930
940
945
100
215
GUI
222
IMAGING ENERGY GENERATOR
225
ABLATION SOURCE
210
CONTROLLER
220
PROCESSOR
240
ACCESSORY DEVICES
250
CHARACTERIZATION APPLICATION
245
MEMORY
230
POWER SOURCE

Fig. 19

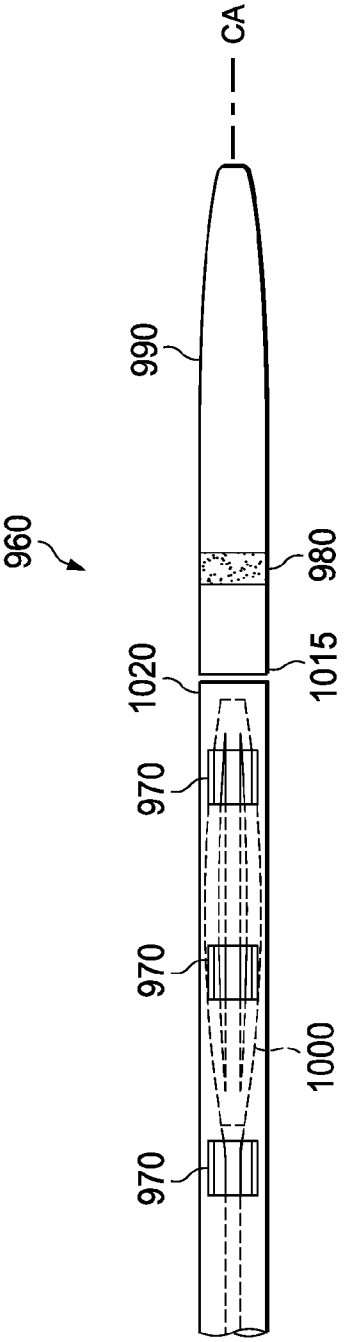

Fig. 20a

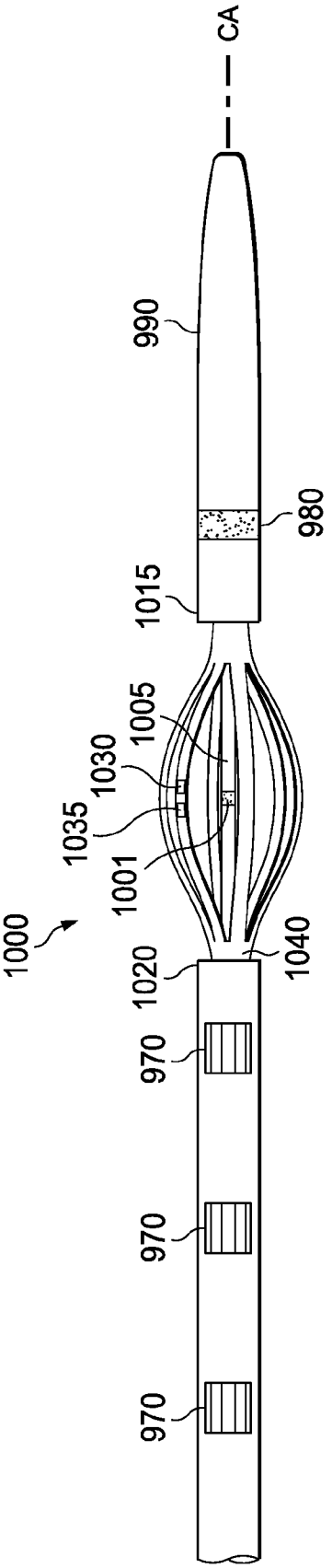

Fig. 20b

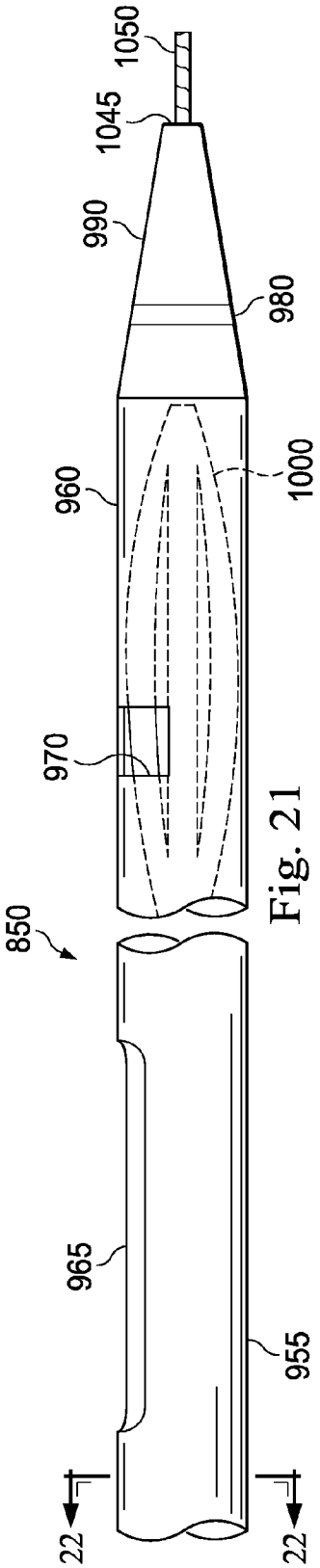

Fig. 21

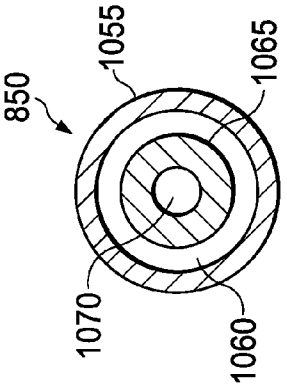

Fig. 22

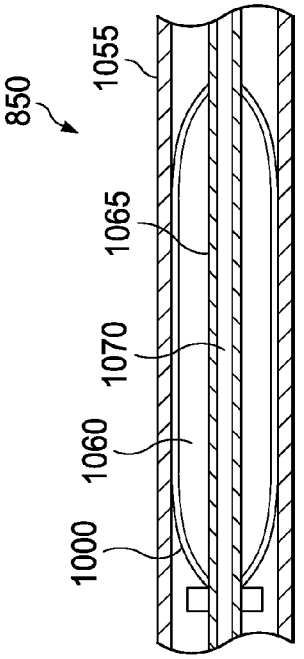

Fig. 23

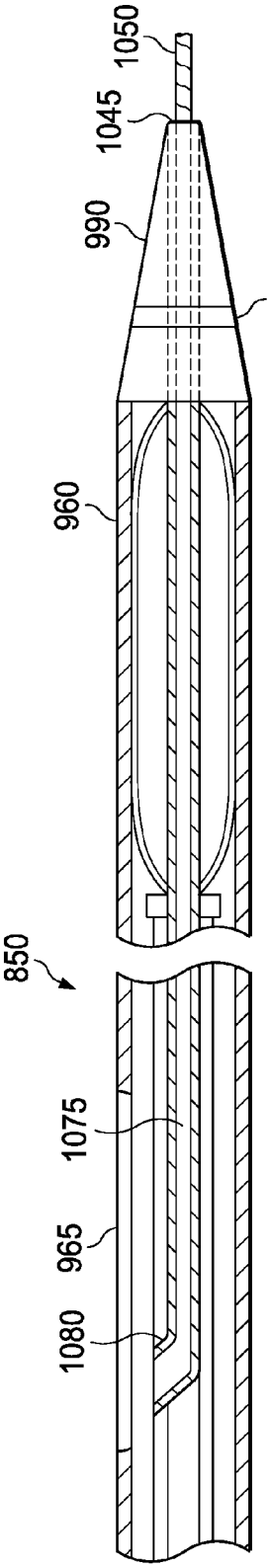
1050
1045
990
980
960
850
1075
965
1080

Fig. 24

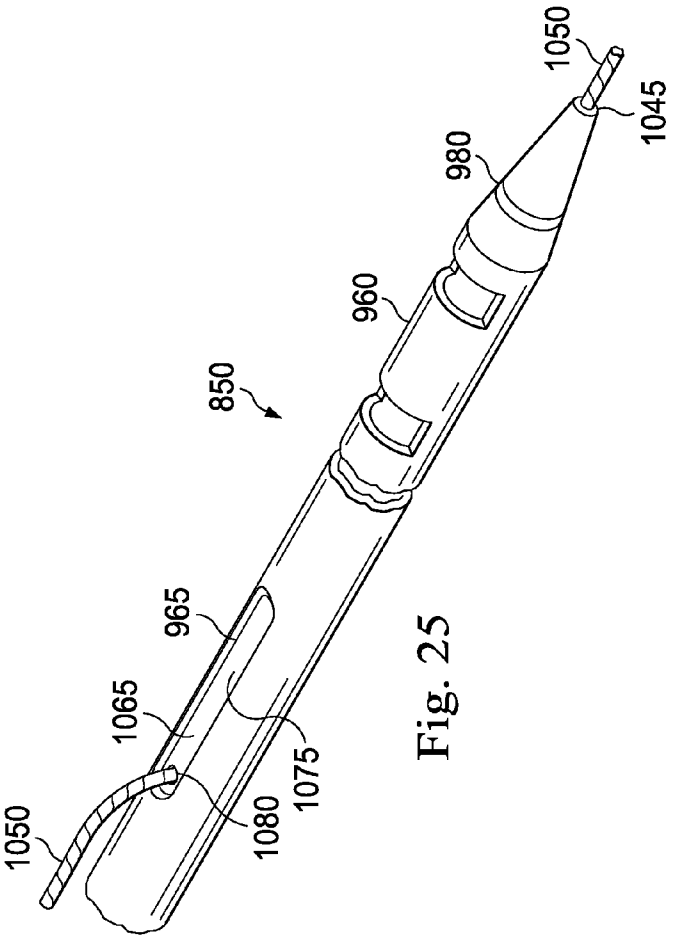
1050
1045
980
960
850
965
1065
1075
1080
1050

Fig. 25

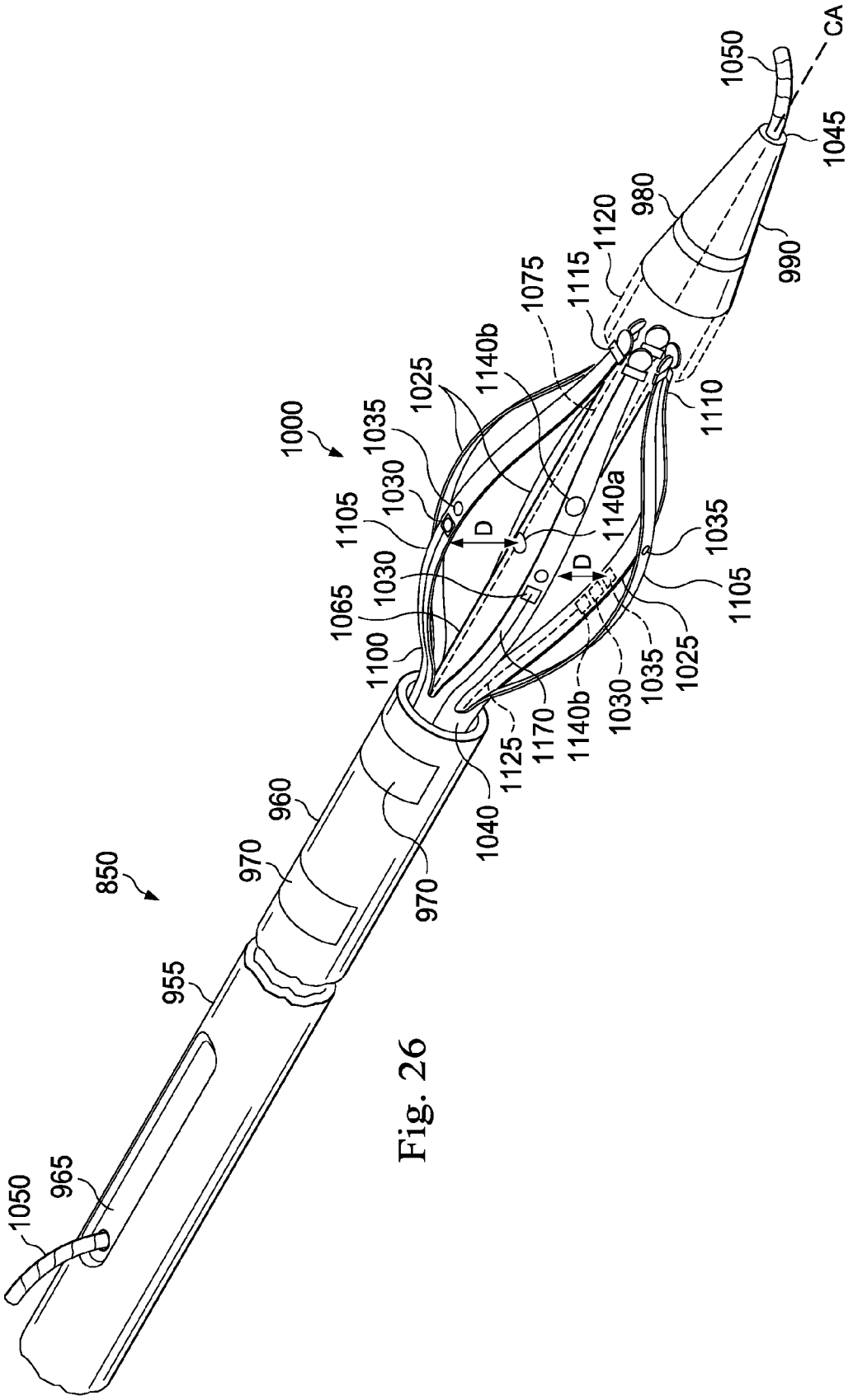
1050
CA
1045
980
990
1120
1115
1075
1140b
1025
1035
1030
1105
1110
1140a
D
1065
1100
1170
1125
1040
960
970
850
955
965

Fig. 26

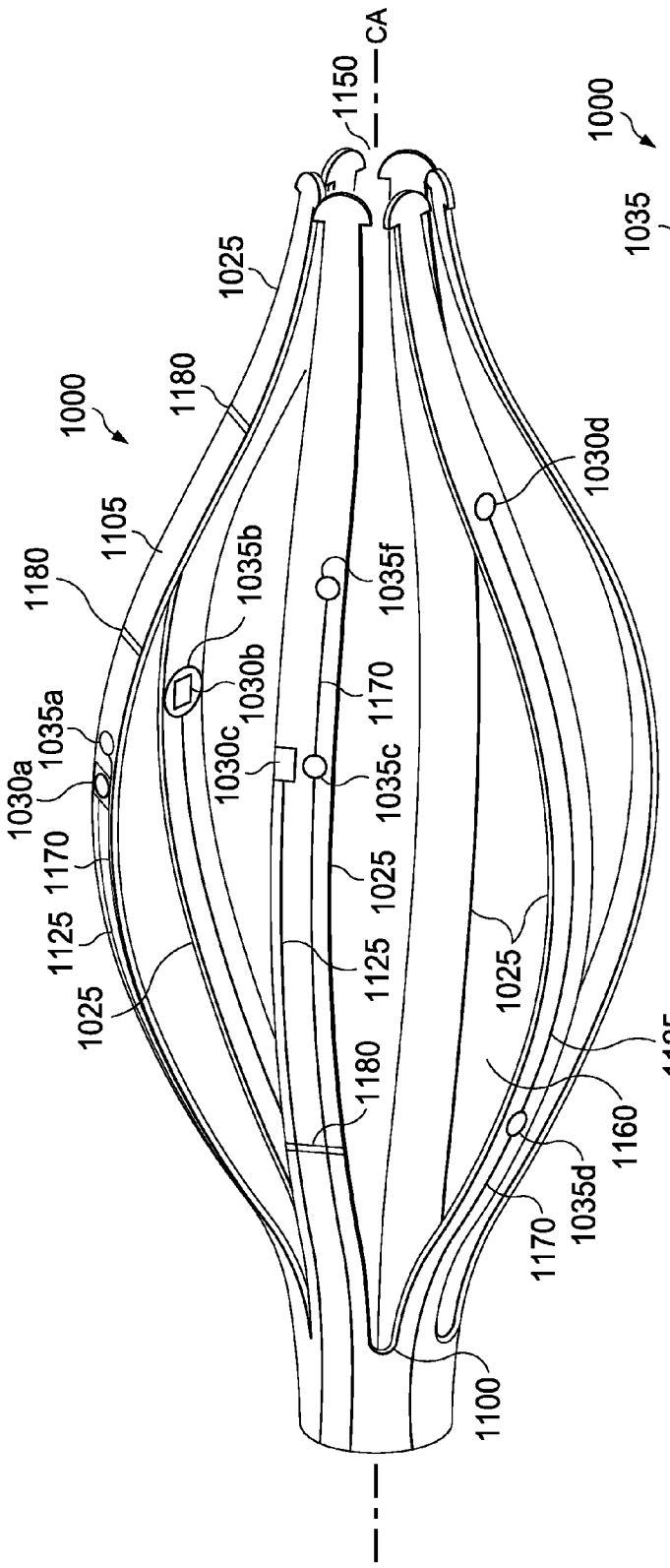
1000
1150
CA
1025
1180
1105
1180
1035b
1030b
1035a
1030a
1170
1125
1025
1030c
1035c
1170
1035f
1025
1125
1180
1030d
1025
1125
1160
1035d
1170
1100

Fig. 27

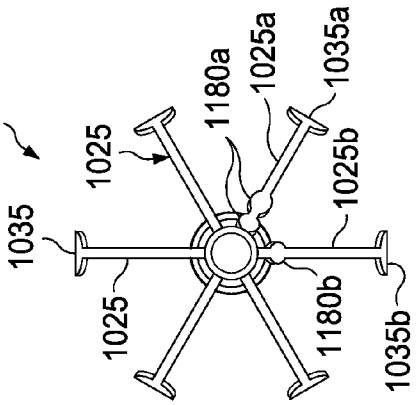
1000
1025
1035
1025
1180a
1025a
1035a
1025b
1180b
1035b

Fig. 28

Fig. 29a

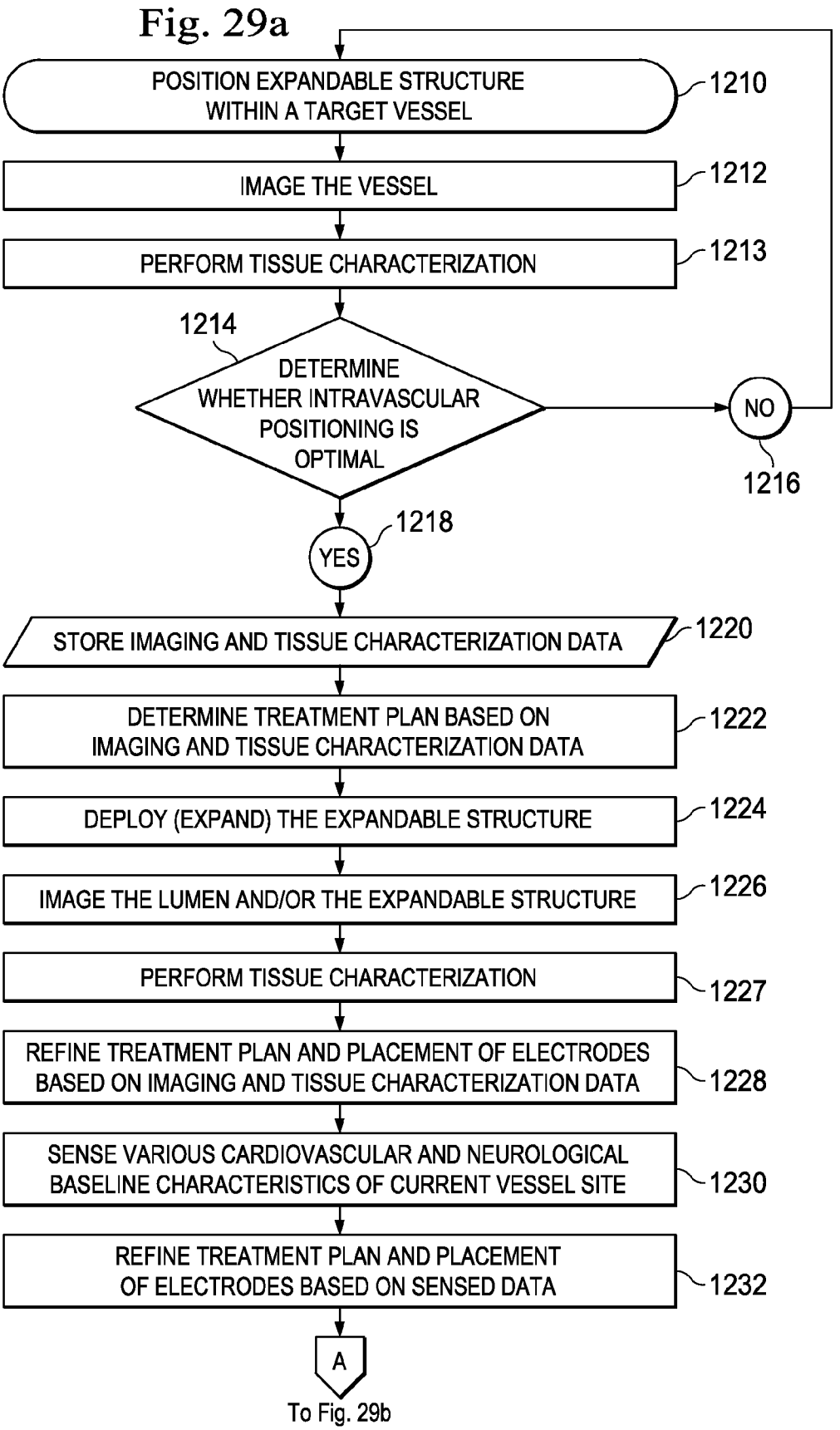
POSITION EXPANDABLE STRUCTURE WITHIN A TARGET VESSEL
1210
IMAGE THE VESSEL
1212
PERFORM TISSUE CHARACTERIZATION
1213
1214
DETERMINE WHETHER INTRAVASCULAR POSITIONING IS OPTIMAL
NO
1216
1218
YES
STORE IMAGING AND TISSUE CHARACTERIZATION DATA
1220
DETERMINE TREATMENT PLAN BASED ON IMAGING AND TISSUE CHARACTERIZATION DATA
1222
DEPLOY (EXPAND) THE EXPANDABLE STRUCTURE
1224
IMAGE THE LUMEN AND/OR THE EXPANDABLE STRUCTURE
1226
PERFORM TISSUE CHARACTERIZATION
1227
REFINE TREATMENT PLAN AND PLACEMENT OF ELECTRODES BASED ON IMAGING AND TISSUE CHARACTERIZATION DATA
1228
SENSE VARIOUS CARDIOVASCULAR AND NEUROLOGICAL BASELINE CHARACTERISTICS OF CURRENT VESSEL SITE
1230
REFINE TREATMENT PLAN AND PLACEMENT OF ELECTRODES BASED ON SENSED DATA
1232
A
To Fig. 29b

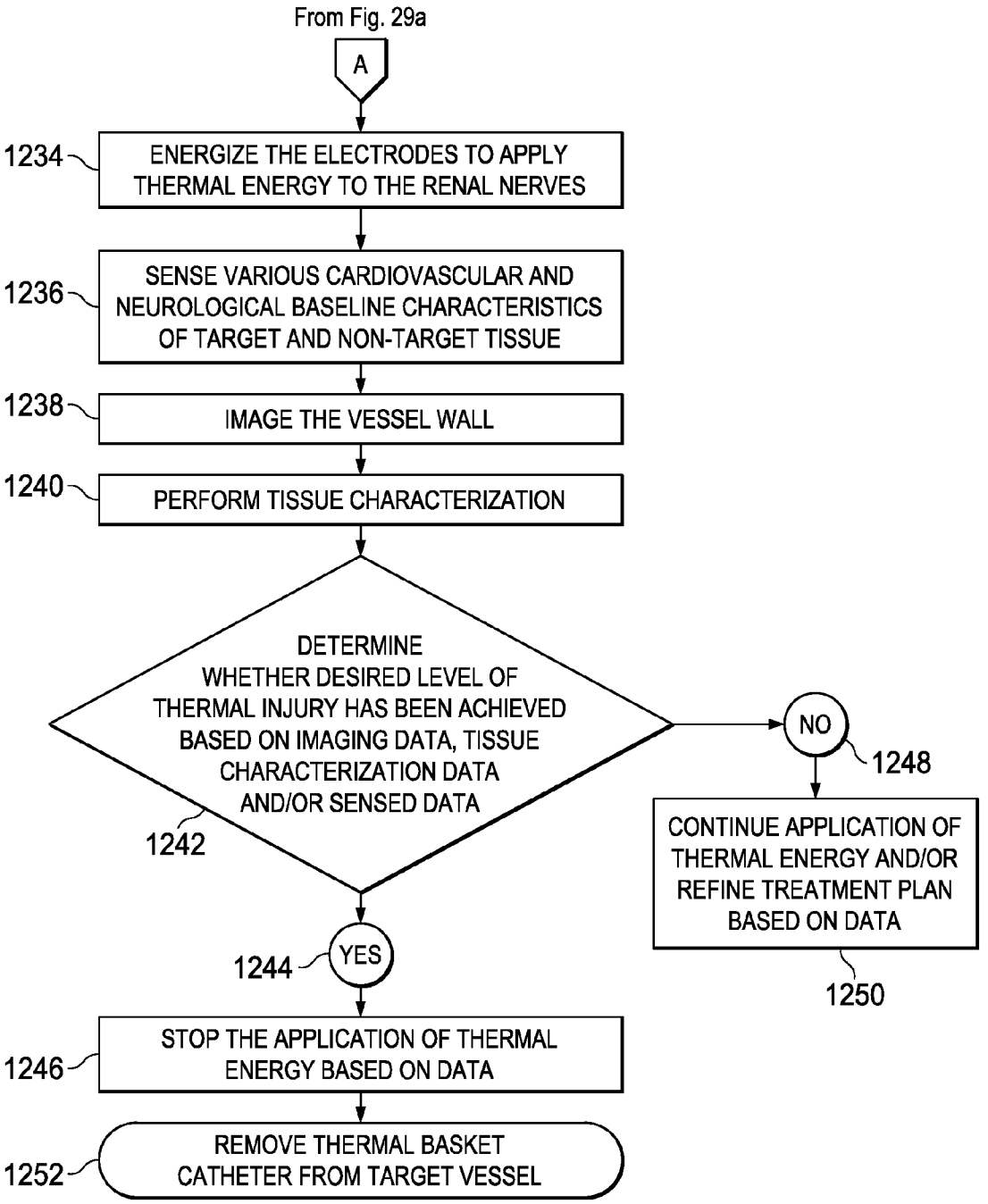
From Fig. 29a
A
1234
ENERGIZE THE ELECTRODES TO APPLY THERMAL ENERGY TO THE RENAL NERVES
1236
SENSE VARIOUS CARDIOVASCULAR AND NEUROLOGICAL BASELINE CHARACTERISTICS OF TARGET AND NON-TARGET TISSUE
1238
IMAGE THE VESSEL WALL
1240
PERFORM TISSUE CHARACTERIZATION
DETERMINE WHETHER DESIRED LEVEL OF THERMAL INJURY HAS BEEN ACHIEVED BASED ON IMAGING DATA, TISSUE CHARACTERIZATION DATA AND/OR SENSED DATA
1242
NO
1248
CONTINUE APPLICATION OF THERMAL ENERGY AND/OR REFINE TREATMENT PLAN BASED ON DATA
1250
1244
YES
1246
STOP THE APPLICATION OF THERMAL ENERGY BASED ON DATA
1252
REMOVE THERMAL BASKET CATHETER FROM TARGET VESSEL

Fig. 29b

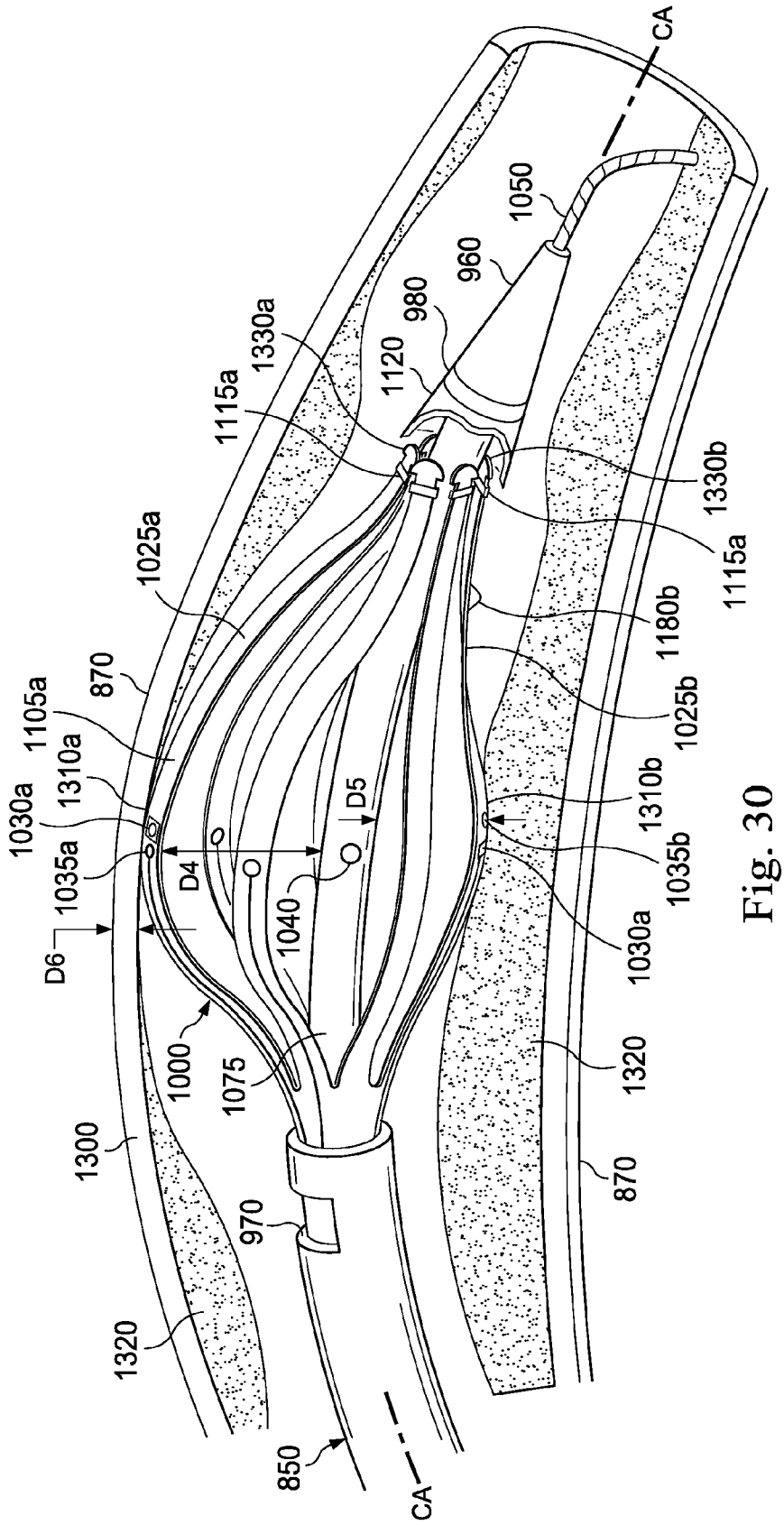
CA
1050
960
980
1120
1330a
1115a
1330b
1115a
1025a
1180b
870
1025b
1105a
1310a
1310b
1030a
D5
1035b
1035a
D4
1040
1030a
D6
1000
1075
1320
1300
870
970
1320
850
CA

Fig. 30

DEVICE, SYSTEM, AND METHOD FOR IMAGING AND TISSUE CHARACTERIZATION OF ABLATED TISSUE

CROSS-REFERENCE TO RELATED APPLICATIONS

[0001] The present application claims priority to and the benefit of U.S. Provisional Patent Application No. 61/745,476, filed Dec. 21, 2012, which is hereby incorporated by reference in its entirety.

FIELD OF THE INVENTION

[0002] The present disclosure relates generally to tissue ablation procedures and imaging with tissue characterization to guide the ablation therapy.

BACKGROUND

[0003] Ablation therapy is utilized throughout the body to disrupt unwanted tissues of a patient. In one example, ablation catheters can be used to create tissue necrosis to treat a variety of health conditions, including cardiovascular conditions such as cardiac arrhythmias. A common cause of cardiac arrhythmias is the abnormal routing of electricity through the cardiac tissue. Thus, arrhythmias can be treated by ablating suspected areas of electrical misfiring, thereby inactivating such aberrant firing. An ablation catheter can apply ablative energy (e.g., without limitation, radiofrequency (RF) energy, cryoablation, lasers, chemicals, high-intensity focused ultrasound (HIFU)) to target tissues to purposefully create lesions in an effort to disrupt undesirable electrical and/or neural pathways to limit or prevent the aberrant signals that lead to the underlying conditions. In some instances, the ablation catheter ablates sufficient target and surrounding tissue to create non-conductive barriers to the progression of aberrant electrical activity through the cardiac tissue. In particular, ablation therapy using RF waves on cardiac tissue is used to cure a variety of cardiac arrhythmias such as, without limitation, supraventricular tachycardia, Wolff-Parkinson-White syndrome (WPW), ventricular tachycardia, atrial fibrillation, atrial flutter, and ectopic atrial tachycardia.

[0004] The ablative energy must be directed such that the target tissue is ablated without unduly injuring the surrounding tissue. In some instances, the ablation procedure can cause undesirable charring of adjacent tissue and localized coagulation. A difficulty associated with ablation procedures stems from a healthcare provider's lack of real-time knowledge over the size, shape, and depth of the treated region. Such uncertainty can make it difficult for the healthcare provider to monitor the degree to which the tissue has been ablated, which makes it difficult to determine when to stop, reduce, or redirect the application of ablative energy.

[0005] Currently, lesions are evaluated following the ablation procedure. In some instances following a cardiac ablation procedure, a physician will evaluate the lesions through electrophysiologic mapping by positioning a catheter in the heart to measure the remaining electrical activity and determine whether the lesions have created a nonconductive pathway that is adequately halting aberrant conductivity. Conventional mapping techniques used during ablation procedures require the clinician to manually mark treated regions on an anatomical map. If it is established that the lesions were inadequately formed, then additional lesions may be created to complete the nonconductive pathway and address the aberrant conductivity. However, this post-ablation evaluation entails further medical procedures and extends the time required to treat the patient's underlying condition. Moreover, the anatomical marking may be affected by numerous variables, including movement of the target tissue and/or the catheter due to cardiac contractions and ventilation. Thus, there may not be strong correlation between the lesions marked on the anatomical map and the effective delivery of ablative therapy.

[0006] One method of evaluating lesions as they are formed is to measure the electrical impedance and/or the temperature of the target tissue and surrounding tissues. Biochemical differences between ablated and normal tissues can result in changes in electrical impedance between the tissue types. In general, impedance measurements are roughly correlated with impedance measurements. Though impedance is routinely monitored during electrophysiologic therapy, however, it is not directly related to lesion formation. Measuring impedance provides data as to the location of the ablated tissue, but it does not provide any qualitative, real-time data about the character of the ablated tissue to enable evaluation of the effectiveness of the lesion or the degree of ablation.

[0007] Another approach is lesion pacing, where the healthcare provider can measure the electrical conductance between two points of tissue bridging the lesion. However, lesion pacing only measures the effectiveness of the lesion in creating a nonconductive area. It does not provide any qualitative data about the character of the ablated tissue or the degree of ablation.

[0008] The devices, systems, and methods disclosed herein overcome one or more of the deficiencies of the prior art.

SUMMARY

[0009] In one aspect, the present disclosure provides a system and method for performing an ablation procedure on a patient's tissue while utilizing active tissue characterization to at least in part guide the ablation therapy. Among other features, the tissue characterization information can assist the user in one or more of the following: evaluation of tissue to be ablated, the amount of energy to utilize, the extent of the area to be ablated, damage to adjacent tissue, the direction of the tissue to be ablated, and the depth of ablation.

[0010] In one embodiment, the present disclosure provides a system for ablating and characterizing tissue within the ablation zone. The system can include an ablation element configured to emit ablative energy toward a tissue of interest and an imaging apparatus configured to emit energy and collect imaging data including reflected signals from the tissue of interest. The system also includes a characterization application having a signal analyzer for analyzing the imaging data and determining one or more signal properties from the reflected signals; and a correlation processor configured to associate the one or more signal properties to pre-determined tissue signal properties of different tissue components through a pattern recognition technique. In one aspect, the pre-determined tissue signal properties are embodied in a database, and the correlation processor is further configured to identify a tissue component and an ablation level of the tissue of interest based on the pattern recognition technique. In another aspect, the ablation element is expandable.

[0011] In another embodiment, the present disclosure provides a method of ablating and characterizing one or more tissue components of a scanned tissue zone in a patient. The method comprises positioning a device including an ablative

element and an imaging apparatus adjacent a region of interest of the scanned tissue zone. The method continues by directing ablative energy from an ablative element toward the region of interest, receiving reflected signals from an imaging apparatus scanning the region of interest, determining one or more signal properties of the region of interest from the reflected signals, and associating the one or more signal properties to pre-determined signal properties of tissue components of an tissue similar to the scanned tissue zone wherein the pre-determined signal properties comprise classification conditions stored in a data structure. The method includes identifying one or more tissue components and their corresponding levels of ablation based on the associating. In one aspect, the positioning can include inserting a catheter device into a patient through a natural orifice or through an opening formed in the skin.

[0012] It is to be understood that both the foregoing general description and the following detailed description are exemplary and explanatory in nature and are intended to provide an understanding of the present disclosure without limiting the scope of the present disclosure. In that regard, additional aspects, features, and advantages of the present disclosure will be apparent to one skilled in the art from the following detailed description.

BRIEF DESCRIPTION OF THE DRAWINGS

[0013] The accompanying drawings illustrate embodiments of the devices and methods disclosed herein and together with the description, serve to explain the principles of the present disclosure. Throughout this description, like elements, in whatever embodiment described, refer to common elements wherever referred to and referenced by the same reference number. The characteristics, attributes, functions, interrelations ascribed to a particular element in one location apply to those elements when referred to by the same reference number in another location unless specifically stated otherwise.

[0014] The figures referenced below are drawn for ease of explanation of the basic teachings of the present disclosure only; the extensions of the figures with respect to number, position, relationship and dimensions of the parts to form the preferred embodiment will be explained or will be within the skill of the art after the following description has been read and understood. Further, the exact dimensions and dimensional proportions to conform to specific force, weight, strength and similar requirements will likewise be within the skill of the art after the following description has been read and understood.

[0015] The following is a brief description of each figure used to describe the present invention, and thus, is being presented for illustrative purposes only and should not be limitative of the scope of the present invention.

[0016] FIG. **1** is a schematic illustration of an ablation system including an ablation catheter in accordance with one embodiment of the present disclosure.

[0017] FIG. **2** illustrates an exemplary method of characterizing a specimen to populate a characterization database in accordance with one embodiment of the present disclosure.

[0018] FIG. **3** is a simplified block diagram of the individual components of an exemplary ablation system according to one embodiment of the present disclosure.

[0019] FIG. **4** is a diagrammatic, cross-sectional illustration of an unobstructed artery, showing its layers.

[0020] FIG. **5** is a transverse sectional illustration of the artery shown in FIG. **4** along the lines **5-5**.

[0021] FIG. **6** is an illustration of the ablation catheter shown in FIG. **1** positioned adjacent a total occlusion within an artery according to one embodiment of the present disclosure.

[0022] FIG. **7** is an illustration of an ultrasonic A-scan according to one embodiment of the present disclosure.

[0023] FIG. **8** is an illustration of a power spectrum plot generated from the A-scan signal shown in FIG. **7**.

[0024] FIG. **9** is a simplified block diagram of an exemplary signal analyzer system according to one embodiment of the present disclosure.

[0025] FIG. **10** is a simplified flow diagram illustrating a methodology for characterizing tissue components using the imaging system shown in FIG. **3** according to one embodiment of the present disclosure.

[0026] FIG. **11** is a simplified block diagram of individual components of an exemplary diagnostic system according to one embodiment of the present disclosure.

[0027] FIGS. **12-14** are illustrations of the ablation catheter shown in FIG. **1** advancing through a total occlusion within an artery according to one embodiment of the present disclosure.

[0028] FIG. **15** is a schematic diagram illustrating an exemplary ablation catheter positioned adjacent a carotid body according to one embodiment of the present disclosure.

[0029] FIG. **16** is a schematic diagram illustrating an exemplary thermal basket catheter in an expanded condition positioned in the left renal artery according to one embodiment of the present disclosure.

[0030] FIG. **17** is a schematic diagram illustrating a cross-sectional view of a segment of a renal artery.

[0031] FIG. **18***a* is a schematic diagram illustrating a perspective view of a portion of the renal nerve plexus overlying a segment of a renal artery.

[0032] FIG. **18***b* is a schematic diagram illustrating a perspective view of a portion of the renal nerve plexus overlying a segment of an atherosclerotic renal artery.

[0033] FIG. **18***c* is a schematic diagram illustrating a perspective view of a portion of the renal nerve plexus overlying a segment of a renal artery.

[0034] FIG. **19** is a schematic illustration of a thermal neuromodulation system including an exemplary thermal basket catheter according to one embodiment of the present disclosure.

[0035] FIG. **20***a* is an illustration of a side view of a portion of the thermal basket catheter in an unexpanded condition according to one embodiment of the present disclosure.

[0036] FIG. **20***b* is an illustration of a side view of a portion of the thermal basket catheter in an expanded condition according to one embodiment of the present disclosure.

[0037] FIG. **21** is an illustration of a partially cross-sectional side view of a portion of the thermal basket catheter in an unexpanded condition according to one embodiment of the present disclosure.

[0038] FIG. **22** is an illustration of a transverse cross-sectional view of the body of the thermal basket catheter as taken along the lines **22-22** of FIG. **21** according to one embodiment of the present disclosure.

[0039] FIG. **23** is an illustration of a cross-sectional side view of the expandable structure in a non-deployed and unexpanded condition according to one embodiment of the present disclosure.

[0040] FIG. **24** is an illustration of a cross-sectional view of a portion of the thermal basket catheter in an unexpanded condition according to one embodiment of the present disclosure.

[0041] FIG. **25** is an illustration of a perspective view of a portion of the thermal basket catheter in an unexpanded condition according to one embodiment of the present disclosure.

[0042] FIG. **26** is an illustration of a perspective view of a portion of the thermal basket catheter in an expanded condition according to one embodiment of the present disclosure.

[0043] FIG. **27** is an illustration of a perspective view of the expandable structure in an expanded condition according to one embodiment of the present disclosure.

[0044] FIG. **28** is an illustration of a plan view of the expandable structure in an expanded condition according to one embodiment of the present disclosure.

[0045] FIGS. **29***a* and **29***b* provide a schematic flowchart illustrating methods of delivering, controlling, and monitoring the thermal neuromodulation to renal vessels.

[0046] FIG. **30** is an illustration of a partially cross-sectional perspective view of a portion of the thermal basket catheter positioned within a vessel according to one embodiment of the present disclosure.

DETAILED DESCRIPTION

[0047] For the purposes of promoting an understanding of the principles of the present disclosure, reference will now be made to the embodiments illustrated in the drawings, and specific language will be used to describe the same. It will nevertheless be understood that no limitation of the scope of the disclosure is intended. Any alterations and further modifications to the described devices, instruments, methods, and any further application of the principles of the present disclosure are fully contemplated as would normally occur to one skilled in the art to which the disclosure relates. In particular, it is fully contemplated that the features, components, and/or steps described with respect to one embodiment may be combined with the features, components, and/or steps described with respect to other embodiments of the present disclosure. For simplicity, in some instances the same reference numbers are used throughout the drawings to refer to the same or like parts.

[0048] The present disclosure relates generally to an apparatus, systems, and methods for tissue ablation and image-guided monitoring of tissue ablation through tissue characterization. More particularly, the present disclosure relates to an ablating tool including an imaging device and in communication with a processor capable of tissue characterization for use in guiding, monitoring, and assessing the ablation procedure in real-time. The present disclosure describes systems and methods for tissue characterization by analyzing images created by an energy emission device, such as, by way of non-limiting example, an ultrasound transducer, deployable with an imaging system to facilitate interpretation of images of a patient's tissues of interest, such as ablated and neighboring tissue. The systems and methods described herein correlate image properties of the tissues of interest with pre-determined tissue properties to automatically and reproducibly characterize the tissues of interest in real time (i.e., as the tissues are being imaged and/or ablated). In some embodiments, the systems and methods described herein utilize various parameters related to the type of tissue being imaged, the type of ablation technique being employed, particular anatomical characteristics of the patient, and/or medical conditions of the patient to better characterize the tissues of interest. By automatically and reproducibly characterizing the imaged tissues in real time, the systems and methods described herein minimize the known observer-variability associated with tissue characterization by observers. Moreover, by specifically characterizing the specific tissue types and the degree of ablation in real-time, the systems and methods described herein allow the healthcare provider to appropriately adjust the degree, location, and type of ablation during the ablation procedure.

[0049] FIG. **1** illustrates an ablation system **100** that is configured to deliver ablative energy to target tissues and monitor the ablated tissues according to one embodiment of the present disclosure. The system **100** includes an ablation catheter **110** comprising an elongate, flexible, tubular body **120** that is configured for intravascular placement and defines an internal lumen **125**. The body **120** extends from a handle **130** along a longitudinal axis CA, which is coupled to an interface **140** by an electrical connection **145**. The body **120** includes a proximal portion **150** and a distal portion **160**. In FIG. **1**, the distal portion **160** includes an ablative element **170** and an imaging apparatus **180** positioned proximal to a distal tip **190**. The ablative element **170** and imaging apparatus **180** are positioned on a proximal segment of the distal tip **190**. In the pictured embodiment, the ablative element **170** is positioned proximal to the imaging apparatus **180**. In other embodiments, the ablative element **170** is positioned distal to the imaging apparatus **180**. Generally, the catheter **110** may be configured to take on any desired profile, which may depend upon the type of ablative element, the type of imaging apparatus (e.g., ultrasound, OCT, multi-modality, etc.), the desired application, or the particular tissue of interest. In some embodiments, aspects of the catheter **110** may be substantially similar to aspects of a catheter disclosed in U.S. Patent Application No. 2011/0251487, titled "Apparatus and Method s for Intravascular Ultrasound Imaging and for Crossing Severe Vascular Occlusions," and published Oct. 13, 2011, which is incorporated by reference herein in its entirety.

[0050] The interface **140** is configured to connect the catheter **110** to a patient interface module or controller **210**, which may include a graphic user interface (GUI) **215**. More specifically, in some instances the interface **140** is configured to communicatively connect at least the imaging apparatus **180** and the ablative element **170** of the catheter **110** to a controller **210** suitable for carrying out ablation and intravascular imaging. The controller **210** is in communication with and performs specific user-directed control functions targeted to a specific device or component of the system **100**, such as the ablation catheter **110**, the imaging apparatus **180**, and/or the ablative element **170**.

[0051] The interface **140** may also be configured to include a plurality of electrical connections, each electrically coupled to the ablative element **170** via a dedicated conductor and/or a cable (not shown), respectively, running through the lumen **125** of the body **120**. Such a configuration allows for a specific group or subset of electrodes on the ablative element **170** to be easily energized with either monopolar or bipolar energy, for example. Such a configuration may also allow the ablative element **170** to transmit data from any of a variety of sensors on the ablative element via the controller **210** to data display modules such as a GUI **215** and/or a processor **220**. The interface **140** is coupled to an ablation source **225** via the controller **210**, with the controller **210** allowing energy to be

selectively directed to the portion of the target tissue that is engaged by the ablative element **170**.

[0052] The ablation catheter **110** includes one ablative element **170** positioned on the distal portion **160** of the body **120**, as described above. However, other embodiments may include any number of ablative elements positioned in any of a variety of arrangements along the body **120**. The ablative element may employ any ablative method known in the art, including, without limitation, radiofrequency (RF) energy, cryoablation, lasers, chemicals, high-intensity focused ultrasound (HIFU). Thus, the ablative element **170** may comprise, without limitation, RF ablation electrodes, microwave ablation antenna, laser ablators, HIFU ablators, and cryogenic ablators. The ablation element **170**, which may be constructed of one or more electrode materials known in the art, has an ablating field (or ablating volume) **221** and is configured to ablate the tissue located within the ablating field **221**. In some embodiments, the ablating field **221** comprises a fixed size and shape. In other embodiments, the size and/or shape of the ablating field **221** is alterable upon instructions from the user and/or the processor **220**. In some embodiments, for example, where the ablative element comprises a high intensity focused ultrasound (HIFU) ablator, the ablating field may be cone-shaped. In other embodiments, where the ablative element comprises a radiofrequency (RF) ablator, the ablating field may be hemispherical. In some embodiments, the ablative element is configured to employ more than one type of ablative energy. In some embodiments, the ablation catheter **110** employs multiple ablative elements capable of using different ablative energies. In some embodiments, the ablation catheter **110** may have multiple ablative elements that operate separately or in concert to form the desired lesions during an ablation procedure.

[0053] In the pictured embodiment, the imaging apparatus **180** comprises an ultrasound imaging transducer. The imaging apparatus **180** can take the form of any one of a number of known ultrasound imaging transducers, such as, for example and without limitation, a phased array, a forward-looking array, a mechanically steered sector array, a rotational transducer, a vector array, a forward-looking oscillator transducer or a linear array. For example, in some embodiments involving cardia ablation applications, the imaging apparatus comprises intracardiac echocardiography (ICE) or forward-looking ICE. The imaging apparatus has an imaging field of view **223** that may or may not overlap with the ablating field **221**. In the pictured embodiment, the imaging field of view **223** is shown overlapping with the ablating field **221**, thereby allowing the user to image the tissue being ablated within the ablating field **221** in real-time.

[0054] It should be appreciated that while the exemplary embodiments herein are described in terms of an ultrasonic imaging apparatus, or more particularly the use of IVUS data (or a transformation thereof) to render images of an object, the present disclosure is not so limited. Thus, for example, an imaging apparatus using backscattered data (or a transformation thereof) based on electromagnetic radiation (e.g., light waves in non-visible ranges such as Optical Coherence Tomography, X-Ray CT, infrared spectroscopy, etc.) to render images of any tissue type or composition (not limited to vasculature, but including other human as well as non-human structures) is within the spirit and scope of the present disclosure. Any form of imaging, measuring, and/or evaluation device (and resultant data) is within the spirit and scope of the present disclosure. Still further, while the system and techniques are described in the context of an invasive ultrasound system, it will be appreciated that the system and method of conducting ablation therapy in combination with tissue characterization may be accomplished throughout the body whether tissues are accessed through natural openings or through openings formed through the skin. In addition, the same techniques may be applied to external tissue of the body.

[0055] The controller **210** is connected to the processor **220**, which is typically an integrated circuit with power, input, and output pins capable of performing logic functions, an imaging energy generator **222**, and the ablation source **225**. The processor **220** may include any one or more of a microprocessor, a controller, a digital signal processor (DSP), an application specific integrated circuit (ASIC), a field-programmable gate array (FPGA), or equivalent discrete or integrated logic circuitry. In some examples, processor **220** may include multiple components, such as any combination of one or more microprocessors, one or more controllers, one or more DSPs, one or more ASICs, or one or more FPGAs, as well as other discrete or integrated logic circuitry. The functions attributed to processor **220** herein may be embodied as software, firmware, hardware or any combination thereof.

[0056] The processor **220** may include one or more programmable processor units running programmable code instructions for implementing the ablative methods described herein, among other functions. The processor **220** may be integrated within a computer and/or other types of processor-based devices suitable for a variety of intravascular applications, including, by way of non-limiting example, ablation, intravascular imaging, and tissue characterization. The processor **220** can receive input data from the controller **210**, a memory **245**, a characterization database **250**, accessory devices **240**, the imaging apparatus **180**, and/or the ablative element **170** directly or via wireless mechanisms. The processor **220** can interpret and use such input data to generate control signals to control or direct the operation of the catheter **110**. In some embodiments, the user can program or direct the operation of the catheter **110** and/or the accessory devices **240** from the controller **210** and/or the GUI **215**. In some embodiments, the processor **220** is in wireless communication with the imaging apparatus **180** and/or the ablative element **170**, and can receive data from and send commands directly to the imaging apparatus **180** and/or the ablative element **170**.

[0057] In various embodiments, the processor **220** is a targeted device controller that may be connected to a power source **230**, accessory devices **240**, the memory **245**, and/or the ablation source **225**. In such a case, the processor **220** is in communication with and performs specific control functions targeted to a specific device or component of the system **100**, such as the imaging apparatus **180** and/or the ablative element **170**, without utilizing user input from the controller **210**. For example, the processor **220** may direct or program the imaging apparatus **180** and/or the ablative element **170** to function for a period of time without specific user input to the controller **210**. In some embodiments, the processor **220** is programmable so that it can function to simultaneously control and communicate with more than one component of the system **100**, including the accessory devices **240**, the power source **230**, and/or the ablation source **225**. In other embodiments, the system includes more than one processor and each processor is a special purpose controller configured to control individual components of the system.

[0058] In the pictured embodiment, the controller **210** is configured to couple the imaging apparatus **180** to the imaging energy generator **222**. In embodiments where the imaging apparatus **180** is an intravascular ultrasound (IVUS) transducer(s), the imaging energy generator comprises an ultrasound energy generator. Under the user-directed operation of the controller **210**, the imaging energy generator **222** may generate a selected form and magnitude of energy (e.g., a particular energy frequency) best suited to a particular application. At least one supply wire (not shown) passing through the body **120** and the interface **140** connects the imaging apparatus **180** to the imaging energy generator **222**. The user may use the controller **130** to initiate, terminate, and adjust various operational characteristics of the imaging energy generator **222**.

[0059] The ablation source **225** may be configured to produce thermal energy that may be directed to the ablative element **170**. As illustrated in FIG. **1**, the ablative element **170** is connected to the ablation source **225**. In some embodiments, wires or conductors extending through the lumen **125** of the body **120** connect to the conductor **145** and/or the interface **140**, which ultimately couples the ablative element **170** to the ablation source **225**. Under the control of the user or an automated control algorithm in the processor **220**, the ablation source **225** generates a selected form and magnitude of thermal energy, including, without limitation HIFU energy or RF energy. The ablation source **225** may be utilized with any of the catheters described herein for delivery of a thermal electric field with the desired field parameters, i.e., parameters sufficient to thermally induce ablation and/or neuromodulation via heating, cooling, and/or other mechanisms such as electroporation. It should be understood that the catheters described herein may be electrically connected to the ablation source **225** even though the ablation source **225** is not explicitly shown or described with respect to each embodiment. The user may direct whether the ablative element **170** is energized with monopolar or bipolar RF energy by using the controller **210** or programming the processor **220**.

[0060] In the pictured embodiment, the ablation source **225** is located external to the patient. In other embodiments, the ablation source **225** may be positioned internal to the patient. In alternative embodiments, the ablation source may additionally comprise or may be substituted with an alternative thermal energy generator, such as, by way of non-limiting example, a thermoelectric generator for heating and/or cooling (e.g., a Peltier device) or a thermal fluid injection system for heating and/or cooling. For embodiments that provide for the delivery of a monopolar electric field via an electrode on the ablative element **170**, a neutral or dispersive ground pad or electrode (not shown) can be electrically connected to the ablation source **225**.

[0061] The power source **230** may be a rechargeable battery, such as a lithium ion or lithium polymer battery, although other types of batteries may be employed. In other embodiments, any other type of power cell is appropriate for power source **230**. The power source **230** provides power to the system **100**, and more particularly to the processor **220**. The power source **230** may be an external supply of energy received through an electrical outlet. In some examples, sufficient power is provided through on-board batteries and/or wireless powering.

[0062] The various peripheral devices **240** may enable or improve input/output functionality of the processor **220**. Such peripheral devices **240** include, but are not necessarily limited to, standard input devices (such as a mouse, joystick, keyboard, etc.), standard output devices (such as a printer, speakers, a projector, graphical display screens, etc.), a CD-ROM drive, a flash drive, a network connection, and electrical connections between the processor **220** and other components of the system **100**. By way of non-limiting example, a processor may manipulate signals from the imaging apparatus **180** to generate an image on a display device, may coordinate aspiration, irrigation, and/or thermal neuromodulation, and may register the treatment with the image. Such peripheral devices **240** may also be used for downloading software containing processor instructions to enable general operation of the catheter **110**, and for downloading software implemented programs to perform operations to control, for example, the operation of any auxiliary devices attached to the catheter **110**. In some embodiments, the processor may include a plurality of processing units employed in a wide range of centralized or remotely distributed data processing schemes.

[0063] The memory or database **245** is typically a semiconductor memory such as, for example, read-only memory, a random access memory, a FRAM, or a NAND flash memory. The memory **245** interfaces with processor **220** such that the processor **220** can write to and read from the memory **345**. For example, the processor **220** can be configured to read data from the imaging apparatus **180** and write that data to the memory **345**. In this manner, a series of data readings can be stored in the memory **245**. The processor **220** is also capable of performing other basic memory functions, such as erasing or overwriting the memory **245**, detecting when the memory **345** is full, and other common functions associated with managing semiconductor memory. In the pictured embodiment, the memory **245** comprises a database of characterization data.

[0064] The characterization application **250** is adapted to receive data (e.g., imaging data) from the processor **220** and/or the controller **210**. The characterization application may exist as a single application or as multiple applications, and be locally or remotely stored. In an exemplary embodiment, the characterization application **250** is adapted to receive and store characterization data (e.g., tissue type, ablation characteristics, and secondary parameters). In particular, to create a database of characterization data, after a tissue specimen has been imaged and IVUS data has been collected, a histology correlation is prepared by collecting, dissecting, and preparing the tissue specimen for slide review (e.g., fixing and staining the tissue specimen with a process that is well known in the art). Slide review allows a clinician to identify and characterize the tissue type(s) and/or histological chemicals/markers (i.e., chemicals and/or markers associated with particular tissue types) found within the specimen. It should be noted that the particular method used to characterize the tissue specimen is not a limitation of the present disclosure, and all tissue specimen characterization methods generally known to those skilled in the art are within the scope of the present disclosure.

[0065] In one embodiment, the tissue specimen comprises a region of ablated tissue. The tissue may be any of a variety of tissue types, including, by way of non-limiting example, muscle tissue, fatty tissue, fibrous tissue, fibrolipidic tissue, vessel tissue (e.g., by way of non-limiting example, compositional tissues such as vessel wall, luminal wall, medial-advential boundary), neural tissue, calcific tissue, necrotic tissue, calcified-necrotic tissue, collagen compositions, cholesterol deposits, and/or adventitial tissue. In addition, the

tissue specimen can comprise ablated tissue in any of a variety of stages of ablation, including, by way of non-limiting example, minimally ablated tissue, moderately ablated tissue, majorly ablated tissue, and/or completely ablated tissue. The characterization data gathered from the tissue specimens can include all other identifiable characteristics generally known to those of skill in the art. In some embodiments, tissue specimens having a full range of varying degrees of ablation per tissue type are interrogated (imaged and histologically sectioned) for inclusion in the characterization application **250**.

[0066] The identified tissue type(s) and/or characterization conclusions are provided to the characterization application **250** as characterization data. In some embodiments, the characterization data is provided via the GUI **215** or another input device that is electrically coupled to the controller **210** and/or the processor **220**. The characterization data is then stored in the memory or database **245**.

[0067] In one embodiment, the characterization application **250** is adapted to create a histology image of the tissue specimen and to identify the at least one corresponding region on an image (e.g., an IVUS image) of the tissue specimen. A region of interest (ROI) on the histology image (which may be provided to the characterization application **250** via the GUI **215** or another input device in the form of digitized data that is used to create the histology image) can then be identified by the user. The ROI may be characterized by the characterization data, and can comprise the whole tissue specimen or only a portion thereof. The characterization application is adapted to identify a corresponding region on the scanned image (e.g., IVUS image).

[0068] In some instances, the histology image may need to be morphed or warped to accurately match and substantially fit the contour of the IVUS image (thereby removing histological preparation artifacts). In some embodiments, therefore, the characterization application **250** is adapted to morph or warp the histology image to accurately match the IVUS image. Specifically, the characterization application **250** is configured to identify at least one landmark common to both the histology image and the IVUS image and is adapted to use various algorithms to substantially align the two images. The landmark may comprise an anatomic landmark (such as, by way of non-limiting example, side-branching vessels, a vessel wall, and a tumor border) or a marker (such as, by way of non-limiting example, a suture tie or an inked mark). In one embodiment, the characterization application is adapted to use a first algorithm (e.g., a morphometric algorithm) to substantially align the corresponding landmarks and a second algorithm (e.g., a thin plate spline (TPS) deformation technique) to substantially align the non-landmark portions of the object.

[0069] In one embodiment, the characterization application **250** is further adapted to determine and store at least one parameter associated with the ROI portion of the IVUS image. In particular, the characterization application **250** is adapted to identify the IVUS data (i.e., the raw backscatter data) that corresponds to the ROI identified on the IVUS image (i.e., the IVUS data that was originally used to create the ROI on the IVUS image). Different types and densities of tissue absorb and reflect emitted energy differently. Each reflected signal is characteristic of the type of tissue and the condition of the tissue that reflected it. Differences in the reflected signal along each path can be determined by performing analysis on the signals. As a result, identifying different signal characteristics along each reflected path allows for a correlation to the type of tissue and the condition of the tissue associated with those particular signal characteristics. As will be described below, the signal characteristics of each reflected signal can serve as a signature for different types of components within the scanned tissue, including, for example and without limitation, necrotic plaque components within an artery, minimally ablated muscle tissue, or completely ablated neural tissue.

[0070] The at least one parameter is then stored in the memory **245**, where it is linked to the characterization data associated with the ROI. Each parameter may be associated with more than one tissue type or degree of ablation. For example, a first parameter may be common to multiple tissue types and multiple degrees of ablation. In some embodiments, signal analysis (i.e., frequency analysis, etc.) is performed on the identified IVUS data before the parameters are identified because the frequency information can serve as a "signature" for a particular tissue type or characteristic. The IVUS data may be converted or transformed into the frequency domain to identify the specific frequency spectrum of the ROI. The characterization application **250** and this transformation process are described in further detail below with reference to FIG. **3**.

[0071] It should be appreciated that the number and location of the components depicted in FIG. **1** are not intended to limit the present invention, and are merely provided to illustrate an exemplary environment in which the catheters, systems, and methods described herein may operate. Thus, for example, a system having a plurality of databases and/or a remotely located characterization application is within the spirit and scope of this disclosure.

[0072] An exemplary method of populating the database or memory **245** is illustrated in FIG. **2**. Specifically, at step **300**, IVUS data (i.e., RF backscatter data) is collected from a portion of the specimen. This data is used to create an IVUS image, which may be a two dimensional image or a three dimensional image, at step **305**. At step **310**, the scanned portion of the specimen is dissected and/or cross-sectioned and a tissue type (and/or characterizations thereof) is identified. At step **315**, this characterization data is transmitted to the tissue characterization system **100**. In particular, the characterization data may be transmitted to the memory **245** and/or the characterization application **250**. The characterization data may include a variety of identifying and/or characterization information, such as, for example and without limitation, information about the type of tissue, the different cell components within the tissue, and the degree of ablation (e.g., varying cellular changes due to ablation). As a further feature, IVUS data may be collected for an unablated ROI and compared to an existing database to obtain an initial characterization. Ablation energy can then be applied to the ROI to change the nature of the tissue in the ROI. Then, the ROI tissue may be dissected and/or cross-sectioned. At step **320**, an image of the cross-sectioned object is created and an ROI is identified (e.g., by a user and/or the processor **220**). The image may be two-dimensional or three dimensional. At step **325**, this image may be morphed, if needed, to substantially match the cross-section image to the IVUS image formed at step **305**. This may include identifying and matching up at least one common landmark on the two images using an algorithm, as described above. At step **330**, the ROI is mapped to the IVUS image and associated IVUS data is identified. Image analysis (including, for example and without limitation, spectral

analysis and frequency analysis) is then performed on the associated IVUS data at step **335**, and at least one parameter is identified at step **340**. At step **345**, the at least one parameter and the characterization data is stored in the memory **245** and/or the characterization application **250**. In some embodiments, the at least one parameter is stored such that it is linked to the characterization data.

[0073] The process depicted in FIG. **2** is repeated for each tissue component or section desired to be identified and/or characterized, and may be repeated for each component as many times as desired in order to obtain an accurate range of signal properties. With the database or memory **245** populated with an accurate range of signal properties corresponding to several tissue types at various degrees of ablation, a tissue type and ablation level can be identified when the acquired parameters substantially match parameters stored in the memory **245**, as described in further detail below with respect to FIG. **3**.

[0074] FIG. **3** illustrates one embodiment of an ablation system **400** configured to ablate, scan, and analyze one or more characteristics of an object **405**, which may be located on the external surface or inside a patient's body, to characterize the tissue components and/or degree of ablation associated with the object **405**. In the pictured embodiment, the system **400** includes an ablation system console **410** that includes data processing, analysis, and/or display capabilities. The ablation system console **410** may comprise components found within the ablation system **100**, including, for example and without limitation, the GUI **215**, the imaging energy generator **222**, the ablation source **225**, the controller **210**, and the processor **220**. The ablation system console **410** may be a general purpose computer configured to communicate with and collect data from the catheter **110**. In another embodiment, the console **410** may be a small portable ablator and scanner. The ablation system console **410** is in communication with the characterization apparatus **250**, the memory **245**, and the power source **230**. In some embodiments, the ablation system console **400** is in communication with the accessory devices **240**.

[0075] To perform a guided ablation procedure of the object **405**, the catheter **110** may maneuvered such that the ablative element **170** and the imaging apparatus **180** are positioned near the object **405**. In some instances, the object **405** may be located within a vessel in a patient's body. FIGS. **4** and **5** illustrate the layers of a normal artery **420**. The innermost layer that defines the lumen **425** of the artery **420** comprises the intima **430**. In a healthy artery, the intima is relatively thin. As plaque develops and infiltrates the intima, it increases in thickness. Medial layers **435** surround the intima **430**. The medial layers **435** include smooth muscle tissue and provide structural integrity for the artery **420**. The medial layers are made up of three layers that include two elastic layers, an inner elastic lamina **436** and an outer elastic membrane **437**, along with a thicker muscular media **438**. The outermost layer is the adventitia **440**, which typically comprises fibrous tissue such as collagen.

[0076] FIG. **6** illustrates the distal portion **160** of the catheter **110** positioned within a vascular lumen **445** of an occluded artery **450**, in which the lumen **445** has been blocked by atherosclerosis. When the lumen of an artery has been severely of completely occluded, as shown in FIG. **6**, a healthcare provider may not be able to advance a therapeutic device through the stenosis without first creating a passage through the occlusion. In order to reduce the risk of perforating the blood vessel and/or inadvertently injuring non-target layers of the blood vessel by ablation, it is important for the user to be able to characterize the tissue layers and tissue components within the lumen to distinguish the regions that are more susceptible to injury and to evaluate the degree of ablation through the ablation procedure. The devices, systems, and methods of the present disclosure provide a user with the tools to ablate the occlusive tissue and tunnel a passageway through the occlusion and enhance blood flow through the artery. Moreover, the devices, systems, and methods of the present disclosure provide a user with the tools to create such a passageway while guarding against inadvertently over-ablating tissue and/or ablating non-target areas or tissue types.

[0077] In FIG. **6**, the object **405** is the occlusion or stenosis located within the lumen **445**. In some instances, the object **405** comprises a chronic total occlusion of the vessel **450** as shown in FIG. **6**. The user can advance the catheter **110** through the lumen **445** until the ablative element **170** and the imaging apparatus **180** are situated adjacent the object **405**. The user can then activate the imaging apparatus **180** to image at least a portion of the object **405**. In some embodiments, the imaging apparatus **180** is oriented at an angle to the longitudinal axis of the catheter **110** so that as the imaging apparatus is rotated, it will emit ultrasound energy in a conical, side-looking pattern or field of view **223** (shown in FIG. **1**). In other embodiments, the imaging apparatus may emit ultrasound energy in a forward-looking pattern or field of view **223**. The imaging apparatus **180** then collects waves of ultrasound energy reflected back from the object **405** and surrounding tissues as data.

[0078] With reference back to FIG. **3**, the data collected by the imaging apparatus **180** of the catheter **110** is initially in the form of raw data **460** of the reflected signals along each scan line. The data **460** is then refined or transformed into a format that can be analyzed by the characterization application **250** to determine various signal characteristics that may identify associated tissue types within and adjacent the scanned object **405**. In the pictured embodiment, the characterization application **250** includes several component parts, including the memory or database **245**, a signal analyzer logic **465**, and a correlation logic **475**. The signal analyzer logic **465** is configured to process and analyze the data **460** to identify, in real-time, the various components of the scanned object **405**. The signal analyzer logic **465** is configured to identify various types of tissue and/or tissue components and to provide an assessment as to the degree of ablation based on the type of tissues and/or tissue components identified, an amount of ablated tissue identified, or both.

[0079] The signal analyzer logic **465** includes logic to transform the data **460** into an analyzable domain and analyze the transformed information from the signals to determine one or more signal properties **470**. For example, each scan line can be analyzed in segments and signal properties can be determined for each segment. The segments may be equal in size, different in size, equally spaced from each other, overlapping each other, and/or defined in other desired ways.

[0080] The signal properties **470** are processed by the correlation logic **475**, which is configured to correlate the signal properties of the scan line segment with the type of tissue component having those or similar signal properties. In that regard, the correlation logic **475** is configured to compare and match the signal properties **470** to pre-determined or pre-generated tissue signal properties **480** contained within the

memory or database **245**. Various parameters may comprise the database of pre-determined tissue signal properties **480**. The parameters comprising the database **245** would be pertinent to both the desired application or tissue-of-interest and the imaging modality of the imaging probe (i.e., ultrasound, OCT, spectroscopy, etc.). The correlation logic **475** is configured to recognize the type of imaging modality employed by the imaging probe **115** and to use the appropriate pre-determined tissue signal properties **480** associated with that particular imaging modality. For example, if the imaging modality being used were ultrasound, the pre-determined signal properties **480** may include various parameters in the spectral domain directly associated with scatter size, density, viscosity, and their acoustic properties such as impedance and attenuation coefficient. The database also contain macro-data about overall ablation characteristics, such as size, cell directionality, morphology, as well as the likelihood of bubble formation during ablation.

[0081] In some embodiments, the imaging system **100** may employ a multitude of different imaging modalities to image the same object **405**. In some embodiments, these imaging modalities are used sequentially, whereas in other embodiments, the different imaging modalities are used simultaneously (e.g., using a multi-modality imaging apparatus). In one embodiment, the imaging probe **115** may be configured to image the object **405** using a multitude of different imaging modalities (e.g., OCT and ultrasound). In some embodiments, the correlation logic **475** is configured to combine or analyze the pre-determined signal properties **480** associated with each imaging modality used to perform a tissue characterization **485**.

[0082] Secondary parameters **490** may be included within the data structure to reflect the type of tissue and/or the particular pre-existing conditions or differential diagnoses of the patient. The secondary parameters **490** may be utilized by the correlation logic to more accurately compare and match the signal properties **470** to the pre-determined signal properties **480**. One secondary parameter **490** may comprise the type of tissue observed within the object **405**. In some embodiments, the imaging system **400** can determine the type of tissue or anatomic region observed with the object **405** and use this as a secondary parameter before automatically selecting the appropriate pre-determined signal properties associated with the type of tissue or anatomic region or appropriately adjusting the pre-determined signal properties **480** to reflect the type of tissue or anatomic region. In other embodiments, the user may enter the type of tissue or anatomic region manually (e.g., via the GUI **215** attached to the ablation system console **410**), and either the user or the imaging system **400** may select the appropriate pre-determined signal properties **480** associated with that type of tissue/region or appropriately adjust the pre-determined signal properties to reflect this type of tissue/region. For example, if the tissue being scanned is a calcified vascular plaque, either the user or the imaging system **400** may select the appropriate pre-determined signal properties **480** associated with calcified plaque tissue or appropriately adjust the pre-determined signal properties to reflect ablative changes observed for calcified plaque tissue. In some embodiments, a three-dimensional data set can be constructed with the imaging apparatus **180** to provide further parameters related to tissue type and matched back to the secondary parameters **490** in the database **245** that contains these pre-determined ablation values for various tissue types.

[0083] Another secondary parameter **490** associated with the imaging may comprise the particular frequency or harmonics employed by the imaging apparatus **180**. For example, the database **245** may contain particular sets of pre-determined signal properties **480** associated with particulars frequencies or harmonic patterns.

[0084] Other secondary parameters **490** included within the database **245** of pre-determined signal properties **480** may relate to the particular pre-existing conditions or differential diagnoses of the patient. For example, in the context of imaging atherosclerosis, it might be important to relate whether a patient is diabetic and/or hypertensive to better analyze the signal properties and to give an appropriate disease risk level. The secondary parameters **490** may be entered into the database **245** by the user or be selected from a pre-established menu or list of options already present within the database.

[0085] In one embodiment, the pre-determined signal properties **480** and secondary parameters **490** discussed above are configured in the database **245** that associates measured or observed signal properties **470** to pre-determined tissue signal properties **480** that reflect specific types of tissue component such as, by way of non-limiting example, fluid, blood, normal tissue, necrotic tissue, fatty tissue, or calcific tissue, with varying degrees of ablation. The database **245** may be implemented in a variety of ways including a data file, an array, a table, a linked list, a tree structure, a database, combinations of these and multiple components of each if desired. The correlation logic **475** matches the signal properties **470** from a path or scan line, or a region of the path or scan line, to the pre-determined properties **480** and outputs a tissue characterization **165** that identifies the type of tissue and the level of ablation. In some embodiments, the correlation logic **475** weights the pre-determined properties with other parameters (such as the secondary parameter of tissue type and/or anatomic region) before matching the signal properties **470** from a path or scan line, or a region of the path or scan line, to the weighted pre-determined properties **480** and outputting the tissue characterization **485**. The system **100** then repeats the analysis for other segments on the current path or scan line and then for the other paths or scan lines. In some embodiments, the system **400** may repeat the analysis for the imaging data received by each of the other imaging modalities. In some such embodiments, the system **400** utilizes the correlation logic **475** to combine the correlation conclusions from different imaging modalities to arrive at a final tissue characterization **485**.

[0086] Returning to the example shown in FIG. **6**, in which the object **405** is the occlusion located within the lumen **445** of the vessel **450**, the imaging apparatus **180** collects waves of ultrasound energy reflected back from the object **405** and surrounding tissues as raw data **460**. In the pictured embodiment, the imaging apparatus is located proximal to the ablation element **170**. As described above, in other embodiments, the imaging apparatus may be located distal to the ablation element, and may enable forward-looking imaging. In some embodiments, the catheter **110** employs two imaging apparatuses positioned on either side of the ablative element. In embodiments using ultrasound imaging, the transducers of the imaging apparatus **180** would be pulsed along scan lines and then acquire echoes of backscatter signals reflected from the tissue along each scan line. The backscatter signal is characteristic of the type of tissue (including the tissue composition and level of ablation) that reflected it. Differences in the backscatter signal along each scan line can be determined

by performing a frequency analysis, using spectral analysis and autoregressive coefficients, a wavelet decomposition, and/or a curvelet decomposition on the signals. As a result, identifying different signal characteristics along each scan line allows for a correlation to the type of tissue and a certain level of ablation associated with those particular signal characteristics. As described above, signal characteristics of the backscattered signal can serve as a signature for different types of components and ablative effects within an object, including, for example, plaque components within an artery or the level of ablation within the plaque.

[0087] With reference again to FIG. **3**, the data collected by the imaging apparatus **180** is initially in the form of raw ultrasound data **460** of the backscattered signals along each scan line. The ultrasound data **460** is then analyzed to determine various signal characteristics that may identify associated tissue types. The signal analyzer logic **465** is configured to process and analyze the data **460** to identify, in real-time, the components and level of ablation of the scanned occlusion. Because different types and densities of tissue absorb and reflect the ultrasound pulses differently, the signal analyzer logic **465** utilizes the reflected backscatter data to assemble a two-dimensional or three-dimensional ultrasound characterization of the object **405** from hundreds of pulse/acquisition cycles. In this embodiment, the logic is configured to identify various types of plaque components, vessel wall structures such as intima, medial layers and adventitia, and ablation levels within the object **405**, and to provide an assessment as to the next step in the patient's ablative procedure based on the type of plaque identified, an amount of plaque component identified, and/or the level of ablation including potential damage to the vessel wall.

[0088] In the pictured embodiment, the signal analyzer logic **465** includes logic to transform the data **460** to the frequency domain and analyze frequency information of the signals to determine one or more signal properties **470**. Illustrated in FIG. **7** is one example of data of one scan line **550** plotted as voltage over time. The scan line can be analyzed in segments represented by the windows illustrated in the figure, such as window **555**. The data within the window **555** is transformed in this embodiment to a power spectrum density plot as shown in FIG. **8**. Signal properties from the segment **555** are determined from the power spectrum of FIG. **8**. Signal properties, in this case also referred to as spectral properties, may include the y-intercept, maximum power, mid-band fit, minimum power, frequencies at maximum and minimum powers, slope of regression line, integrated backscatter, or combinations of these or others.

[0089] Illustrated in FIG. **9** is one embodiment of a signal analyzer logic **650** for processing and analyzing radio frequency ultrasound data. It will be appreciated that the signal analyzer logic **650** may be embodied as part of an ultrasound imaging console, an ablation system console, or as part of a separate system that receives raw radio frequency data from an ultrasound apparatus. If the radio frequency data is in analog form, a digitizer **655** may be provided to digitize the data. A signal processing logic **660** is configured to process each scan line of the ultrasound data and transform it to a format that can be analyzed. To reduce processing time, a border detection logic **665** may be used to determine the location of the borders of the object being scanned. Because the analysis in FIG. **6** is most interested in the components of the vascular occlusion **600**, scan line data outside of the vessel **450** can be filtered and removed. One example of a border detection system is described in U.S. Pat. No. 6,381,350, entitled "Intravascular Ultrasonic Analysis Using Active Contour Method and System," which is incorporated herein by reference for all purposes.

[0090] After border detection, the scan line data is transformed. Of course, border detection can be performed after transformation. Transformation logic **670** is configured to transform the remaining scan line data into a format suitable for analysis. In general, the transformed format should match the same format used to build the pre-determined signal properties of the object component. In one embodiment, the transformation logic **670** transforms the data to a power spectrum plot of frequency versus power output as shown in FIG. **8**. Various transformation algorithms include a Fourier transformation, Welch periodograms, and auto-regressive modeling. Other types of transformations can include transforming the data to wavelets that provide an image with frequency and time information. For example, other signal processing techniques may include wavelet decomposition or curvelet decomposition to deliver parameters that are relevant for discrimination between tissue types while not being influenced by the system transfer function of the imaging system and probe. Another transformation includes using impedance, rather than frequency, which gives an image of acoustic impedance. In this format, different tissue components have different impedance properties that provide different signal reflections. In the following example, a power spectrum density plot is used from a Fourier transformation.

[0091] With further reference to FIG. **9**, a spectral analysis logic **675** analyzes the power spectrum of the scan line data to determine its spectral properties **680**. As mentioned previously, spectral properties or parameters may include maximum power, frequency at the maximum power, minimum power, the frequency at the minimum power, the slope, y-intercept, mid-band fit, and integrated backscatter. The spectral parameters **680** are then inputted to a classification logic **685** that attempts to classify the spectral parameters associated to a particular scan line segment with previously measured spectral parameters from a known tissue component. As mentioned above, the signal analyzing techniques need not be limited to spectral analysis and autoregressive coefficients, but could entail use of wavelet decomposition or curvelet decomposition to deliver parameters that may be used by the classification logic **685** to discriminate between tissue types.

[0092] In one embodiment, a classification data structure **690** contains a statistical classification of measured or observed spectral properties (and/or other properties) associated with particular types of tissue and/or ablated tissue components. The classification data structure **690**, in one embodiment, is previously generated from laboratory studies that correlate ultrasound data analysis of ablated tissue samples with their corresponding histology sections, as described above in relation to FIG. **2**

[0093] A variety of pattern recognition approaches may be used by the classification logic **685** and/or correlation logic **475**. For example, the database **245** of relevant secondary parameters **490** and pre-determined tissue signal properties **480** could be the starting point of various pattern recognition approaches, covering, but not limited to, classification trees, random forests, neural networks, regression trees, principal components, and/or a combination of these to arrive at an accurate tissue characterization. For example, in one embodiment, the pre-determined tissue signal properties **480** and/or the secondary parameters **490** may be stored in the database

245 as a classification tree or a regression tree having branch node conditions based on the pre-determined tissue signal properties and one or more leaf nodes that identify a tissue component with a particular level of ablation. In another embodiment, the pre-determined tissue signal properties **480** may be embodied in the database as an artificial neural network having one or more nodes that identify a tissue component with a particular level of ablation. In some embodiments, the classification logic **685** and/or the correlation logic **475** may utilize a random forest classifier to analyze a number of classification trees (e.g., different classification trees based on different pre-determined signal properties or based on a multitude of different imaging modalities) to arrive at a tissue characterization.

[0094] Continuing the analysis for other segments of a backscatter signal and segments from other scan lines collected from a scan, the system can provide helpful identification of the types of components within the object **405**. Additionally, based on the location of a segment along a scan line, the system can make a determination as to the location of the corresponding tissue within the object **405**. Then by combining data from adjacent segments and adjacent scan lines having the same tissue component, the system can estimate the size and/or volume of the tissue component. This may be important because certain components may create a greater risk of inadvertent rupture and/or injury based on their tissue type, location, and/or size, and it would be helpful to identify these conditions prior to continuing ablation. Similarly, in the evaluation of other conditions, using ultrasound or other imaging modalities, certain components may indicate a greater need for higher levels of ablation than others.

[0095] With reference again to FIGS. **3** and **6**, the signal properties **470** are processed by the correlation logic **475** configured to correlate the signal properties of the scan line segment with the type of vascular component and a level of ablation having those or similar signal properties. In that regard, the correlation logic **475** is configured to compare and match the signal properties **470** to pre-determined tissue signal properties **480**. In some embodiments, the correlation logic may first identify the type of vascular component, and then identify the level of ablation. In other embodiments, the correlation logic may identify the type of vascular component and its level of ablation at once. In some embodiments, the type of vascular component may be a secondary parameter as described above. In one embodiment, the pre-determined signal tissue properties **480** are configured in a database or data structure that associates measured or observed signal properties to a type of vascular component such as intima, media, adventitia, and types of plaque components that may be present. Various plaque components include calcium, fibrous, fibrolipid, and calcified-necrosis.

[0096] The correlation logic **475** matches the signal properties **470** from a scan line, or a region of the scan line, to the pre-determined properties **480**, factors in any relevant secondary parameters **490**, and outputs a tissue characterization **485** that identifies the type of tissue and the level of ablation of that tissue. The system may then repeat the analysis for other segments on this scan line and for the other scan lines. Thus, the tissue characterization **485** can identify the more ablated, less ablated, and non-ablated areas in real-time during the ablation procedure.

[0097] Illustrated in FIG. **10** is one embodiment of a methodology **700** associated with analyzing ultrasound signals and identifying the type of tissue component that corresponds to the signals. The illustrated elements denote "processing blocks" and represent computer software instructions or groups of instructions that cause a computer or processor to perform an action(s) and/or to make decisions. Alternatively, the processing blocks may represent functions and/or actions performed by functionally equivalent circuits such as a digital signal processor circuit, an application specific integrated circuit (ASIC), or other logic device. The diagram does not depict syntax of any particular programming language. Rather, the diagram illustrates functional information one skilled in the art could use to fabricate circuits, generate computer software, or use a combination of hardware and software to perform the illustrated processing. It will be appreciated that electronic and software applications may involve dynamic and flexible processes such that the illustrated blocks can be performed in other sequences different than the one shown and/or blocks may be combined or separated into multiple components. They may also be implemented using various programming approaches such as machine language, procedural, object-oriented, artificial intelligence, or other techniques. This applies to all methodologies described herein.

[0098] In other embodiments, the steps of the methodology **700** may be employed to analyze imaging signals received from another imaging modality and to identify the type of tissue component that corresponds to the signals. In such embodiments, instead of receiving ultrasound data and analyzing ultrasound imaging properties such as spectral properties, the ablation system **100** may instead receive imaging data specific to the particular type of imaging modality and analyze imaging properties specifically associated with the type of imaging modality used, in light of the relevant secondary parameters.

[0099] With reference to FIG. **10**, analysis may begin as ultrasound data is received in real time during a scan or after a scan is completed (block **705**). If the ultrasound data is still in the raw radio frequency form, it is digitized (block **710**). In one embodiment, the digitized data is analyzed along a scan line, in one or more segments. The embodiment of FIG. **10** illustrates the analysis of one segment of data. Although not shown in FIG. **10**, the processing repeats for each segment of a scan line and repeats for other scan lines until complete or until processing is stopped. Optionally, the process may allow for changing the properties of how a scan line is segmented such as defining various sizes and intervals of segments.

[0100] For a scan line being analyzed, a border detection algorithm may be used to identify the borders of the target object (block **715**) and the analysis can be focused on the scan line data corresponding to the target object. Since the scan is not intravascular in this example, a scan line that passes through the target object may pass through two or more walls of the object. For example, in one embodiment, the region of interest for the scan is a vascular object such as a carotid body. The border detection algorithm may identify the borders of the carotid body and/or an adjacent vessel. A number of scan lines may pass through two walls of the carotid body. Thus, the border detection would attempt to search and identify at least two borders along a scan line. Many different border detection methods are available including analyzing signal properties of the scan line, reconstructing an image from the ultrasound data and detecting borders from the image data, and other methods. Scan line data outside the borders of the target object may be ignored or removed from analysis if desired.

[0101] The scan line can be segmented and analyzed by segment. In one embodiment, the signal data from a segment is transformed to a power spectrum form (block **720**) such as in FIGS. **7** and **8**. Spectral properties may be determined from the power spectrum (block **725**) which may include the y-intercept, maximum power, mid-band fit, minimum power, frequencies at maximum and minimum powers, slope of regression line, integrated backscatter, and/or other properties from the power spectrum. Other properties may be determined from wavelet decomposition or curvelet decomposition techniques. The spectral properties and/or other properties of the scan line data are then compared to corresponding pre-determined properties of known tissue components to determine which type of component best matches the scan line spectral properties.

[0102] In one embodiment, the pre-determined tissue properties are structured as a classification tree generated from statistical analysis of how the properties correlate to a type of tissue component. The scan line spectral properties are then processed through the tree (block **730**), traversing branches based on how the spectral properties meet the conditions of the branch nodes. The tree is traversed to a leaf node that identifies a type of tissue component. The spectral properties of the scan line segment are then characterized as this type of component (block **735**). The system **100** may also output an assessment score of the observed ablation level within the tissue component (block **740**).

[0103] With reference to FIG. **11**, once a sufficient amount of data is analyzed and the tissue type and ablation level of the object **405** are characterized, a diagnostic logic **750** may be included in the ablation system **400** to generate an ablation assessment **755** as to the level of progress made in the patient's treatment in light of the patient's preexisting health conditions, symptoms, and differential diagnosis. For example, in some embodiments, the diagnostic logic may quantify the appropriate level of ablation to be employed next or the diagnostic logic may indicate that the treatment is complete based on the types of tissues and levels of ablation observed. Additionally, the diagnostic logic **750** may be configured to reconstruct the received data into displayed **2**D or **3**D images, and the identified components may be visually distinguished on a display **760**. In some embodiments, the display **760** may be included as a component of the ablation system console **410** (shown in FIG. **3**). In other embodiments, the display **760** may be an independently located device that communicates either wirelessly or through a wired connection with the ablation system **400**. In some embodiments, the display **760** may be remotely located.

[0104] Based on the assessment of the scanned object or region of interest, the diagnostic logic **750** can be configured to generate a score indicating the level of ablation. For example, in one instance, if the scanned object of interest was a nerve or nerve bundle, a score of zero may indicate no ablation or a healthy nerve while a score of ten may indicate a high level of ablation or a non-conductive nerve. Depending upon the real-time score, the user and/or the processor **220** (shown in FIG. **1**) may decide to continue ablative therapy at the same level of ablative energy, reduce the level of ablative energy, increase the level of ablative energy, or discontinue ablative therapy at that location. The score may also be recorded and stored in the memory **245**, and later used to create an anatomical mapping of the ablation procedure. In one example, the user may set the desired score to a specific number, i.e. **6**, and the system will continue ablation in a ROI until the score **6** is reached without user input.

[0105] For the example shown in FIG. **6**, the tissue characterization **485** may output a tissue characterization of the object **405** as a vascular plaque **600** containing a focal area of calcification **605**. Based on the tissue characterization **485** and/or the ablation assessment **755** (shown in FIG. **11**), the user and/or the system **400** may alter the level of ablation applied next to the object **405**. In some embodiments, the system may accomplish this by appropriately tuning the ablative element **180** and/or the amount of energy provided by the ablation source **225** (shown in FIG. **1**). For example, in FIG. **6**, once the tissue characterization of an area of calcification was reported by the characterization application **250**, the user and/or the processor **220** may increase the level of ablative energy emitted from the ablative element **180** in order to more effectively ablate the calcified area **605**.

[0106] FIGS. **12-14** illustrate advancement of the ablation catheter **110** and the modification of applied ablative energy through the occlusion **600**. In FIG. **12**, the catheter **110** is shown after having ablated through a portion of the calcific area **605**. Based on the data received from the imaging apparatus **170**, the tissue characterization **485** and, in some instances, the ablation assessment **755** can indicate that the ablative element **180** is now positioned adjacent to a softer area of necrotic tissue **720** having low to no levels of ablation. Based on this information, the user and/or the processor **220** can decrease the level of ablative energy emitted from the ablative element **180** in order to ablate and tunnel through the necrotic area **720**. As the ablative element **180** ablates the necrotic area **720**, the user may periodically image the area with the imaging apparatus **170** and reassess the appropriate level of ablation based on the current tissue characterization **485** and/or ablation assessment **755**.

[0107] In FIG. **13**, the catheter **110** is shown after having ablated through a portion of the calcific area **605** and the necrotic area **720**. Based on the data received from the imaging apparatus **170**, the tissue characterization **485** and, in some instances, the ablation assessment **755** can indicate that the ablative element **180** is now positioned adjacent to a harder area of calcific tissue **605** having low to no levels of ablation. Based on this information, the user and/or the processor **220** can increase the level of ablative energy emitted from the ablative element **180** in order to effectively ablate and tunnel through the calcific tissue **605** without penetrating the vessel wall.

[0108] In FIG. **14**, the catheter **110** is shown after having ablated through the calcific area **605**. Based on the data received from the imaging apparatus **170**, the tissue characterization **485** and, in some instances, the ablation assessment **755** can indicate that the ablative element **180** is now positioned beyond the occlusion **600** within the lumen **445** of the vessel **450**. Based on this information, the user and/or the processor **220** can stop the emission of ablative energy from the ablative element **180**. In some instances, the user may ablate more of the occlusion **600** than is shown in FIG. **14**. In other instances, the user may later insert other therapeutic devices, including, for example and without limitation, balloon catheters and stents, through a passageway **775** created by the ablation in order to further widen the passageways **775** and increase the cross-sectional area of the lumen **445**.

[0109] In one particular embodiment, the present disclosure relates to an apparatus, systems, and methods of using and monitoring thermal energy neuromodulation for the

treatment of various cardiovascular diseases, including, by way of non-limiting example, hypertension, chronic heart failure, and/or chronic renal failure, through tissue characterization. In some instances, embodiments of the present disclosure are configured to image and characterize tissue before, during, and/or after ablation of a carotid body. As shown in FIG. **15**, a carotid body **800** lies deep to the bifurcation of each common carotid artery **805** into an internal carotid artery **806** and an external carotid artery **807**. FIG. **15** illustrates the ablation catheter **110** positioned adjacent the carotid body **800** and within the left common carotid artery **805**. The carotid body **800** is a small, flattened, oval structure, 2 to 5 mm in diameter, with a characteristic structure composed of epithelioid cells, which are in close relation to capillary sinusoids and an abundance of nerve fibers. Surrounding the carotid body **800** is a delicate fibrous capsule. The carotid body **800** is part of the visceral afferent system of the body, containing chemoreceptor endings that respond to low levels of oxygen or high levels of carbon dioxide and lowered pH of the blood. It is supplied by nerve fibers from both the glossopharyngeal nerve **810** and the vagus nerve **815**. Specifically, the carotid body **800** detects changes in the composition of arterial blood flowing past it, and is also sensitive to changes in pH and temperature. Denervation of the carotid body has been associated with alleviation of hypertension.

[0110] In some instances, the catheter **110** may be used to ablate and monitor the ablation of the carotid body **800** to treat diseases associated at least in part with peripheral chemoreceptor hyperactivity or heightened sympathetic activity. The devices, systems, and methods of the present disclosure allow the user to appropriately reduce afferent nerve signaling from the carotid body by ablating it without inadvertently damaging the vessel wall of the carotid artery or destroying the carotid body. Thus, embodiments of the present disclosure allow the user to ablate the carotid body to a specific degree by monitoring the ablation process through tissue and ablation level characterization. Moreover, embodiments of the present disclosure may allow the user to selectively denervate the carotid body **800** (e.g., destroying afferent nerves from the carotid body while preserving nerves from the carotid sinus that conduct baroreceptor signals) by using imaging and tissue characterization to guide the ablation procedure.

[0111] In some instances, embodiments of the present disclosure are configured to image and characterize tissue during the delivery of thermal energy to the renal nerve plexus to decrease renal sympathetic activity. Renal sympathetic activity may worsen symptoms of hypertension, heart failure, and/or chronic renal failure. In particular, hypertension has been linked to increased sympathetic nervous system activity stimulated through any of four mechanisms, namely (**1**) increased vascular resistance, (**2**) increased cardiac rate, stroke volume and output, (**3**) vascular muscle defects, and/or (**4**) sodium retention and renin release by the kidney. As to this fourth mechanism in particular, stimulation of the renal sympathetic nervous system can affect renal function and maintenance of homeostasis. For example, an increase in efferent renal sympathetic nerve activity may cause increased renal vascular resistance, renin release, and sodium retention, all of which exacerbate hypertension.

[0112] Blood pressure is controlled by a complex interaction of electrical, mechanical, and hormonal forces in the body. The main electrical component of blood pressure control is the sympathetic nervous system (SNS), a part of the body's autonomic nervous system, which operates without conscious control. The sympathetic nervous system connects the brain, the heart, the kidneys, and the peripheral blood vessels, each of which plays an important role in the regulation of the body's blood pressure. The kidneys affect blood pressure by signaling the need for increased or lowered pressure through the SNS (electrical), by filtering blood and controlling the amount of fluid in the body (mechanical), and by releasing key hormones that influence the activities of the heart and blood vessels to maintain cardiovascular homeostasis (hormonal). The kidneys send and receive electrical signals from the SNS and thereby affect the other organs related to blood pressure control. They receive SNS signals primarily from the brain, which partially control the mechanical and hormonal functions of the kidneys. At the same time, the kidneys also send signals to the rest of the SNS, which can boost the level of sympathetic activation of all the other organs in the system, effectively amplifying electrical signals in the system and the corresponding blood pressure effects.

[0113] Thus, overactive sympathetic stimulation of the kidneys plays a significant role in the progression of hypertension, CHF, CRF, and other cardio-renal diseases. Heart failure and hypertensive conditions often result in abnormally high sympathetic activation of the kidneys, creating a vicious cycle of cardiovascular injury. An increase in renal sympathetic nerve activity leads to the decreased removal of water and sodium from the body, as well as increased secretion of renin, which leads to vasoconstriction of blood vessels supplying the kidneys. Vasoconstriction of the renal vasculature causes decreased renal blood flow, which causes the kidneys to send afferent SNS signals to the brain, triggering peripheral vasoconstriction and increasing a patient's hypertension. Reduction of sympathetic renal nerve activity, e.g., via renal neuromodulation or denervation of the renal nerve plexus, may reverse these processes.

[0114] By blocking afferent sympathetic activity from the kidney to the brain, renal denervation may lower the level of activation of the whole SNS. Thus, renal denervation may also decrease the electrical stimulation of other members of the sympathetic nervous system, such as the heart and blood vessels, thereby causing additional anti-hypertensive effects. In addition, blocking renal nerves may also have beneficial effects on organs damaged by chronic sympathetic over-activity, because it may lower the level of cytokines and hormones that may be harmful to the blood vessels, kidney, and heart.

[0115] Furthermore, because renal denervation reduces overactive SNS activity, it may be valuable in the treatment of several other medical conditions related to hypertension. These conditions, which are characterized by increased SNS activity, include left ventricular hypertrophy, chronic renal disease, chronic heart failure, insulin resistance (diabetes and metabolic syndrome), cardio-renal syndrome, osteoporosis, and sudden cardiac death. For example, other benefits of renal denervation may theoretically include: reduction of insulin resistance, reduction of central sleep apnea, improvements in perfusion to exercising muscle in heart failure, reduction of left ventricular hypertrophy, reduction of ventricular rates in patients with atrial fibrillation, abrogation of lethal arrhythmias, and slowing of the deterioration of renal function in chronic kidney disease. Moreover, chronic elevation of renal sympathetic tone in various disease states that exist with or without hypertension may play a role in the development of overt renal failure and end-stage renal disease. Because the reduction of afferent renal sympathetic signals contributes to

the reduction of systemic sympathetic stimulation, renal denervation may also benefit other organs innervated by sympathetic nerves. Thus, renal denervation may also alleviate various medical conditions, even those not directly associated with hypertension.

[0116] Thermal neuromodulation by either intravascular ablation (e.g., heating or cooling) may decrease renal sympathetic activity by disabling the efferent and/or afferent sympathetic nerve fibers that surround the renal arteries and innervate the kidneys through renal denervation, which involves selectively disabling renal nerves within the SNS to create at least a partial conduction block within the SNS. Thermal neuromodulation is due at least in part to the thermally-induced alterations of the neural structures themselves. Additionally or alternatively, the thermal neuromodulation may be due at least in part to the thermally-induced alteration of vascular structures, e.g. arteries, arterioles, capillaries, and/or veins, which perfuse the neural fibers surrounding the target area. Additionally or alternatively, the thermal neuromodulation may be due at least in part to the electroporation of the target neural fibers.

[0117] FIG. **16** illustrates a portion of a thermal basket catheter **850** in an expanded condition positioned within the human renal anatomy. The human renal anatomy includes kidneys **852** that are supplied with oxygenated blood by right and left renal arteries **854**, which branch off an abdominal aorta **856** at the renal ostia **858** to enter the hilum **858** of the kidney **852**. The abdominal aorta **856** connects the renal arteries **854** to the **860** and an inferior vena cava **862**. Specifically, the thermal basket catheter **850** is shown extending through the abdominal aorta and into the left renal artery **854**. In alternate embodiments, the thermal basket catheter may be sized and configured to travel through the inferior renal vessels **864** as well. The thermal basket catheter **850** is substantially similar to the ablation catheter **110** except for the differences described below. The thermal basket catheter **850** will be described in more detail below with respect to FIGS. **19-28** and **30**. In some instances, the thermal basket catheter **850** includes components or features similar or identical to those disclosed in U.S. patent application Ser. No. 13/458,856, entitled "Methods and Apparatus for Renal Neuromodulation," filed Apr. 27, 2012, which is hereby incorporated by reference in its entirety.

[0118] Left (not shown) and right renal plexi or nerves **870** surround the left and right renal arteries **854**, respectively. Anatomically, the renal nerve **870** forms one or more plexi within the adventitial tissue surrounding the renal artery **854**. For the purpose of this disclosure, the renal nerve is defined as any individual nerve or plexus of nerves and ganglia that conducts a nerve signal to and/or from the kidney **852** and is anatomically located on the surface of the renal artery **854**, parts of the abdominal aorta **856** where the renal artery **854** branches off the aorta **856**, and/or on inferior branches of the renal artery **854**.

[0119] Proper renal function is essential to maintenance of cardiovascular homeostasis so as to avoid hypertensive conditions. Excretion of sodium is key to maintaining appropriate extracellular fluid volume and blood volume, and ultimately controlling the effects of these volumes on arterial pressure. Under steady-state conditions, arterial pressure rises to that pressure level which results in a balance between urinary output and water and sodium intake. If abnormal kidney function causes excessive renal sodium and water retention, as occurs with sympathetic overstimulation of the kidneys through the renal nerves **120**, arterial pressure will increase to a level to maintain sodium output equal to intake. In hypertensive patients, the balance between sodium intake and output is achieved at the expense of an elevated arterial pressure in part as a result of the sympathetic stimulation of the kidneys through the renal nerves **120**. Thermal neuromodulation of the renal nerves **120** may help alleviate the symptoms and sequelae of hypertension by blocking or suppressing the efferent and afferent sympathetic activity of the kidneys **10**.

[0120] FIG. **17** illustrates a segment of the renal artery **854** in greater detail, showing various intraluminal characteristics and intra-to-extraluminal distances that may be present within a single vessel. In particular, the renal artery **854** includes a lumen **872** that extends lengthwise through the renal artery along a longitudinal axis LA. The lumen **872** is a tube-like passage that allows the flow of oxygenated blood from the abdominal aorta to the kidney. The sympathetic renal nerves **870** extend generally within the adventitia (not shown) surrounding the renal artery **854**, and include both the efferent (conducting away from the central nervous system) and afferent (conducting toward the central nervous system) renal nerves.

[0121] The renal artery **854** includes a first portion **874** having a generally healthy luminal diameter D**1** and an intra-to-extraluminal distance D**2**, a second portion **876** having a narrowed and irregular lumen and an enlarged intra-to-extraluminal distance D**3** due to atherosclerotic changes in the form of plaques **880**, **882**, and a third portion **878** having a narrowed lumen and an enlarged intra-to-extraluminal distance D**2'** due to a thickened arterial wall **884**. Thus, the intraluminal contour of a vessel, for example, the renal artery **854**, may be greatly varied along the length of the vessel. Variable intra-to-extraluminal distances along the length of the vessel may affect the treatment protocols for implementing thermal neuromodulation at different portions of the vessel at least because the amount of thermal energy necessary to travel the intra-to-extraluminal distance to affect neural tissue surrounding the vessel varies with varying intra-to-extraluminal distances. As described further below in relation to FIGS. **29** a and **29***b*, the thermal basket catheters disclosed herein may aid in determining appropriate and effective treatment protocols by pre-treatment, in-treatment, and post-treatment imaging and sensing of various characteristics, including the extent or level of ablation.

[0122] FIGS. **18***a*, **18***b*, and **18***c* illustrate the portions **874**, **878**, **876**, respectively, of the renal artery **854** in perspective view, showing the sympathetic renal nerves **870** that line the renal artery **854**. FIG. **18***a* illustrates the portion **874** of the renal artery **854** including the renal nerves **870**, which are shown schematically as a branching network attached to the external surface of the renal artery **854**. The renal nerves **870** extend generally lengthwise along the longitudinal axis LA of renal artery **854**. In the case of hypertension, the sympathetic nerves that run from the spinal cord to the kidneys **852** signal the body to produce norepinephrine, which leads to a cascade of signals ultimately causing a rise in blood pressure. Neuromodulation of the renal nerves **870** (or renal denervation) removes or diminishes this response and facilitates a return to normal blood pressure.

[0123] The renal artery **854** has smooth muscle cells **886** that surround the arterial circumference and spiral around the angular axis **0** of the artery. The smooth muscle cells **886** of the renal artery **854** have a longer dimension extending trans-

verse (i.e., non-parallel) to the longitudinal axis LA of the renal artery **854**. The misalignment of the lengthwise dimensions of the renal nerves **870** and the smooth muscle cells **886** is defined as "cellular misalignment." This cellular misalignment of the renal nerves **870** and the smooth muscle cells **886** may be exploited to selectively affect renal nerve cells with a reduced effect on smooth muscle cells.

[0124] In FIG. **18***a*, the first portion **874** of the renal artery **854** includes a lumen **888** that extends lengthwise through the renal artery along the longitudinal axis LA. The lumen **888** is a generally cylindrical passage that allows the flow of oxygenated blood from the abdominal aorta to the kidney. The lumen **888** includes a luminal wall **884** that forms the blood-contacting surface of the renal artery **854**. The distance D**1** corresponds to the luminal diameter of lumen **888** and defines the diameter or perimeter of the blood flow lumen. A distance D**2**, corresponding to the wall thickness, exists between the luminal wall **884** and the renal nerves **870**. The relatively healthy renal artery **854** may have an almost uniform distance D**2** or wall thickness with respect to the lumen **888**. The relatively healthy renal artery **854** may decrease substantially regularly in cross-sectional area and volume per unit length, from a proximal portion near the aorta to a distal portion near the kidney.

[0125] FIG. **18***b* illustrates the third portion **878** of the renal artery **854** including a lumen **888'** that extends lengthwise through the renal artery along the longitudinal axis LA. The lumen **888'** includes a luminal wall **884'** which forms the blood-contacting surface of the renal artery **854** at the third portion **878**. In some patients, the smooth muscle wall of the renal artery is thicker than in other patients, and consequently, as illustrated in FIG. **18***b*, the lumen of the third portion **878** of the renal artery **854** possesses a smaller diameter relative to the renal arteries of other patients. The lumen **888'**, which is smaller in diameter and cross-sectional area than the lumen **888** pictured in FIG. **18***a*, is a generally cylindrical passage that allows the flow of oxygenated blood from the abdominal aorta to the kidney. A distance D**2'** exists between the luminal wall **884'** and the renal nerves **870** that is greater than the distance D**2** pictured in FIG. **18***a*.

[0126] FIG. **18***c* illustrates the diseased second portion **876** of the renal artery **854** including atherosclerotic changes. The second portion **876** includes a lumen **888"** that extends lengthwise through the renal artery along the longitudinal axis LA. Unlike the renal artery of a patient without atherosclerotic changes, as is pictured in FIGS. **18***a* and **18***b*, the lumen **888"** is an irregularly-shaped passage that may allow the flow of oxygenated blood from the abdominal aorta to the kidney at a reduced rate because the narrowed lumen creates a reduced cross-sectional area for blood flow. The lumen **888"** includes a luminal wall **884"** which forms the blood-contacting surface of the renal artery **854** at the second portion **876**. The luminal wall **884"** is irregularly shaped by the presence of two atherosclerotic plaques **880**, **882**. A distance D**3** exists between the luminal wall **884"** and the renal nerves **870** that is greater than the distance D**2** pictured in FIG. **18***a*.

[0127] In FIG. **18***c*, the atherosclerotic plaque **880** is a predominantly fatty plaque in the earlier stages of plaque formation. The atherosclerotic plaque **882** is a hardened, calcified plaque in the later stages of plaque formation. The distance D**3** extending from the luminal wall **884"** to the renal nerves ranges in thickness along the circumferential and longitudinal span of the plaques **880**, **882**. Different types of plaques may possess different conductive and impedance properties, thereby affecting the amount, type, and duration of thermal energy that may be required to effectively modulate the nerves overlying the vessels in the region of the plaques.

[0128] FIG. **19** illustrates the thermal basket catheter **850** that is configured to deliver a thermal electric field to renal nerve fibers in order to achieve renal neuromodulation via heating and/or cooling (i.e., through ablation) according to one embodiment of the present disclosure. The thermal basket catheter **850** is substantially similar to the ablation catheter **110** except for the differences described below. The thermal basket catheter **850** comprises an elongate, flexible, tubular body **920** that is configured for intravascular placement and defines an internal lumen **925**. The body **920** extends from a handle **930** along a longitudinal axis CA, which is coupled to an interface **940** by an electrical connection **945**. The body **920** includes a proximal portion **950**, and intermediate portion **955**, and a distal portion **960**. In FIG. **19**, the thermal basket catheter **850** is pictured in an unexpanded condition. The proximal portion **950** may include shaft markers **962** to aid in positioning the catheter in the body of a patient. The intermediate portion **955** may include a guidewire exit port **965** from which a guidewire may emerge. The distal portion **960** may include several radiopaque markers **970**, an imaging apparatus **980**, and a distal tip **990**. In addition, the distal portion **960** comprises an expandable structure **1000** (not shown in FIG. **19**) in an unexpanded condition within the body **920**, located within the distal portion **960** and proximal to the distal tip **990**. The imaging apparatus **980** is positioned on a proximal segment of the distal tip **090**, which may be axially spaced from the rest of the body **920** along the longitudinal axis CA to reveal the expandable structure **1000** in a gradually expanding condition.

[0129] The interface **940** is configured to connect the catheter **850** to the ablation system **100** described above in reference to FIG. **1**. More specifically, in some instances the interface **940** is configured to communicatively connect at least the imaging apparatus **980** and the expandable structure **1000** of the catheter **850** to the controller **210** suitable for carrying out imaging and thermal neuromodulation. The interface **940** may also be configured to include a plurality of electrical connections, each electrically coupled to an electrode and/or a sensor on the expandable structure **1000** via a dedicated conductor and/or a sensor cable (not shown), respectively, running through the body **920** as described in more detail below with respect to FIG. **12**. Such a configuration allows for a specific group or subset of electrodes on the expandable structure **1000** to be easily energized with either monopolar or bipolar energy, for example. Such a configuration may also allow the expandable structure **1000** to transmit data from any of a variety of sensors via the controller **210** to data display modules such as the GUI **215** and/or the processor **220**. The interface **940** may be coupled to the ablation source **225** via the controller **210**, with the controller **210** allowing energy to be selectively directed to the portion of a luminal wall of the renal artery that is engaged by the expandable structure **1000** while in an expanded condition.

[0130] In the pictured embodiment, the ablation source **225** is configured to produce thermal energy, e.g. RF energy, that may be directed to the expandable structure **1000** when it assumes an expanded condition. Under the control of the user or an automated control algorithm in the processor **220**, the ablation source **225** generates a selected form and magnitude of thermal energy. The ablation source **225** may be utilized

with any of the thermal basket catheters described herein for delivery of a thermal electric field with the desired field parameters, i.e., parameters sufficient to thermally induce renal neuromodulation via heating, cooling, and/or other mechanisms such as electroporation. It should be understood that the thermal basket catheters described herein may be electrically connected to the ablation source **225** even through the ablation source **225** is not explicitly shown or described with respect to each embodiment. The user may direct whether the expandable structure **1000** is energized with monopolar or bipolar RF energy by using the controller **210** or programming the processor **220**.

[0131] FIG. **19** illustrates the thermal basket catheter **850** in an unexpanded condition according to one embodiment of the present disclosure. The thermal basket catheter includes the expandable structure **1000** in an unexpanded condition positioned within the distal portion **960**. As described above, the body **920** is an elongate flexible tube that defines the lumen **925** and the longitudinal axis of the catheter CA. The body **920** is configured to flex in a substantial fashion to traverse tortuous intravascular pathways and gain entrance to the renal arteries. The lumen **925** may be used for the delivery of thermal energy, for sensing various characteristics, and for imaging the vascular and neural anatomy. The lumen **925** may also be used as an access lumen for a guidewire. In some embodiments, the lumen **925** may be used for irrigation of a vessel lumen and aspiration of cellular debris, such as plaque material. In some embodiments, the body **920** includes more than one lumen.

[0132] As described above, the proximal portion **950** may include shaft markers **962** disposed along the body of the catheter **850** that aid in positioning the catheter in the body of a patient. The shaft markers **962** may be positioned a specific distance from each other and comprise a measurement scale reflecting the distance of the marker **962** from the expandable structure **1000**. The proximal portion **950** may include any number of shaft markers **962** positioned a fixed distance away from the expandable structure **1000** associated with a range of expected distances from the patient's skin surface at the point of catheter entry to the desired zone of thermal neuromodulation. For example, the shaft markers may be positioned, by way of non-limiting example, **1** millimeter from each other, **1** centimeter from each other, and/or **1** inch from each other. After initially positioned the expandable structure within the target vessel for neuromodulation, the user may utilize the shaft markers **962** to knowledgeably shift or reposition the catheter **850** along the intravascular target vessel to apply thermal energy at desired intervals along the target vessel before, after, or without employing imaging guidance. By noting the measurement and/or change in measured distance indicated by the shaft markers located immediately external to the patient's body as the catheter **850** is shifted, the user may determine the approximate distance and axial direction the expandable structure **1000** has shifted within the patient's vasculature. In addition, the user may use the measurement and/or change in measured distance indicated by the shaft markers located immediately external to the patient's body to cross reference the intravascular position of the expandable structure **1000** indicated by intravascular imaging. In some embodiments, the shaft markers **962** may be radiopaque or otherwise visible to imaging guidance. Other embodiments may lack shaft markers.

[0133] As described above, the intermediate portion **955** may include a guidewire exit port **965** from which a guidewire may emerge. The structure and function of the guidewire exit port **965** will be described in further detail below with respect to FIGS. **21-25**.

[0134] The radiopaque markers **970** are spaced along the distal portion **960** at specific intervals from each other and at a specific distance from the distal tip **990**. The radiopaque markers **970** may aid the user in visualizing the path and ultimate positioning of the catheter **850** within the vasculature of the patient. In addition, the radiopaque markers **970** may provide a fixed reference point for co-registration of various imaging modalities and treatments, including by way of non-limiting example, external imaging including angiography and fluoroscopy, imaging by the imaging apparatus **980**, and thermal neuromodulation by the expandable structure **1000**. Other embodiments may lack radiopaque markers.

[0135] The imaging apparatus **980** is substantially similar to the imaging apparatus **180** described above in relation to FIG. **1** except for the differences described below. In the pictured embodiment, the imaging apparatus **980** is an intravascular ultrasound (IVUS) apparatus. More specifically, the imaging apparatus **980** pictured in FIG. **19** represents an ultrasound transducer. The entire IVUS apparatus may extend through the body **920** and include all the components associated with an IVUS module, such as a transducer(s), multiplexer(s), electrical connection(s), etc., for performing IVUS imaging. The imaging apparatus **980** of the pictured embodiment may utilize any IVUS configuration that allows at least a portion of the body **920** to be introduced over a guidewire. For example, in some instances, the imaging apparatus **980** utilizes an array of transducers (e.g., 32, 64, 128, or other number transducers) disposed circumferentially about the central lumen **925** of the body **920** in a fixed orientation. In other embodiments, the IVUS portion **118** is a rotational IVUS system. In some instances, the imaging apparatus **980** includes components similar or identical to those found in IVUS products from Volcano Corporation, such as the Eagle Eye® Gold Catheter, the Visions® PV8.2F Catheter, the Visions® PV 018 Catheter, and/or the Revolution® 45 MHz Catheter, and/or IVUS products available from other manufacturers. Further, in some instances the catheter **850** includes components or features similar or identical to those disclosed in U.S. Pat. Nos. 4,917,097, 5,368,037, 5,453,575, 5,603,327, 5,779,644, 5,857,974, 5,876,344, 5,921,931, 5,938,615, 6,049,958, 6,0854,109, 6,123,673, 6,165,128, 6,283,920, 6,309,339; 6,033,357, 6,457,365, 6,712,767, 6,725,081, 6,767,327, 6,776,763, 6,779,257, 6,7854,157, 6,899,682, 6,962,567, 6,976,965, 7,097,620, 7,226,417, 7,641,4854, 7,676,910, 7,711,413, and 7,736,317, each of which is hereby incorporated by reference in its entirety.

[0136] In alternate embodiments, the imaging apparatus **980** may be or include, by way of non-limiting example, any of grey-scale IVUS, forward-looking IVUS, rotational IVUS, phased array IVUS, solid state IVUS, or optical coherence tomography. It is understood that, in some instances, wires associated with the imaging apparatus **980** extend along the length of the elongated tubular body **920** through the handle **930** and along electrical connection **945** to the interface **940** such that signals from the imaging apparatus **980** can be communicated to the controller **210**. In some instances, the imaging apparatus **980** communicates wirelessly with the controller **210** and/or the processor **220**.

[0137] In alternate embodiments, the imaging apparatus **980** may work in cooperation with or be substituted by an independent imaging catheter that is threaded through the

lumen **925** of the catheter **850**. In such embodiments, the independent imaging catheter may be axially moveable and rotational within the body **920** such that the imaging components of the imaging catheter may be positioned in a multitude of places along the longitudinal axis CA relative to the expandable structure **1000**. For example, a distal tip of the imaging catheter may be positioned proximal, within, or distal to the expandable structure **1000** to gather image data about the surrounding tissue. In an embodiment where the imaging catheter is positioned within the expandable structure, the expandable structure may be constructed of translucent material or material that does not interfere with the data collection of the imaging catheter.

[0138] With reference to FIG. **20***b*, in alternate embodiments, the imaging apparatus **980** may work in cooperation with or be substituted by a central imaging apparatus **1001**, which may be positioned on an exterior surface of an inner body **1005** of the body **920**. The central imaging apparatus **1001** may be configured to function in substantially the same manner as the imaging apparatus **980**.

[0139] The proximal portion **950** of the body **920** connects to the handle **930**, which is sized and configured to be securely held and manipulated by a user outside a patient's body. By manipulating the handle **930** outside the patient's body, the user may advance the body **920** of the catheter **850** through an intravascular path and remotely manipulate or actuate the distal portion **960**. In the pictured embodiment, the handle **930** includes an elongated, slidable body actuator **1010** positioned within an actuator recess **1011**. The body actuator **1010** may be configured as any of a variety of elements, including by way of non-limiting example, a knob, a pin, or a lever, capable of manipulating or actuating the distal portion **960** to reveal the expandable structure **1000**. The operation of the body actuator **1010** will be further described below with respect to FIGS. **20***b* and **21**.

[0140] In alternate embodiments, the handle **930** may include a proximal port configured to receive fluid therethrough, thereby permitting the user to irrigate or flush the lumen **925** and/or the expandable structure **1000**. For example, the proximal port may include a Luer-type connector capable of sealably engaging an irrigation device such as a syringe. Image guidance using the imaging apparatus **980** or external imaging, e.g., radiographic, CT, or another suitable guidance modality, or combinations thereof, can be used to aid the user's manipulation of the catheter **850**. In the pictured embodiment, the body **920** is integrally coupled to the handle **930**. In other embodiments, the body **920** may be detachably coupled to the handle **930**, thereby permitting the body **920** to be replaceable.

[0141] The catheter **850**, or the various components thereof, may be manufactured from a variety of materials, including, by way of non-limiting example, plastics, polytetrafluoroethylene (PTFE), polyether block amide (PEBAX), thermoplastic, polyimide, silicone, elastomer, metals, such as stainless steel, titanium, shape-memory alloys such as Nitinol, and/or other biologically compatible materials. In addition, the catheter **850** may be manufactured in a variety of lengths, diameters, dimensions, and shapes. For example, in some embodiments the elongated body **920** may be manufactured to have length ranging from approximately 115 cm-155 cm. In one particular embodiment, the elongated body **920** may be manufactured to have length of approximately 872 cm. In some embodiments, the elongated body **920** may be manufactured to have a transverse dimension ranging from approximately 1 mm –2.67 mm (3 Fr-8 Fr). In one embodiment, the elongated body **920** may be manufactured to have a transverse dimension of 2 mm (6 Fr), thereby permitting the catheter **850** to be configured for insertion into the renal vasculature of a patient. These examples are provided for illustrative purposes only, and are not intended to be limiting.

[0142] FIG. **20***a* illustrates at least a segment of the distal portion **960** of the thermal basket catheter **850** in an unexpanded condition according to one embodiment of the present disclosure. In some instances, the thermal basket catheter **850** includes components or features similar or identical to those disclosed in U.S. Patent Application Publication No. US**2004/0176699**, which is hereby incorporated by reference in its entirety. In the pictured embodiment, the distal tip **990** is positioned against the remainder of the body along the longitudinal axis CA, and the expandable structure **1000** is compressed within the lumen in an unexpanded condition. The distal portion **960** includes a distal connection part **1015**, which is the proximal-most part of the distal tip **990**, and a proximal connection part **1020**, which abuts the distal connection part **1015** when the catheter **850** is in an unexpanded condition. In the pictured embodiment, the imaging apparatus **980** is positioned distal to the distal connection part **1015**. Additionally or alternatively, the imaging apparatus may be positioned proximal to the proximal connection part **1020**.

[0143] FIG. **20***b* illustrates at least a segment of the distal portion **960** of the thermal basket catheter **850** in an unexpanded condition according to one embodiment of the present disclosure. In the pictured embodiment, the distal tip **990** is moved distally away from the remainder of the body along the longitudinal axis CA to allow the expandable structure **1000** to emerge from the lumen and assume an expanded condition. Specifically, the distal connection part **1015** is separated axially away from the proximal connection part **1020** along the axis CA. The user may transition the catheter **850** from an unexpanded condition to an expanded condition by manipulating the body actuator **1010** within the actuator recess **1011** to cause the distal tip **990** to move distally away from the remainder of the body **920**. In the pictured embodiment, the expandable structure **1000** is shown in a deployed and expanded condition wherein at least one support arm **1025** has expanded outwardly. The expandable structure **1000** includes six flexible support arms **1025**. In other embodiments, the expandable structure may include any number of support arms **1025**. At least one electrode **1030** and at least one sensor **1035** may be positioned on at least one of the support arms **1025**. The at least one electrode **1030** comprises an ablative element. The at least one electrode **1030** and at least one sensor **1035** will be described in further detail below with reference to FIGS. **26** and **27**.

[0144] The support arms **1025** may be manufactured from a variety of biocompatible materials, including, by way of non-limiting example, superelastic or shape memory alloys such as Nitinol, and other metals such as titanium, Elgiloy®, and/or stainless steel. The support arms **1025** could also be made of, by way of non-limiting example, polymers or polymer composites that include thermoplastics, resins, carbon fiber, and like materials. In the illustrated embodiment, the support arms **1025** are secured to a deployment support member **1040**, which may be secured to an interior component of the body **920** in a variety of ways, including by way of non-limiting example, adhesively bonded, laser welded, mechanically coupled, or integrally formed. In alternate embodiments, the support arms **1025** may be secured to an

interior component of the body **920** directly, thereby eliminating the need for a deployment support member **1040**.

[0145] FIG. **21** illustrates the thermal basket catheter **850** in an unexpanded condition prior to deployment of the expandable structure **1000** according to one embodiment of the present disclosure. More specifically, FIG. **21** illustrates a segment of the body **920** in an unexpanded condition, including a segment of the intermediate portion **955** and a segment of the distal portion **960**. The expandable structure **1000** is positioned proximate to the distal portion **960** of the catheter **850**. As mentioned above, the intermediate portion **955** of the body may include the guidewire exit slot **965** thereon. The distal tip **990** of the distal portion **960** may include at least one guidewire port **1045** capable of receiving a guidewire **1050** therein.

[0146] FIG. **22** illustrates a transverse cross-sectional view of the body **920** of the thermal basket catheter **850** as taken along the lines **22-22** of FIG. **21** according to one embodiment of the present disclosure. FIG. **23** illustrates the expandable structure **1000** in a non-deployed and unexpanded condition according to one embodiment of the present disclosure. As shown in FIGS. **22** and **23**, the elongated body **920** may include an outer sleeve **1055** forming a sleeve lumen **1060** and housing an inner body **1065** therein. In one embodiment, the outer sleeve **1055** may be manufactured from a material, such as PEBAX, having a wall thickness of about 0.0127 mm to about 0.0762 mm. In another embodiment, the outer sleeve **1055** has a wall thickness of about 0.0381 mm to about 0.0635 mm. These ranges are provided for illustrative purposes only, and are not intended to be limiting.

[0147] As shown in FIG. **23**, the expandable structure **1000** of the catheter **850** may be positioned within the sleeve lumen **1060** formed by the outer sleeve **1055** prior to deployment. As shown, the expandable structure **1000** may be compressed inwardly by an inner surface of the outer sleeve **1055** and located within the sleeve lumen **1060**. In an alternate embodiment, the elongated body **920** may be manufactured without an outer sleeve. The inner body **1065** defines an internal passage **1070** therein. In the illustrated embodiment, the internal passage **1070** is formed within the inner body **1065**, however, the internal passage may not be present in some embodiments. In another embodiment, the inner body **1065** may define a plurality of internal passages therein. The internal passage **1070** formed in the inner body **1065** may be in communication with the guidewire port **1045** located on the distal tip **990** and may be capable of receiving the guidewire **1050** therein (as shown in FIG. **21**).

[0148] As shown in FIG. **21**, the expandable structure **1000** is positioned proximate to the distal portion **960** of the catheter **850**. Returning to FIG. **23**, the expandable structure is compressed inwardly by an inner surface of the outer sleeve **1055**. The outer sleeve **1055** may be in communication with or attached to the elongated body actuator **1010** positioned within the actuator recess **1011** located on the handle **930** (as illustrated in FIG. **19**). The rearward movement of the elongated body actuator **1010** within the actuator recess **1011** results in the outer sleeve **1055** retracting rear-wardly from the distal tip **990**, thereby permitting the expandable structure **1000** to expand radially and assume an expanded condition.

[0149] In an alternate embodiment, the outer sleeve **1055** may remain stationary while the inner body **1005** may be capable of moving in telescopic relation thereto. For example, the inner body **1005** may communicate with the elongated body actuator **1010** (as illustrated in FIG. **19**). The forward movement of the elongated body actuator **1010** within the actuator recess **1011** results in the inner body **1005** extending distally from the handle **930** (as illustrated in FIG. **20***b*), thereby advancing the expandable structure **1000** beyond the outer sleeve **1055** and permitting the expandable structure **1000** to expand radially (to contact the luminal wall of an artery, for example).

[0150] Both FIGS. **24** and **25** illustrate a distal segment of the thermal basket catheter **850** in an unexpanded condition according to one embodiment of the present disclosure. As shown in FIG. **24**, a guidewire lumen **1075** may be secured to the guidewire port **1045** on the distal tip **990**. A proximal end of the guidewire lumen **1075** communicates with a guidewire exit port **1080** in the inner body **1005**, thereby permitting the guidewire port **1045** to communicate with the guidewire exit slot **965**. The guidewire lumen **1075** may be secured to the guidewire port **1045** using, by way of non-limiting example, adhesives or bonding agents, mechanical couplers, pins, snap-fit devices, and other coupling devices known in the art.

[0151] As a shown in FIG. **25**, the guidewire **1050** may be introduced into the guidewire port **1045** and made to traverse the guidewire lumen **1075** within the inner body **1005**, exiting the catheter **850** through the guidewire exit port **1080** positioned in the guidewire exit slot **965**. The guidewire exit slot **965** may be formed at a variety of distances along the elongated body **920**. In some embodiments the distance between the guidewire port **1045** and the guidewire exit slot **965** ranges from about 10 cm to about 20 cm. For example, in one embodiment the distance between the guidewire port **1045** and the guidewire exit slot **965** ranges from about 10 cm to about 12 cm. These examples are provided for illustrative purposes only, and are not intended to be limiting.

[0152] FIG. **26** illustrates the thermal basket catheter **850** in an expanded condition according to one embodiment of the present disclosure wherein the distal tip **990** has been moved axially away from the remainder of the distal portion **960** and at least one of the support arms **1025** has expanded outwardly. The support arms **1025** may be manufactured in any of a variety of shapes, including by way of non-limiting example, arcuate shapes, bell shapes, smooth shapes, and step-transition shapes. The support arms include a proximal section **1100**, a medial section **1105**, and a distal section **1110**. The proximal section **1100** may be capable of coupling the expandable structure **1000** to the body **920** or the inner body **1005**. The medial section **1105** is configured to be positioned proximate to or in contact with a vessel luminal wall. The distal section **1110** couples each arm **1025** to a support arm retainer **1115** positioned on an exterior of the inner body **1005**.

[0153] The transverse or cross-sectional profile of the support arms **1025** may be manufactured in any of a variety of shapes, including oblong, ovoid, and round. In some embodiments, the cross-sectional profile of the support arm includes rounded or atraumatic edges to minimize damage to an artery or a tubular structure through which the expandable structure **1000** may travel.

[0154] In one embodiment, the proximal sections **1100** of the support arms **1025** may be coupled to the deployment support member **1040** using an adhesive, such as, by way of non-limiting example, Loctite **3311** adhesive or any other biologically compatible adhesive. In an alternate embodiment, the expandable structure **1000** may be manufactured by laser cutting or forming the at least one support arm **1025** from a substrate. For example, any number of support arms

1025 may be laser cut within a Nitinol tube or cylinder, thereby providing a slotted expandable body. The support arms **1025** may be fabricated from a self-expanding material biased such that the medial section **1105** expands into contact with the vessel luminal wall upon expanding the catheter **850**. In some embodiments, the one or more support arms **1025** may be formed in a deployed state as shown in FIG. **26** wherein at least one support arm **1025** is flared outwardly from the longitudinal axis CA of the catheter **850**.

[0155] In the illustrated embodiment, the guidewire lumen **1075**, capable of receiving the guidewire **1050** therein, longitudinally traverses the expandable structure **1000**. The guidewire lumen **1075** is in communication with the guidewire port **1045** on the distal portion **960** and guidewire exit slot **965** located on the elongated body **920**. In an alternate embodiment, the guidewire lumen **1075** may be in communication with the guidewire port **1045** on the distal tip **990** and/or a proximal port located on the handle **930** (shown in FIG. **19**). In the illustrated embodiment, a retainer sleeve **1120** is positioned over a distal section of the support arms **1025** to provide a transition between the distal tip **990** and the support arms **1025**. As shown, the retainer sleeve **1120** is positioned over the support arm retainers **1115**, thereby preventing the support arm retainers **540** from contacting the vessel wall and causing trauma to the vessel luminal wall, damaging the support arm retainers **1115**, or both. Other embodiments may lack a retainer sleeve.

[0156] During manufacture, the at least one support arm **1025** is formed to assume a deployed position in a relaxed state as shown in FIG. **26**, wherein the medial section **1105** of the support arm **1025** is flared outwardly a distance D from the longitudinal axis CA of the catheter **850**. The application of force to the apex of the medial section **1105** of the support arm **1025** decreases the curvature of the support arm **1025** resulting in a corresponding decrease in the distance D.

[0157] The at least one electrode **1030** may be positioned on the medial section **1105** of at least one of the support arms **1025**, thereby enabling the electrode **1030** to contact or approximate the vessel luminal wall. At least one electrode cable **1125** connects each electrode **1030** to the interface **940** and/or the ablation source **225**.

[0158] The at least one sensor **1035** may be positioned on the medial section **1105** of at least one of the support arms **1025**, thereby enabling the sensor to contact or approximate the vessel luminal wall. At least one sensor cable connects each sensor **1035** to the sensor coupler and/or the interface **940**.

[0159] The expandable structure **1000** may include at least one ancillary sensor **1140** thereon. As shown in FIG. **26**, the ancillary sensor **1140***a* may be positioned on an exterior surface of the inner body **1005**. In the alternative, at least one ancillary sensor **1140***b* may be positioned on at least one support arm **1025**. Exemplary ancillary sensors **1140** include, without limitation, ultrasonic sensors, flow sensors, thermal sensors, blood temperature sensors, electrical contact sensors, conductivity sensors, electromagnetic detectors, pressure sensors, chemical or hormonal sensors, pH sensors, and infrared sensors. For example, in one embodiment the ancillary sensor **1140***a* may comprise a blood sensor positioned on the guidewire lumen **1075** in the bloodstream as shown in FIG. **26**, thereby permitting the sensors **1035** located on the support arms **1025** to measure the vessel wall temperature while simultaneously the ancillary sensor **1140***a* measures blood temperature within the vessel. In another embodiment, the ancillary sensor **1140***b* may comprise a pressure sensor positioned on the support arm **1025** proximate to the electrode **1030** and/or encircling the electrode **1030**. The ancillary pressure sensor **1140***b* may detect the pressure with which the proximate electrode **1030** is contacting the vessel wall, thereby allowing the user to determine whether the electrode **1030** is effectively contacting the vessel wall to ensure adequate energy transfer and ablation (or neuromodulation).

[0160] In the embodiment illustrated in FIG. **26**, each support arm **1025** is coupled by its distal section **1110** to inner body **1005** using the support arm retainer **1115**, thereby permitting each support arm **1025** to move independently relative to the inner body **1005** and the other support arms **1025**. The ability of the support arms **1025** to independently move within the support arm retainer **1115** results in the creation of an expandable structure **1000** offering flexibility, while permitting the support arms **1025** to remain in contact with a vessel wall (not shown) when traversing a tortuous or curved pathway, such as may be found in the renal arteries. More particularly, when the expandable structure **1000** is in a non-deployed state, the ability of the support arms **1025** to move independently of each other in an axial direction reduces shear resistance and results in a more flexible catheter than a catheter wherein the axial movement is coupled or otherwise restricted. In addition, when the expandable structure **1000** is in a deployed and expanded state, the ability of the support arms **1025** to move independently facilitates contact of each of the support arms **1025** with the vessel wall without applying excessive force thereto, thereby decreasing or eliminating the likelihood of injury to the vessel. Maximizing contact of each of the support arms **1025** with the vessel wall in turn maximizes contact of sensors **1035** with the vessel wall, which can be important in some embodiments for obtaining accurate sensor readings.

[0161] Referring again to FIG. **26**, the ability of support arms **1025** to move independently with respect to the inner body **1005** and the other support arms **1025** results in the formation of a flexible expandable structure **1000** capable of traversing tortuous vessel pathways. The support arms **1025** of the expandable structure **1000** may be manufactured in a variety of shapes, lengths, widths, and thickness to promote the flexibility of the individual support arms **1025**. A high degree of flexibility of the support arms helps to ensure the atraumatic deployment and movement of the expandable structure **1000** within a vessel lumen or tubular structure. For example, in one embodiment the support arms **1025** may have a length of about 5 mm to about 26 mm, and more specifically, a length of about 10 mm to about 16 mm. Similarly, the support arms **1025** may be manufactured from a material having a thickness of about 0.0381 mm to about 0.1778 mm. More specifically, in one embodiment, the support arms **1025** have a thickness of about 0.0635 mm to about 0.1878 mm. These ranges are provided for illustrative purposes only, and are not intended to be limiting.

[0162] FIG. **27** illustrates the expandable structure **1000** removed from the catheter **850** and in an expanded condition according to one embodiment of the present disclosure. The expandable structure **1000** may be generally hollow in design and may define an expandable body passage **1150** capable of receiving the guidewire **32** or the inner body **1005** therethrough (see FIG. **12**). In some embodiments, the expandable structure **1000** may be sized and configured for expansion, manipulation, and use within a renal artery. The expandable structure **1000** may include any number of support arms **1025**

separated by one or more spaces **1060**. The arms **1025** may be structurally supported with an insulated material such as, by way of non-limiting example, an ultraviolet cure or heat shrink sleeve, polyethelene, Nylon™, or the like. In the illustrated embodiment, the support arms **1025** are symmetrically positioned around the expandable body passage **1150**. In an alternate embodiment, the support arms **1025** are asymmetrically positioned around the expandable body passage **1150**. As stated above, the expandable structure **1000** may be manufactured from a variety of materials, including, for example, shape memory alloys such as Nitinol, metals such as stainless steel and titanium, polymers, composite materials, and like materials. In one embodiment, the expandable structure **1000** may be formed from a Nitinol hypodermic tube having at least one space **1160** formed therein, thereby defining at least one support arm **1025** thereon.

[0163] Each of the support arms **1025** includes at least one electrode **1030** and at least one corresponding electrode cable **1125** thereon. The electrodes **1030** may comprise individual electrodes (i.e., independent contacts), a segmented electrode with commonly connected contacts, or a single continuous electrode. The electrode cable **1125** extends proximally from the electrode **1030**. The electrode **1030** may comprise a raised component or a flat component on the support arm **1025**. The electrode **1030** and/or the electrode cable **1125** may be coupled to the support arm **1025** using any of a variety of known connection methods, including by way of non-limiting example, welding, adhesive, and/or mechanical fasteners. For example, in one embodiment, the electrode **1030** may be adhesively bonded to the support arm **1025** using Loctite **3311** or any other biologically compatible adhesive. In some embodiments, the electrode **1030** may be integrally formed with the support arm **1025**. Furthermore, all of a portion of the electrode may be coated or plated with gold, or a material having like properties, such as, by way of non-limiting example, silver or an alloy of copper, to improve radiopacity and/or conductivity without adversely diminishing the flexibility of the expandable structure **1000**.

[0164] At least one electrode **1030** is positioned on the medial section **1105** of the support arm **1025**, thereby permitting the electrode **1030** to be positioned proximate to or in contact with a vessel luminal wall when the expandable structure is deployed and in an expanded condition. Any remaining electrodes **1030** may be located at any position along the length of the support arm **1025**. The expandable structure **1000** may include support arms **1025** including any variation or pattern of electrode distribution among the individual support arms. Depending upon the desired application of the thermal basket catheter **850**, the expandable structure **1000** may have an identically configured pattern of electrodes **1030** on the support arms **1025**, or a varying pattern of electrodes **1030** on the support arms **1025**. For example, in the pictured embodiment, the electrodes **1030***a*, **1030***b*, and **1030***c* are positioned on the medial section **1105**, while the electrode **1030***d* is positioned on the distal section **1110** of the support arm **1025**.

[0165] Each electrode **1030** is electrically coupled to the ablation source **225**, which is disposed external to the patient, for the delivery of a thermal electric field for the heating of target neural fibers. In the pictured embodiment, each electrode **1030** is connected to the corresponding electrode cable **1125**, which traverses the length of the support arm **1025** from the electrode **1030** to the interface **940** and/or the thermal electric field generator **325**. In some embodiments, the electrode cable **1125** may be selectively insulated such that only a selective portion of the electrode cable, e.g., a distal tip of the cable, may be electrically active. In alternate embodiments, several electrodes may be coupled to the field generator using one or more shared electrode cables. In other embodiments, the electrodes may communicate with the ablation source **225** via wireless means.

[0166] Each of the support arms **1025** includes at least one sensor **1035** and at least one corresponding sensor cable **1170** thereon. The sensor **1035** may comprise a raised component or a flat component on the support arm **1025**. The sensor cable **1170** extends proximally from the sensor **1035**. The sensor **1035** and/or the sensor cable **1170** may be coupled to the support arm **1025** using any of a variety of known connection methods, including by way of non-limiting example, welding, adhesive, and/or mechanical fasteners. For example, in one embodiment, the sensor **1035** may be adhesively bonded to the support arm **1025** using Loctite **3311** or any other biologically compatible adhesive. In some embodiments, the sensor **1035** may be integrally formed with the support arm **1025**. For example, in some embodiments, at least one sensor **1035** may be comprised of flexible circuits integrated into at least one support arm **1025**. The flexible circuit may be comprised of polymer thick film flex circuit that incorporates a specially formulated conductive or resistive ink that is screen printed onto the flexible substrate to create the thermal sensor circuit patterns. This substrate is then adhered to the surface of each of the support arms **1025**. In an alternate embodiment, the substrate can be adhered to independently expandable, resilient body arms which are not part of an expandable structure **1000**. The independent sensor body can be provided with the appropriate number of body arms, such as four, five, six, or more.

[0167] At least one sensor cable connects each sensor **1035** to the sensor coupler and/or the interface **940**. In alternate embodiments, several sensors may be coupled to the sensor coupler and/or the interface **940** using one or more shared sensor cables, as illustrated by sensors **1035***c* and **1035**f. In other embodiments, the sensors **1035** may communicate with the sensor coupler, interface **940**, and/or processor **220** via wireless means. The at least one sensor cable **1170** may traverse the elongated body **920** through the sleeve lumen **1060**, the internal passage **1070** (as illustrated in FIG. **22**), or both. In some embodiments, a single cable may convey thermal energy to the electrode **1030** and convey data from the sensor **1035**.

[0168] Exemplary sensors **1035** include, without limitation, ultrasonic sensors, flow sensors, thermal sensors, such as thermocouples, thermistors and infrared sensors, pressure sensors, electrical contact sensors, conductivity and/or impedance sensors, electromagnetic detectors, fluid flow sensors, electrical current sensors, tension sensors, chemical or hormonal sensors (capable of detecting the concentration or presence/absence of various gases, ions, enzymes, proteins, metabolic products, etc.), and pH sensors. For example, the sensor **1035** may comprise a thermocouple or other type of temperature sensor for monitoring the temperature of the target tissue, the non-target tissue, the surrounding blood, the electrodes **1030**, or any other part of the expandable structure **1000**. In one embodiment, the thermocouple may be capable of detecting thermal discontinuities or variations in vessel wall temperature, thereby providing a thermal basket catheter capable of locating inflamed or vulnerable plaques on the luminal wall of a blood vessel in vivo. The expandable struc-

ture **1000** may contain any of a variety of sensor types within a single embodiment. As a result, the catheter **850** may be capable of simultaneously examining a number of different characteristics of the target tissue, the surrounding environment, and/or the catheter **850** itself within the body of a patient, including, for example, vessel wall temperature, blood temperature, electrode temperature, fluorescence, luminescence, flow rate, and flow pressure.

[0169] The at least one sensor **1035** may be located at any position along the length of the support arm **1025**. In some embodiments, the at least one sensor **1035** may be located proximate to the electrode **1030** on the support arm **1025**, as illustrated by sensors **1035***a* and **1035***c*. In the same or alternate embodiments, at least one sensor **1035** may be positioned within or surrounding the electrode **1030**, as illustrated by sensor **1035***b*. As shown in FIG. **27** by sensors **1035***a* and **1035***c*, the sensor **1035** may be positioned on or near the apex of the curved support arms **1025** when the expandable structure **1000** is deployed in an expanded state, thereby permitting the sensors to contact a vessel luminal wall. In some embodiments, the sensor **1035***a*, **1035***b*, and/or **1035***c* may comprise a pressure sensor(s) that may detect the pressure with which the proximate electrode **1030** is contacting the vessel wall, thereby allowing the user to determine whether the electrode **1030** is effectively contacting the vessel wall to ensure adequate energy transfer and neuromodulation/ablation. In some embodiments, as illustrated by sensors **1035***d* and **1035**f, the at least one sensor **1035** may be positioned on the support arms **1025** at any radial distance less than the radial distance of the apex of the curved support arms **1025** relative the longitudinal axis CA when the expandable structure **1000** is in a deployed state, thereby preventing the at least one sensor from contacting a vessel luminal wall when the expandable structure **1000** is deployed to an expanded state.

[0170] Depending upon the desired application of the thermal basket catheter **850**, the expandable structure **1000** may have an identically configured pattern of electrodes **1030** and sensors **1035** on the support arms **1025**, or a varying pattern of electrodes **1030** and sensors **1035** on the support arms **1025**. For example, in the pictured embodiment, the sensors **1035***a*, **1035***b*, and **1035***c* are positioned on the medial section **1105**, while the sensor **1035***d* is positioned on the proximal section **1100** of the support arm **1025**.

[0171] In some embodiments, radiopaque markers **600** may be positioned along the length of the support arms **1025**, aiding in the placement and visualization of the thermal basket catheter **850**. In some embodiments, as shown in FIG. **28**, individual support arms **1025** may carry a distinctive pattern or shape of radiopaque markers **1180** to enable the user to distinguish individual support arms in the image data gathered from the imaging apparatus **980** and/or external imaging. For example, the support arm **1025***a* carries two distinctively shaped radiopaque markers **1180***a* while the support arm **1025***b* carries a distinctively shaped radiopaque marker **1180***b*. In other embodiments, alternatively or additionally, the electrodes **1030** and/or the sensors **1035** are radiopaque or coupled to radiopaque markers (not shown).

[0172] The electrodes **1030** may be configured to provide differential or selective heating of the vessel luminal wall, wherein individual electrodes may be selectively activated to convey thermal energy to the vessel luminal wall while other electrodes on the same or different support arm **1025** are not activated and do not provide thermal energy. In addition, individual electrodes **1030** may be configured to convey different amounts of thermal energy to different parts of the vessel luminal wall. Furthermore, the electrodes **1030** may be configured to provide a bipolar signal, or the electrodes may be used together or individually in conjunction with the separate patient ground pad or electrode **350**. As illustrated in FIG. **27**, the electrodes **1030** are distributed circumferentially about the axis CA in an array, with adjacent electrodes being slightly axially offset, preferably being staggered or alternating between more proximal and more distal positions on the medial section **1105**. This arrangement allows bipolar energy to be directed between adjacent circumferential electrodes, between adjacent "distal" electrodes, between adjacent "proximal" electrodes, and the like.

[0173] FIGS. **29***a* and **29***b* provide a schematic flowchart illustrating methods of delivering and controlling the thermal neuromodulation to renal vessels. With reference to FIGS. **16**, **29***a*, and **30**, step **1210** comprises the user initiating a thermal neuromodulation procedure by positioning the thermal basket catheter **850** within the renal artery **854**. Prior to insertion of the catheter **850**, the guidewire **1050** (as illustrated in FIG. **21**) may be introduced into the arterial vasculature of a patient using standard percutaneous techniques. Once the guidewire **1050** is positioned within the target blood vessel, which is the left renal artery **854** in the illustrated embodiment, the catheter **850** may be introduced into the arterial vasculature of a patient over the guidewire **1050** and advanced to the area of interest. In the alternative, the catheter **850** may be coupled to the guidewire **1050** external to the patient and both the guidewire **1050** and the catheter **850** may be introduced into the patient and advanced to an area of interest simultaneously. The catheter **850** may include IVUS or other imaging apparatuses **980** (as shown in FIG. **30**) thereon, thereby permitting the user to precisely position the catheter **850** within the blood vessel by using in vivo, real-time intravascular imaging. Additionally or alternatively, the user may utilize external imaging, such as, by way of non-limiting example, fluoroscopy, ultrasound, CT, or MRI, to aid in the guidance and positioning of the catheter **850** within the patient's vasculature. The external and intravascular images may be co-registered to each other for side-by-side or composite display of the images.

[0174] The catheter **850** is positioned within the renal anatomy such that the expandable structure **1000**, which is disposed in an unexpanded condition within the outer sleeve **1055** (as shown in FIG. **23**) when introduced the patient's vasculature, is positioned proximal to the target area of interest, including, by way of non-limiting example, renal artery **854**, the inferior renal vessels **864**, and/or the abdominal aorta **856**. Prior to expanding the expandable structure **1000**, at step **1212**, the user may utilize the imaging apparatus **980** and/or the central imaging apparatus **1001** to obtain intravascular images of the target area and area immediately surrounding the target area. The imaging apparatus **980** and/or the central imaging apparatus **1001** may obtain images of the vessel wall concentrically about the catheter **850** so as to measure the thickness of the vessel wall in the target area of interest. In some cases, the imaging data may allow identification and/or tissue characterization of the atherosclerotic changes, plaques, tissues, lesions, and the like from within the blood vessel.

[0175] At step **1213**, the imaging data is transferred to the characterization application **250**, which then characterizes the tissue composition and ablation level of the imaged tissue. The imaging and/or characterization data may lead to a deter-

mination of the optimal intravascular location for the application of thermal neuromodulation.

[0176] At step **1214** of FIG. **29***a*, the processor **220** and/or the user may analyze the intravascular images obtained by the imaging apparatus **980** and/or the central imaging apparatus **1001** and the tissue characterization data from the characterization application **250** to determine whether the renal artery **854** possesses atherosclerotic changes or other disease processes of the vessel wall in the target area of interest. In some instances, the processor **220** and/or the user may analyze both the intravascular images and the tissue characterization to determine various tissue features. As illustrated in FIG. **18***c*, distance D**3** exists between the luminal wall **884"** and the renal nerves **870** in the area of an atherosclerotic plaque that is greater than the distance D**2** that exists between a healthy vessel wall **884** and the renal nerves **870** pictured in FIG. **18***a*.

[0177] At step **1216**, if the user and/or the processor **220** determines that the vessel area immediately surrounding the expandable structure **1000** is not the optimal site for thermal neuromodulation within the vessel based on the positional imaging data based on the imaged intraluminal vessel contours, wall thicknesses, and plaque types (as shown in FIG. **17**), the user and/or the processor **220** may return to step **1210** and reposition the catheter **850** into a portion of the artery **854** containing less plaque or having a thinner wall.

[0178] For example, if the intravascular imaging suggests the presence of eccentric atherosclerotic plaques or thickening along the length of the renal artery **854**, as shown by portion **876** in FIGS. **17** and **18***c*, the processor **220** and/or the user may reposition the catheter **850** in an optimal area having the thinnest intra-to-extravascular distance across the vessel wall (as shown by portion **874** in FIGS. **17** and **18***a*). For example, as described above in reference to FIGS. **6** and **12-14**, the intravascular imaging and/or the tissue characterization may reveal the presence of calcified changes in the vessel wall, which can hinder the transfer of energy through the vessel wall to the target nerves. Ultimately, the user and/or the processor **220** may direct more thermal energy to the electrodes **1030** positioned adjacent the thicker and/or more calcified portions of the plaque than those positioned against thinner portions of the plaque or the healthier portions of the vessel wall, thereby enabling the appropriate amount of thermal energy to reach the target renal nerves.

[0179] Once the user and/or the processor **220** have determined at step **1218** that the catheter **850** is positioned in the optimal location for neuromodulation within the vessel, at step **1220**, the processor **220** and/or the user may record or store (e.g., in the memory **245**) the imaging and/or tissue characterization data associated with the particular intravascular position of the catheter **850** within the renal artery **854** or the abdominal aorta **90** relative to the renal ostia **92**. At step **1222**, the user may use this positional data about the intraluminal characteristics of the optimal vessel site, including, by way of non-limiting example, the intra-extravascular or intra-extraluminal distance, the wall thickness, and/or the type of atherosclerotic plaque, to plan the current treatment procedure and/or repeat treatment procedures for the same intravascular site. Throughout the neuromodulation procedure, the user and/or the processor **220** may store imaged, characterized, and/or sensed data (e.g., in the memory **245**).

[0180] At step **1224** of FIG. **29***a*, after assessing the intravascular target area of interest and positioning the catheter **850** in the optimal location, the user operates the elongated body actuator **1010** positioned within the actuator recess **1011** on the handle **930** to expand the catheter **850** and deploy the expandable structure **1000**. The rearward operation of the elongated body actuator **1010** may result in the outer sleeve **1055** retracting rearwardly, thereby exposing the expandable structure **1000** and permitting the expandable structure **1000** to assume a relaxed, expanded state wherein the one or more support arms **1025** flare outwardly, as shown in FIG. **26**. The positioning of the expandable structure **1000**, the support arms **1025**, the electrodes **1030**, and the sensors **1035** may be facilitated by the imaging apparatus **980** and/or the central imaging apparatus **355**, and/or external imaging utilizing the radiopaque markers **970**.

[0181] FIG. **30** shows the expandable structure **1000** positioned and deployed in an expanded condition within a curved atherosclerotic portion **1300** of the renal artery **854** (similar to the portion **876** shown in FIG. **17**) according to one embodiment of the present disclosure. The support arms **1025** have expanded outwardly from the longitudinal axis CA, thereby permitting the electrodes **1030** and sensors **1035** located on the support arms **1025** to contact the internal luminal surface **1310** of the vessel **1300**. The luminal surfaces **1310***a*, **1310***b* correspond to raised, irregular inner surfaces of the vessel **1300** that have been deformed by a circumferential atherosclerotic plaque **1320**. The luminal surface **1310***a* covers the thinnest portion of the plaque **1320**, unlike the luminal surface **1310***b*, which covers a thicker portion of the plaque **1320**. As shown, the expandable structure **1000** has been positioned adjacent to the luminal surface **1310***a*, which is an optimal intravascular position for thermal neuromodulation because of a relatively small intra-to-extravascular distance D**6**.

[0182] An apex of the medial section **1105***a* of first support arm **1025***a* is extended a first distance D**4** from the guidewire lumen **1075** while permitting an electrode **1030***a* and a sensor **1035***a* positioned thereon to remain in contact with the vessel wall **1310***a*. A first distal tip **1330***a* of the support arm **1025***a* is positioned adjacent to or proximate to the first support arm retainer **1115***a* within the retainer sleeve **1120**. A second support arm **1025***b* has an apex that is positioned a second distance D**5** from the guidewire lumen **1075** while permitting an electrode **1030***a* and a sensor **1035***b* positioned thereon to remain in contact with the vessel wall **1310***b*, wherein the second distance D**5** is smaller than the first distance D**4**. The second distal tip **1330***b* of the second support arm **1025***b* is positioned distally from the retainer **1115***b* within the retainer sleeve **1120**. As a result, the electrodes **1030***a*, **1030***b* and the sensors **1035***a*, **1035***b* positioned on each of the support arms **1025***a*, **1025***b* remain in contact with the vessel wall **1310** despite the disparity between distances D**4** and D**5**.

[0183] Thus, as a result of the expandable structure **1000** expanding radially outwards, the at least one electrode **1030** located on the at least one support arm **1025** radially engages the luminal wall **1310**. Wall-contacting electrodes facilitate more efficient transfer of thermal energy across the vessel wall **1310** to the target nerve fibers **870** than electrodes positioned away from the wall **1310**.

[0184] With reference to FIG. **29***a*, at step **1226**, to aid in registering the electrodes **1030** (i.e., the ablative elements) with the circumferential luminal wall **1310** of the vessel **1300**, the user and/or the processor **220** may perform intravascular imaging or external imaging of the distinctively shaped radiopaque markers, such as **1180***b*, of various support arms **1025**. In some instances, at step **1227**, the user and/or the processor

220 may again use the tissue characterization application **250** to characterize the tissue composition and ablation level of the target tissues.

[0185] At step **1228**, the user and/or the processor **220** may utilize such imaging and/or characterization data to determine the circumferential placement of particular electrodes **1030** and to refine the treatment plan. For example, in some embodiments, the IVUS image may be brighter from an ablated region or a region with a more fibrous/necrotic core. Utilizing the real-time intravascular image data provided by the imaging apparatus **980** and/or the central imaging apparatus **355**, as well as the real-time tissue characterization data, the user and/or the processor **220** may plan to apply uniform heating of all the electrodes **1030** or differential heating by selectively activating or energizing an individual electrode **1030** or a selective subset of electrodes **1030** with varying amounts of thermal energy, e.g., RF energy, to apply the optimal amount and type of thermal energy to the renal nerves **870** surrounding the vessel **1300** to properly ablate and/or denervate the target area. The tissue characterization data allows the user and/or processor **220** to determine the appropriate level of ablative energy necessary to ablate the various tissue components of the target object. The user and/or processor **220** may utilize the tissue characterization data to tune the thermal basket catheter **850** (i.e., the ablation catheter) to apply only the appropriate amount or intensity of ablative energy through the electrode(s) **1030** (i.e., the ablative element(s) **170**). Throughout the thermal neuromodulation procedure, updated tissue characterization data about ablation level may be utilized as a reference against which changes in ablation level may be compared upon application of thermal energy to the target site.

[0186] In some embodiments, at step **1230**, before initializing the application of ablative energy, the user and/or the processor **220** may utilize the electrodes **1030**, the sensors **1035**, and/or any auxiliary sensors to sense baseline measurements of various cardiovascular and neurological characteristics of the vessel, including by way of non-limiting example, vessel wall temperature, vessel lumen temperature, the temperature of surrounding non-target tissue, vessel wall impedance and/or conductivity at the target site (i.e., at points of electrode contact with the vessel wall). For example, by emitting a low voltage pulse from the electrodes **1030** through the vessel wall and measuring the electrical response, a baseline impedance for the vessel wall at a particular position may be established.

[0187] At step **1232** of FIG. **29***a*, the user and/or the processor **220** may utilize such baseline data to refine the treatment plan. For example, utilizing this baseline data, the user and/or the processor **220** may plan to apply uniform heating of all the electrodes **1030** or differential heating by selectively activating or energizing an individual electrode **1030** or a selective subset of electrodes **1030** with varying amounts of thermal energy to apply the optimal amount and type of thermal energy to the renal nerves **870** surrounding the vessel **1300** to properly denervate the target area. Throughout the thermal neuromodulation procedure, the baseline measurements may be utilized as a reference against which changes in impedance or conductivity may be compared upon application of thermal energy to the target vessel site.

[0188] At step **1234** of FIG. **29***b*, the user and/or the processor **220** may initiate the actual thermal neuromodulation (i.e., ablative) process by applying thermal (i.e., RF) energy to the renal nerves **870** through the electrodes **1030**. Initially, in the pictured embodiment, the ablation source **225** generates a thermal electric field, which is selectively transferred to an individual electrode **1030** or a selective subset of electrodes **1030** on the expandable structure **1000**. A bipolar electric field may be generated between electrodes **1030** positioned on the expandable structure **1000**, or a monopolar electric field may be delivered between the electrode **1030** and the neutral electrode or ground pad. This thermal energy is transferred from the activated electrodes **1030** to the nerves **870** across the vessel wall **1310**. The electric field thermally modulates the electrical activity along the nerve fibers **870** that control the sympathetic activity of the kidney through the application of heat. This thermal neuromodulation may ablate the nerves **870** or produce non-ablative injury in the nerves **870**.

[0189] Desired neuromodulative effects may include raising the temperature of target nerves **870** over a certain threshold to achieve non-ablative neuromodulation, and raising the temperature of target nerves **870** over an even higher threshold to achieve non-ablative neuromodulation. For example, in some instances, desired neuromodulative effects may occur as a result of raising the temperature of the target nerves to a temperature ranging from about 42 to about 48 degrees Celsius. In most instances, the temperature of the target nerves should not be raised above 62 degrees Celsius to avoid breakdown of the surrounding tissue. These temperature ranges and thresholds are provided for illustrative purposes only, and are not intended to be limiting.

[0190] Additionally or alternatively, desired neuromodulative effects may include lowering the temperature of target nerves **870** under a certain threshold to achieve non-ablative neuromodulation, and lowering the temperature of target nerves **870** over an even lower threshold to achieve non-ablative neuromodulation. The electric field may also induce electroporation in the nerve fibers **870**.

[0191] The non-target tissues surrounding the expandable structure **1000** may be protected by focusing the delivery of thermal energy on the target neural fibers **870** such that the intensity of thermal energy affecting the non-target tissues is insufficient to induce serious damage to the non-target tissues. Nevertheless, the surrounding non-target tissues of the vessel wall **1310** may also become heated and experience an increase in temperature during delivery of the thermal energy which may damage certain non-target tissues. During the neuromodulation process, the blood flowing through the spaces **1160** and passage **1150** of the expandable structure may act as a heat sink enabling the conductive and/or convective transfer of heat from the non-target tissue to the blood, thereby protecting the non-target tissue. With blood flowing through the vessel and across the electrodes, more thermal energy may be carried away from the non-target tissues, thereby enabling the use of longer and higher energy neuromodulation treatments. Therefore, the open, basket-like configuration of the expandable structure **1000** enables the application of higher energy and longer thermal neuromodulation treatments than would a device that blocked or impeded blood flow.

[0192] The user and/or the processor **220** directs the application of thermal energy to target nerves at a specific location for a desired amount of time. In some instances, the desired amount of time may be predetermined by the baseline calculations and/or the patient's underlying vascular pathology, depending upon the condition of the patient's vascular tissue and surrounding tissues. In other instances, the duration of the

application of thermal energy to a specific target may vary depending upon imaging results and tissue characterizations obtained during the procedure. In some instances, a desired neuromodulative effect is attained after application of thermal energy to a target location for about 30 seconds to about 2 minutes. This exemplary duration is provided for illustrative purposes only and is not intended to be limiting.

[0193] After applying thermal energy at one target location in the vessel, the user and/or processor may reposition the expandable structure **1000** within the lumen and apply thermal energy at another location along the vessel. In some instances, the user and/or processor may reposition the expandable structure **1000** by rotating the catheter **850** and/or the expandable structure **1000**. In some instances, the user and/or processor may reposition the expandable structure **1000** by moving the catheter **850** and/or the expandable structure **1000** linearly (i.e., proximally or distally) through the lumen of the vessel. The linear distance between two adjacent areas of application may be predetermined by the baseline calculations, the initial tissue characterizations, and/or the patient's underlying vascular pathology, depending upon the condition of the patient's vascular tissue and surrounding tissues. In other instances, the linear distance between two adjacent areas of application may vary depending upon imaging results and real-time tissue characterizations obtained during the procedure. For example, in some instances, the linear distance between two adjacent areas of application may range from about 1 to 3 mm. In one instance, the linear distance between two adjacent areas of application may be 2 mm. These distances are provided for illustrative purposes only, and are not intended to be limiting.

[0194] In some embodiments, the user and/or the processor **220** may direct the application of thermal energy to the plaque to ablate or remodel the plaque and/or reduce the plaque thickness prior to the thermal neuromodulation procedure. Such treatment may be tailored to short term and/or long term increases in lumen diameter and blood flow through the vessel of interest. In some embodiments, remodeling of the atherosclerotic plaque may comprise the use of higher energies to ablate and remove occlusive material from within vessel lumens, and particularly to remove atherosclerotic material from the blood vessel in order to improve blood flow. As described above in relation to FIGS. **6**, **12-14**, and **29***a*, the user and/or processor **220** may use real-time tissue characterization data to determine the appropriate level of ablative energy to apply to particular tissue components and adjust the amount of ablative energy applied through the electrode(s) **1030** accordingly.

[0195] At step **1236**, as shown in FIGS. **29***b* and **30**, as a result of the expandable structure **1000** expanding radially outwards, the at least one sensor **1035** located on the at least one support arm **1025** radially contacts the luminal wall **710**, thereby enabling the measurement of the vessel wall temperature. Simultaneously, if provided, the ancillary sensor **1040** located proximate to the expandable structure **1000** on an exterior surface of the guidewire lumen **1075** may measure a characteristic of the environment surrounding the target area, e.g., the blood temperature within the blood vessel, without contacting the vessel wall **1310**. Both the sensor **1035** and the ancillary sensor **1040** may send the collected data to the sensor coupler and/or the interface **940** via at least one sensor cable **1170**, after which the data is transmitted to the controller **210** and the processor **220**.

[0196] In some embodiments, the imaging apparatus **980** and/or central imaging apparatus **1001** continue to obtain intravascular image data and tissue characterization data during the application of thermal energy to the vessel wall **1310** to monitor and/or guide the progress of the renal neuromodulation. In some embodiments, the image and tissue characterization data provides evidence of damage to the vessel wall **1310**, neural injury, and/or levels of neural ablation. At step **1238**, the user and/or processor **220** may direct the imaging apparatus **980** and/or central imaging apparatus **355** obtain intravascular image data of the vessel wall adjacent the target nerves during and/or after the application of thermal energy to the vessel wall **1310**. At step **1240**, the characterization application **250** can analyze the intravascular image data of the vessel wall adjacent the target nerves during and/or after the application of thermal energy to the vessel wall **1310** to characterize different tissue components and the level of ablation achieved.

[0197] At step **1242**, the user and/or the processor **220** may utilize such data (including, for example, the sensing, imaging, and/or tissue characterization data) to determine whether the desired level of thermal injury has been achieved. At step **1244**, if the imaging data leads to an assessment that the desired level of thermal injury and/or neuromodulation has been achieved, the user and/or the processor **220** may stop the application of thermal energy at step **1246**. If, at step **1248**, user and/or the processor **220** use the imaging data to determine that the desired level of thermal injury and/or neuromodulation has not been achieved, the user and/or the processor **220** may continue the application of thermal energy and/or refine the treatment plan based on the acquired data at step **1250**.

[0198] In particular, at step **1250**, the user and/or the processor **220** may control or modulate the thermal neuromodulation by using the measured parameters from step **1236** as feedback. For example, in some embodiments, at least one sensor **1035** may be configured as a temperature sensor able to measure the temperature of the vessel wall and/or the non-target tissue. If the sensed temperature falls above a therapeutic range indicating a safe range for thermal neuromodulation or the sensed temperature reaches a temperature indicating the desired level of renal nerve injury or ablation, the ablation system **100** may be configured to alert the user and/or the processor to stop the application of thermal energy at step **1246**. For example, in some instances, desired neuromodulative effects may occur as a result of raising the temperature of the target nerves to a temperature ranging from about 42 to about 48 degrees Celsius. For example, in some embodiments, the sensed vessel wall temperature should not exceed approximately 62 degrees Celsius. These temperature thresholds are provided for illustrative purposes only, and are not intended to be limiting.

[0199] At step **1242**, if the sensed temperature falls within the therapeutic range indicating a safe range for thermal neuromodulation or the sensed temperature has not yet reached a temperature indicating the desired level of renal nerve injury or ablation, the system **100** may be configured to alert the user and/or the processor to continue the application of thermal energy and/or refine the treatment plan at step **1250**. The potential for undesirably injuring the non-target tissue may be weighed against the expected benefits of thermally neuromodulating the target tissue.

[0200] In alternate embodiments, at least one sensor **1035** may be configured as an impedance or conductance sensor,

obtaining data about the impedance of the vessel wall **1310** at any given point. Such sensors may measure the impedance of alternating current (AC) circuits between the electrode **1030** and the vessel wall **1310**, and may include a measurement of both a real portion or magnitude of the impedance, and an imaginary portion or phase angle of the impedance. The impedance magnitude and phase angle generated at an appropriate frequency by the portion of the vessel wall **710** coupled to the electrode may provide a tissue signature. To enhance the accuracy of tissue signature measurements, a plurality of individual measurements may be taken and averaged. By measuring tissue signatures at a plurality of different frequencies within a frequency range, a signature profile for the portion of the vessel wall **1310** may be generated. In some embodiments, the various tissue signature measurements about a circumferential portion of the vessel wall **1310** may be compared to distinguish between healthy tissue, calcified plaque, fibrous plaque, lipid-rich plaques, untreated tissue, partially treated tissue, fully treated tissue, and the like. The user and/or the processor **220** may use the tissue profiles to determine where in the vessel wall **1310** the patient requires more neuromodulation and/or the effectiveness of the applied neuromodulation treatment.

[0201] In alternate embodiments, at least one sensor **1035** may be configured as a sensor of nerve conductivity/traffic/activity, obtaining data about the neurological activity of the renal nerves **870** overlying the vessel wall at any given point before, during, and/or after the neuromodulation procedure. Such sensors may measure the neurological activity of the renal nerves **870** overlying the vessel wall **710**, and may include a measurement of afferent and/or efferent conductivity. In some embodiments, the various neurological conductivity measurements about a circumferential portion of the vessel wall **1310** may be compared to distinguish healthy neural tissue from damaged or ablated neural tissue. The user and/or the processor **220** may use the sensed data about neural conductivity/activity/traffic to determine where neural plexus overlying in the vessel wall **1310** the patient requires more neuromodulation and/or the effectiveness of the applied neuromodulation treatment. In some embodiments (not pictured in FIG. **29***b*), the user and/or the processor **220** may use the sensed data about neural conductivity/activity/traffic to determine whether the patient requires more neuromodulation after the other sensed data and/or imaging data suggest that the thermal neuromodulation procedure is complete.

[0202] In some embodiments, at least one sensor **1035** may be configured as a chemical or hormonal sensor, obtaining data about the sympathetic activity of the patient within the vessel **1300**. For example, the sensor **1035***a* may monitor a norepinephrine level with the patient's blood, e.g., within the renal vessel **1300**. Elevated norepinephrine levels may indicate elevated sympathetic activity. If the norepinephrine level rises above a certain threshold, the sensor **1035***a* may monitor renal blood flow and/or renal blood pressure within the renal artery **1300**. Because sympathetic efferent activation causes renal vasoconstriction and a reduction in renal blood flow, blood flow and/or blood pressure in the renal vessel **1300** may indicate the level of renal sympathetic activity. If blood flow to kidneys is decreased and/or renal blood pressure is increased, the sensor **1035***a* may identify an increase in sympathetic activity and send data reflecting this information to the user (via the controller **210**) and the processor **220**. Once the blood flow and/or blood pressure return to normal, the sensor **1035***a* may switch back to monitoring norepinephrine levels. In alternate embodiments, the expandable structure **1000** utilizes a plurality of sensors, e.g., **1035***a* and **1035***b*, to obtain data reflective of changes in renal sympathetic activity.

[0203] The user and/or the processor **220** may identify changes in the sympathetic activity level of a patient based on one or more sensed physiological parameters, such as, by way of non-limiting example, blood pressure, blood flow, and/or norepinephrine levels, and control thermal energy delivery to the renal nerves **870** in response to the identified changes. The user and/or the processor **220** may use the sensed physiological parameters to determine when the patient requires more neuromodulation and/or the minimum level of neuromodulation required to maintain renal sympathetic activity below a desired level.

[0204] Similarly, the imaging apparatus **980** can continuously or periodically obtain image data about the vessel wall **1310** and/or a target object associated with the vessel **1300** at any given point. In some embodiments, the field of view of the imaging apparatus **980** overlaps the ablative field of the electrode **1030** such that the user and/or processor **220** can observe and image the ablation/neuromodulation in real time. Moreover, the image data obtained can be used by the characterization application **250** to output tissue characterization and the observed level of ablation in real time. To enhance the accuracy of tissue characterizations and ablation assessments, a plurality of individual characterizations and ablation assessment scores for neighboring scan lines from the image data may be taken and averaged. In some embodiments, the various tissue characterizations and ablation assessments about a circumferential portion of the vessel wall **1310** may be compared to distinguish between healthy tissue, calcified plaque, fibrous plaque, lipid-rich plaques, untreated tissue, partially treated tissue, fully treated tissue, and the like. The user and/or the processor **220** may use these tissue profiles to determine where in the vessel wall **1310** the patient requires more neuromodulation and/or the effectiveness of the applied neuromodulation treatment.

[0205] In some embodiments, as shown by steps **1234-1250** in FIG. **29***b*, the electrodes **1030** cooperate with the processor **220**, the imaging apparatus **980**, the characterization application **250**, and the sensors **1035**, **1040** to create a closed feedback loop wherein the processor **220** continuously or intermittently refines the treatment plan and application of thermal energy by directing an individual electrode or a particular combination of electrodes to deliver a particular type, magnitude, and duration of thermal energy depending upon the data received from the sensors **1035**, **1040**, the imaging apparatus **980**, and the characterization application **250**. Alternatively or additionally, the user may refines the treatment plan and application of thermal energy by directing an individual electrode or a particular combination of electrodes to deliver a particular type, magnitude, and duration of thermal energy with or without depending upon the data received from the sensors **1035**, **575**.

[0206] Steps **1234-1250** of FIG. **29***b* illustrate how the thermal neuromodulation process may be monitored and controlled by acquiring data from the imaging apparatus, the characterization application, and/or the sensors along the vessel wall **1310** in the region of treatment, and limiting the power and/or duration of the application of thermal energy to the vessel wall **1310** in response to that data. For example, in response to the data collected by the imaging devices, the characterization application, and the sensors, the user or program algorithms from the processor **220** may selectively

direct individual electrodes **1030** or combinations of electrodes **1030** to apply thermal energy to the vessel wall **1310** while other electrodes remain inactive. In addition, the user or program algorithms from the processor **220** may selectively direct individual sensors **1035**, **1040** or combinations of particular sensors **1035**, **1040** to obtain measurements while other sensors remain inactive.

[0207] In the course of the neuromodulation process and data collection, the distal portion **960** of the body **920** may be retracted proximally or advanced distally within the vessel **1300**, while the expandable structure **1000** is in an expanded condition, in order to determine a gradient of measurements and/or tissue characterizations over a longitudinal length of the vessel. For example, the user may advance and/or retract the expandable structure **1000** in **2** millimeter increments to apply thermal energy at various positions within a target vessel. Alternatively, the expandable structure **1000** may be repeatedly contracted or unexpanded, and the catheter **850** may be axially moved to reposition the expandable structure **1000**, with subsequent expansion of the expandable structure **1000** at each of a plurality of treatment locations along the vessel **1300**.

[0208] At step **1246**, after determining that the neuromodulation process is complete based on the intravascular image data, the sensed data, and/or the tissue characterization data, the user may stop the application of thermal energy and, at step **1252**, begin the process of removing the thermal basket catheter **850** from the target vessel and the patient's body. Initially, the user may return the elongated body actuator **1010** located on the handle **930** to a non-deployed position within the actuator recess **1011** (shown in FIG. **19**). As a result, the outer sleeve **1055** may be advanced towards the distal portion **960**, as shown in FIGS. **22** and **24**, thereby allowing the body **920** to assume an unexpanded condition. While advancing towards the distal portion **960**, an inner wall of the outer sleeve **1055** engages and compresses the expandable structure **1000** inwardly, thereby permitting the expandable structure **1000** to be received within the sleeve lumen **1060** and returning the expandable structure **1000** to a non-deployed, unexpanded configuration, as illustrated in FIG. **23**. Prior to removing the catheter **850** from the blood vessel **1300**, the user may delivery a therapeutic agent to an area of interest with the catheter **1300** through the guidewire port **1045**, for example. Thereafter, the catheter **850** and the guidewire **1050** may be removed from the patient and the entry incisions may be closed.

[0209] The devices, systems, and methods described herein may be used to characterize tissue and provide real-time feedback as to the level of ablation during a variety of ablation and/or neuromodulation applications, including without limitation: carotid body ablation, cardiac ablation (including myocardial and valvular ablation, e.g., the mitral or atrial valves), renal neuromodulationintravascular lesion ablation, and chronic total occlusion ablation. In each of these embodiments, the database or memory **245** would be configured to contain pre-determined tissue imaging properties **480** and secondary parameters **490** associated with particular types of tissue at varying levels of ablation. The imaging apparatus **180** utilizes this database **245** to compare and correlate the signal properties of the tissue-of-interest with the pre-determined properties **480** to accurately characterize the tissue and determine the real-time level of ablation.

[0210] The systems and methods described herein provide automated, reliable, and reproducible tissue and ablation level characterization using a combination ablation and imaging probe and a database containing pre-determined tissue properties for various types and ablation levels of tissue components, thus reducing the need for highly trained, highly experienced observers and generally eliminating observer bias (as well as intra- and inter-observer variability). In addition, the systems and methods described herein may allow for an evaluation of the ablation therapy from the tissue characterization in real-time, thereby reducing the need for tissue biopsies and the time necessary to receive a diagnosis from the biopsy results. Even in instances where a biopsy is still indicated after tissue characterization by the systems and methods disclosed herein, the systems and methods described above may be utilized to provide detailed image guidance for biopsies (i.e., directing the user to a particular tissue type, tissue margin, or ablated area for biopsy). Moreover, the systems and methods disclosed herein offer the ability to analyze multiple parameters, such as, by way of non-limiting example, a patient's pre-existing medical condition, the sensed characteristics of the target object (e.g., temperature and impedance), the imaging data from multiple imaging modalities, the tissue characterization, and the determination of ablation level to optimize real-time evaluation and monitoring of an ablative procedure.

[0211] While the present invention has been illustrated by the description of embodiments thereof, and while the embodiments have been described in considerable detail, it is not the intention of the applicants to restrict or in any way limit the scope of the appended claims to such detail. Additional advantages and modifications will readily appear to those skilled in the art. Therefore, the invention, in its broader aspects, is not limited to the specific details, the representative apparatus, and illustrative examples shown and described. Accordingly, departures may be made from such details without departing from the spirit or scope of the applicant's general inventive concept.

[0212] The following includes definitions of selected terms used throughout the disclosure. Both singular and plural forms of all terms fall within each meaning.

[0213] "Computer-readable medium," as used herein, refers to any medium that participates in directly or indirectly providing signals, instructions and/or data to one or more processors for execution. Such a medium may take many forms, including but not limited to, non-volatile media, volatile media, and transmission media. Non-volatile media may include, for example, optical or magnetic disks. Volatile media may include dynamic memory. Transmission media may include coaxial cables, copper wire, and fiber optic cables. Transmission media can also take the form of acoustic or light waves, such as those generated during radio-wave and infra-red data communications, or take the form of one or more groups of signals. Common forms of computer-readable media include, for example, a floppy disk, a flexible disk, hard disk, magnetic tape, or any other magnetic medium, a CD-ROM, any other optical medium, punch cards, papertape, any other physical medium with patterns of holes, a RAM, a PROM, an EPROM, a FLASH-EPROM, any other memory chip or cartridge, a carrier wave/pulse, or any other medium from which a computer, processor or other electronic device can read.

[0214] "Logic," as used herein, includes, but is not limited to, hardware, firmware, software and/or combinations of each to perform a function(s) or an action(s), and/or to cause a function or action from another component. For example,

based on a desired application or needs, logic may include a software controlled microprocessor, discrete logic such as an application specific integrated circuit (ASIC), a programmed logic device, memory device containing instructions, or the like. Logic may also be fully embodied as software.

[0215] "Signal," as used herein, includes, but is not limited to, one or more electrical signals, analog or digital signals, one or more computer or processor instructions, messages, a bit or bit stream, or other means that can be received, transmitted, and/or detected.

[0216] "Software," as used herein, includes, but is not limited to, one or more computer readable and/or executable instructions that cause a computer or other electronic device to perform functions, actions, and/or behave in a desired manner. The instructions may be embodied in various forms such as routines, algorithms, modules or programs including separate applications or code from dynamically linked libraries. Software may also be implemented in various forms such as a stand-alone program, a function call, a servlet, an applet, instructions stored in memory, part of an operating system or other type of executable instructions. It will be appreciated by one of ordinary skill in the art that the form of software is dependent on, for example, requirements of a desired application, the environment it runs on, and/or the desires of a designer/programmer or the like. Suitable software for implementing the various components of the present system and method using the teachings presented here include programming languages and tools such as Java, Pascal, C#, C++, C, CGI, Perl, SQL, APIs, SDKs, assembly, firmware, microcode, and/or other languages and tools. The components embodied as software include readable/executable instructions that cause one or more computers, processors and/or other electronic device to behave in a prescribed manner. Any software, whether an entire system or a component of a system, may be embodied as an article of manufacture and maintained as part of a computer-readable medium as defined previously. Another form of the software may include signals that transmit program code of the software to a recipient over a network or other communication medium. It will be appreciated that components described herein may be implemented as separate components or may be combined together.

[0217] "User," as used herein, includes, but is not limited to, one or more persons, software, computers or other devices, or combinations of these.

[0218] Persons of ordinary skill in the art will appreciate that the embodiments encompassed by the present disclosure are not limited to the particular exemplary embodiments described above. In that regard, although illustrative embodiments have been shown and described, a wide range of modification, change, and substitution is contemplated in the foregoing disclosure. It is understood that such variations may be made to the foregoing without departing from the scope of the present disclosure. Accordingly, it is appropriate that the appended claims be construed broadly and in a manner consistent with the present disclosure.

What is claimed is:

1. A system for ablating and characterizing tissue, the system comprising:

an ablation element configured to emit ablative energy toward a tissue of interest;

an imaging apparatus configured to emit energy and collect imaging data including reflected signals from the tissue of interest; and

a characterization application comprising:

a signal analyzer for analyzing the imaging data and determining one or more signal properties from the reflected signals; and

a correlation processor configured to associate the one or more signal properties to pre-determined tissue signal properties of different tissue components through a pattern recognition technique wherein the pre-determined tissue signal properties are embodied in a database, the correlation processor further configured to identify a tissue component and an ablation level of the tissue of interest based on the pattern recognition technique.

2. The system of claim **1**, wherein the imaging apparatus includes more than one imaging modality and the characterization application is configured to collect imaging data via more than one imaging modality.

3. The system of claim **2**, wherein the signal analyzer is configured to analyze more than one type of imaging data to determine signal properties associated with each imaging modality, and the correlation processor is configured to identify the tissue component and the ablation level of the tissue of interest based on associating the signal properties to pre-determined tissue signal properties of different tissue components and different ablation levels for the different imaging modalities.

4. The system of claim **2**, wherein the correlation processor is configured to recognize the type of imaging modality employed by the imaging apparatus and to use the corresponding pre-determined tissue signal properties to identify a tissue component of the object based on the pattern recognition technique.

5. The system of claim **1**, wherein the pre-determined tissue signal properties are embodied in the database as a classification tree having branch node conditions based on the pre-determined tissue signal properties and one or more leaf nodes that identify the tissue component and the ablation level.

6. The system of claim **5**, wherein the correlation processor is configured to traverse the classification tree to a leaf node based on the pattern recognition technique of comparing the one or more signal properties from the reflected signals to the branch node conditions.

7. The system of claim **1**, wherein the pre-determined tissue signal properties are embodied in the database as an artificial neural network having one or more nodes that identify a tissue component.

8. The system of claim **1**, wherein the pre-determined tissue signal properties are embodied in the database as a regression tree having branch node conditions based on the pre-determined tissue signal properties and one or more leaf nodes that identify a tissue component.

9. The system of claim **1**, wherein the pattern recognition technique used by the correlation processor includes a random forest classifier.

10. The system of claim **1**, further including secondary parameters embodied in the database, the secondary parameters each associated with particular pre-determined tissue signal properties, wherein the correlation processor uses the secondary parameters to more accurately associate the signal properties to the pre-determined tissue signal properties associated with the secondary parameters.

11. The system of claim **10**, wherein the secondary parameters comprise at least one of the tissue type of the tissue of

interest, the anatomic region of the tissue of interest, a frequency of energy employed by the imaging apparatus, and pre-existing health conditions of the patient.

12. The system of claim **1**, further including border detection logic configured to determine borders of the tissue of interest from the reflected signals, wherein the signal analyzer logic selectively analyzes substantially only the imaging data within the borders.

13. The system of claim **1**, further including diagnostic logic for generating an assessment as to the level of ablation based on the identified tissue components and the identified ablation levels of the tissue of interest, wherein the diagnostic logic is configured to generate a score indicative of the level of ablation.

14. An apparatus for intravascular neuromodulation and imaging, comprising:

an elongate, hollow body including a proximal portion and a distal portion, the distal portion including a distal tip, the body configured to have an unexpanded condition wherein the distal portion and the distal tip are in contact with each other, and an expanded condition wherein the distal portion and the distal tip are spaced apart from each other;

an expandable structure configured to have an expanded condition and an unexpanded condition, the expandable structure disposed in an unexpanded condition within the distal portion and proximal to the distal tip, the expandable structure including at least one support arm;

an imaging apparatus positioned on the body; and

at least one ablative element positioned on the at least one support arm of the expandable structure.

15. The apparatus of claim **14**, further comprising a sensor positioned on the at least one support arm of the expandable structure.

16. The apparatus of claim **15**, wherein the sensor comprises at least one of a temperature sensor and a chemical sensor.

17. The apparatus of claim **15**, wherein the sensor is positioned adjacent to the at least one ablative element.

18. The apparatus of claim **14**, wherein the imaging apparatus is positioned within the expandable structure on the body.

19. A method of ablating and characterizing one or more tissue components of a scanned object in a patient, the method comprising:

positioning a catheter including an ablative element and an imaging apparatus adjacent a region of interest of the scanned object;

directing ablative energy from an ablative element toward the region of interest;

receiving reflected signals from an imaging apparatus scanning the region of interest;

determining one or more signal properties of the region of interest from the reflected signals;

associating the one or more signal properties to pre-determined signal properties of tissue components of an object similar to the scanned object wherein the pre-determined signal properties comprise classification conditions stored in a data structure; and

identifying one or more tissue components and their corresponding levels of ablation based on the associating.

20. The method of claim **19**, wherein the pre-determined signal properties comprise branch node conditions based on the pre-determined signal properties and one or more leaf nodes identifying a type of tissue component having a particular level of ablation.

21. The method of claim **19**, wherein the reflected signals include a plurality of backscattered scan lines and the determining step includes determining signal properties for a plurality of segments from the plurality of scan lines.

22. The method of claim **19**, wherein the receiving step includes collecting reflected signals by a plurality of imaging modalities.

23. The method of claim **19**, wherein the receiving step includes collecting reflected signals from at least one of a carotid body, vascular plaque, and a nerve.

24. The method of claim **19**, wherein associating the one or more signal properties to pre-determined signal properties of tissue components of an object similar to the scanned object includes selecting the pre-determined tissue properties based on secondary parameters associated with the object.

* * * * *