US 20160204117A1

(19) United States

(12) Patent Application Publication

(10) Pub. No.: US 2016/0204117 A1

(43) Pub. Date: Jul. 14, 2016

Liu et al.

(54) **VERTICAL NAND AND METHOD OF MAKING THEREOF USING SEQUENTIAL STACK ETCHING AND SELF-ALIGNED LANDING PAD**

(71) Applicant: **SANDISK TECHNOLOGIES INC.**, PLANO, TX (US)

(72) Inventors: **Jin Liu**, Milpitas, CA (US); **Yanli Zhang**, San Jose, CA (US); **Murshed Chowdhury**, Fremont, CA (US); **Raghuveer S. Makala**, Campbell, CA (US); **Johann Alsmeier**, San Jose, CA (US)

(21) Appl. No.: **15/080,269**

(22) Filed: **Mar. 24, 2016**

Related U.S. Application Data

(63) Continuation-in-part of application No. 14/207,012, filed on Mar. 12, 2014, which is a continuation of application No. PCT/US2014/023276, filed on Mar. 11, 2014, Continuation-in-part of application No. 14/611,785, filed on Feb. 2, 2015, now Pat. No. 9,230,987.

(60) Provisional application No. 61/776,953, filed on Mar. 12, 2013.

Publication Classification

(51) **Int. Cl.**
H01L 27/115 (2006.01)
H01L 21/28 (2006.01)

(52) **U.S. Cl.**
CPC ***H01L 27/1157*** (2013.01); ***H01L 27/11582*** (2013.01); ***H01L 21/28273*** (2013.01)

(57) **ABSTRACT**

Alignment between memory openings through multiple tier structures can be facilitated employing a temporary landing pad. The temporary landing pad can have a greater area than the horizontal cross-sectional area of a first memory opening through a first tier structure including a first alternating stack of first insulating layers and first spacer material layers. An upper portion of a first memory film is removed, and a sidewall of an insulating cap layer that defines the first memory opening can be laterally recessed to form a recessed cavity. A sacrificial fill material is deposited in the recessed cavity to form a sacrificial fill material portion, which functions as the temporary landing pad for a second memory opening that is subsequently formed through a second tier structure including second insulating layers and second spacer material layers. A memory stack structure can be formed through the first and second tier structures.

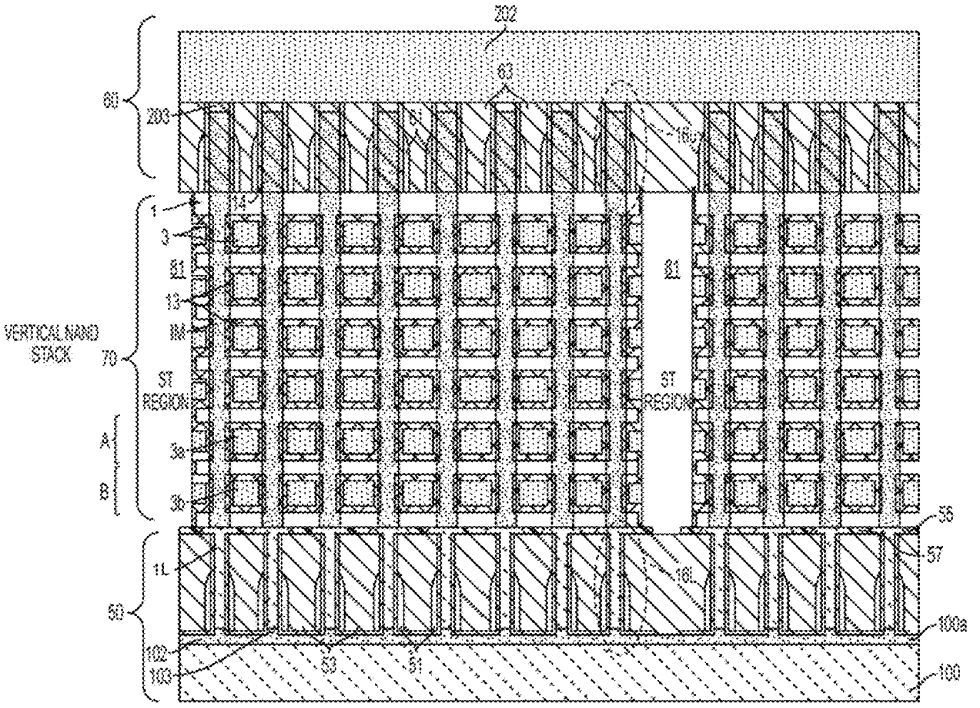

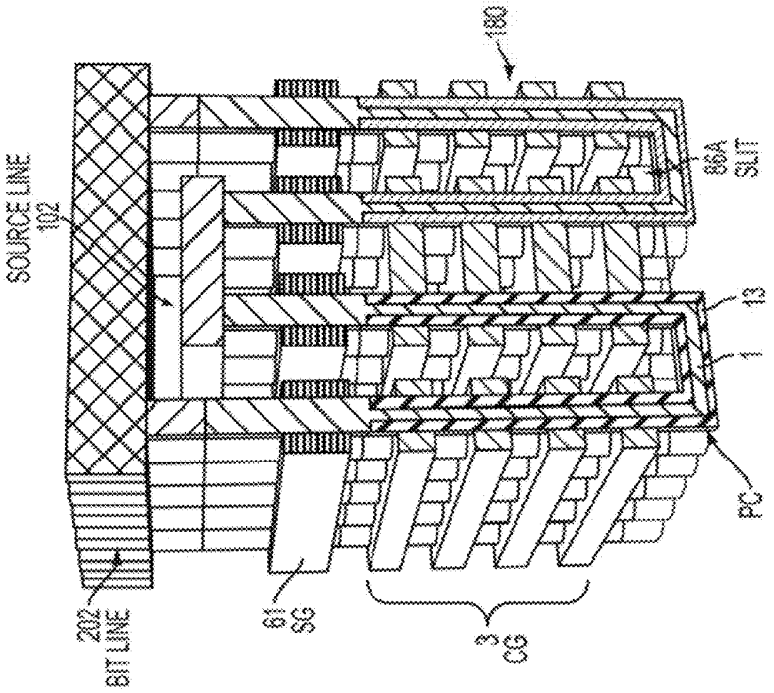

FIG. 1B
PRIOR ART

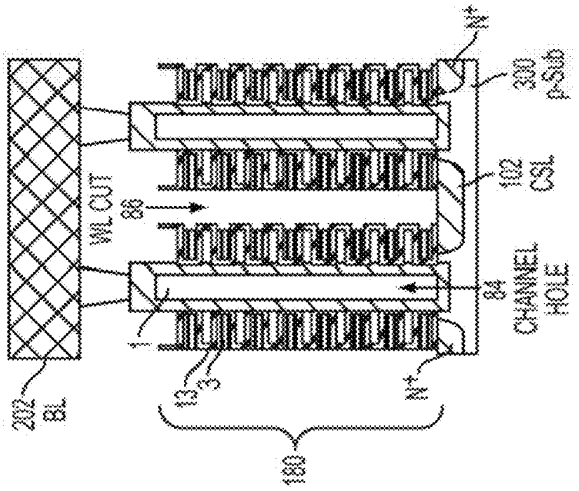

FIG. 1A
PRIOR ART

FIG. 2D

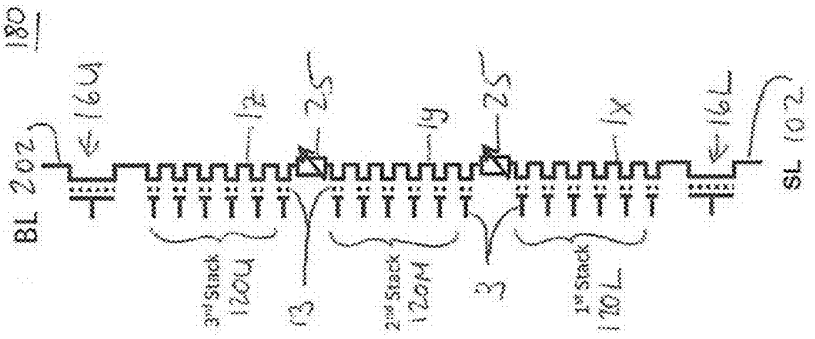
180
BL 202
16U
1z
25
1y
25
1x
16L
SL 102
3rd Stack 120U
13
2nd Stack 120M
3
1st Stack 120L

FIG. 2A

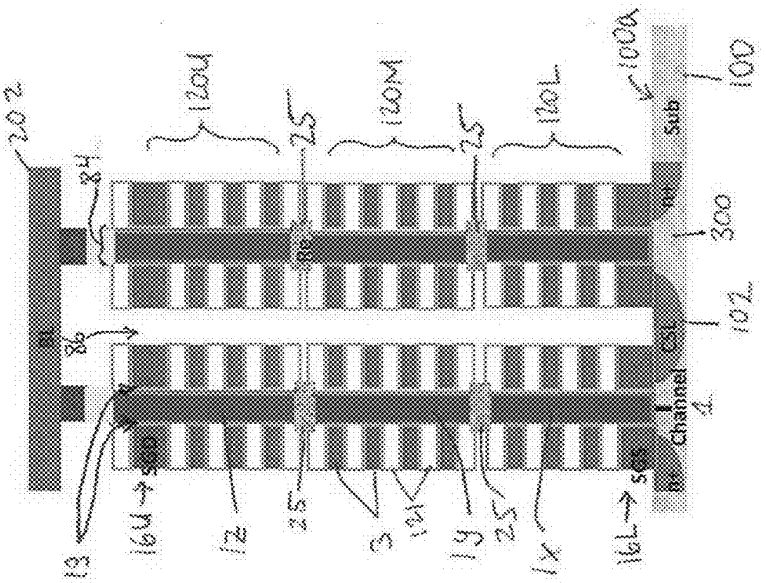
202
84
86
120U
25
120M
25
120L
100A
100
Sub
300
102
CSL
Channel
1
13
16U
SGD
1z
25
3
121
1y
25
1x
16L
SGS

FIG. 2E

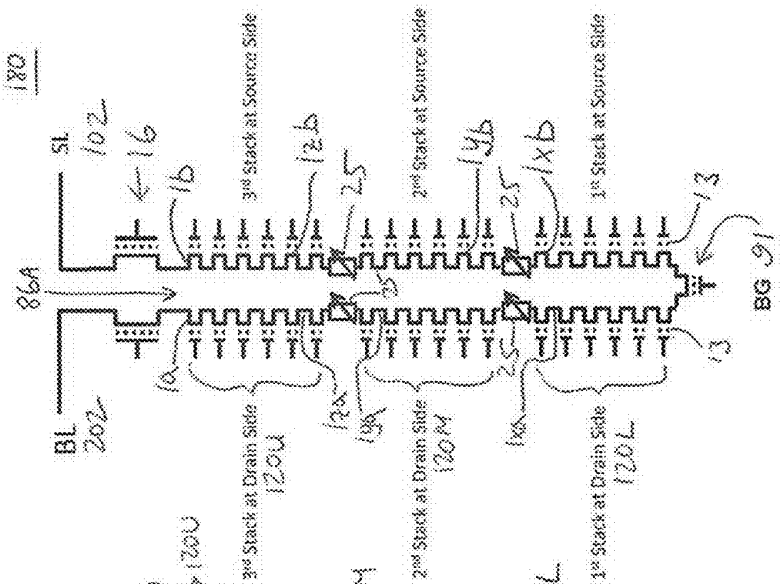
180
SL
102
16
1b
12b
25
14b
1xb
13
86A
BL
202
1a
12a
14a
1xa
3rd Stack at Source Side
2nd Stack at Source Side
1st Stack at Source Side
3rd Stack at Drain Side
120U
2nd Stack at Drain Side
120M
1st Stack at Drain Side
120L
BG
91

FIG. 2B

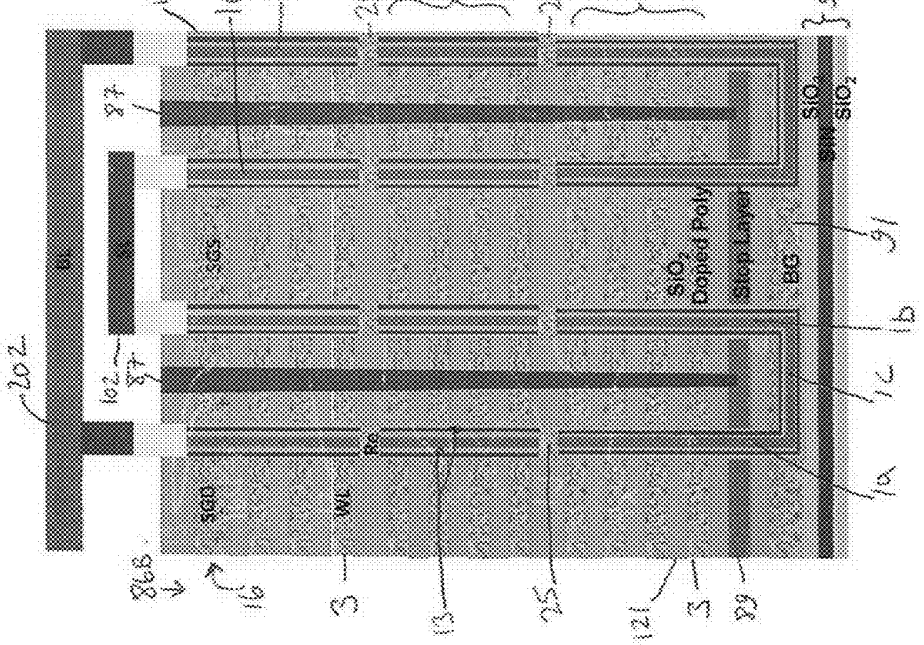
202
BL
102
87
SGS
SGD
WL
Re
SiO2
Doped Poly
Stop Layer
BG
SiO2
SW
SiO2
93
91
1b
1c
1a
86B
16
3
13
25
121
89
120U
120M
120L

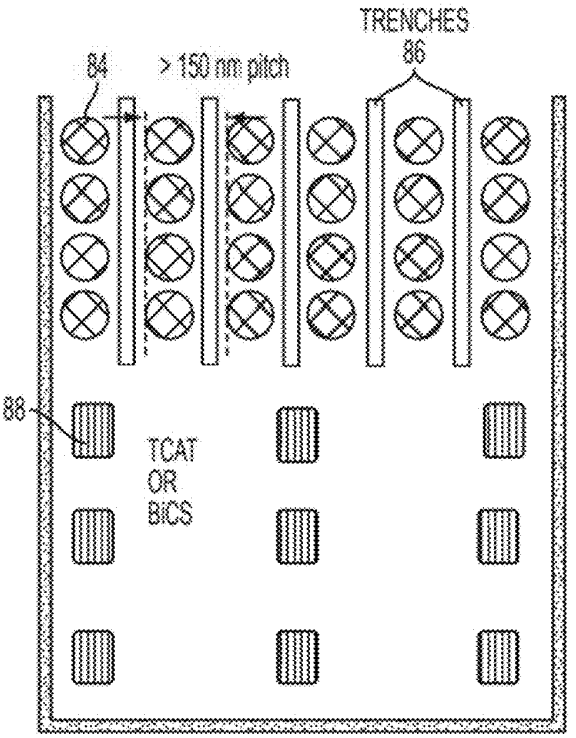

FIG. 2C
PRIOR ART

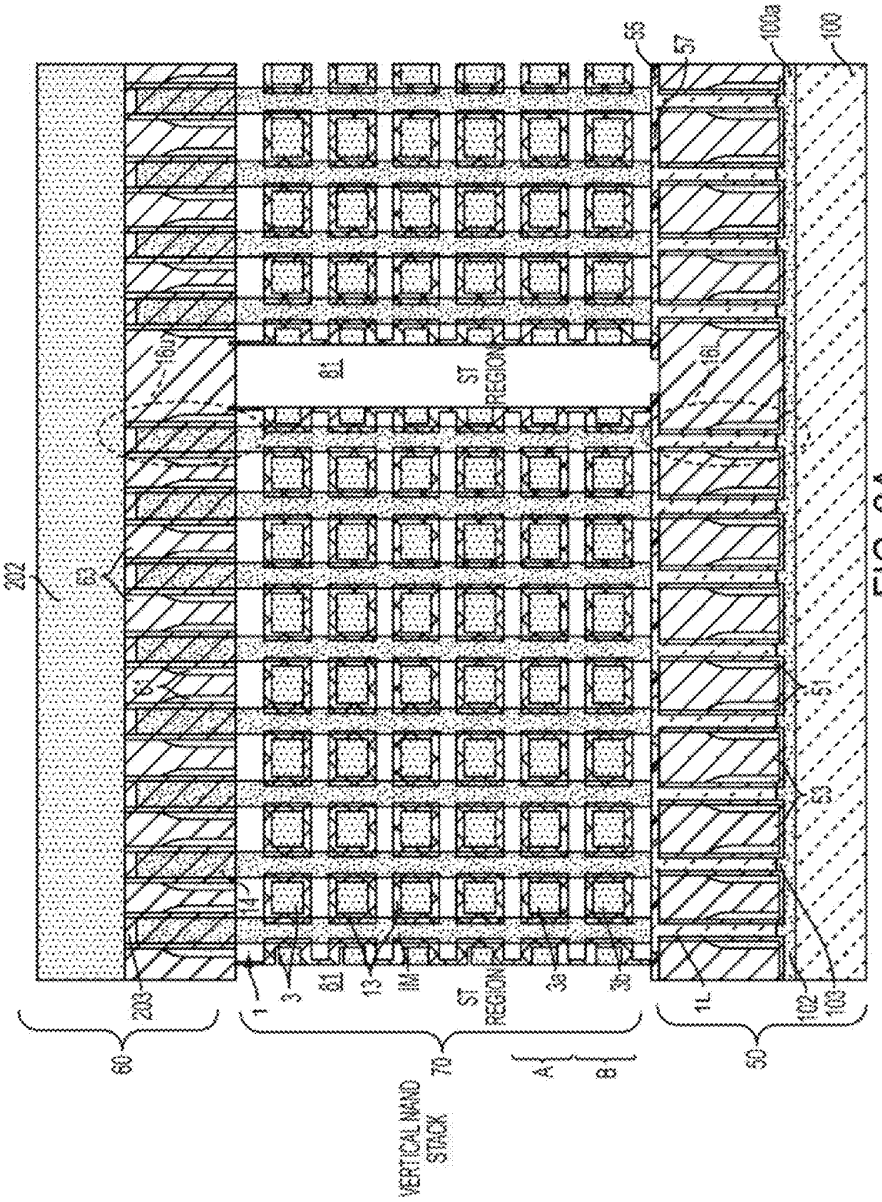
202
203
60
1
3
61
13
IM
ST REGION
3a
3b
70
A
B
VERTICAL NAND STACK
1L
102
103
50
55
57
100a
100
81
ST REGION
16b
16L
63
61
14
51
53

FIG. 3A

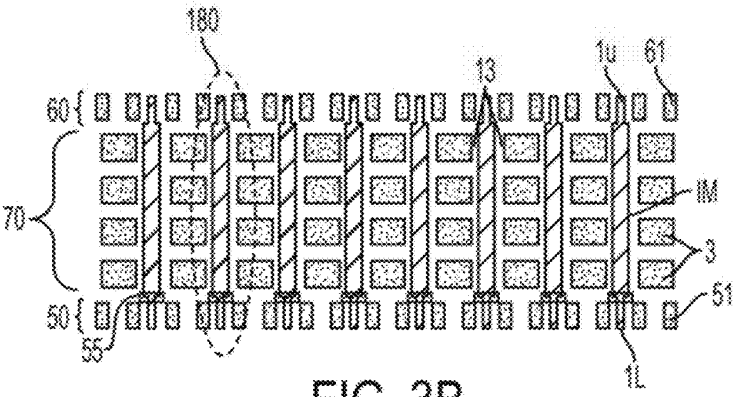

FIG. 3B

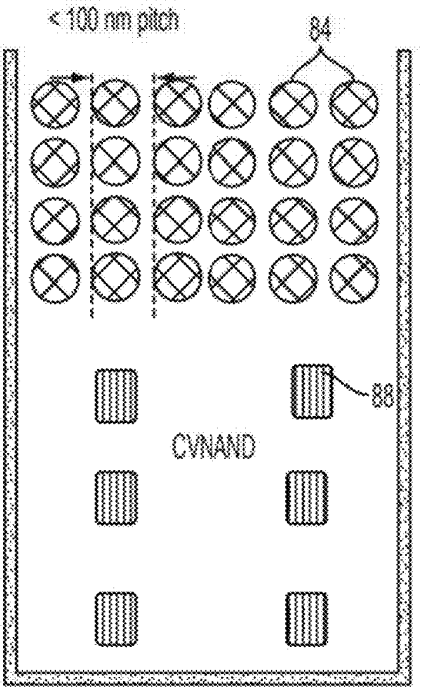

FIG. 3C
PRIOR ART

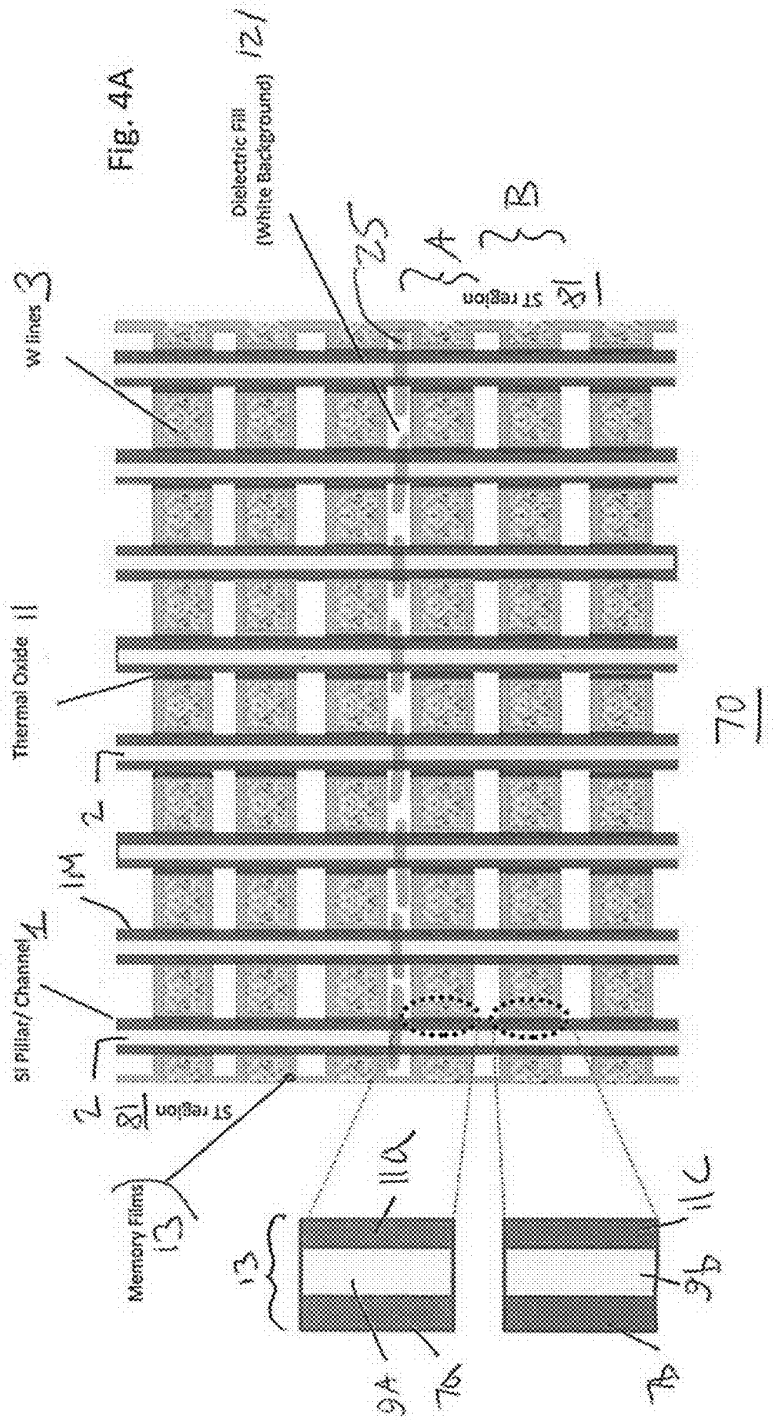
Dielectric Fill
(White Background)
121
W lines 3
25
A
B
ST region
81
Thermal Oxide 11
70
2
1M
Si Pillar/ Channel 1
2
81
ST region
Memory Films
13
13
11a
11c
9a
7a
7b
9b

Fig. 4A

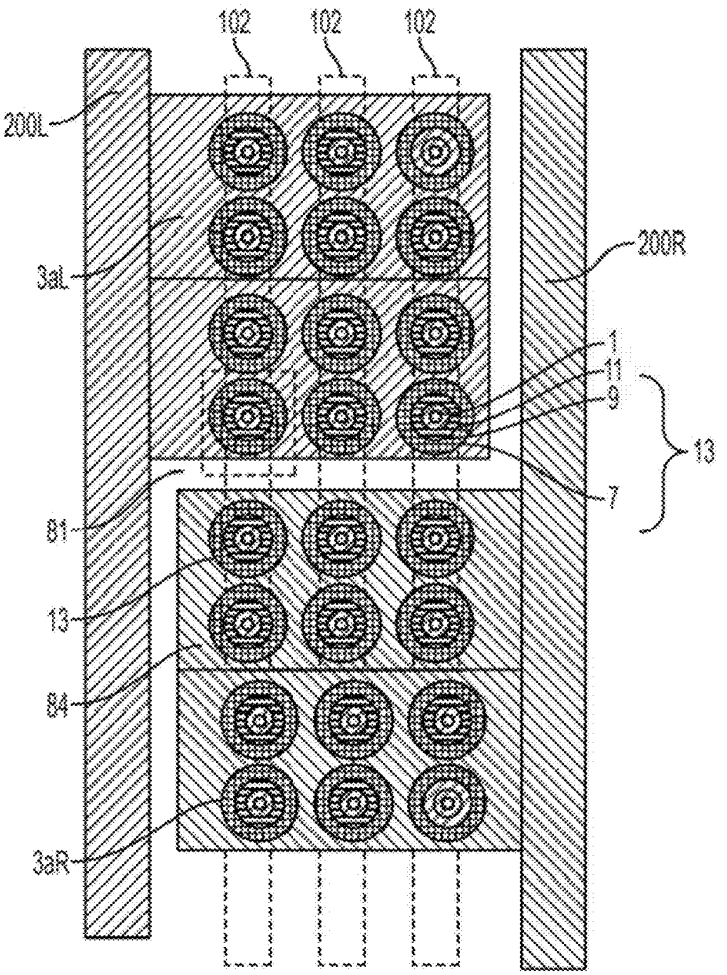

FIG. 4B

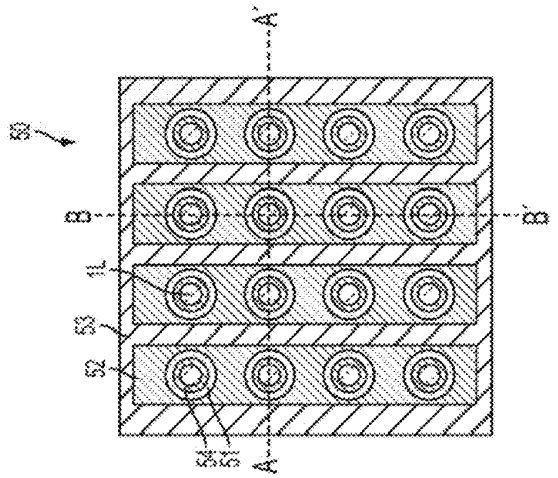

FIG. 5C

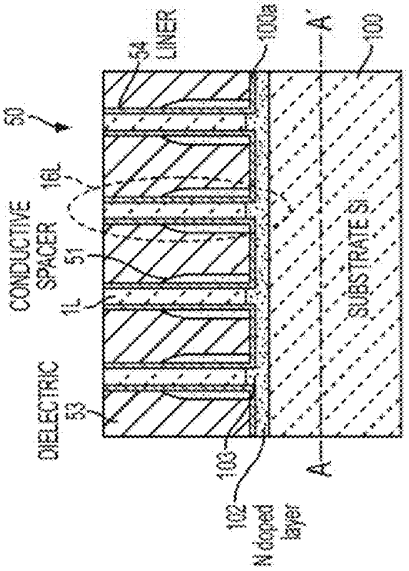

FIG. 5A

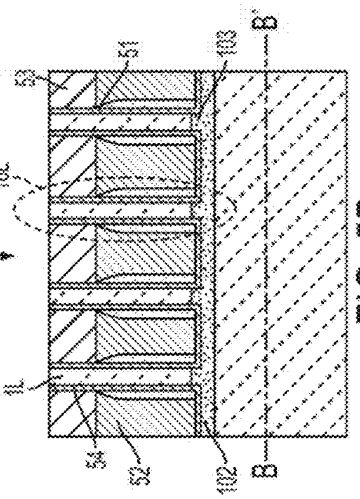

FIG. 5B

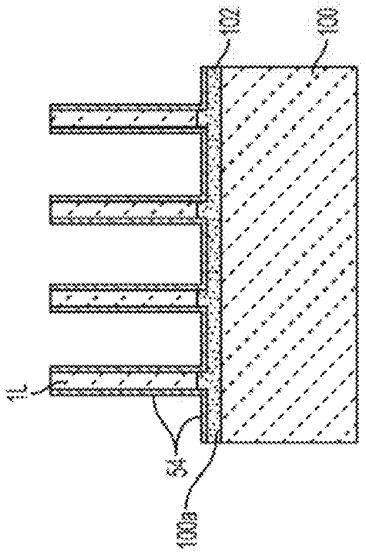

FIG. 6A

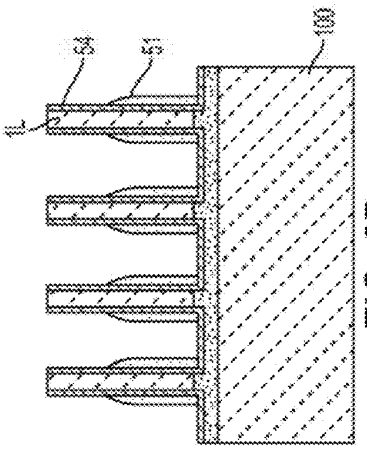

FIG. 6B

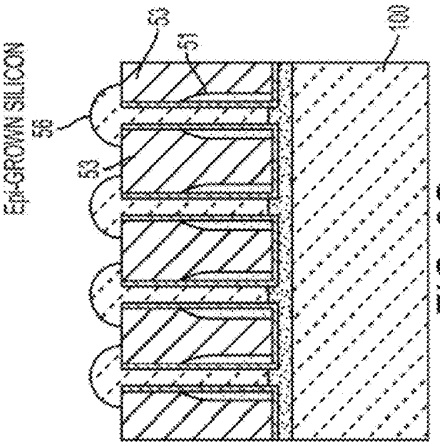

FIG. 6C

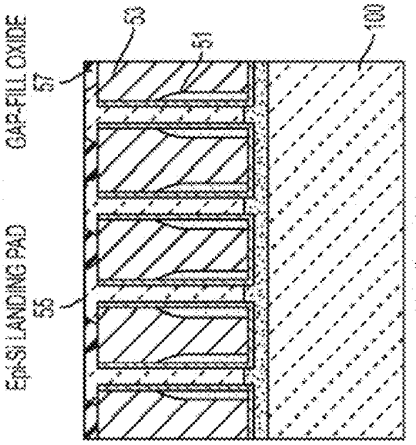

FIG. 6D

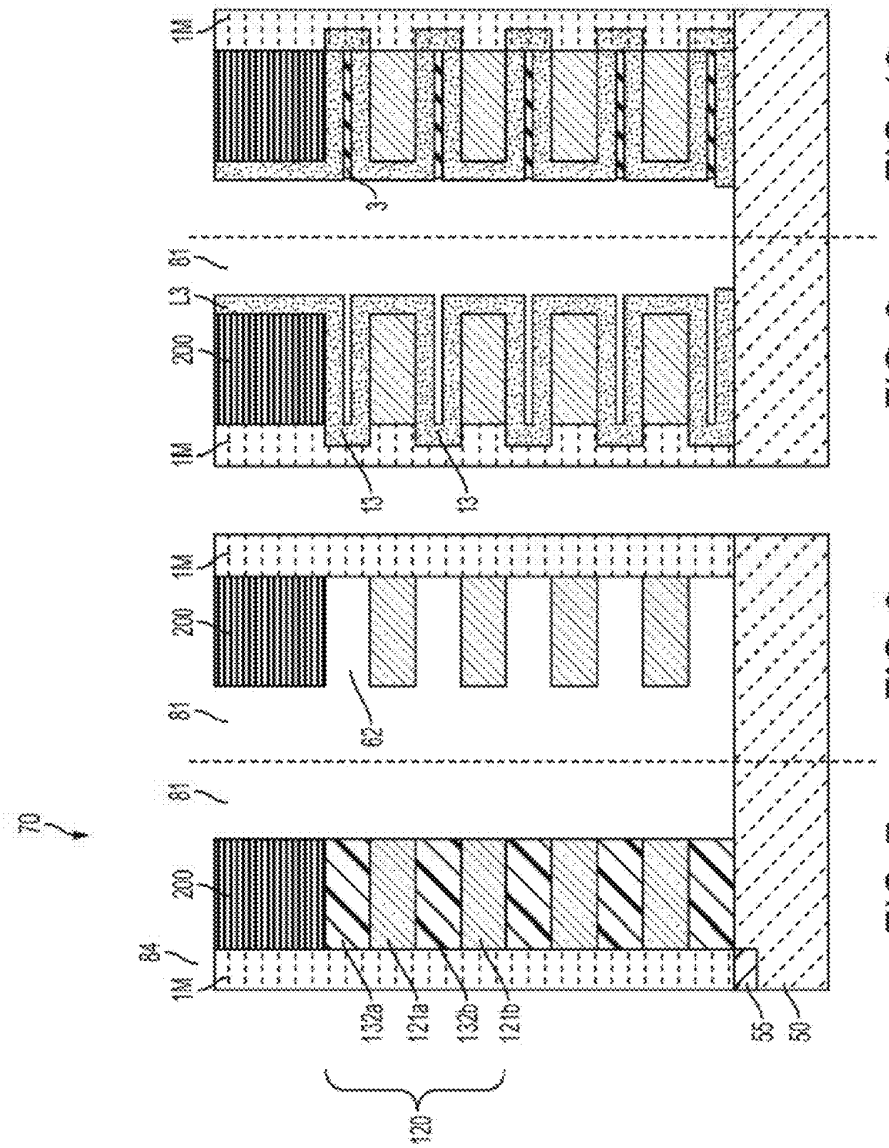

FIG. 7

FIG. 8

FIG. 9

FIG. 10

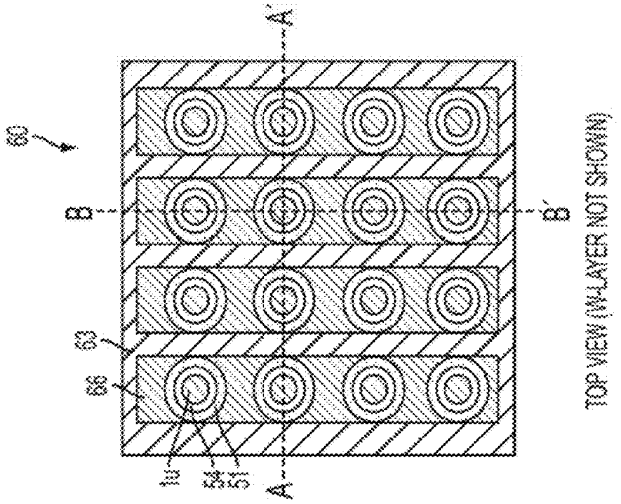

FIG. 11C

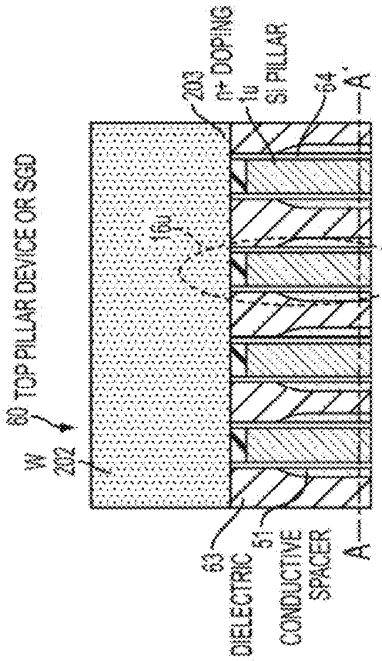

FIG. 11A

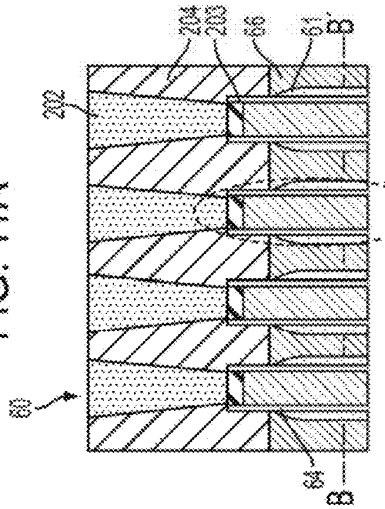

FIG. 11B

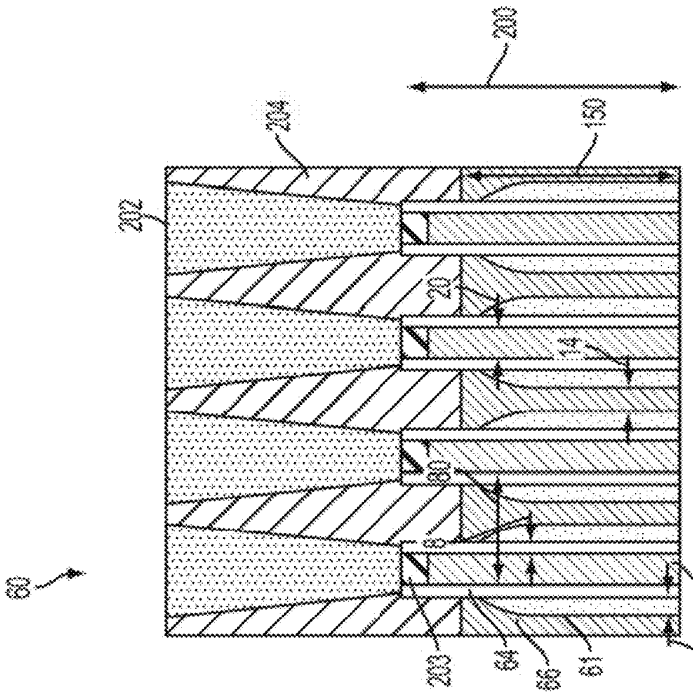

FIG. 12B

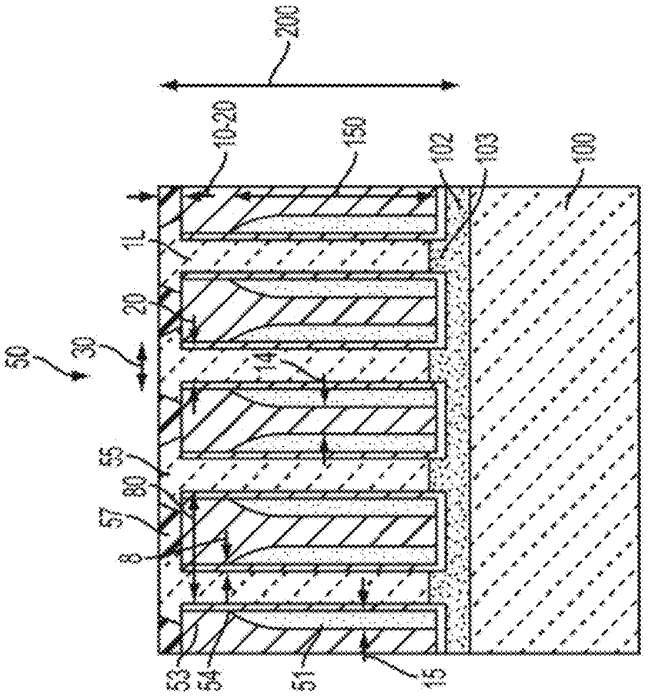

FIG. 12A

FIG. 13A

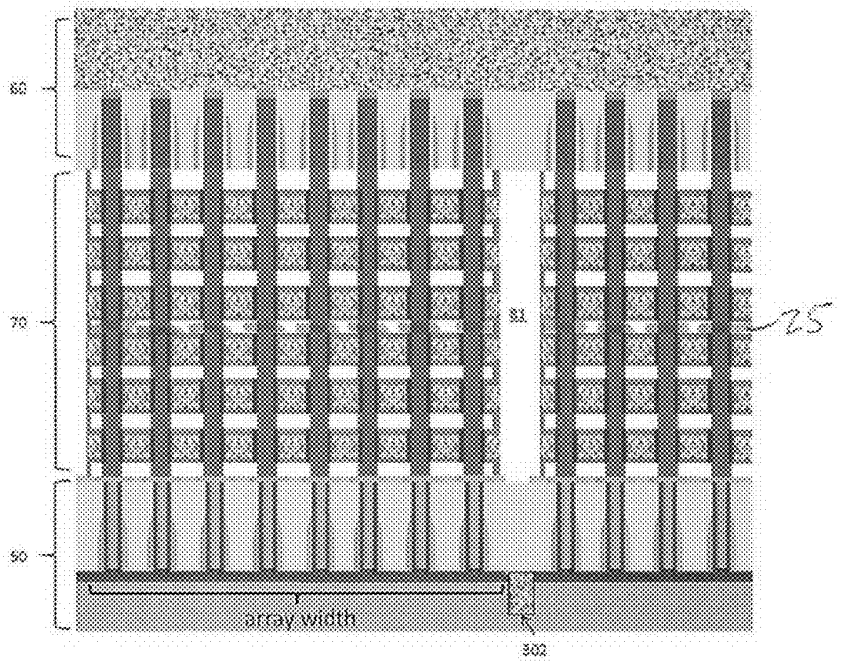

FIG. 13B

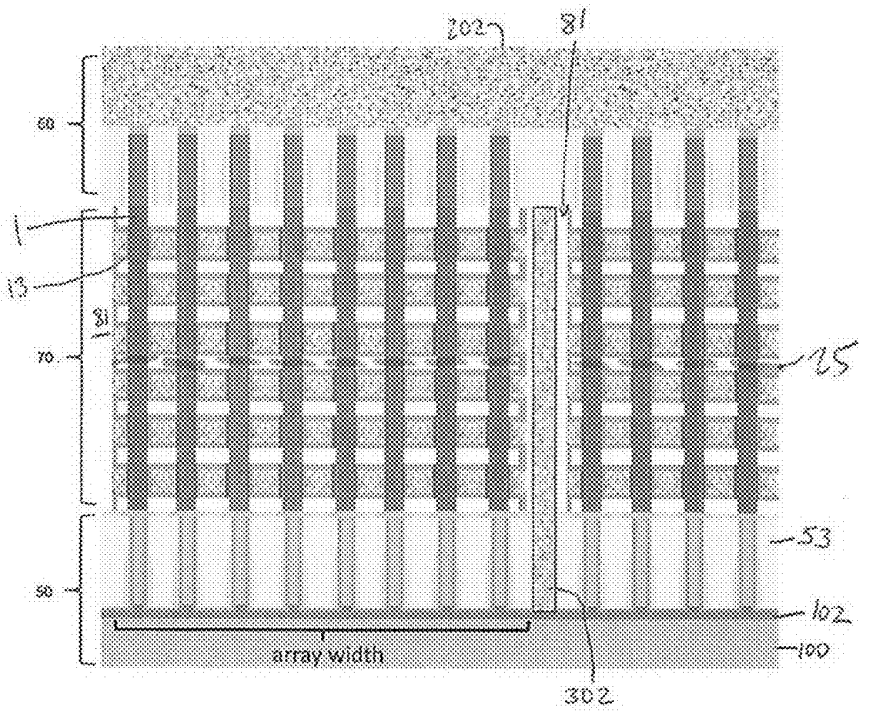

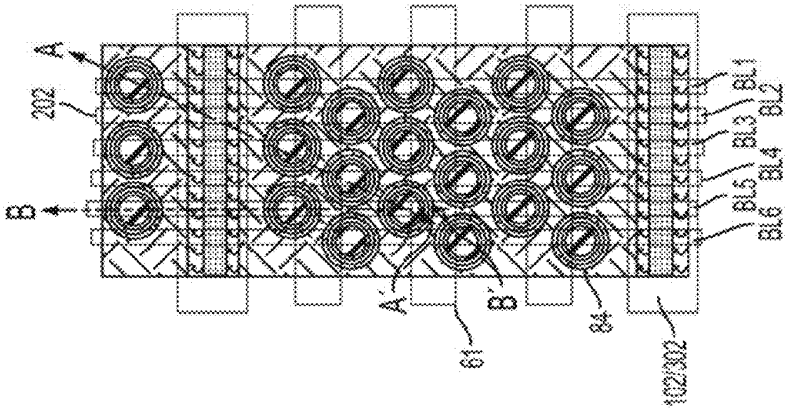

FIG. 14C

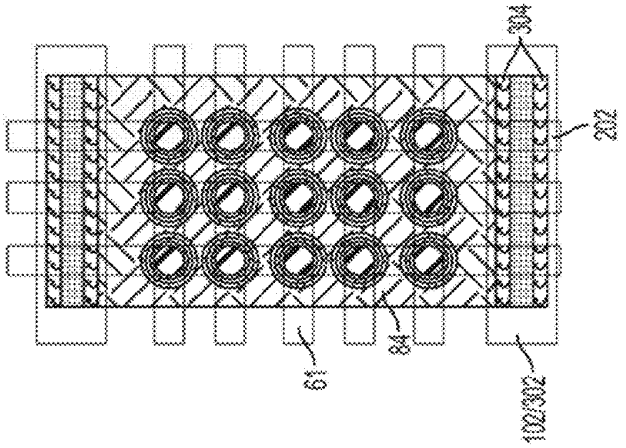

FIG. 14B

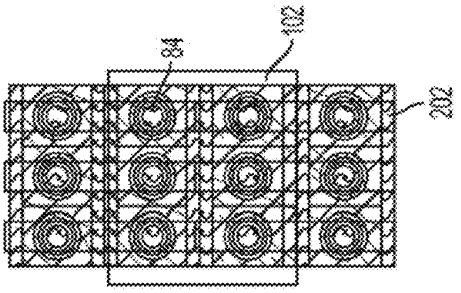

FIG. 14A
PRIOR ART

Fig. 14D

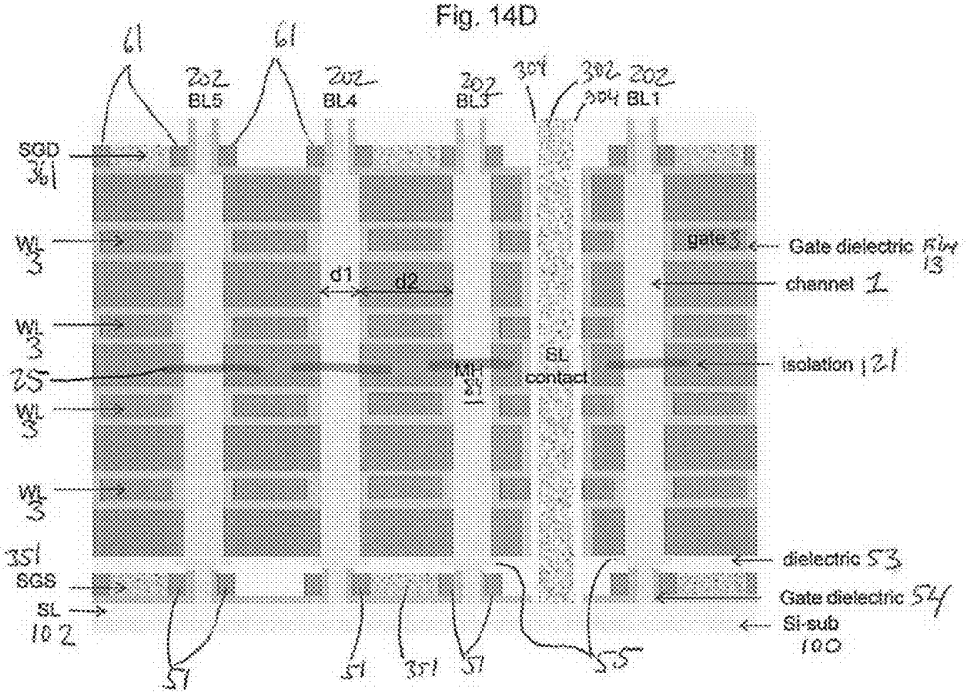
61
61
202
BL5
202
BL4
202
BL3
301
302
202
304
BL1
SGD
361
WL
3
WL
3
25
WL
3
WL
3
351
SGS
SL
102
d1
d2
MH
21
SL
contact
gate 3
Gate dielectric
channel
isolation
dielectric 53
Gate dielectric 54
Si-sub
100
57
57
371
57
55

Fig. 14E

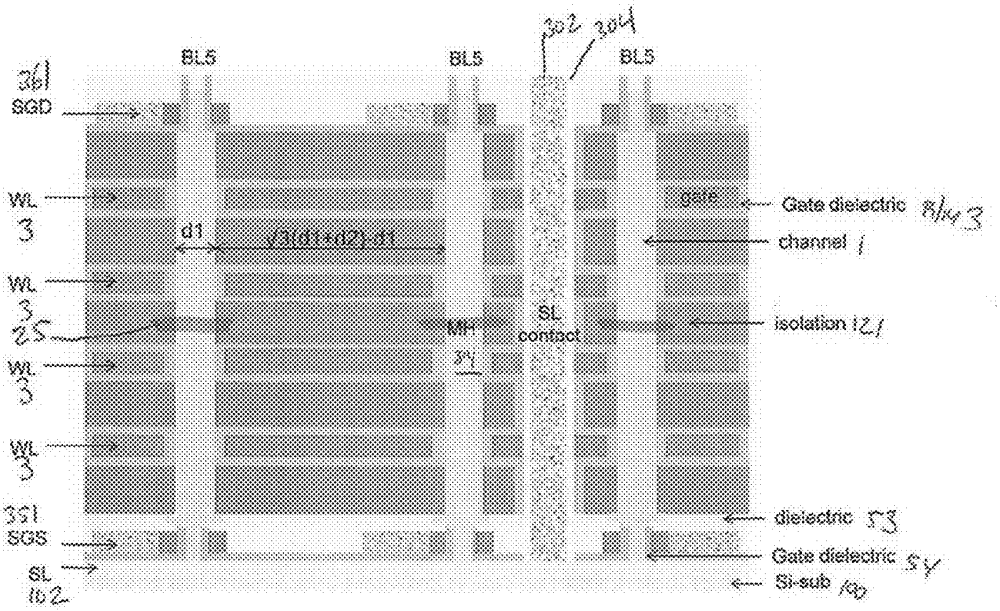
BL5
BL5
BL5
SGD
WL
WL
WL
WL
SGS
SL
d1
√3(d1+d2)-d1
MH
SL
contact
Gate dielectric
channel
isolation
dielectric
Gate dielectric
Si-sub

Fig. 15B

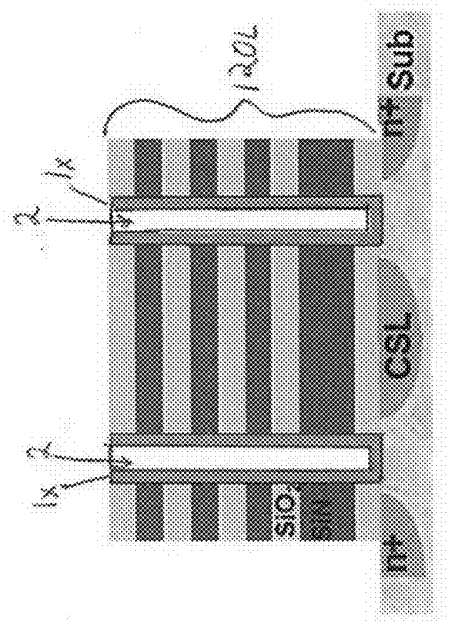

Fig. 15A

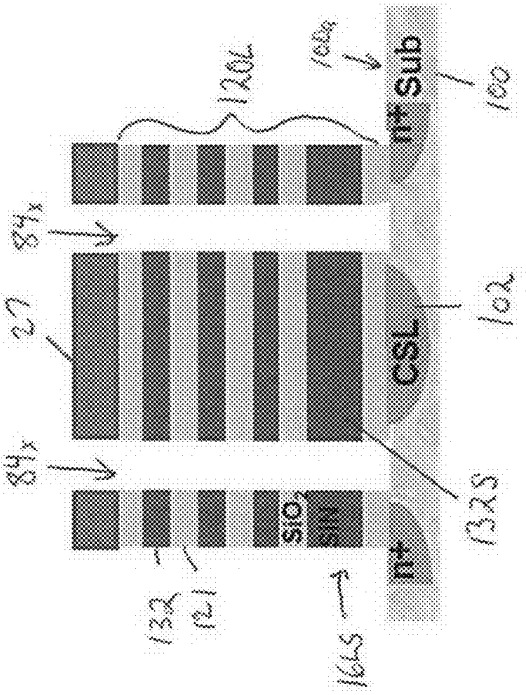

Fig. 15D

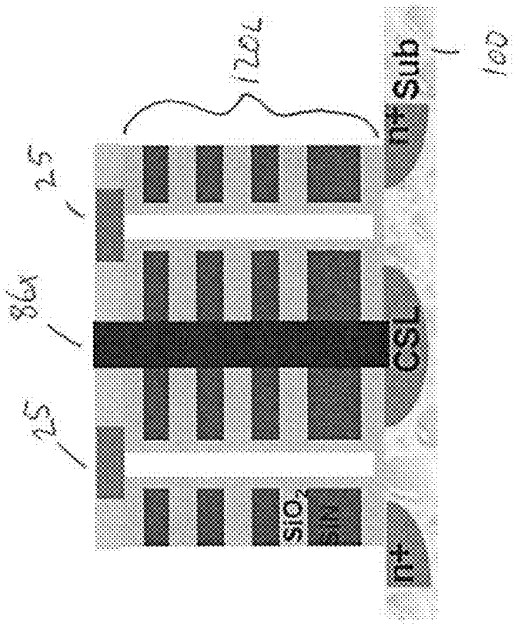

Fig. 15C

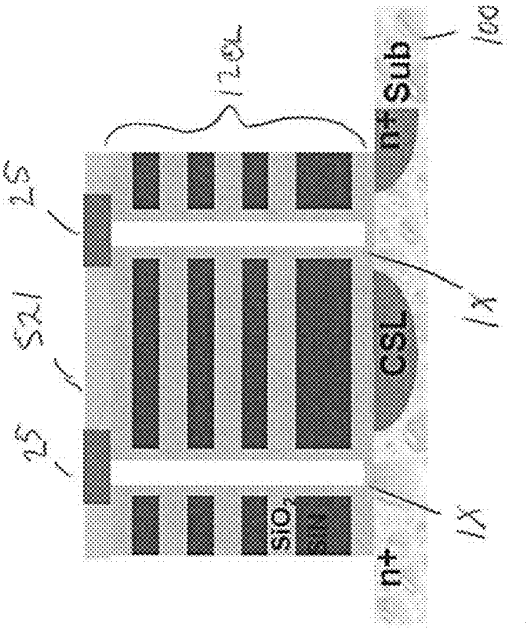

Fig. 15F

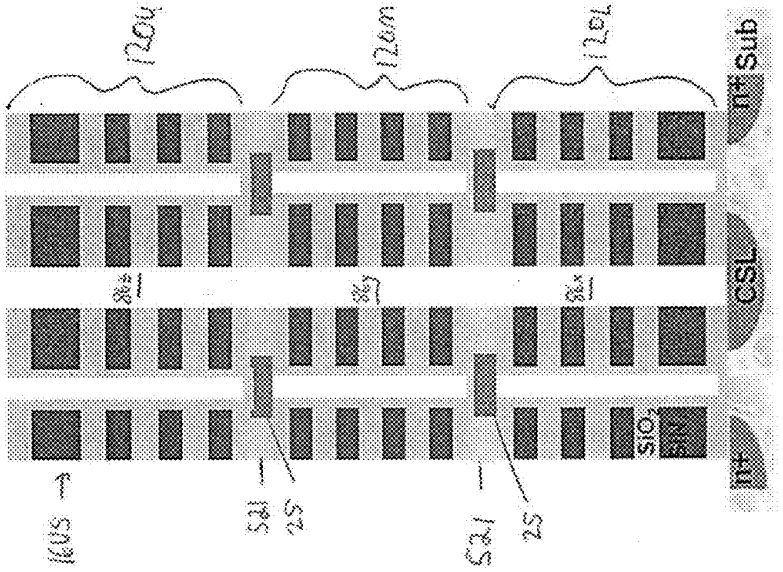

Fig. 15E

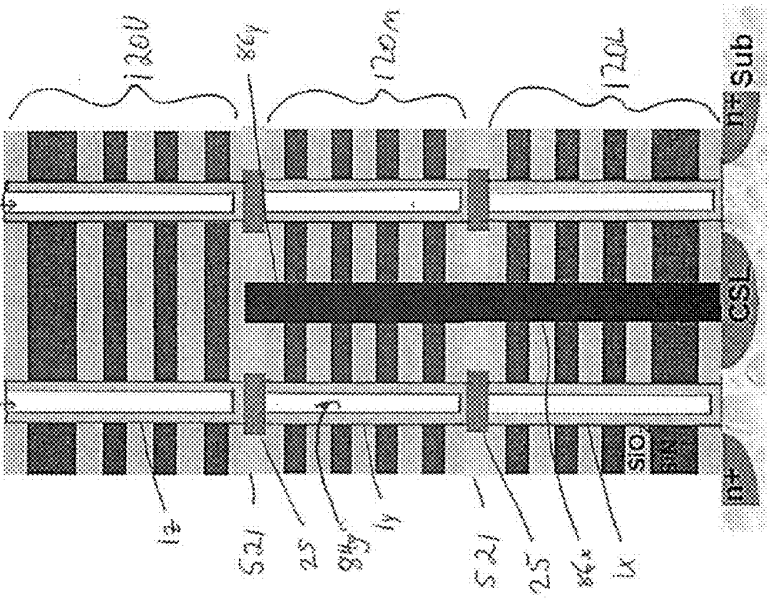

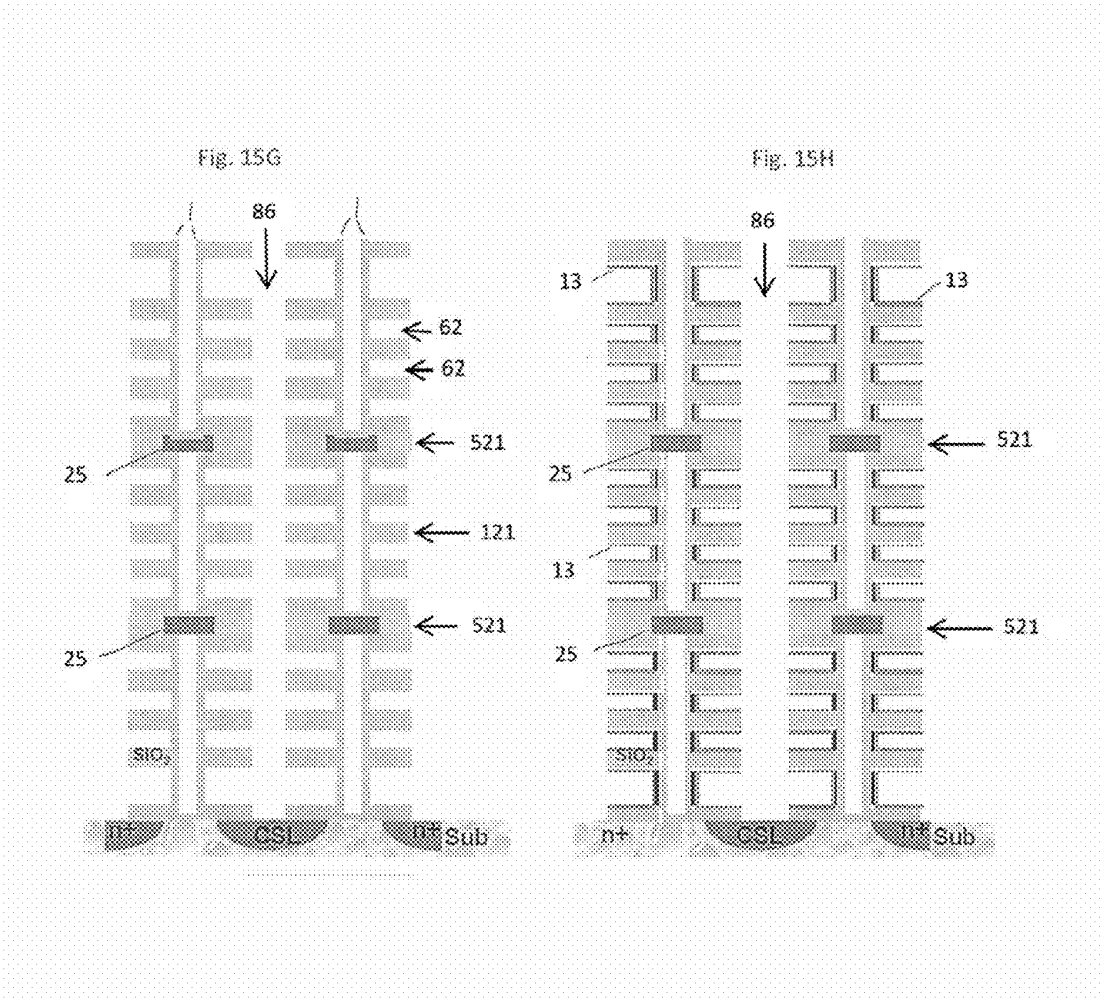
Fig. 15G
86
62
62
521
25
121
521
25
SiO2
n+
CSL
n+
Sub
Fig. 15H
86
13
13
521
25
13
521
25
SiO2
n+
CSL
n+
Sub

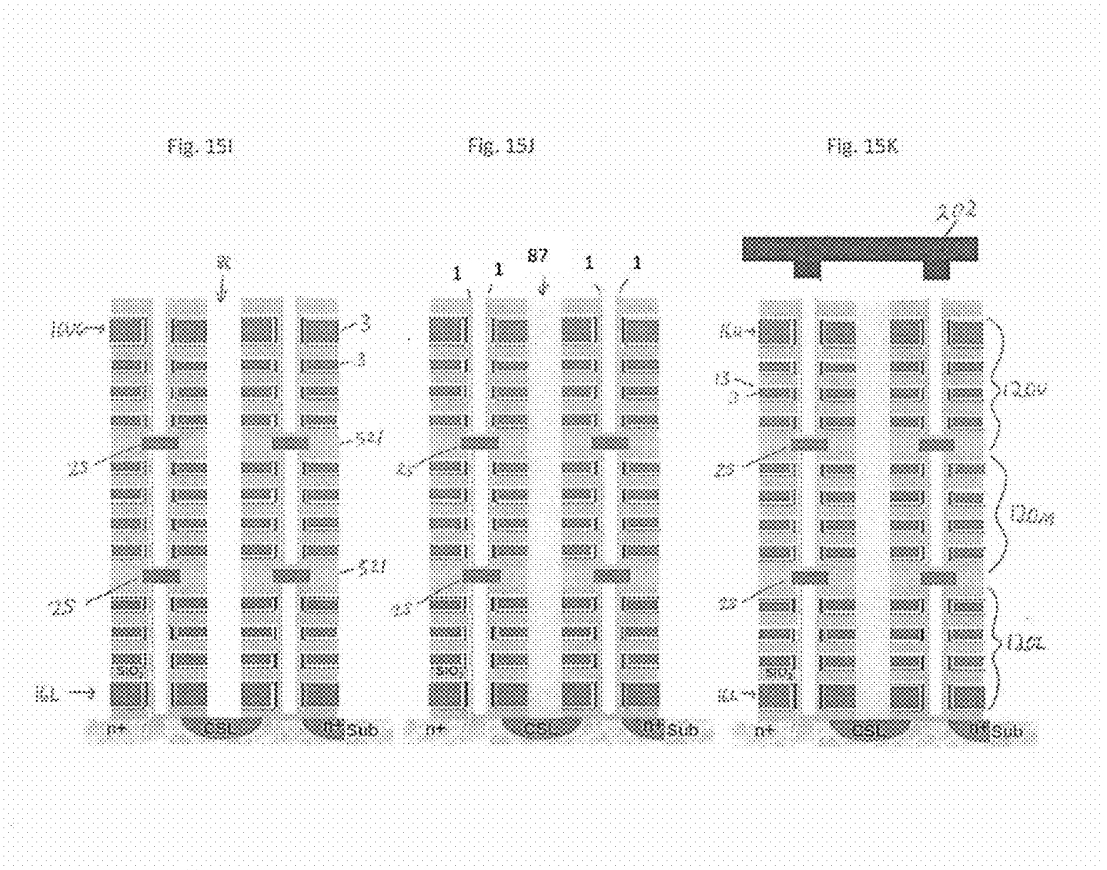
Fig. 15I
Fig. 15J
Fig. 15K
87
1
1
1
1
n+
CSL
Sub

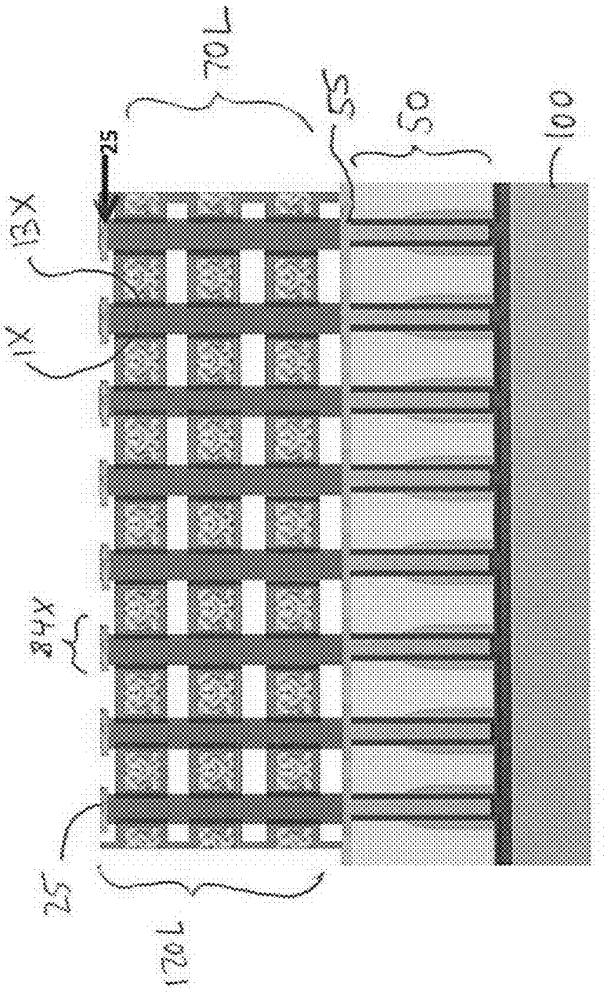

FIG. 16A

FIG. 16B

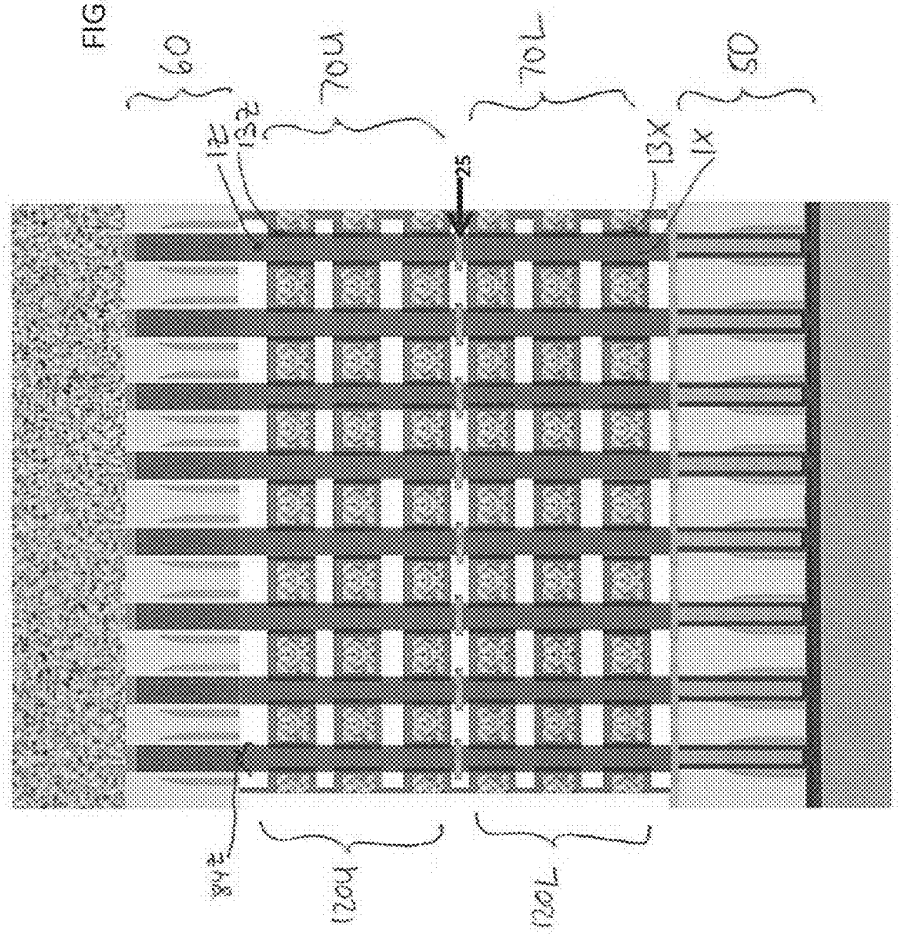

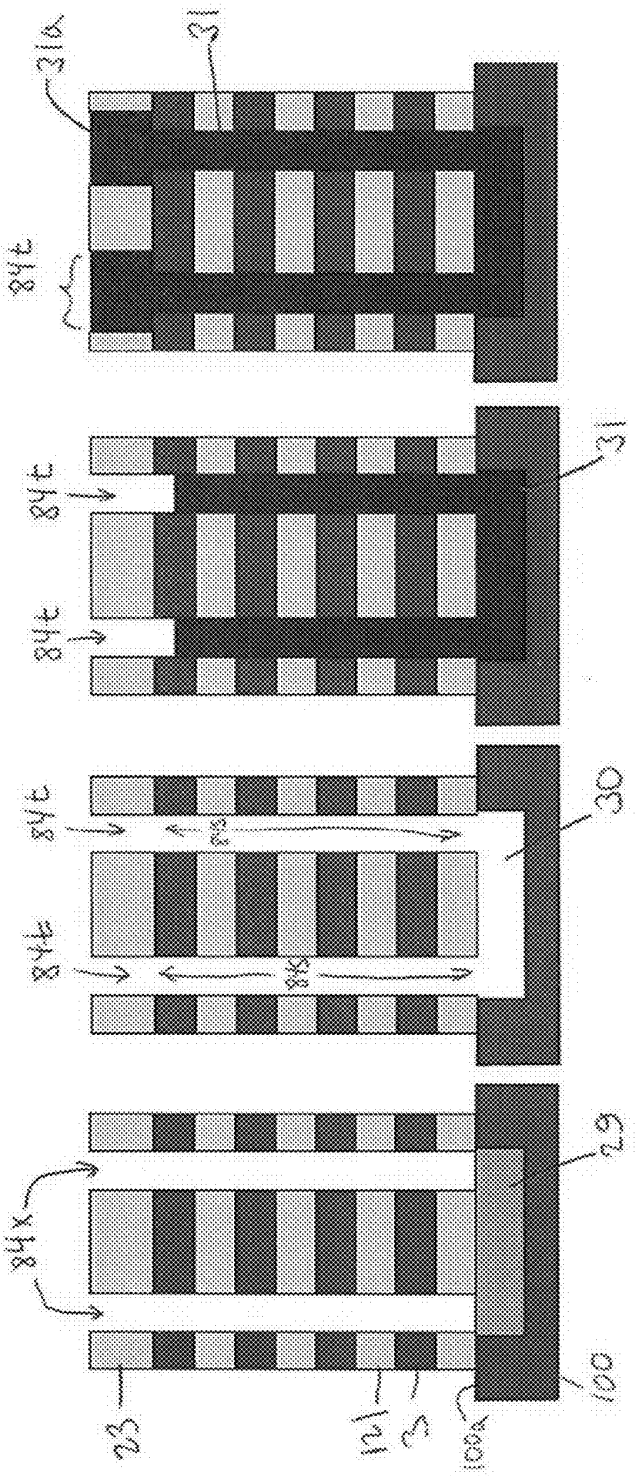

FIG. 17A

FIG. 17B

FIG. 17C

FIG. 17D

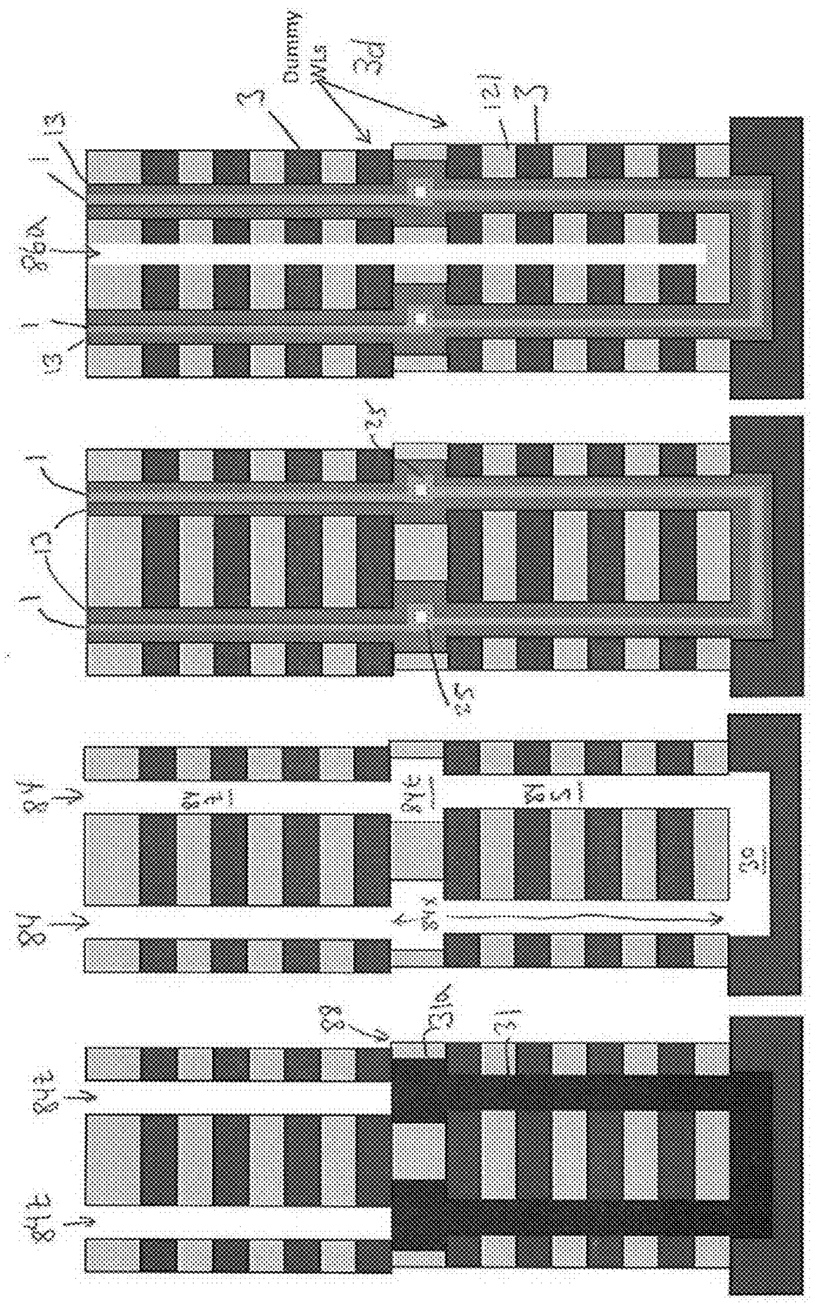

FIG. 17E FIG. 17F FIG. 17G FIG. 17H

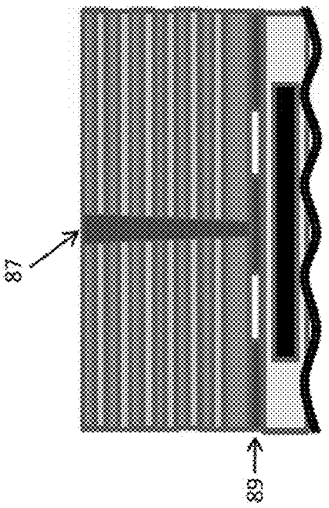

Fig. 18B

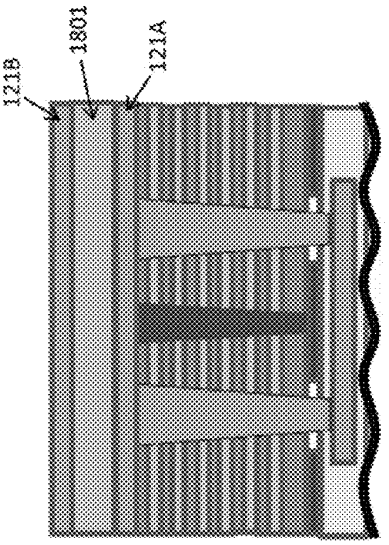

Fig. 18D

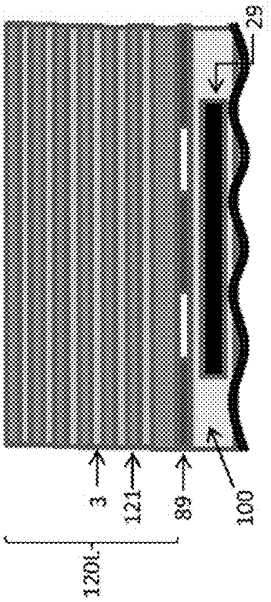

Fig. 18A

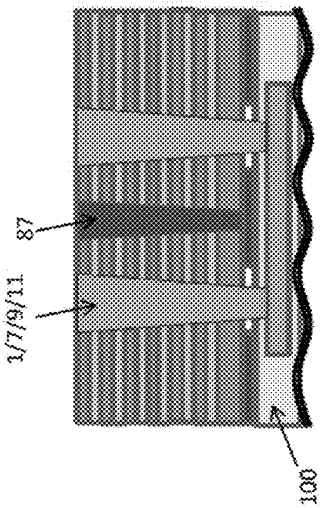

Fig. 18C

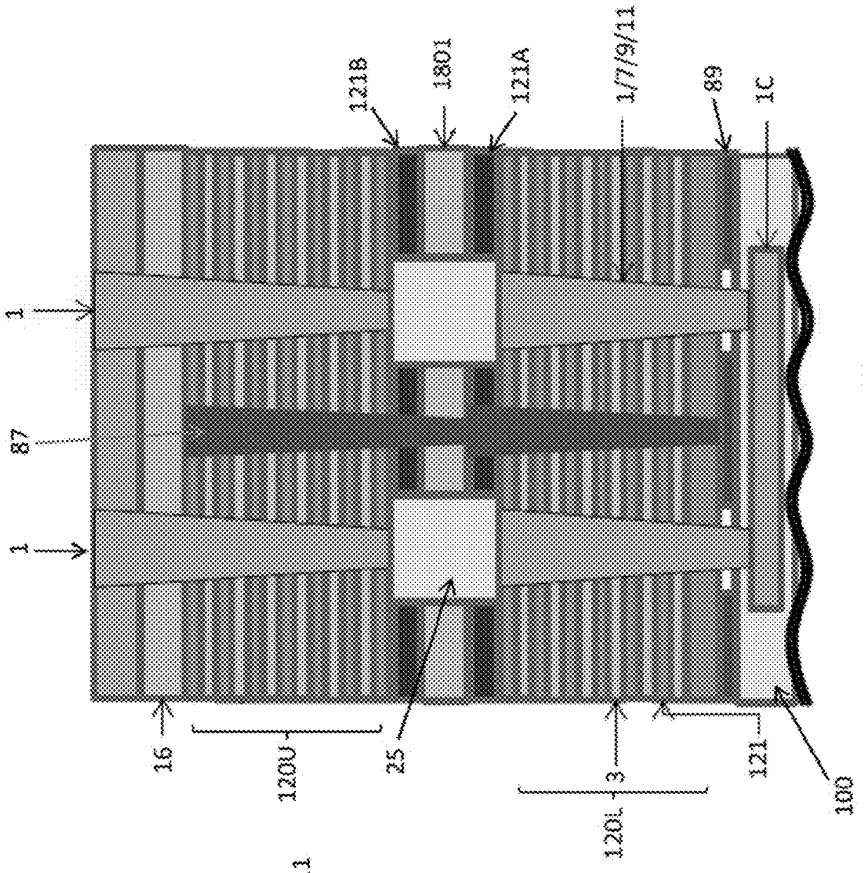

Fig. 18F

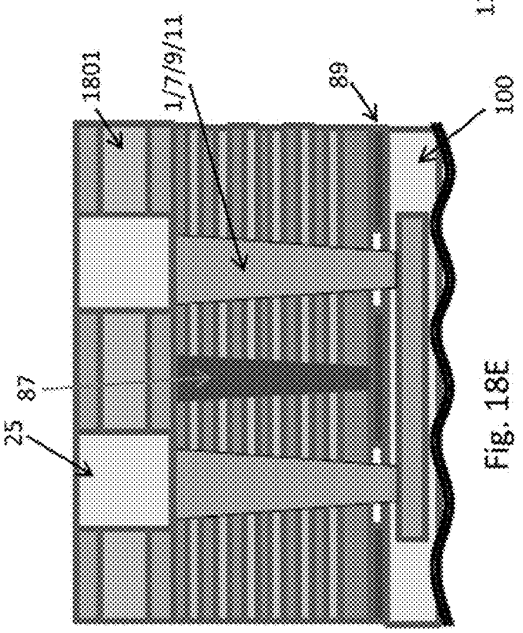

Fig. 18E

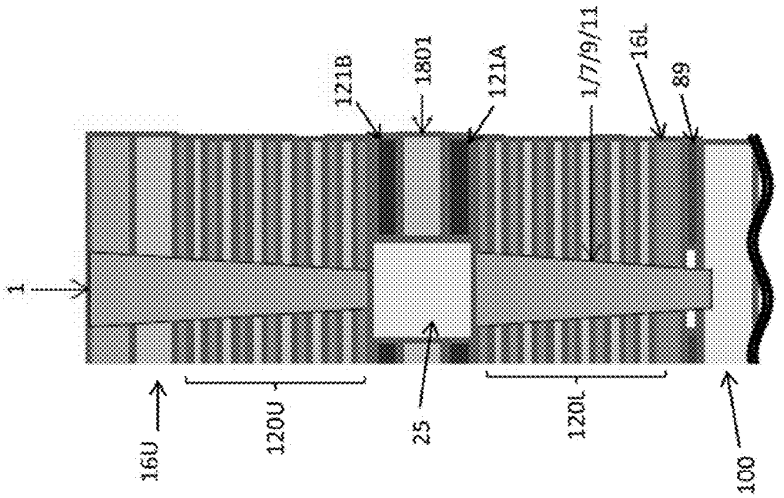

Fig. 18G

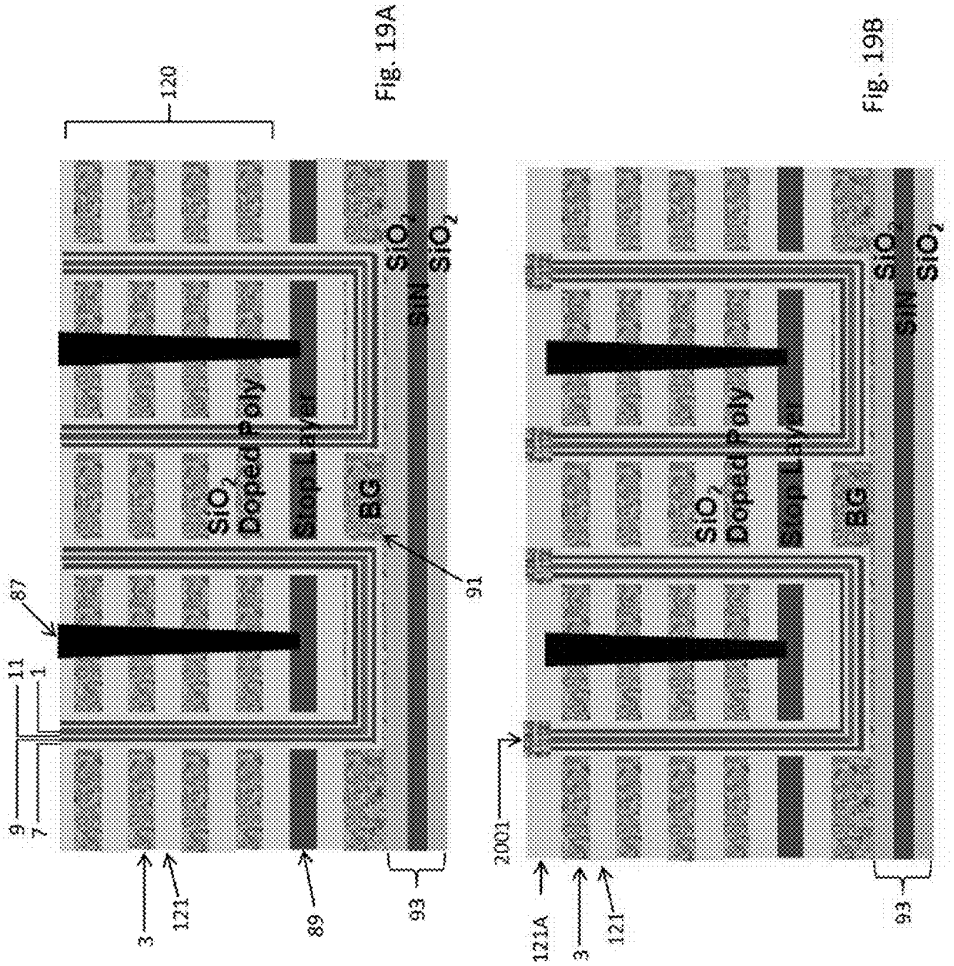

Fig. 19A

Fig. 19B

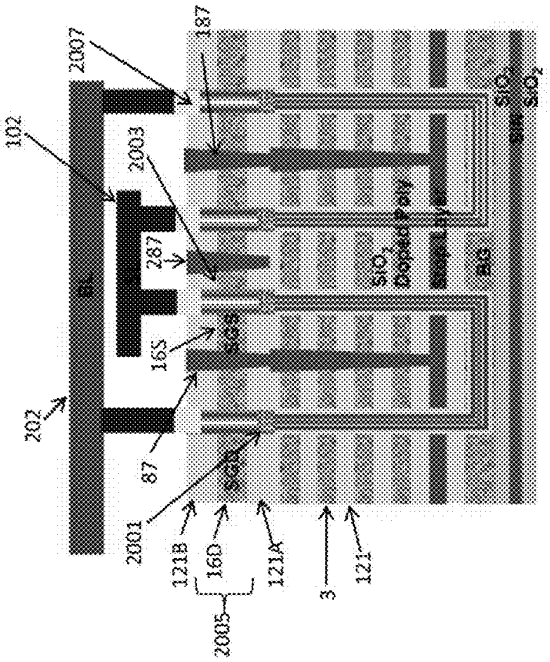

Fig. 19D

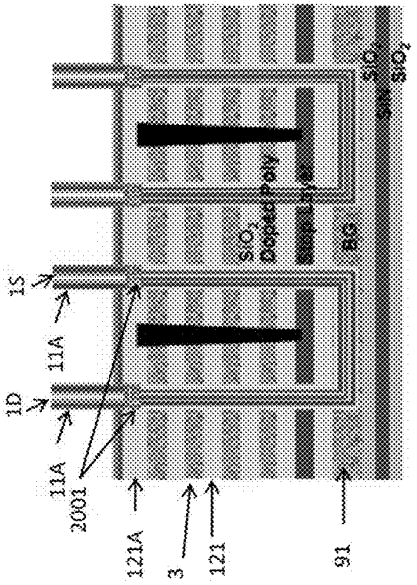

Fig. 19C

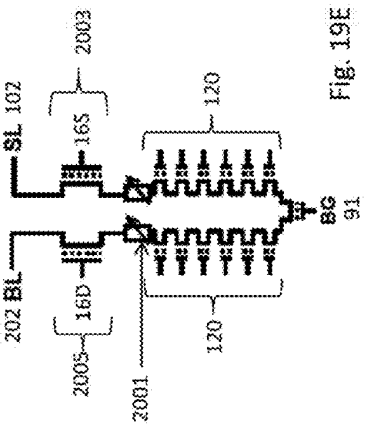

Fig. 19E

Fig. 20B

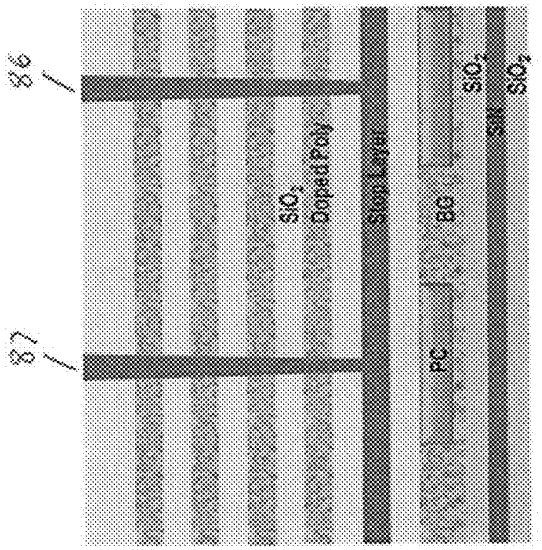

Fig. 20A

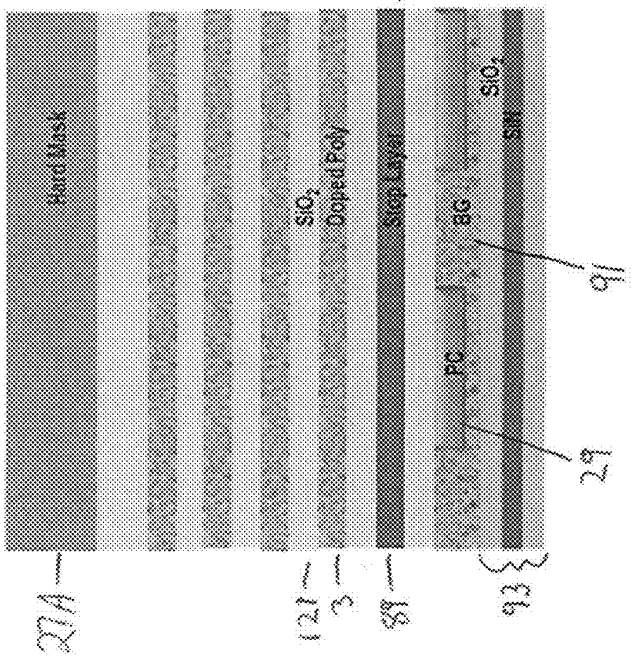

Fig. 20D

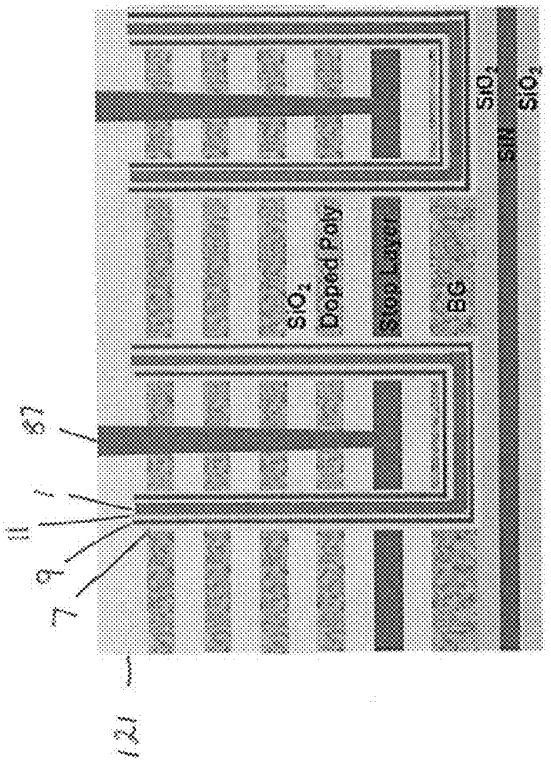

Fig. 20C

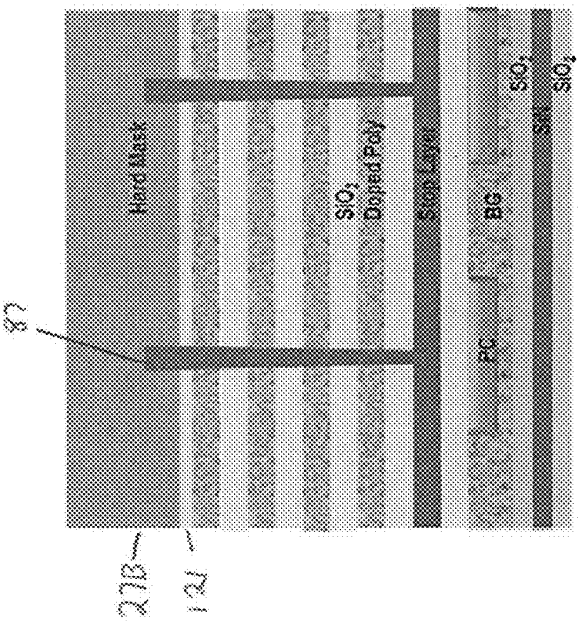

Fig. 20F

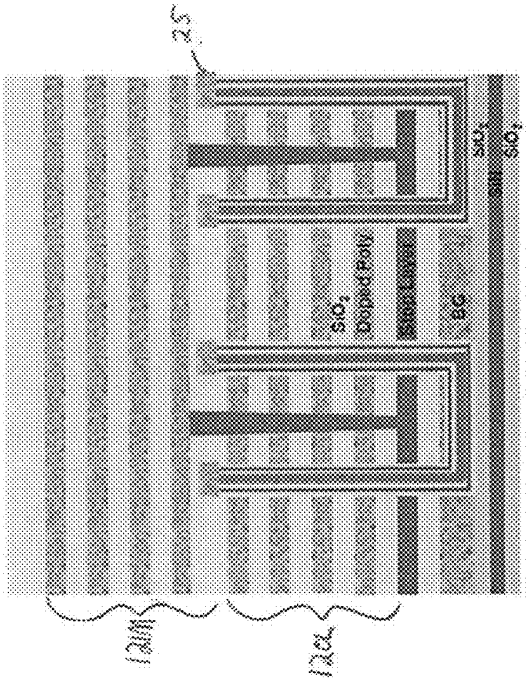

Fig. 20E

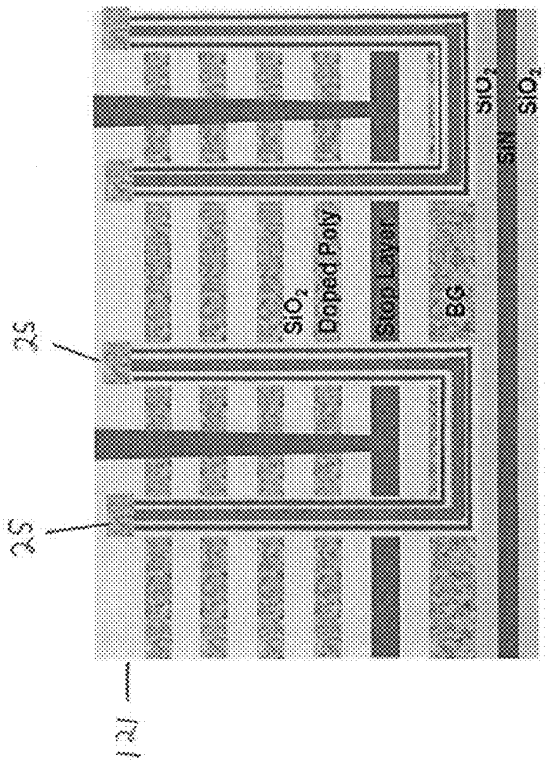

Fig. 20H

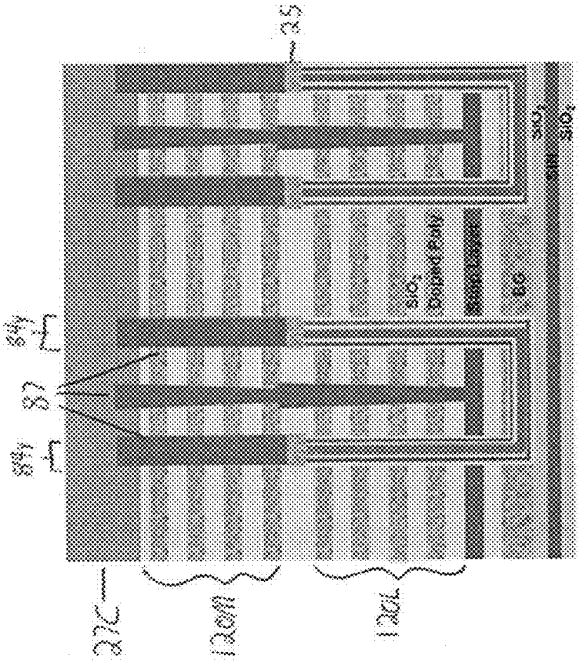

Fig. 20G

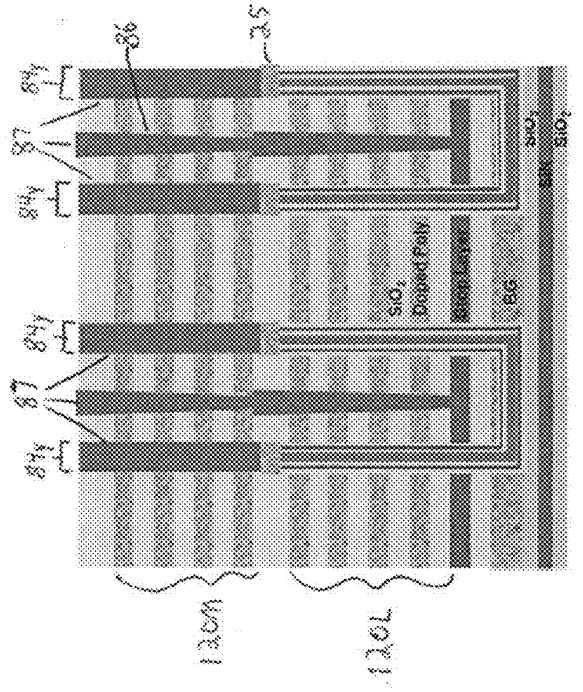

Fig. 20J

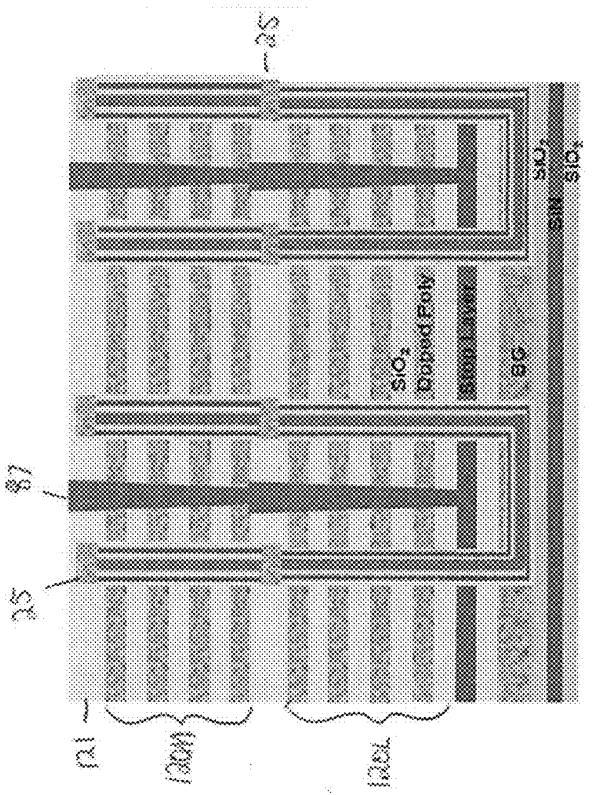

Fig. 20I

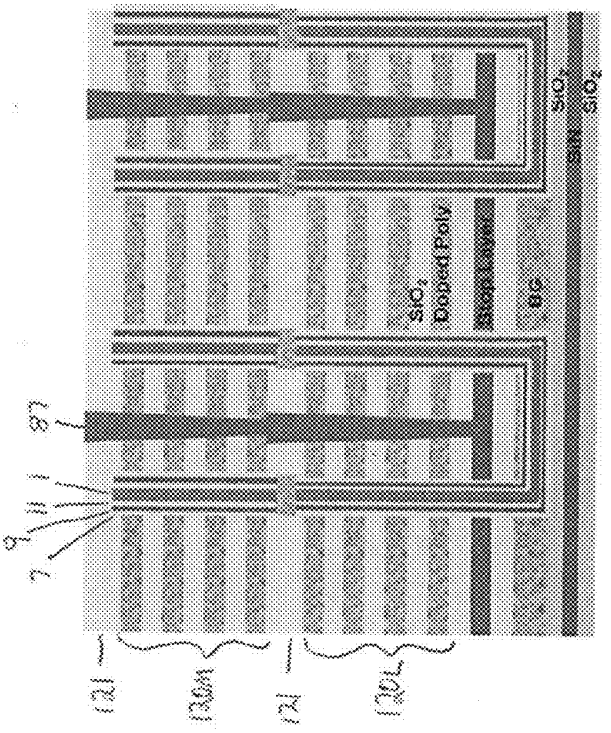

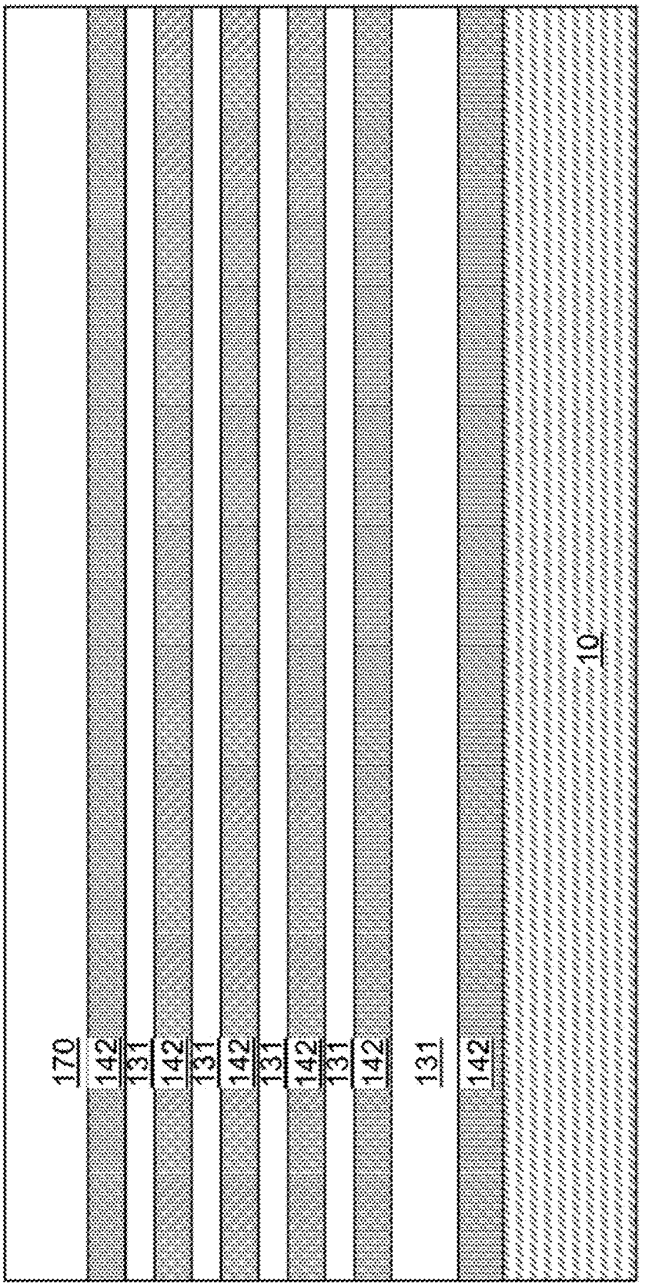

FIG. 21

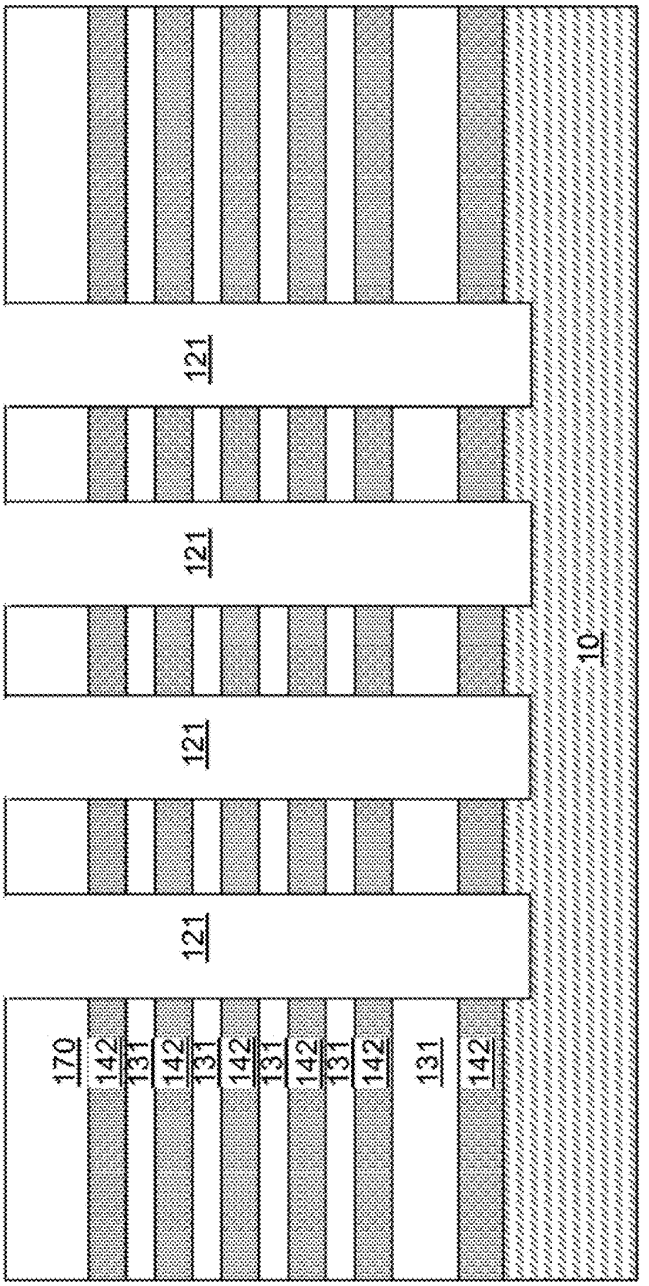
170
142
131
142
131
142
131
142
131
142
131
142
121
121
121
121
10

FIG. 22

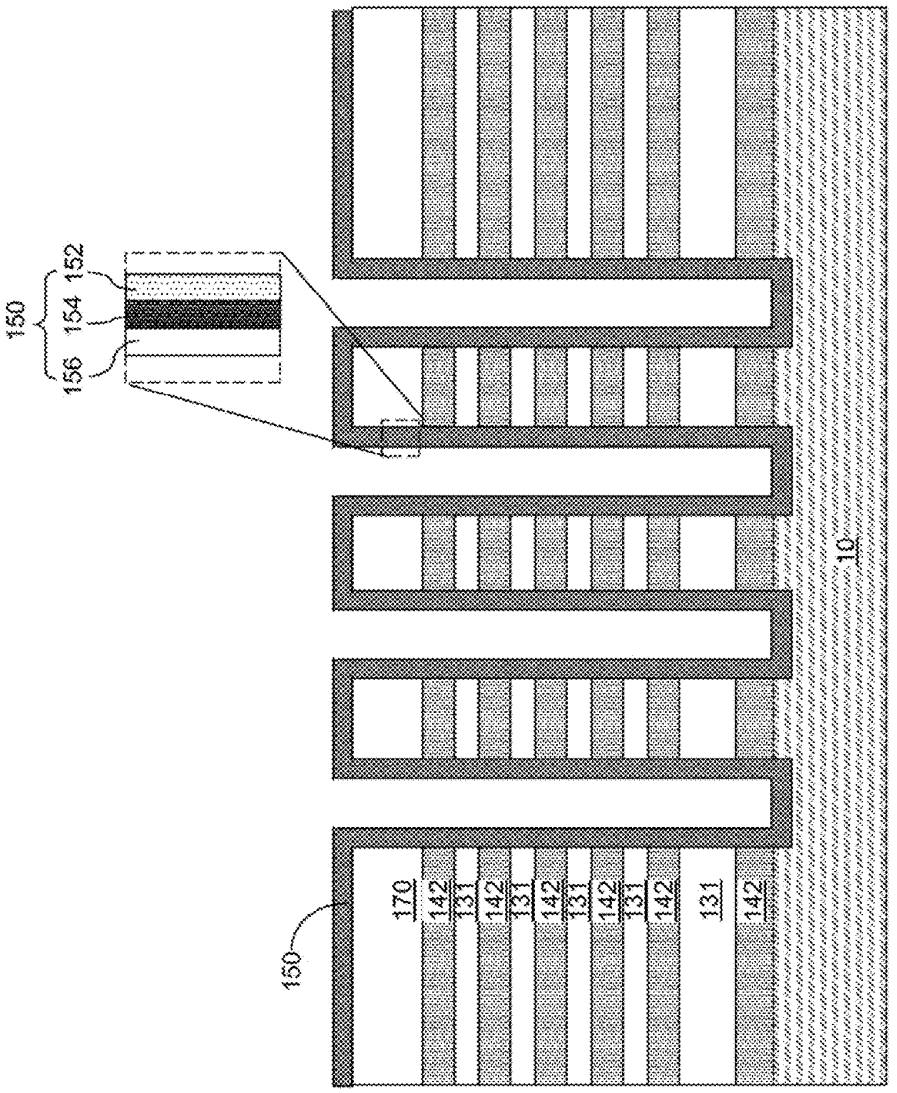
150
152
154
156
150
170
142
131
142
131
142
131
142
131
142
131
142
10

FIG. 23

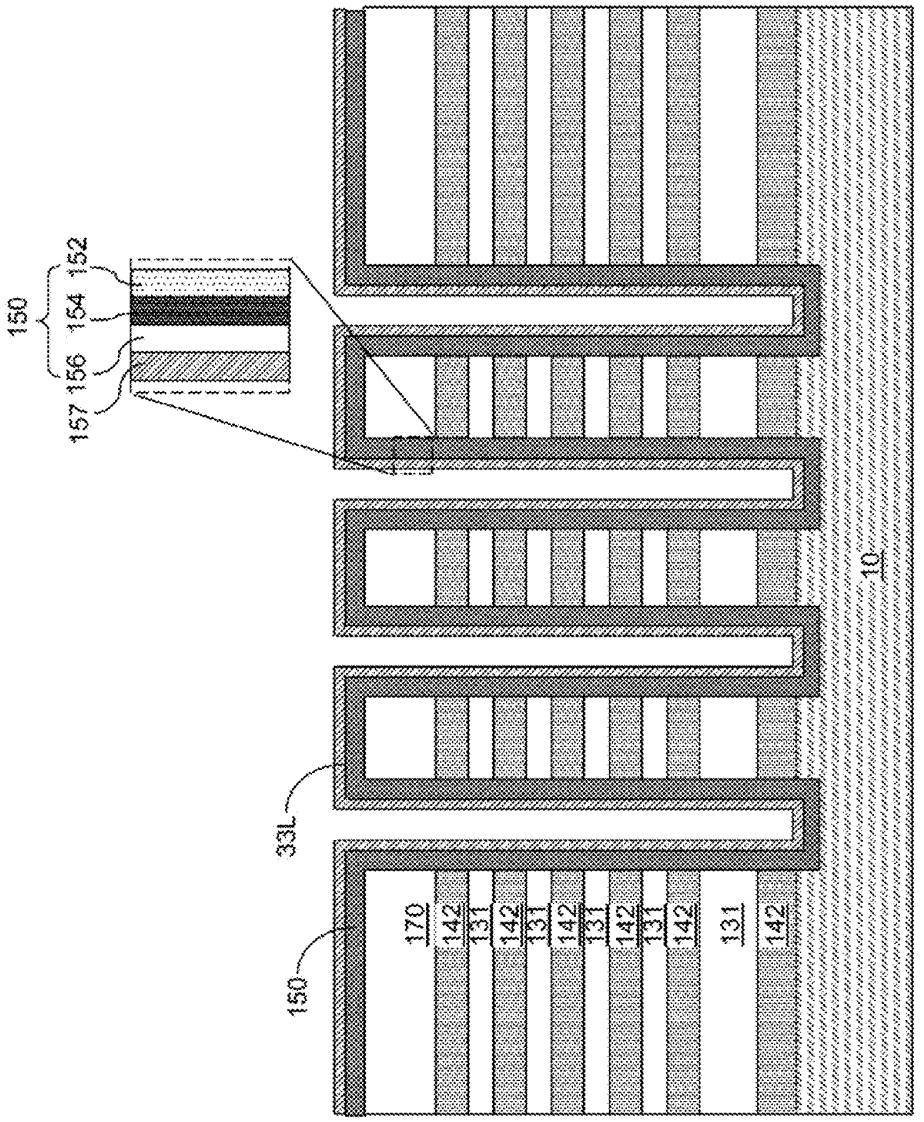
150
152
154
156
157
150
33L
170
142
131
142
131
142
131
142
131
142
131
142
10

FIG. 24

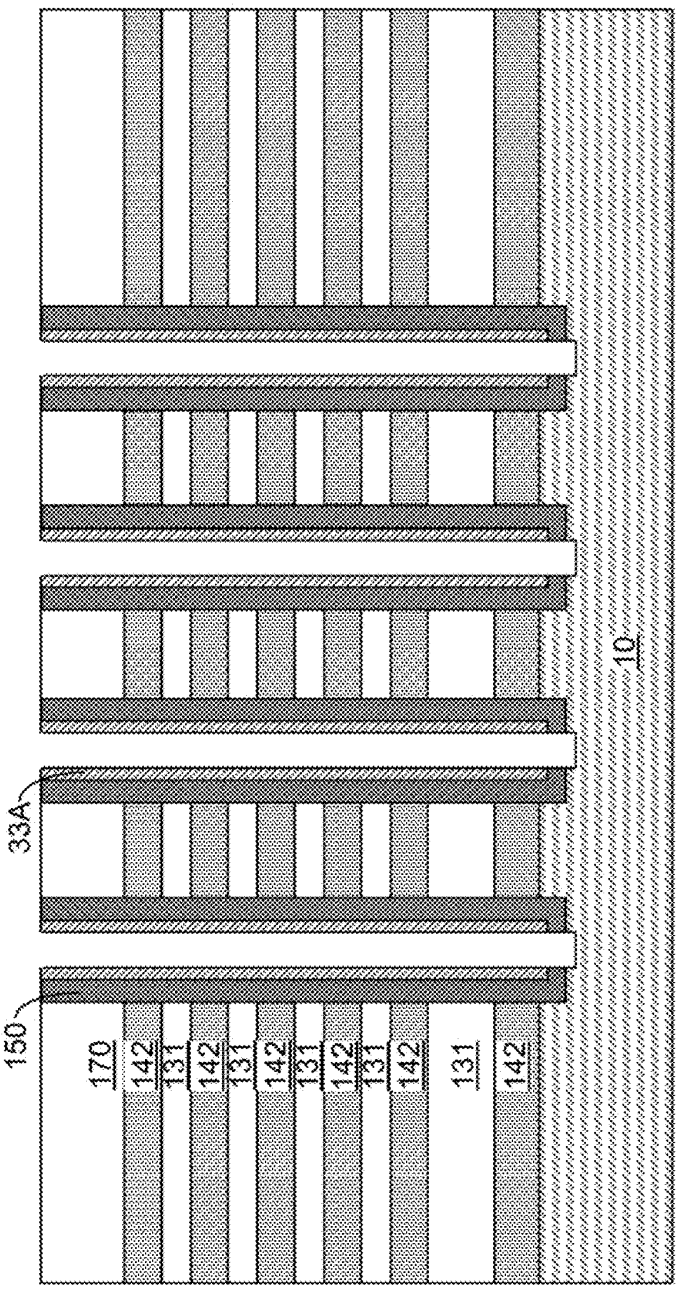

FIG. 25

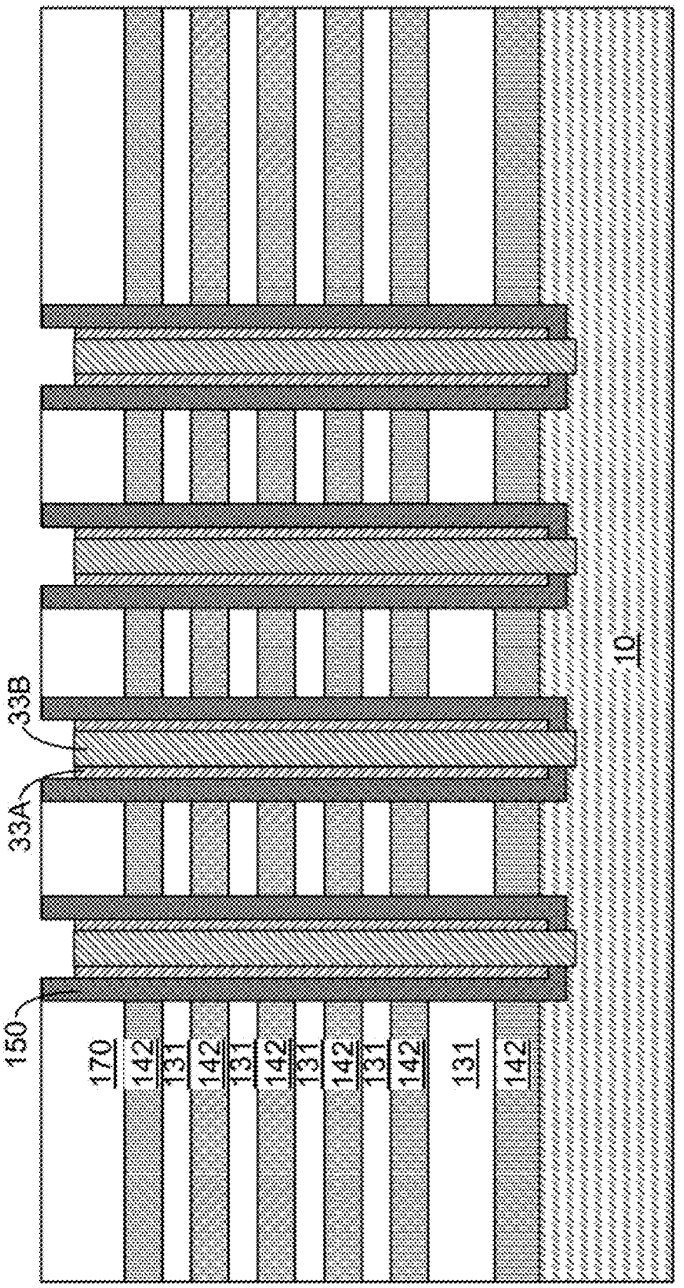

FIG. 26

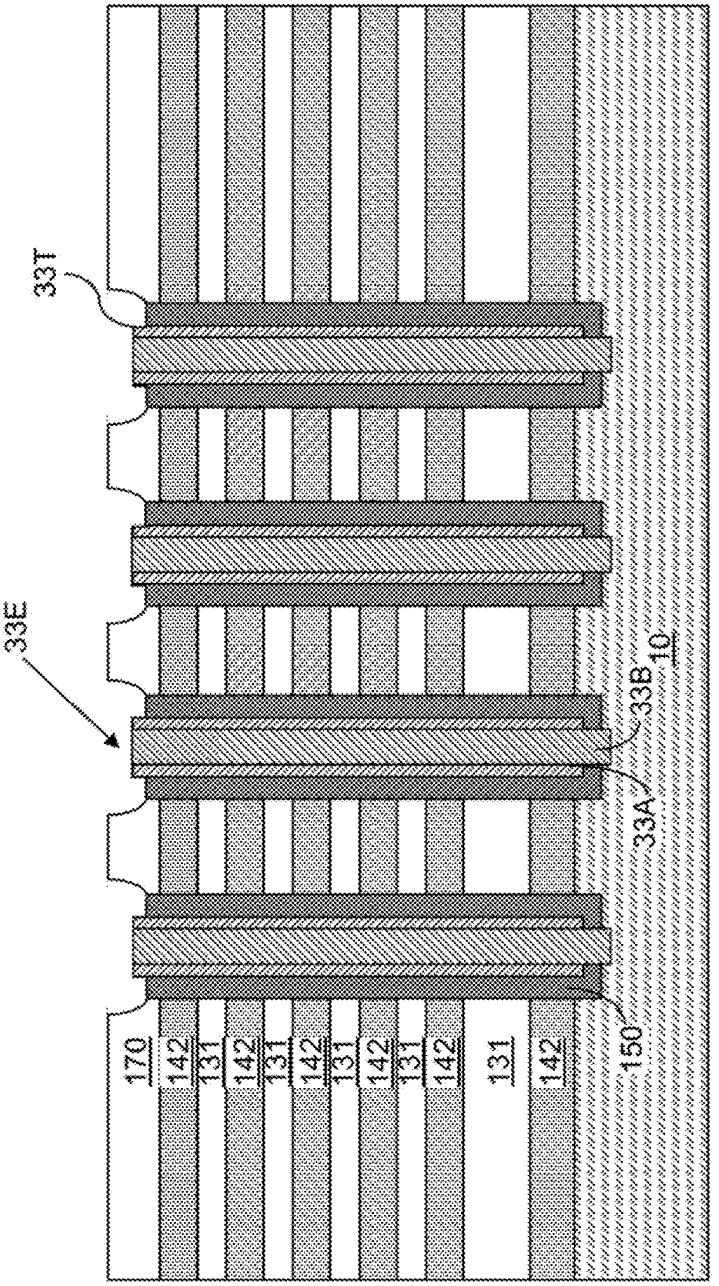
33T
33E
170
142
131
142
131
142
131
142
131
142
131
142
150
33A
33B
10

FIG. 27

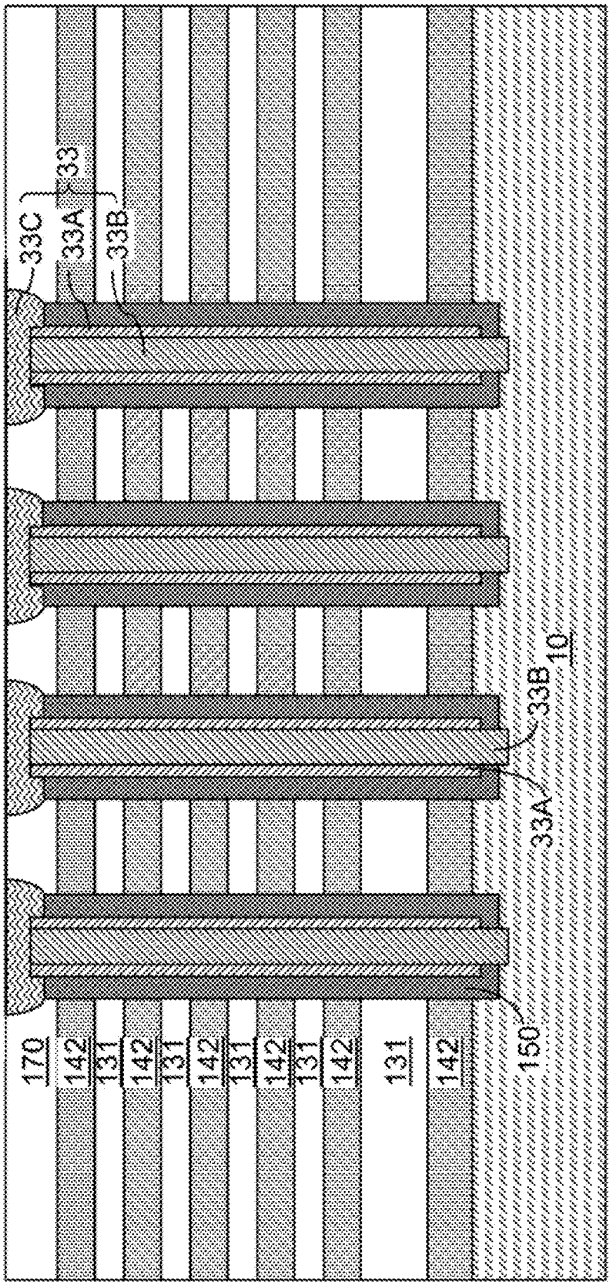
170
142
131
142
131
142
131
142
131
142
131
142
150
33A
33B
33C
33
33A
33B
10

FIG. 28

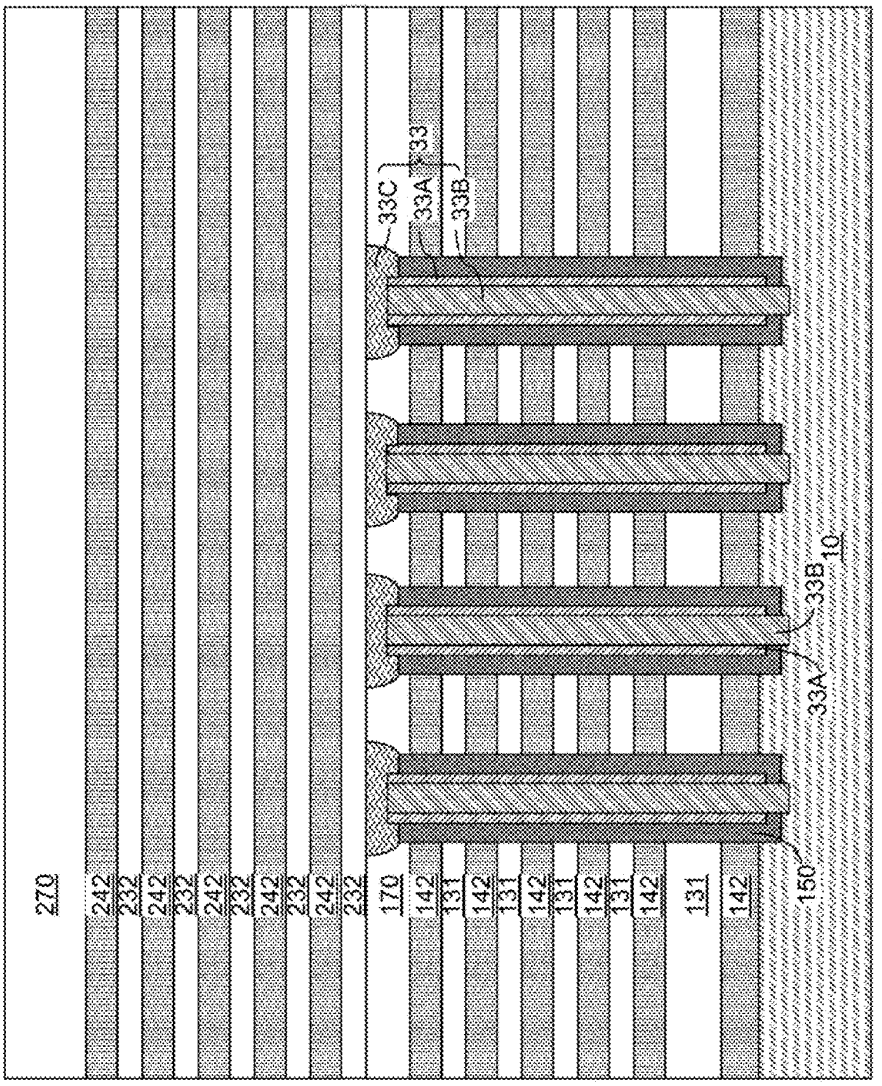

FIG. 29

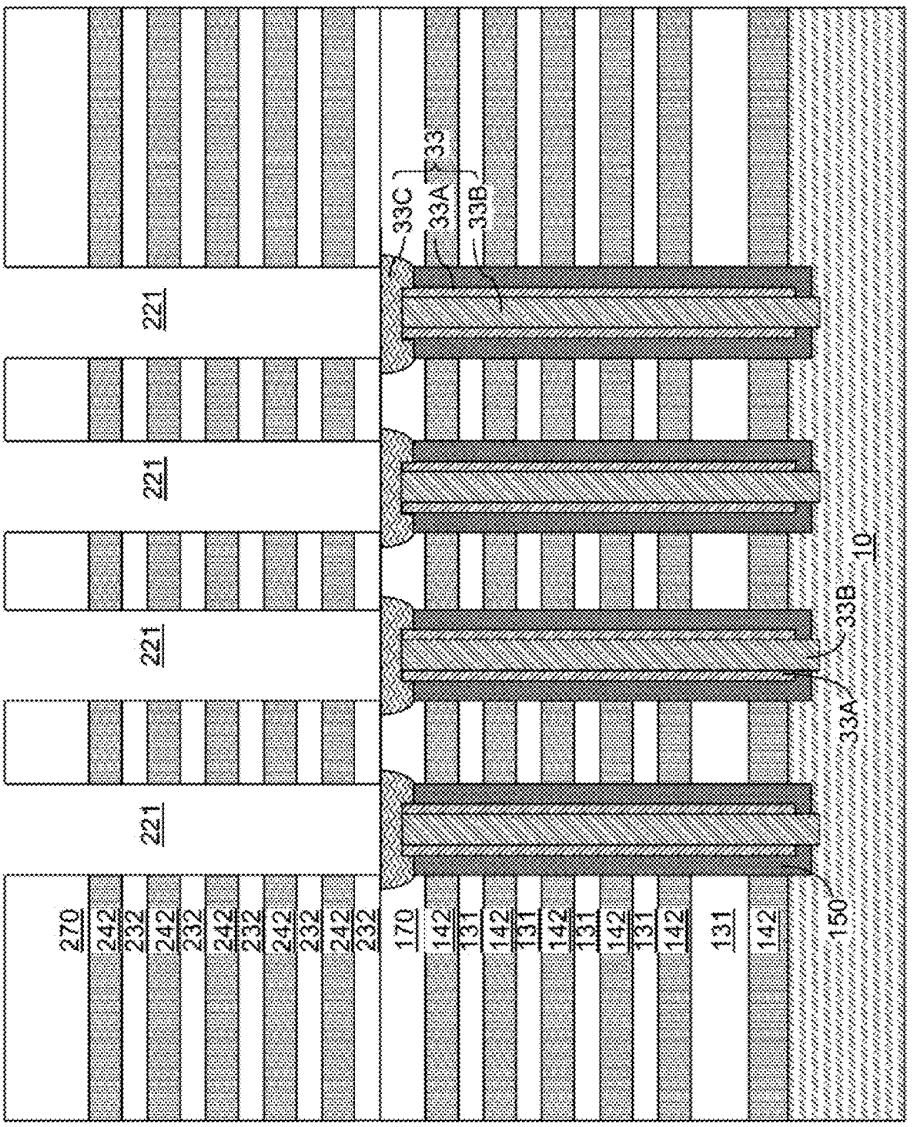
270
242
232
242
232
242
232
242
232
242
232
170
142
131
142
131
142
131
142
131
142
131
142
150
33A
33B
10
221
221
221
221
33C
33A
33
33B

FIG. 30A

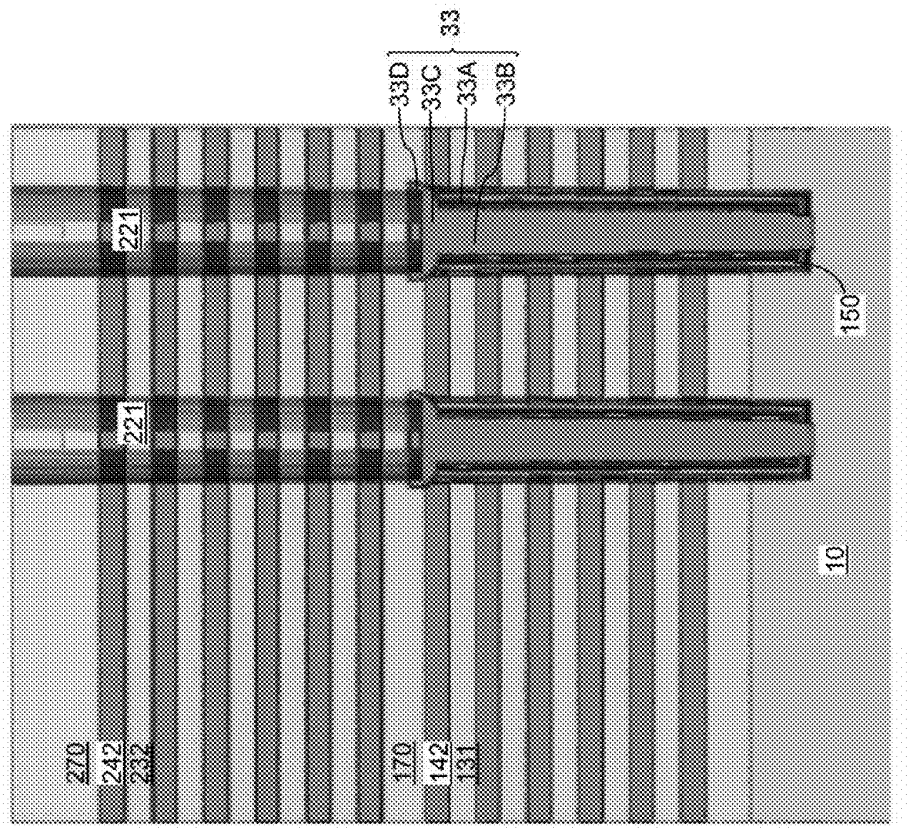

FIG. 30B

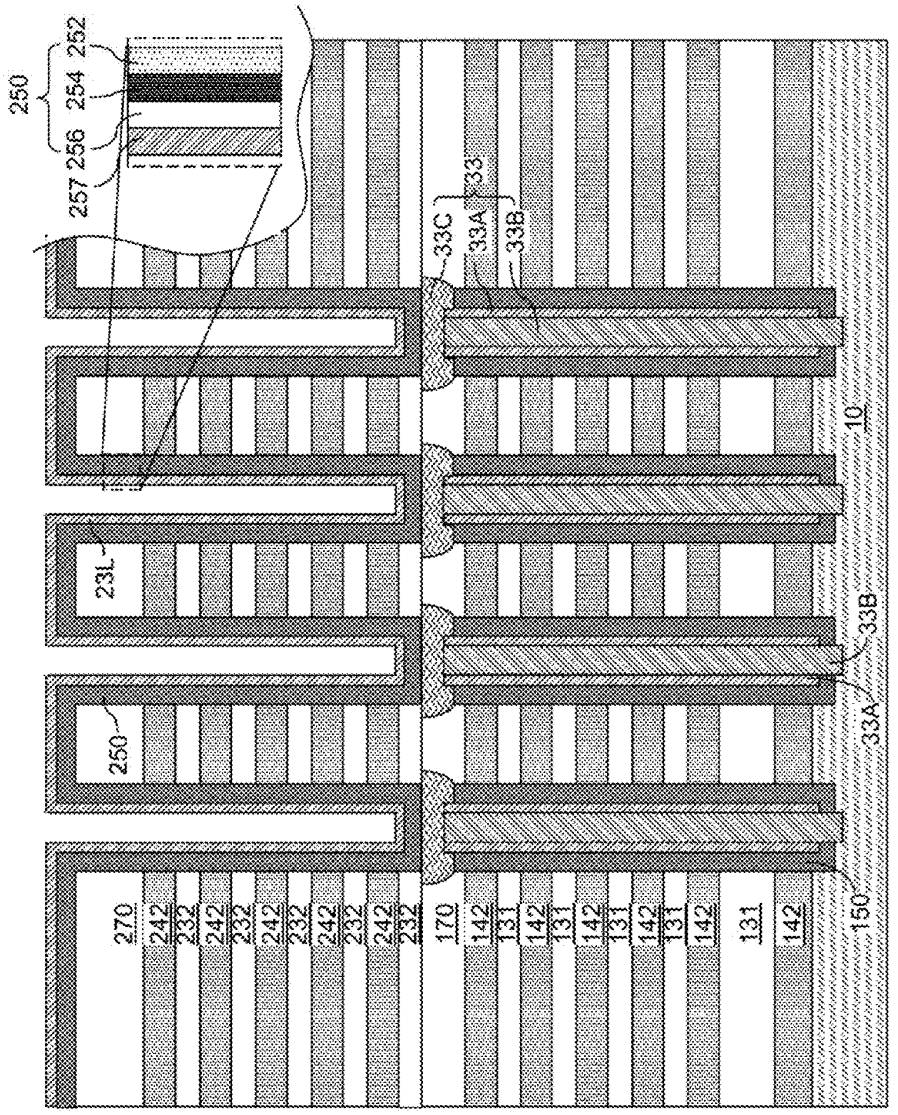
250
252
254
256
257
33
33C
33A
33B
10
23L
250
33B
33A
150
270
242
232
242
232
242
232
242
232
242
232
170
142
131
142
131
142
131
142
131
142
131
142

FIG. 31

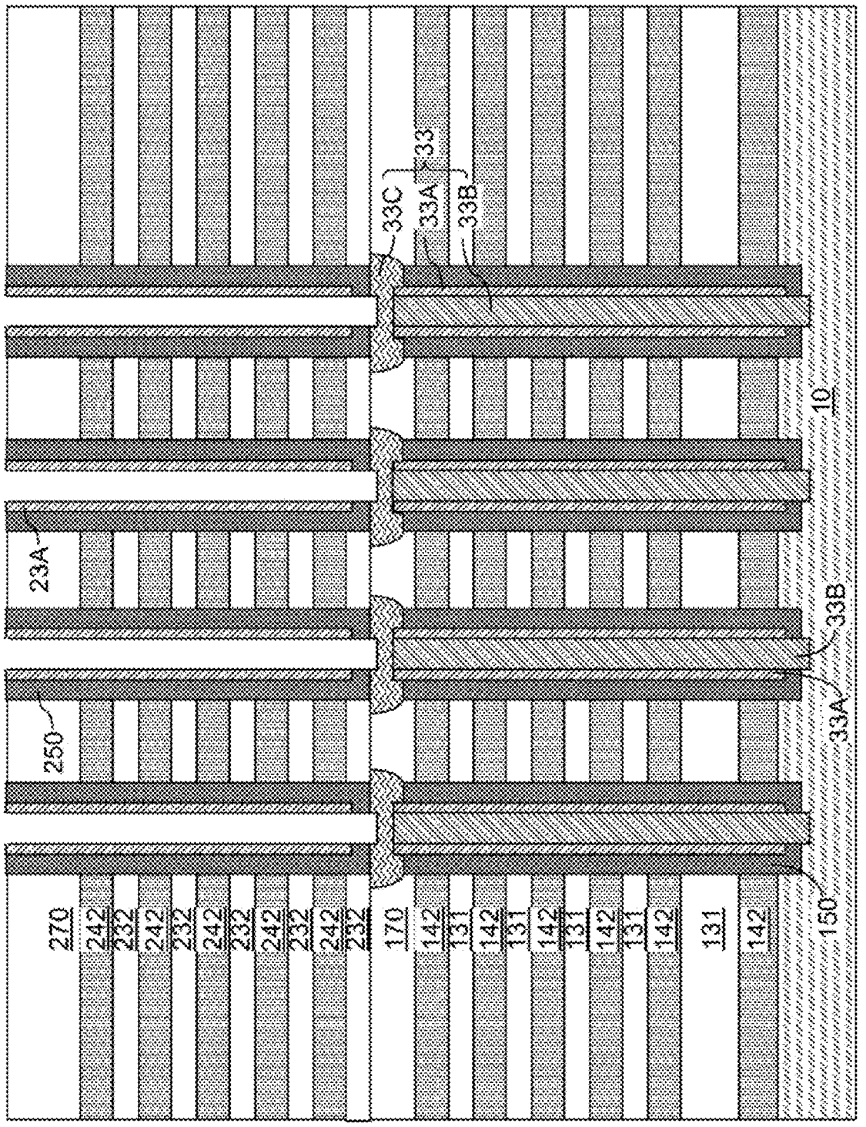
270
242
232
242
232
242
232
242
232
242
232
250
23A
170
142
131
142
131
142
131
142
131
142
131
142
150
33A
33B
33C
33A
33
33B
10

FIG. 32

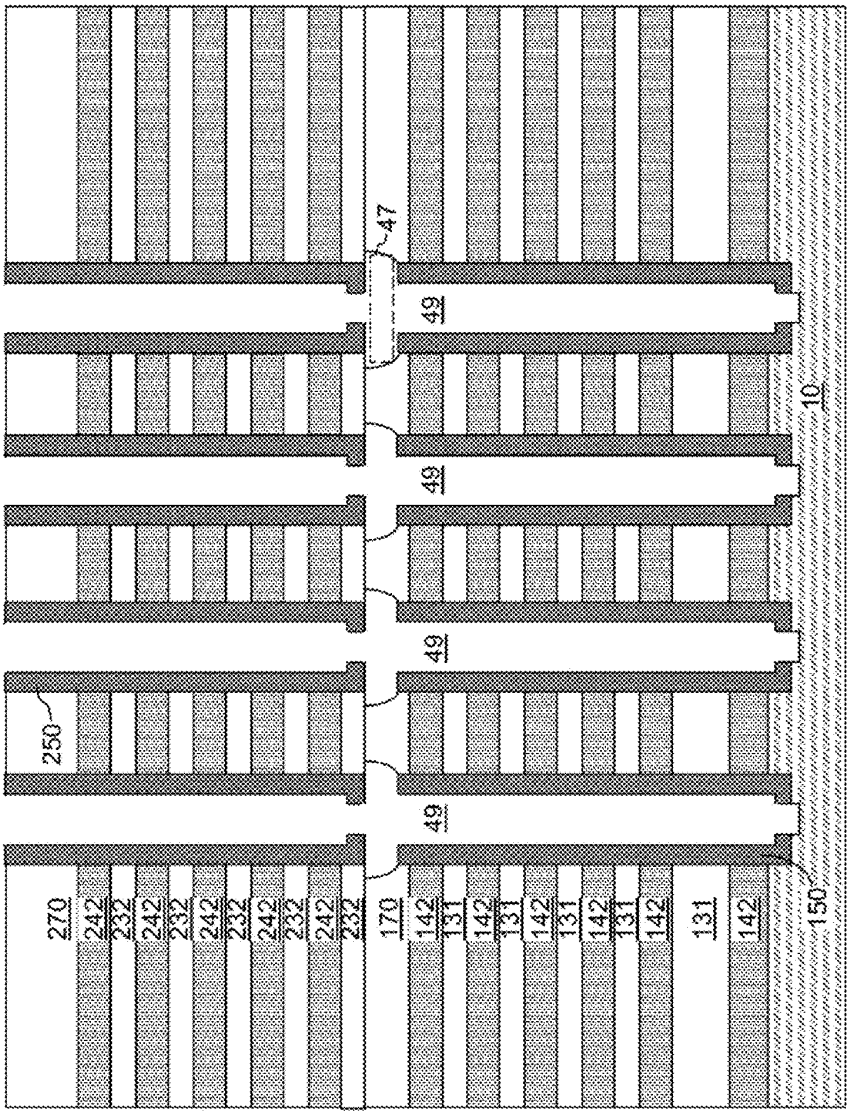
270
242
232
242
232
242
232
242
232
242
232
250
170
142
131
142
131
142
131
142
131
142
131
142
49
49
49
49
47
150
10

FIG. 33

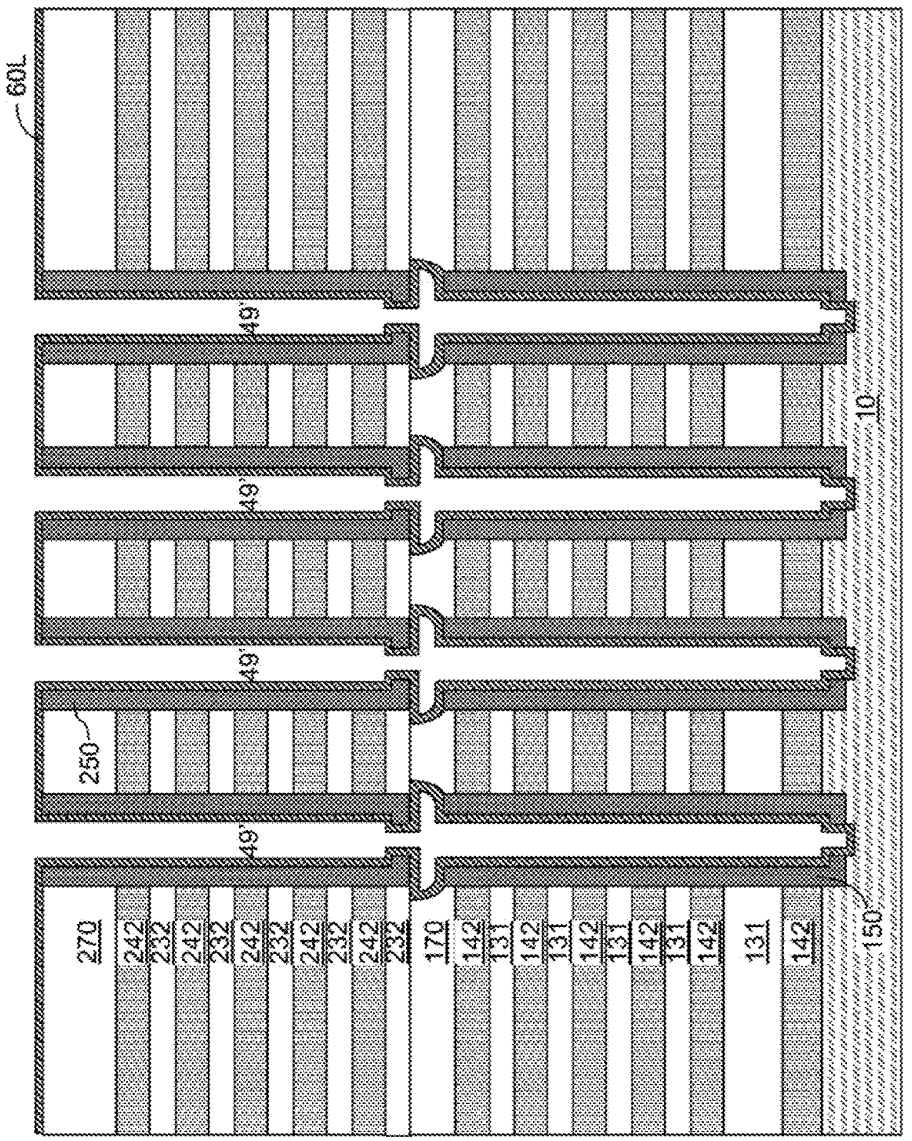
60L
49'
49'
49'
49'
250
49'
270
242
232
242
232
242
232
242
232
242
232
170
142
131
142
131
142
131
142
131
142
131
142
150
10

FIG. 34

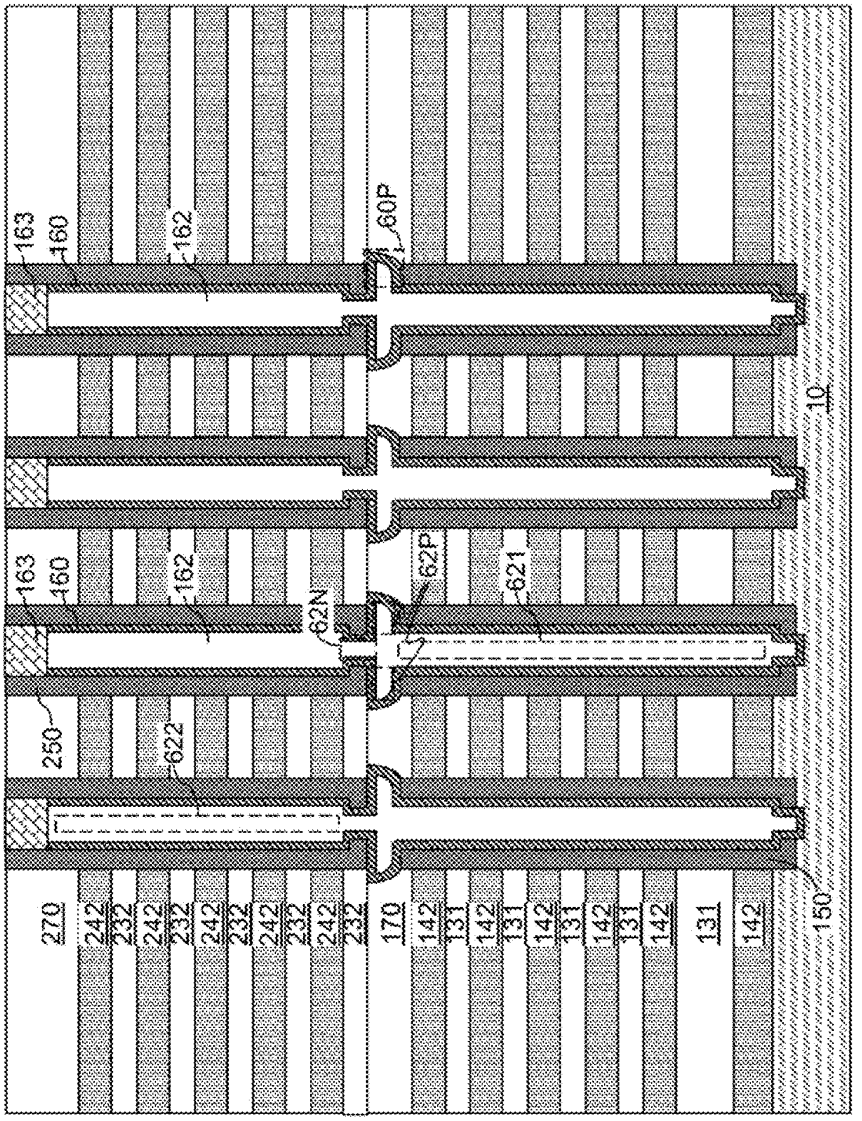
163
160
162
60P
10
163
160
162
62N
62P
621
250
622
270
242
232
170
142
131
150

FIG. 35A

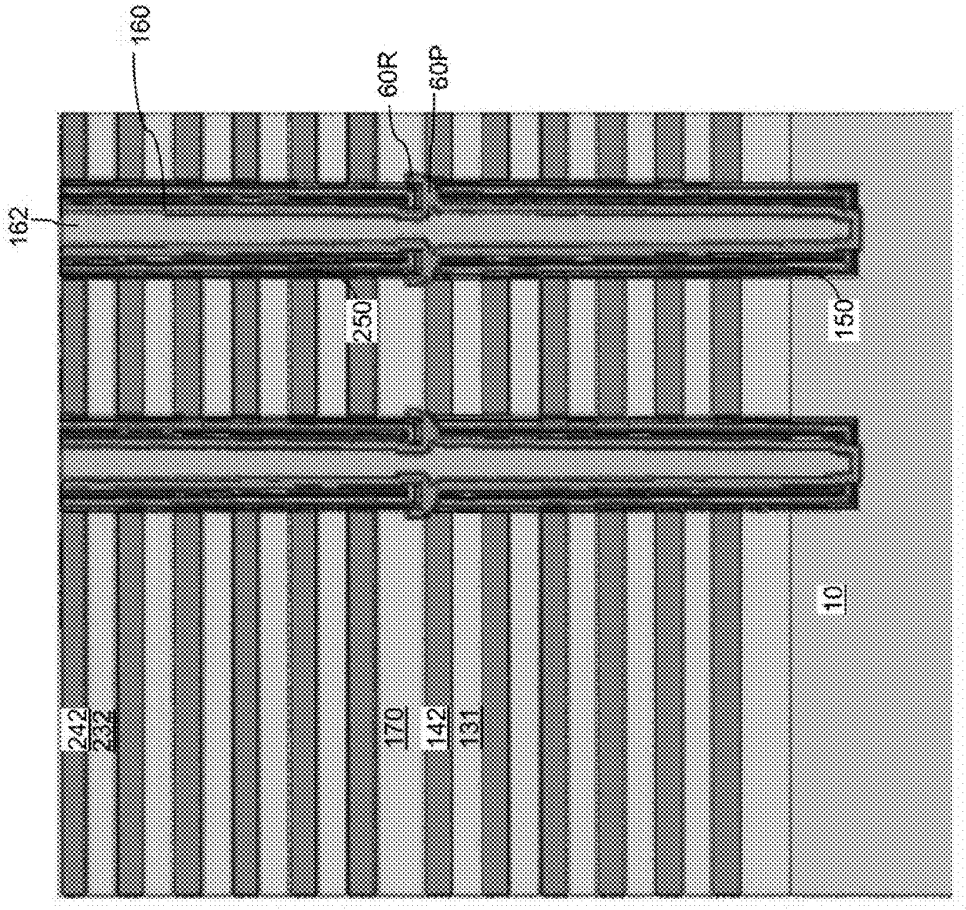

FIG. 35B

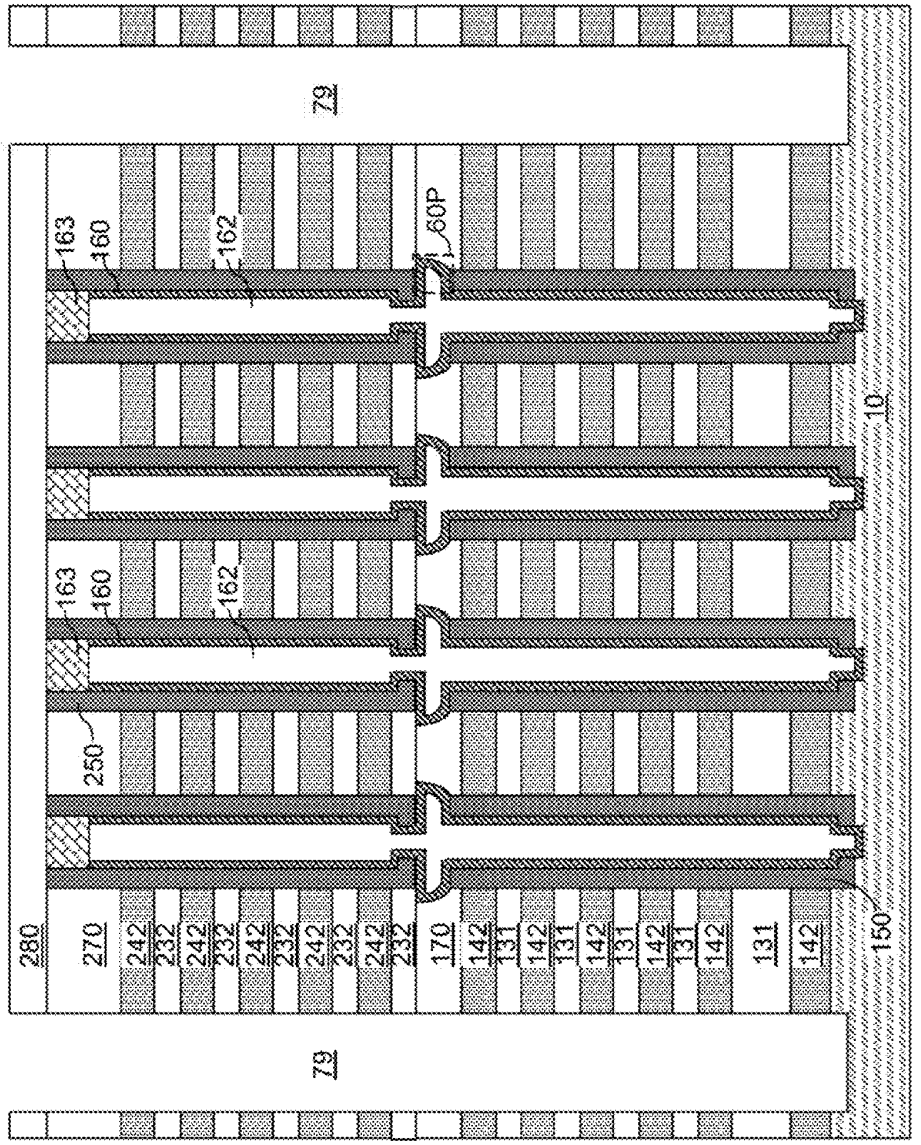
79
163
160
162
60P
10
163
160
162
250
280
270
242
232
170
142
131
150
79

FIG. 36

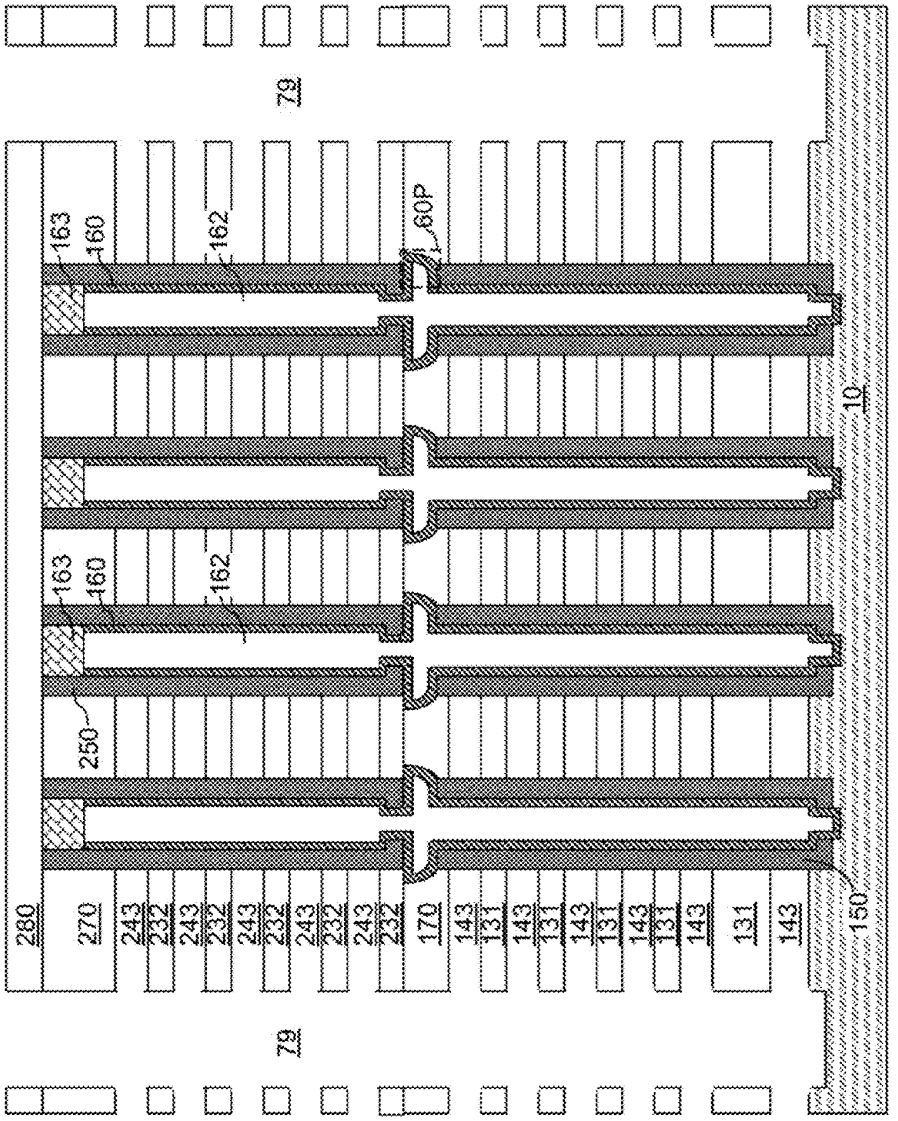
79
163
160
162
60P
10
163
160
162
250
280
270
243
232
243
232
243
232
243
232
243
232
170
143
131
143
131
143
131
143
131
143
131
143
150
79

FIG. 37

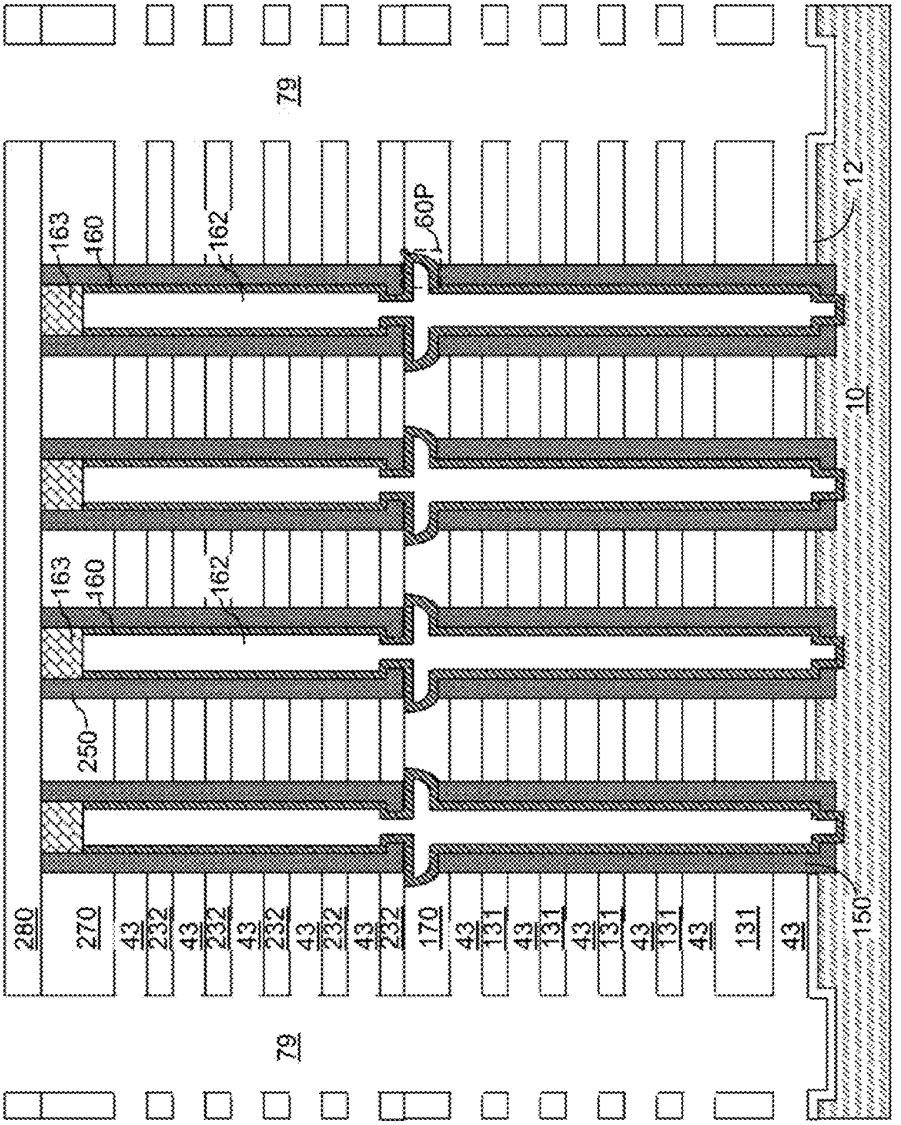
79
163
160
162
60P
12
10
163
160
162
250
280
270
43
232
43
232
43
232
43
232
43
232
170
43
131
43
131
43
131
43
131
43
131
43
150
79

FIG. 38

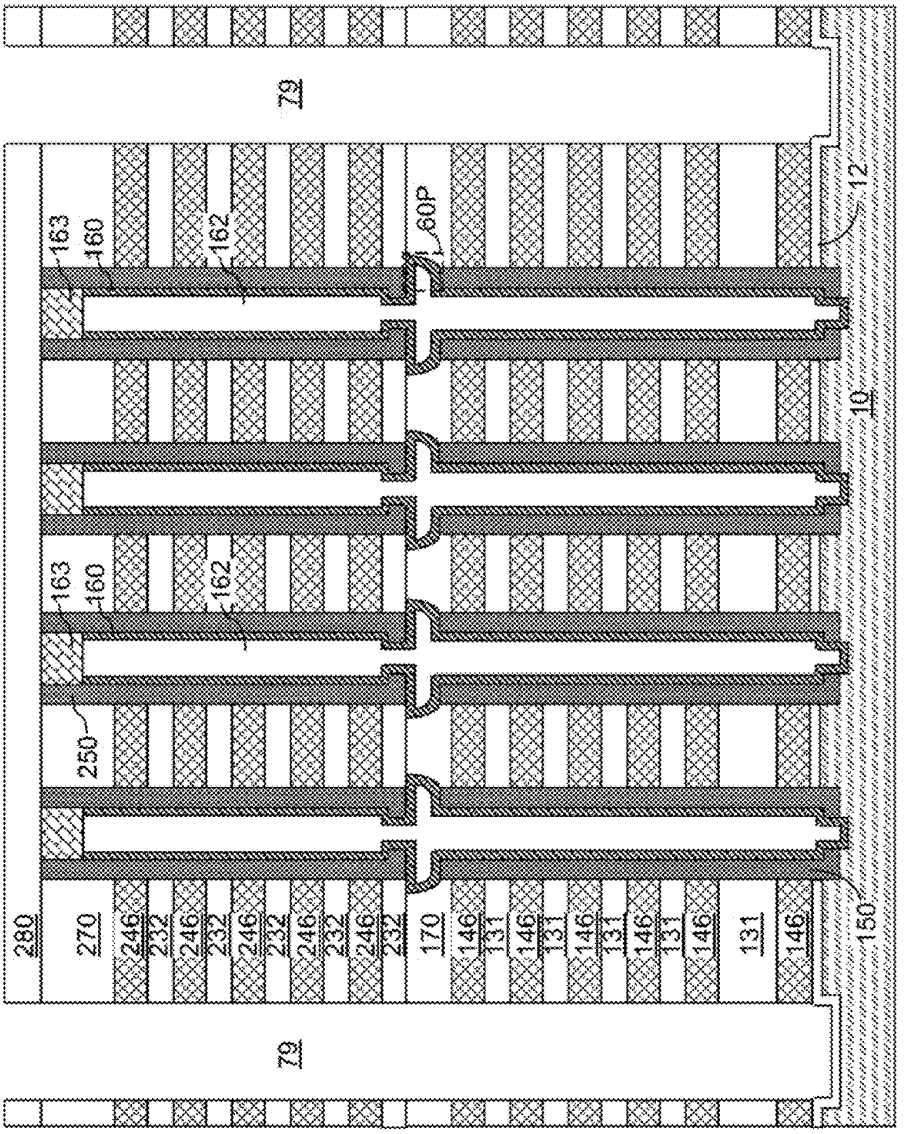
79
163
160
162
60P
12
10
163
160
162
250
280
270
246
232
170
146
131
150
79

FIG. 39

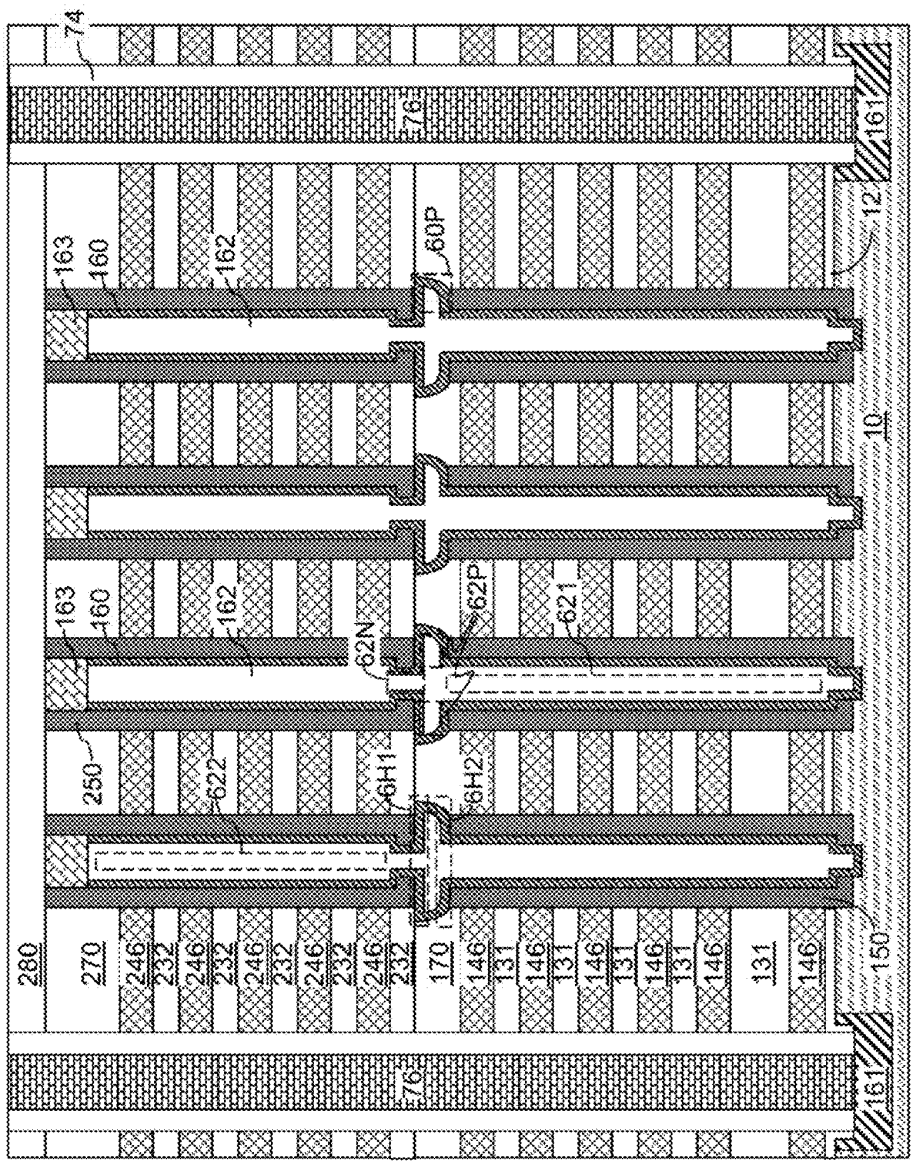
74
76
161
12
163
160
162
60P
10
62P
621
62N
250
622
6H1
6H2
280
270
246
232
170
146
131
150

FIG. 40

VERTICAL NAND AND METHOD OF MAKING THEREOF USING SEQUENTIAL STACK ETCHING AND SELF-ALIGNED LANDING PAD

RELATED APPLICATIONS

[0001] This application is a continuation-in-part application of U.S. patent application Ser. No. 14/207,012 filed on Mar. 12, 2014, which is a continuation of PCT International Application Serial No. PCT/US14/23276 filed in Mar. 11, 2014, which claims benefit of U.S. Provisional Patent Application Ser. No. 61/776,953, filed on Mar. 12, 2013, and this application is a continuation-in-part application of U.S. patent application Ser. No. 14/611,785 filed on Feb. 2, 2015, the entire contents of all of the above applications is incorporated herein by reference in their entirety.

FIELD

[0002] The present disclosure relates generally to the field of semiconductor devices and specifically to three dimensional vertical NAND strings and other three dimensional devices and methods of making thereof.

BACKGROUND

[0003] Examples of prior art three dimensional vertical NAND strings are illustrated in FIGS. **1**A and **1**B. The device shown in FIG. **1**A is known in the art as terabit cell array transistor ("TCAT") array. It includes damascened metal gate SONOS type cells in the vertical NAND flash string formed by a gate replacement process (see Jang, et al., "Vertical cell array using TCAT (Terabit Cell Array Transistor) technology for ultra high density NAND flash memory," 2009 Symposium on VLSI Technology Digest of Technical Papers, pages 192-193, Jun. 16 2009, Honolulu, Hi., incorporated herein by reference in its entirety).

[0004] The device shown in FIG. **1**B is known in the art as Pipe-shaped Bit Cost Scalable ("P-BiCS") flash memory (see Katsumata, et al., "Pipe-shaped BiCS Flash Memory with 16 Stacked Layers and Multi-Level-Cell Operation for Ultra High Density Storage Devices," 2009 Symposium on VLSI Technology Digest of Technical Papers, pages 136-137, Jun. 16 2009, Honolulu, Hi., incorporated herein by reference in its entirety).

SUMMARY

[0005] According to an aspect of the present disclosure, a monolithic three-dimensional memory device is provided, which comprises: a first tier structure located over a top surface of a substrate and comprising a first alternating stack of first insulating layers and first electrically conductive layers; an insulating cap layer overlying the first tier structure; a second tier structure located over the insulating cap layer and comprising a second alternating stack of second insulating layers and second electrically conductive layers; and a memory stack structure comprising a first memory film located within the first tier structure, a second memory film located within the second tier structure, and a semiconductor channel that extends through the second tier structure, the insulating cap layer, and the first tier structure, wherein the semiconductor channel contacts the insulating cap layer.

[0006] According to another aspect of the present disclosure, a method of forming a monolithic three-dimensional memory device comprises forming a first memory opening through a first stack of first insulating layers and second layers and through an insulating cap layer located over the first stack, forming a first sacrificial material in a bottom part of the first memory opening, widening a top part of the first memory opening such that it has a larger width than the bottom part of the first memory opening, forming a second sacrificial material in the top part of the first memory opening, forming a second stack of second insulating layers and third layers over the insulating cap layer, forming a second memory opening through the second alternating stack, removing the first and second sacrificial material from the first memory opening through the second memory opening, and forming a semiconductor channel which extends through the bottom part of the first memory opening, the top part of the first memory opening and the second memory opening.

[0007] In one embodiment, the step of forming the first memory opening through the first stack of first insulating layers and second layers and through the insulating cap layer located over the first stack comprises forming the first memory opening through a first alternating stack of first insulating layers and first spacer material layers and through the insulating cap layer. In one embodiment, the step of forming the first sacrificial material in the bottom part of the first memory opening comprises forming a sacrificial pillar structure. In one embodiment, the step of widening the top part of the first memory opening such that it has the larger width than the bottom part of the first memory opening comprises forming a recess cavity laterally protruding farther than a sidewall of the first memory opening at an upper portion of the first memory opening. In one embodiment, the step of forming the second sacrificial material in the top part of the first memory opening comprises forming a temporary landing pad by filling the recess cavity with a disposable fill material. In one embodiment, the step of forming the second stack of second insulating layers and third layers over the insulating cap layer comprises forming a second alternating stack of second insulating layers and second spacer material layers over the insulating cap layer. In one embodiment, the step of removing the first and second sacrificial material from the first memory opening through the second memory opening comprises removing the sacrificial pillar structure and the temporary landing pad from underneath the second memory opening to form a laterally protruding cavity. In one embodiment, the step of forming the semiconductor channel which extends through the bottom part of the first memory opening, the top part of the first memory opening and the second memory opening comprises forming the semiconductor channel in the first memory opening, the laterally protruding cavity, and the second memory opening.

[0008] According to another aspect of the present disclosure, a method of forming a monolithic three-dimensional memory device, comprises forming a first memory opening through a first alternating stack of first insulating layers and first spacer material layers and through an insulating cap layer, forming a first memory film in the first memory opening, forming a recess cavity laterally protruding farther than a sidewall of the first memory opening at an upper portion of the first memory opening, forming a temporary landing pad by filling the recess cavity with a disposable fill material, forming a second alternating stack of second insulating layers and second spacer material layers over the insulating cap layer, forming a second memory opening through the second alternating stack, forming a second memory film in the second memory opening prior to removing the temporary landing

pad, removing the temporary landing pad from underneath the second memory opening to form a laterally protruding cavity, and forming a semiconductor channel in the first memory opening, the laterally protruding cavity, and the second memory opening.

[0009] According to another aspect of the present disclosure, a method of forming a monolithic three-dimensional memory device, comprises forming a first memory opening through a first stack of first insulating layers and second layers and through an insulating cap layer located over the first stack, forming a first memory film in the first memory opening, filling the first memory opening, forming a second stack of second insulating layers and third layers over the insulating cap layer after forming the first memory film in the first memory opening, forming a second memory opening through the second stack to expose the first memory opening, forming a second memory film in the second memory opening, and forming a semiconductor channel in the second memory opening.

BRIEF DESCRIPTION OF THE DRAWINGS

[0010] FIG. **1**A is a side cross sectional views of a prior art NAND memory device. FIG. **1**B is a perspective cross sectional view of another prior art NAND memory device.

[0011] FIGS. **2**A, **2**B, **3**A and **3**B are side cross sectional views of a NAND memory device of embodiments of the disclosure. FIG. **3**C is a top cross sectional view of the device of FIGS. **3**A and **3**B. FIG. **2**C is a top cross sectional view of NAND memory devices of FIGS. **2**A and **2**B. FIGS. **2**D and **2**E are schematic circuit diagrams of the devices of FIGS. **2**A and **2**B, respectively.

[0012] FIG. **4**A is a side cross sectional views of a NAND memory device of an embodiment of the disclosure. FIG. **4**B is a top cross sectional view of the device of FIG. **4**A.

[0013] FIGS. **5**A and **5**B are perpendicular side cross sectional views along lines A-A' and B-B' in FIG. **5**C of a lower select gate device level of the NAND memory device of an embodiment of the disclosure. FIG. **5**C is a top cross sectional view of the device of FIGS. **5**A and **5**B.

[0014] FIGS. **6**A, **6**B, **6**C and **6**D are side cross sectional views of steps in the method of making the lower select gate device level of the NAND memory device of an embodiment of the disclosure.

[0015] FIGS. **7**, **8**, **9** and **10** are side cross sectional views of steps in the method of making the memory device levels of the NAND memory device of an embodiment of the disclosure.

[0016] FIGS. **11**A and **11**B are perpendicular side cross sectional views along lines A-A' and B-B' in FIG. **11**C of an upper select gate device level of the NAND memory device of an embodiment of the disclosure. FIG. **11**C is a top cross sectional view of the device of FIGS. **11**A and **11**B.

[0017] FIGS. **12**A and **12**B are side cross sectional views of respective lower and upper select gate device level of the NAND memory device of an embodiment of the disclosure.

[0018] FIGS. **13**A and **13**B are side cross sectional views of NAND memory devices of other embodiments of the disclosure.

[0019] FIG. **14**A is a top cross sectional view of the prior art device and FIGS. **14**B and **14**C are a top cross sectional views of NAND memory devices according to embodiments of the disclosure.

[0020] FIGS. **14**D and **14**E are respective side cross sectional views along lines A-A' and B-B' in FIG. **14**C of a NAND memory device of an embodiment of the disclosure.

[0021] FIGS. **15**A to **15**K are side cross sectional views of steps in the method of making the NAND memory device shown in FIG. **2**A.

[0022] FIGS. **16**A to **16**B are side cross sectional views of steps in the method of making the NAND memory device shown in FIG. **3**A.

[0023] FIGS. **17**A to **17**H are side cross sectional views of steps in a method of overcoming misalignment of memory stacks in making a NAND memory device with at least two memory stacks.

[0024] FIGS. **18**A to **18**F are side cross sectional views of steps in method of making the NAND memory device with a current boosting layer according to another embodiment. FIG. **18**G is a cross sectional view of an alternative NAND memory device with a current boosting layer according to an embodiment.

[0025] FIGS. **19**A to **19**D are side cross sectional views of steps in the method of making the NAND memory device according to another embodiment. FIG. **19**E is a schematic circuit diagram of the device of FIG. **19**D.

[0026] FIGS. **20**A to **20**J are side cross sectional views of steps in the method of making the NAND memory device shown in FIG. **2**B.

[0027] FIG. **21** is a vertical cross-sectional view of an exemplary structure after formation of a first alternating stack of first insulating layers and first spacer material layers according to an embodiment of the present disclosure.

[0028] FIG. **22** is a vertical cross-sectional view of the exemplary structure after formation of first memory openings according to an embodiment of the present disclosure.

[0029] FIG. **23** is a vertical cross-sectional view of the exemplary structure after formation of a first memory film layer according to an embodiment of the present disclosure.

[0030] FIG. **24** is a vertical cross-sectional view of the exemplary structure after formation of a first sacrificial material liner according to an embodiment of the present disclosure.

[0031] FIG. **25** is a vertical cross-sectional view of the exemplary structure after formation of first memory films according to an embodiment of the present disclosure.

[0032] FIG. **26** is a vertical cross-sectional view of the exemplary structure after formation of sacrificial fill material portions according to an embodiment of the present disclosure.

[0033] FIG. **27** is a vertical cross-sectional view of the exemplar structure after formation of recess cavities according to an embodiment of the present disclosure.

[0034] FIG. **28** is a vertical cross-sectional view of the exemplary structure after formation of temporary landing pads according to an embodiment of the present disclosure.

[0035] FIG. **29** is a vertical cross-sectional view of the exemplary structure after formation of a second alternating stack of second insulating layers and second spacer material layers according to an embodiment of the present disclosure.

[0036] FIGS. **30**A and **30**B are vertical cross-sectional views of exemplary structures after formation of second memory openings according to alternative embodiments of the present disclosure.

[0037] FIG. **31** is a vertical cross-sectional view of the exemplary structure after formation of a second memory film layer and a second sacrificial material liner according to an embodiment of the present disclosure.

[0038] FIG. **32** is a vertical cross-sectional view of the exemplary structure after formation of second memory films according to an embodiment of the present disclosure.

[0039] FIG. **33** is a vertical cross-sectional view of the exemplary structure after formation of memory cavities according to an embodiment of the present disclosure.

[0040] FIG. **34** is a vertical cross-sectional view of the exemplary structure after formation of a semiconductor channel layer according to an embodiment of the present disclosure.

[0041] FIGS. **35**A and **35**B are vertical cross-sectional views of exemplary structures after formation of memory stack structures, dielectric cores, and drain regions according to alternative embodiments of the present disclosure.

[0042] FIG. **36** is a vertical cross-sectional view of the exemplary structure after formation of a planarization material layer and backside trenches according to an embodiment of the present disclosure.

[0043] FIG. **37** is a vertical cross-sectional view of the exemplary structure after formation of backside recesses by removal of the sacrificial material layers according to an embodiment of the present disclosure.

[0044] FIG. **38** is a vertical cross-sectional view of the exemplary structure after formation of a gate dielectric layer according to an embodiment of the present disclosure.

[0045] FIG. **39** is a vertical cross-sectional view of the exemplary structure after formation of electrically conductive layers according to an embodiment of the present disclosure.

[0046] FIG. **40** is vertical cross-sectional view of the exemplary structure after formation of source regions, insulating spacers, and backside contact via structures according to an embodiment of the present disclosure.

DETAILED DESCRIPTION

[0047] As discussed above, the present disclosure is directed to three-dimensional memory devices including a vertical stack of multilevel memory arrays and methods of making the same, the various aspects of which are described below. An embodiment of the disclosure can be employed to form semiconductor devices such as three-dimensional monolithic memory array devices comprising a plurality of NAND memory strings. The drawings are not drawn to scale. Multiple instances of an element may be duplicated where a single instance of the element is illustrated, unless absence of duplication of elements is expressly described or clearly indicated otherwise. Ordinals such as "first," "second," and "third" are employed merely to identify similar elements, and different ordinals may be employed across the specification and the claims of the instant disclosure. As used herein, a first element located "on" a second element can be located on the exterior side of a surface of the second element or on the interior side of the second element. As used herein, a first element is located "directly on" a second element if there exist a physical contact between a surface of the first element and a surface of the second element.

[0048] As used herein, a "layer" refers to a material portion including a region having a thickness. A layer may extend over the entirety of an underlying or overlying structure, or may have an extent less than the extent of an underlying or overlying structure. Further, a layer may be a region of a homogeneous or inhomogeneous continuous structure that has a thickness less than the thickness of the continuous structure. For example, a layer may be located between any pair of horizontal planes between, or at, a top surface and a bottom surface of the continuous structure. A layer may extend horizontally, vertically, and/or along a tapered surface. A substrate may be a layer, may include one or more layers therein, and/or may have one or more layer thereupon, thereabove, and/or therebelow.

[0049] A monolithic three dimensional memory array is one in which multiple memory levels are formed above a single substrate, such as a semiconductor wafer, with no intervening substrates. The term "monolithic" means that layers of each level of the array are directly deposited on the layers of each underlying level of the array. In contrast, two-dimensional arrays may be formed separately and then packaged together to form a non-monolithic memory device. For example, non-monolithic stacked memories have been constructed by forming memory levels on separate substrates and vertically stacking the memory levels, as described in U.S. Pat. No. 5,915,167 titled "Three Dimensional Structure Memory." The substrates may be thinned or removed from the memory levels before bonding, but as the memory levels are initially formed over separate substrates, such memories are not true monolithic three dimensional memory arrays. The various three-dimensional memory devices of the present disclosure include a monolithic three-dimensional NAND string memory device, and can be fabricated employing the various embodiments described herein.

[0050] Three dimensional (3D) vertical NAND devices (i.e., devices in which at least a part of the channel extends perpendicular to the major substrate surface) requires etching of deep, high aspect ratio memory openings or holes for formation of the vertical channel due to a high number of stacked memory layers surrounding the vertical channels. The terms "memory hole" and "memory opening" are used interchangeably herein. A memory layer includes a control gate and associated charge storage region (e.g., a dielectric isolated floating gate, an ONO stack, etc.) and at least a portion of two dielectric isolation layers located above and below each control gate.

[0051] However, the hard mask thickness used during high aspect ratio etching limits of the maximum number of stacked memory layers in the vertical NAND because the amount of hard mask thickness consumed increases during memory opening etching with increasing amount of memory layers stacked in the memory structure. For example, for a 1500 nm thick hard mask, at most 35 memory layers may be etched using reactive ion etching (RIE) to form the memory opening before all of the hard mask thickness is consumed by the etching. Increasing the hard mask thickness to increase the number of stacked memory levels is also not highly desirable because an increase in the hard mask thickness undesirably increases the aspect ratio of the opening.

[0052] Furthermore RIE energy also limits the number of stacked memory layers in the vertical NAND. The reactive ions are scattered within the high aspect memory opening during the etching, which leads to a decrease in the RIE energy. For a sufficiently deep, high aspect ratio opening, the RIE energy will eventually be reduced to an extent at which the RIE process loses the capability to etch the memory opening. Therefore, with a smaller RIE energy, a lower number of memory layers can be etched at the same time. However, increasing the RIE energy is also not highly desirable because it leads to increased back sputtering effects which may lead to control gate to control gate (i.e., word line to word line) shorts. Therefore, the RIE energy also limits the number of stacked memory layers in the vertical NAND.

[0053] The present inventors realized that the number of stacked memory layers in a vertical NAND may be increased if the portions of each memory openings are etched sequentially. Due to the limited depth of the opening in sequential etching, the high etching aspect etching ratio challenges noted above may be decreased.

[0054] In the sequential memory opening etching method, a lower portion of the memory stack is formed over a substrate. This portion includes only a part of the memory layers that will be used in the vertical NAND. The lower portions of the memory openings are etched in the lower portion of the memory stack. Then, at least one additional portion of the memory stack is formed over the lower portion of the memory stack. The at least one additional portion of the memory stack contains additional memory levels. Then, additional portions of the memory openings are then etched in the at least one additional portion of the memory stack.

[0055] If the stack contains two portions, then the at least one additional portion comprises an upper portion of the stack and the additional portions of the memory openings comprise upper portions of the memory openings. If the stack contains more than two portions, then the above process may be repeated several times. In this case, the at least one additional portion comprises one or more middle portions and an upper portion of the stack and the additional portions of the memory openings comprise one or more middle portions and upper portions of the memory openings.

[0056] The separate etching of memory opening portions in each portion of the stack may be conducted with separate hard masks. Thus, each hard mask used during each etching step may be relatively thin and the hard mask thickness does not limit the total number of memory layers in the stack. Likewise, because each RIE step of each memory opening portions forms an opening that has a limited depth, the RIE energy also does not limit the total number of memory layers in the stack.

[0057] However, because the different portions of the memory openings are etched during different etching steps using different lithography steps and different hard mask layers, it may be difficult to align the different portions of each memory opening (i.e., lower portion, upper portion and optionally one or more middle portions) to form a continuous memory opening through the entire stack due to photolithography misalignment issues, especially if each memory opening has more than two portions (i.e., the stack is etched three or more times to form a memory opening). The misalignment of the memory opening portions may lead to channel discontinuity which results in an open NAND string.

[0058] The present inventors realized that the memory opening alignment challenges may be reduced or avoided by adding a landing pad between the memory stack portions. The landing pad is wider (e.g., had a larger diameter) than the channel in the horizontal direction. The landing pad may be 10-100% wider, such as 25-75% wider than the channel (i.e., for disc shaped pads and cylindrical channels, the pad diameter is larger than the channel diameter by 10-100%). For example, for a 25-150 nm, such as a 45-50 nm diameter cylindrical channel, the pad diameter (i.e., width) may be 30-300 nm, such as 55-100 nm. The pad may be 20-50 nm, such as 30-40 nm thick. Thus, the landing pad connects adjacent channel portions in adjacent memory opening portions of the same memory opening even if the memory opening portions are misaligned with respect to each other.

[0059] Use of reactive ion etching to form the memory openings may result in memory openings that narrow towards the bottom of the opening. This is especially true when etching deep openings that have a high aspect ratio. As illustrated in the FIGS. and discussed in more detail below, the landing pads contact the upper, widest portion of the memory openings. In an embodiment, the landing pad is wider than the widest portion of the memory openings. In some embodiments, the memory openings include a blocking dielectric layer, a charge storage region and a tunnel dielectric in addition to the channel. In these embodiments, the landing pad in preferably has a larger width than a widest portion of the channel, tunnel dielectric, charge storage region and blocking dielectric layer.

[0060] The landing pad may comprise any suitable semiconductor or electrical conductor material, such as silicon, metal, metal alloy, etc. Preferably, the landing pad is made of the same semiconductor material as the channel of the vertical NAND. For example, the landing pad may comprise a polysilicon landing pad if the channel is a polysilicon channel. A semiconductor landing pad may be intrinsic or have the same conductivity type (e.g., p or n) as the channel. The semiconductor landing pad may be heavier doped than the channel (e.g., heavily doped landing pad and lightly doped channel), have the same doping concentration as the channel or may be lighter doped than the channel. In other words, the pad resistivity may be less than, greater than or the same as the resistivity of the channel material. Alternatively, the landing pad may comprise a metal (e.g., Ti, W, etc.) or conductive metal alloys (e.g., TiN, WN, a metal silicide, such as titanium, tungsten, nickel, cobalt or platinum silicide, etc.).

[0061] The landing pad may be formed over each channel portion (except over the upper most channel portion if desired) during the same deposition step as the channel deposition step or during subsequent deposition step. Then, the next overlying channel portion is formed on the landing pad.

[0062] Since the landing pad adds an amount of resistance to the vertical NAND string, the landing pad may also be considered a resistor built into the vertical channel of the vertical NAND string. The impact of the increase in resistance on the vertical NAND read performance due to the presence of the resistor should not be great.

[0063] For example, for a heavily doped landing pad/resistor comprising heavily doped polysilicon (e.g., 1019 cm-3 doping concentration) having a thickness is 30 nm, the resistance value is 1.35 kOhm. If the stack includes five landing pads per channel or ten landing pads per U-shaped channel in a P-BiCS vertical NAND, then the total resistance is 13.5 kOhm for a 50 nm diameter memory opening. If a 400 nA read current is used in the NAND string, then the bit line voltage needs to increase by only 5 mV due to the ten additional series resistors/landing pads. Likewise, an additional thermal budget (e.g., MONOS anneal) may be added due to the presence of the landing pads. However, the thermal budget impact on the NAND string characteristics should be manageable.

[0064] Vertical NAND devices containing a landing pad/built-in resistor may have any suitable configuration. FIGS. **2**A through **4**B illustrate various non-limiting, exemplary VNAND devices containing a landing pad/built-in resistor.

[0065] FIGS. **2**A and **2**D illustrate a vertical NAND containing a landing pad/built-in resistor having a single vertical channel having a pillar type configuration. FIGS. **2**B and **2**E illustrate a vertical NAND containing a landing pad/built-in

resistor having a U-shaped (e.g., pipe shaped) channel having a "P-BiCS" type configuration. FIG. **2**C illustrates a top view of the devices in FIGS. **2**A and **2**B. FIGS. **3**A through **4**B illustrate a vertical NAND containing a landing pad/built-in resistor having a compact vertical NAND ("CVNAND") type configuration, which will be described in more detail below. The CVNAND device is also described in more detail in U.S. patent application Ser. No. 13/754,293, filed on Jan. 30, 2013 and incorporated herein by reference in its entirety.

[0066] In an embodiment, the NAND string **180** illustrated in FIGS. **2**A-**4**B may be formed with a vertical channel. In one aspect, the vertical channel **1** has a solid, rod shape as shown in FIGS. **2**A, **2**B, **3**B, **3**A and **4**B. In this aspect, the entire channel comprises a semiconductor material. In another aspect, the vertical channel has a hollow cylinder shape as shown in FIG. **4**A. In this aspect, the vertical channel includes a non-semiconductor core **2** surrounded by a semiconductor channel **1** shell. The core may be unfilled or filled with an insulating material, such as silicon oxide or silicon nitride.

[0067] In some embodiments, the monolithic three dimensional NAND string **180** comprises a semiconductor channel **1** having at least one end portion extending substantially perpendicular to a major surface **100***a* of a substrate **100**, as shown in FIGS. **2**A, **2**D, **3**A and **3**B. For example, the semiconductor channel **1** may have a pillar shape and the entire pillar-shaped semiconductor channel extends substantially perpendicularly to the major surface **100***a* of the substrate **100**. In these embodiments, the source/drain electrodes of the device can include a lower electrode **102** (e.g., a heavily doped semiconductor region source electrode in the major surface **100***a* of a semiconductor substrate **100**) provided below the semiconductor channel **1** (optionally in contact with a doped source region **103**), and an upper electrode **202** (e.g., bit line) formed over the doped drain region **203** in the semiconductor channel **1**, as shown in FIG. **2**A. The lower electrode **102** contacts a metal interconnect outside of the view shown in FIGS. **2**A and **3**A or contacts metal wires of circuitry under the array. Thus, the drain/bit line electrode **202** contacts the pillar-shaped semiconductor channel **1** (via the drain region **203**) from above, and the source electrode **102** contacts the pillar-shaped semiconductor channel **1** from below (e.g., via source region **103**). For example, the device shown in FIGS. **2**A and **2**D contains two levels of landing pads **25**, which divide the channel and the stack into three portions: lower portion of the stack **120**L containing the lower portions **1***xa*, **1***xb* of the wings **1***a*, **1***b*; middle portion of the stack **120**M containing the middle portions **1***ya*, **1***yb* of the wings **1***a*, **1***b*; and upper portion of the stack **120**U containing the upper portions **1***za*, **1***zb* of the wings **1***a*, **1***b*.

[0068] Alternatively, as shown in FIG. **2**B, the NAND string may have a U shape (also known as a "pipe" shape) with two vertical channel wing portions connected with a horizontal channel connecting the wing portions. In one aspect, the U shaped or pipe shaped channel may be solid, as in the solid rod shaped vertical channel NAND as shown in FIG. **2**B. In another aspect, the U shaped or pipe shaped channel may be hollow cylinder shaped, (similar to the hollow cylinder pipe shaped vertical channel NAND as shown in FIG. **4**A). The U-shaped pipe channel may be filled or unfilled. Separate front side and back side methods for fabricating both single vertical channel and U shaped channel NAND strings are taught in U.S. Pat. No. 8,187,936, hereby incorporated by reference in its entirety for teaching of the separate front and back side processing methods.

[0069] The two wing portions **1***a* and **1***b* of the U-shape semiconductor channel may extend substantially perpendicular to the major surface of the substrate, and a connecting portion **1***c* of the U-shape semiconductor channel **1** connects the two wing portions **1***a*, **1***b* extends substantially perpendicular to the major surface of the substrate. The wing portions **1***a*, **1***b* of the channel **1** contain the built-in landing pads/resistors **25**. For example, the device shown in FIGS. **2**B and **2**E contains two levels of landing pads **25**, which divide the channel and the stack into three portions: lower portion of the stack **120**L containing the lower portions **1***xa*, **1***xb* of the wings **1***a*, **1***b*; middle portion of the stack **120**M containing the middle portions **1***ya*, **1***yb* of the wings **1***a*, **1***b*; and upper portion of the stack **120**U containing the upper portions **1***za*, **1***zb* of the wings **1***a*, **1***b*.

[0070] In these embodiments, one of the source or drain electrodes **202** (e.g., bit line) contacts the first wing portion of the semiconductor channel from above, and another one of a source or drain electrodes (e.g., source line) **102** contacts the second wing portion of the semiconductor channel **1** from above. An optional body contact electrode **91** may be disposed over or in the substrate to provide body contact to the connecting portion of the semiconductor channel **1** from below. The NAND string's select or access transistors **16** are shown in FIGS. **2**B and **2**E. These transistors and their operation are described in U.S. Pat. No. 8,187,936, which is incorporated by reference for a teaching of the select transistors. The device of FIGS. **2**B and **2**E is described in more detail below with reference to the method of making the P-BiCS type vertical NAND, as shown in FIGS. **17**A-**17**H.

[0071] The substrate **100** can be any semiconducting substrate known in the art, such as monocrystalline silicon, IV-IV compounds such as silicon-germanium or silicon-germanium-carbon, III-V compounds, II-VI compounds, epitaxial layers over such substrates, or any other semiconducting or non-semiconducting material, such as silicon oxide, glass, plastic, metal or ceramic substrate. The substrate **100** may include integrated circuits fabricated thereon, such as driver circuits for a memory device.

[0072] Any suitable semiconductor materials can be used for semiconductor channel **1**, for example silicon, germanium, silicon germanium, indium antimonide, or other compound semiconductor materials, such as III-V or II-VI semiconductor materials. The semiconductor material may be amorphous, polycrystalline or single crystal. The semiconductor channel material may be formed by any suitable deposition methods. For example, in one embodiment, the semiconductor channel material is deposited by low pressure chemical vapor deposition (LPCVD). In some other embodiments, the semiconductor channel material may be a recrystallized polycrystalline semiconductor material formed by recrystallizing an initially deposited amorphous semiconductor material.

[0073] The insulating fill material **2** in FIG. **4**A may comprise any electrically insulating material, such as silicon oxide, silicon nitride, silicon oxynitride, or other insulating materials.

[0074] Each monolithic three dimensional NAND string **180** further comprises a plurality of control gate electrodes **3**, as shown in FIGS. **2**A, **2**B, **3**A, **3**B and **4**A-**4**B. The control gate electrodes **3** may comprise a portion having a strip shape extending substantially parallel to the major surface **100***a* of the substrate **100**. The plurality of control gate electrodes **3** comprise at least a first control gate electrode **3***a* located in a

first device level (e.g., device level A) and a second control gate electrode **3***b* located in a second device level (e.g., device level B) located over the major surface **100***a* of the substrate **100** and below the device level A, as shown in FIGS. **2**A, **2**B, **3**A and **4**A. The control gate material may comprise any one or more suitable conductive or semiconductor control gate material known in the art, such as doped polysilicon or a metal, such as tungsten, copper, aluminum, tantalum, titanium, cobalt, titanium nitride or alloys thereof.

[0075] Each channel **1** shown in FIGS. **2**A-**4**B contains one or more landing pads/built-in resistors **25** described above. Preferably, each landing pad **25** is located in a vertical position of the channel between control gates **3** (i.e., having one control gate above and one control gate below). Thus, the landing pad is located between the first device level (e.g., level A) and the second device level (e.g., level B). A lower portion of the semiconductor channel (e.g., **84***x*) located in the first device level contacts a bottom surface of the landing pad **25**. A middle or upper portion (e.g., **84***y*) of the semiconductor channel located in the second device level contacts a top surface of the same landing pad **25**.

[0076] The landing pad **25** may extend horizontally beyond the memory hole **84** diameter or width to be located over and under adjacent control gates **3** inside the dielectric fill material **121** Thus, the landing pad **25** may extend into the insulating layer **121** between the first **3***a* and the second **3***b* control gate electrodes **3**. The fill material **121** isolates the landing pad **25** from direct contact with the control gate electrodes **3**. Alternatively, the landing pad **25** may be relatively thick and contact dummy control gate electrodes **3***d*, as shown in FIGS. **17**G and **17**H. Dummy control gate electrodes **3***d* (i.e., dummy word lines) are not connected to outside control circuitry and are not provided with a current or voltage during NAND operation.

[0077] A blocking dielectric layer **7** is located adjacent to and may be surrounded by the control gate(s) **3**. The blocking dielectric layer **7** may comprise a continuous layer or a plurality of blocking dielectric layer segments located in contact with a respective one of the plurality of control gate electrodes **3**. For example, a first dielectric segment **7***a* located in device level A and a second dielectric segment **7***b* located in device level B are in contact with control electrodes **3***a* and **3***b*, respectively, as shown in FIG. **4**A. In some embodiments, at least a portion of each of the plurality of blocking dielectric layer segments **7** surrounds the top, bottom, and two edge portions of a control gate electrode **3** between two adjacent NAND strings, as shown in FIGS. **3**A and **4**A.

[0078] The NAND devices also comprise one or more charge storage regions **9** located between the channel **1** and the blocking dielectric layer **7**. The charge storage regions **9** may comprise a continuous vertical charge storage layer adjacent to plural control gate electrodes **3**, as shown in FIGS. **2**A and **2**B or the plurality of discrete charge storage regions **9** comprise at least a first discrete charge storage segment **9***a* located in the device level A and a second discrete charge storage segment **9***b* located in the device level B, as shown in FIG. **4**A.

[0079] A tunnel dielectric **11** is located between the charge storage region(s) **9** and the semiconductor channel **1**. The blocking dielectric layer **7** and the tunnel dielectric **11** may be independently selected from any one or more same or different electrically insulating materials, such as silicon oxide, silicon nitride, silicon oxynitride, or other insulating materials.

[0080] The charge storage region(s) **9** may comprise a conductive (e.g., metal or metal alloy such as titanium, platinum, ruthenium, titanium nitride, hafnium nitride, tantalum nitride, zirconium nitride, or a metal silicide such as titanium silicide, nickel silicide, cobalt silicide, or a combination thereof) or semiconductor (e.g., polysilicon) floating gate(s), conductive nanoparticles, or a charge storage dielectric layer or segment (e.g., silicon nitride or another dielectric). For example, in some embodiments, the charge storage regions comprise silicon nitride, where the silicon oxide blocking dielectric layer **7**, the nitride charge storage region **9** and the silicon oxide tunnel dielectric **11** form oxide-nitride-oxide (ONO) memory film **13** of the NAND string shown in FIGS. **2**A, **2**B, **3**A and **4**A. Alternatively, the blocking dielectric layer may comprises a tri-layer ONO dielectric, such that the memory film **13** comprises ONO (11)-N (9)-O (7).

[0081] As shown in FIG. **4**B, the tunnel dielectric **11** comprises a cylinder which surrounds the semiconductor channel **1**, the charge storage region **9** comprises a cylinder which surrounds the tunnel dielectric, and the blocking dielectric layer **7** comprises a cylinder which surrounds the charge storage region. The first **3***a* and the second **3***b* control gate electrodes **3** surround the blocking dielectric layer in each NAND string.

[0082] The CVNAND configuration shown in FIGS. **3**A-**4**B provides a denser memory design than the configurations shown in FIGS. **2**A and **2**B, respectively, for the following reasons. For example, as shown in FIG. **2**A, each pillar NAND string **180** is separated from adjacent strings by a word line cut or trench **86**. The bottom source select gate (SGS) device **16**L in FIG. **2**A requires a cut space or trench **86** between the lower select gate electrodes which are built from the bottom of the stack metal layer. Furthermore, the source line **102** formation process and p-well **300** contact requires additional space in the device of FIG. **2**A.

[0083] Likewise, as shown in FIGS. **2**B and **2**E, each U-shaped P-BiCS NAND string **180** contains a dielectric **87** filled slit trench **86**A between the select and control gates **3** and the wings or arms of the U-shaped channel **1** which extends between upper source line **102** and bit line **202**. Furthermore, as shown in FIG. **2**B, adjacent U-shaped NAND strings **180** are also separated by a word line cut or trench **86**B not to lose active holes and to reduce word line Rs. The top view of the filled memory holes **84** (i.e., containing the NAND string channels **1** and a film **13** comprising tunnel dielectric, charge storage region and blocking dielectric layer) and the trenches **86** in vertical pillar and P-BiCS type devices is illustrated in FIG. **2**C. The control gates are omitted from FIG. **2**C for clarity and the supporting columns **88** which prevent the device levels from collapsing on each other during removal of sacrificial material are shown in the bottom of the FIG. The trenches result in a higher than desired pitch between adjacent filled memory holes (e.g., a pitch of about 150 nm) and reduces the array efficiency by more than 50%.

[0084] The word line (i.e., control gate) trenches or cuts **86** in an array of vertical NAND strings may be eliminated to increase the device density and reduce the filled memory hole **84** pitch. Embodiments include monolithic three dimensional NAND strings and methods of making three dimensional NAND devices (e.g., CVNAND devices) having at least one 3×3 array of vertical NAND strings in which the control gate electrodes are continuous in the array and do not have an air gap or a dielectric filled trench **86** in the array. The NAND device is formed by first forming a lower select gate level

having separated lower select gates, then forming plural memory device levels containing a plurality of NAND string portions, and then forming an upper select gate level over the memory device levels having separated upper select gates.

[0085] Embodiments of the compact vertical NAND (i.e., CVNAND) device are shown in FIGS. **3**A, **3**B, **33**C, **4**A and **4**B. FIG. **3**A schematically illustrates a side cross sectional view of the entire CVNAND device, including the lower **50** and upper **60** select gate device levels located below and above the memory device levels **70** shown in FIG. **4**A. FIG. **3**B schematically illustrates a side cross sectional view of the memory levels **70** and select gate device levels **50**, **60** of one CVNAND array and FIG. **33**C schematically illustrates the top view location of the filled memory holes **84** and supporting pillars **88**. FIG. **4**A illustrates a side cross sectional view of the memory device levels **70** (i.e., levels containing the control gate electrodes/word lines) in one NAND string array. FIG. **4**B schematically illustrates the top cross sectional view of the relationship between the continuous control gate electrodes **3** and the filled memory holes **84** in each array block.

[0086] As shown in FIGS. **3**A, **4**A and **4**B the first control gate electrode **3***a* and the second control gate electrode **3***b* are continuous in the array, such that these electrodes do not have an air gap or a dielectric filled trench in the array. As shown in FIG. **4**B, the control gate electrodes **3** when viewed from the top comprise a "mesh" which is continuous except for the memory holes **84** which are completed filled with the channel **1**, an optionally the tunnel dielectric **11**, charge storage region **9**, blocking dielectric layer **7** and optional insulating fill **2**. In other words, the control gate electrodes **3** may be considered to be a mesh in which all openings are filled

[0087] FIG. **4**B shows two control gate electrodes **3***a*L and **3***a*R (i.e., left and right electrodes) located in the first device level A. Each electrode forms a continuous mesh around an exemplary 4×3 array of filled memory holes **84**. Each electrode **3***a*L and **3***a*R contacts a respective word line **200**L and **200**R of an array block. An array block includes plural arrays (e.g., plural 4×3 arrays) which are connected by their respective control gate electrodes (e.g., **3***a*L) to a common word line (e.g., **200**L). Only one array is shown as being connected to each word line via a respective control gate electrode in FIG. **4**B for clarity. However, it should be understood that the pattern shown in FIG. **4**B repeats along the word lines. Thus, each array is located in a respective array block, where the left control gate electrode **3***a*L in one block in device level A is separated from the right control gate electrode **3***a*R in the same level A in an adjacent array block by an air gap (if the slit trench **81** is not filled) or a dielectric filled trench **81**. The same configuration is used in the other memory levels shown in FIGS. **4**A and **3**A.

[0088] The CVNAND string's select or access transistors **16**L, **16**U are shown in FIGS. **3**A, **3**B, **5**, **6** and **11**. As shown in FIGS. **3**A and **5**A-**5**C, a lower select gate electrode **51** is located adjacent to a lower portion **1**L of the pillar-shaped semiconductor channel **1** below the control gate electrodes **3** (e.g., **3***a*, **3***b*) in the lower select gate electrode level **50**. Level **50** may be a source select gate level and electrode **51** may be a source side select gate electrode. Each lower select gate electrode **51** is separated from adjacent lower select gate electrodes **51** in the array in level **50** by an air gap or a dielectric filled trench **53**.

[0089] Furthermore, as shown in FIGS. **3**A and **11**A-C, an upper select gate electrode **61** is located adjacent to an upper portion **1**U of the pillar-shaped semiconductor channel **1** above the first **3***a* and the second **3***b* control gate electrodes. Electrode **61** may comprise a drain side select gate electrode located in the drain upper select gate level **60**. Each upper select gate electrode **61** is separated from adjacent upper select gate electrodes **61** in the array in level **60** by an air gap or a dielectric filled trench **63**.

[0090] In one non-limiting embodiment, each semiconductor channel **1** comprises a first portion **1**U adjacent to the upper select gate electrode **61**, a second portion **1**L adjacent to the lower select gate electrode **51**, a third (i.e., middle or memory) portion **1**M located at least in the first (A) and the second (B) device levels between the first and the second portions, and an optional, additional landing pad portion **55** located between the second **1**L and the third **1**M channel **1** portions.

[0091] In one embodiment shown in FIG. **3**B, the third (middle) portion **1**M of the channel **1** has a larger diameter or width than the first (upper) **1**U and the second (lower) **1**L channel **1** portions because these three portions are formed in separate process steps as described below. The thinner upper **1**U and lower **1**L channel **1** portions allow the space for the air gap or a dielectric filled trench **53**, **63** to be added between adjacent upper **61** and lower **51** select gates in respective levels **60** and **50**. In contrast, since the control gates **3** are continuous and do not require air gap or trench adjacent to the middle (memory) portions **1**M of the channel **1**, the channel portions **1**M may be thicker than channel portions **1**U and **1**L.

[0092] Finally, as shown in FIGS. **3**A, **3**B, **5** and **6** and as will be explained in more detail below, the channel **1** may optionally contain additional landing pad portions **55** between the lower select gate level **50** and the memory levels **70** and between the memory level **70** and the upper select gate level **60**. The landing pad portion has a larger diameter or width than the second **1**L and the third **1**M portions of the channel **1**.

[0093] FIGS. **5**A-**5**C illustrate a lower select gate level **50** of the CVNAND device. FIG. **5**C shows a top view and FIGS. **5**A and **5**B illustrate side cross sectional views along lines A-A' and B-B' in FIG. **5**C. The lower select gate level **50** is located over the substrate **100**. The lower select gate level **50** includes the lower portions **1**L of the plurality of semiconductor channels **1** (containing source regions **103** on the bottom), and a plurality of lower source electrodes **102**. Each lower source electrode is electrically connected to each of the plurality of lower portions **1**L of the semiconductor channels through a respective source region **103**. Level **50** also includes the plurality of lower select gate electrodes **51**, located adjacent to a gate dielectric **54** contacting the lower portion **1**L of each semiconductor channel **1**. The channel **1**L, gate dielectric **54** and select gate **51** form the lower (source) select transistor **16**L of each NAND string. Strip shaped lower select gate lines **52** connect the select gates **51** in rows to input/outputs (not shown), as shown in FIGS. **5**B and **5**C. Level **50** is formed before the layers of the memory level **70** are formed over level **50** to allow the select gates **50** to be separated.

[0094] FIGS. **6**A-**6**D illustrate steps in forming this level **50** shown in FIG. **5**A. As shown in FIG. **6**A, the lower portions **1**L of the channel **1** may be formed by etching a silicon substrate **100** to form silicon pillars **1**L using any suitable lithography and etching technique. Alternatively, pillars **1**L may be grown in openings in a mask located over the substrate **100**. In this case, the select gate device level **50** is lifted up over the substrate **100** surface **100***a*, so that the select transistors **16**L have polysilicon channels **1**L and CMOS devices

may be formed in single crystal silicon substrate **100** under the NAND array. This option is less preferred.

[0095] This is followed by oxidizing the pillars **1**L to form a silicon oxide gate dielectric **54** on pillar sidewall(s) and on exposed portion of substrate **100** surface **100***a*. Alternatively, the gate dielectric may be deposited on the pillars **1**L and the surface **100**A of the substrate **100** by CVD or other suitable methods. In this case, the dielectric **54** may comprise materials other than silicon oxide.

[0096] Finally, the upper surface **100**A of the substrate **100** is doped (e.g., by ion implantation) to form the source regions **103** and the source electrode **102** (i.e., buried doped source line in substrate **100**). The buried source line **102** in the substrate **100** is made by a high dose implant. Alternatively, an optional a buried metal mesh (e.g., tungsten, etc.) may be provided in addition to or instead of the buried implanted lines **102** as the source electrode(s). Source regions **103** may be formed by angled ion implantation (e.g., phosphorus or arsenic implant into a p-type silicon substrate) into the base of the pillars **1**L. The implantation may be conducted before or after the dielectric **54** formation or after the select gate **51** formation as it is described below.

[0097] Next, as shown in FIG. **6**B, during a step of forming the lower select gate level **50**, each lower select gate electrode **51** is separated from adjacent lower select gate electrodes in the array by an air gap or a dielectric filled trench **53**. This may be done by forming the select gate **51** layer over the dielectric **54** covered lower portions **1**L of the channel **1** followed by anisotropically etching the select gate layer to leave discreet, separated sidewall spacer shaped select gates **51** on the gate dielectric **54** covered lower portions **1**L of the channel. The space between the spacer gates **51** may be left as an air gap or filled with an dielectric fill **53**. Alternatively, select gates **51** may be formed by depositing a conductive layer and patterning it by lithography and etching into discreet gates **51**. If desired, portions of the gates **51** of transistors **16**L may be silicided.

[0098] The select gate lines **52** are then formed to connect the discreet select gates into rows. The lines **52** may be formed by depositing one or more conductive layers and then performing lithography and etching to form the strip shaped lines **52**. The lines **52** are separated from each other in the A-A direction but not in the B-B direction in FIG. **5**C.

[0099] Then, as shown in FIGS. **6**C-**6**D, the optional semiconductor landing pad **55** may epitaxially grown over each lower portion **1**L of the plurality of semiconductor channels **1** exposed in the dielectric filled trenches **53** in the lower select gate level **50**, such that the landing pad has a larger width or diameter than an underlying lower portion of the channel.

[0100] The landing pad **55** formation may comprise epitaxially growing a "mushroom head" shaped overgrown silicon **56** on exposed portions **1**L of the channels **1**. This silicon overgrowth **56** is then covered by an insulating gap fill layer (e.g., silicon oxide or nitride). The silicon mushroom head **56** and the gap fill layer are then planarized (e.g., by CMP) to form planar landing pads **55** on each pillar **1**L separated by an insulating gap fill **57**, as shown in FIG. **6**D.

[0101] FIGS. **7**-**10** illustrate a method of making the lower portion of the memory device levels **70** of FIGS. **4**A and **3**A after the step of forming a lower select gate level **50** according to an embodiment of the disclosure. The memory device levels **70** comprise a plurality of NAND string portions.

[0102] Referring to FIG. **7**, a stack **120** of alternating layers **121** (**121***a*, **121***b*, etc.) and **132** (**132***a*, **132***b* etc.) is formed over the completed lower select gate device level **50** which is located over major surface of the substrate **100**. Layers **121**, **132** may be deposited over the substrate by any suitable deposition method, such as sputtering, CVD, PECVD, MBE, etc. The layers **121**, **132** may be 6 to 100 nm thick. The stack **120** may be covered with an optional cap layer of insulating material **200** different from materials **121** and **132**.

[0103] In this embodiment, the first layers **121** comprise an electrically insulating material, such as silicon oxide, silicon nitride, high-k dielectric (e.g., organic or inorganic metal oxide), etc. The second layers **132** are sacrificial layers. Any sacrificial material that can be selectively etched compared to material **121** may be used for layers **132**, such as conductive or insulating or semiconducting material. For example, the sacrificial material for layers **132** may be silicon nitride when material of layers **121** is silicon oxide.

[0104] The deposition of layers **121**, **132** is followed by etching the stack **120** to form a plurality of memory holes **84**. An at least a 3×3, such as an at least 6×6 array of memory holes **84** may be formed in locations where vertical channels of NAND strings will be subsequently formed.

[0105] The middle semiconductor channel **1** portions **1**M are then formed on the landing pads **55** exposed in the memory holes **84**. The channel portions **1**M may be filled with insulating fill **2** (as shown in FIG. **4**A) or may comprise a solid rod (as shown in FIGS. **3**A and **7**).

[0106] Preferably, the channel **1** portions **1**M material comprises lightly doped p-type or n-type (i.e., doping below 1017 cm-3) silicon material (e.g., polysilicon). An n-channel device is preferred since it is easily connected with n+ junctions (i.e., source **103** and drain **203** n+ doped regions having a doping concentration between 1017 cm-3 and 1021 cm-3). However, a p-channel device may also be used. Other semiconductor materials (e.g., SiGe, SiC, Ge, II-VI, etc.) may also be used.

[0107] The semiconductor channel **1** may be formed by any desired methods. For example, the semiconductor channel material **1** may be formed by depositing semiconductor (e.g., polysilicon) material in the holes **84** and over the stack **120** (e.g., by CVD), followed by a step of removing the upper portion of the deposited semiconductor layer by chemical mechanical polishing (CMP) or etchback using top surface of the stack **120** as a polish stop or etch stop.

[0108] In some embodiments, a single crystal silicon or polysilicon vertical channel **1** may be formed by metal induced crystallization ("MIC", also referred to as metal induced lateral crystallization) without a separate masking step. The MIC method provides full channel crystallization due to lateral confinement of the channel material in the hole **84**.

[0109] In the MIC method, an amorphous or small grain polysilicon semiconductor (e.g., silicon) layer can be first formed in the holes **84** and over the stack **120**, followed by forming a nucleation promoter layer over the semiconductor layer. The nucleation promoter layer may be a continuous layer or a plurality of discontinuous regions. The nucleation promoter layer may comprise any desired polysilicon nucleation promoter materials, for example but not limited to nucleation promoter materials such as Ge, Ni, Pd, Al or a combination thereof.

[0110] The amorphous or small grain semiconductor layer can then be converted to a large grain polycrystalline or single crystalline semiconductor layer by recrystallizing the amor-

phous or small grain polycrystalline semiconductor. The recrystallization may be conducted by a low temperature (e.g., 300 to 600 C) anneal.

[0111] The upper portion of the polycrystalline semiconductor layer and the nucleation promoter layer can then be removed by CMP or etchback using top surface of the stack **120** as a stop, resulting in the structure as shown in FIG. **7**. The removal may be conducted by selectively wet etching the remaining nucleation promoter layer and any formed silicide in the top of layer following by CMP of the top of silicon layer using the top of the stack **120** as a stop.

[0112] Following formation of the channel **1** portions **1**M, at least one slit trench **81** (also shown in FIG. **4**B) is formed in the stack **120**. The openings **81**, **84** may be formed by forming a mask (e.g., a photoresist mask) by photolithography followed by etching unmasked areas. The slit trench opening **81** may be in the shape of a cut traversing more than one NAND string as illustrated in FIG. **4**B. The slit trenches **81** allow back side access to the vertical NAND strings located in memory holes **84** for the control gate **3** formation in the "gate last" process.

[0113] Next, as shown in FIG. **8**, the sacrificial material **132** is selectively etched compared to the first layer **121** material to form recesses **62**. The recesses **62** may be formed by selective, isotropic wet or dry etching which selectively etches the sacrificial material **132** compared to the first layer insulating material **121** through the slit trenches **81**. The recess **62** extends to the channel **1** portions **1**M. Preferably, the entire layers of first sacrificial material **132** between the first layers **121** are removed up to the channel **1** portions **1**M.

[0114] The memory film **13** is then formed in the recesses **62** as shown in FIG. **9**. This includes forming a tunnel dielectric **11** in the recesses over the channel portions **1**M located in the memory openings **84**, forming a charge storage region **9** over the tunnel dielectric, and forming a blocking dielectric layer **7** over the charge storage region in the recesses **62**. The blocking dielectric layer **7** may comprise a silicon oxide layer deposited by conformal atomic layer deposition (ALD) or chemical vapor deposition (CVD). Other high-k dielectric materials, such as hafnium oxide, may be used instead or in addition to silicon oxide. Dielectric **7** may have a thickness of 6 to 20 nm. The charge storage region **9** may comprise a silicon nitride layer deposited by any suitable method, such as ALD, CVD, etc., and have a thickness of 3 to 20 nm. The tunnel dielectric may comprise a relatively thin insulating layer (e.g., 4 to 10 nm thick) of silicon oxide or other suitable material, such as oxynitride, oxide and nitride multi layer stacks, or a high-k dielectric (e.g., hafnium oxide). The tunnel dielectric may be deposited by any suitable method, such as ALD, CVD, etc. Alternatively, the tunnel dielectric may be formed by thermally oxidizing the exposed sidewalls of the middle portions **1**M of the channel **1** exposed in the recesses **62**.

[0115] The control gates **3** are then formed on the blocking dielectric layer in the remaining portions of the recesses **62** through the slit trench(es) **81**, as shown in FIG. **10**. The control gates **3** are preferably metal or metal alloy gates, such as tungsten gates, formed by MOCVD or other suitable methods. Finally, if desired, the slit trenches **81** between array blocks may be filled with a dielectric fill material or they may be left unfilled as air gap trenches. This completes the lower portion of the memory device levels **70**.

[0116] Then, a landing pad/built-in resistor **25** is formed over the channel **1**M, as will be described below with respect to FIG. **16**A. The process of FIGS. **7-10** is repeated again one or more times to form one or more upper portions of the memory levels **70** over the completed lower portion of the memory levels **70**, as shown in FIG. **16**B, and described in more detail below.

[0117] FIGS. **11**A-**11**C illustrate the upper select gate level **60** of the device. FIG. **11**C shows a top cross sectional view (along lines A-A and B-B in FIGS. **11**A and **11**B, respectively, with bit line **202** not shown) and FIGS. **11**A and **11**B illustrate side cross sectional views along lines A-A' and B-B' in FIG. **11**C. The upper select gate level **60** is formed over the plurality of memory device levels **70**, preferably after levels **70** are completed and preferably without using the stack **120** layers. The upper select gate level **60** comprises upper portions **1**U of the plurality of semiconductor channels **1**, and a plurality of upper drain electrodes (e.g., bit lines) **202**. Each upper source or drain electrode **202** is electrically connected to each of the plurality of upper portions **1**U of the semiconductor channels via the drain regions **203**. Level **60** also includes a plurality of upper select gate electrodes **61**. Each upper select gate electrode **61** is located adjacent to a gate dielectric **64** contacting the upper portion **1**U of each semiconductor channel **1**. The channel portion **1**U, gate dielectric **64** and select gate **61** form the upper (drain) select transistor **16**U of each NAND string. The upper select gate lines **66** separated from each other by insulating fill **63** connect the select gates **61** in rows.

[0118] The upper select gate level **60** may be formed in the same manner as the lower select gate level **50**, except as follows. First, the upper portions **1**U (i.e., the channels of the upper select gate transistors **16**U) of the channels **1** are grown on the respective middle portions **1**M of the channels. Thus, portion **1**U may comprise polycrystalline semiconductor (e.g., polysilicon) or recrystallized, nearly single crystal silicon (e.g., recrystallized by the MIC process).

[0119] Second, rather than forming landing pads **55**, the tops of the pillars **1**U are doped with a dopant of the opposite conductivity type (e.g., n-type) than that of the channel **1** portion **1**U (e.g., p-type) to form drain regions **203**. This may be performed by ion implanting P or As into exposed portions of silicon pillars **1**U. Third, as shown in FIG. **11**B, the bit lines **202** are formed by a damascene process in rail shaped trenches in a dielectric layer **204** or by forming the dielectric layer **204** around bit line **202** rails. Otherwise, the upper select gate electrodes **61** may be formed by a sidewall spacer process on gate dielectric **64** covered silicon channels **1**L of the upper select gate transistors **16**U in the same matter as the lower select gate electrodes **51**. If desired, portions of the gates **61** and/or the drain **203** of transistors **16**U may be silicided.

[0120] FIGS. **12**A and **12**B illustrate exemplary dimensions (in nanometers) of the select transistors **16** and elements of levels **50** and **60**, respectively, in units of nanometers. The above configuration provides a dense array for larger block sizes. The CVNAND scales below 5 nm effective half pitch (F/n), where F is the minimum feature size and n is the number of device levels.

[0121] The above described NAND device may be programmed and read by conventional NAND techniques. However, since the select gates for each NAND string are separated, the erase operation of the above device may be advantageously performed by a gate induced drain leakage (GIDL) process through the lower select gate source transistor **16**L in the lower select gate device level **50**. The effective

GIDL erase allows erasing of very tall stacks by optimizing the bottom SGS transistor **16**L with respect to GIDL current (during erase) and off/leakage currents (during inhibit). This also provides an effective erase from source line **102** side only, which allows optimization of off current and leakage current (during inhibit and read) for top SGD transistor **16**U. This allows the device to open up an inhibit window and reduce read current leakage for non selected blocks. It is believed that sub block erase could become effective compared to prior art three dimensional NAND.

[0122] FIGS. **13**A and **13**B are side cross sectional views of a NAND memory device of embodiments of the disclosure. The devices shown in FIGS. **13**A and **13**B are similar to the device shown in FIG. **3**A above, except that the devices shown in FIGS. **13**A and **13**B contain a local interconnect (source contact) **302**. The local interconnect **302** may extend below the array in the embodiment of FIG. **13**A (e.g., the local interconnect may extend in and out of the page under the array in the view of FIG. **13**A). Alternatively, the local interconnect **302** may extend in the slit trenches **81** in the embodiment of FIG. **13**B. The local interconnect **302** may comprise any suitable conductive material, such as tungsten, aluminum, copper, etc.

[0123] In the embodiment of FIG. **13**B, the local interconnect **302** comprises a vertical pillar which electrically contacts the lower electrode **102** (e.g., the heavily doped semiconductor region source electrode in the major surface of the semiconductor substrate **100** or another electrode located over the substrate). The upper portion of the local interconnect **302** is in electrical contact with a source line.

[0124] In the present embodiment, the slit trenches **81** and the local interconnect **302** extend through the memory device levels **70** and through the dielectric trench fill material **53** to an exposed upper surface of the lower electrode **102**. Preferably, the sidewalls of the slit trenches **81** are coated with an insulating layer **304**, such as silicon oxide (see FIGS. **14**D and **14**E), and the local interconnect is formed in the middle of the slit trenches **81** between the insulating layer **304** portions.

[0125] As shown in FIG. **13**B, the width of the array of vertical NAND strings is defined by the space between adjacent trenches **81**, at least one or more of which can be filled with the local interconnect **302**. The local interconnect **302** may contact a common lower electrode **102** of adjacent arrays of strings to provide source side erase for the strings in plural arrays of NAND strings at the same time.

[0126] The local interconnect may be formed by etching the trenches **81** as described above all the way to the lower electrode **102**, forming the insulating layer **304** in the trenches **81** and filling the remaining central space in the trenches with the conductive material of the local interconnect **302**. The portions of the conductive layer of the local interconnect **302** and/or insulating layer **304** which extends out of the trenches **81** may be removed by planarization, such as CMP. In the alternative embodiment of FIG. **13**A, the local interconnect is formed under the array prior to formation of the array.

[0127] FIG. **14**A is a top cross sectional view of the prior art BiCS NAND device shown in FIGS. **1**B and **2**B. FIGS. **14**B and **14**C are a top cross sectional views of the CVNAND memory devices according to embodiments of the disclosure.

[0128] As shown in FIG. **14**B, the filled memory holes **84** (i.e., holes **84** containing the pillar channel **1** and memory film **13**) are arranged in a square or rectangular layout with the memory holes located at corners of an imaginary rectangle or square, similar to the BiCS layout in FIG. **14**A. The upper select gates **61**, bit lines **202** and local interconnect **302** extending to the lower electrode **102** are also shown in FIG. **14**B.

[0129] FIG. **14**C illustrates an alternative embodiment in which the filled memory holes **84** (i.e., the NAND string channel **1** and memory film **13**) are arranged in a substantially hexagonal pattern. This pattern comprises a repeating unit pattern of seven filled memory holes **84** having a central hole **84** surrounded by six other holes **84** arranged in a hexagonal layout around the central hole **84**. In other words a central semiconductor channel **1** and memory film **13** unit is surrounded by six other semiconductor channel and memory film units arranged in a hexagonal layout around the central semiconductor channel and memory film unit. The hexagonal pattern has three axes of symmetry, in the same plane, about a point the array. The three axes are separated by substantially 60 degrees from one another. Hence, the memory holes **84** are arranged on a hexagonal grid which is also known as hexagonal tiling, bitruncated hexagonal tiling, or omnitruncated hexagonal tiling. Advantageously, hexagonal packing of the takes only about 87% of the area typically used by the same number of cells using standard rectangular layout shown in FIG. **14**A.

[0130] The memory holes **84** in the hexagonally tiled configuration of FIG. **14**C are staggered along each select gate **51**, **61** when viewed from the top. The hexagonally tiled configuration of FIG. **14**C provides a relaxed layout (i.e., larger pitch) for the select gates **51**, **61** compared to the layout of FIGS. **14**A and **14**B. However, the density of the array with the hexagonally tiled configuration of FIG. **14**C can be increased compared to the layout of FIGS. **14**A and **14**B, with the bit line **202** pitch reduced by a factor of 2 compared to the one in the layout of FIGS. **14**A and **14**B.

[0131] FIGS. **14**D and **14**E are respective side cross sectional views along lines A-A' and B-B' in FIG. **14**C of the CVNAND memory device with the hexagonally tiled memory hole **84** configuration. Line A-A' is a diagonal line through filled memory holes **84** located on bit lines **1**, **3**, **4** and **5**. Line B-B is a line along bit line **5**. In the example shown in FIG. **14**C, there are six bit lines (BL**1**, BL**2**, BL**3**, BL**4**, BL**5** and BL**6**) and three select gates **61** which form a 6×3 hexagonally tiled array of eighteen NAND strings between adjacent local interconnects **302**. Arrays having a configuration other than 6×3 may also be used as desired.

[0132] FIGS. **14**D and **14**E also illustrate the connector lines **351**, **361** for the respective lower select gates **51** and upper select gates **61** of the respective SGS **16**L and SGD **16**U select transistors. The lines **351**, **361** may comprise any suitable conductor, such as tungsten, and may connect the select gates to the driver/control circuits (not shown).

[0133] As shown in FIG. **14**D, the diameter of each memory hole **84** is labeled d**1** and the distance between adjacent memory holes **84** (along the diagonal line A-A' in FIG. **14**C) is labeled d**2**. The distance between adjacent memory holes **84** (along a given bit line, BL**5**, along the vertical line B-B' in FIG. **14**C) is $\sqrt{3}*(d1+d2)-d1$.

[0134] FIGS. **15**A to **15**H are schematic side cross sectional views of steps in the method of making the vertical pillar shaped channel type NAND memory device with one or more landing pads **25** shown in FIG. **2**A. In this method, a lower portion of the channel **1** is formed in the respective lower portion of the memory opening **84** in the lower portion of the stack. This is followed by forming the landing pad **25**, forming at least one additional portion of the stack, forming at least

one additional portion of the memory opening to expose the landing pad **25** and forming at least one additional portion of the channel **1** in the memory opening in contact with the landing pad **25**.

[0135] The method begins by forming the lower electrode **102**, such as by implanting a heavily doped diffusion region **102** in the upper surface **100***a* of the substrate **100**. For example, region **102** may comprise an n+ doped region in a p-type substrate **100**, as shown in FIG. **15**A. The conductivity types may be reversed if desired. Diffusion (doped) region **102** serves as a common source line of the lower select gate transistor to be formed in region **16**LS containing a sacrificial layer **1325** (e.g. a SiN layer).

[0136] The lower portion of the memory stack **120**L is then formed over the upper surface **100***a* of the substrate **100**. The stack contains alternating insulating layers **121**, such as silicon oxide layers, and sacrificial layers **132**, such as silicon nitride layers. A hard mask **27** is formed over the lower portion of the stack. The hard mask is patterned (e.g., by lithography) and is used as a mask to etch the lower portions of the memory openings **84***x* in the lower portion of the stack **120**L. The etching may comprise an RIE or another suitable etching. The hard mask **27** may then be removed or retained in the device. Alternatively, the hard mask is consumed during the etching process.

[0137] Then, the lower portion of the channels **1***x* are formed in the lower portion of the memory openings **84***x*, as shown in FIG. **15**B. The lower portion of the channels **1***x* may have a pipe shape as illustrated in FIG. **15**B, the center of which may be filled with an insulating material **2**. Alternatively, the memory openings **84***x* may be completely filled with semiconducting material to form the lower portions of the channels **1***x*. Any suitable formation method may be used, such as the method described above with respect to FIGS. **7-10**.

[0138] The landing pad **25** is then formed on top of the lower portion of the channel **1***x*, as shown in FIG. **15**C. The landing pad **25** may be formed using any suitable method, such as the method described above for forming the additional landing pad **25** with respect to FIGS. **6**C-**6**D.

[0139] For example, a semiconductor landing pad **25** may be epitaxially grown over the each lower portion of the channels **1***x* exposed in the lower portion of the stack **120**L, such that the landing pad has a larger width or diameter than an underlying lower portion of the channel **1***x*. The landing pad **25** formation may comprise epitaxially growing a "mushroom head" shaped overgrown silicon on exposed lower portions of the channels **1***x*. This silicon overgrowth is then covered by an insulating gap fill layer (e.g., silicon oxide or nitride). The silicon mushroom head and the gap fill layer are then planarized (e.g., by CMP) to form planar landing pads **25** on each portion of the channel **1***x* separated by an insulating gap fill **521**, as shown in FIG. **15**C.

[0140] Alternatively, the landing pads **25** may be formed by depositing a conductive or a doped semiconductor layer over the lower portion of the stack **120**L and then patterning the layer by lithography and etching to leave landing pads **25** having a larger width than that of the lower channel portion **1***x*. If the landing pads **25** are made of a doped semiconductor, then the landing pads **25** preferably have a higher doping concentration than the channel **1**.

[0141] As illustrated in FIG. **15**D, a lower portion of the word line cut or trench **86***x* may then be formed in the lower portion of the stack **120**L. This cut or trench **86***x* may be formed by photolithography and etching. The cut or trench **86***x* may be filled with a sacrificial or insulating material to protect it during subsequent processing. Alternatively, the portion of the cut or trench **86***x* is omitted and the entire cut or trench **86** is formed in a single etching step after all of the memory levels are completed. This completes the lower memory level of the NAND device.

[0142] Then, the above process may be repeated one or more times to form one or more additional memory levels over the lower memory level. As shown in FIG. **15**E, the process of FIGS. **15**A-**15**D is repeated for the middle portion of the stack **120**M. Specifically, the middle portion of the stack **120**M is formed over the landing pads **25** and the lower portion of the stack **120**L containing the lower portions of the channels **1***x*. Another hard mask is formed over the middle portion of the stack **120**M, and the middle portions of the memory openings **84***y* are etched into the middle portion of the stack **120**M to expose the landing pads **25**, as shown in FIG. **15**E. It should be noted that the lower **84***x* and middle **84***y* portions of each memory opening **84** may be partially or completely misaligned with each other, as long the landing pads **25** are exposed in respective middle portions of the memory openings **84***y*.

[0143] Then, the middle portion of the channels **1***y* are formed in the middle portions of the memory openings **84***y*, as shown in FIG. **15**E. The landing pad **25** is then formed on top of the middle portion of the channel **1***y*. The landing pad **25** may be formed using any suitable method, such as the method described above. As illustrated in FIG. **15**F, a middle portion of the word line cut or trench **86***y* may then be formed in the middle portion of the stack **120**M. This cut or trench **86***y* may be formed by photolithography and etching, and optionally filled with a sacrificial or insulating material. This completes the middle memory levels.

[0144] If desired, one or more additional middle or upper portions of the memory levels are then formed over the middle memory levels. As shown in FIGS. **15**E and **15**F, the process of FIGS. **15**A-**15**D is repeated for the upper portion of the stack **120**U. Specifically, the upper portion of the stack **120**U is formed over the landing pads **25** and the middle portion of the stack **120**M containing the middle portions of the channels **1***y*. Another hard mask is formed over the upper portion of the stack **120**U, and the upper portions of the memory openings **84***z* are etched into the upper portion of the stack **120**U to expose the landing pads **25**, as shown in FIG. **15**E. It should be noted that the middle **84***y* and upper **84***z* portions of each memory opening **84** may be partially or completely misaligned with each other, as long the landing pads **25** are exposed in respective upper portions of the memory openings **84***z*.

[0145] Then, the upper portion of the channels **1***z* are formed in the upper portions of the memory openings **84***z*, as shown in FIG. **15**E. The landing pad **25** is then formed on top of the upper portion of the channel **1***z*. The landing pad **25** may be formed using any suitable method, such as the method described above. The upper select transistor region **16**US may also be formed during this step or during a separate step.

[0146] As illustrated in FIG. **15**F, an upper portion of the word line cut or trench **86***z* is then formed in the upper portion of the stack **120**U. This cut or trench **86***z* may be formed by photolithography and etching. If the cut or trench portions **86***x*, **86***y* were filled with a sacrificial material, then the sacrificial material is removed at this time and the cut or trench may be subsequently refilled with an insulating material.

Alternatively, the entire cut or trench **86** is formed in a single etching step at this time through the entire stack **120** as illustrated in FIGS. **15**I-**15**J.

[0147] The memory films and the control gate electrodes are then formed in the entire stack **120** using a back side process (similar to the process shown in FIGS. **8**-**10**). First, as shown in FIG. **15**G, the sacrificial material layers **132** (such as the silicon nitride layers), are removed from the stack **120** through the cut or trench **86** using a selective wet etch to leave recesses **62** between the insulating layer **121** in the stack **120**. The memory film **13** (e.g., an ONO film) is then formed on the surface of the recesses **62** through the cut or opening **86**, as shown in FIG. **15**H. The control gate electrodes **3**, such as metal (e.g. W or Ti) and/or metal nitride, (e.g. WN or TiN) are then formed in the recesses **62** on the memory films **13** through the cut or opening **86**, as shown in FIG. **15**I.

[0148] In an alternative embodiment, the back side process shown in FIGS. **15**F-**15**I is performed on each portion of the stack between the channel and landing pad formation steps rather than on the entire stack. In this alternative method, after the lower portion of the channels **1***x* are formed in the lower stack portion **120**L in FIG. **15**B, the cut or trench **86***x* is formed in the lower portion of the stack **120**L and sacrificial material layers **132** are removed to leave recesses **62**. The recesses are then filled with the memory films **13** and the control gate electrodes **3**. The cut or trench **86***x* may be filled with an insulating or sacrificial material and the landing pads **25** are then formed on the lower portion of the channels **1***x*. The process then continues as shown in FIG. **15**E.

[0149] Then, after the middle portion of the channels **1***y* are formed in the middle stack portion **120**M in FIG. **15**E, the cut or trench **86***y* is formed in the middle portion of the stack **120**M and sacrificial material layers **132** are removed to leave recesses **62**. The recesses are then filled with the memory films **13** and the control gate electrodes **3**. The cut or trench **86***y* may be filled with an insulating or sacrificial material and the landing pads **25** are then formed on the middle portion of the channels **1***y*. The process then continues as shown in FIGS. **15**E-**15**H.

[0150] Then, after the upper portion of the channels **1***z* are formed in the upper stack portion **120**U in FIG. **15**H, the cut or trench **86***z* is formed in the upper portion of the stack **120**L and sacrificial material layers **132** are removed to leave recesses **62**. The recesses are then filled with the memory films **13**, the control gate electrodes **3** as well as the lower **16**LG and upper **16**UG select gate electrodes in the respective regions in **16**LS and **16**US to form the lower **16**L and upper **16**U select gate transistors. The cut or trench **86***z* may be filled with an insulating material **87**. This results in the device shown in FIG. **15**J.

[0151] After the control gate electrodes **3** are formed, either by the method of FIGS. **15**A-**15**J or by the alternative method described above, the bit line contact **202** is then formed in contact with the upper channel portion **1***z* as shown in FIG. **2**A or **15**K to complete the pillar shaped channel vertical NAND with landing pads **25**.

[0152] A similar method may be used to form the CVNAND of FIGS. **3**A-**14**E, as shown in FIGS. **16**A and **16**B. As shown in FIG. **16**A, the lower portion of the memory levels **70**L is formed over the lower select gate level **50**, which is formed using the methods shown in FIGS. **5**A-**6**D. The lower portion of the memory levels **70**L includes the lower portion of the memory stack **120**L. A hard mask is formed over the lower portion of the stack. The hard mask is patterned (e.g., by lithography) and is used as a mask to etch the lower portions of the memory openings **84***x* in the lower portion of the stack **120**L. The etching may comprise an RIE or another suitable etching. The hard mask may then be removed or retained in the device. Alternatively, the hard mask is consumed during the etching process.

[0153] Then, the lower portions of the memory films **13***x* and the channel **1***x* are formed in the lower portions of the memory openings **84***x* as shown in FIG. **16**A. Any suitable formation method may be used, such as the method described above with respect to FIGS. **7**-**10** or the front side method described below with respect to FIGS. **17**A-**17**H. The landing pad **25** is then formed on top of the lower portion of the channel **1***x*. The landing pad **25** may be formed using any suitable method, such as the method described above. This completes the lower memory levels **70**L of the NAND device.

[0154] Then, the above process may be repeated one or more times to form one or more additional memory levels **70**U over the lower memory levels **70**L. As shown in FIG. **16**B, the process of FIG. **16**A is repeated for the upper portion of the stack **120**U. Specifically, the upper portion of the stack **120**U is formed over the landing pads **25** and the lower portion of the stack **120**L containing the lower portions of the channels **1***x*. Another hard mask is formed over the upper portion of the stack **120**U, and the upper portions of the memory openings **84***z* are etched into the upper portion of the stack **120**U to expose the landing pads **25**. It should be noted that the lower **84***x* and upper **84***z* portions of each memory opening **84** may be partially or completely misaligned with each other, as long the landing pads **25** are exposed in respective upper portions of the memory openings **84***z*.

[0155] Then, the upper portions of the memory films **13***z* and the channel **1***z* are formed in the upper portions of the memory openings **84***z* as shown in FIG. **16**B. The upper select transistor level **60** is then formed over the upper memory levels **70**U using the method shown in FIGS. **11**A-**12**B. A similar method to the one described in FIGS. **15**A-**15**F and **16**A-**16**B may be used to form other vertical NAND devices with landing pads, such as P-BiCS type devices.

[0156] FIGS. **17**A through **17**H illustrate another embodiment of making 3D vertical NAND devices. Specifically, FIGS. **17**A-**17**H illustrate a method of overcoming misalignment of the memory holes in making NAND memory devices that have at least two memory stacks. In this embodiment method, lower portions of the memory openings **84***x* are formed in the lower portion of the stack **120**L. This is followed by filling the lower parts **84***s* of the lower portions of the memory openings **84***x* with a sacrificial material **31**, and widening the remaining exposed top parts **84***t* of the of the lower portions of the memory openings **84***x* where the landing pad **25** will be subsequently formed. The widened part **84***t* is then filled with a sacrificial material. Then, at least one additional portion of the stack **120**U is formed over the lower portion of the stack **120**L. At least one additional portion (e.g., the upper portions) of the memory openings **84***z* are formed in the additional portion of the stack **120**U to expose the sacrificial material in part **84***t* of the lower portions of the memory openings **84***x*. Then, the sacrificial material is removed from the entire opening **84** and the entire memory films **13** are formed in the memory openings **84** followed by forming the entire channels **1** and the landing pads **25** in the memory openings **84** in the same growth step (e.g., CVD growth step). Thus, in this method, the entire channel **1** (including landing pads **25** built into the channel **1**) is formed in one step rather

than in plural steps by using the sacrificial material to temporarily fill the memory opening portion **84***x*.

[0157] As shown in FIG. **17**A, a lower portion of the stack **120**L of alternating layers **3**, **121** is formed over the major surface **100***a* of the substrate **100**. Layers **3**, **121** may be deposited over the substrate by any suitable deposition method, such as sputtering, CVD, PECVD, MBE, etc. The layers **3**, **121** may be 6 to 100 nm thick. The substrate **100** may contain a sacrificial material region **29**, such as a carbon or other suitable material.

[0158] The lower portion of the stack **120**L may be covered with an optional cap layer of insulating material **123**. The cap layer **123** is preferably thicker than layers **3**, **121**. For example, layer **123** may be 50-200 nm thick, such as 60-75 nm thick. The cap layer may comprise a silicon oxide layer, such as a silicon oxide layer formed by CVD using a TEOS precursor.

[0159] In this embodiment, the first layers **121** comprise an electrically insulating material, such as silicon oxide, silicon nitride, high-k dielectric (e.g., organic or inorganic metal oxide), etc. The second layers **3** comprise control gate material layers rather than the sacrificial material layers **132**. The control gate material may comprise any one or more suitable conductive or semiconductor control gate material known in the art, such as doped polysilicon or a metal, such as tungsten, copper, aluminum, tantalum, titanium, cobalt, titanium nitride or alloys thereof. Thus, the stacks **120** in the pillar shaped channel, P-BiCS and/or CVNAND type devices may comprise alternating insulating **121** and sacrificial **132** layers (in the "back-side" process where the sacrificial material layers **132** are removed from the stack and the memory films **13** and control gate electrodes **3** are formed in place of layers **132** through the back side cut and recesses) or alternating insulating **121** and control gate **3** material layers (in a process where the control gate material layers are part of the initial stack and the memory film is formed through the memory holes **84**).

[0160] The deposition of layers **3**, **121** is followed by etching the lower stack portion **120**L to form a plurality of lower portions of the memory openings **84***x*. Then, as shown in FIG. **17**B, the etch is continued into the sacrificial material region **29** to remove the sacrificial material and leave a connecting opening **30** which connects two adjacent lower portions of memory openings **84***x*. The openings **84***x* will eventually contain the two wing portions **1***a* and **1***b* of the U-shape semiconductor channel which extend substantially perpendicular to the major surface **100***a* of the substrate **100**, and the connecting opening **30** will contain the connecting portion **1***c* of the U-shape semiconductor channel **1** which connects the two wing portions **1***a*, **1***b* and which extends substantially perpendicular (i.e., horizontally) to the major surface **100***a* of the substrate **100**.

[0161] As shown in FIG. **17**C, the lower parts **84***s* of the lower portions of the memory openings **84***x* and the connecting opening **30** are filled with a sacrificial material **31**. The sacrificial material may comprise any material which may be selectively etched compared to the materials of layers **3** and **121** and the material of the substrate **100**. For example, for a silicon substrate **100**, polysilicon control gate material layers **3** and silicon oxide layers **121**, the sacrificial material **31** may comprise carbon, such as amorphous carbon. However, any other material may also be used.

[0162] Then, as shown in FIG. **17**D, the remaining exposed top parts **84***t* of the lower portions of the memory openings **84***x* are widened such that the top parts **84***t* have a larger width (e.g., larger diameter) than the bottom part **84***s*. Preferably, the width (e.g., diameter) of the top part **84***t* is the same as the intended width (e.g., diameter) of the landing pad **25** which will be subsequently formed in the top part **84***t*. The widening may be performed by isotropically etching the cap layer **123** without substantially etching the sacrificial material **31** in the lower parts **84***s* of the lower portions of the memory openings **84***x*. The widened top parts **84***t* are then refilled with the sacrificial material **31***a*. Material **31***a* may be the same or different from material **31**. Material **31***a* may be recessed to the top of the cap layer **123** by CMP or etchback.

[0163] Then, at least one additional portion of the stack (e.g., the upper portion of the stack) **120**U is formed over the lower portion of the stack **120**L, as shown in FIG. **17**E. The additional portion of the stack **120**U may also comprise alternating layers **3** and **121** described above. At least one additional portion (e.g., the upper portions) of the memory openings **84***z* are formed in the additional portion of the stack **120**U to expose the sacrificial material **31***a* in the top part **84***t* of the lower portions of the memory openings **84***x*. If desired, the upper portions of the memory openings **84***z* may be intentionally or unintentionally misaligned with the lower parts **84***s* of the lower portions of the memory openings **84***x*, as long as the upper portions of the memory openings **84***z* expose a portion of the sacrificial material **31***a* in the widened top parts **84***t* of the lower portions of the memory openings **84***x*.

[0164] As shown in FIG. **17**F, the sacrificial material **31**, **31***a* is removed from the entire memory opening **84** (i.e., from both parts **84***s* and **84***t*). This may be performed by selectively etching away the sacrificial material in the memory opening. This forms the continuous memory openings **84** that extend through both the lower **120**L and upper **120**U portions of the stack **120**. Each memory opening **84** includes portions **84***z* and **84***x* (which is made up of parts **84***s* and **84***t*) and the connecting opening **30**.

[0165] The entire memory films **13** are then formed in the memory openings **84** in the entire stack, as shown in FIG. **17**G. The memory films **13** are formed as hollow cylinders around the sidewalls of the openings **84**.

[0166] This is followed by forming the entire U-shaped channels **1** and the landing pads **25** in the memory openings **84** in the same growth step inside the hollow memory film **13** cylinder. The two wing portions **1***a* and **1***b* of the U-shape semiconductor channel **1** extend substantially perpendicular to the major surface **100***a* of the substrate **100** in portions **84***z*, **84***x* of the memory openings, and the connecting portion **1***c* of the U-shape semiconductor channel **1** which connects the two wing portions **1***a*, **1***b* extends substantially perpendicular (i.e., horizontally) to the major surface **100***a* of the substrate **100** in the connecting opening **30**. In this embodiment, the landing pad **25** may be relatively thick and contact dummy control gates **3***d*, as shown in FIG. **17**G. Dummy control gates **3***d* (i.e., dummy word lines) are not connected to outside control circuitry and are not provided with a current or voltage during NAND operation.

[0167] A slit trench or cut **86**A is then formed between the select gates **3** and the wings or arms of the U-shaped channel **1**, as shown in FIG. **17**H. The slit trench or cut **86** may be etched until the etch stop layer **89** shown in FIG. **2**B is reached during the etching. The trench or cut **86**A may be filled with an insulating material **87**, such as silicon nitride. The select gate transistors **16**, the source line **102** and the bit line **202** are then formed above the device, as shown in FIG. **2**B. Option-

ally, the substrate may include a body contact gate (e.g. bottom gate) **91** located adjacent to the connecting portion **1***c* of the U-shape semiconductor channel **1**, as shown in FIG. **2**B.

[0168] If desired, the substrate may comprise a silicon on insulator type substrate containing one or more insulating layers **93** (e.g., silicon oxide/silicon nitride/silicon oxide stack) over a silicon wafer, as shown in FIG. **2**B.

[0169] In another embodiment of the present disclosure, the vertical NAND devices described above (e.g., pillar shaped channel, P-BiCS or CVNAND type devices) may have a channel **1** comprising a mixed metal oxide semiconductor material. The devices with the mixed metal oxide semiconductor channel may include the landing pads **25** and be made by the sequential stack etching process described above. Alternatively, the vertical NAND devices with the oxide semiconductor channel may exclude the landing pad and have the entire memory holes etched in one step (e.g., such as the devices shown in FIGS. **1**A and **1**B).

[0170] Any suitable mixed metal oxide semiconductor material may be used. For example, the mixed metal oxide semiconductor comprises at least one first transition metal and at least one second metal selected from Group IIIA of the Periodic Table of Elements. The mixed metal oxide semiconductor my comprise one first transition metal from Group IIB (also known as Group 12) of the Periodic Table of Elements and two metals selected from Group IIIA (also known as Group 13) of the Periodic Table of Elements. Preferably, the mixed metal oxide comprises indium gallium zinc oxide (stoichiometric InGaZnO4 or non-stoichiometric material). Other mixed metal oxide semiconductors, such as zinc tin oxide (stoichiometric ZnSnO3 or non-stoichiometric material) or indium zinc oxide may also be used. The mixed metal oxide channels have a low leakage current and may be deposited at a low temperature (e.g., below 300 C, such as 100-270 C) into high aspect ratio memory holes **84** using atomic layer deposition (ALD) or other suitable methods.

[0171] FIGS. **18**A to **18**F are side cross sectional views of steps in the method of making the NAND memory device according to another embodiment. This embodiment includes a lower stack **120**L of alternating control gate electrodes **3** and dielectric fill material **121** provided over a substrate **100**. In an embodiment, the device includes an etch stop layer **89** located between a top surface of the substrate **100** and the stack **120**L. As discussed in the previous embodiment, an optional sacrificial material region **29** which may be used to form a horizontal portion of a U-shaped channel **1** may also be provided.

[0172] Next, an optional slit trench may be etched to the etch stop layer **89** between the wings or arms of the U-shaped channel **1** and filled with a dielectric **87** as illustrated in FIG. **18**B. Memory openings may then be etched through the stack **120** and the etch stop layer **89** to the sacrificial material region **29**. The sacrificial material in sacrificial material region **29** is removed and the memory films (i.e. the blocking dielectric layer **7**, charge storage regions **9**, and tunnel dielectric **11**) and channels **1** are formed in the memory openings as illustrated in FIG. **18**C.

[0173] Next, as illustrated in FIG. **18**D, a first insulating layer **121**A, such as an oxide, is deposited over the stack **120**L. A conducting or semiconducting current boosting layer **1801** is deposited over the insulating layer **121**A. The current boosting layer **1801** may be a metal (e.g. tungsten or titanium), metal nitride, (e.g. WN or TiN), silicide or highly doped polysilicon (e.g., dopant concentration of at least 1018 cm-3). A second insulating layer **121**B (e.g., silicon oxide) is then deposited over the current boosting layer **1801**. As illustrated in FIG. **18**E, a mask, such as a photoresist mask, may be applied to the surface of the second insulating layer **121**B and patterned. Portions of the second insulating layer **121**B, the current boosting layer **1801** and the first insulating layer **121**A located over the memory holes may be removed by etching. A conducting or semiconducting material may then be deposited in the etched portion of the mask to form thick landing pads **25**. That is, landing pads **25** may have a thickness greater than the thickness of the current boosting layer **1801** (e.g. 10-200% thicker, such as 50-100% thicker). The thick landing pads **25** are in electrical contact with both the current boosting layer **1801** and the channel **1**. Alternatively, the current boosting layer **1801** may be thicker or the same thickness as the landing pads **25**. Current flow in the NAND device can be boosted by applying a voltage to the current boosting layer **1801**.

[0174] Next, as illustrated in FIG. **18**F, the mask may be removed and a second, upper stack **120**U of alternating control gate electrodes **3** and dielectric fill material **121** may be deposited over the second insulating layer **121**B and the thick landing pads **25**. The optional slit trench may then be extended through the upper stack **120**U by etching to form a slit trench through the upper stack, the current boosting layer and the first and second insulating layers sandwiching the current boosting layer to the filled slit trench in the lower stack and filling the slit trench with a dielectric. After completing the filled slit trench, the select gates **16** may be formed over the upper stack **120**U.

[0175] FIG. **18**G illustrates another embodiment of a vertical NAND device with a current boosting layer **1801** and landing pad **25**. Unlike the vertical NAND device illustrated in FIGS. **18**A-**18**F which have a "U" shaped channel **1**, the vertical NAND device illustrated in FIG. **18**G has a single vertical pillar shaped channel. The vertical NAND device illustrated in FIG. **18**G includes a lower select gate electrode **16**L located proximal to the substrate **100** under the memory cells and the control gate electrodes, and an upper select gate electrode **16**U located over the memory cells and the control gate electrodes. As in the previous embodiment, the vertical NAND device of this embodiment may have more than two stacks **120** of alternating control gate electrodes **3** and dielectric fill material **121**. Further, if the vertical NAND device includes more than two stacks **120**, then the device may have more than one current boosting layer **1801** (e.g. if the vertical NAND device has three stacks **120**L, **120**M, **120**U, then the device may include a current boosting layer **1801** between the lower stack **120**L and the middle stack **120**M and a current boosting layer **1801** between the middle stack **120**M and the upper stack **120**L).

[0176] The current boosting layer **1801** is electrically connected to a voltage or current source and to the landing pad embedded in the semiconductor channel. In operation of the vertical NAND device, current or voltage may be applied to the current boosting layer **1801** during at least one of a read, program or erase steps of the vertical NAND device. In this manner, additional current or voltage may be provided to an interface region containing the landing pad between the upper and lower stacks **120**U, **120**L (and any intermediate stacks **120**, if provided). The applied current or voltage assists in charge carrier (e.g., electron or hole) flow through the landing pad and the interface region. The additional current or voltage improves operation of the device (e.g. provides additional current flow between the select transistors **16**L, **16**U in each

memory string), thereby increasing the reliability of operation by ensuring that sufficient current or voltage is available for proper operation of the stacks **120** of memory device levels in the NAND device.

[0177] FIGS. **19**A to **19**D illustrate a method of making the NAND memory device according to another embodiment. FIG. **19**E is a schematic circuit diagram of the device of FIG. **19**D. In this embodiment, at least one landing pad is located between a select gate electrode and an end control gate electrode in the stack. For example, the select gate electrode may comprise an upper select gate electrode and the end control gate electrode may comprise a top control gate electrode in the stack, and/or the select gate electrode may comprise a lower select gate electrode and the end control gate electrode may comprise a bottom control gate electrode in the stack.

[0178] As illustrated in FIG. **19**A, this embodiment includes a stack **120** of alternating control gate electrodes **3** and dielectric fill material **121** provided over a substrate **100**. In an embodiment, the substrate **100** may comprise a silicon on insulator type substrate containing one or more insulating layers **93** (e.g., silicon oxide/silicon nitride/silicon oxide stack) over a silicon wafer, as shown in FIG. **19**A. Additionally, the substrate may include a bottom gate **91**. To protect the bottom gate **91** during subsequent processing, an etch stop layer **89** may be provided between the bottom gate **91** and the stack **120**.

[0179] In previous embodiments, landing pads **25** were provided between memory stacks **120**. In this embodiment, the device includes at least one semiconductor or electrically conductive landing pad **2001** located between the stack(s) **120** of alternating control gate electrodes **3** and dielectric fill material **121** and at least one select gate electrode **16**. Preferably, the landing pad **2001** is located between an upper select gate electrode **16** and an upper most control gate electrode **3** in the stack **120**. Alternatively, or in addition the landing pad **2001** may be located between the lower select gate electrode (e.g., **16**L in FIG. **18**G) and the lower most control gate electrode **3** in a vertical NAND string having a single vertical pillar channel, such as the string shown in FIG. **18**G. In an embodiment, a landing pad **2001** is provided between at least one of (1) the source select gate electrode **16**S and the first and the second control gate electrodes **3** and (2) the drain select gate electrode **16**D and the first and the second control gate electrodes **3**. Preferably, landing pads **2001** are provided for both the source select transistor **2003** channel **1**S and the drain select transistor **2005** channel **1**D for embodiments with U-shaped channels as illustrated in FIGS. **19**B-**19**E. For NAND strings with a vertical channel (e.g., such as the strings shown in FIGS. **2**A and **3**A), one landing pad **2001** is shown as being provided for the channel of the upper select gate transistor (which may be either the source select transistor or the drain select transistor, depending on the direction of the current flow). Landing pad **2001** allows optimization of the select transistor **16** separate from the rest of the memory string which may improve the inhibit performance of the NAND string. The landing pad **2001** in or below the select gate transistor may be used instead of or in addition to the landing pads **25** located in the stack **120** between control gate electrodes **3**, as described above.

[0180] As illustrated in FIG. **19**B, after the memory holes **84** filled are with blocking dielectric layer **7**, charge storage material **9**, tunnel dielectric **11** and channel **1**, the surface may be planarized, such as with CMP. A layer of conducting material, such as a metal (e.g. W or Ti), metal nitride (e.g. WN or TiN), silicide or doped polysilicon may be deposited over the stack **120**. The layer of conducting material is then patterned to form the landing pads **2001** over the memory holes **84**. A layer of dielectric fill material **121**A is then deposited over the stack **120** and the landing pads **2001**. CMP may then be performed to remove excess material **121**A and expose the top surface of the landing pads **2001**. Alternatively, layer **121**A may be deposited first, followed by formation of a landing pad opening in layer **121**A, filling the opening with the landing pad **2001** material and optional planarization of the landing pad material with the upper surfaces of layer **121**A.

[0181] As illustrated in FIGS. **19**C and **19**D, the source and drain side select transistors **2003**, **2005** (or the upper select transistor **16**U for a CVNAND) may then be formed. In the embodiment illustrated in FIGS. **19**C and **19**D, the transistor channels are formed by a non-damascene process. In this embodiment, a layer of channel material is deposited over the dielectric fill material **121**A and the exposed landing pads **2001**. Pillar shaped channels **1**S, **1**D are formed on top of the landing pads **2001** by patterning the layer of channel material (e.g., by photolithography and etching).

[0182] Next, a gate insulating layer **11**A is formed on the sidewalls of the pillar shaped channels **1**S, **1**D. The gate insulating layer **11**A may be formed by oxidizing the exposed channel sidewalls to form a high quality grown silicon oxide. The top of the channels may be either masked or left unmasked and oxidized. If the top of the channels is oxidized, then the oxide on the top of the channels is removed in a subsequent step. Alternatively, the gate insulating layer **11**A may be formed by depositing a layer of silicon oxide, silicon nitride, a combination thereof or another insulating material over the pillar shaped channels.

[0183] Next, an optional insulating layer (e.g., the upper portion of insulating layer **121**A) and a layer of conducting or doped semiconductor material (e.g., in-situ doped polysilicon) are deposited around the pillar shaped channels **1**S, **1**D and the gate insulating layer **11**A and patterned to form the select gates **16**S, **16**D (or **16**U for a vertical channel string). The patterning may utilize a sacrificial or etch stop layer which is subsequently removed. A second insulating layer **121**B is then formed over the select gates and the top of the channels is subsequently exposed in the layer **121**B by planarization and/or photolithography and etching.

[0184] Dielectric filled slit trench regions **187** and the select gate separation openings **287** are formed by etching the select gate layer and filling the etched trenches and openings with an insulating material (e.g., silicon nitride), as shown in FIG. **19**D. This separates the select gate layer into the source and drain select gates **16**S, **16**D.

[0185] As shown in FIG. **19**D, bit lines **202** and the source lines **102** (for the U-shaped embodiment) can be fabricated in contact with the select gate transistor channels **1**D, **1**S as discussed above to complete the NAND string device. If desired, barrier, contact or adhesion regions (e.g., Ti, TiN, metal silicide, etc.) **2007** may be formed between the lines **102**, **202** and the respective channels **15**, **1**D. For example, regions **2007** may comprise metal silicide regions (e.g., titanium silicide or tungsten silicide) formed by contacting the top of the channels with a metal layer and annealing to form the silicide, This step is followed by forming the lines **102** and **202** in contact with the silicide regions **2007**. Regions **2007**

may be formed before forming the regions **187**, **287**, while lines **102**, **202** may be formed after forming the regions **187**, **287**.

[0186] In an alternative embodiment, the select gates transistor may be formed using a damascene process. In the damascene process, rather than deposit and pattern a layer of channel material, the channel is formed by depositing a channel material and gate insulating layer into an opening in a mini-stack of layers **121**A, **16**S/**16**D, **121**B.

[0187] In another embodiment shown in FIGS. **20**A-**20**J, a different method is used to form the P-BiCS type vertical NAND devices, from that illustrated in FIGS. **17**A through **17**H. As illustrated in FIG. **20**A, this embodiment includes a stack **120** of alternating control gate electrodes **3** (e.g. polysilicon) and dielectric fill material **121** (e.g. SiO2) provided over a substrate. In an embodiment, the substrate may comprise a silicon on insulator type substrate containing one or more insulating layers **93** (e.g., silicon oxide/silicon nitride/silicon oxide stack) over a silicon wafer, as shown in FIG. **20**A. Additionally, the substrate may include a bottom gate **91**. To protect the bottom gate **91** during subsequent processing, an etch stop layer **89** (e.g. SiN) may be provided between the bottom gate **91** and the stack **120**. A hard mask **27**A (e.g. SiN, amorphous carbon, etc.) is formed over the stack **120**.

[0188] As illustrated in FIG. **20**B, slit trenches **86** are formed in the stack **120** and filled with dielectric **87** using a patterned mask (e.g. patterned hard mask **27**A) which is then removed. Preferably, the slit trenches end at the etch stop layer **89**. In the next step illustrated in FIG. **20**C, the upper most insulating layer **121** in the stack **120** is preferentially etched to reduce its thickness while leaving the dielectric **87** essentially unetched. Another hard mask **27**B is then deposited over the upper most insulating layer **120** and the exposed dielectric layer **87**.

[0189] Next, as illustrated in FIG. **20**D, memory holes are etched and the sacrificial material region **29** is removed. The memory holes are then filled with blocking dielectric layer **7**, charge storage material **9**, tunnel dielectric **11** and channel **1**. Additionally, another layer of insulating material **121** is deposited to cover the memory holes and the exposed dielectric **87**. A CMP process may then be used to planarize the surface of the stack **120** and to expose a top surface of the dielectric **87**.

[0190] As illustrated in FIG. **20**E, holes may be etched in the top insulating layer **121** to expose the top surfaces of the blocking dielectric layer **7**, charge storage material **9**, tunnel dielectric **11** and channel **1** in the memory holes. A conducting or semiconducting material may then be deposited in the holes to form landing pads **25** on top of the blocking dielectric layer **7**, charge storage material **9**, tunnel dielectric **11** and channel **1**. Again, another layer of insulating material **121** is deposited to cover the landing pads **25** and the exposed dielectric **87**. A CMP process may then be used to planarize the surface of the stack **120** and to expose a top surface of the dielectric **87**.

[0191] Next, as illustrated in FIG. **20**F, a second, middle stack **120**M of alternating control gate electrodes **3** and dielectric fill material **121** is deposited over the lower stack **120**L of alternating control gate electrodes **3** and dielectric fill material **121**. Memory holes **84***y* and slit trenches **86** are formed in the middle stack **120**M as illustrated in FIG. **20**G. The memory holes **84***y* are etched until the surface of the landing pads **25** are exposed. The slit trenches **86** are etched until the upper surface of the dielectric **87** in the lower slit trenches **86** are exposed. Next, both the memory holes **84***y* and the slit trenches **86** are filled with a dielectric material **87**, such as silicon nitride.

[0192] As illustrated in FIG. **20**H, the top layer of dielectric fill material **121** on the middle stack **120**M is partially removed to form exposed pillars of dielectric material **87** above the memory holes **84***y* and the slit trenches **86**. A hard mask **27**C is then deposited over the top layer of dielectric fill material **121** and the exposed pillars of dielectric material. Next, as illustrated in FIG. **20**I, the hard mask **27**C is patterned to form holes exposing the dielectric material in the memory holes. The dielectric material **87** in the memory holes is removed through the holes in the hard mask **27**C. Next, blocking dielectric layer **7**, charge storage material **9**, tunnel dielectric **11** and channel **1** are deposited in the memory holes. After filling the memory holes, a layer of dielectric material **121** is deposited over the middle stack **120**M. A CMP process may then be used to planarize the surface of the middle stack **120**M and the expose the surface of the dielectric material **87** in the slit trenches **86** in the middle stack **120**M.

[0193] Next, as illustrated in FIG. **20**J, the top layer of dielectric material **121** on the stack **121**M may be patterned and etched with holes to expose the top surfaces of the blocking dielectric layer **7**, charge storage material **9**, tunnel dielectric **11** and channel **1** in the memory holes. Landing pads **25** may then be formed on the top of the blocking dielectric layer **7**, charge storage material **9**, tunnel dielectric **11** and channel **1** in the memory holes in the middle stack **120**M by depositing a conducting or semiconducting material in the holes in the patterned top layer of dielectric material **121**. Additional memory stacks **120** as desired may be formed by repeating the steps above. After forming the last desired memory stack, source lines **102** and bit lines **202** may be formed as described in regards to the embodiment illustrated in FIG. **19**D.

[0194] Referring to FIG. **21**, an exemplary structure according to an embodiment of the present disclosure is illustrated, which can be employed, for example, to fabricate a device structure containing vertical NAND memory devices. The exemplary structure includes a substrate, which can be a semiconductor substrate. The substrate can include a substrate semiconductor layer **10**. The substrate semiconductor layer **10** can be a semiconductor material layer, and can include at least one elemental semiconductor material, at least one III-V compound semiconductor material, at least one II-VI compound semiconductor material, at least one organic semiconductor material, or other semiconductor materials known in the art. The substrate semiconductor layer **10** can comprise a single crystalline semiconductor material, such as a single crystal silicon wafer.

[0195] As used herein, a "semiconductor material" refers to a material having electrical conductivity in the range from 1.0×10^{-6} S/cm to 1.0×10^{5} S/cm, and is capable of producing a doped material having electrical conductivity in a range from 1.0 S/cm to 1.0×10^{5} S/cm upon suitable doping with an electrical dopant. As used herein, an "electrical dopant" refers to a p-type dopant that adds a hole to a valence band within a band structure, or an n-type dopant that adds an electron to a conduction band within a band structure. As used herein, a "conductive material" refers to a material having electrical conductivity greater than 1.0×10^{5} S/cm. As used herein, an "insulating material" or a "dielectric material" refers to a material having electrical conductivity less than 1.0×10^{-6} S/cm. All measurements for electrical conductivities are

made at the standard condition. Optionally, at least one doped well (not expressly shown) can be formed within the substrate semiconductor layer **10**. While the substrate semiconductor layer **10** is alternatively referred to as the substrate **10** in the present disclosure, it is understood that the substrate **10** may optionally include additional material layers (such as a handle substrate and a buried insulator layer as in the case of a semiconductor-on-insulator substrate).

[0196] The exemplary structure includes a device region, in which memory devices can be subsequently formed, and a contact region (not shown), in which stepped surfaces are subsequently formed. As used herein, a "contact region" refers to a region in which contact via structures are to be formed. At least one semiconductor device for a peripheral circuitry can be formed in a peripheral device region (not shown). The at least one semiconductor device can include, for example, one or more field effect transistors. The least one semiconductor device for the peripheral circuitry can contain a driver circuit for memory devices to be subsequently formed, which can include at least one NAND device.

[0197] Optionally, a doped semiconductor well (not separately shown) can be provided in an upper portion of the substrate semiconductor layer **10**. The doped semiconductor well can be formed, for example, by implantation of electrical dopants (p-type dopants or n-type dopants) into an upper portion of the substrate semiconductor layer **10**, or by deposition of a single crystalline semiconductor material, for example, by selective epitaxy. In one embodiment, the doped semiconductor well can include a single crystalline semiconductor material (e.g., p-well).

[0198] An alternating stack of first material layers and second material layers is subsequently formed. Each first material layer can include a first material, and each second material layer can include a second material that is different from the first material. The alternating stack is herein referred to as a first alternating stack. In one embodiment, the first material layers and the second material layers can be first insulating layers **131** and first sacrificial material layers **142**, respectively. In one embodiment, each first insulating layer **131** can include a first insulating material, and each first sacrificial material layer **142** can include a first sacrificial material. The alternating stack formed by the first insulating layers **131** and the first sacrificial material layers **142** is herein referred to as a first tier structure (**131**, **142**), or a first tier structure (**131**, **142**). Thus, the first tier structure (**131**, **142**) can include an alternating plurality of first insulating layers **131** and first sacrificial material layers **142**. As used herein, a "sacrificial material" refers to a material that is removed during a subsequent processing step.

[0199] As used herein, an alternating stack of first elements and second elements refers to a structure in which instances of the first elements and instances of the second elements alternate. Each instance of the first elements that is not an end element of the alternating plurality is adjoined by two instances of the second elements on both sides, and each instance of the second elements that is not an end element of the alternating plurality is adjoined by two instances of the first elements on both ends. The first elements may have the same thickness thereamongst, or may have different thicknesses. The second elements may have the same thickness thereamongst, or may have different thicknesses. The alternating plurality of first material layers and second material layers may begin with an instance of the first material layers or with an instance of the second material layers, and may end with an instance of the first material layers or with an instance of the second material layers. In one embodiment, an instance of the first elements and an instance of the second elements may form a unit that is repeated with periodicity within the alternating plurality.

[0200] The first tier structure (**131**, **142**) can include first insulating layers **131** composed of the first material, and first sacrificial material layers **142** composed of the second material, which is different from the first material. The first material of the first insulating layers **131** can be at least one insulating material. Insulating materials that can be employed for the first insulating layers **131** include, but are not limited to silicon oxide (including doped or undoped silicate glass), silicon nitride, silicon oxynitride, organosilicate glass (OSG), spin-on dielectric materials, dielectric metal oxides that are commonly known as high dielectric constant (high-k) dielectric oxides (e.g., aluminum oxide, hafnium oxide, etc.) and silicates thereof, dielectric metal oxynitrides and silicates thereof, and organic insulating materials. In one embodiment, the first material of the first insulating layers **131** can be silicon oxide.

[0201] The second material of the first sacrificial material layers **142** is a sacrificial material that can be removed selective to the first material of the first insulating layers **131**. As used herein, a removal of a first material is "selective to" a second material if the removal process removes the first material at a rate that is at least twice the rate of removal of the second material. The ratio of the rate of removal of the first material to the rate of removal of the second material is herein referred to as a "selectivity" of the removal process for the first material with respect to the second material.

[0202] The first sacrificial material layers **142** may comprise an insulating material, a semiconductor material, or a conductive material. The second material of the first sacrificial material layers **142** can be subsequently replaced with electrically conductive electrodes which can function, for example, as control gate electrodes of a vertical NAND device. Non-limiting examples of the second material include silicon nitride, an amorphous semiconductor material (such as amorphous silicon), and a polycrystalline semiconductor material (such as polysilicon). In one embodiment, the first sacrificial material layers **142** can be material layers that comprise silicon nitride.

[0203] In one embodiment, the first insulating layers **131** can include silicon oxide, and sacrificial material layers can include silicon nitride sacrificial material layers. The first material of the first insulating layers **131** can be deposited, for example, by chemical vapor deposition (CVD). For example, if silicon oxide is employed for the first insulating layers **131**, tetraethylorthosilicate (TEOS) can be employed as the precursor material for the CVD process. The second material of the first sacrificial material layers **142** can be formed, for example, CVD or atomic layer deposition (ALD).

[0204] The thicknesses of the first insulating layers **131** and the first sacrificial material layers **142** can be in a range from 20 nm to 50 nm, although lesser and greater thicknesses can be employed for each first insulating layer **131** and for each first sacrificial material layer **142**. The number of repetitions of the pairs of a first insulating layer **131** and a first sacrificial material layer **142** can be in a range from 2 to 1,024, and typically from 8 to 256, although a greater number of repetitions can also be employed. In one embodiment, each first sacrificial material layer **142** in the first tier structure (**131**,

142) can have a uniform thickness that is substantially invariant within each respective first sacrificial material layer **142**.

[0205] A dielectric cap layer **170** can be sequentially formed. The dielectric cap layer **170** includes a dielectric material, which can be any dielectric material that can be employed for the first insulating layers **131**. In one embodiment, the dielectric cap layer **170** includes the same dielectric material as the first insulating layers **131**. The thickness of the dielectric cap layer **170** can be in a range from 20 nm to 400 nm, although lesser and greater thicknesses can also be employed.

[0206] Optionally, the dielectric cap layer **170** and the first tier structure (**131**, **142**) can be patterned to form first stepped surfaces in a contact region (not shown). The contact region includes a first stepped area in which the first stepped surfaces are formed, and a second stepped area in which additional stepped surfaces are to be subsequently formed in an second tier structure (to be subsequently formed over the first tier structure). The first stepped surfaces can be formed, for example, by forming a mask layer with an opening therein, etching a cavity within the levels of the dielectric cap layer **170**, and iteratively expanding the etched area and vertically recessing the cavity by etching each pair of a first insulating layer **131** and a first sacrificial material layer **142** located directly underneath the bottom surface of the etched cavity within the etched area. A dielectric material can be deposited to fill the first stepped cavity to form a first retro-stepped dielectric material portion (not shown). As used herein, a "retro-stepped" element refers to an element that has stepped surfaces and a horizontal cross-sectional area that increases monotonically as a function of a vertical distance from a top surface of a substrate on which the element is present. The first tier structure can comprise the first alternating stack (**131**, **142**) and the first retro-stepped dielectric material portion.

[0207] Referring to FIG. **22**, first memory openings **121** extending to a top surface of the substrate **10** are formed through the first tier structure (**131**, **142**). The first memory openings **121** can be formed in the device region. For example, a lithographic material stack (not shown) including at least a photoresist layer can be formed over the dielectric cap layer **170**, and can be lithographically patterned to form openings within the lithographic material stack. The pattern in the lithographic material stack can be transferred through the dielectric cap layer **170** and through the entirety of the first tier structure (**131**, **142**) by at least one anisotropic etch that employs the patterned lithographic material stack as an etch mask. Portions of the dielectric cap layer **170** and the first tier structure (**131**, **142**) underlying the openings in the patterned lithographic material stack are etched to form the first memory openings **121**. In other words, the transfer of the pattern in the patterned lithographic material stack through the dielectric cap layer **170** and the first tier structure (**131**, **142**) forms the first memory openings **121**.

[0208] In one embodiment, the chemistry of the anisotropic etch process employed to etch through the materials of the first alternating stack (**131**, **142**) can alternate to optimize etching of the first and second materials in the first alternating stack (**131**, **142**). The anisotropic etch can be, for example, a series of reactive ion etches. The sidewalls of the first memory openings **121** can be substantially vertical, or can be tapered. Subsequently, the patterned lithographic material stack can be subsequently removed, for example, by ashing.

[0209] Referring to FIG. **23**, a first memory film **150** can be formed as a stack of continuous material layers. The first memory film **150** can include an optional first blocking dielectric layer **152**, a first charge trapping layer **154**, and a first tunneling dielectric layer **156**.

[0210] The first blocking dielectric layer **152** can include a single dielectric material layer or a layer stack of multiple dielectric material layers. The first blocking dielectric layer **152** can be deposited on the sidewalls of each first memory opening **121** by a conformal deposition method. The first blocking dielectric layer **152** can be deposited, for example, by chemical vapor deposition (CVD), atomic layer deposition (ALD), pulsed laser deposition (PLD), liquid source misted chemical deposition, or a combination thereof. The thickness of the first blocking dielectric layer **152** can be in a range from 1 nm to 20 nm, although lesser and greater thicknesses can also be employed. The first blocking dielectric layer **152** can subsequently function as a dielectric material portion that blocks leakage of stored electrical charges to control gate electrodes.

[0211] In one embodiment, the first blocking dielectric layer **152** includes a dielectric metal oxide. As used herein, a dielectric metal oxide refers to a dielectric material that includes at least one metallic element and at least oxygen. Alternatively or additionally, the first blocking dielectric layer **152** can include silicon oxide, silicon oxynitride, silicon nitride, or a combination thereof. In one embodiment, the first blocking dielectric layer **152** can include silicon oxide. The first blocking dielectric layer **152** can be formed by a conformal deposition method such as low pressure chemical vapor deposition, atomic layer deposition, or a combination thereof. The thickness of the first blocking dielectric layer **152** can be in a range from 1 nm to 20 nm, although lesser and greater thicknesses can also be employed.

[0212] Subsequently, the first charge trapping layer **154** can be deposited as a continuous material layer over the first blocking dielectric layer **152**. In one embodiment, the first charge trapping layer **154** can be deposited as a conformal layer having a substantially same thickness throughout. As used herein, an element has a substantially same thickness throughout if the thickness of the element does not deviate from the average thickness of the element by more than 20% at all locations of the element. In one embodiment, the first charge trapping layer **154** can be a charge trapping material including a dielectric charge trapping material, which can be, for example, silicon nitride. In one embodiment, the first charge trapping layer **154** includes a silicon nitride layer.

[0213] A first tunneling dielectric layer **156** can be deposited on the physically exposed surfaces of the first blocking dielectric layer **152** and the first charge trapping layer **154**. The first tunneling dielectric layer **156** can be formed directly on the physically exposed inner sidewall of the upper portion of the first blocking dielectric layer **152** and directly on a sidewall of the remaining lower portions of the first charge trapping layer **154**. The first tunneling dielectric layer **156** includes a dielectric material through which charge tunneling can be performed under suitable electrical bias conditions. The charge tunneling may be performed through hot-carrier injection or by Fowler-Nordheim tunneling induced charge transfer depending on the mode of operation of the monolithic three-dimensional NAND string memory device to be formed. The first tunneling dielectric layer **156** can include silicon oxide, silicon nitride, silicon oxynitride, dielectric metal oxides (such as aluminum oxide and hafnium oxide), dielectric metal oxynitride, dielectric metal silicates, alloys thereof, and/or combinations thereof. In one embodiment, the

first tunneling dielectric layer **156** can include a stack of a first silicon oxide layer, a silicon oxynitride layer, and a second silicon oxide layer, which is commonly known as an ONO stack. In one embodiment, the first tunneling dielectric layer **156** can include a silicon oxide layer that is substantially free of carbon or a silicon oxynitride layer that is substantially free of carbon. The thickness of the first tunneling dielectric layer **156** can be in a range from 2 nm to 20 nm, although lesser and greater thicknesses can also be employed.

[0214] Referring to FIG. **24**, an optional first sacrificial protective liner **33**L can be formed over the first memory film **150**. The first sacrificial protective liner **33**L includes a first sacrificial material that can protects inner sidewalls of the first tunneling dielectric layer **156** during a subsequent anisotropic etch process that forms openings through the first memory film **150** at the bottom of each first memory opening **121**, and can be subsequently removed selective to the first tunneling dielectric layer **156**. In one embodiment, the first sacrificial protective liner **33**L can include a semiconductor material (such as polysilicon or amorphous silicon) or a dielectric material such as organosilicate glass, amorphous carbon, or diamond-like carbon (DLC). The thickness of the first sacrificial protective liner **33**L can be in a range from 1 nm to 3 nm, although lesser and greater thicknesses can also be employed.

[0215] Referring to FIG. **25**, an anisotropic etch can be performed to remove horizontal portions of the first sacrificial protective liner **33**L and the first memory film **150**. A combination of etch chemistries can be employed to sequentially etch the various materials of the first sacrificial protective liner **33**L and the first memory film **150**. Openings are formed through the first sacrificial protective liner **33**L and the first memory film **150** at the bottom of each first memory opening **121** to physically expose a semiconductor underneath, which may be the semiconductor material of the substrate semiconductor layer **10**. The vertical portions of the first sacrificial protective liner **33**L protect the first tunneling dielectric layer **156** during the anisotropic etch. Each remaining portion of the first sacrificial protective liner **33**L constitutes a first sacrificial spacer **33**A, which includes a sacrificial material and including the sacrificial material of the first sacrificial protective liner **33**L. The first sacrificial spacers **33**A are sacrificial fill material portions, which are herein referred to as first sacrificial fill material portions. In one embodiment, the first sacrificial spacers **33**A can include a semiconductor material such as polysilicon or amorphous silicon. The first memory film **150** is divided into multiple cylindrical portions that are located within respective memory openings. As such, each first memory opening **121** includes a first memory film **150**, which is a portion of the initial first memory film **150** as formed at the processing steps of FIG. **23**.

[0216] Referring to FIG. **26**, a sacrificial fill material is deposited in the cavities within the first memory films **150** that are located at peripheral portions of the memory openings. The sacrificial fill material is another sacrificial material that is subsequently removed, and is herein referred to as a second sacrificial material. The second sacrificial material may be the same as, or different from, the first sacrificial material. In one embodiment, the second sacrificial material may include a semiconductor material such as polysilicon or amorphous silicon, or a dielectric material such as organosilicate glass, amorphous carbon, or diamond-like carbon (DLC). In one embodiment, the first and second sacrificial materials can include semiconductor materials. In one embodiment, the sacrificial fill material (the second sacrificial material) can be deposited employing a conformal deposition process such as chemical vapor deposition.

[0217] Excess portions of the sacrificial fill material can be removed from above the horizontal plane including the top surface of the first insulating cap layer **170** employing a planarization process, which can include a recess etch and/or chemical mechanical planarization. Further, the top surface of each remaining portion of the sacrificial fill material can be recessed below the horizontal plane including the top surface of the first insulating cap layer **170** by a recess etch process, which may be an anisotropic etch process or an isotropic etch process. The recess depth, as measured between the top surfaces of the remaining portions of the sacrificial fill material and the horizontal plane including the top surface of the first insulating cap layer **170**, is less than the thickness of the first insulating cap layer **170**. In one embodiment, the recess depth can be in a range from 10 nm to 300 nm, although lesser and greater recess depths can also be employed. Each remaining portion of the sacrificial fill material after the recess process constitutes a sacrificial pillar structure **33**B. Each sacrificial pillar structure **33**B is a sacrificial fill material portion, which is herein referred to as a second sacrificial fill material portion.

[0218] The top surface of each first sacrificial spacer **33**A can be collaterally vertically recessed during the recessing of the sacrificial fill material. In this case, the first sacrificial spacers **33**A and the sacrificial pillar structures **33**B can have recessed top surfaces that are located below the horizontal plane including the top surface of the first insulating cap layer **170**. In one embodiment, the first sacrificial spacers **33**A can have top surfaces that are located at, or about, the level of the top surfaces of the sacrificial pillar structures **33**B. A cavity is formed above each combination of a first sacrificial spacer **33**A and a sacrificial pillar structure **33**B.

[0219] Referring to FIG. **27**, a recess cavity **33**E can be formed around the spacer **33**A and pillar structure **33**B by laterally expanding each cavity above the first sacrificial spacers **33**A and the sacrificial pillar structures **33**B. In one embodiment, the lateral recess cavities **33**E can be formed by removing an upper end portion of each first memory film **150**, and by laterally recessing physically exposed sidewalls of the first insulating cap layer **170**. In one embodiment, physically exposed portions of the first memory films **150** can be isotropically etched by a combination of etchants that etch the materials of the first memory films **150**. For example, if the first tunneling dielectric layer **156** includes silicon oxide, the first charge trapping layer **154** includes silicon nitride, and the first blocking dielectric layer **152** includes silicon oxide, a sequence of wet etches employing first hydrofluoric acid, phosphoric acid, and second hydrofluoric acid can be employed to etch the physically exposed portions of the first memory films **150**. Subsequently, physically exposed portions of the first insulating cap layer **170** can be isotropically etched employing a wet etch. For example, if the first insulating cap layer **170** includes silicon oxide, a wet etch or a vapor phase etch employing hydrofluoric acid can be employed to isotropically recess physically exposed surface portions of the first insulating cap layer **170**. Each recess cavity **33**E laterally protrudes farther than an underlying sidewall of a respective first memory opening because the recess cavity **33**E is formed by removing sidewall portions of the first insulating cap layer **170**. The tip portion **33**T of the sacrificial material (e.g., spacer **33**A and pillar structure **33**B)

protrudes above a top surface of the first memory film **150** after the recess etch recesses the first memory film **150** relative to the sacrificial material.

[0220] Referring to FIG. **28**, a temporary landing pad **33**C can be formed within each recess cavity **33**E by filling the recess cavities **33**E with a disposable fill material, which is herein referred to as a third sacrificial material. The disposable fill material is another sacrificial material, which is herein referred to as third sacrificial material. The disposable fill material can include a semiconductor material (such as polysilicon or amorphous silicon) or a dielectric material such as organosilicate glass, amorphous carbon, or diamond-like carbon (DLC). Excess portions of the disposable fill material can be removed from above the horizontal plane including the top surface of the first insulating cap layer **170**. Each remaining portion of the disposable fill material filling a recess cavity **33**E constitutes a temporary landing pad **33**C. Each temporary landing pad **33**C is a sacrificial fill material portion, which is herein referred to as a third sacrificial fill material portion.

[0221] The sacrificial material of the temporary landing pads **33**C may be the same as, or may be different from, the sacrificial materials of the first sacrificial spacers **33**A and the sacrificial pillar structures **33**B. Each first memory opening, as expanded through formation of recess cavities **33**E at the processing steps of FIG. **27**, includes a first sacrificial spacer **33**A (a first sacrificial fill material portion), a sacrificial pillar structure **33**B (a second sacrificial fill material portion), and a temporary landing pad **33**C (a third sacrificial fill material portions). A set of a first sacrificial spacer **33**A, a sacrificial pillar structure **33**B, and a temporary landing pad **33**C located within the same first memory opening constitutes a set of contiguous sacrificial fill material portions **33**.

[0222] Referring to FIG. **29**, at least one additional tier structure can be formed over the first tier structure (**131**, **142**). Each of the at least one additional tier structure can include an alternating stack of insulating layers and sacrificial material layers. For example, a second alternating stack (**232**, **242**) of material layers can be subsequently formed on the top surface of the first tier structure (**131**, **142**). The second stack (**232**, **242**) includes an alternating plurality of third material layers and fourth material layers. Each third material layer can include a third material, and each fourth material layer can include a fourth material that is different from the third material. In one embodiment, the third material can be the same as the first material of the first insulating layer **131**, and the fourth material can be the same as the second material of the first sacrificial material layers **142**.

[0223] In one embodiment, the third material layers can be second insulating layers **232** and the fourth material layers can be second spacer material layers that provide vertical spacing between each vertically neighboring pair of the second insulating layers **232**. In one embodiment, the third material layers and the fourth material layers can be second insulating layers **232** and second sacrificial material layers **242**, respectively. The third material of the second insulating layers **232** may be at least one insulating material. The fourth material of the second sacrificial material layers **242** may be a sacrificial material that can be removed selective to the third material of the second insulating layers **232**. The second sacrificial material layers **242** may comprise an insulating material, a semiconductor material, or a conductive material. The fourth material of the second sacrificial material layers **242** can be subsequently replaced with electrically conductive electrodes which can function, for example, as control gate electrodes of a vertical NAND device.

[0224] In one embodiment, each second insulating layer **232** can include a second insulating material, and each second sacrificial material layer **242** can include a second sacrificial material. In this case, the second stack (**232**, **242**) can include an alternating plurality of second insulating layers **232** and second sacrificial material layers **242**. The third material of the second insulating layers **232** can be deposited, for example, by chemical vapor deposition (CVD). The fourth material of the second sacrificial material layers **242** can be formed, for example, CVD or atomic layer deposition (ALD).

[0225] The third material of the second insulating layers **232** can be at least one insulating material. Insulating materials that can be employed for the second insulating layers **232** can be any material that can be employed for the first insulating layers **131**. The fourth material of the second sacrificial material layers **242** is a sacrificial material that can be removed selective to the third material of the second insulating layers **232**. Sacrificial materials that can be employed for the second sacrificial material layers **242** can be any material that can be employed for the first sacrificial material layers **142**. In one embodiment, the second insulating material can be the same as the first insulating material, and the second sacrificial material can be the same as the first sacrificial material.

[0226] The thicknesses of the second insulating layers **232** and the second sacrificial material layers **242** can be in a range from 20 nm to 50 nm, although lesser and greater thicknesses can be employed for each second insulating layer **232** and for each second sacrificial material layer **242**. The number of repetitions of the pairs of a second insulating layer **232** and a second sacrificial material layer **242** can be in a range from 2 to 1,024, and typically from 8 to 256, although a greater number of repetitions can also be employed. In one embodiment, each second sacrificial material layer **242** in the second stack (**232**, **242**) can have a uniform thickness that is substantially invariant within each respective second sacrificial material layer **242**.

[0227] A second dielectric cap layer **270** can be subsequently formed over the second stack (**232**, **242**). The dielectric cap layer **270** includes a dielectric material that is different from the material of the second sacrificial material layers **242**. In one embodiment, the dielectric cap layer **270** can include silicon oxide. In one embodiment, the first and second sacrificial material layers (**142**, **242**) can comprise silicon nitride. Optionally, second stepped surfaces (not shown) can be region in the contact region in the same manner as formation of the first stepped surfaces. A second retro-stepped dielectric material portion may be formed over the second stepped surfaces.

[0228] Referring to FIG. **30**A, second memory openings **221** can be formed through the second tier structure (**232**, **242**) in an area overlying the first memory openings **121**, i.e., in areas that substantially coincides with the areas of the first memory openings **121**. The second memory openings **221** can be formed to the top surface of the temporary landing pads **33**C. For example, a lithographic material stack (not shown) including at least a photoresist layer can be formed over the second dielectric cap layer **270** and the second tier structure (**232**, **242**), and can be lithographically patterned to form openings within the lithographic material stack. The pattern in the lithographic material stack can be transferred through the entirety of the second tier structure (**232**, **242**) by

at least one anisotropic etch that employs the patterned lithographic material stack as an etch mask. Portions of the second dielectric cap layer **270** and the second tier structure (**232**, **242**) underlying the openings in the patterned lithographic material stack are etched to form the second memory openings **221**. In other words, the transfer of the pattern in the patterned lithographic material stack through the second dielectric cap layer **270** and the second tier structure (**232**, **242**) forms the second memory openings **221**.

[0229] In one embodiment, the chemistry of the anisotropic etch process employed to etch through the materials of the second stack (**232**, **242**) can alternate to optimize etching of the third and fourth materials in the second stack (**232**, **242**). The anisotropic etch can be, for example, a series of reactive ion etches. The sidewalls of the second memory openings **221** can be substantially vertical, or can be tapered. In one embodiment, the temporary landing pads **33**C may be employed as stopping structures for the anisotropic etch process that forms the second memory openings **221**. The temporary landing pads **33**C increase the overlay tolerance window for the lithography process that aligns the pattern for the openings in the photoresist layer for forming the second memory openings **221** to the underlying pattern of the first memory openings, which are filled with the sets of contiguous sacrificial fill material portions **33**. Thus, provided that the overlay variation between the pattern for the opening in the photoresist layer for forming the second memory openings **221** with respect to the underlying pattern of the first memory openings is less than the nominal distance between a sidewall of a second memory opening **221** and an outer periphery of an underlying temporary landing pad **33**C, the second memory openings **221** can be laterally contained within the regions that overlie the temporary landing pads **33**C, and the possibility of accidental extension of the second memory openings **221** into portions of the first insulating cap layer **170** or the first tier structure (**131**, **142**) can be minimized.

[0230] FIG. **30**B illustrates an exemplary structure according to an alternative embodiment of the present disclosure. In this embodiment, the etch of the second memory opening **221** extends into the temporary landing pad **33**C. This forms an annular rim **33**D at the top outer edge of the temporary landing pad **33**C which surrounds the bottom part of the second memory opening **221**.

[0231] Referring to FIG. **31**, a second memory film **250** can be formed in the second memory openings **221**. The second memory film **250** can have a layer stack of a same type as the first memory film **150**. For example, the second memory film **250** can include an optional second blocking dielectric layer **252**, a second charge trapping layer **254**, and a second tunneling dielectric layer **256**. The second blocking dielectric layer **252** can include any material that can be employed for the first blocking dielectric layer **152**, and can have the same thickness range as the range of thicknesses that can be employed for the first blocking dielectric layer **152**. The second charge trapping layer **254** can include any material that can be employed for the first charge trapping layer **154**, and can have the same thickness range as the range of thicknesses that can be employed for the first charge trapping layer **154**. The second tunneling dielectric layer **256** can include any material that can be employed for the first tunneling dielectric layer **156**, and can have the same thickness range as the range of thicknesses that can be employed for the first tunneling dielectric layer **156**. In one embodiment, the second memory film **250** can have the same layer stack as the first memory film **150**, and may be formed employing the same deposition methods as the first memory film **150**.

[0232] A second sacrificial protective liner **23**L can be formed over the second memory film **250**. The second sacrificial protective liner **23**L includes a sacrificial material that can protects inner sidewalls of the second tunneling dielectric layer **256** during a subsequent anisotropic etch process that forms openings through the second memory film **250** at the bottom of each second memory opening **221**, and can be subsequently removed selective to the second tunneling dielectric layer **256**. In one embodiment, the second sacrificial protective liner **23**L can include a semiconductor material (such as polysilicon or amorphous silicon) or a dielectric material such as organosilicate glass, amorphous carbon, or diamond-like carbon (DLC). The thickness of the sacrificial protective liner can be in a range from 1 nm to 3 nm, although lesser and greater thicknesses can also be employed. If the second memory opening **221** extends into the temporary landing pad **33** as shown in FIG. **30**D, then the bottom of the second memory film **250** is surrounded by the annular rim **33**D of the temporary landing pad **33**C.

[0233] Referring to FIG. **32**, an anisotropic etch can be performed to remove horizontal portions of the second sacrificial protective liner **23**L and the second memory film **250**. A combination of etch chemistries can be employed to sequentially etch the various materials of the second sacrificial protective liner **23**L and the second memory film **250**. Openings are formed through the second sacrificial protective liner **23**L and the second memory film **250** at the bottom of each memory opening to physically expose the temporary landing pad **33**. The vertical portions of the second sacrificial protective liner **23**L protect the second tunneling dielectric layer **256** during the anisotropic etch. Each remaining portion of the second sacrificial protective liner **23**L constitutes a second sacrificial spacer **23**A, which includes a sacrificial material and including the sacrificial material of the second sacrificial protective liner **23**L. The second sacrificial spacers **23**A are cylindrical sacrificial material portions. In one embodiment, the second sacrificial spacers **23**A can include a semiconductor material such as polysilicon or amorphous silicon. The second memory film **250** is divided into multiple cylindrical portions that are located within respective memory openings. As such, each second memory opening **221** includes a second memory film **250**, which is a portion of the initial second memory film **250** as formed at the processing steps of FIG. **31**.

[0234] Referring to FIG. **33**, the second sacrificial spacers **23**A and the sets of contiguous sacrificial fill material portions **33** can be removed. Specifically, the second sacrificial spacers **23**A can be removed from within the second memory openings **221**, and the temporary landing pads **33**C, the sacrificial pillar structures **33**B, and the first sacrificial spacers **33**A can be removed from underneath the second memory openings **221** through the openings **221**. Laterally protruding cavities **47** are formed in the volumes from which the temporary landing pads **33**C are removed. If the temporary landing pads **33**C contain the annular rim **33**D as shown in FIG. **30**B, then the rim **33**D is removed together with the pads **33**C to leave an annular space around the bottom of the second memory film **250**.

[0235] In case the second sacrificial spacers **23**A and/or the sets of contiguous sacrificial fill material portions **33** comprise a semiconductor material (such as polysilicon or amorphous silicon), an etch chemistry that removes the semicon-

ductor material selective to dielectric materials can be employed. For example, a dry etch employing HCl or any wet etch process can be employed to remove the semiconductor materials of the second sacrificial spacers **23**A and/or the sets of contiguous sacrificial fill material portions **33** selective to the dielectric materials of the first and second memory films (**150**, **250**). Alternatively, if the second sacrificial spacers **23**A and/or the sets of contiguous sacrificial fill material portions **33** comprise a dielectric material such as organosilicate glass, amorphous carbon, or diamond-like carbon (DLC), a wet etch employing dilute hydrofluoric acid or an ashing process can be employed to remove the second sacrificial spacers **23**A and/or the sets of contiguous sacrificial fill material portions **33** selective to the dielectric materials of the first and second memory films (**150**, **250**). A plurality of inter-tier memory openings **49** can be formed through the first and second tier structures (**131**, **142**, **232**, **242**). As used herein, an inter-tier memory opening **49** refers to a memory opening that extends through at least two tier structures. Each inter-tier memory opening **49** is a combination of a first memory opening **121**, a laterally protruding cavity **47**, and a second memory opening **221**.

[0236] Referring to FIG. **34**, a semiconductor channel layer **60**L can be deposited on the physically exposed surfaces of the first memory films **150** and the second memory films **250**, and directly on the physically exposed sidewalls of the first insulating cap layer **170** (which may include concave sidewalls). The semiconductor channel layer **60**L can be formed directly on a bottom surface of a second memory film **250** in an upper portion of each laterally protruding cavity **47** and a top surface of a first memory film at a top portion of each laterally protruding cavity **47**.

[0237] The semiconductor channel layer **60**L includes a semiconductor material such as at least one elemental semiconductor material, at least one III-V compound semiconductor material, at least one II-VI compound semiconductor material, at least one organic semiconductor material, or other semiconductor materials known in the art. In one embodiment, the semiconductor channel layer **60**L includes amorphous silicon or polysilicon. The semiconductor channel layer **60**L can be formed by a conformal deposition method such as low pressure chemical vapor deposition (LPCVD).

[0238] The semiconductor channel layer **60**L can have a doping of the first conductivity type (i.e., the same conductivity type as the substrate semiconductor layer **10**) or can be substantially intrinsic. As used herein, a semiconductor material is substantially intrinsic if the dopant concentration does not exceed $1.0\times10^{16}/cm^3$. In one embodiment, the semiconductor channel layer **60**L can include amorphous silicon or polysilicon. The thickness of the semiconductor channel layer **60**L can be in a range from 2 nm to 10 nm, although lesser and greater thicknesses can also be employed. A memory cavity **49'** is present in each memory opening after formation of the semiconductor channel layer **60**L.

[0239] Referring to FIG. **35**A, a dielectric material is deposited in the memory cavities **49'** and over the semiconductor channel layer **60**L. The dielectric material can include doped silicate glass, undoped silicate glass, or organosilicate glass. The dielectric material may be deposited employing a conformal deposition process (such as chemical vapor deposition) or a self-planarizing deposition process such as spin-coating. In some embodiments, encapsulated cavities (not shown) may be present in portions of the memory cavities **49'** that are not filled with the dielectric material. The encapsulated cavities may include vacuum, air, or inert gas depending on the environment in which the dielectric material is deposited. Each encapsulated cavity can be encapsulated by the dielectric material. In other words, there may not be any path that continuously connects the inside of an encapsulated cavity to a volume outside of the dielectric material.

[0240] The portions of the dielectric material and the semiconductor channel layer **60**L located above the horizontal plane including the top surface of the second insulating cap layer **270** by a planarization process. The planarization process can employ a recess etch or chemical mechanical planarization. Subsequently, the dielectric material can be vertically recessed selective to the second insulating cap layer **270** employing a recess etch. In one embodiment, the dielectric material can include a doped silicate glass (such as borosilicate glass or phosphosilicate glass) and the second insulating cap layer **270** can include undoped silicate glass, and a wet etch that etches the doped silicate glass faster than the undoped silicate glass can be employed to recess the top surfaces of the remaining portions of the deposited dielectric material relative to the top surface of the second insulating cap layer **270**. Each remaining dielectric material portion in the inter-tier memory openings **49** constitutes a dielectric core **162**, which may, or may not, include encapsulated cavities therein as discussed above. The top surface of each dielectric core **162** can be located between a first horizontal plane including the top surface of the second insulating cap layer **270** and a second horizontal plane including the bottom surface of the second insulating cap layer **270**. A recessed region is formed above each dielectric core **162**.

[0241] Drain region **163** can be formed by depositing a doped semiconductor material within each recessed region above the dielectric cores **162**. The doped semiconductor material can be, for example, doped polysilicon. In one embodiment, the semiconductor material of the semiconductor channel layer **60**L can have a doping of the first conductivity type, the doped semiconductor material can have a doping of a second conductivity type that is the opposite of the first conductivity type. For example, if the first conductivity type is p-type, the second conductivity type can be n-type, and vice versa. Excess portions of the deposited semiconductor material can be removed from above the top surface of the second dielectric cap layer **270**, for example, by chemical mechanical planarization (CMP) or a recess etch. Each remaining portion of the deposited doped semiconductor material constitutes a drain region **163**. Each remaining portion of the semiconductor channel layer **60**L constitutes a semiconductor channel **160**.

[0242] Electrical current can flow through the semiconductor channel **160** when a vertical NAND device including the semiconductor channel **160** is turned on. Each first memory film **150** and each second memory film **250** can store electrical charges with a macroscopic retention time. As used herein, a macroscopic retention time refers to a retention time suitable for operation of a memory device as a permanent memory device such as a retention time in excess of 24 hours. Each adjoining set of a first memory film **150**, a second memory film **250**, and a semiconductor channel **160** constitutes a memory stack structure (**150**, **250**, **160**). The memory stack structure (**150**, **250**, **160**) is formed in an inter-tier memory opening **49**, which is a combination of a first memory opening **121**, a laterally protruding cavity **47**, and a second memory opening **221**. A first memory film **150** is located inside the first memory opening **121**. A second

memory film **250** is located inside the second memory opening **221**. A semiconductor channel **160** contacts inner sidewalls of the first memory film **150** and the second memory film **250**.

[0243] In one embodiment, the first memory film **150** is vertically spaced from the second memory film **250** by a laterally protruding portion **60**P of the semiconductor channel **160** such that the first memory film **150** does not contact the second memory film **250**. If the temporary landing pads **33**C contained the annular rim **33**D as shown in FIG. **30**B, then the annular space around the bottom of the second memory film **250** comprises a part of the laterally protruding cavity **47**. The semiconductor channel **160** is also filled into the annular space of the cavity **47** such that the laterally protruding portion **60**P of the semiconductor channel **160** contains an annular rim **60**R which surrounds the bottom portion of the second memory film **250** and contacts the insulating cap layer **170**, as shown in FIG. **35**B.

[0244] A dielectric core **162** is located inside the semiconductor channel **160**. The dielectric core **162** comprises a laterally protruding portion **62**P that laterally extends farther outward than a first portion **621** of the dielectric core **162** surrounded by the first memory film **150** and a second portion **622** of the dielectric core **162** surrounded by the second memory film **250**. Each dielectric core **162** can include a neck portion **62**N adjoined to the laterally protruding portion **62**P and having a lesser lateral extent than the first portion **621** of the dielectric core **162** and the second portion **622** of the dielectric core **162**.

[0245] Referring to FIG. **36**, a planarization material layer **280** can be formed over the second dielectric cap layer **270**. The planarization material layer **280** may be selected as an in-process structure that is consumed during subsequent planarization processes. In one embodiment, the planarization material layer **280** can include a silicon oxide material deposited by chemical vapor deposition such as tetraethylorthosilicate (TEOS) silicon oxide. The thickness of the planarization material layer **280** can be in a range from 50 nm to 300 nm, although lesser and greater thicknesses can also be employed.

[0246] At least one backside trench **79** can be formed through the upper and first tier structures, for example, by applying a photoresist layer (not shown), lithographically patterning the photoresist layer, and transferring the pattern in the photoresist layer through the upper and first tier structures employing an anisotropic etch. The anisotropic etch that forms the at least one backside trench **79** can stop on the substrate **10**. The photoresist layer can be subsequently removed, for example, by ashing.

[0247] Referring to FIG. **37**, an etchant that selectively etches the materials of the first and second sacrificial material layers (**142**, **242**) with respect to the materials of the first and second insulating layers (**131**, **232**), the material of the substrate semiconductor layer **10**, and the first and second dielectric cap layers (**170**, **270**) can be introduced into the backside trench **79**, for example, employing an isotropic etch process. First backside recesses **143** are formed in volumes from which the first sacrificial material layers **142** are removed. Second backside recesses **243** are formed in volumes from which the second sacrificial material layers **242** are removed. In one embodiment, the first and second sacrificial material layers (**142**, **242**) can include silicon nitride, and the materials of the first and second insulating layers (**131**, **232**), can be silicon oxide. In another embodiment, the first and second sacrificial material layers (**142**, **242**) can include a semiconductor material such as germanium or a silicon-germanium alloy, and the materials of the first and second insulating layers (**131**, **232**) can be selected from silicon oxide and silicon nitride.

[0248] The isotropic etch process can be a wet etch process employing a wet etch solution, or can be a gas phase (dry) etch process in which the etchant is introduced in a vapor phase into the backside trench **79**. For example, if the first and second sacrificial material layers (**142**, **242**) include silicon nitride, the etch process can be a wet etch process in which the exemplary structure is immersed within a wet etch tank including phosphoric acid, which etches silicon nitride selective to silicon oxide, silicon, and various other materials employed in the art.

[0249] Each of the first and second backside recesses (**143**, **243**) can be a laterally extending cavity having a lateral dimension that is greater than the vertical extent of the cavity. In other words, the lateral dimension of each of the first and second backside recesses (**143**, **243**) can be greater than the height of the respective backside recess (**143**, **243**). A plurality of first backside recesses **143** can be formed in the volumes from which the material of the first sacrificial material layers **142** is removed. A plurality of second backside recesses **243** can be formed in the volumes from which the material of the second sacrificial material layers **242** is removed. Each of the first and second backside recesses (**143**, **243**) can extend substantially parallel to the top surface of the substrate **10**. A backside recess (**143**, **243**) can be vertically bounded by a top surface of an underlying insulating layer (**131** or **232**) and a bottom surface of an overlying insulating layer (**131** or **232**). In one embodiment, each of the first and second backside recesses (**143**, **243**) can have a uniform height throughout. In some other embodiments, the first and second backside recesses (**143**, **243**) may have height variations therein.

[0250] Referring to FIG. **38**, a gate dielectric layer **12** can be formed by converting surface portions of the substrate semiconductor layer **10** into a continuous dielectric material layer. In one embodiment, the gate dielectric layer **12** can be formed by thermal conversion of the surface portions of the substrate semiconductor layer **10**. In one embodiment, the thermal conversion process can include a thermal oxidation process and/or a thermal nitridation process. In one embodiment, the gate dielectric layer **12** can include a thermal oxide of the semiconductor material of the substrate semiconductor layer **10**. The gate dielectric layer **12** can be formed as a single continuous layer.

[0251] Referring to FIG. **39**, an optional backside blocking dielectric layer (not shown) can be deposited in the backside recesses (**143**, **243**) and the backside trenches **79** and over the planarization dielectric layer **280**. The backside blocking dielectric layer includes a dielectric material such as a dielectric metal oxide, silicon oxide, or a combination thereof. In one embodiment, the backside blocking dielectric layer can include aluminum oxide. The backside blocking dielectric layer can be formed by a conformal deposition process such as atomic layer deposition or chemical vapor deposition. The thickness of the backside blocking dielectric layer can be in a range from 1 nm to 60 nm, although lesser and greater thicknesses can also be employed.

[0252] At least one conductive material can be deposited in the plurality of backside recesses (**143**, **243**), over the sidewalls of the backside trench **79**, and over the planarization dielectric layer **280**. The at least one conductive material can

include at least one metallic material, i.e., an electrically conductive material that includes at least one metallic element.

[0253] A plurality of first electrically conductive layers **146** can be formed in the plurality of first backside recesses **143**, a plurality of second electrically conductive layers **246** can be formed in the plurality of second backside recesses **243**, and a continuous metallic material layer can be formed on the sidewalls of each backside trench **79** and over the planarization dielectric layer **280**. In embodiments in which the first spacer material layers and the second spacer material layers are provided as first sacrificial material layers **142** and second sacrificial material layers **242**, the first and second sacrificial material layers (**142**, **242**) can be replaced with the first and second conductive material layers (**146**, **246**), respectively. Specifically, each first sacrificial material layer **142** can be replaced with a portion of the backside blocking dielectric layer and a first electrically conductive layer **146**, and each second sacrificial material layer **242** can be replaced with a portion of the backside blocking dielectric layer and a second electrically conductive layer **246**. A backside cavity is present in the portion of each backside trench **79** that is not filled with the continuous metallic material layer.

[0254] The metallic material can be deposited by a conformal deposition method, which can be, for example, chemical vapor deposition (CVD), atomic layer deposition (ALD), electroless plating, electroplating, or a combination thereof. The metallic material can be an elemental metal, an intermetallic alloy of at least two elemental metals, a conductive nitride of at least one elemental metal, a conductive metal oxide, a conductive doped semiconductor material, a conductive metal-semiconductor alloy such as a metal silicide, alloys thereof, and combinations or stacks thereof. Non-limiting exemplary metallic materials that can be deposited in the backside recesses (**143**, **243**) include tungsten, tungsten nitride, titanium, titanium nitride, tantalum, tantalum nitride, cobalt, and ruthenium. In one embodiment, the metallic material can comprise a metal such as tungsten and/or metal nitride. In one embodiment, the metallic material for filling the backside recesses (**143**, **243**) can be a combination of titanium nitride layer and a tungsten fill material. In one embodiment, the metallic material can be deposited by chemical vapor deposition or atomic layer deposition.

[0255] Residual material can be removed from each backside trench **79**. Specifically, the deposited metallic material of the continuous metallic material layer can be etched back from the sidewalls of each backside trench **79** and from above the planarization dielectric layer **280**, for example, by an isotropic etch. Each remaining portion of the deposited metallic material in the first backside recesses **143** constitutes a first electrically conductive layer **146**. Each remaining portion of the deposited metallic material in the second backside recesses **243** constitutes a second electrically conductive layer **246**. Each electrically conductive layer (**146**, **246**) can be a conductive line structure.

[0256] Each electrically conductive layer (**146**, **246**) except the bottommost electrically conductive layer (i.e., the bottommost first electrically conductive layer **146**) can function as a combination of a plurality of control gate electrodes located at a same level and a word line electrically interconnecting, i.e., electrically shorting, the plurality of control gate electrodes located at the same level. The control gate electrodes within each electrically conductive layer (**146**, **246**) are the control gate electrodes for a vertical memory device including the memory stack structures (**150**, **250**, **160**).

[0257] The bottommost first electrically conductive layer **146** can be a source select gate electrode located over the gate dielectric layer **12**, which can control activation of a horizontal channel portion of a semiconductor channel that extends between a source region to be subsequently formed underneath each backside trench **79** and a drain region **163** connected to an activated memory stack structure (**150**, **250**, **160**). In one embodiment, the backside blocking dielectric layer may be present as a single continuous material layer. In another embodiment, the vertical portions of the backside blocking dielectric layer may be removed from within the backside trenches **79**, and the backside blocking dielectric layer can have a plurality of physically disjoined backside blocking dielectric layer portions that are located at each level of the electrically conductive layers (**146**, **246**).

[0258] Referring to FIG. **40**, dopants of a second conductivity type, which is the opposite of the first conductivity type of the substrate semiconductor layer **10**, can be implanted into a surface portion of the substrate semiconductor layer **10** to form a first active region **61** underneath the bottom surface of each backside trench **79**. As used herein, an "active region" refers to a source region, a drain region, an emitter, or a collector of a transistor. An insulating spacer **74** including a dielectric material can be formed at the periphery of each backside trench **79**, for example, by deposition of a conformal insulating material (such as silicon oxide) and a subsequent anisotropic etch. The planarization dielectric layer **280** may be thinned due to a collateral etch during the anisotropic etch that removes the vertical portions of horizontal portions of the deposited conformal insulating material.

[0259] A backside contact via structure **76** can be formed in the remaining volume of each backside trench **79**, for example, by deposition of at least one conductive material and removal of excess portions of the deposited at least one conductive material from above a horizontal plane including the top surface of the planarization dielectric layer **280** by a planarization process such as chemical mechanical planarization or a recess etch. Each backside contact via structure **76** can include a metallic liner (which may include TiN, TaN, or WN) and a metal fill material portion including a metal (such as W, Ru, Cu, or Co). The planarization dielectric layer **280** can be thinned and/or removed during a latter part of the planarization process, which may employ chemical mechanical planarization (CMP), a recess etch, or a combination thereof. Each backside contact via structure **76** can be formed through the at least one tier structure (**131**, **146**, **232**, **246**) and on a source region **61**.

[0260] Subsequently, suitable contact via structures can be formed on various nodes of the memory device, which can include, for example, drain contact via structures (not shown) that contact respective drain regions **163** and word line contact via structures (not shown) that contact a subset of the electrically conductive layers (**146**, **246**) that function as the word lines of the memory device.

[0261] According to an aspect of the present disclosure, the memory device can be a monolithic three-dimensional memory device that comprises a first tier structure (**131**, **146**) located over a top surface of a substrate **10** and comprising a first alternating stack of first insulating layers **131** and first electrically conductive layers **146**; an insulating cap layer (i.e., a first insulating cap layer **170**) overlying the first tier structure (**131**, **146**); a second tier structure (**232**, **246**) located

over the insulating cap layer **170** and comprising a second alternating stack of second insulating layers **232** and second electrically conductive layers **246**; and a memory stack structure (**150**, **250**, **160**) comprising a first memory film **150** located within the first tier structure (**131**, **146**), a second memory film **250** located within the second tier structure (**232**, **246**), and a semiconductor channel **160** that extends through the second tier structure (**232**, **246**), the insulating cap layer **170**, and the first tier structure (**131**, **146**). The semiconductor channel **160** contacts the insulating cap layer **170**. The first memory film **150** does not contact the second memory film **250**.

[0262] In one embodiment, the semiconductor channel **160** is laterally spaced from the first tier structure (**131**, **146**) by the first memory film **150**, and is laterally spaced from the second tier structure (**232**, **246**) by the second memory film **250**. In one embodiment, the first memory film **150** is vertically spaced from the second memory film **250** by a laterally protruding portion **60**P of the semiconductor channel **160** such that the first memory film **150** does not contact the second memory film **250**. In one embodiment, the laterally protruding portion **60**P of the semiconductor channel **160** comprises a convex sidewall in physical contact with a concave sidewall of the insulating cap layer **170**. In one embodiment, the laterally protruding portion **60**P of the semiconductor channel **160** protrudes farther outward than outer sidewalls of the first memory film **150** and the second memory film **250**.

[0263] In one embodiment, a first horizontal portion **6**H**1** (which can be a first annular horizontal portion) of the semiconductor channel **160** can be in contact with a horizontal annular bottom surface of the second memory film **250**. In one embodiment, a second horizontal portion **6**H**2** (which can be a second annular horizontal portion) of the semiconductor channel **160** can be in contact with an annular top surface of the first memory film **150**.

[0264] In one embodiment, each of the first and second memory films (**150**, **250**) can comprise a tunneling dielectric layer (**156** or **256**) laterally surrounding the semiconductor channel **160**, a plurality of charge storage regions laterally surrounding (i.e., located on the outside) of the tunneling dielectric layer (**256** or **256**) (as embodied as portions of a charge trapping layer (**154** or **254**) that are located at the levels of the electrically conductive layers (**146**, **246**); and a blocking dielectric layer (**152** or **252**) laterally surrounding a respective plurality of charge storage regions.

[0265] In one embodiment, a dielectric core **162** can be located within (i.e., surrounded by) the semiconductor channel **160**. The dielectric core **162** comprises a laterally protruding portion **62**P that laterally extends farther outward than a first portion **621** of the dielectric core **162** surrounded by the first memory film **150** and a second portion **622** of the dielectric core **162** surrounded by the second memory film **250**. In one embodiment, the dielectric core **162** comprises a neck portion **62**N adjoined to the laterally protruding portion **62**P and having a lesser lateral extent than the first portion of the dielectric core **621** and the second portion of the dielectric core **622**.

[0266] In one embodiment, the monolithic three-dimensional memory structure comprises a monolithic three-dimensional NAND memory device. The first and second electrically conductive layers can comprise, or can be electrically connected to, a respective word line of the monolithic three-dimensional NAND memory device. The substrate **10** can comprise a silicon substrate. The monolithic three-dimensional NAND memory device can comprise an array of monolithic three-dimensional NAND strings over the silicon substrate. At least one memory cell in a first device level of the array of monolithic three-dimensional NAND strings can be located over another memory cell in a second device level of the array of monolithic three-dimensional NAND strings. The silicon substrate can contain an integrated circuit comprising a driver circuit for the memory device located thereon. The array of monolithic three-dimensional NAND strings can comprises a plurality of semiconductor channels. At least one end portion of each of the plurality of semiconductor channels extends substantially perpendicular to a top surface of the substrate. The array of monolithic three-dimensional NAND strings can comprises a plurality of charge storage elements. Each charge storage element can be located adjacent to a respective one of the plurality of semiconductor channels. The array of monolithic three-dimensional NAND strings can comprise a plurality of control gate electrodes having a strip shape extending substantially parallel to the top surface of the substrate. The plurality of control gate electrodes can comprise at least a first control gate electrode located in the first device level and a second control gate electrode located in the second device level.

[0267] The embodiments of the present disclosure can be employed to provide temporary landing pads **33**C that are self-aligned to the underlying first memory opening **121**. Formation of the temporary landing pads **33**C does not require any lithographic patterning because an isotropic etch is employed to form the recess cavities **33**E. The temporary landing pads **33**C laterally protrude from the sidewalls of the first memory openings **121** by a same lateral distance, which is determined by the extent of the isotropic etch employed to form the recess cavities **33**E. Thus, use of the temporary landing pads **33**C of the present disclosure can increase the lithographic overlay process window for alignment of the second memory openings **221** to the first memory openings **121**, and thus, increase the yield and/or decrease the manufacturing cost during fabrication of a three-dimensional NAND memory device.

[0268] Although the foregoing refers to particular preferred embodiments, it will be understood that the disclosure is not so limited. It will occur to those of ordinary skill in the art that various modifications may be made to the disclosed embodiments and that such modifications are intended to be within the scope of the disclosure. Where an embodiment employing a particular structure and/or configuration is illustrated in the present disclosure, it is understood that the present disclosure may be practiced with any other compatible structures and/or configurations that are functionally equivalent provided that such substitutions are not explicitly forbidden or otherwise known to be impossible to one of ordinary skill in the art. All of the publications, patent applications and patents cited herein are incorporated herein by reference in their entirety.

What is claimed is:

1. A monolithic three-dimensional memory device comprising:

a first tier structure located over a top surface of a substrate and comprising a first alternating stack of first insulating layers and first electrically conductive layers;

an insulating cap layer overlying the first tier structure;

a second tier structure located over the insulating cap layer and comprising a second alternating stack of second insulating layers and second electrically conductive layers; and

a memory stack structure comprising a first memory film located within the first tier structure, a second memory film located within the second tier structure, and a semiconductor channel that extends through the second tier structure, the insulating cap layer, and the first tier structure, wherein the semiconductor channel contacts the insulating cap layer.

2. The monolithic three-dimensional memory device of claim **1**, wherein the semiconductor channel is laterally spaced from the first tier structure by the first memory film, and is laterally spaced from the second tier structure by the second memory film.

3. The monolithic three-dimensional memory device of claim **1**, wherein the first memory film is vertically spaced from the second memory film by a laterally protruding portion of the semiconductor channel such that the first memory film does not contact the second memory film.

4. The monolithic three-dimensional memory device of claim **3**, wherein the laterally protruding portion of the semiconductor channel comprises a convex sidewall in physical contact with a concave sidewall of the insulating cap layer and an annular rim which surrounds a bottom portion of the second memory film and contacts the insulating cap layer.

5. The monolithic three-dimensional memory device of claim **3**, wherein the laterally protruding portion of the semiconductor channel protrudes farther outward than outer sidewalls of the first memory film and the second memory film.

6. The monolithic three-dimensional memory device of claim **1**, wherein a first horizontal portion of the semiconductor channel is in contact with a horizontal annular bottom surface of the second memory film.

7. The monolithic three-dimensional memory device of claim **6**, wherein a second horizontal portion of the semiconductor channel is in contact with an annular top surface of the first memory film.

8. The monolithic three-dimensional memory device of claim **1**, wherein each of the first and second memory films comprises:

a tunneling dielectric layer laterally surrounding the semiconductor channel;

a plurality of charge storage regions located outside of the tunneling dielectric layer; and

a blocking dielectric layer laterally surrounding a respective plurality of charge storage regions.

9. The monolithic three-dimensional memory device of claim **1**, further comprising a dielectric core located within the semiconductor channel and comprising a laterally protruding portion that laterally extends farther outward than a first portion of the dielectric core surrounded by the first memory film and a second portion of the dielectric core surrounded by the second memory film.

10. The monolithic three-dimensional memory device of claim **10**, wherein the dielectric core comprises a neck portion adjoined to the laterally protruding portion and having a lesser lateral extent than the first portion of the dielectric core and the second portion of the dielectric core.

11. The monolithic three-dimensional memory device of claim **1**, wherein:

the monolithic three-dimensional memory device comprises a monolithic three-dimensional NAND memory device;

the first and second electrically conductive layers comprise, or are electrically connected to, a respective word line of the monolithic three-dimensional NAND memory device;

the substrate comprises a silicon substrate;

the monolithic three-dimensional NAND memory device comprises an array of monolithic three-dimensional NAND strings over the silicon substrate;

at least one memory cell in a first device level of the array of monolithic three-dimensional NAND strings is located over another memory cell in a second device level of the array of monolithic three-dimensional NAND strings;

the silicon substrate contains an integrated circuit comprising a driver circuit for the memory device located thereon; and

the array of monolithic three-dimensional NAND strings comprises:

a plurality of semiconductor channels, wherein at least one end portion of each of the plurality of semiconductor channels extends substantially perpendicular to a top surface of the substrate;

a plurality of charge storage elements, each charge storage element located adjacent to a respective one of the plurality of semiconductor channels; and

a plurality of control gate electrodes having a strip shape extending substantially parallel to the top surface of the substrate, the plurality of control gate electrodes comprise at least a first control gate electrode located in the first device level and a second control gate electrode located in the second device level.

12. A method of forming a monolithic three-dimensional memory device, comprising:

forming a first memory opening through a first stack of first insulating layers and second layers and through an insulating cap layer located over the first stack;

forming a first sacrificial material in a bottom part of the first memory opening;

widening a top part of the first memory opening such that it has a larger width than the bottom part of the first memory opening;

forming a second sacrificial material in the top part of the first memory opening;

forming a second stack of second insulating layers and third layers over the insulating cap layer;

forming a second memory opening through the second stack;

removing the first and second sacrificial material from the first memory opening through the second memory opening; and

forming a semiconductor channel which extends through the bottom part of the first memory opening, the top part of the first memory opening and the second memory opening.

13. The method of claim **12**, wherein:

the step of forming the first memory opening through the first stack of first insulating layers and second layers and through the insulating cap layer located over the first stack comprises forming the first memory opening through a first alternating stack of first insulating layers and first spacer material layers and through the insulating cap layer;

the step of forming the first sacrificial material in the bottom part of the first memory opening comprises forming a sacrificial pillar structure;

the step of widening the top part of the first memory opening such that it has the larger width than the bottom part of the first memory opening comprises forming a recess cavity laterally protruding farther than a sidewall of the first memory opening at an upper portion of the first memory opening;

the step of forming the second sacrificial material in the top part of the first memory opening comprises forming a temporary landing pad by filling the recess cavity with a disposable fill material;

the step of forming the second stack of second insulating layers and third layers over the insulating cap layer comprises forming a second alternating stack of second insulating layers and second spacer material layers over the insulating cap layer;

the step of removing the first and second sacrificial material from the first memory opening through the second memory opening comprises removing the sacrificial pillar structure and the temporary landing pad from underneath the second memory opening to form a laterally protruding cavity; and

forming the semiconductor channel which extends through the bottom part of the first memory opening, the top part of the first memory opening and the second memory opening comprises forming the semiconductor channel in the first memory opening, the laterally protruding cavity, and the second memory opening.

14. The method of claim **13**, further comprising:

forming a first memory film in the first memory opening prior to forming the recess cavity; and

forming a second memory film in the second memory opening prior to removing the temporary landing pad.

15. The method of claim **14**, wherein:

the sacrificial pillar structure includes a sacrificial fill material within the first memory film;

the sacrificial pillar structure is removed prior to forming the semiconductor channel; and

the semiconductor channel is formed in the first and second memory openings during one deposition step such that the semiconductor channel contacts inner sidewalls of the first memory film and the second memory film.

16. The method of claim **15**, wherein the sacrificial pillar structure is formed by:

depositing the sacrificial fill material within a cavity within the first memory film; and

recessing a top surface of the sacrificial fill material below a horizontal plane including a top surface of the insulating cap layer, wherein a remaining portion of the sacrificial fill material constitutes the sacrificial pillar structure which protrudes above a top surface of the first memory film in the recess cavity.

17. The method of claim **16**, wherein the recess cavity is formed by:

removing an upper end portion of the first memory film; and

laterally recessing a physically exposed sidewall of the insulating cap layer.

18. The method of claim **14**, further comprising:

depositing a first memory film layer and a sacrificial material liner over the sidewall of the first memory opening and over the insulating cap layer;

anisotropically etching the sacrificial material liner and the first memory film layer, wherein a remaining portion of the first memory film layer constitutes the first memory film, and the first memory film has an opening at a bottom portion.

19. The method of claim **14**, wherein the first memory film does not contact the second memory film, and the semiconductor channel is formed directly on a sidewall of the insulating cap layer.

20. The method of claim **19**, wherein the semiconductor channel is formed directly on a bottom surface of the second memory film and a top surface of the first memory film.

21. The method of claim **14**, further comprising forming a dielectric core inside the semiconductor channel, wherein the dielectric core comprises:

a laterally protruding portion that laterally extends farther outward than a first portion of the dielectric core surrounded by the first memory film and a second portion of the dielectric core surrounded by the second memory film; and

a neck portion adjoined to the laterally protruding portion and having a lesser lateral extent than the first portion of the dielectric core and the second portion of the dielectric core.

22. The method of claim **13**, wherein:

the three-dimensional memory device comprises a monolithic three-dimensional NAND memory device;

the first and second spacer material layers are formed as, or are replaced with, first and second electrically conductive layers, respectively;

the first and second electrically conductive layers comprise, or are electrically connected to, a respective word line of the monolithic three-dimensional NAND memory device;

the substrate comprises a silicon substrate;

the monolithic three-dimensional NAND memory device comprises an array of monolithic three-dimensional NAND strings over the silicon substrate;

at least one memory cell in a first device level of the array of monolithic three-dimensional NAND strings is located over another memory cell in a second device level of the array of monolithic three-dimensional NAND strings;

the silicon substrate contains an integrated circuit comprising a driver circuit for the memory device located thereon; and

the array of monolithic three-dimensional NAND strings comprises:

a plurality of semiconductor channels, wherein at least one end portion of each of the plurality of semiconductor channels extends substantially perpendicular to a top surface of the substrate;

a plurality of charge storage elements, each charge storage element located adjacent to a respective one of the plurality of semiconductor channels; and

a plurality of control gate electrodes having a strip shape extending substantially parallel to the top surface of the substrate, the plurality of control gate electrodes comprise at least a first control gate electrode located in the first device level and a second control gate electrode located in the second device level.

23. A method of forming a monolithic three-dimensional memory device, comprising:

forming a first memory opening through a first alternating stack of first insulating layers and first spacer material layers and through an insulating cap layer;

forming a first memory film in the first memory opening;

forming a recess cavity laterally protruding farther than a sidewall of the first memory opening at an upper portion of the first memory opening;

forming a temporary landing pad by filling the recess cavity with a disposable fill material;

forming a second alternating stack of second insulating layers and second spacer material layers over the insulating cap layer;

forming a second memory opening through the second alternating stack;

forming a second memory film in the second memory opening prior to removing the temporary landing pad;

removing the temporary landing pad from underneath the second memory opening to form a laterally protruding cavity; and

forming a semiconductor channel in the first memory opening, the laterally protruding cavity, and the second memory opening.

24. The method of claim **23**, wherein:

the first memory film does not contact the second memory film;

the semiconductor channel is formed directly on a sidewall of the insulating cap layer;

the three-dimensional memory device comprises a monolithic three-dimensional NAND memory device; and

the first and second spacer material layers are formed as, or are replaced with, first and second electrically conductive layers, respectively.

25. A method of forming a monolithic three-dimensional memory device, comprising:

forming a first memory opening through a first stack of first insulating layers and second layers and through an insulating cap layer located over the first stack;

forming a first memory film in the first memory opening;

filling the first memory opening;

forming a second stack of second insulating layers and third layers over the insulating cap layer after forming the first memory film in the first memory opening;

forming a second memory opening through the second stack to expose the first memory opening;

forming a second memory film in the second memory opening; and

forming a semiconductor channel in the second memory opening.

* * * * *