US009530866B1

(12) **United States Patent**
Zhang et al.

(10) **Patent No.: US 9,530,866 B1**
(45) **Date of Patent: Dec. 27, 2016**

(54) **METHODS OF FORMING VERTICAL TRANSISTOR DEVICES WITH SELF-ALIGNED TOP SOURCE/DRAIN CONDUCTIVE CONTACTS**

(71) Applicant: **GLOBALFOUNDRIES Inc.**, Grand Cayman (KY)

(72) Inventors: **John H. Zhang**, Altamont, NY (US); **Carl Radens**, LaGrangeville, NY (US); **Steven J. Bentley**, Menards, NY (US); **Brian A. Cohen**, Delmar, NY (US); **Kwan-Yong Lim**, Niskayuna, NY (US)

(73) Assignee: **GLOBALFOUNDRIES Inc.**, Grand Cayman (KY)

(*) Notice: Subject to any disclaimer, the term of this patent is extended or adjusted under 35 U.S.C. 154(b) by 0 days.

(21) Appl. No.: **15/097,621**

(22) Filed: **Apr. 13, 2016**

(51) **Int. Cl.**

H01L 21/02	(2006.01)
H01L 21/265	(2006.01)
H01L 21/3105	(2006.01)
H01L 29/66	(2006.01)

(52) **U.S. Cl.**
CPC ***H01L 29/66666*** (2013.01); ***H01L 21/0217*** (2013.01); ***H01L 21/02126*** (2013.01); ***H01L 21/26513*** (2013.01); ***H01L 21/31051*** (2013.01); ***H01L 29/6653*** (2013.01); ***H01L 29/6656*** (2013.01); ***H01L 29/66545*** (2013.01)

(58) **Field of Classification Search**
None
See application file for complete search history.

(56) **References Cited**

U.S. PATENT DOCUMENTS

5,342,797	A	8/1994	Sapp et al.
5,414,289	A	5/1995	Fitch et al.
6,372,559	B1	4/2002	Crowder et al.
6,686,604	B2	2/2004	Layman et al.
6,690,040	B2	2/2004	Chaudhry et al.
6,759,730	B2	7/2004	Chaudhry et al.
7,241,655	B2	7/2007	Tang et al.
7,465,622	B2	12/2008	Lin
7,666,733	B2	2/2010	Delconibus

(Continued)

OTHER PUBLICATIONS

Hergenrother et al., "The Vertical Replacement-Gate (VRG) MOSFET: A 50-nm Vertical MOSFET with Lithography-Independent Gate Length," IEDM 99-75-78, IEEE 1999.

(Continued)

Primary Examiner — Asok K Sarkar
(74) *Attorney, Agent, or Firm* — Amerson Law Firm, PLLC

(57) **ABSTRACT**

Forming a first sidewall spacer adjacent a vertically oriented channel semiconductor structure ("VCS structure') and adjacent a cap layer, performing at least one planarization process so as to planarize an insulating material and expose an upper surface of the cap layer and an upper surface of the first spacer and removing a portion of the first spacer and an entirety of the cap layer so as to thereby expose an upper surface of the VCS structure and define a spacer/contact cavity above the VCS structure and the first spacer. The method also includes forming a second spacer in the spacer/contact cavity, forming a top source/drain region in the VCS structure and forming a top source/drain contact within the spacer/contact cavity that is conductively coupled to the top source/drain region, wherein the conductive contact physically contacts the second spacer in the spacer/contact cavity.

16 Claims, 15 Drawing Sheets

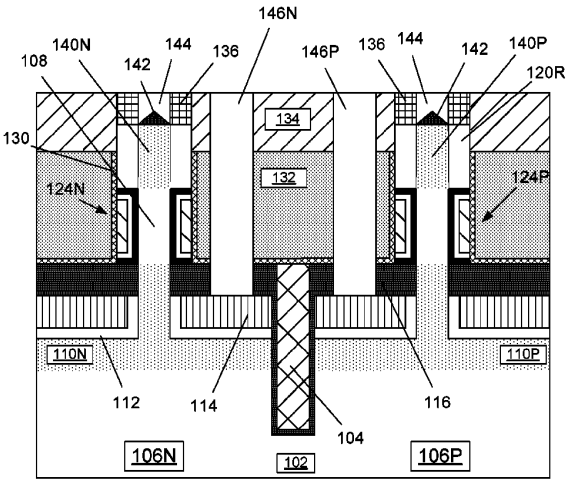

(56) **References Cited**

U.S. PATENT DOCUMENTS

7,700,432	B2	4/2010	Chaudhry et al.	
8,637,849	B2	1/2014	Deligianni et al.	
9,224,840	B2	12/2015	Flachowsky et al.	
9,385,195	B1	7/2016	Zhang	
2003/0047749	A1	3/2003	Chaudhry et al.	
2003/0119237	A1*	6/2003	Chittipeddi	H01L 21/823885 438/199
2007/0111414	A1	5/2007	Chaudhry et al.	
2011/0253981	A1*	10/2011	Rooyackers	B82Y 10/00 257/24
2013/0341270	A1	12/2013	Kar et al.	
2016/0005850	A1*	1/2016	Zhao	H01L 29/781 257/329

OTHER PUBLICATIONS

Notice of Allowance from related U.S. Appl. No. 15/097,574 dated Sep. 14, 2016.

* cited by examiner

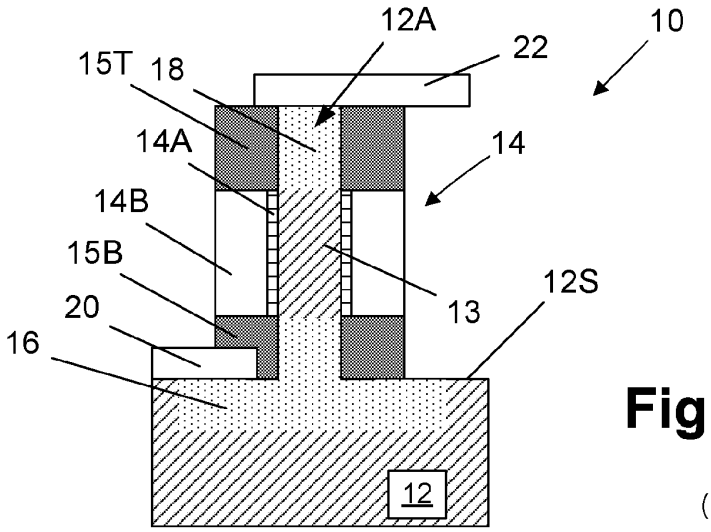

Figure 1A

(Prior Art)

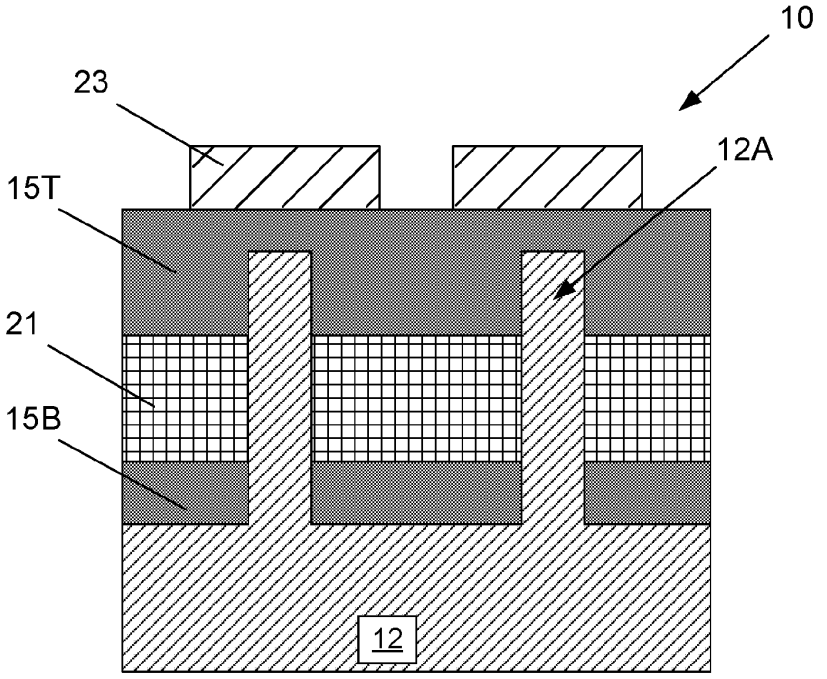

Figure 1B (Prior Art)

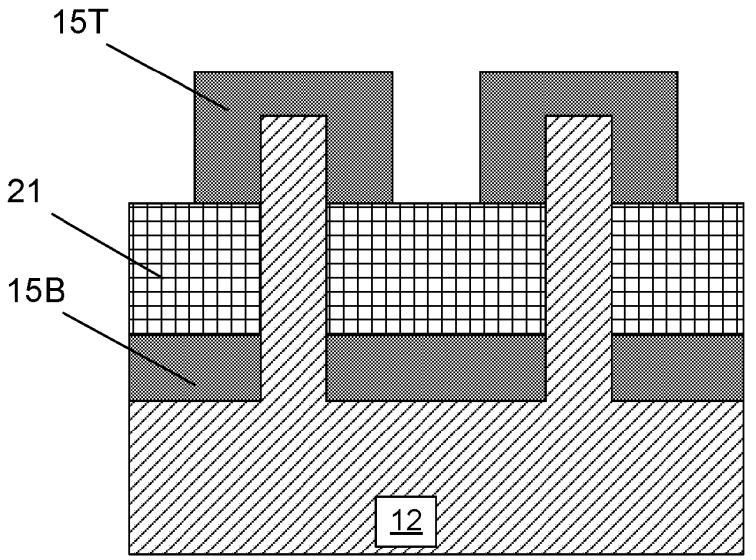

Figure 1C (Prior Art)

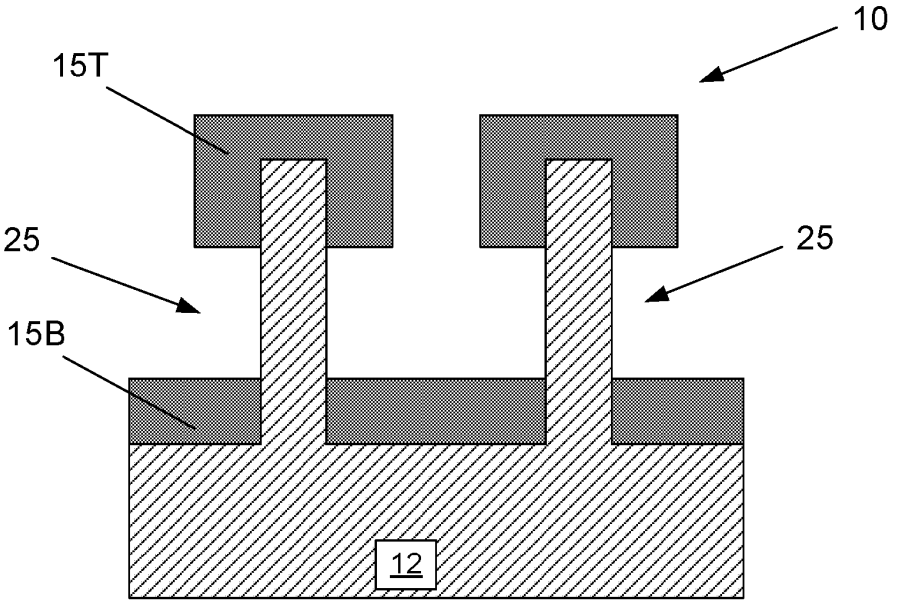

Figure 1D (Prior Art)

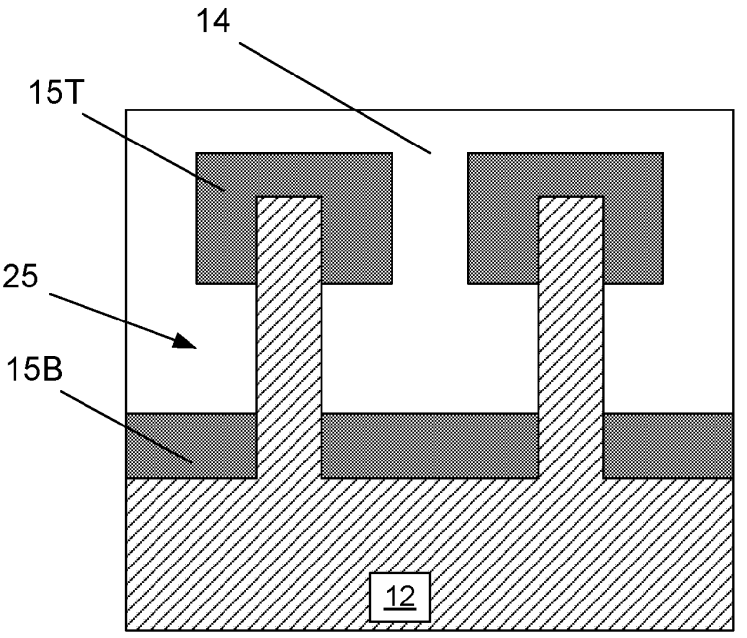

Figure 1E (Prior Art)

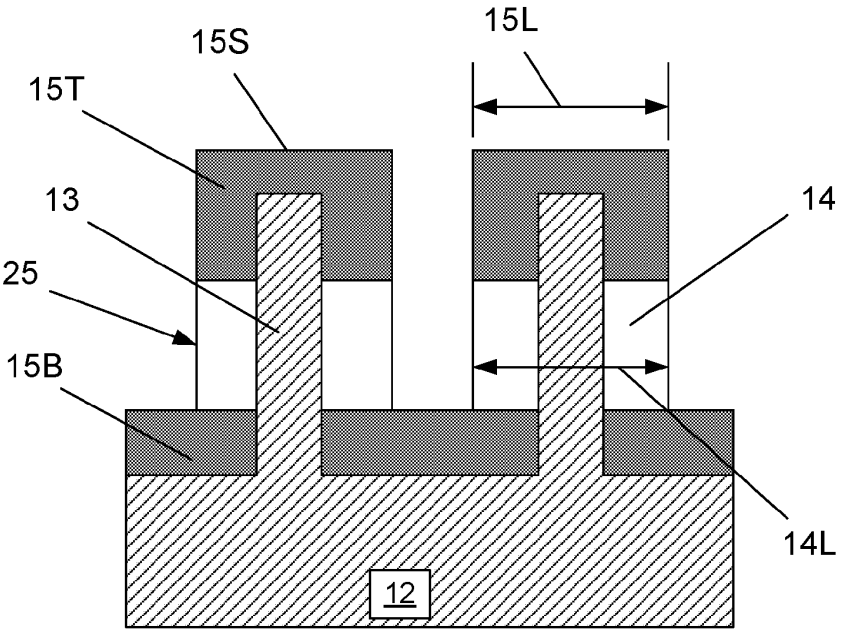

Figure 1F (Prior Art)

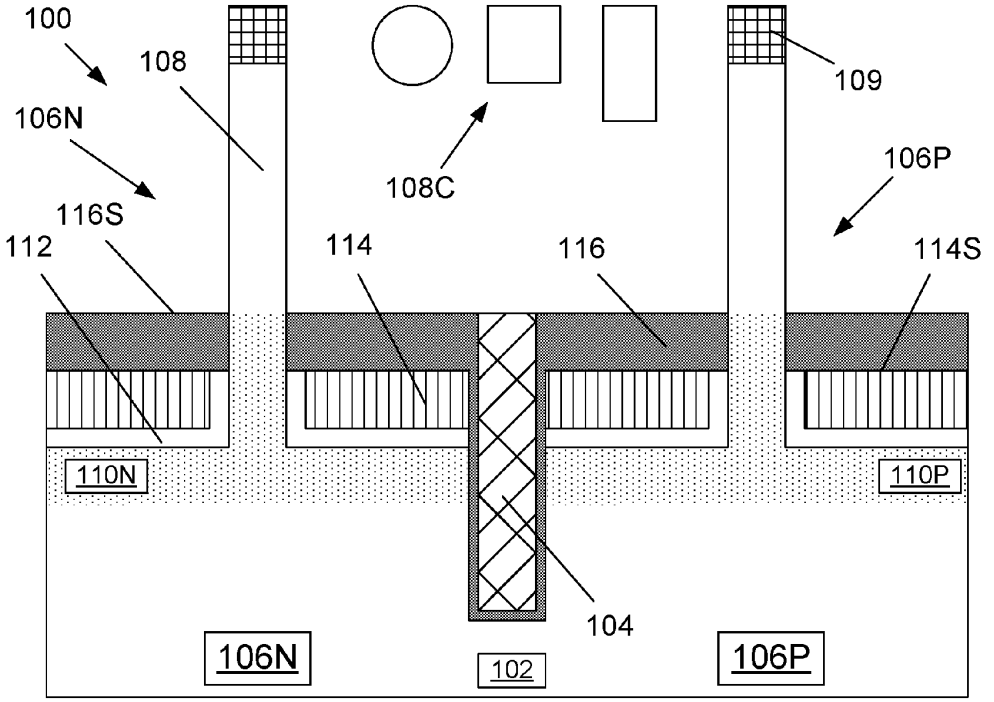

Figure 2A

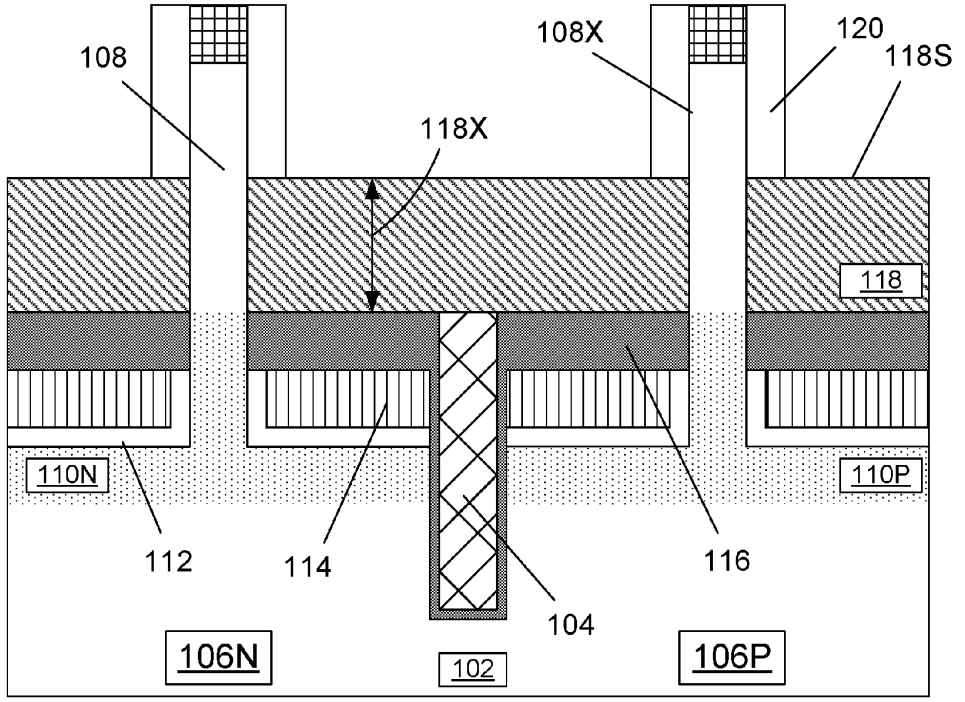

Figure 2B

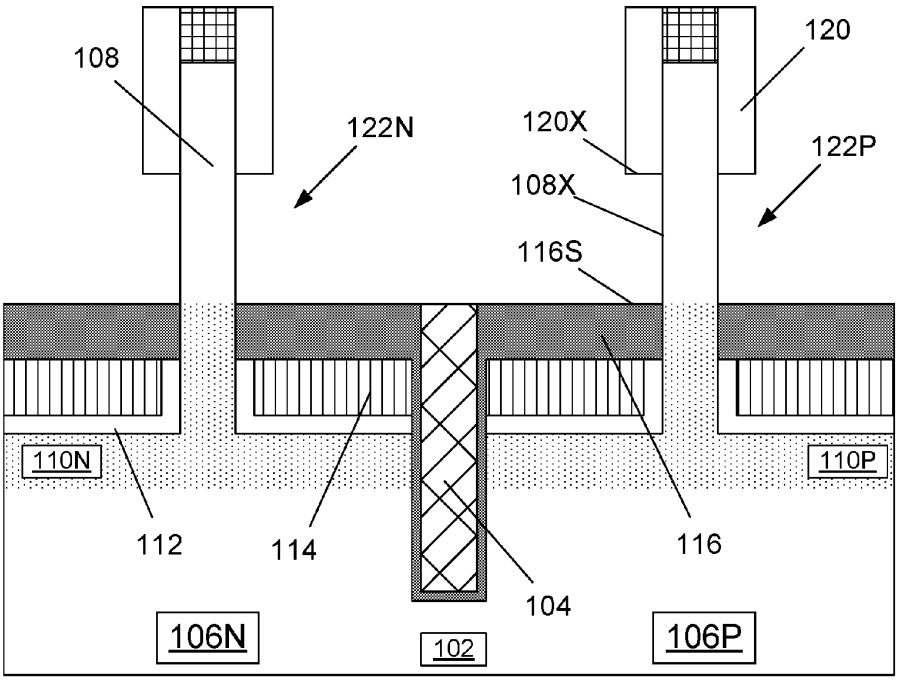

Figure 2C

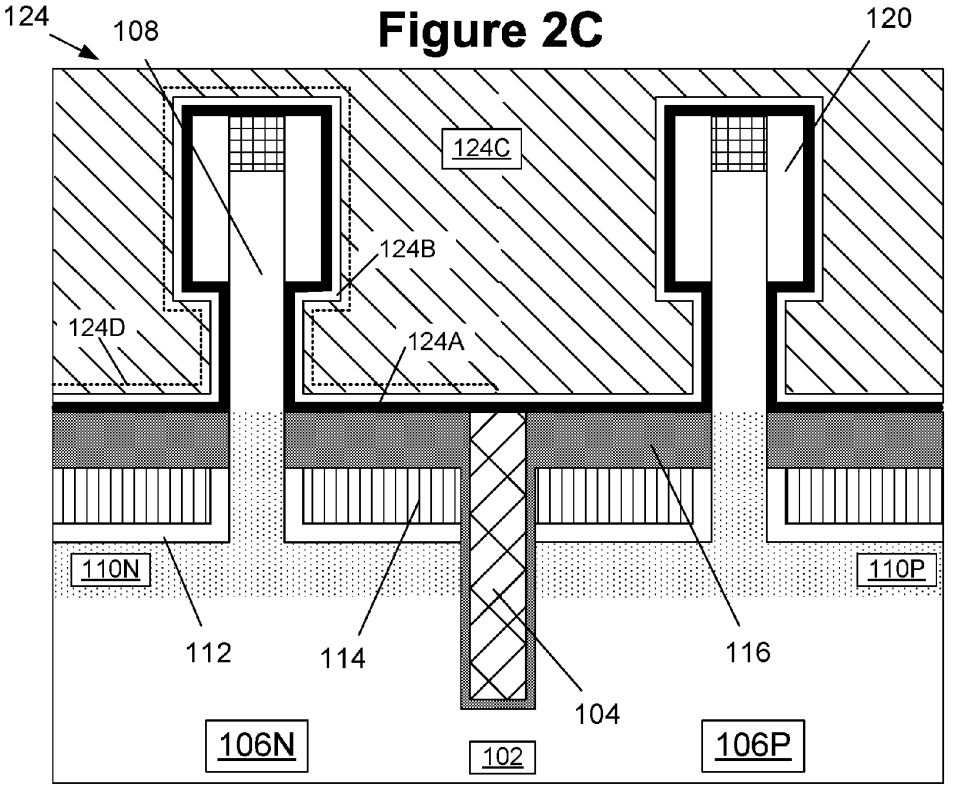

Figure 2D

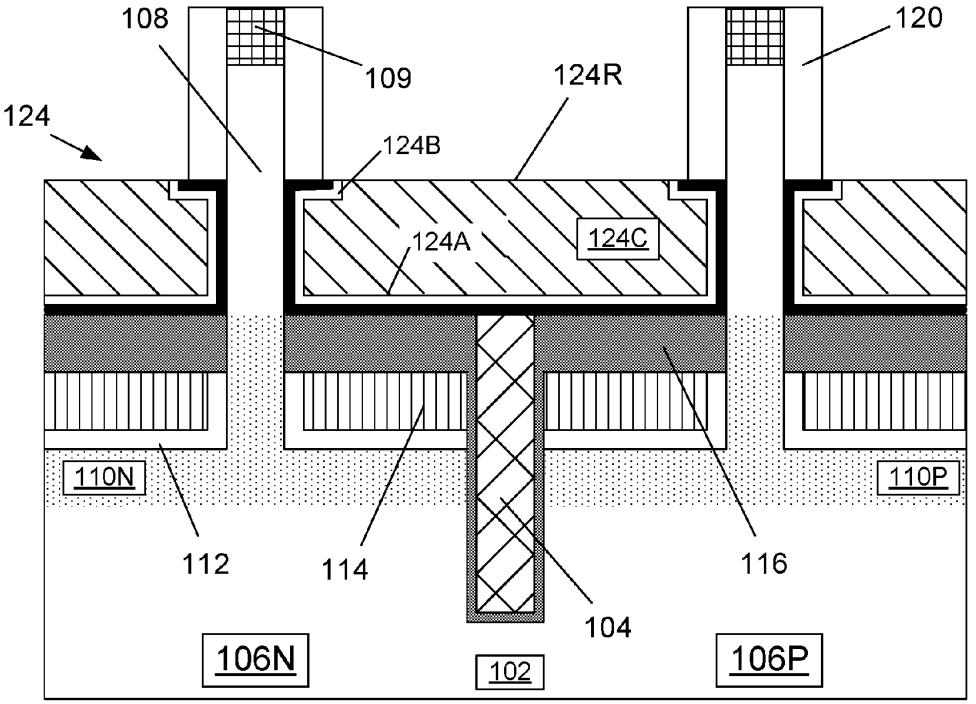

Figure 2E

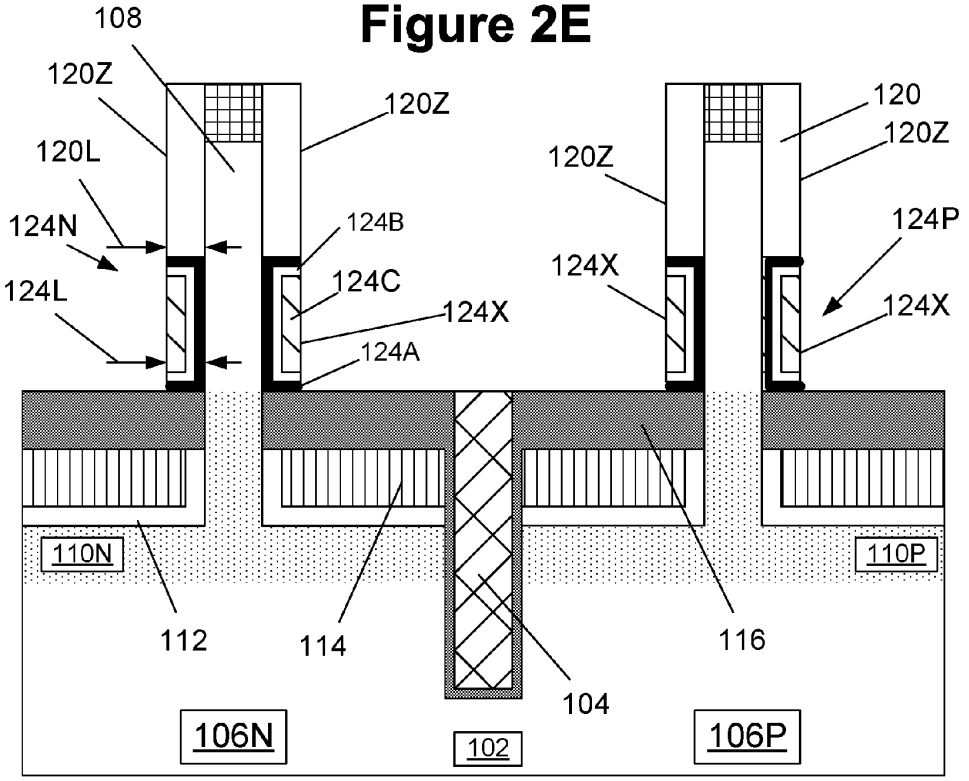

Figure 2F

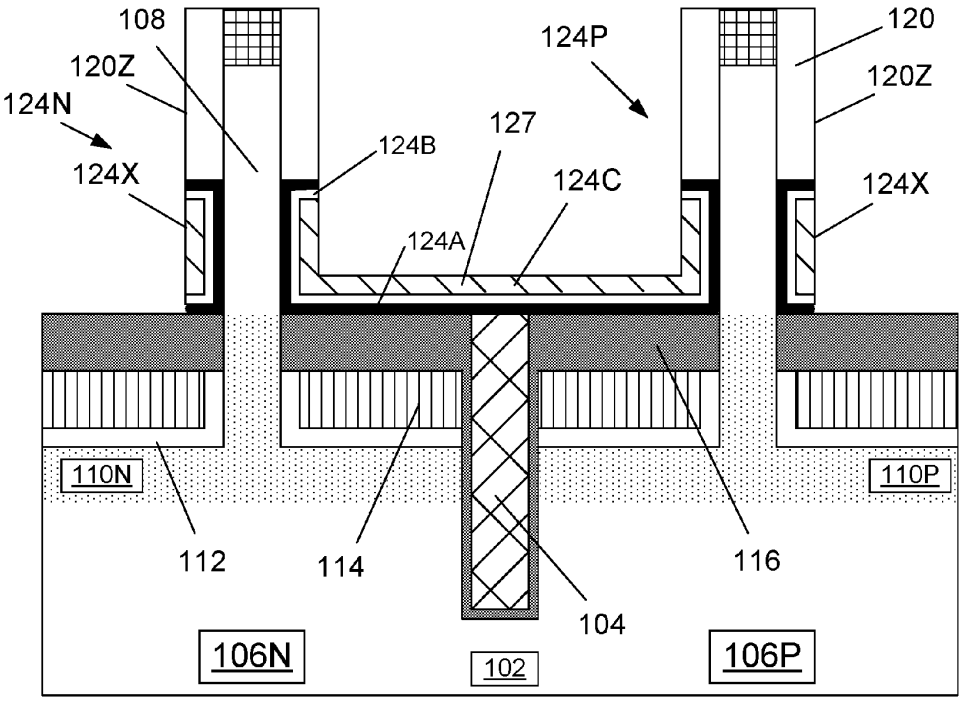

Figure 2G

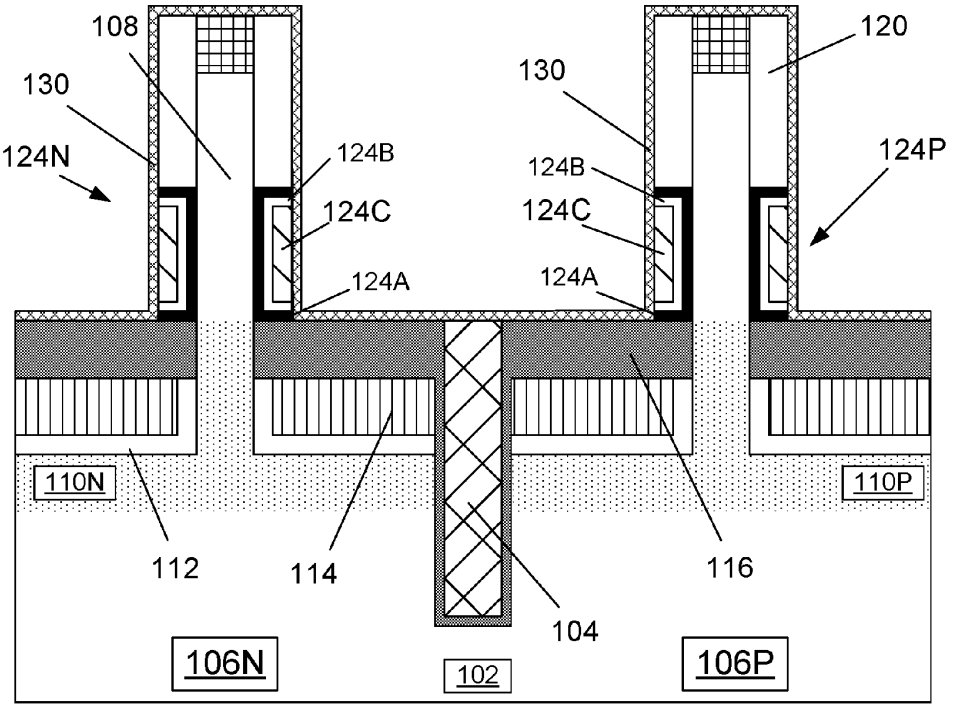

Figure 2H

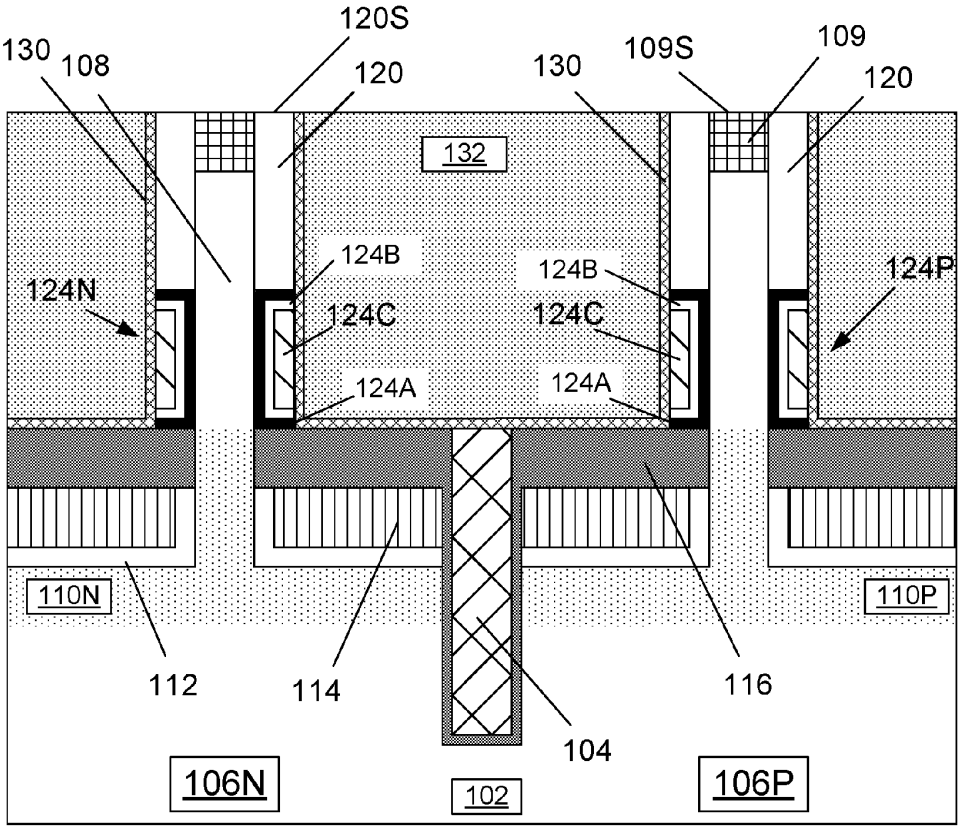
120S
130
108
120
130
109S
109
120
132
124B
124B
124N
124P
124C
124C
124A
124A
110N
110P
112
114
116
104
106N
102
106P

Figure 2I

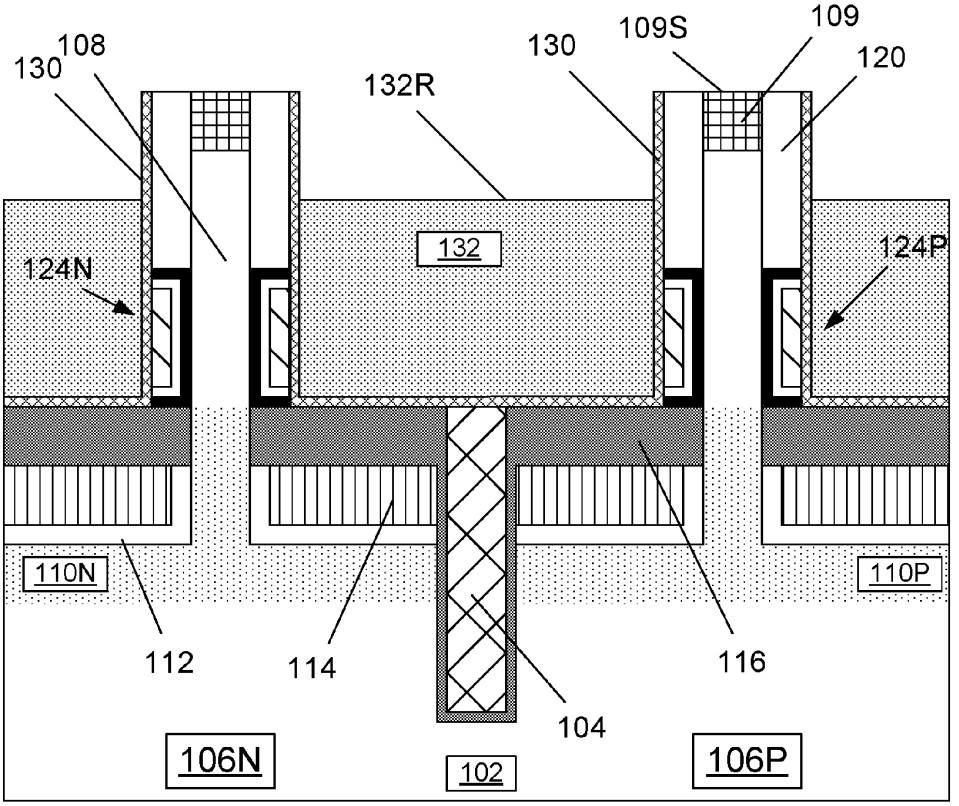
108
130
132R
130
109S
109
120
132
124N
124P
110N
110P
112
114
116
104
106N
102
106P

Figure 2J

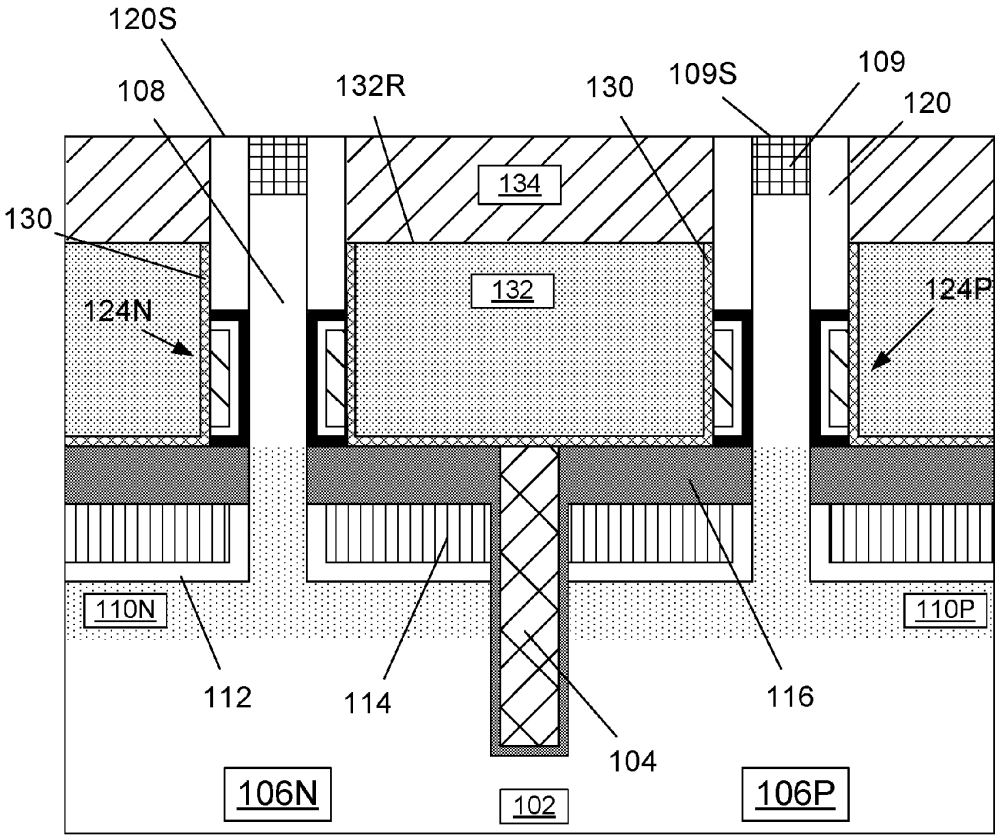
120S
108
132R
130
109S
109
120
134
130
132
124N
124P
110N
110P
112
114
116
104
106N
102
106P

Figure 2K

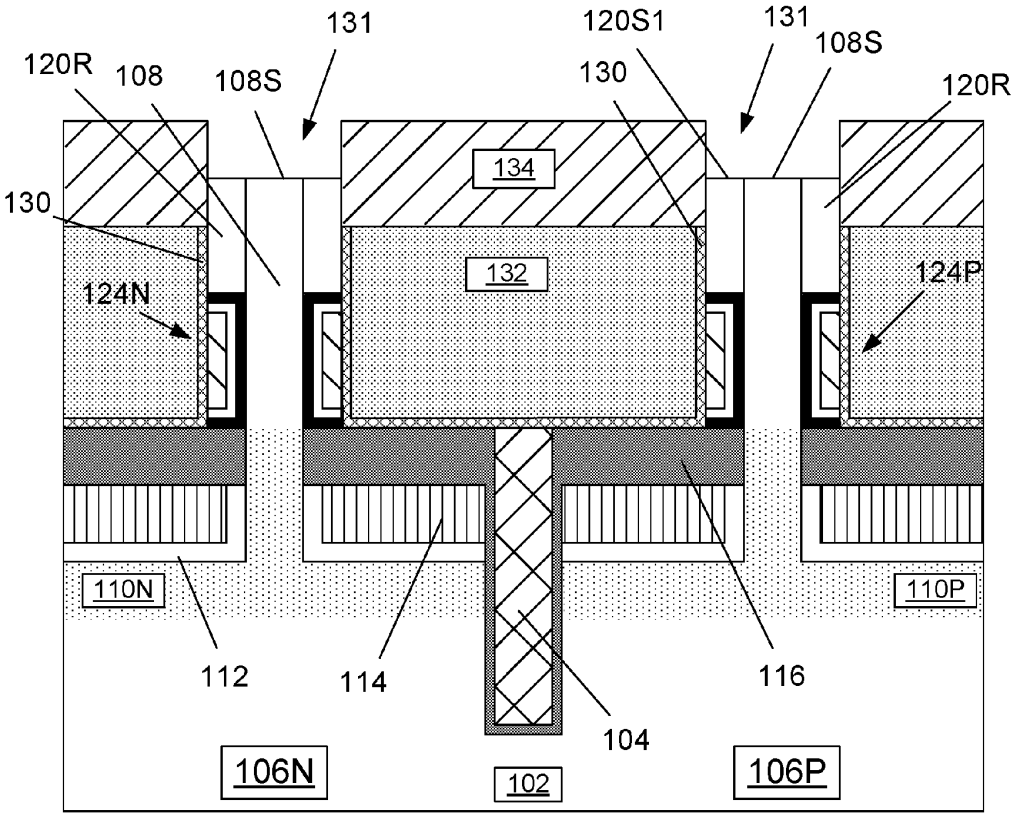
131
120S1
131
108S
120R
108
108S
130
120R
134
130
132
124N
124P
110N
110P
112
114
116
104
106N
102
106P

Figure 2L

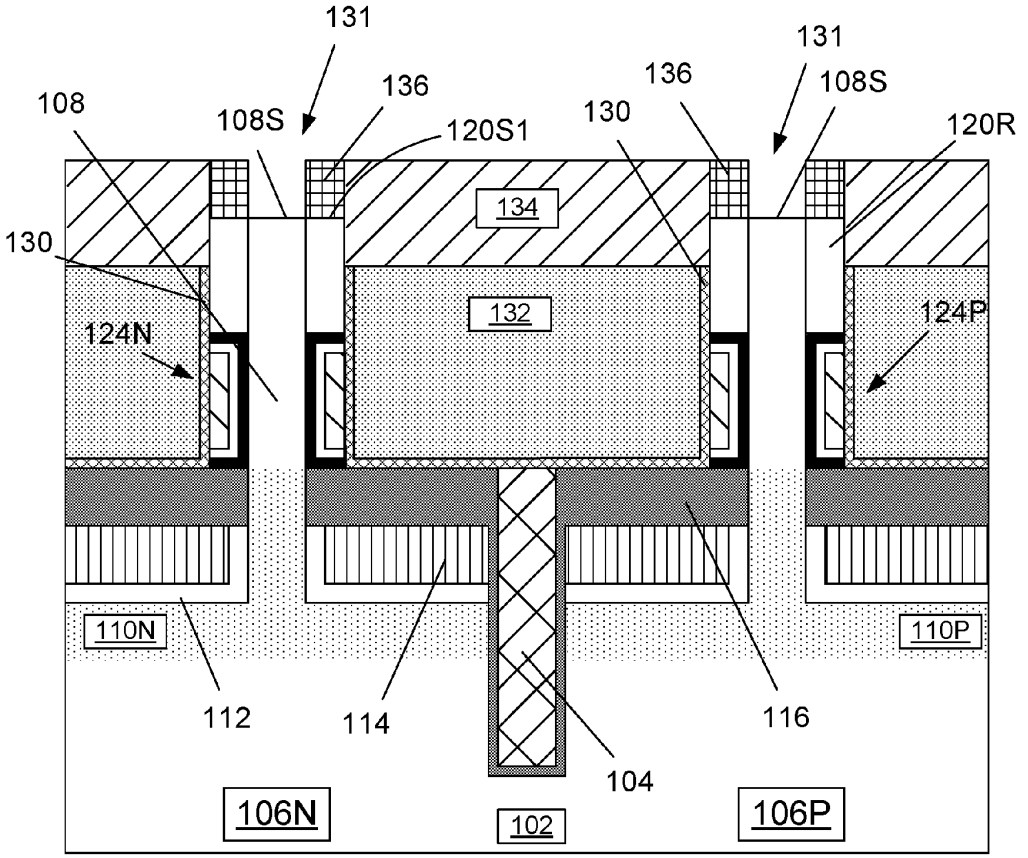
131
136
108
108S
120S1
130
136
131
108S
120R
134
130
132
124N
124P
110N
110P
112
114
116
104
106N
102
106P

Figure 2M

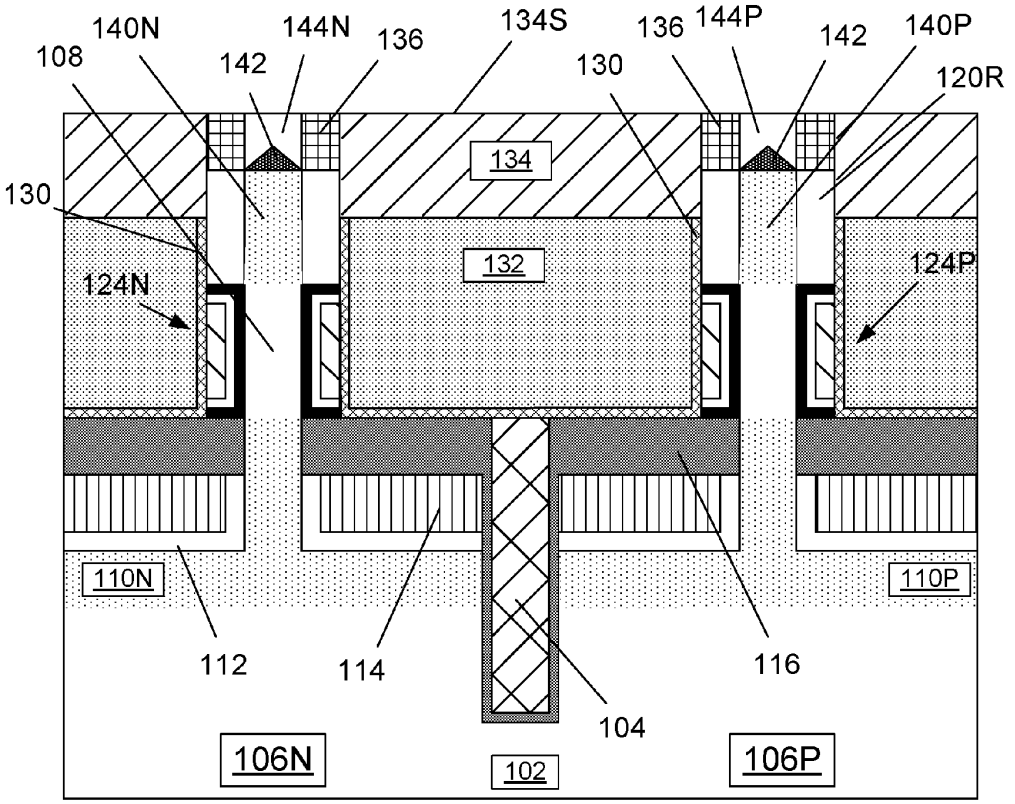
140N
144N
136
134S
136
144P
142
140P
108
142
130
120R
134
130
132
124N
124P
110N
110P
112
114
116
104
106N
102
106P

Figure 2N

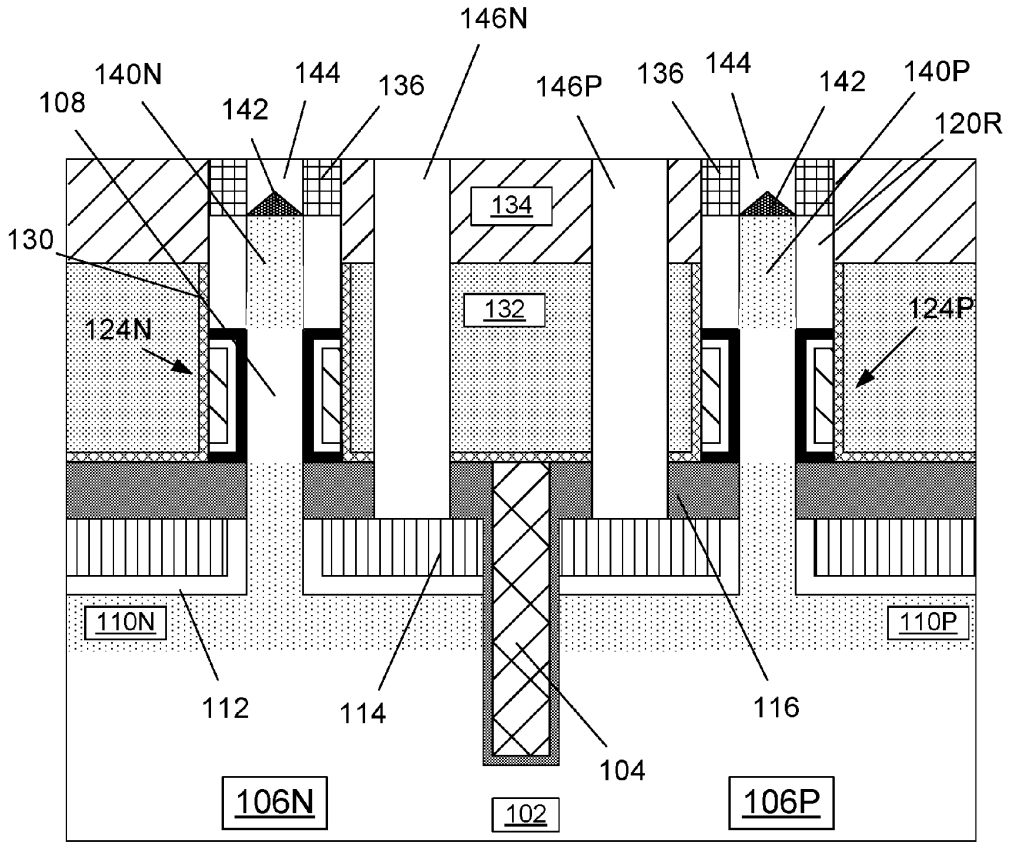
146N
140N
144
136
146P
136
144
142
140P
108
142
120R
134
130
132
124N
124P
110N
110P
112
114
116
104
106N
102
106P

Figure 2O

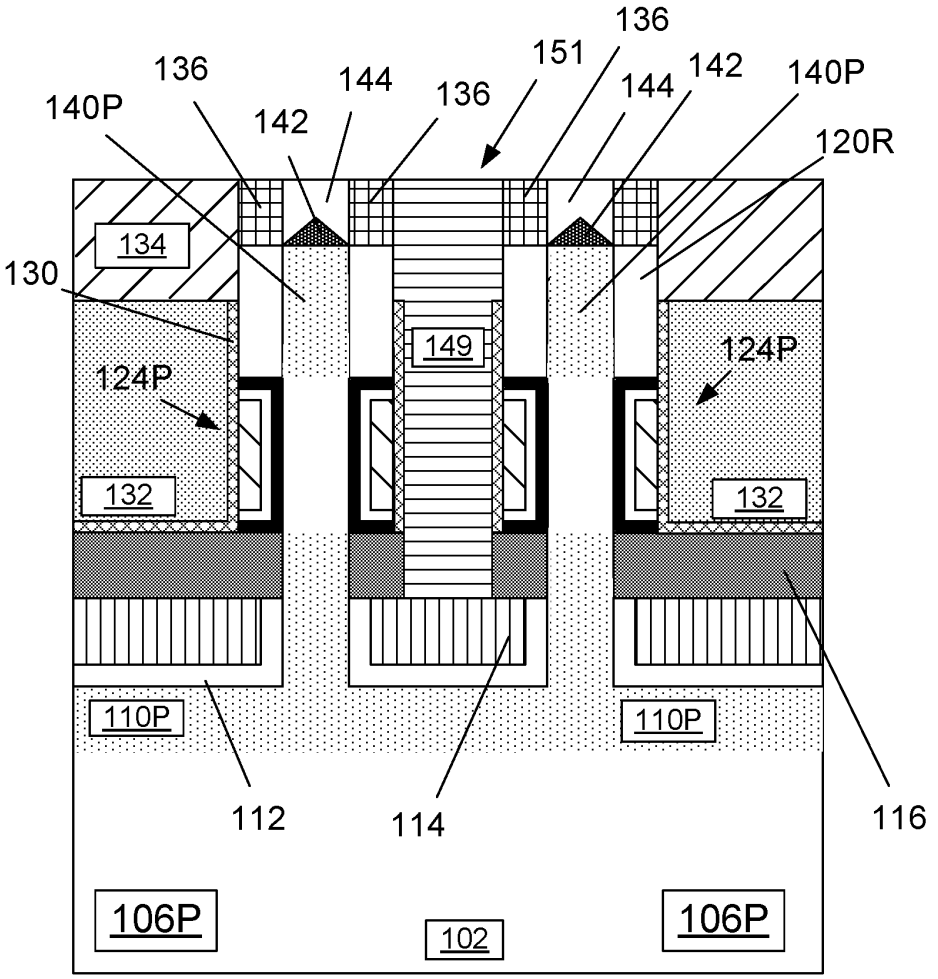
136
151
136
144
142
140P
136
144
142
140P
120R
134
130
149
124P
124P
132
132
110P
110P
112
114
116
106P
102
106P

Figure 2P

METHODS OF FORMING VERTICAL TRANSISTOR DEVICES WITH SELF-ALIGNED TOP SOURCE/DRAIN CONDUCTIVE CONTACTS

BACKGROUND OF THE INVENTION

1. Field of the Invention

Generally, the present disclosure relates to the manufacture of semiconductor devices, and, more specifically, to various novel methods of forming vertical transistor devices with self-aligned top source/drain conductive contacts.

2. Description of the Related Art

In modern integrated circuits, such as microprocessors, storage devices and the like, a very large number of circuit elements, especially transistors, are provided on a restricted chip area. Transistors come in a variety of shapes and forms, e.g., planar transistors, FinFET transistors, nanowire devices, vertical transistors, etc. The transistors are typically either NMOS (NFET) or PMOS (PFET) type devices wherein the "N" and "P" designation is based upon the type of dopants used to create the source/drain regions of the devices. So-called CMOS (Complementary Metal Oxide Semiconductor) technology or products refers to integrated circuit products that are manufactured using both NMOS and PMOS transistor devices. Irrespective of the physical configuration of the transistor device, each device comprises drain and source regions and a gate electrode structure positioned above and between the source/drain regions. Upon application of an appropriate control voltage to the gate electrode, a conductive channel region forms between the drain region and the source region.

FIG. **1**A is a simplistic depiction of an illustrative prior art vertical transistor device **10**. In general, the vertical transistor **10** comprises a generally vertically oriented channel semiconductor structure **12**A that extends upward from a front surface **12**S of a semiconductor substrate **12**. The semiconductor structure **12**A may have a variety of different configurations when viewed from above, e.g., circular, rectangular, square, etc. The device **10** further comprise a channel region **13**, a gate-all-around (GAA) gate structure **14**, a bottom source/drain (S/D) region **16**, a top S/D region **18**, a bottom spacer **15**B and a top spacer **15**T. Also depicted is an illustrative bottom contact **20** that is conductively coupled to the bottom S/D region **16** and a top contact **22** that is conductively coupled to the top S/D region **18**. In the depicted example, the gate structure **14** comprises a gate insulation layer **14**A and a conductive gate electrode **14**B. The materials of construction for the components of the device **10** may vary depending upon the particular application.

For many early device technology generations, the gate electrode structures of most transistor elements has comprised a plurality of silicon-based materials, such as a silicon dioxide and/or silicon oxynitride gate insulation layer, in combination with a polysilicon gate electrode. However, as the channel length of aggressively scaled transistor elements has become increasingly smaller, many newer generation devices employ gate electrode stacks comprising alternative materials in an effort to avoid the short-channel effects which may be associated with the use of traditional silicon-based materials in reduced channel length transistors. For example, in some aggressively scaled transistor elements, gate electrode stacks comprising a so-called high-k dielectric/metal gate (HK/MG) configuration have been shown to provide significantly enhanced operational characteristics over the heretofore more commonly used silicon dioxide/polysilicon (SiO/poly) configurations.

One well-known processing method that has been used for forming a transistor with a high-k/metal gate structure is the so-called "gate last" or "replacement gate" technique. In the replacement gate technique, a so-called "dummy" or sacrificial gate structure is initially formed and remains in place as many process operations are performed to form the device, e.g., the formation of doped source/drain regions, performing an anneal process to repair damage to the substrate caused by the ion implantation processes and to activate the implanted dopant materials. At some point in the process flow, the sacrificial gate structure is removed to define a gate cavity where the final HK/MG gate structure for the device is formed.

FIGS. **1**B-**1**F simplistically depict one illustrative prior art process flow that is employed to form replacement gate structures on vertical transistor devices. FIG. **1**B depicts the device **10** after several process operations were performed. First, a plurality of the above-described vertically oriented channel semiconductor structures **12**A are formed above the substrate **12**. Thereafter, several layers of material were sequentially deposited above the substrate: a layer of spacer material for the bottom spacer **15**B, a sacrificial layer of material **21** (e.g., silicon dioxide) and a layer of spacer material for the top spacer **15**T. Also depicted in FIG. **1**B is a patterned etch mask layer **23**. The patterned etch mask **23** may be made of a variety of different materials, e.g., photoresist, a combination of layers, etc.

FIG. **1**C depicts the device **10** after an etching process was performed through the patterned etch mask **23** to remove the exposed portions of the top spacer layer **15**T. The etching process stops on the sacrificial layer **21**. FIG. **1**C depicts the device after the patterned etch mask **23** was removed.

FIG. **1**D depicts the device after a wet etching process was performed to remove the sacrificial layer **21** relative to the surrounding materials so as to define a plurality of replacement gate cavities **25**.

FIG. **1**E depicts the device **10** after simplistically depicted materials **14** for the replacement gate structure were formed so as to overfill the replacement gate cavities **25**. The materials **14** for the replacement gate structure would normally include a high-k gate insulation layer (not separately shown), one or more additional metal-containing layers (e.g., work function adjusting metal layers), such as titanium nitride, and a bulk conductive fill material, such as tungsten or polysilicon. The high-k insulation layer and the additional metal-containing layers are typically formed by performing a conformal deposition process.

FIG. **1**F depicts the device **10** after several process operations were performed. First, a chemical mechanical planarization (CMP) process was performed to planarize the upper surface of the gate materials **14** with the upper surface **15**S of the patterned top spacer layer **15**T. Thereafter, one or more anisotropic etching processes were performed to remove exposed portions of the gate materials **14**, wherein the etching process ultimately stops on the layer of bottom spacer material **15**B. As depicted, these operations result in the formation of separate GAA gate structures **14** that wrap around the channel portion **13** of the devices. Importantly, using this prior art process flow, the gate structures **14** are not self-aligned in that the lateral width **14**L of the gate structure **14** is approximately defined by the lateral width **15**L of the patterned features of the top spacer layer **15**T. Since these features are defined by a patterning process, e.g., masking and etching, the control of the exact size and exact positioning of these patterned features is subject to the

problems generally encountered when defining features using patterning processes such as, for example, positional accuracy relative to other structures (like the structures **12**A), pattern transfer variations, etc. These types of issues are only expected to be more problematic as device dimensions continue to decrease with advancing technology.

The present disclosure is directed to methods of forming vertical transistor devices with self-aligned top source/drain conductive contacts that may solve or reduce one or more of the problems identified above.

SUMMARY OF THE INVENTION

The following presents a simplified summary of the invention in order to provide a basic understanding of some aspects of the invention. This summary is not an exhaustive overview of the invention. It is not intended to identify key or critical elements of the invention or to delineate the scope of the invention. Its sole purpose is to present some concepts in a simplified form as a prelude to the more detailed description that is discussed later.

Generally, the present disclosure is directed to various novel methods of forming vertical transistor devices with a self-aligned top source/drain conductive contact. One illustrative method disclosed herein includes, among other things, forming a vertically oriented channel semiconductor structure with a cap layer positioned thereabove, forming a first sidewall spacer adjacent the vertically oriented channel semiconductor structure and adjacent the cap layer, forming a layer of insulating material adjacent the first sidewall spacer, and performing at least one planarization process so as to planarize an upper surface of the layer of insulating material and expose an upper surface of the cap layer and an upper surface of the first sidewall spacer. In this example, the method also includes performing at least one etching process to remove a portion of the first sidewall spacer and to remove an entirety of the cap layer so as to thereby expose an upper surface of the vertically oriented channel semiconductor structure and define a spacer/contact cavity above the vertically oriented channel semiconductor structure and the first sidewall spacer, forming a second spacer in the spacer/contact cavity, wherein, after formation of the second spacer, at least a portion of the upper surface of the vertically oriented channel semiconductor structure remains exposed, after forming the second spacer, forming a top source/drain region in the vertically oriented channel semiconductor structure and forming a top source/drain contact within the spacer/contact cavity that is conductively coupled to the top source/drain region, wherein the conductive contact physically contacts the second spacer in the spacer/contact cavity.

BRIEF DESCRIPTION OF THE DRAWINGS

The disclosure may be understood by reference to the following description taken in conjunction with the accompanying drawings, in which like reference numerals identify like elements, and in which:

FIGS. **1**A-**1**F simplistically depict an illustrative prior art vertical transistor device and a prior art method of forming a replacement gate structure on such a device; and

FIGS. **2**A-**2**P depict various illustrative novel methods disclosed herein for forming vertical transistor devices with a self-aligned top source/drain conductive contact.

While the subject matter disclosed herein is susceptible to various modifications and alternative forms, specific embodiments thereof have been shown by way of example in the drawings and are herein described in detail. It should be understood, however, that the description herein of specific embodiments is not intended to limit the invention to the particular forms disclosed, but on the contrary, the intention is to cover all modifications, equivalents, and alternatives falling within the spirit and scope of the invention as defined by the appended claims.

DETAILED DESCRIPTION

Various illustrative embodiments of the invention are described below. In the interest of clarity, not all features of an actual implementation are described in this specification. It will of course be appreciated that in the development of any such actual embodiment, numerous implementation-specific decisions must be made to achieve the developers' specific goals, such as compliance with system-related and business-related constraints, which will vary from one implementation to another. Moreover, it will be appreciated that such a development effort might be complex and time-consuming, but would nevertheless be a routine undertaking for those of ordinary skill in the art having the benefit of this disclosure.

The present subject matter will now be described with reference to the attached figures. Various structures, systems and devices are schematically depicted in the drawings for purposes of explanation only and so as to not obscure the present disclosure with details that are well known to those skilled in the art. Nevertheless, the attached drawings are included to describe and explain illustrative examples of the present disclosure. The words and phrases used herein should be understood and interpreted to have a meaning consistent with the understanding of those words and phrases by those skilled in the relevant art. No special definition of a term or phrase, i.e., a definition that is different from the ordinary and customary meaning as understood by those skilled in the art, is intended to be implied by consistent usage of the term or phrase herein. To the extent that a term or phrase is intended to have a special meaning, i.e., a meaning other than that understood by skilled artisans, such a special definition will be expressly set forth in the specification in a definitional manner that directly and unequivocally provides the special definition for the term or phrase. To the extent the term "adjacent" is used herein and in the attached claims to described a positional relationship between two components or structures, that term should be understood and construed so as to cover situations where there is actual physical contact between the two components and to cover situations where such components are positioned near one another but there is no physical contact between the two components. Physical contact between two components will be specified within the specification and claims by use of the phrase "on and in contact with" or other similar language. As will be readily apparent to those skilled in the art upon a complete reading of the present application, the methods disclosed herein may be employed in manufacturing a variety of different devices, including, but not limited to, logic devices, memory devices, etc., and the devices may be may be either NMOS or PMOS devices.

As will be appreciated by those skilled in the art after a complete reading of the present application, various doped regions, e.g., halo implant regions, well regions and the like, are not depicted in the attached drawings. Of course, the inventions disclosed herein should not be considered to be limited to the illustrative examples depicted and described herein. The various components and structures of the integrated circuit product **100** disclosed herein may be formed

using a variety of different materials and by performing a variety of known techniques, e.g., a chemical vapor deposition (CVD) process, an atomic layer deposition (ALD) process, a thermal growth process, spin-coating techniques, etc. The thicknesses of these various layers of material may also vary depending upon the particular application. With reference to the attached figures, various illustrative embodiments of the methods and devices disclosed herein will now be described in more detail.

FIG. **2**A depicts one illustrative embodiment of an integrated circuit product **100** disclosed herein at an early stage of fabrication wherein several process operations have already been performed. In general, the product **100** will be formed in and above a substrate **102**. The substrate **102** may have a variety of configurations, such as the depicted bulk silicon configuration. The substrate **102** may also have a semiconductor-on-insulator (SOI) or a silicon-on-insulator configuration that includes a bulk silicon layer, a buried insulation layer (silicon dioxide) and an active layer (silicon), wherein semiconductor devices are formed in and above the active layer. The substrate **102** may be made of silicon or it may be made of materials other than silicon. Thus, the terms "substrate" or "semiconductor substrate" should be understood to cover all semiconducting materials and all forms of such materials.

With continuing reference to FIG. **2**A, the product **100** is generally comprised of an N-type vertical transistor device **106**N and a P-type vertical transistor device **106**P. An illustrative isolation region **104** separates the two devices **106**N, **106**P. As depicted, a vertically oriented channel semiconductor structure **108** has been formed for each of the devices **106**N, **106**P. The vertically oriented channel semiconductor structures **108** may have a variety of different configurations **108**C when viewed from above, e.g., circular, square, rectangular, etc., as indicated in FIG. **2**A. In the depicted example, the vertically oriented channel semiconductor structures **108** are defined by performing one or more etching processes through a patterned etch mask **109**. In the illustrative example depicted in the attached figures, the vertically oriented channel semiconductor structures **108** are all of a uniform size and shape. However, such uniformity in the size and shape of the vertically oriented channel semiconductor structures **108** is not required to practice at least some aspects of the inventions disclosed herein. In the example depicted herein, the vertically oriented channel semiconductor structures **108** are depicted as having been formed by performing an anisotropic etching process. In other cases, the vertically oriented channel semiconductor structures **108** may be formed in such a manner that they have a tapered cross-sectional configuration (wider at the bottom than at the top at this point in the process flow). Thus, the size and configuration of the vertically oriented channel semiconductor structures **108** and the manner in which they are made should not be considered a limitation of the present invention.

Also depicted in FIG. **2**A are bottom source/drain (S/D) regions **110**N, **110**P, a conductive liner **112** (e.g., tungsten silicide), a conductive metal layer **114** (e.g., tungsten) and a bottom spacer layer **116** (e.g., silicon nitride). All of the layers of material **112**, **114** and **116** are formed around the entire outer perimeter of the vertically oriented channel semiconductor structures **108**. The conductive liner **112** and the conductive metal layer **114** collectively constitute a bottom electrode for the devices **106**N, **106**P that may be used to conductively contact their respective bottom S/D regions **110**N, **110**P. The bottom S/D region **110**N comprises N-type dopant atoms, while the bottom S/D region **110**P comprises P-type dopant atoms, and they may be formed by performing one or more ion implantation processes through patterned implant masks (not shown). The implantation processes that are performed to form the bottom S/D regions **110**N, **110**P may be performed before or after the formation of the vertically oriented channel semiconductor structures **108**. The conductive liner **112** may be formed by performing a conformal deposition process and its thickness may vary depending upon the particular application. After the formation of the metal layer **114**, a recess etching process may be performed to remove portions of the conductive liner **112** from the sides of the vertically oriented channel semiconductor structures **108** and to recess the conductive metal layer **114** such that it has a recessed upper surface **114**S as depicted in FIG. **2**A. Thereafter, the bottom spacer layer **116** was deposited and recessed such that it has it has a recessed upper surface **116**S as depicted in FIG. **2**A.

FIG. **2**B depicts the product **100** after several process operations were performed. First, a sacrificial layer of material **118** (e.g., silicon dioxide) was formed above the bottom spacer layer **116** and around the entire outer perimeter of the vertically oriented channel semiconductor structures **108**. The sacrificial layer of material **118** was formed such that it has a recessed upper surface **118**S positioned at the location depicted in FIG. **2**B. In some applications, the sacrificial layer of material **118** may be initially deposited and then a recess etching process may be performed on the sacrificial layer of material **118** such that it has the depicted recessed upper surface **118**S. However, depending upon the manner in which the sacrificial layer of material **118** was formed, in other applications, the surface **118**S may be an as-deposited surface. As will be explained more fully below, the vertical thickness **118**X of the sacrificial layer of material **118** will generally correspond to the gate length of the devices **106**N, **106**P and the vertical height of replacement gate cavities for the devices **106**N, **106**P.

With continuing reference to FIG. **2**B, a sidewall spacer **120** was then formed adjacent each of the vertically oriented channel semiconductor structures **108** above the surface **118**S of the sacrificial layer of material **118**. In the depicted example, the spacers **120** are formed on and in contact with the outer surface or sidewall **108**X (which may have only a single sidewall if the vertically oriented channel semiconductor structures **108** have a generally circular configuration when viewed from above) of the vertically oriented channel semiconductor structures **108**. The spacers **120** were formed by depositing a layer of spacer material (e.g., silicon nitride, SiOCN, etc.) and thereafter performing an anisotropic etching process. In one illustrative embodiment, the spacers **120** may have a lateral width at the base of the spacer **120** that falls within the range of about 4-8 nm.

FIG. **2**C depicts the product **100** after a wet etching process was performed to remove the sacrificial material layer **118** relative to the surrounding materials. The removal of the sacrificial material layer **118** results in the formation of a replacement gate cavity **122**N for the N-type device **106**N and a replacement gate cavity **122**P for the P-type device **106**P. The replacement gate cavities **122**N, **122**P will generally be referred to by using the reference number **122**. As depicted, the replacement gate cavities **122**N, **122**P is the area between the bottom surface **120**X of the sidewall spacer **120** and the surface **116**S of the layer of bottom spacer material **116**. The replacement gate cavities **122**N, **122**P expose a portion of the sidewall **108**X of the vertically oriented channel semiconductor structures **108**.

FIG. **2**D depicts the product after gate materials **124** for the replacement gate structures for the devices **106**N, **106**P

were formed in the replacement gate cavities **122**. In one illustrative example, the same gate materials **124** may be used for the replacement gate structures for both of the devices **106**N, **106**P. In other applications, by formation of appropriate masking layers (not shown), the gate materials **124** used for the devices **106**N, **106**P may be different. In the example depicted in FIG. **2**D, the gate materials **124** comprise a gate insulation layer **124**A, a metal-containing layer **124**B and a bulk conductive material layer **124**C. In one example, an additional conductive layer **124**D (shown as a dashed line) may be formed for the N-type device **106**N while the P-type device **106**P is masked. The thickness and composition of these materials may vary depending upon the particular application, and the relative thickness of these layers of material shown in the drawings is not to scale.

In one illustrative embodiment, the layer of insulating material **124**A may be made of a high-k (k value of 10 or greater) insulating material, such as hafnium oxide, while the metal-containing layer **124**B may be made of a material such as titanium nitride. The bulk conductive material layer **124**C may be comprised of a material such as tungsten or a doped polysilicon. The layers **124**A, **124**B (and **124**D if present) may be formed by performing a conformal deposition process such as an ALD process.

FIG. **2**E depicts the product **100** after several process operations were performed to remove portions of the gate materials **124**. In one example, one or more etching processes were performed to remove various portions of the gate materials **124** positioned around the spacers **120** and above the mask layer **109** so as to arrive at the structure depicted in the drawing wherein the gate materials **124** (collectively) have a recessed surface **124**R. Arriving at the structure depicted in FIG. **2**E may involve performing a single etching process with an etchant that can remove all of the materials **124**A, **124**B and **124**C at more or less the same rate. In other applications, to arrive at the structure depicted in FIG. **2**E, several etching processes with different etchants may be employed to remove portions of the materials **124**A, **124**B and/or **124**C relative to surrounding materials.

At the point depicted in FIG. **2**E, there are at least two options for proceeding with the manufacture of the product **100**. As shown in FIG. **2**F, one option involves performing an anisotropic etching process that stops on the bottom spacer layer **116** to remove the exposed gate materials **124** that are not protected by the spacers **120**. This operation results in the definition of a self-aligned replacement gate structure **124**N for the N-type device **106**N and a self-aligned gate structure **124**P for the P-type device **106**P. The gate structures **124**N, **124**P are self-aligned in the sense that the lateral width **124**L of the gate structures **124**N, **124**P on each side of the vertically oriented channel semiconductor structures **108** is defined by the lateral width **120**L of the spacer **120**. That is, an outer side surface **124**X of each of the replacement gate structures **122**N, **122**P is substantially vertically aligned with an outer side surface **120**Z of its respective sidewall spacer **120**.

As shown in FIG. **2**G, another option involves performing a timed anisotropic etching process within the bulk conductive material layer **124**C to remove the exposed gate materials **124** that are not protected by the spacers **120**. In this embodiment, the gate structures **124**N and **124**P are conductively coupled to one another by a local interconnect structure **127** that may be comprised of the layer of conductive material (e.g., **124**C and or **124**B) that is present in both of the replacement gate structures **122**N, **122**P. After the formation of the local interconnect structure **127**, the local interconnect structure **127** may be masked and the remaining portions of the gate materials **124** not protected by sidewall spacers **120** may be removed. Of course, if desired, the processing could be reversed by use of the appropriate masking layers. Such a product with a local interconnect structure **127** might be beneficial in certain applications, e.g., SRAM products, where such gate structures are sometimes conductively coupled to one another by the formation of separate local interconnect structures. Even with the formation of the local interconnect structure **127**, the gate structures **124**N, **124**P are still considered to be self-aligned gate structures. After a complete reading of the present application, those skilled in the art will appreciate that, when starting with the structure depicted in FIG. **2**D (i.e., after the formation of the gate materials **124** so as to overfill the gate cavities **124**), one or more etching processes may be performed to arrive at the structure depicted in either FIG. **2**F or **2**G, wherein the structure depicted in FIG. **2**E may simply reflect the product **100** at some point during the process. For ease of reference, subsequent drawings will only depict the embodiment shown in FIG. **2**F wherein separate gate structures **124**N, **124**P were formed.

FIG. **2**H depicts the product after a non-conductive liner layer **130**, e.g., silicon nitride, was formed on the product by performing a conformal deposition process. The thickness of the liner layer **130** may vary depending upon the particular application, e.g., 3-6 nm.

FIG. **2**I depicts the product **100** after several process operations were performed. First, a layer of insulating material **132**, e.g., a flowable oxide, was formed above the product **100**. Thereafter, at least one chemical mechanical polishing (CMP) process was performed to planarize the upper surface of the insulating material **132** with the upper surface **109**S of the patterned hard mask layer **109**. In effect, the features of the hard mask layer **109** are cap layers or protective layers that protect the underlying vertically oriented channel semiconductor structures **108**. This process operation also removes the liner layer **130** from above the upper surface of the spacers **120** and thereby exposes the upper surface **120**S of the spacer **120** for further processing.

FIG. **2**J depicts the product **100** after a timed, recess etching process was performed on the layer of insulating material **132** such that it has a recessed upper surface **132**R. The amount or magnitude of the recessing of the layer of insulating material **132** may vary depending upon the particular application, e.g., 25-30 nm.

FIG. **2**K depicts the product **100** after several process operations were performed. First, the exposed portions of the liner layer **130** positioned above the recessed surface **132**R of the layer of insulating material **132** were oxidized. Thereafter, a second layer of insulating material **134**, e.g., an HDP oxide, was formed above the product **100**. Then, at least one chemical mechanical polishing (CMP) process was performed to planarize the upper surface of the second layer of insulating material **134** with the upper surface **109**S of the patterned hard mask layer (cap layer) **109**. At the conclusion of this process operation, the upper surface **120**S of the spacer **120** and the upper surface **109**S of the patterned hard mask layer (cap layer) **109** are exposed for further processing.

FIG. **2**L depicts the product **100** after a timed, recess etching process was performed to remove the entirety of the mask layer (cap layer) **109** and to remove portions of the spacer **120** so as to define recessed spacers **120**R. This process operation results in the exposure of an upper surface **108**S of the vertically oriented channel semiconductor structures **108**. This process operation also results in the definition of a spacer/contact cavity **131** above the upper surface

120S1 of the recessed spacer **120**R and the upper surface **108**S of the vertically oriented channel semiconductor structure **108** that is surrounded by the insulating material **134**.

FIG. **2**M depicts the product **100** after several process operations were performed. First, a low-k sidewall spacer **136** was formed within the spacer/contact cavity **131** above the recessed spacers **120**R while leaving at least a portion of upper surfaces **108**S of the vertically oriented channel semiconductor structures **108** exposed for further processing. In some applications, the low-k spacer **136** may be sized such that substantially the entire upper surfaces **108**S of the vertically oriented channel semiconductor structures **108** will be exposed for further processing. The low-k sidewall spacers **136** were formed by depositing a layer of spacer material (e.g., an insulating material having a dielectric constant of 5.5 or less, such as SiOCN, SIBCN, etc.) and thereafter performing an anisotropic etching process. In one illustrative embodiment, the low-k sidewall spacer **136** may have a lateral width at the base of the low-k sidewall spacer **136** that is approximately equal to a lateral width of the upper surface **120S1** of the recessed spacer **120**R.

FIG. **2**N depicts the product **100** after several process operations were performed. First, a top S/D region **140**N (comprises N-type dopant atoms) and a top S/D region **140**P (comprises P-type dopant atoms) were formed in the vertically oriented channel semiconductor structures **108** by performing one or more ion implantation processes through patterned implant masks (not shown) and through an opening defined by the low-k sidewall spacer **136**. Then, an optional region of epi semiconductor material **142** was formed on the exposed upper surface **108**S of the vertically oriented channel semiconductor structures **108** by performing an epitaxial growth process. Next, simplistically depicted self-aligned upper S/D conductive contacts **144**N, **144**P were formed in the spacer/contact cavities **131** for the devices **106**N, **106**P, respectively. The self-aligned upper S/D conductive contacts **144**N, **144**P are conductively coupled to the top S/D regions **140**N, **140**P, respectively. Note that the self-aligned upper S/D conductive contacts **144**N, **144**P are self-aligned in that their configuration is defined by the remaining unfilled portion of the spacer/contact cavities **131** at the time the upper S/D conductive contacts **144**N, **144**P are formed. Also note that, in one embodiment, the self-aligned upper S/D contacts **144**N, **144**P physically contact the low-k spacer **136** within its associated spacer/contact cavity **131**. The upper S/D contacts **144**N, **144**P were formed by depositing an appropriate contact metal, such as tungsten, so as to overfill the spacer/contact cavity **131** above the epi semiconductor materials **142** (in the depicted example) and thereafter performing a CMP process to remove excess materials positioned above the upper surface **134**S of the layer of insulating material **134**. Additionally, although not separately depicted, a metal silicide layer (not shown) may be formed on the epi semiconductor materials **142** prior to depositing the contact metal.

FIG. **2**O depicts the product **100** after simplistically depicted lower S/D contacts **146**N, **146**P were formed for the devices **106**N, **106**P, respectively. The lower S/D contacts **146**N, **146**P are conductively coupled to the bottom S/D regions **110**N, **110**P via the conductive metal layer **114** and the conductive liner layer **112**. The lower S/D contacts **146**N, **146**P are intended to be representative of any type of conductive structure that may be formed on a semiconductor device using any of a variety of different types of materials, and they may include one or more liner layers or barrier layers (not depicted). In general, the lower S/D contacts **146**N, **146**P may be formed by forming a contact opening in the various layers of material that exposes the conductive metal layer **114**, filling the contact opening with the appropriate materials and thereafter performing a CMP process to remove excess materials positioned above the upper surface of the layer of insulating material **134**. The separate contacts for the gate structures **124**N, **124**P may be formed at the same time as are the lower S/D contacts **146**N, **146**P. However, in this example, the contact structures are not depicted in the cross-sectional drawing shown in FIG. **2**O as the gate contacts will be formed at a location of the product that is not include in FIG. **2**O, e.g., behind the vertically oriented channel semiconductor structures **108**.

Of course, as will be appreciated by those skilled in the art after a complete reading of the present application, the novel methods and structures disclosed herein may be employed in advanced device technologies such as those requiring the use of self-aligned contacts. FIG. **2**P depicts an illustrative example of an integrated circuit produce **100** wherein two transistors of the same type, P-type transistors in the depicted example, are formed side-by-side in the substrate **102** and an illustrative and simplistically depicted self-aligned contact **149** is formed to establish electrical contact to the shared bottom S/D regions **110**P of the devices. Of course, the methods disclosed herein may be employed when devices of opposite types are configured so as to have a shared bottom S/D region. In the depicted example, with a masking layer in position that exposes a portion of the region **151** in between the two gate structures **124**P, an etching process is performed to remove the silicon dioxide materials **134** and **132** relative to the spacers **136**, the recessed spacers **120**R and the liner layer **130**. The removal of the silicon dioxide materials stops on the liner layer **130**. At that point, the etch chemistry may be changed to punch through the liner layer **130** and etch through the bottom spacer layer **116** so as to expose a portion of the conductive metal layer **114**. At that point, after the conductive metal layer is exposed, the materials for the self-aligned contact **149**, including any barrier layers or liner layers (not separately shown), are formed in the opening for the self-aligned contact **149**. The simplistically depicted self-aligned contact **149** is intended to be representative of any type of self-aligned contact structure that may be formed on a semiconductor device and it may be formed using any of a variety of different types of materials. In general, the self-aligned contact **149** may be formed by forming the above-described contact opening in the various layers of material that exposes the conductive metal layer **114**, filling the contact opening with the appropriate materials and thereafter performing a CMP process to remove excess materials positioned above the upper surface of the layer of insulating material **134**.

The particular embodiments disclosed above are illustrative only, as the invention may be modified and practiced in different but equivalent manners apparent to those skilled in the art having the benefit of the teachings herein. For example, the process steps set forth above may be performed in a different order. Furthermore, no limitations are intended to the details of construction or design herein shown, other than as described in the claims below. It is therefore evident that the particular embodiments disclosed above may be altered or modified and all such variations are considered within the scope and spirit of the invention. Note that the use of terms, such as "first," "second," "third" or "fourth" to describe various processes or structures in this specification and in the attached claims is only used as a shorthand reference to such steps/structures and does not necessarily

imply that such steps/structures are performed/formed in that ordered sequence. Of course, depending upon the exact claim language, an ordered sequence of such processes may or may not be required. Accordingly, the protection sought herein is as set forth in the claims below.

What is claimed:

1. A method of forming a vertical transistor device, the method comprising:

forming a vertically oriented channel semiconductor structure with a cap layer positioned above said vertically oriented channel semiconductor structure;

forming a first sidewall spacer adjacent said vertically oriented channel semiconductor structure and adjacent said cap layer;

forming a layer of insulating material adjacent said first sidewall spacer;

performing at least one planarization process so as to planarize an upper surface of said layer of insulating material and expose an upper surface of said cap layer and an upper surface of said first sidewall spacer;

performing at least one etching process to remove a portion of said first sidewall spacer and to remove an entirety of said cap layer so as to thereby expose an upper surface of said vertically oriented channel semiconductor structure and define a spacer/contact cavity above said vertically oriented channel semiconductor structure and said first sidewall spacer;

forming a second spacer in said spacer/contact cavity, wherein after formation of said second spacer, at least a portion of said upper surface of said vertically oriented channel semiconductor structure remains exposed;

after forming said second spacer, forming a top source/drain region in said vertically oriented channel semiconductor structure; and

forming a top source/drain contact within said spacer/contact cavity that is conductively coupled to said top source/drain region, wherein said conductive contact physically contacts said second spacer in said spacer/contact cavity.

2. The method of claim **1**, wherein said first sidewall spacer is formed on and in contact with a sidewall of said vertically oriented channel semiconductor structure and on and in contact with a sidewall of said cap layer.

3. The method of claim **1**, wherein said second sidewall spacer comprises a low-k insulating material.

4. The method of claim **3**, wherein the cap layer comprises silicon nitride and the first sidewall spacer comprises SiOCN.

5. The method of claim **1**, wherein, after forming said top source/drain region and prior to forming said top source/drain contact, the method comprises forming an epi semiconductor material on said exposed upper surface of said vertically oriented channel semiconductor structure.

6. The method of claim **1**, wherein forming said second spacer in said spacer/contact cavity comprises depositing a layer of material for said second spacer in said spacer/contact cavity and performing an anisotropic etching process on said layer of material for said second spacer.

7. The method of claim **1**, wherein forming said second spacer in said spacer/contact cavity comprises forming said second spacer in said spacer/contact cavity such that, after the formation of said second spacer, the entire upper surface of said vertically oriented channel semiconductor structure remains exposed.

8. The method of claim **1**, wherein forming said top source/drain region comprises performing an ion implantation process through an opening defined by said second spacer.

9. The method of claim **1**, wherein:

prior to forming said first sidewall spacer, the method comprises:

forming a layer of a bottom spacer material around said vertically oriented channel semiconductor structure; and

forming a sacrificial material layer on and in contact with an upper surface of said layer of said bottom spacer material, said sacrificial material layer having an upper surface, wherein said first sidewall spacer is formed such that a bottom surface of said first sidewall spacer contacts said upper surface of said sacrificial material layer; and

after forming said first sidewall spacer and prior to forming said layer of insulating material adjacent said first sidewall spacer, the method further comprises:

removing said sacrificial material layer so as to define a replacement gate cavity between a bottom surface of said first sidewall spacer and said layer of said bottom spacer material; and

forming a replacement gate structure in said replacement gate cavity.

10. The method of claim **9**, wherein an outer surface of said replacement gate structure is substantially vertically aligned with an outer side surface of said first sidewall spacer.

11. A method of forming a vertical transistor device, the method comprising:

forming a vertically oriented channel semiconductor structure with a cap layer positioned above said vertically oriented channel semiconductor structure;

forming a first sidewall spacer on and in contact with a sidewall of said vertically oriented channel semiconductor structure and on and in contact with a sidewall of said cap layer;

forming a layer of insulating material adjacent said first sidewall spacer;

performing at least one planarization process so as to planarize an upper surface of said layer of insulating material and expose an upper surface of said cap layer and an upper surface of said first sidewall spacer;

performing at least one etching process to remove a portion of said first sidewall spacer and to remove an entirety of said cap layer so as to thereby expose an upper surface of said vertically oriented channel semiconductor structure and define a spacer/contact cavity above said vertically oriented channel semiconductor structure and said first sidewall spacer;

forming a second spacer comprised of a low-k material in said spacer/contact cavity, wherein after formation of said second spacer, substantially the entire upper surface of said vertically oriented channel semiconductor structure remains exposed;

after forming said second spacer, forming a top source/drain region in said vertically oriented channel semiconductor structure by performing an ion implantation process through an opening defined by said second spacer; and

forming a top source/drain contact within said spacer/contact cavity that is conductively coupled to said top source/drain region, wherein said conductive contact physically contacts said second spacer in said spacer/contact cavity.

12. The method of claim 11, wherein said cap layer comprises silicon nitride and said first sidewall spacer comprises SiOCN.

13. The method of claim 11 wherein, after forming said top source/drain region and prior to forming said top source/drain contact, the method comprises forming an epi semiconductor material on said exposed upper surface of said vertically oriented channel semiconductor structure.

14. The method of claim 11, wherein forming said second spacer in said spacer/contact cavity comprises depositing a layer of material for said second spacer in said spacer/contact cavity and performing an anisotropic etching process on said layer of material for said second spacer.

15. The method of claim 11 wherein:

prior to forming said first sidewall spacer, the method comprises:

forming a layer of a bottom spacer material around said vertically oriented channel semiconductor structure; and

forming a sacrificial material layer on and in contact with an upper surface of said layer of said bottom spacer material, said sacrificial material layer having an upper surface, wherein said first sidewall spacer is formed such that a bottom surface of said first sidewall spacer contacts said upper surface of said sacrificial material layer; and

after forming said first sidewall spacer and prior to forming said layer of insulating material adjacent said first sidewall spacer, the method further comprises:

removing said sacrificial material layer so as to define a replacement gate cavity between a bottom surface of said first sidewall spacer and said layer of said bottom spacer material; and

forming a replacement gate structure in said replacement gate cavity.

16. The method of claim 15, wherein an outer surface of said replacement gate structure is substantially vertically aligned with an outer side surface of said first sidewall spacer.

* * * * *