US006839702B1

(12) **United States Patent**
Patel et al.

(10) **Patent No.: US 6,839,702 B1**
(45) **Date of Patent: Jan. 4, 2005**

(54) **SYSTEMS AND METHODS FOR HIGHLIGHTING SEARCH RESULTS**

(75) Inventors: **Amit J. Patel**, Cupertino, CA (US); **David L. desJardins**, Mountain View, CA (US)

(73) Assignee: **Google Inc.**, Mountain View, CA (US)

(*) Notice: Subject to any disclaimer, the term of this patent is extended or adjusted under 35 U.S.C. 154(b) by 327 days.

(21) Appl. No.: **09/734,882**

(22) Filed: **Dec. 13, 2000**

Related U.S. Application Data

(60) Provisional application No. 60/171,019, filed on Dec. 15, 1999.

(51) **Int. Cl.**[7] **G06F 17/30**
(52) **U.S. Cl.** **707/3**; 707/10
(58) **Field of Search** 707/3–6, 10, 101, 707/104.1, 513; 345/835, 716, 650, 738

(56) **References Cited**

U.S. PATENT DOCUMENTS

5,946,678 A * 8/1999 Aalbersberg 345/835
6,112,202 A * 8/2000 Kleinberg 707/101
6,397,218 B1 * 5/2002 Stern et al. 707/10
6,510,406 B1 * 1/2003 Marchisio 707/3

OTHER PUBLICATIONS

Michelle Q. Wang Baldonado, Terry Winograd "Hi–cites: dynamically created citations with active highlighting"Proceedings of the SIGCHI conference on Human factors in computing systems Jan. 1998 p. 408–415.*

Ali Hussam, Brian Ford, Jack Hyde , Ali Merayyan , Bill Plummer , Terry Anderson "Semantic highlighting" CHI 98 conference summary on Human factors in computing systems Apr. 1998.*

* cited by examiner

Primary Examiner—Diane D. Mizrahi
(74) *Attorney, Agent, or Firm*—Harrity & Snyder, LLP

(57) **ABSTRACT**

A system highlights search terms in documents distributed over a network. The system generates a search query that includes a search term and, in response to the search query, receives a list of one or more references to documents in the network. The system receives selection of one of the references and retrieves a document that corresponds to the selected reference. The system then highlights the search term in the retrieved document.

11 Claims, 10 Drawing Sheets

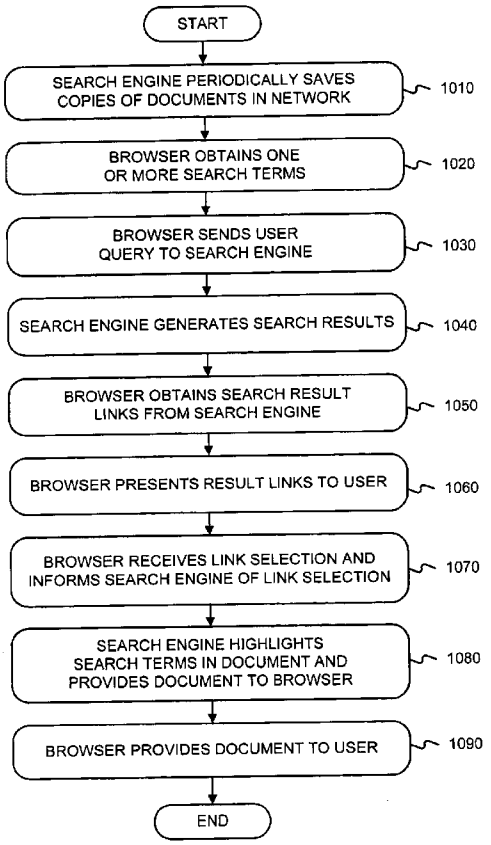

MICROSOFT EXHIBIT 1033

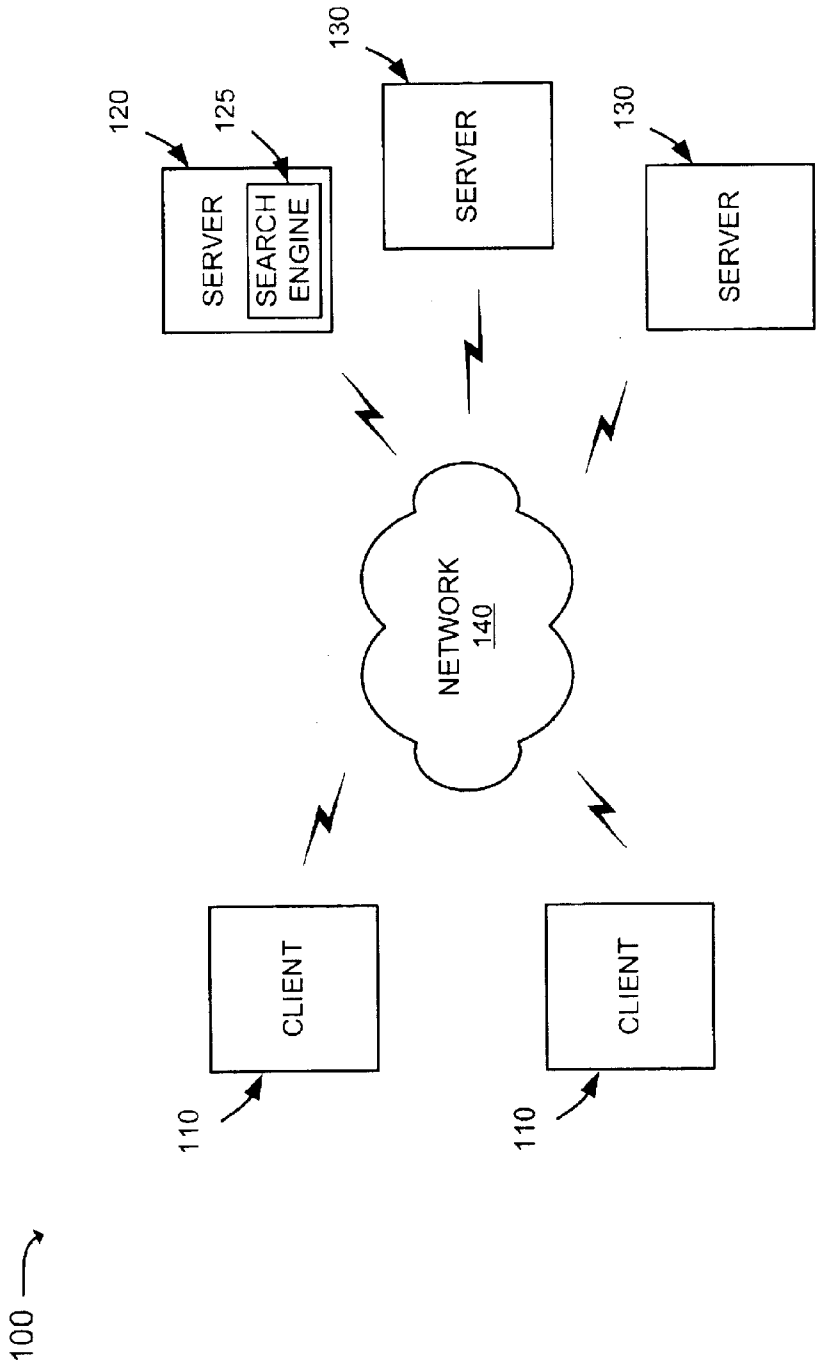
100
110
CLIENT
110
CLIENT
NETWORK
140
120
SERVER
125
SEARCH
ENGINE
130
SERVER
130
SERVER

FIG. 1

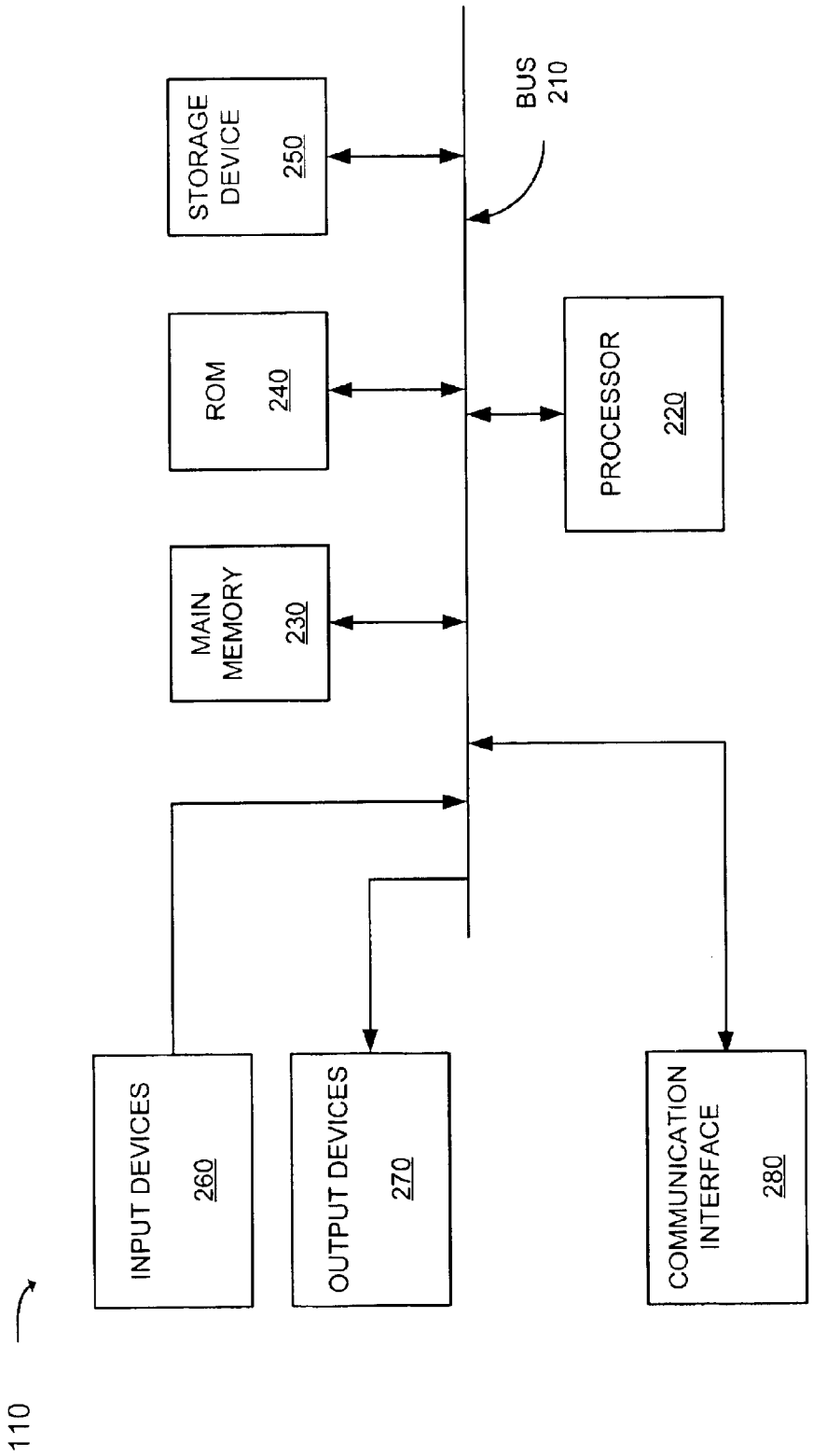
110
INPUT DEVICES
260
OUTPUT DEVICES
270
COMMUNICATION INTERFACE
280
MAIN MEMORY
230
ROM
240
STORAGE DEVICE
250
PROCESSOR
220
BUS
210

FIG. 2

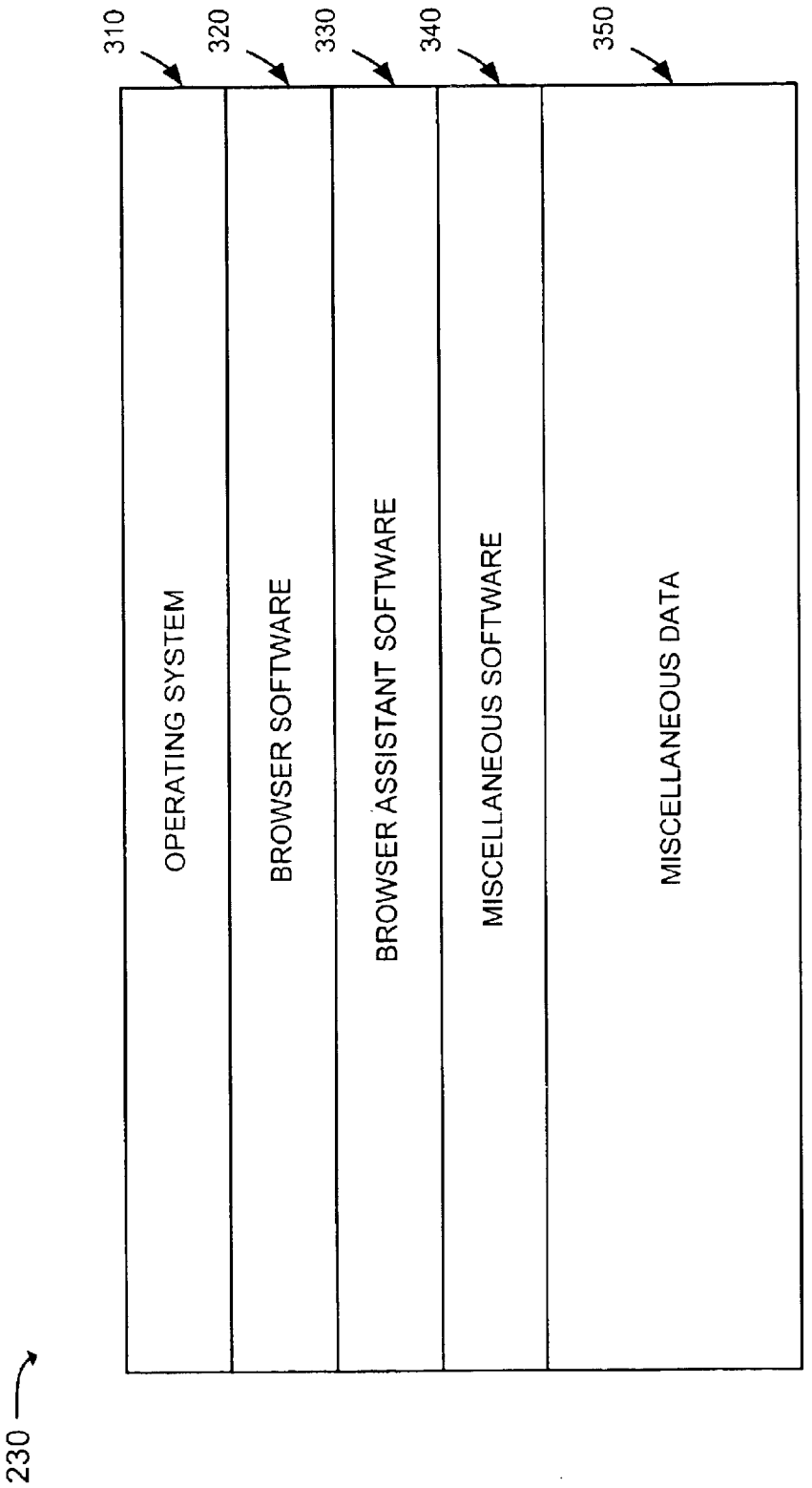
310
OPERATING SYSTEM
320
BROWSER SOFTWARE
330
BROWSER ASSISTANT SOFTWARE
340
MISCELLANEOUS SOFTWARE
350
MISCELLANEOUS DATA
230

FIG. 3

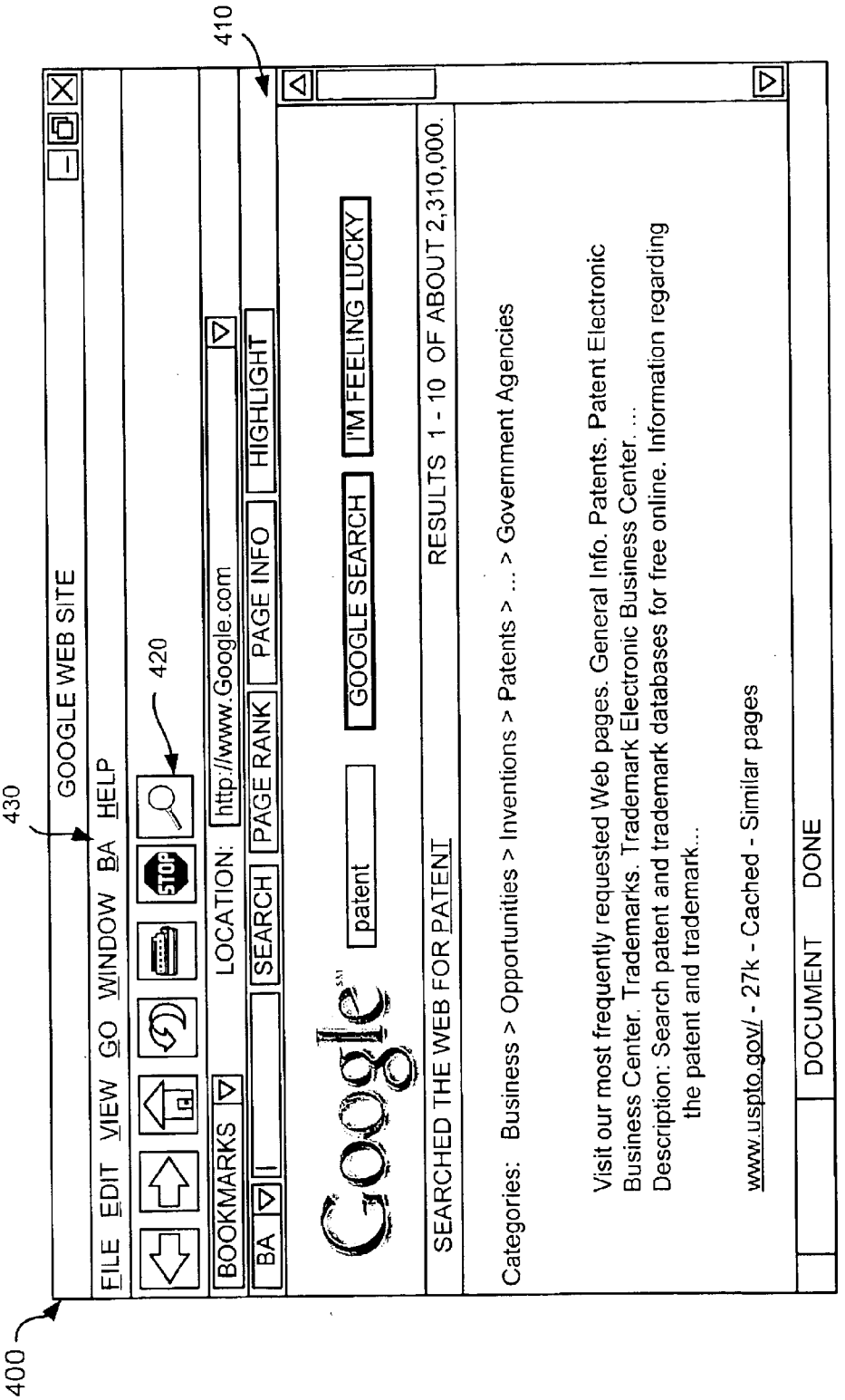
400
430
410
420
GOOGLE WEB SITE
FILE EDIT VIEW GO WINDOW BA HELP
STOP
BOOKMARKS
LOCATION: http://www.Google.com
BA
SEARCH
PAGE RANK
PAGE INFO
HIGHLIGHT
Google
patent
GOOGLE SEARCH
I'M FEELING LUCKY
SEARCHED THE WEB FOR PATENT
RESULTS 1 - 10 OF ABOUT 2,310,000.
Categories: Business > Opportunities > Inventions > Patents > ... > Government Agencies
Visit our most frequently requested Web pages. General Info. Patents. Patent Electronic Business Center. Trademarks. Trademark Electronic Business Center. ...
Description: Search patent and trademark databases for free online. Information regarding the patent and trademark...
www.uspto.gov/ - 27k - Cached - Similar pages
DOCUMENT DONE

FIG. 4

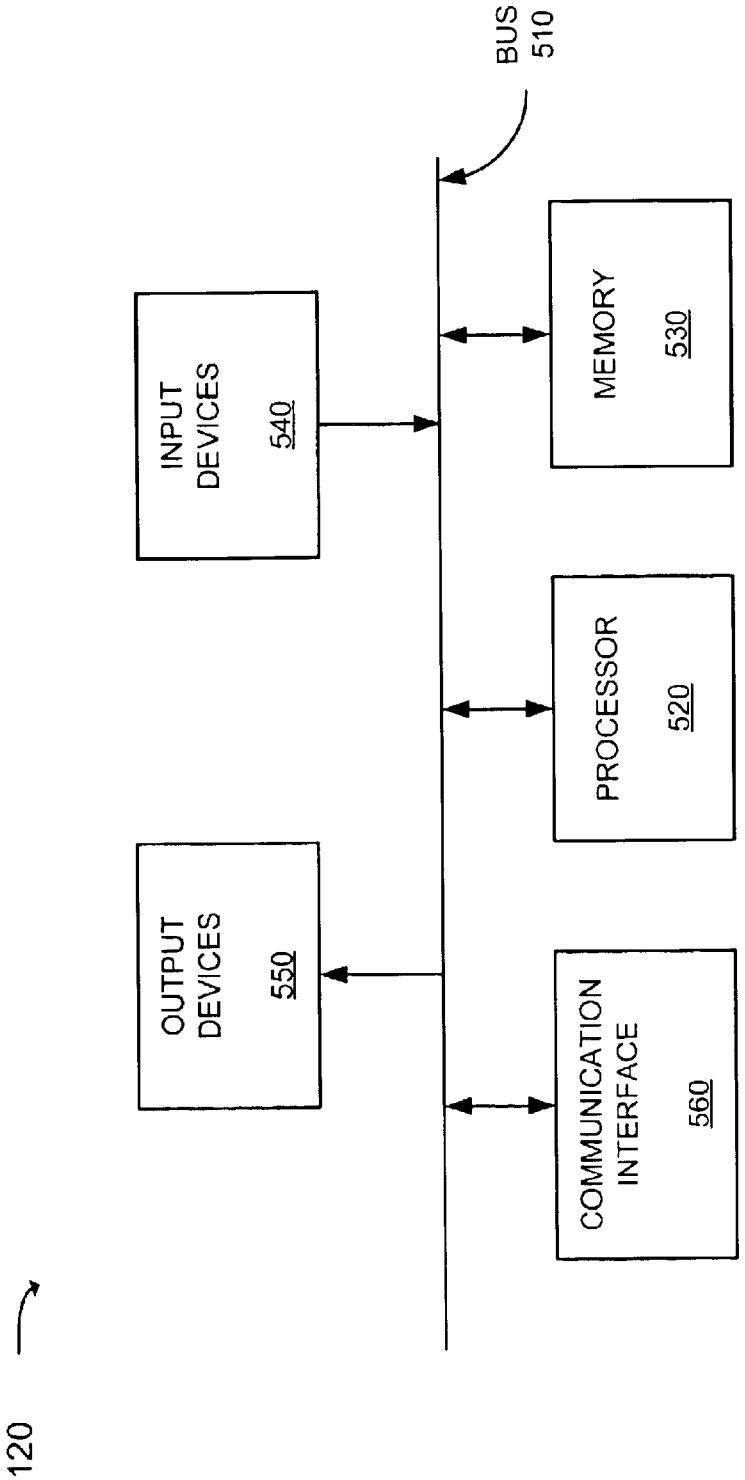
120
OUTPUT DEVICES 550
INPUT DEVICES 540
COMMUNICATION INTERFACE 560
PROCESSOR 520
MEMORY 530
BUS 510

FIG. 5

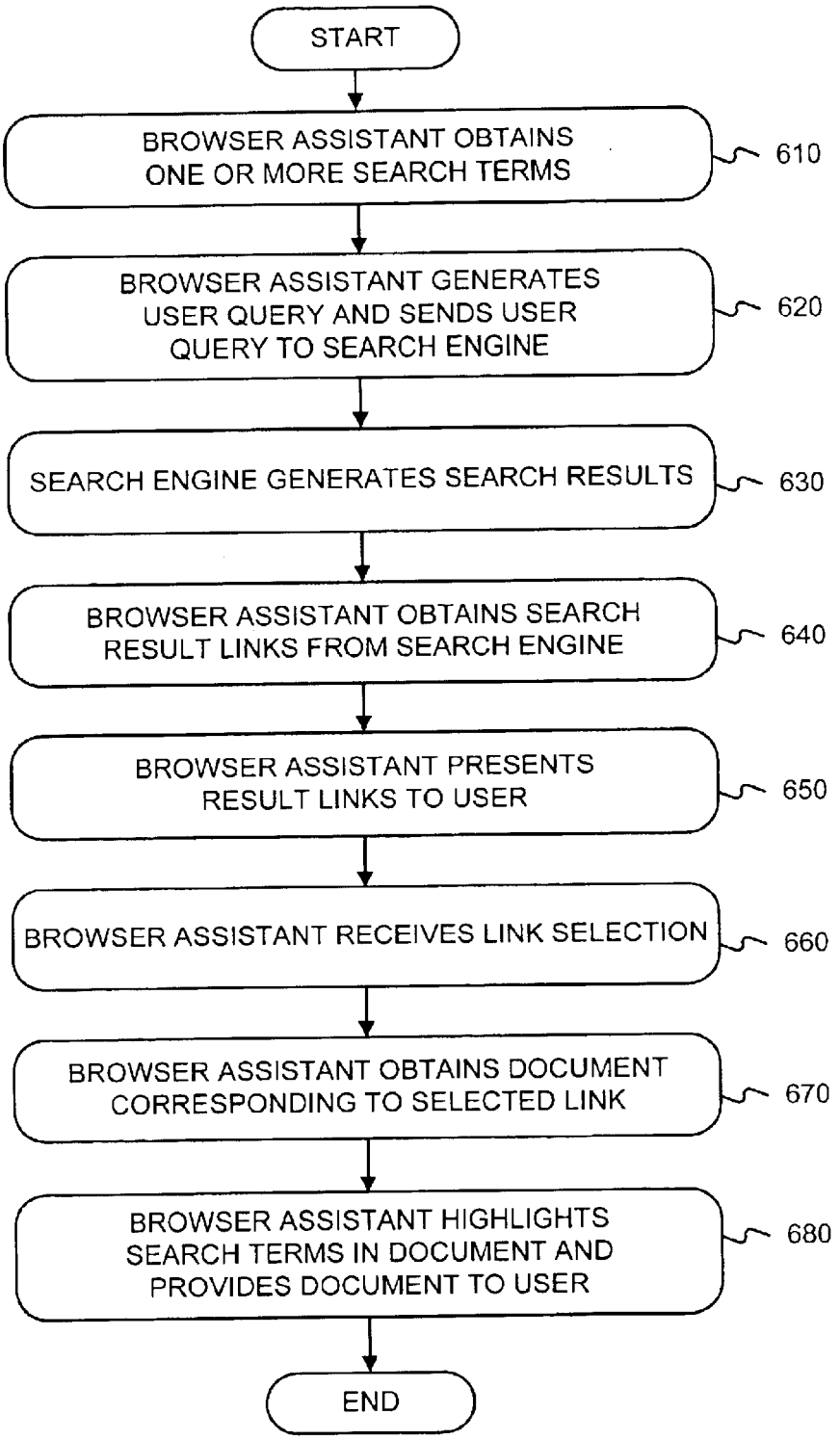
START
BROWSER ASSISTANT OBTAINS ONE OR MORE SEARCH TERMS
610
BROWSER ASSISTANT GENERATES USER QUERY AND SENDS USER QUERY TO SEARCH ENGINE
620
SEARCH ENGINE GENERATES SEARCH RESULTS
630
BROWSER ASSISTANT OBTAINS SEARCH RESULT LINKS FROM SEARCH ENGINE
640
BROWSER ASSISTANT PRESENTS RESULT LINKS TO USER
650
BROWSER ASSISTANT RECEIVES LINK SELECTION
660
BROWSER ASSISTANT OBTAINS DOCUMENT CORRESPONDING TO SELECTED LINK
670
BROWSER ASSISTANT HIGHLIGHTS SEARCH TERMS IN DOCUMENT AND PROVIDES DOCUMENT TO USER
680
END

FIG. 6

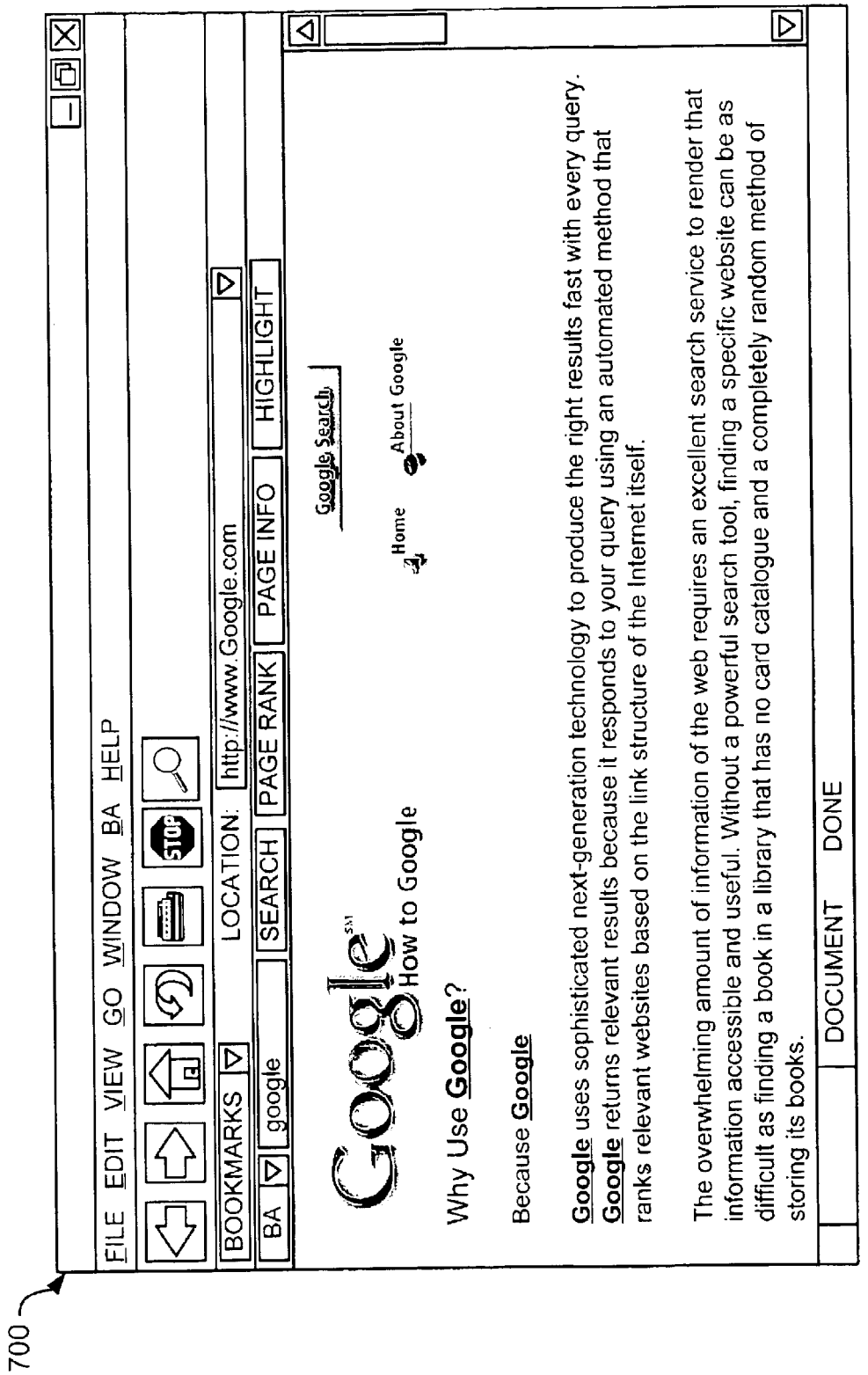
700
FILE EDIT VIEW GO WINDOW BA HELP
STOP
BOOKMARKS
LOCATION: http://www.Google.com
BA
google
SEARCH
PAGE RANK
PAGE INFO
HIGHLIGHT
Google
How to Google
Google Search
Home
About Google
Why Use Google?
Because Google
Google uses sophisticated next-generation technology to produce the right results fast with every query. Google returns relevant results because it responds to your query using an automated method that ranks relevant websites based on the link structure of the Internet itself.
The overwhelming amount of information of the web requires an excellent search service to render that information accessible and useful. Without a powerful search tool, finding a specific website can be as difficult as finding a book in a library that has no card catalogue and a completely random method of storing its books.
DOCUMENT DONE

FIG. 7

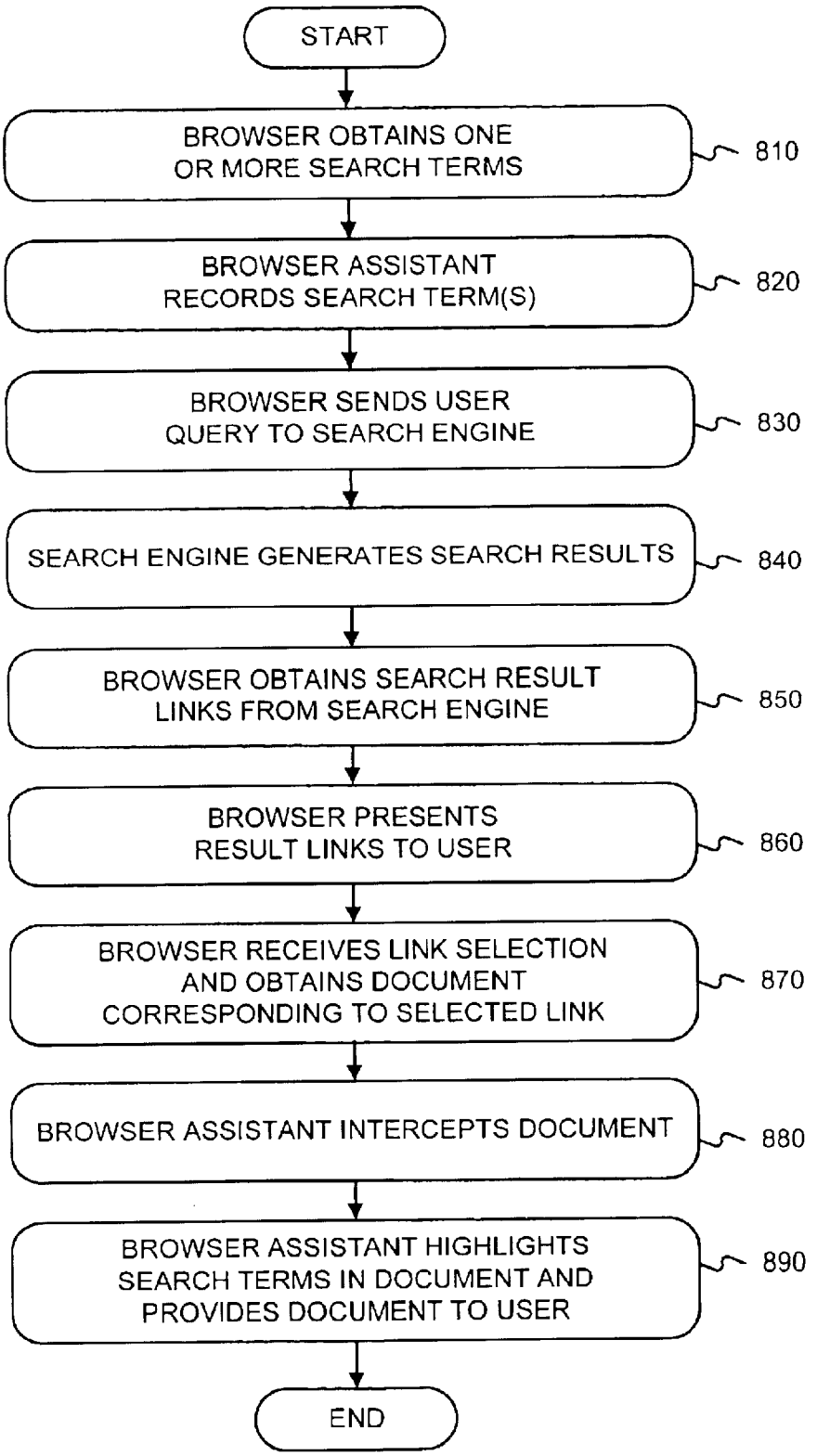
START
BROWSER OBTAINS ONE OR MORE SEARCH TERMS
810
BROWSER ASSISTANT RECORDS SEARCH TERM(S)
820
BROWSER SENDS USER QUERY TO SEARCH ENGINE
830
SEARCH ENGINE GENERATES SEARCH RESULTS
840
BROWSER OBTAINS SEARCH RESULT LINKS FROM SEARCH ENGINE
850
BROWSER PRESENTS RESULT LINKS TO USER
860
BROWSER RECEIVES LINK SELECTION AND OBTAINS DOCUMENT CORRESPONDING TO SELECTED LINK
870
BROWSER ASSISTANT INTERCEPTS DOCUMENT
880
BROWSER ASSISTANT HIGHLIGHTS SEARCH TERMS IN DOCUMENT AND PROVIDES DOCUMENT TO USER
890
END

FIG. 8

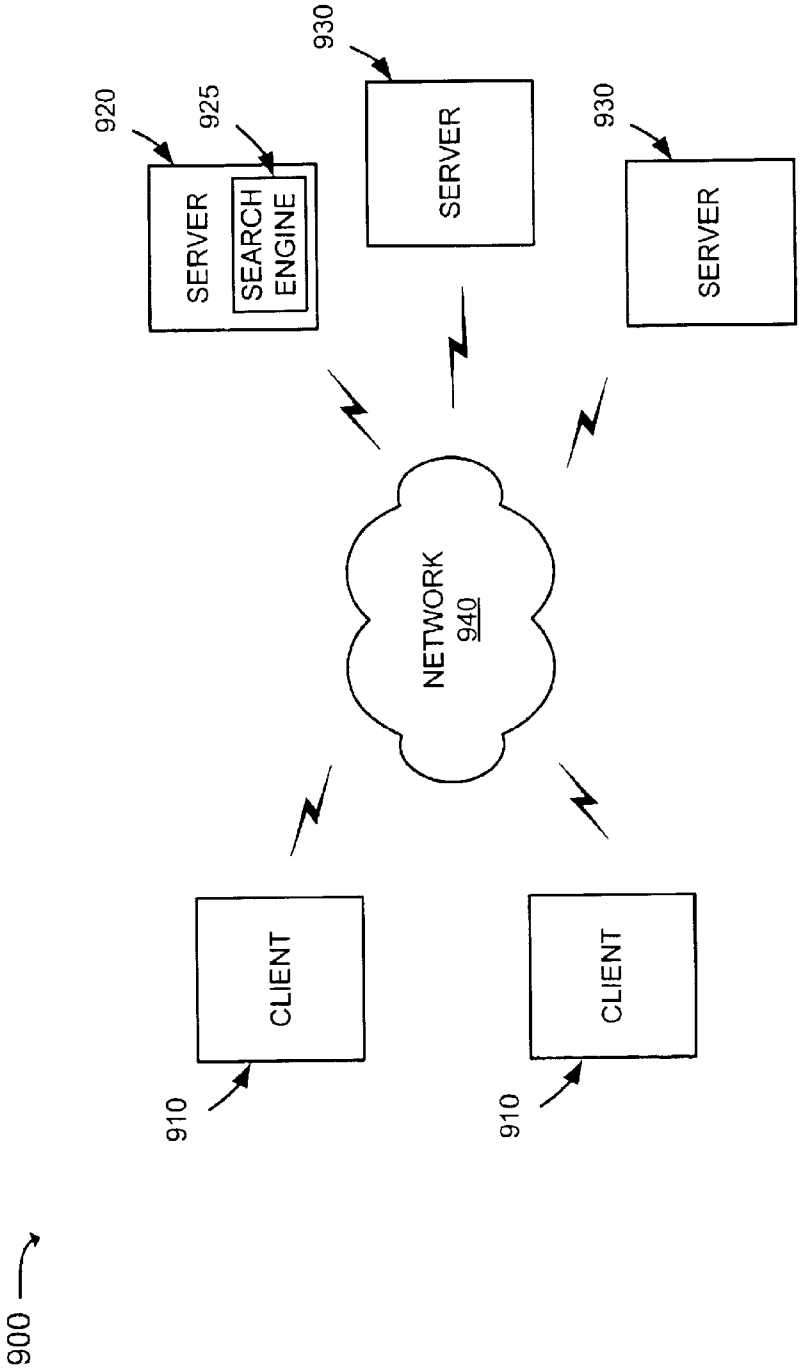
900
910
CLIENT
910
CLIENT
NETWORK
940
920
SERVER
925
SEARCH ENGINE
930
SERVER
930
SERVER

FIG. 9

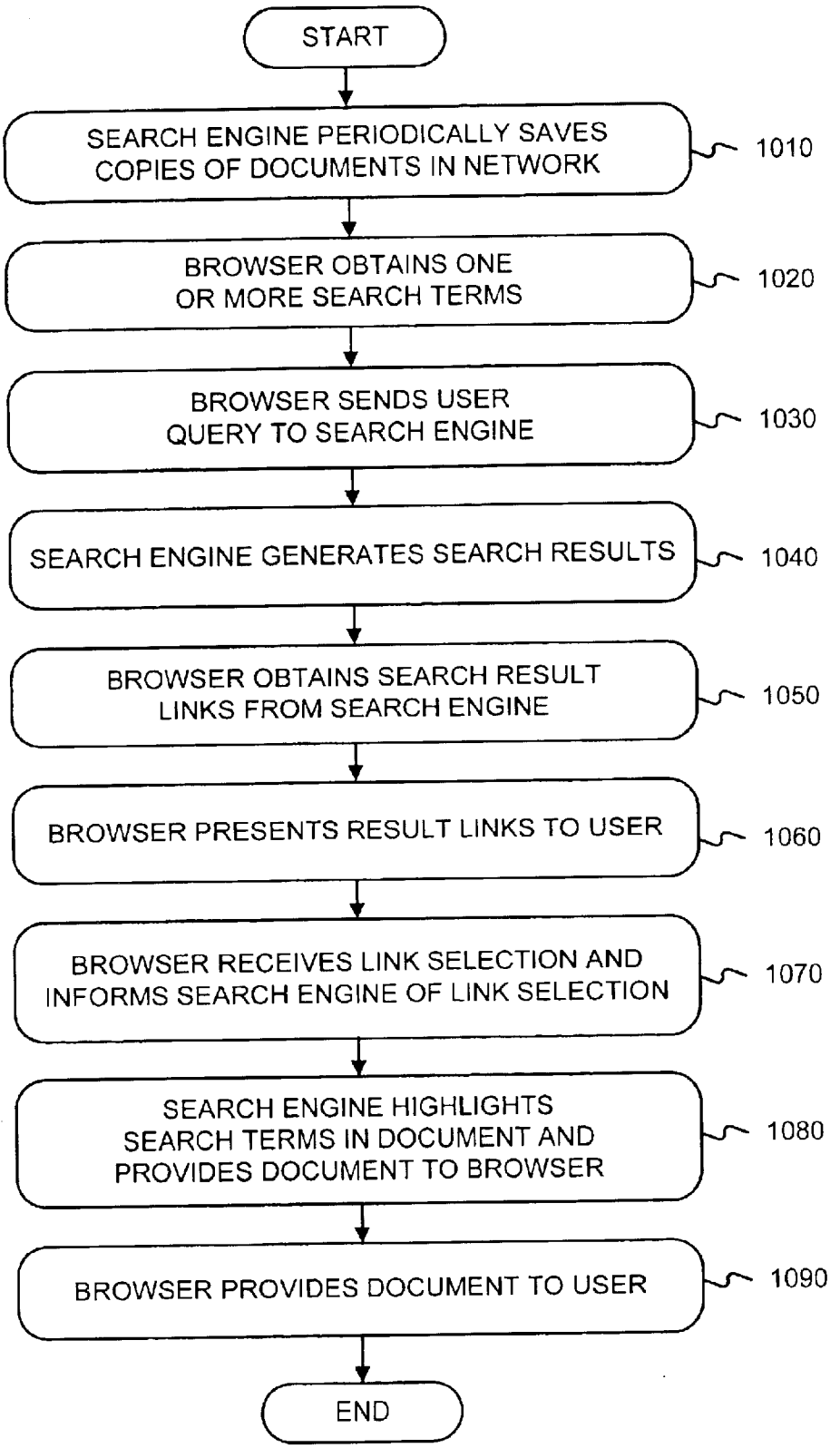
START
SEARCH ENGINE PERIODICALLY SAVES COPIES OF DOCUMENTS IN NETWORK
1010
BROWSER OBTAINS ONE OR MORE SEARCH TERMS
1020
BROWSER SENDS USER QUERY TO SEARCH ENGINE
1030
SEARCH ENGINE GENERATES SEARCH RESULTS
1040
BROWSER OBTAINS SEARCH RESULT LINKS FROM SEARCH ENGINE
1050
BROWSER PRESENTS RESULT LINKS TO USER
1060
BROWSER RECEIVES LINK SELECTION AND INFORMS SEARCH ENGINE OF LINK SELECTION
1070
SEARCH ENGINE HIGHLIGHTS SEARCH TERMS IN DOCUMENT AND PROVIDES DOCUMENT TO BROWSER
1080
BROWSER PROVIDES DOCUMENT TO USER
1090
END

FIG. 10

SYSTEMS AND METHODS FOR HIGHLIGHTING SEARCH RESULTS

RELATED APPLICATION

This application claims priority under 35 U.S.C. § 119(e) based on U.S. Provisional Application Ser. No. 60/171,019, filed Dec. 15, 1999, the disclosure of which is incorporated herein by reference.

BACKGROUND OF THE INVENTION

A. Field of the Invention

The present invention relates generally to information retrieval systems and, more particularly, to systems and methods for highlighting query terms in search results.

B. Description of Related Art

Conventional techniques for searching a hypertext medium, such as the World Wide Web ("web"), are replete with deficiencies. To perform a search on the web, a user typically uses a web browser, such as the Netscape Navigator and Microsoft Internet Explorer browsers. The user enters one or more search terms into the browser. In response, the browser generates a query request to a search engine. The search engine typically returns a list of result links to the browser, which, in turn, displays the list to the user.

To view a document associated with one of the links, the user typically selects the link by, for example, clicking on it using a mouse. Sometimes, the user desires to determine where the search terms are located in the document to determine the document's relevance. Conventional information retrieval systems require that the user perform a word search on the document to locate each occurrence of the search terms.

As a result, there exists a need for mechanisms for highlighting search terms in a retrieved document to aid a user in determining the document's relevance.

SUMMARY OF THE INVENTION

Systems and methods, consistent with the present invention, address this and other needs by providing mechanisms for highlighting search terms in retrieved documents to facilitate the determination of the documents' relevance.

In accordance with the purpose of the invention as embodied and broadly described herein, a system highlights search terms in documents distributed over a network. The system generates a search query that includes a search term and, in response to the search query, receives a list of one or more references to documents in the network. The system receives selection of one of the references and retrieves a document that corresponds to the selected reference. The system then highlights the search term in the retrieved document.

In another implementation consistent with the present invention, a web browser includes instructions for obtaining a search term; instructions for generating a search query from the search term; and instructions for obtaining a list of one or more references to documents distributed over a network using the search query. The web browser further includes instructions for retrieving a document corresponding to one of the one or more references; instructions for highlighting each occurrence of the search term in the retrieved document; and instructions for displaying the highlighted document to a user.

BRIEF DESCRIPTION OF THE DRAWINGS

The accompanying drawings, which are incorporated in and constitute a part of this specification, illustrate an

embodiment of the invention and, together with the description, explain the invention. In the drawings,

FIG. **1** is a diagram of an exemplary network in which systems and methods consistent with the present invention may be implemented;

FIG. **2** is an exemplary diagram of a client of FIG. **1** in an implementation consistent with the present invention;

FIG. **3** is a diagram of an exemplary computer-readable medium used by the clients of FIG. **1** according to an implementation consistent with the present invention;

FIG. **4** is an exemplary diagram of a graphical user interface that includes the browser assistant of FIG. **3** according to an implementation consistent with the present invention;

FIG. **5** is an exemplary diagram of a server of FIG. **1** according to an implementation consistent with the present invention;

FIG. **6** is a flowchart of exemplary processing for highlighting search results in accordance with an implementation consistent with the present invention;

FIG. **7** is a diagram of an exemplary graphical user interface that displays a document with highlighted search terms according to an implementation consistent with the present invention;

FIG. **8** is a flowchart of exemplary processing for highlighting search results in accordance with an alternate implementation consistent with the present invention;

FIG. **9** is an exemplary diagram of an alternate network in which systems and methods consistent with the present invention may be implemented; and

FIG. **10** is a flowchart of exemplary processing for highlighting search results in accordance with another implementation consistent with the present invention.

DETAILED DESCRIPTION

The following detailed description of the invention refers to the accompanying drawings. The same reference numbers in different drawings identify the same or similar elements. Also, the following detailed description does not limit the invention. Instead, the scope of the invention is defined by the appended claims and equivalents.

Systems and methods, consistent with the present invention, highlight search terms in documents retrieved as a result of a search to aid in the determination of the relevancy of the retrieved documents.

Exemplary Network with Browser Assistant

FIG. **1** is an exemplary diagram of a network **100** in which systems and methods consistent with the present invention may be implemented. The network **100** may include multiple clients **110** connected to multiple servers **120–130** via a network **140**. The network **140** may include a local area network (LAN), a wide area network (WAN), a telephone network, such as the Public Switched Telephone Network (PSTN), an intranet, the Internet, a similar or dissimilar network, or a combination of networks. Two clients **110** and three servers **120–130** have been illustrated as connected to network **140** for simplicity. In practice, there may be more Or less clients and servers. Also, in some instances, a client may perform the functions of a server and a server may perform the functions of a client.

The clients **110** may include devices, such as wireless telephones, personal computers, personal digital assistants (PDAs), lap tops, etc., threads or processes running on these

devices, and/or objects executable by these devices. The servers **120–130** may include server devices, threads, and/or objects that operate upon, search, or maintain documents in a manner consistent with the present invention. The clients **110** and servers **120–130** may connect to the network **140** via wired, wireless, or optical connections.

In an implementation consistent with the present invention, the server **120** may include a search engine **125** usable by the clients **110**. The servers **130** may store documents accessible by the clients **110**.

Exemplary Client Architecture

FIG. **2** is an exemplary diagram of a client **110** in an implementation consistent with the present invention. The client **110** may include a bus **210**, a processor **220**, a main memory **230**, a read only memory (ROM) **240**, a storage device **250**, one or more input devices **260**, one or more output devices **270**, and a communication interface **280**. The bus **210** may include one or more conductors that permit communication among the components of the client **110**.

The processor **220** may include any type of conventional processor or microprocessor that interprets and executes instructions. The main memory **230** may include a random access memory (RAM) or another type of dynamic storage device that stores information and instructions for execution by the processor **220**. The ROM **240** may include a conventional ROM device or another type of static storage device that stores static information and instructions for use by the processor **220**. The storage device **250** may include a magnetic and/or optical recording medium and its corresponding drive.

The input devices **260** may include one or more conventional mechanisms that permit a user to input information to the client **110**, such as a keyboard, a mouse, a pen, voice recognition and/or biometric mechanisms, etc. The output devices **270** may include one or more conventional mechanisms that output information to the user, including a display, a printer, a speaker, etc. The communication interface **280** may include any transceiver-like mechanism that enables the client **110** to communicate with other devices and/or systems. For example, the communication interface **280** may include mechanisms for communicating with another device or system via a network, such as network **140**.

As will be described in detail below, the clients **110**, consistent with the present invention, perform certain searching-related operations. The clients **110** may perform these operations in response to processor **220** executing software instructions contained in a computer-readable medium, such as memory **230**. A computer-readable medium may be defined as one or more memory devices and/or carrier waves.

The software instructions may be read into memory **230** from another computer-readable medium, such as the data storage device **250**, or from another device via the communication interface **280**. The software instructions contained in memory **230** causes processor **220** to perform processes that will be described later. Alternatively, hardwired circuitry may be used in place of or in combination with software instructions to implement processes consistent with the present invention. Thus, the present invention is not limited to any specific combination of hardware circuitry and software.

Exemplary Computer-Readable Medium

FIG. **3** is a diagram of an exemplary computer-readable medium used by the clients **110** according to an implementation consistent with the present invention. In this implementation, the computer-readable medium includes memory **230**. The memory **230** may include an operating system **310**, browser software **320**, browser assistant software **330**, miscellaneous other software **340**, and miscellaneous data **350**.

The operating system **310** may include conventional operating system software, such as the Windows, Unix, or Linux operating systems. The browser software **320** may include conventional web browser software, such as the Microsoft Internet Explorer or Netscape Navigator browsers.

The browser assistant software **330** may include a plug-in, an applet, a dynamic link library (DLL), or a similar executable object or process. The client **10** may obtain the plug-in from the server **120** or from a third party server, disk, tape, network, CD-ROM, etc. Alternatively, the plug-in may be pre-installed on the client **110**.

In another implementation consistent with the present invention, the browser assistant **330** is part of the browser **320**. In this implementation, the browser **320** performs the functions of the browser assistant **330**. In yet another implementation, the browser assistant **330** is a process separate from and runs concurrently with the browser **320**. In this implementation, the browser assistant **330** may interface between the browser **320** and the network **140**.

The browser assistant **330** may be automatically activated upon initiation of the browser **320**. Alternatively, the browser assistant **330** may be activated when instructed by a user. In either case, the browser assistant **330** may take the form of a graphical user interface, such as a tool bar, software button, or menu, that provides an extension to the browser **320**.

FIG. **4** is an exemplary diagram of a graphical user interface **400** that includes a browser assistant (BA) **330** according to an implementation consistent with the present invention. The graphical user interface **400** illustrated in FIG. **4** shows three forms of the browser assistant **330**: a tool bar **410**, a software button **420**, and a menu **430**. The browser assistant **330** may take other forms.

The tool bar **410** includes software buttons and/or menus selectable by a user to initiate different functions of the browser assistant **330**. In this case, a user may activate a function of the browser assistant **330** by selecting one of the software buttons and/or menus. The software button **420** may be selectable by a user to initiate the browser assistant **330** functionality. In this case, a user may activate a function of the browser assistant **330** by selecting the button using, for example, a mouse. The menu **430** may provide a list of functions that the browser assistant **330** is capable of performing. A user may select from the list to activate the browser assistant **330** and instruct the browser assistant **330** to perform the desired function.

As described in more detail below, the browser assistant **330** may perform many searching-related functions to enhance a user's search experience. The browser assistant **330** may attach to the browser **320** to provide additional functionality to the user.

Returning to FIG. **3**, the miscellaneous other software **340** and miscellaneous data **350** may include programs and data used by the client **110** to perform searching-related and non-searching-related operations.

Exemplary Server Architecture

FIG. **5** is an exemplary diagram of the server **120** according to an implementation consistent with the present invention. The servers **130** may be similarly configured.

The server **120** may include a bus **510**, a processor **520**, a memory **530**, one or more input devices **540**, one or more output devices **550**, and a communication interface **560**. The bus **510** permits communication among the components of the server **120**. The processor **520** may include any type of conventional processor or microprocessor that interprets and executes instructions. The memory **530** may include a RAM or another type of dynamic storage device that stores information and instructions for execution by the processor **520**; a ROM or another type of static storage device that stores static information and instructions for use by the processor **520**; and/or some other type of magnetic or optical recording medium and its corresponding drive.

The input devices **540** may include one or more conventional mechanisms that permit an operator to input information into the server **120**, such as a keyboard, mouse, pen, etc. The output devices **550** may include one or more conventional mechanisms that output information to the operator, including a display, a printer, a speaker, etc. The communication interface **560** may include any transceiver-like mechanism that enables the server **120** to communicate with other devices and systems via a network, such as the network **140**.

As will be described in detail below, the server **120**, consistent with the present invention, performs certain searching-related operations. The server **120** may perform these operations in response to processor **520** executing software instructions contained in a computer-readable medium, such as memory **530**. The software instructions may be read into memory **530** from another computer-readable medium or from another device via the communication interface **560**. The software instructions contained in memory **530** causes processor **520** to perform processes that will be described later. Alternatively, hardwired circuitry may be used in place of or in combination with software instructions to implement processes consistent with the present invention. Thus, the present invention is not limited to any specific combination of hardware circuitry and software.

Exemplary Processing for Highlighting Search Results Using Browser Assistant

FIG. **6** is a flowchart of exemplary processing for highlighting search results in accordance with an implementation consistent with the present invention. Processing may begin with a user activating web browser software, such as browser **320** (FIG. **3**), and browser assistant software, such as browser assistant **330**, on a client, such as client **110** (FIG. **1**). The user may then provide one or more search terms to the browser assistant **330** [act **610**]. The user may do this, for example, by entering the search terms at an appropriate place in the graphical user interface of the browser assistant **330**. In an implementation consistent with the present invention, a group of search terms may be provided as a phrase or as part of a Boolean expression.

The browser assistant **330** may treat the search terms as a query to a search engine, such as the search engine **125** or a web directory. The browser assistant **330** may generate a request to query the search engine **125** using the search terms and send the request to the search engine **125** [act **620**]. In response to the request, the search engine **125** generates data that contains the search results and sends it back to the browser assistant **330** [act **630**]. The search engine **125** may provide the search results as a HyperText Markup Language (HTML) document, similar to search results provided by conventional search engines. Alternatively, the search engine **125** may provide the search results according to a protocol agreed upon by the search engine **125** and the browser assistant **330**.

In an implementation consistent with the present invention, the search results include references to documents (e.g., web pages), such as links to the documents and possibly a textual description of the links. In another implementation, the search results include references to directory nodes within a hierarchical directory, such as links to the directory nodes and possibly textual descriptions for the directory nodes. In other implementations, the search results include a combination of these references.

The browser assistant **330** receives the list of result links from the search engine **125** [act **640**]. If the list of result links takes the form of an HTML document, then the browser assistant **330** may parse the document to determine the links that form the search results.

The browser assistant **330** may present the result links to the user [act **650**]. For example, the browser assistant **330** may highlight the search terms in the result links and/or any textual descriptions associated with the result links and present the result links as a web page in a browser window. Alternatively, the browser assistant **330** may present the result links as a list of selectable items within a user interface of the browser assistant **330**. In one instance, the user interface of the browser assistant **330** may include a pull-down or pop-up menu. In another instance, the user interface may include a side-bar or a scrolling list.

The user may then select one of the links to retrieve a document corresponding to the link. The user may make the selection, for example, by clicking on one of the links using a pointer, such as a mouse pointer. The browser assistant **330** detects the link selection and retrieves the corresponding document from a server, such as server **130**, in the network **140** [acts **660** and **670**].

The browser assistant **330** may then highlight the search terms in the document [act **680**]. For example, the browser assistant **330** may search the document to locate the search terms. Then for each occurrence of the search terms, the browser assistant **330** may change one or more characteristics of the word(s), such as the font, style, size, color, effect, etc.

The browser assistant **330** may then present the document, with the highlighted search terms, to the user [act **680**]. For example, the browser assistant **330** may display the document as a web page in a browser window or via a pop-up window.

FIG. **7** is a diagram of an exemplary graphical user interface **700** that displays a document with highlighted search terms in a manner consistent with the present invention. In this example, the user has searched for the term "google" and has selected a link on the Google web site for a document relating to "How to Google." As shown, the browser assistant **330** highlights each occurrence of the word "google" in the document. Any conventional highlighting technique may be used. For example, as illustrated in FIG. **7**, the browser assistant **330** may underline each occurrence of the search term.

FIG. **8** is a flowchart of exemplary processing for highlighting search results in accordance with an alternate implementation consistent with the present invention. In this alternate implementation, processing may begin with a user activating web browser software, such as browser **320** (FIG. **3**), and browser assistant software, such as browser assistant **330**, on a client, such as client **110** (FIG. **1**). The user may provide an address, such as a Uniform Resource Locator

(URL), to the browser **320** to access a search engine, such as the search engine **125**, or a web directory in a conventional manner.

The user may then provide one or more search terms to the browser **320** in a conventional manner [act **810**]. The browser assistant **330** may record the search terms for use in a manner described below [act **820**].

The browser **320** may treat the search terms as a query to the search engine **125** or the web directory. The browser **320** may generate a request to query the search engine **125** using the search terms and send the request to the search engine **125** [act **830**]. In response to the request, the search engine **125** generates data that contains the search results and sends it back to the browser **320** [act **840**].

As described above, the search results may include links to documents (e.g., web pages) and possibly a textual description of the links, links to directory nodes within a hierarchical directory and possibly textual descriptions for the directory nodes, or a combination of these links.

The browser **320** receives the list of result links from the search engine **125** [act **850**]. If the list of result links takes the form of an HTML document, then the browser **320** may parse the document to determine the links that form the search results. The browser **320** may present the result links to the user in a conventional manner [act **860**].

The user may then select one of the links to retrieve a document corresponding to the link. The user may make the selection, for example, by clicking on one of the links using a pointer, such as a mouse pointer. The browser **320** detects the link selection and retrieves the corresponding document from a server, such as server **130**, in the network **140** [act **870**].

The browser assistant **330** may intercept the document [act **880**]. The browser assistant **330** may then highlight the search terms in the document and present the highlighted document to the user instead of or in addition to the unhighlighted document [act **890**]. For example, the browser assistant **330** may search the document to locate the search terms. Then for each occurrence of the search terms, the browser assistant **330** may change one or more characteristics of the word(s), such as the font, style, size, color, effect, etc.

Exemplary Network without Browser Assistant

FIG. **9** is an exemplary diagram of an alternate network **900** in which systems and methods consistent with the present invention may be implemented. The network **900** may include multiple clients **910** connected to multiple servers **920–930** via a network **940**. The network **940** may include a LAN, a WAN, a telephone network, such as the PSTN, an intranet, the Internet, a similar or dissimilar network, or a combination of networks. The clients **910** and servers **920–930** may connect to the network **940** via wired, wireless, or optical connections. Two clients **910** and three servers **920–930** have been illustrated as connected to network **940** for simplicity. In practice, there may be more or less clients and servers. Also, in some instances, a client may perform the functions of a server and a server may perform the functions of a client.

The clients **910** may include devices, such as wireless telephones, personal computers, PDAs, lap tops, etc., threads or processes running on these devices, and/or objects executable by these devices. The clients **910** may be configured similar to the clients **110** in FIG. **1**. Unlike the clients **110**, however, the clients **910** do not include browser assistant software.

The servers **920–930** may include server devices, threads, and/or objects that operate upon, search, or maintain documents in a manner consistent with the present invention. The server **920** may include an enhanced search engine **925** and may be configured similar to the server **120** in FIG. **1**. The servers **930** may also be configured similar to the servers **130** in FIG. **1**.

Exemplary Processing for Highlighting Search Results without Using Browser Assistant

FIG. **10** is a flowchart of exemplary processing for highlighting search results in accordance with another implementation consistent with the present invention. Processing may begin with a search engine, such as the enhanced search engine **925** on the server **920**, periodically crawling the network **940**. The search engine **925** may use a spider (i.e., a program that crawls a network to locate publicly accessible resources, such as web pages or other documents) to locate documents on the network **940**. For each document located, the search engine **925** may save a copy of it [act **1010**].

When a user decides to perform a search of the network **940**, the user may activate a web browser, such as the browser **320**. The user may then provide one or more search terms to the browser **320** in a conventional manner [act **1020**]. The browser **320** may treat the search terms as a query to a search engine, such as the search engine **925**, or a web directory. The browser **320** may generate a request to query the search engine **925** using the search terms and send the request to the search engine **925** [act **1030**]. In response to the request, the search engine **925** generates data that contains the search results and sends it back to the browser **320** [act **1040**].

As described above, the search results may include links to documents (e.g., web pages) and possibly a textual description of the links, links to directory nodes within a hierarchical directory and possibly textual descriptions for the directory nodes, or a combination of these links.

The browser **320** receives the list of result links from the search engine **925** [act **1050**]. If the list of result links takes the form of an HTML document, then the browser **320** may parse the document to determine the links that form the search results. The browser **320** may present the result links to the user in a conventional manner [act **1060**].

The user may then select one of the links to retrieve a document corresponding to the link. The user may make the selection, for example, by clicking on one of the links using a pointer, such as a mouse pointer. The browser **320** detects the link selection and notifies the search engine **925** of which link has been selected [act **1070**].

The search engine **925** may then retrieve its saved copy of the document, highlight the search terms in the document, and present the highlighted document to the browser **320** instead of or in addition to the unhighlighted document [act **1080**]. For example, the search engine **925** may search the document to locate the search terms. Then for each occurrence of the search terms, the search engine **925** may change one or more characteristics of the word(s), such as the font, style, size, color, effect, etc. Upon receiving the document, the browser **320** may provide the highlighted document to the user [act **1090**].

In another implementation consistent with the present invention, the search engine **925** performs the highlighting function off-line. In this case, the search engine **925** may highlight the search terms in the documents corresponding to all of the result links, or a predetermined number of result

links, and transmit the highlighted documents, or a predetermined number of the highlighted documents, to the browser **320**. Alternatively, the search engine **925** may wait for the user to select one of the links before transmitting the highlighted document(s) to the browser **320**.

While the foregoing acts have been described as being performed by the server **920**, the acts may be performed by one of the servers **930** in other implementations consistent with the present invention.

Conclusion

Systems and methods, consistent with the present invention, highlight search terms in retrieved documents to aid a user in determining the relevance of the documents and locate relevant information within the documents.

The foregoing description of preferred embodiments of the present invention provides illustration and description, but is not intended to be exhaustive or to limit the invention to the precise form disclosed. Modifications and variations are possible in light of the above teachings or may be acquired from practice of the invention. For example, while a series of acts have been described with regard to FIGS. **6**, **8**, and **10**, the order of the acts may be modified in other implementations consistent with the present invention.

Also, two separate network configurations have been described with regard to FIGS. **1** and **9**. Other configurations or a combination of configurations may occur in other implementations consistent with the present invention.

The scope of the invention is defined by the claims and their equivalents.

What is claimed is:

1. A method performed by a client device for highlighting search terms in web documents distributed over a network, comprising:

generating a search query including a search term;

receiving a list of one or more links to web documents distributed over the network in response to the search query;

receiving selection of one of the links;

retrieving a web document corresponding to the selected link from the network;

intercepting the web document; and

highlighting one or more occurrences of the search term in the intercepted web document.

2. The method of claim **1**, wherein the highlighting includes:

automatically searching the intercepted web document to locate each occurrence of the search term, and

for each occurrence of the search term, changing a characteristic of the search term in the intercepted web document.

3. The method of claim **2**, wherein the changing includes:

changing at least one of a color, font, style, effect, and size of the search term in the intercepted web document.

4. The method of claim **1**, further comprising:

providing the intercepted web document with the highlighted search term to a user.

5. The method of claim **1**, wherein the generating includes:

sending the search query to one of a search engine and a web directory to obtain the list of one or more links.

6. A system for highlighting search terms in documents remotely distributed over a network to aid in the determination of relevance of the documents, comprising:

means for generating a search query including one or more search terms;

means for receiving a list of one or more references to documents in the network in response to the search query;

means for highlighting one or more occurrences of the one or more search terms in the list of one or more references;

means for receiving selection of one of the one or more references;

means for retrieving a document corresponding to the selected reference; and

means for highlighting the one or more search terms in the retrieved document.

7. A client device that highlights search terms in web documents remotely distributed over a network to aid in the determination of relevance of the web documents, comprising:

a memory configured to store instructions; and

a processor configured to execute the instructions in the memory to receive a search query that includes one or more search terms, obtain a list of one or more links to web documents distributed over the network using the search query, obtain selection of one of the links, download a web document corresponding to the selected link from the network, intercept the web document, and highlight the one or more search terms in the intercepted web document.

8. A browser assistant that interacts with a browser on a client device, comprising:

instructions for generating a search query including a search term;

instructions for obtaining a list of one or more links to web documents distributed over the Internet using the search query;

instructions for obtaining selection of one of the links;

instructions for retrieving a web document corresponding to the selected link from the Internet;

instructions for intercepting the web document; and

instructions for highlighting the search term in the intercepted web document.

9. A computer-readable medium that stores instructions executable by at least one processor, comprising:

a browser configured to generate a search query that includes a search term, receive a list of one or more references to documents distributed over a network in response to the search query, receive selection of one or more of the references, and retrieve one or more documents corresponding to the selected one or more references; and

a browser assistant configured to intercept the one or more documents, highlight the search term in the one or more documents, and present the one or more documents, with the highlighted search term, to a user.

10. The computer-readable medium of claim **9**, wherein when highlighting, the browser assistant is configured to identify the search term in the one or more documents and, for each occurrence of the search term in the one or more documents, change a characteristic of the search term.

11. A web browser stored on a computer-readable medium, comprising:

instructions for obtaining a search term;

instructions for generating a search query from the search term;

instructions for obtaining a list of references to documents distributed over a network using the search query, the

references including links to the documents and textual descriptions of the links;

instructions for highlighting occurrences of the search term in the list of references;

instructions for retrieving a document corresponding to one of the references;

instructions for highlighting each occurrence of the search term in the retrieved document; and

instructions for displaying the highlighted document to a user.

* * * * *