(12) INTERNATIONAL APPLICATION PUBLISHED UNDER THE PATENT COOPERATION TREATY (PCT)

(19) World Intellectual Property Organization
International Bureau

(43) International Publication Date
17 April 2008 (17.04.2008)

PCT

(10) International Publication Number
WO 2008/044171 A2

(51) International Patent Classification:
H05B 33/08 (2006.01) *H04M 1/22* (2006.01)

(21) International Application Number:
PCT/IB2007/054036

(22) International Filing Date: 4 October 2007 (04.10.2007)

(25) Filing Language: English

(26) Publication Language: English

(30) Priority Data:
06122131.3 11 October 2006 (11.10.2006) EP
06126989.0 22 December 2006 (22.12.2006) EP

(71) Applicant *(for all designated States except US)*: **KONINKLIJKE PHILIPS ELECTRONICS N.V.** [NL/NL]; Groenewoudseweg 1, NL-5621 BA Eindhoven (NL).

(72) Inventors; and
(75) Inventors/Applicants *(for US only)*: **VAN WOUDENBERG, Roel** [NL/NL]; c/o High Tech Campus Building 44, NL-5656 AE Eindhoven (NL). **JACOBS, Jean, P.** [NL/NL]; c/o High Tech Campus Building 44, NL-5656 AE Eindhoven (NL). **HOELEN, Christoph, G., A.** [NL/NL]; c/o High Tech Campus Building 44, NL-5656 AE Eindhoven (NL). **ANSEMS, Johannes, P., M.** [NL/NL]; c/o High Tech Campus Building 44, NL-5656 AE Eindhoven (NL). **WAUMANS, Lars, R., C.** [NL/NL]; c/o High Tech Campus Building 44, NL-5656 AE Eindhoven (NL).

(74) Agents: **BEKKERS, Joost, J., J.** et al.; High Tech Campus Building 44, NL-5656 AE Eindhoven (NL).

(81) Designated States *(unless otherwise indicated, for every kind of national protection available)*: AE, AG, AL, AM, AT, AU, AZ, BA, BB, BG, BH, BR, BW, BY, BZ, CA, CH, CN, CO, CR, CU, CZ, DE, DK, DM, DO, DZ, EC, EE, EG, ES, FI, GB, GD, GE, GH, GM, GT, HN, HR, HU, ID, IL, IN, IS, JP, KE, KG, KM, KN, KP, KR, KZ, LA, LC, LK, LR, LS, LT, LU, LY, MA, MD, ME, MG, MK, MN, MW, MX, MY, MZ, NA, NG, NI, NO, NZ, OM, PG, PH, PL, PT, RO, RS, RU, SC, SD, SE, SG, SK, SL, SM, SV, SY, TJ, TM, TN, TR, TT, TZ, UA, UG, US, UZ, VC, VN, ZA, ZM, ZW.

(84) Designated States *(unless otherwise indicated, for every kind of regional protection available)*: ARIPO (BW, GH, GM, KE, LS, MW, MZ, NA, SD, SL, SZ, TZ, UG, ZM, ZW), Eurasian (AM, AZ, BY, KG, KZ, MD, RU, TJ, TM), European (AT, BE, BG, CH, CY, CZ, DE, DK, EE, ES, FI, FR, GB, GR, HU, IE, IS, IT, LT, LU, LV, MC, MT, NL, PL, PT, RO, SE, SI, SK, TR), OAPI (BF, BJ, CF, CG, CI, CM, GA, GN, GQ, GW, ML, MR, NE, SN, TD, TG).

Declaration under Rule 4.17:
— *as to applicant's entitlement to apply for and be granted a patent (Rule 4.17(ii))*

Published:
— *without international search report and to be republished upon receipt of that report*

(54) Title: LED BASED LUMINAIRE AND LIGHTING DEVICE

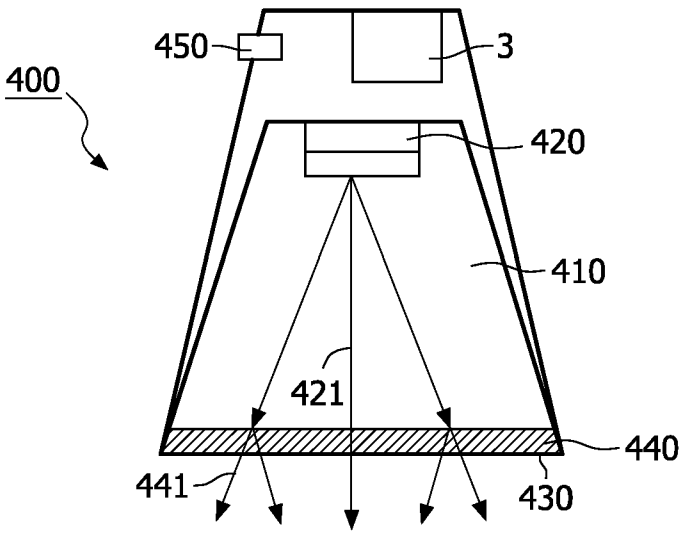

(57) Abstract: Proposed is a lighting device (1), comprising a phosphor coated light emitting diode (2). Also proposed is a luminaire (400), comprising a light emitting diode (420) and a transparent window (430) coated with a phosphor layer (440) for emitting light from the luminaire. The lighting device and luminaire furthermore comprise means (3) for providing a residual current to the (phosphor coated) light emitting diode (2,420) in the functional off-state of the lighting device. This is especially advantageous when there is a need to realize a neutral white appearance of its lighting device and/or luminaire in the functional off-state, such as e.g. in the case of an auxiliary light in a mobile phone or a down- light unit.

WO 2008/044171 A2

Elong Int'l USA Inc. - EX1020

LED based Luminaire and Lighting Device

FIELD OF THE INVENTION

The invention relates in general to a luminaire comprising light emitting diodes and more particularly a luminaire comprising LEDs and a transparent window coated with a color-converting layer, such as a phosphor layer. Furthermore, the invention relates to a method for a reproducibly adjustable color control mechanism in such luminaires. Moreover the invention relates to lighting devices comprising phosphor-coated LEDs.

BACKGROUND OF THE INVENTION

Devices of the kind set forth are well known. Since phosphor-coated light emitting diodes (pc-LEDs) producing white light where invented about a decade ago, they have found their way to a wide variety of applications. For instance, they are used as light sources in backlight units of LCD screens, as indicator lights in electronic devices, as auxiliary illumination sources in digital video cameras and mobile phones with an imaging function. Moreover, pc-LEDs are applied in automotive headlights and in torches (for either terrestrial handheld, mountaineering headsets or diving purposes). Furthermore, as the efficacy and output power of pc-LEDs increases their penetration in general purpose illumination devices is expected to grow considerably.

In a large number of the above-mentioned applications of pc-LEDs the user can look directly into the LED package(s) assembled in the lighting device. Such devices are of the so-called direct view type, in contrast to the indirect view type where the LED packages are obstructed from direct view by beam stops or other optical structures and elements. Whenever the pc-LED package is visible to the user in the functional off state of the lighting device it can be clearly recognized by its distinguished yellowish color. This color results from the optical characteristics of the phosphor applied within the LED package. The same coloring effect occurs in the functional off state of a luminaire comprising LEDs as light sources and a transparent window coated with a color-converting layer, such as a phosphor.

The distinguished yellowish appearance of pc-LEDs and the luminaire in their functional off state is in a large number of applications a disturbing feature. As an example the mobile phone with an imaging function and an auxiliary illumination source can be given. The

mobile phone market is characterized by its rapid evolution of phone models and types. Many people perceive these models, apart from all their functional features, as a lifestyle accessory. As such, image and look are essential selling points. In this context, the clearly visible yellowish spot of the pc-LED auxiliary light is repeatedly challenged by the design department of many a phone manufacturer. Therefore, there is a clear need for a reproducibly adjustable color control mechanism of pc-LEDs in their functional off state.

SUMMARY OF THE INVENTION

It is an object of the present invention to provide a lighting device of the kind set forth, in which the pc-LED package is controlled to appear neutral white in the functional off state of the lighting device. This object is achieved with the lighting device according to the invention as defined in claim 1. A lighting device comprising a phosphor coated light emitting diode, characterized in that the device comprises control means for providing a residual current to the phosphor coated light emitting diode in the functional off-state of the lighting device, to realize a neutral white appearance of the lighting device in its functional off-state.

The invention provides a lighting device that still provides a very minute amount of light in the functional off state of the device. However, this amount of light is so small that the device in this functional off state can in almost all practical circumstances not be used for its intended purpose. As a result of the residual current running through the pc-LED in the functional off state of the lighting device, the tiny amount of light produced by the pc-LED outshines the reflected ambient light – which due to the optical characteristics of the phosphor is filtered to become yellowish – from the pc-LED. Hence, the pc-LED will appear to have a neutral white color to the human eye.

In an embodiment of the present invention the lighting device comprises means for providing a nominal current to the phosphor coated LED in the functional on state, the ratio of the residual current to the nominal current being smaller than 10^{-3}, or preferably smaller than 10^{-5}.

In another embodiment of the present invention the lighting device further comprises a sensor to detect the ambient lighting level characterized in that the control means, based on the output of the sensor, sets the residual current in the functional off state of the device to zero below a predetermined ambient lighting level.

It is another aspect of the invention to provide a luminaire comprising an optical cavity comprising at least one LED and a transparent window, provided with a color converting layer, covering the optical cavity and enabling light to be emitted from the

luminaire, characterized in that the luminaire comprises control means for providing a residual current to the at least one LED in the functional off state of the luminaire, to realize a neutral white appearance of the color converting layer in the functional off state.

In an embodiment, the luminaire further comprising a sensor to detect an ambient lighting level, characterized in that the control means is provided to adjust the residual current in dependence of the ambient lighting level based on a signal from the sensor. This is beneficial, as higher ambient lighting levels require a larger residual current in order to outshine the reflected ambient light. Moreover, at lower ambient lighting levels the residual current can be reduced making the luminaire more energy efficient.

In another embodiment, the control means in the luminaire according to the invention, sets the residual current to zero below a predetermined ambient lighting level, based on the signal from the sensor. Again, this is beneficial to save energy.

In an embodiment,

These and other aspects of the invention will be apparent from and elucidated with reference to the embodiments described hereinafter.

OTHER PRIOR ART

Patent application US2005/0148364 describes a mobile telephone device having an imaging function and an auxiliary lighting device. This auxiliary lighting device is described to include red, green and blue LEDs. Furthermore, the auxiliary lighting device is designed to have essentially a two-step illumination level: a low 'shooting' mode and a high 'flash' mode. In the low 'shooting' mode, the current supplied to the RGB LEDs is controlled to illuminate an object at a low level with a white spot light so that the object can clearly be confirmed. This is especially practical in dimly lit and/or dark environments where the object could not readily be recognized without the low level illumination. Once the object has been confirmed and an image is to be taken, the auxiliary lighting device switches over to the high 'flash' mode. In the 'flash' mode the current supplied to the RGB LEDs is boosted in order to emit sufficient light that a high quality picture can be obtained. Typically the current supplied to the LEDs is the low 'shooting' mode is 50% of the current supplied in the 'flash' mode.

Although it is clear from the above that US2005/0148364 describes a lighting device comprising LEDs where the current to the LEDs can be controlled to dim/boost the light output of the LEDs, the dim/boost facility is clearly envisioned to be operable in the functional on state of the lighting device. Furthermore, as US2005/0148364 does not appreciate that also

pc-LEDs can be used in the lighting device, it does not teach to control the visible appearance of pc-LEDs in their functional off state.

BRIEF DESCRIPTION OF THE DRAWINGS

Further details, features and advantages of the invention are disclosed in the following description of exemplary and preferred embodiments in connection with the drawings.

Fig. 1 shows schematically a lighting device of the kind set forth.

Fig. 2 shows a graph of the spectral power distribution of the light emitted by a pc-LED using a specific phosphor and the absorption spectrum of that phosphor.

Fig. 3 shows a mobile phone including a digital camera and auxiliary lighting device.

Fig. 4 shows a luminaire according to the invention

DETAILED DESCRIPTION OF THE EMBODIMENTS

Fig. 1 shows a lighting device 1 comprising pc-LEDs 2, a controller 3, and a power circuit 4. The lighting device 1 is connected to a power source 5, which could be either an AC source or a DC source like a battery. A user operable command 6 – either manually or through a user-interface device (not shown) – signals the controller 3 to switch between the functional on state of the lighting device 1 and its functional off state. The controller in turn regulates the power circuit 4 to provide a current to the pc-LED 2 at a level consistent with the functional on state or functional off state of the lighting device 1. There are many electrical circuit topologies known in the art that are suitable for this purpose. In fact, actively controlling the power circuit 4 is not essential for the invention. The person skilled in the art will readily appreciate that alternatively many passive circuit topologies are conceivable.

The functional off state of the lighting device 1 is defined, as the state in which the amount of light emitted is so small that the device 1 can in almost all practical circumstances not be used for its intended functional purpose. As an example, a lighting device 1 intended to illuminate an object or scene at a nominal lux-level in order to facilitate the execution of a task, for instance reading a book, is considered to be in the functional off state when it is dimmed to such a level that it no longer facilitates the envisioned task. Usually this functional off state is already reached well above the dimming range available in lighting devices. Dimming ranges from about 3% to 100% are commonly used in lighting applications.

Therefore, it is safe to define the functional off state at output levels below 0.1% of the nominal design level.

It is recognized that at very low ambient lighting levels the human eye accommodates in order to take advantage of the minute amount of light still present. Under such conditions it could be argued that the tiny amount of light emitted by the lighting device 1 in its functional off state becomes 'functional'. In other words, under such circumstances the device 1 will facilitate the user in his envisioned task. However, it is also recognized that the capabilities of the human eye to distinguish colors is heavily reduced at these dim ambient lighting levels, as the visual system changes over from photopic to scotopic vision. Hence, the disturbing yellowish appearance of pc-LEDs vanishes and the lighting device 1 can be completely turned 'off', *i.e.* no residual current, below a preset ambient lighting level. As LEDs exhibit a photo-induced current, the LED itself can function as a sensor to measure the ambient lighting level.

Fig. 2 is a graph of the spectral power distribution 200 of the light emitted by a pc-LED using a specific phosphor. The spectral power distribution 200 consists of two contributing parts 210 and 220. The first part 210 is the 'primary light' emitted by the LED chip it self. Typically an InGaN semiconductor with a peak emission wavelength in the range 430 – 480 nm is used in these applications. The second part 220 is the 'secondary light' emitted by the phosphor after it has been excited by (part of) the 'primary light'. A well-known phosphor in these applications is cerium doped Yttrium Aluminum Garnet (YAG:Ce). Moreover, there are many phosphors known in the art, each with their specific advantages relative to efficacy and color rendering. It is the combination of both parts 210 and 220 in the combined spectrum 200 that is perceived as white by the human eye. Such blending of colors is known as additive color mixing.

Also shown in Fig. 2 is (part of) the absorption spectrum 230 of the phosphor. It is clear that this absorption spectrum 230 extends from the (near) UV into the visible part of the electromagnetic spectrum, especially the blue part. It is this absorption characteristic of the phosphor that causes it to appear yellowish under a white light ambient environment by preferentially filtering out the blue part of the ambient spectrum. It is this yellowish appearance of the pc-LED under ambient lighting conditions that is disturbing in many application areas.

It is noted that state of the art pc-LEDs do no longer apply a phosphor powder deposited on the LED chip, embedded in or dispersed on the index matching silicon dome, or in any other arrangement known in the art. Instead ceramic platelets comprising the phosphor (or color converter) are arranged in a light receiving relationship in the direct vicinity of the

LED chip. For the purpose of this invention, the term 'pc-LED' is intended to include these later ceramic platelets.

Fig. 3 shows a mobile phone 300 including a digital camera 320 and an auxiliary lighting device 310. The mobile phone 300 includes a (color-) screen – which may have a backlight using pc-LEDs described herein – and a keypad, both not shown. The auxiliary lighting device 310 is used as a flashlight in order to facilitate photographs and/or video pictures to be taken in cloudy, dark or nighttime conditions.

In order to provide sufficient illumination of the scene or object of which a picture is to be taken, modern mobile phones 300 are equipped with at least one high power pc-LED 312 in the auxiliary lighting device 310. An example of such a pc-LED 312 is the Philips LumiLeds *Luxeon Flash*. These LEDs can sustain very high peak currents for enabling the desired flash function. Typically the peak current in the functional on state, *i.e.* when creating the flash, is 1000mA for a flash period up to 300msec. At the typical forward voltage of 3.6V about 3.6W power is supplied to the LEDs in this functional on state. A single *Luxeon Flash* LED can thus create up to 79 lux at a 1m distance, compared to about 6 lux produced by a conventional pc-LED. It is noted that these *Luxeon Flash* LEDs can also be driven in a continuous mode at currents of about 350mA or lower to generate a low level illumination of a scene or object.

According to the present invention the pc-LED 312 is supplied with a very small residual current in order to control its visual appearance to be neutral white in the functional off state of the auxiliary lighting device 310. This residual current can be as small as 9μA, supplying only about 21μW to the pc-LED 312. Such power consumptions in the functional off state will hardly effect battery life time. Indeed, a typical mobile phone battery has a capacity of about 400 – 1000mAh at 3.6V. This is equivalent to 1.4 – 3.6Wh. Therefore, when typically 20μW is used continuously to control the pc-LED's 312 visual appearance to be a neutral white, the mobile phone battery has a capacity for 70 – 180khours. This capacity is far beyond the useful economical life of the mobile phone itself.

Fig. 4 shows a down-light luminaire 400 suitable for indoor illumination purposes. The luminaire 400 comprises an optical cavity 410 in which at least one LED 420 is assembled. The LEDs 420 are able to emit a relative short wavelength 'primary light' 421. Furthermore, the luminaire 400 comprises a transparent window 430 covering the optical cavity 410 through which the light generated by the LED(s) 420 can be transmitted. Moreover, the window 430 is provided with a color-converting coating or layer 440, for instance through silkscreen printing, spin coating or any other appropriate coating technology known in the art.

The color-converting layer 440 partially absorbs the primary light 421 and converts it in relatively long wavelength 'secondary light' 441. The human eye perceives the combined primary and secondary light emitted from the luminaire 400 as white light if the appropriate (mix of) color-converting material is applied. This material could be a phosphor or phosphor mixture such as *e.g.* YAG/CAS. Alternatively, it could be an organic color converter (or mixture) such as *e.g.* a coumarin or quinoline dye. A luminaire 400 of this kind is known as a 'remote phosphorescent' or 'remote fluorescent' luminaire.

Like the individual pc-LEDs, the remote fluorescent luminaires 400 do not have a whitish appearance under ambient lighting conditions when turned off. Instead, they are perceived to have a distinct off-white - mostly yellowish - color, depending on the absorption characteristics of the material in the color-converting layer 440. Converting the off-white appearance of the luminaire 400 into a neutral white appearance presents itself as a technical problem. The present invention provides a solution by incorporating control means 3 in the luminaire 400 for providing a residual current to the at least one LED in the functional off state of the luminaire, to realize a neutral white appearance of the color converting layer 440 in the functional off state. As a result, the mix of primary 421 and secondary 441 light generated in the luminaire 400 outshines the reflected ambient light from the luminaire.

The residual current I provided to a LED 420 necessary to make the luminaire 400 appear as neutral white will in general depend on the area A of the coated window 430, on the ambient lighting level E, and on the number of LEDs N in the luminaire according to the relationship

$$I = c(E) \times \frac{A}{N} \qquad (1)$$

For typical indoor lighting levels E of upto a few hundred lux the coefficient c lies in the range $0.03\ mA/cm^2 < c < 3\ mA/cm^2$.

As an example, consider a down lighter 400 having a phosphor coated (e.g. YAG/CAS) window 430 with a diameter of 6 cm (area $A = 28\ cm^2$), comprising N=20 1W InGaN LEDs 420, and having an efficacy of 50 lm/W. Such a down lighter 400 typically produces a flux of 1000 lm. With $c = 0.3\ mA/cm^2$, the residual current to each individual LED 420 is I = 0.42 mA. Alternatively, it is possible to provide the residual current to only a part of the LEDs 420 present in the luminaire 400. For instance, in the down lighter example providing the residual current to only half of the LEDs 420 present, implies that the current

level will have to be set to I = 0.84 mA per 'active' LED. Distributing the residual current non-homogeneously still is another alternative. For instance, in the down lighter example providing 10 LEDs 420 with I_{aver}, 5 LEDs with $0.5xI_{aver}$, and 5 LEDs with $2xI_{aver}$, in which the average residual current I_{aver} = 0.42 mA, results in a similar appearance of the luminaire 400.

Another example is a luminaire 400 comprising a phosphor-coated window 430 with lateral dimensions 113 x 3 cm^2 (area A=340 cm^2) mounted at some distance from the 1W LEDs 420 (N=40). Such a luminaire is suitable to replace a typical TL luminaire. Again, typical indoor ambient lighting levels (c = 0.3 mA/cm^2) require an average residual current I = 2.7 mA per LED for the luminaire 400 to appear whitish.

In an embodiment of the invention, the luminaire 400 comprises a photo sensor 450 to detect the ambient lighting level E. The control means 3 adjusts the residual current to the LED(s) 420 in relation to the lighting level E, based on the sensor signal. This is beneficial, as higher ambient lighting levels require a larger residual current in order to outshine the reflected ambient light. Moreover, at lower ambient lighting levels the residual current can be reduced making the luminaire 400 more energy efficient. In fact, the residual current can be set to zero below a predetermined ambient lighting level, as the capabilities of the human eye to distinguish colors is heavily reduced at these dim ambient lighting levels, as the visual system changes over from photopic to scotopic vision.

The dependence of the residual current I for each LED 420 on the ambient lighting level E can further be clarified and written as

$$I = c^{\#} \times \frac{A \times E}{N} \qquad (2)$$

with $c^{\#}$ typically in the range 1 mA/lm < $c^{\#}$ < 100 mA/lm, depending on the characteristics of the color converting material. $c^{\#}$ = 10 mA/lm is typical for a YAG/CAS phosphor mixture and an overall luminaire 400 efficacy of 50 lm/W.

In an embodiment, the luminaire 400 comprises a 'presence sensor' or is able to receive a signal from an external 'presence sensor'. The 'presence sensor' signals the luminaire 400 on the presence of people. In the absence of people, i.e. with a 'zero presence signal', the residual current provided to the LEDs 420 in the luminaire 400 is turned off to safe power.

Although the invention has been elucidated with reference to the embodiments described above, it will be evident that other embodiments may be alternatively used to achieve the same object. The scope of the invention is therefore not limited to the embodiments

described above, but can also be applied to any other application device where a lighting device comprising pc-LEDs is preferred to have a neutral white appearance in the functional off state of that device, such as for instance down-lights, automotive headlamps and Day Time Running lights, digital video cameras, torches, etc. Moreover, the invention can be applied in luminance panels for atmosphere creation, guidance, signage, poster backlighting panels, and for LED based backlighting modules for LCD panels.

CLAIMS:

1. A lighting device (1) comprising:

- A phosphor coated light emitting diode (2),

characterized in that

- The device comprises control means (3) for providing a residual current to the phosphor coated light emitting diode in the functional off-state of the lighting device, to realize a neutral white appearance of the lighting device in its functional off-state.

2. A lighting device (1) according to claim 1, further comprising means for providing a nominal current to the pc-LED (2) in the functional on-state, the ratio of the residual current to the nominal current being smaller than 10-3.

3. A lighting device (1) according to claim 2, wherein the ratio is smaller than 10-5.

4. A lighting device (1) according to any of the preceding claims, further comprising a sensor to detect the ambient lighting level characterized in that the control means (3), based on the output of the sensor, sets the residual current in the functional off-state of the device (1) to zero below a predetermined ambient lighting level.

5. A lighting device (1) according to claim 4, characterized in that the sensor is the pc-LED itself.

6. An electronic device (300) comprising a lighting device (1) according to any of the preceding claims.

7. A method to make a lighting device (1) appear white in the functional off-state of the lighting device, said lighting device comprising a phosphor coated light emitting diode (2), characterized in that

A residual current is provided to the phosphor coated light emitting diode in the functional off-state of the lighting device.

8 A luminaire (400), comprising:

- An optical cavity (410) comprising at least one LED (420)
- A transparent window (430), provided with a color converting layer (440), covering the optical cavity and enabling light to be emitted from the luminaire, characterized in that
- The luminaire (400) comprises control means (3) for providing a residual current to the at least one LED (420) in the functional off state of the luminaire, to realize a neutral white appearance of the color converting layer (440) in the functional off state.

9 A luminaire (400) according to claim 8, further comprising a sensor (450) to detect an ambient lighting level, characterized in that the control means (3) is provided to adjust the residual current in dependence of the ambient lighting level based on a signal from the sensor (450).

10 A luminaire (400) according to claim 9, characterized in that the control means (3), based on the signal from the sensor (450), sets the residual current to zero below a predetermined ambient lighting level.

11 A luminaire (400) according to any of the claims 8 to 10, characterized in that the control means (3) is provided to adjust the residual current based on a signal from a presence sensor.

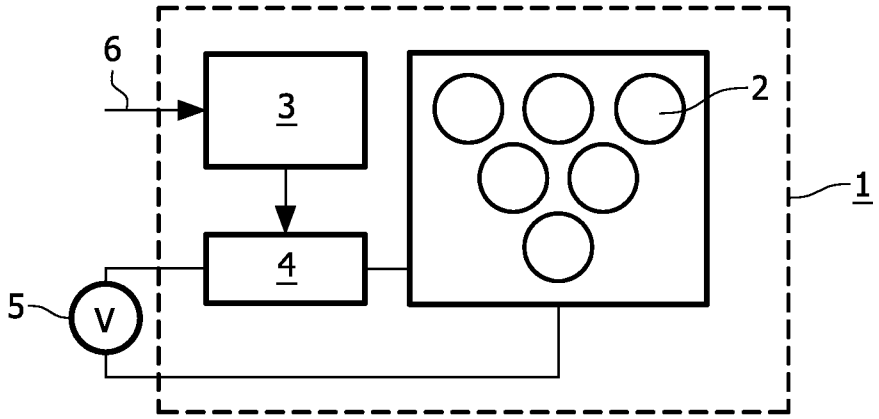
6
3
2
1
4
5
V

FIG. 1

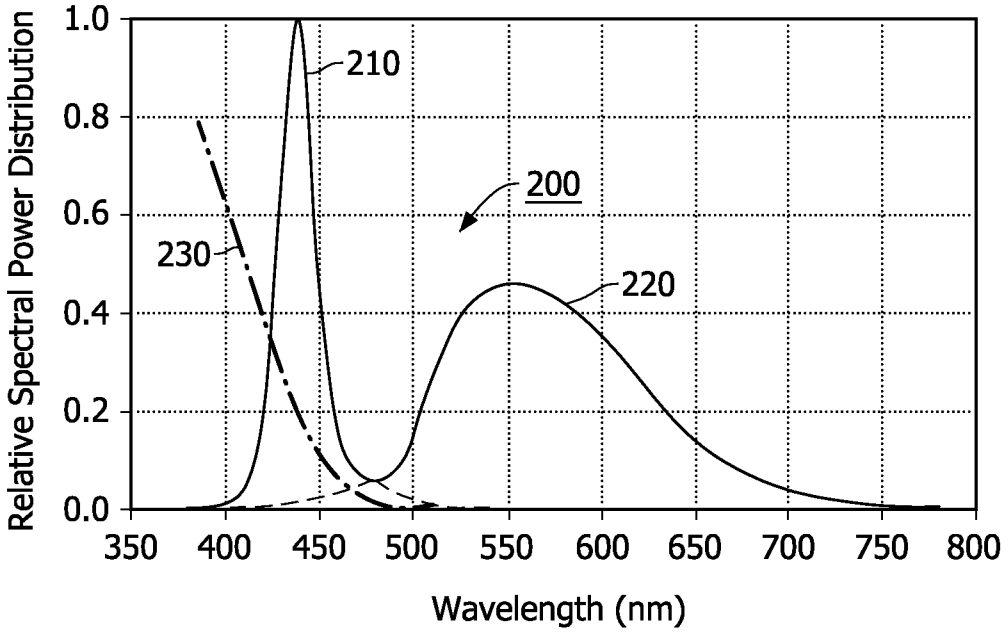
Relative Spectral Power Distribution
1.0
0.8
0.6
0.4
0.2
0.0
350
400
450
500
550
600
650
700
750
800
Wavelength (nm)
210
200
230
220

FIG. 2

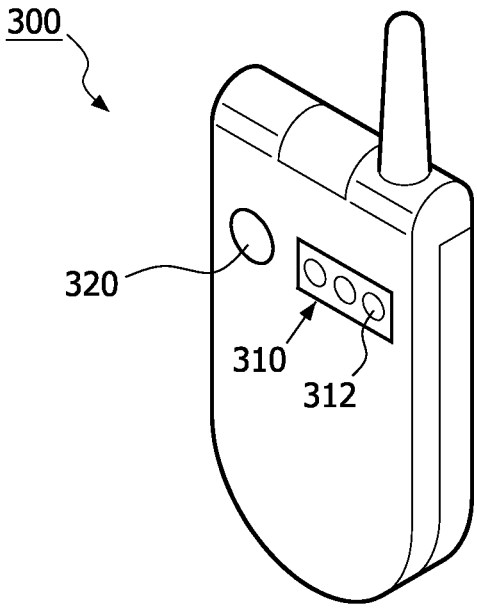

FIG. 3

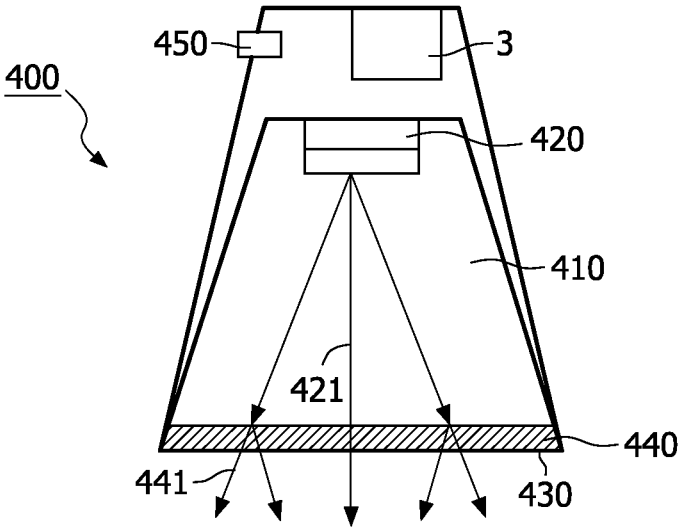

FIG. 4