US 20070045761A1

(19) United States

(12) Patent Application Publication

(10) Pub. No.: US 2007/0045761 A1

(43) Pub. Date: Mar. 1, 2007

Basin et al.

(54) COLOR CONVERTED LIGHT EMITTING DIODE

(75) Inventors: **Grigoriy Basin**, San Francisco, CA (US); **Paul S. Martin**, Pleasanton, CA (US); **Robert Scott West**, Morgan Hill, CA (US); **Yasumasa Morita**, Sunnyvale, CA (US); **Tewe Heemstra**, Veldhoven (NL)

Correspondence Address:
PATENT LAW GROUP LLP
2635 NORTH FIRST STREET
SUITE 223
SAN JOSE, CA 95134 (US)

(73) Assignee: **Lumileds Lighting U.S, LLC**

(21) Appl. No.: **11/212,280**

(22) Filed: **Aug. 26, 2005**

Publication Classification

(51) **Int. Cl.**
H01L 31/00 (2006.01)

(52) **U.S. Cl.** **257/440**

(57) **ABSTRACT**

A technique for forming a white light LED is disclosed. In one embodiment, the LED emits blue light. A first phosphor for producing red, yellow, yellow-green, or green light is formed to conformably coat the LED die. One suitable deposition technique is electrophoretic deposition (EPD). Over the resulting LED structure is deposited another phosphor (to add the remaining color component) in a binder (e.g., silicone) for encapsulating the die. The blue LED light combines with the two phosphor colors to create white light. Since the two different deposition techniques are independent and easily controllable, the resulting white light temperature is highly controllable and the color emission is substantially uniform.

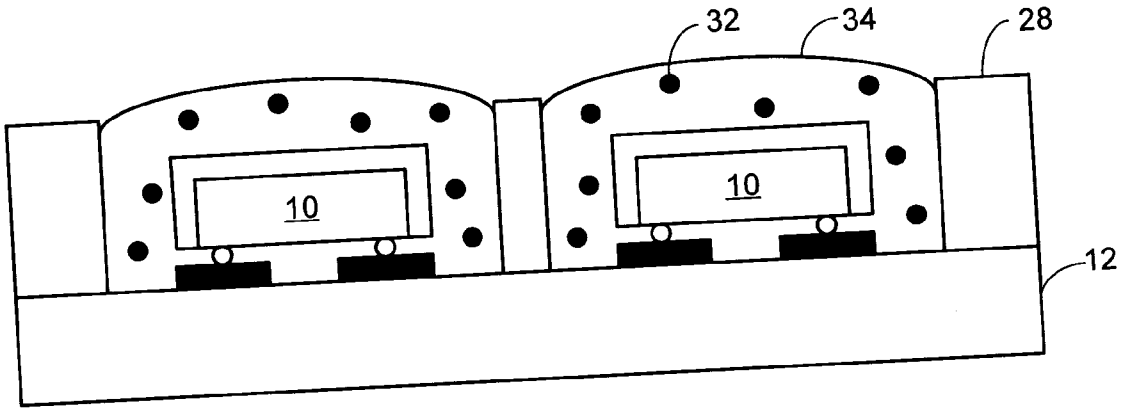

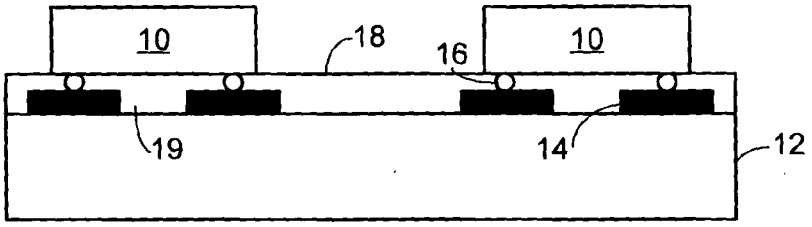

Fig. 1

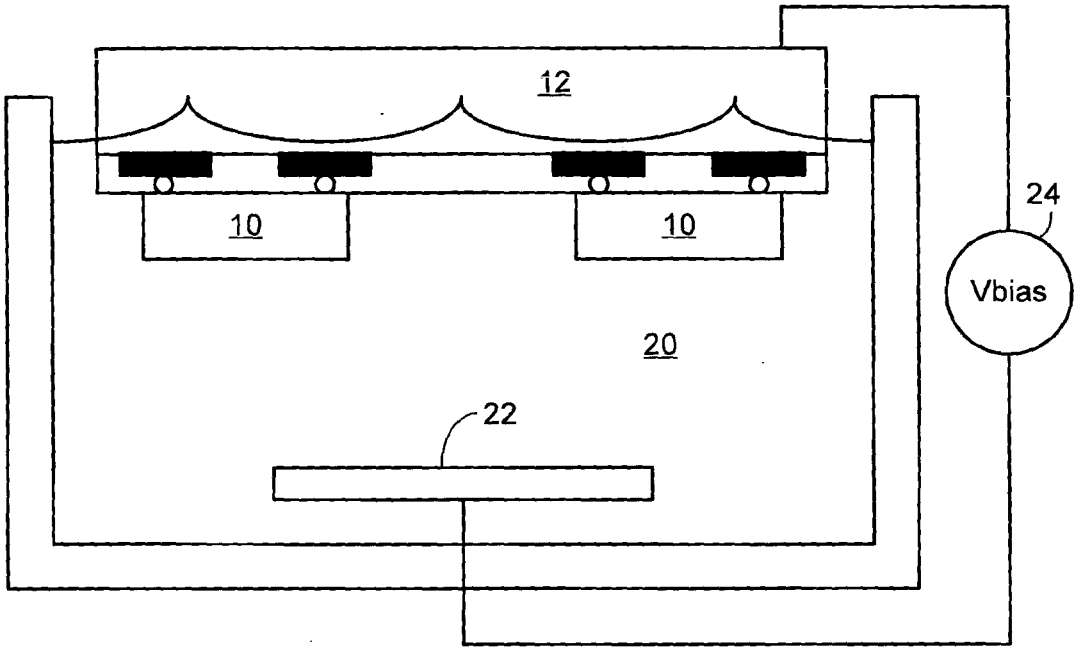

Fig. 2

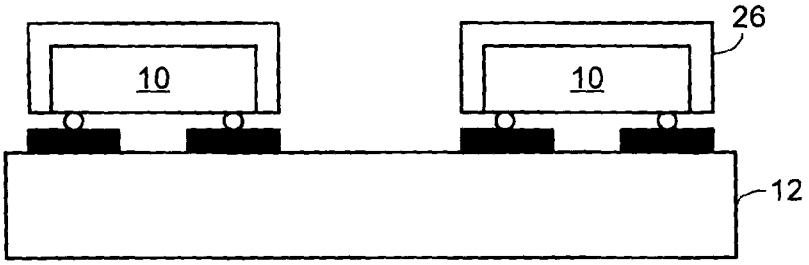

Fig. 3

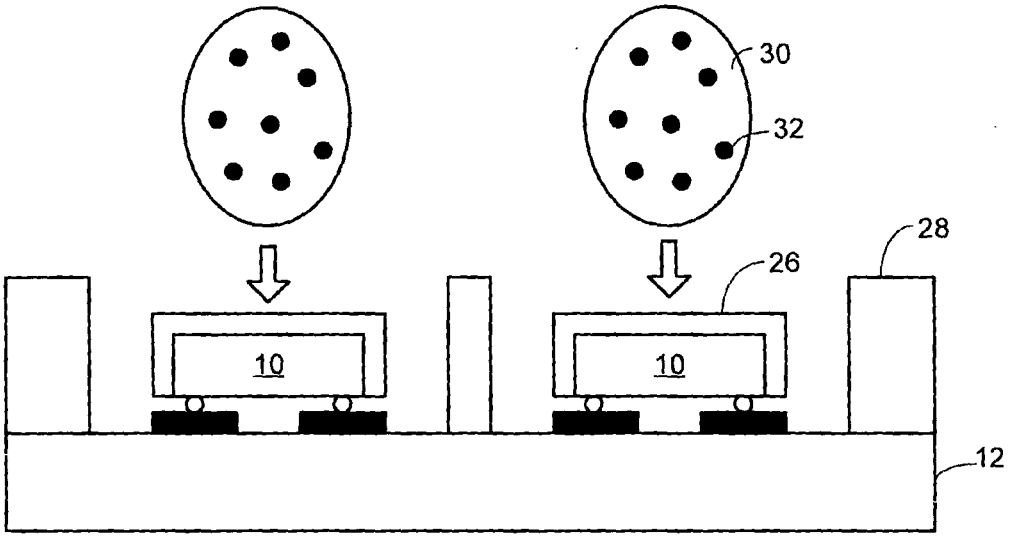

Fig. 4

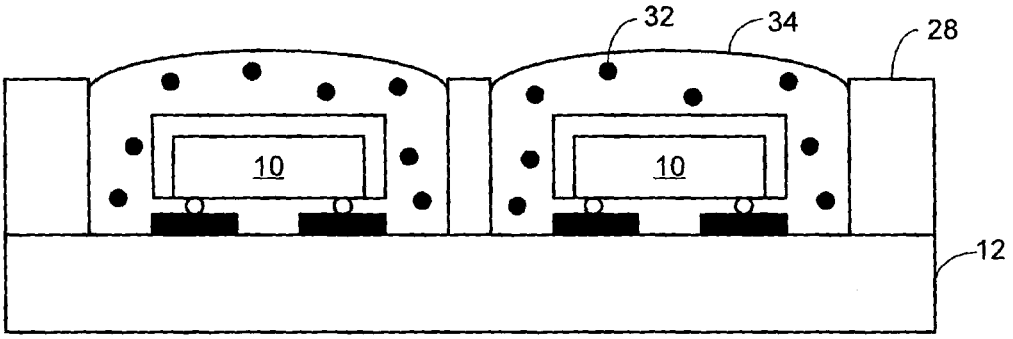

Fig. 5

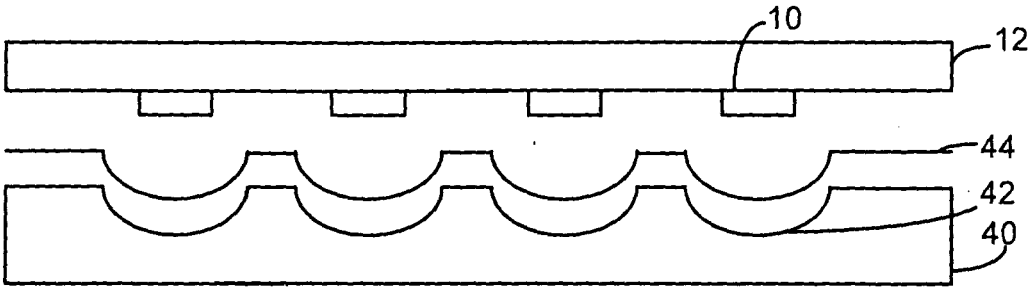

Fig. 6

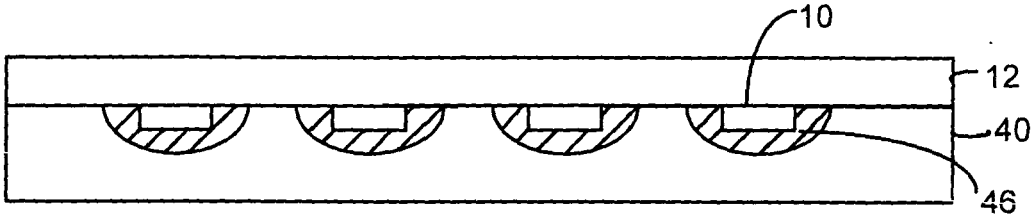

Fig. 7

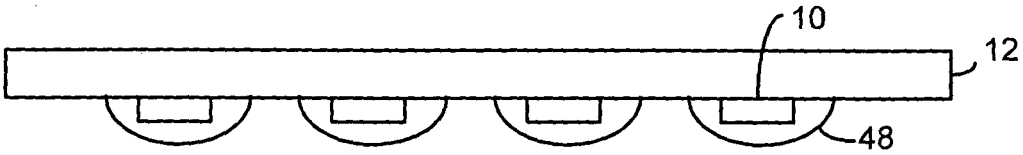

Fig. 8

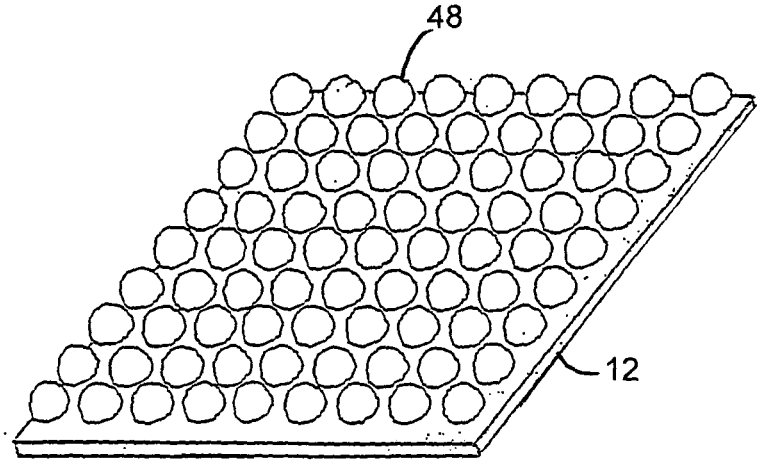

Fig. 9

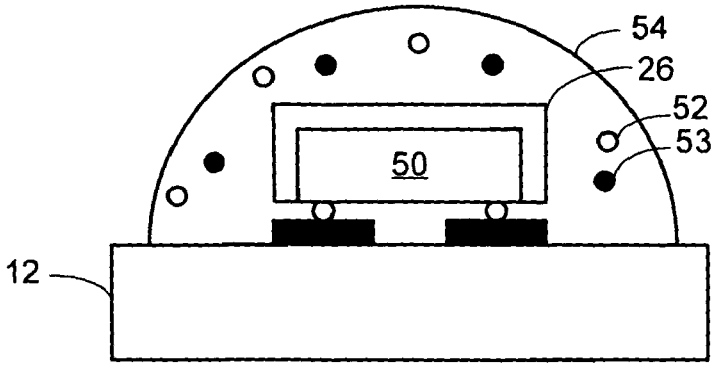

Fig. 10

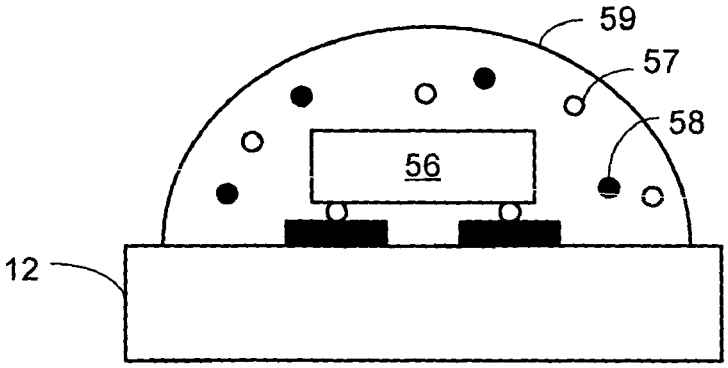

Fig. 11

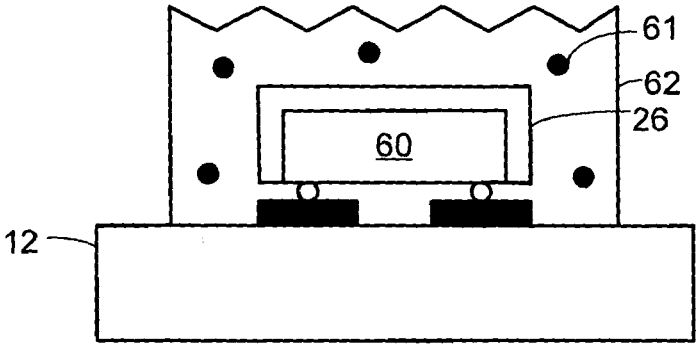

Fig. 12

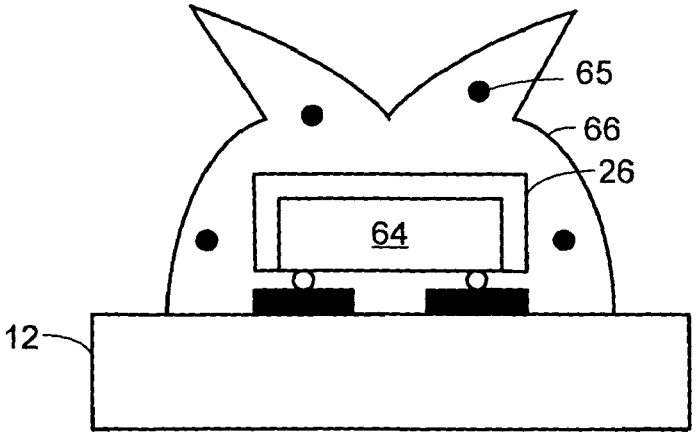

Fig. 13

COLOR CONVERTED LIGHT EMITTING DIODE

FIELD OF THE INVENTION

[0001] This invention relates to light emitting diodes (LEDs) and, in particular, to a technique for converting an LEDs light output to a white light.

BACKGROUND

[0002] LEDs emit light of a single color. It is common practice to create white light using a blue LED and irradiating one or more phosphors. The phosphor may add red and green components or may add a yellow-green component (e.g., a YAG phosphor). Such techniques include depositing the phosphor(s) in a reflective cup surrounding the blue LED, or mixing the phosphors in a bonding medium (e.g., silicone) and depositing the mixture on the blue LED.

[0003] Using a yellow-green phosphor with a blue LED produces a high temperature white light that is not visually pleasing and has poor color rendering. Adding a red phosphor makes the light warmer.

[0004] Providing the phosphors in a reflector cup surrounding the LED results in a relatively large light source. Further, the thickness of the phosphor/binder material in the cup varies, making it difficult to achieve a desired color temperature and uniform color. Further, the walls of the cup block the side-light, which limits the possible emission patterns. Other drawbacks exist.

[0005] When depositing two or more phosphors in conjunction, it is difficult to create a predictable and consistent light color, and the different phosphors may react differently during the same deposition process. For example, the relative phosphor thicknesses and densities are difficult to control, the light conversion of one phosphor has an effect on the light conversion of the other phosphor, and different phosphors typically have different physical properties (e.g., density differences and temperature coefficients of expansion) and chemical properties so do not react the same when undergoing the same deposition process.

[0006] What is needed is a technique for generating white light using phosphors and a blue, UV, or near UV LED that is relatively easy to implement and consistently produces the desired white light temperature. It is particularly desirable to generate a warm white light (more red) in the temperature range of 2000K-5000K.

SUMMARY

[0007] A technique for forming a white light LED is disclosed. In one embodiment, the LED die emits blue light. A first phosphor for producing red, yellow, or yellow-green light is deposited to conformably coat the LED die. One suitable deposition technique is electrophoretic deposition (EPD), which plates the die with a phosphor by applying a potential to the die and charging the phosphor in a solution. The attractive force evenly coats the die with the phosphor. The phosphor thickness and coverage is very controllable, so the effect of the phosphor coating is very predictable.

[0008] Over the resulting LED structure is deposited another phosphor in a binder to add the remaining color component (e.g., red or green) and to encapsulate the conformal phosphor coated die.

[0009] Because the two different deposition techniques are, separately, easily controllable to contribute the desired color component, since the phosphors' physical and chemical compatibility is not a factor, the resulting white light temperature (e.g., 2000K-5000K) is highly controllable and the emission color is uniform.

[0010] One use of the warm white light LEDs is in headlamps for automobiles.

[0011] In one embodiment, an array of blue LED dies is mounted on a submount, and each LED has a conformal coating of a first phosphor formed over it. Each LED is then surrounded by a photoresist mold, and liquid silicone infused with a second phosphor is deposited in the mold to form an encapsulant over each LED with well defined dimensions. The silicone is then cured, and the photoresist is removed. The LEDs are separated from one another by a conventional dicing step. The first phosphor may be yellow, yellow-green, or green (e.g., a YAG phosphor) and the second phosphor may be red (e.g., a CaS phosphor). In another embodiment, the first phosphor is red, and the second phosphor is yellow, yellow-green, or green.

[0012] In another embodiment, the silicone-phosphor material is deposited in an overmolding process, where LEDs conformably coated with phosphor in an array on a submount are placed over a mold containing liquid silicone mixed with phosphor powder. The shape of each mold is that of a lens. The silicone-phosphor material is then cured and the LED array and mold are separated. Each LED structure now includes the two phosphors and a silicone lens. The LEDs may then be separated from each other by a conventional dicing procedure.

BRIEF DESCRIPTION OF THE DRAWINGS

[0013] FIG. **1** is a side view of an array of blue LEDs, with conductive surfaces, mounted on a submount.

[0014] FIG. **2** illustrates the array of LEDs immersed in a solution containing charged phosphor particles for conformably coating the conductive surfaces of the LEDs with the phosphor.

[0015] FIG. **3** illustrates the resulting LEDs with the conformal coating of phosphor.

[0016] FIG. **4** illustrates a photoresist formed over the submount of FIG. **3** to form a mold for silicone infused with a second type of phosphor.

[0017] FIG. **5** illustrates the resulting silicone, containing phosphor particles, forming an encapsulating lens, prior to the photoresist being removed.

[0018] FIGS. **6**, **7**, and **8** illustrate an overmolding process used to form an encapsulating lens containing phosphor particles.

[0019] FIG. **9** is a perspective view of an array of LEDs that emit white light, formed using he processes described herein.

[0020] FIG. **10** is a side view of a blue, UV, or near UV LED with a conformal coating of one type of phosphor and a silicone lens containing one phosphor or two different phosphors to create white light.

[0021] FIG. **11** is a side view of a blue LED, without a conformal coating, having a silicone lens containing two different phosphors to create white light.

[0022] FIG. **12** is a side view of any of the above LEDs where the silicone lens, containing one or two types of phosphors, is formed as a Fresnel lens.

[0023] FIG. **13** is a side view of any of the above LEDs where the silicone lens, containing one or two types of phosphors, is formed as a wide angle emission lens.

DETAILED DESCRIPTION

[0024] As a preliminary matter, a conventional blue, UV, or near-UV LED is formed on a growth substrate. In the example used, the LED is a GaN-based LED, such as an AlInGaN LED. Typically, a relatively thick n-type GaN layer is grown on a sapphire or SiC growth substrate using conventional techniques. The relatively thick GaN layer typically includes a low temperature nucleation layer and one or more additional layers so as to provide a low-defect lattice structure for the n-type cladding layer and active layer. One or more n-type cladding layers are then formed over the thick n-type layer, followed by an active layer, one or more p-type cladding layers, and a p-type contact layer (for metallization).

[0025] Various techniques are used to gain electrical access to the n-layers. In a flip-chip example, portions of the p-layers and active layer are etched away to expose an n-layer for metallization. In this way the p contact and n contact are on the same side of the chip and can be directly electrically attached to the package (or submount) contact pads. Current from the n-metal contact initially flows laterally through the layer. In contrast, in a vertical injection (non-flip-chip) LED, an n-contact is formed on one side of the chip, and a p-contact is formed on the other side of the chip. Electrical contact to one of the p or n-contacts is typically made with a wire or a metal bridge, and the other contact is directly bonded to a package (or submount) contact pad. A flip-chip LED is used in the various examples for simplicity, although a vertical injection LED can also be used.

[0026] Optionally, a conductive substrate is bonded to the LED layers (typically to the p-layers) and the growth substrate is removed.

[0027] Examples of forming LEDs are described in U.S. Pat. Nos. 6,649,440 and 6,274,399, both assigned to Lumileds Lighting and incorporated by reference.

[0028] The n and p contacts of one or more LED dice may be bonded to respective contact pads on a submount. The submount may be silicon, ceramic, or any other suitable material. The submount has additional contact pads for being connected to a printed circuit board. Conductive vias in the submount may connect the LED pads to the printed circuit board pads. The submount may have a metal pattern that interconnects multiple LEDs together on the submount. The submount may contain additional circuitry, such as ESD protection. Multiple submounts may be bonded to a printed circuit board, which typically contains metal leads for interconnecting the LEDs and for connecting the LEDs to a power supply. The circuit board may interconnect various LEDs in series and/or parallel.

[0029] The above-described LED structures are just some examples of LED structures that can be used in the present invention.

[0030] FIG. **1** is a side view of two flip-chip LED dice **10** mounted on a support structure **12**. It is assumed the LEDs emit a blue light in the range of 420-490 nm. The support structure **12** may be a submount (e.g., ceramic or silicon with metal leads), a metal heat sink, a printed circuit board, or any other structure. In the present example, the support structure **12** is a ceramic submount with metal pads **14** connected to the n and p contact pads of the LED dice **10** by gold bumps **16** or by any other bonding means.

[0031] A photoresist **18** is deposited over the surface of the support structure **12** and removed (e.g., by lift off or etching) from the surfaces of the LED dice **10** where phosphor is to be deposited. An underfill **19** of another material may be present under each LED die **10**. The underfill provides heat transfer to the support structure **12** and protects the LED dice **10** from contamination.

[0032] Typically, the exposed surfaces of the LED dice **10** will be conductive n or p layers and electrically connected to metal leads on the support structure **12**. If the surfaces are not conductive, the LED dice **10** may be dipped in a solution of, for example, antimony tin oxide, and dried to provide a mildly conductive coating on the LED dice **10**.

[0033] FIG. **2** shows a tub containing a first phosphor powder in a solution **20**. The solution **20** may contain a binder material and/or a charging agent in addition to the phosphor particles. An exemplary solution **20** may include isopropyl alcohol and water as a solvent, aluminum nitride as a charging agent and binding agent, and a doped yttrium aluminum garnet compound as phosphor particles. In this example, the first phosphor for conformably coating the LED dice **10** will generate yellow or yellow-green light when energized by the blue light emitted by the LED dice **10**. Such phosphors for generating particular colors when energized by blue light are well known.

[0034] An electrode **22** in contact with the solution **20** is coupled to one terminal of a bias voltage source **24**, and the conductive surfaces of the LED dice **10** are coupled (via pads on the submount **12**) to the other terminal of the bias voltage source **24**. The electric field created by the bias voltage draws the phosphor particles out of the solution **20** and onto the charged conductive surfaces of the LED dice **10**.

[0035] At the time when the phosphor coating is of a sufficient thickness (empirically determined), the support structure **12** is removed from the solution **20** and dried. Any variation in the thickness of the phosphor is preferably less than about 15% of the average thickness of the phosphor and preferably less than 10% of the average thickness. The photoresist layer **18** is then removed by conventional wet (acetone) or dry (oxygen plasma) stripping.

[0036] FIG. **3** illustrates the resulting phosphor conformal layer **26** on the LED dice **10** surfaces.

[0037] As an alternative to forming the conformal coating by electrophoretic deposition, tenciling may also be used. Electrophoretic deposition and stenciling are further described n U.S. Pat. Nos. 6,576,488 and 6,642,652, by

William David Collins III et al., assigned to he present assignee and incorporated herein by reference.

[0038] Instead of depositing a conformal layer of yellow or yellow-green phosphor on the LED dice **10**, the conformal layer **26** may be a red phosphor (CaS:Eu), deposited using the same techniques. Such red phosphors that emit red light (e.g., 630-675 nm) when energized by a blue light are well known.

[0039] In one embodiment, the thickness of the conformal layer **26** is 15-35 microns; however, other thicknesses may also be suitable depending on the desired color temperature, the phosphors used, and the particular LEDs used.

[0040] Next, as shown in FIG. **4**, a layer of photoresist **28** is deposited and selectively removed around each LED die **10** to create a mold for forming a lens comprising silicone **30** infused with a second type of phosphor **32**. Silicone is particularly suitable for forming a lens since it is transparent and durable. However, other materials may also be suitable. If the conformal layer **26** is a yellow phosphor or yellow-green phosphor, the phosphor **32** should be a red phosphor to create a warm white light. Some blue light emitted by the LED die **10** leaks through the two phosphors and combines with the two phosphor colors to create white light. The red phosphor is energized by both the blue and green components. If the conformal layer **26** is a red phosphor, the phosphor **32** should be a green phosphor to create white light. Phosphors that emit green light (e.g., 520-570 nm) when energized by blue light are well known (e.g., YAG doped with Ce+3).

[0041] A precisely controlled drop of the liquid silicone-phosphor is shown being deposited into the mold. The viscosity of the droplet is set so that the convex meniscus forms the desired lens shape (see FIG. **5**). In one embodiment using a red phosphor **32**, there is a concentration of 0.3 gram of CaS:Eu for every 5 grams of silicone. The required concentration of any type of phosphor in silicone can be easily determined empirically. By varying the thickness of the conformal coating **26** of phosphor and the concentration of phosphor **32** in the silicone, the color temperature can be easily adjusted.

[0042] In another embodiment, the silicone infused with phosphor is deposited over the entire surface, and the structure is spun to remove the silicone outside of the mold.

[0043] FIG. **5** shows the resulting lens **34**. Additional lenses may be formed over the lens **34** for further affecting the light emission pattern. The silicone is then cured. The LED die **10** is now encapsulated or substantially encapsulated by the silicone. The bottom surface of the LED die **10** may be protected by an underfill, so it is not necessary that the silicone completely surround the LED die **10** for sufficient encapsulation. In one embodiment, the total thickness of the conformal layer **26** and lens **34** is about 75 microns or greater.

[0044] The photoresist **28** is then removed.

[0045] FIGS. **6-8** illustrate another technique for encapsulating the LED dice **10** with a silicone-phosphor lens. Each LED die has a conformal layer of phosphor prior to encapsulation, as previously described.

[0046] In FIG. **6**, a mold **40** has indentations **42** corresponding to the desired shape of a lens over each LED die **10**. The mold **40** is preferably formed of a metal. A very thin non-stick film **44**, having the general shape of the mold **40**, is placed over the mold **40**. The film **44** is of a well known conventional material that prevents the sticking of silicone to metal. Film **44** is not needed if the lens material does not stick to the mold This may be accomplished by using a non-stick mold coating, using a non-stick mold material, or using a mold process that results in a non-stick interface. Such processes may involve selecting certain process temperatures to obtain the minimum stick. By not using the film **44**, more complex lenses can be formed.

[0047] In FIG. **7**, the mold indentions **42** have been filled with a heat-curable or UV-curable liquid lens material **46** infused with a phosphor. Such phosphor has been previously described with respect to FIG. **4**. The lens material **46** may be any suitable optically transparent material such as silicone, an epoxy, or a hybrid silicone/epoxy. A hybrid may be used to achieve a matching coefficient of thermal expansion (CTE). Silicone and epoxy have a sufficiently high index of refraction (greater than 1.4) to greatly improve the light extraction from an AlInGaN LED as well as act as a lens. One type of silicone has an index of refraction of 1.76.

[0048] A vacuum seal is created between the periphery of the support structure **12** and the mold **40**, and the two pieces are pressed against each other so that each LED die **10** is inserted into the liquid lens material **46** and the lens material **46** is under compression.

[0049] The mold **40** is then heated to about 150 degrees centigrade (or other suitable temperature) for a time to harden the lens material **46**.

[0050] The support structure **12** is then separated from the mold **40**. The film **44** causes the resulting hardened lens to be easily released from the mold **40**. The film **44** is then removed.

[0051] In another embodiment, the LED dice **10** in FIG. **6** may be first covered with a layer of silicone (or another binder) infused with phosphor, and the silicone is then cured. The mold indentations **42** are filled with silicone or another material. When the LED dice **10** are then placed in the mold, the mold material is shaped over the covering material to form a lens. This technique may be used if the cover layer is not to be used as a lens.

[0052] FIG. **8** illustrates the resulting structure with a molded lens **48** over each LED die **10**.

[0053] In one embodiment, the molded lens is between 1 mm and 5 mm in diameter. The lens **48** may be any size or shape. The resulting LEDs emit white light by the combination of the blue light and the light emitted by the two phosphors.

[0054] One or more additional lenses may be formed over the conformal layer **26** and the first silicone-phosphor coating by any of the above methods. The one ore more additional lenses may contain another type of phosphor, such as for emitting orange light, to create a more pleasing light.

[0055] FIG. **9** is a perspective view of a resulting structure where the support structure **12** supports an array of LED dice, each having a silicone-phosphor lens **48** formed using any of the processes described herein. Each LED (with its underlying submount portion) can be separated by sawing or

breaking the submount **12** to form individual LED dice. Alternatively, the support structure **12** may be diced to support subgroups of LEDs or may be used without being diced.

[**0056**] The lens **48** infused with the phosphor not only affects the overall color but improves the light extraction from the LED die, refracts the light to create a desired emission pattern, and encapsulates the LED die to protect the die from contaminants, add mechanical strength, and protect any wire bonds.

[**0057**] The submounts may be mounted on a circuit board. The circuit board may be a metal plate (e.g., aluminum) with metal leads overlying an insulating layer.

[**0058**] The LED die **10** may also be a non-flip-chip die, with a wire connecting the top n or p-layers to a metal pad on the submount. The lens **48** may encapsulate the wire.

[**0059**] In one embodiment, the circuit board itself may be the support structure **12**.

[**0060**] FIGS. **10-13** illustrate variations of the embodiments described above. These variations may be formed using any of the techniques described above.

[**0061**] FIG. **10** illustrates an LED die **50** with a conformal layer **26** of phosphor, where two different phosphors **52**, **53** are mixed in the encapsulant material **54** (e.g., silicone). For example, the LED die **50** may emit a UV or near-UV light, the conformal layer **26** may convert some of that light to red, and the phosphors **52**, **53** convert the LED light that leaks through to blue and green, respectively. Alternatively, the conformal layer **26** can be any of the three color phosphors, and the phosphors **52**, **53** can be the remaining phosphors. More than two types of phosphors can be included in material **54** to create a desired white light temperature and broader spectrum of color.

[**0062**] FIG. **11** illustrates a blue LED **56** without a conformal layer of phosphor. Red and green phosphors **57**, **58** are infused in the encapsulant **59** to create white light.

[**0063**] FIG. **12** illustrates an LED die **60** with a conformal layer **26** of phosphor and one or more phosphors **61** infused in the lens **62**, where the lens **62** is molded as a Fresnel lens.

[**0064**] Lens **62** may also be a second lens overmolded on a first lens.

[**0065**] FIG. **13** illustrates an LED die **64** with a conformal layer **26** of phosphor and one or more phosphors **65** infused in the lens **66**, where the lens **66** is molded as a wide emitting lens. Lens **66** may also be a second lens overmolded on a first lens. Such a shape is possible using the technique of FIGS. &**8** if the lens material is sufficiently soft when removing the lens from the mold.

[**0066**] In another embodiment, two conformal layers of phosphors are deposited by successive electrophoresis processes, where one layer is YAG (yellow, yellow-green, or green, depending on the dopant) and the other layer is CaS (red). A silicone lens then encapsulates the LED die.

[**0067**] Any of the LED dice described herein can emit blue, UV, or near-UV light. The phosphors will typically be used to create white light with a color temperature range of 2000K-5000K.

[**0068**] Some uses of the white light LEDs described herein include headlights for automobiles, flashlights, light for interior illumination, camera flashes, and backlights for liquid crystal displays.

[**0069**] While particular embodiments of the present invention have been shown and described, it will be obvious to those skilled in the art that changes and modifications may be made without departing from this invention in its broader aspects and, therefore, the appended claims are to encompass within their scope all such changes and modifications as fall within the true spirit and scope of this invention.

What is claimed is:

1. A light emitting diode (LED) structure comprising:

an LED die that emits a light having a blue or shorter wavelength;

a first phosphor for converting the LED light to a first color component of white light, the first phosphor conformably coating the LED die on a plurality of surfaces, wherein an outer surface of the first phosphor coating substantially conforms to the plurality of surfaces of the LED die; and

a second phosphor in a transparent binder substantially encapsulating the LED die having the conformal coating, the combination of the light emitted from the LED die and at least the first and second phosphors creating a white light.

2. The structure of claim 1 wherein light emitted from the LED die is blue within the range of 420-490nm.

3. The structure of claim 1 wherein the white light has a color temperature in the range of 2000K-5000K.

4. The structure of claim 1 wherein the first phosphor produces a yellow or yellow-green light when energized by the LED light, and the second phosphor produces a red light when energized by the LED light.

5. The structure of claim 1 wherein the first phosphor produces a red light when energized by the LED light, and the second phosphor produces a yellow-green or green light when energized by the LED light.

6. The structure of claim 1 wherein the first phosphor produces a green light when energized by the LED light, and the second phosphor produces a red light when energized by the LED light.

7. The structure of claim 1 further comprising a third phosphor mixed with the second phosphor in the binder for producing white light from the combination of at least the first phosphor, the second phosphor, and the third phosphor.

8. The structure of claim 1 wherein the first phosphor and the second phosphor are the only phosphors used to create the white light.

9. The structure of claim 1 wherein the first phosphor is deposited by electrophoresis.

10. The structure of claim 1 wherein the first phosphor is a YAG phosphor and the second phosphor is a CaS phosphor.

11. The structure of claim 1 wherein the first phosphor is a CaS phosphor and the second phosphor is a YAG phosphor.

12. The structure of claim 1 wherein the transparent binder is silicone.

13. The structure of claim 1 wherein a thickness of the conformal coating is in the range of 15-35 microns.

14. The structure of claim 1 wherein any variation in the thickness of the conformal coating of first phosphor is less than about 15% of an average thickness of the first phosphor.

15. The structure of claim 1 wherein the transparent binder forms a lens to achieve a desired white light emission pattern.

16. The structure of claim 15 wherein the lens comprises a Fresnel lens.

17. A method for producing a light emitting diode (LED) structure comprising:

providing an LED die that emits a light having a blue or shorter wavelength;

conformably coating the LED die on a plurality of surfaces with a first phosphor for converting the LED light to a first color component of white light, wherein an outer surface of the first phosphor coating substantially conforms to the plurality of surfaces of the LED die; and

substantially encapsulating the LED die having the conformal coating with a second phosphor in a transparent binder, the combination of the light emitted from the LED die and at least the first and second phosphors creating a white light.

18. The method of claim 17 wherein conformably coating the LED die comprises performing an electrophoresis deposition process to plate the LED die with the first phosphor.

19. The method of claim 17 wherein substantially encapsulating the LED die comprises:

forming a photoresist mold around the LED die with the conformal coating;

depositing the second phosphor in a transparent binder in the mold;

curing the binder; and

removing the photoresist.

20. The method of claim 17 wherein substantially encapsulating the LED die comprises:

providing the second phosphor in a transparent binder in a mold;

inserting the LED die with the conformal coating into the mold;

curing the binder; and

removing the LED die from the mold.

* * * * *