US 20100124243A1

(19) United States

(12) Patent Application Publication

Hussell et al.

(10) Pub. No.: US 2010/0124243 A1

(43) Pub. Date: May 20, 2010

(54) **SEMICONDUCTOR LIGHT EMITTING APPARATUS INCLUDING ELONGATED HOLLOW WAVELENGTH CONVERSION TUBES AND METHODS OF ASSEMBLING SAME**

(75) Inventors: **Christopher P. Hussell**, Cary, NC (US); **John Adam Edmond**, Durham, NC (US)

Correspondence Address:
MYERS BIGEL SIBLEY & SAJOVEC, P.A.
P.O. BOX 37428
RALEIGH, NC 27627 (US)

(73) Assignee: **Cree, Inc.**

(21) Appl. No.: **12/273,216**

(22) Filed: **Nov. 18, 2008**

Publication Classification

(51) **Int. Cl.**
H01S 5/02 (2006.01)
H01L 23/00 (2006.01)

(52) **U.S. Cl.** **372/45.01**; 438/27; 257/E23.001

(57) **ABSTRACT**

A semiconductor light emitting apparatus includes an elongated hollow wavelength conversion tube that includes an elongated wavelength conversion tube wall having wavelength conversion material, such as phosphor, dispersed therein. A semiconductor light emitting device is oriented to emit light inside the elongated hollow wavelength conversion tube to impinge upon the elongated wavelength conversion tube wall and the wavelength conversion material dispersed therein. The elongated hollow wavelength conversion tube may have an open end, a crimped end, a reflective end, and/or other configurations. Multiples tubes and/or multiple semiconductor light emitting devices may also be used in various configurations. Related assembling methods are also described.

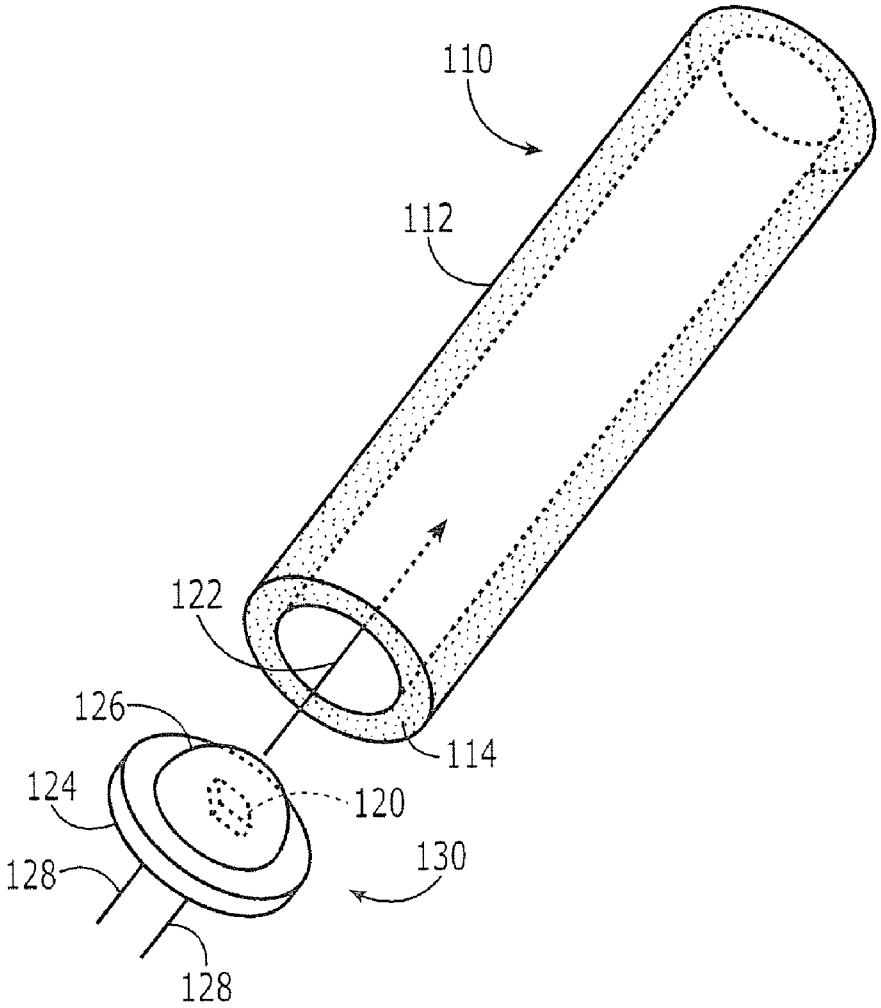

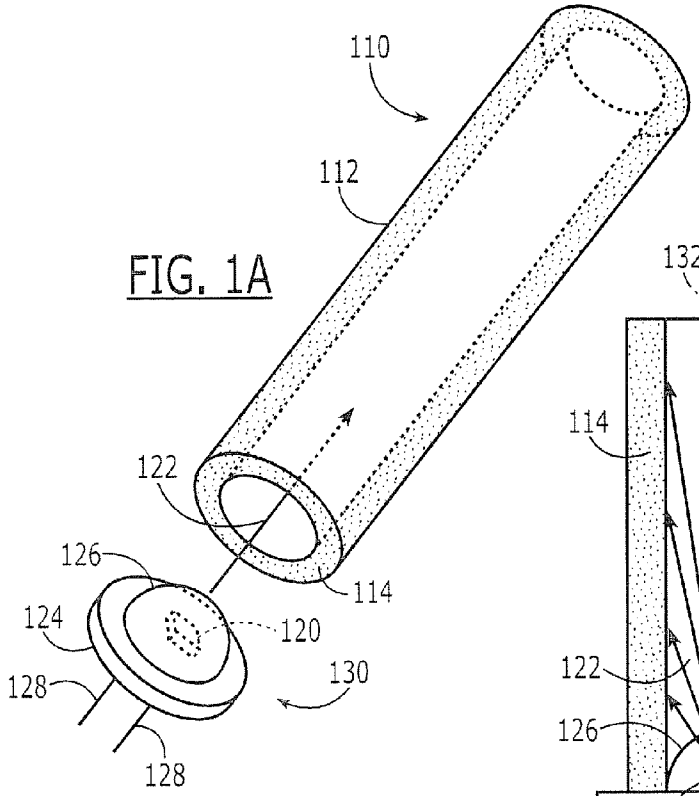

FIG. 1A

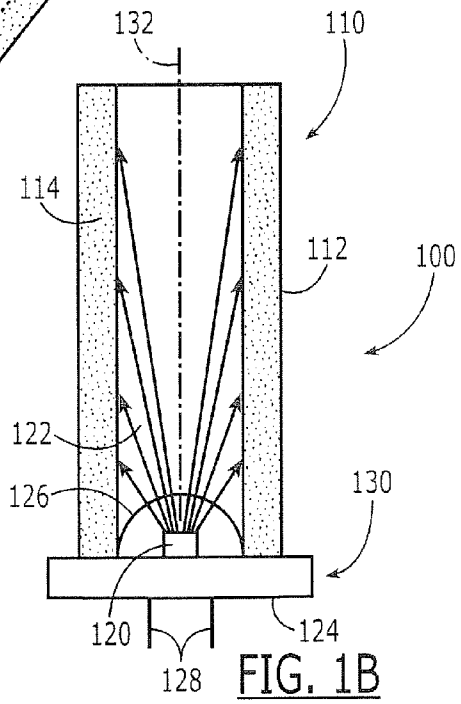

FIG. 1B

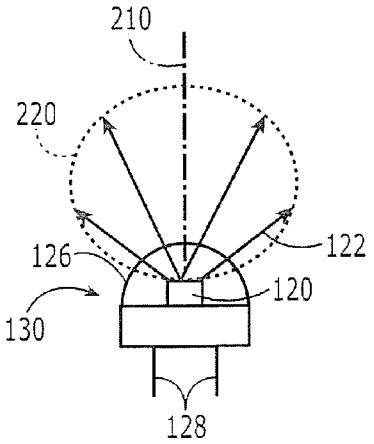

FIG. 2A

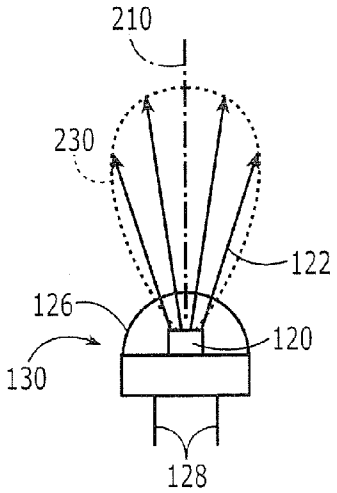

FIG. 2B

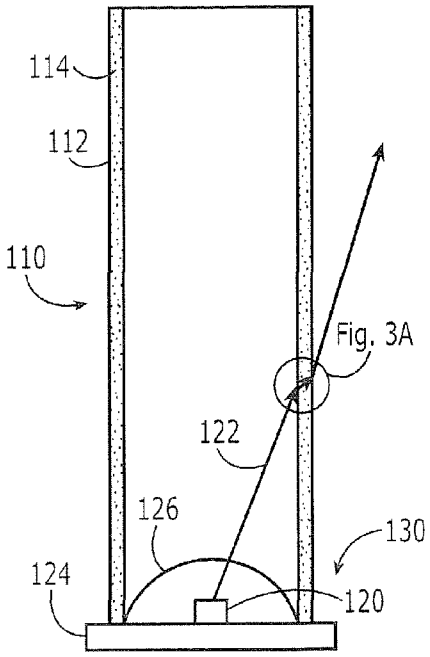

FIG. 3

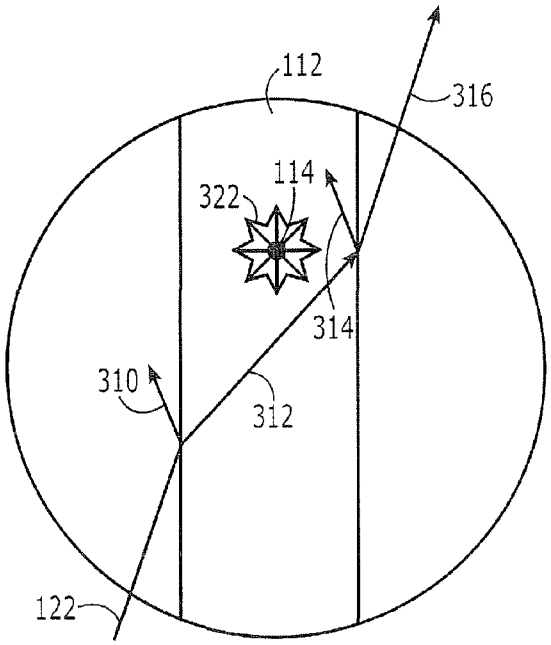

FIG. 3A

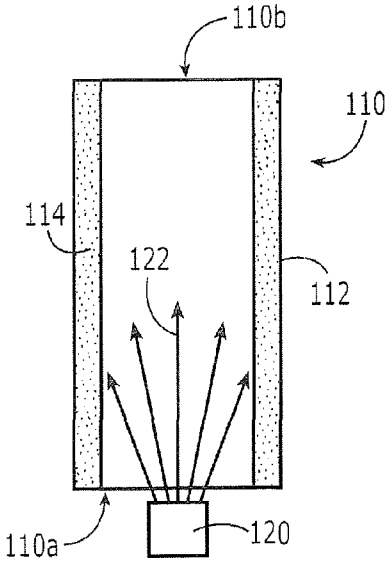

FIG. 4

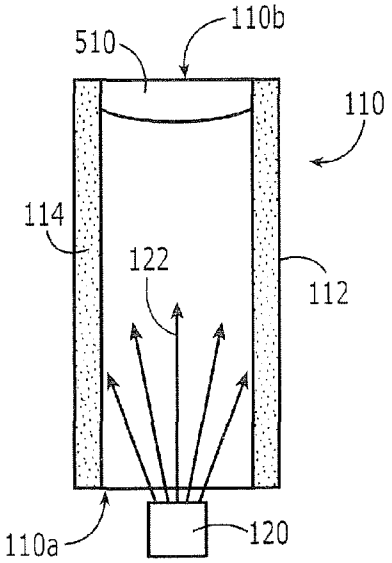

FIG. 5

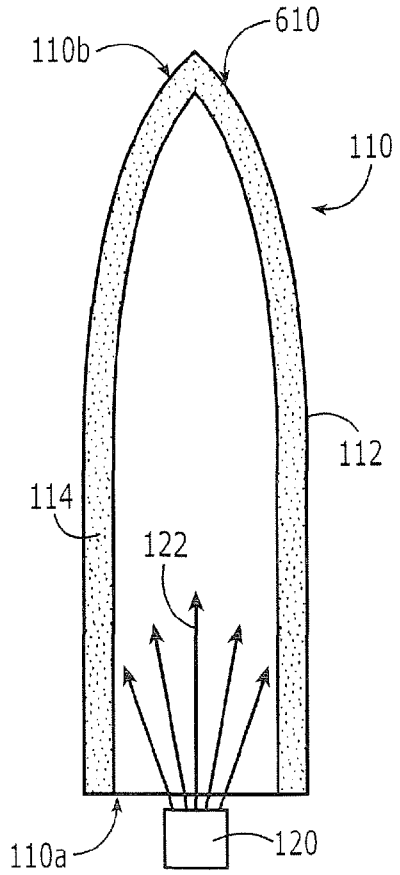
610
110b
110
112
114
122
110a
120

FIG. 6

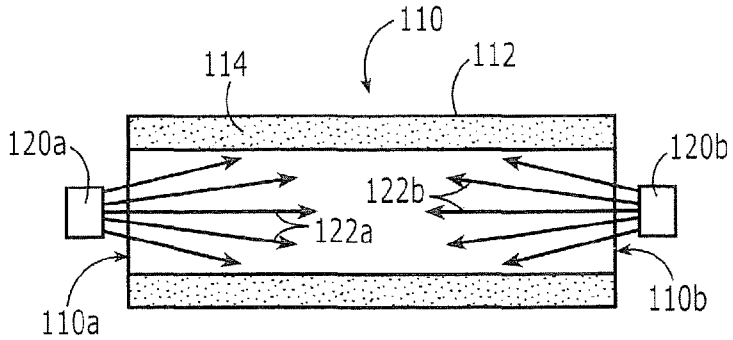
110
114
112
120a
120b
122b
122a
110a
110b

FIG. 7

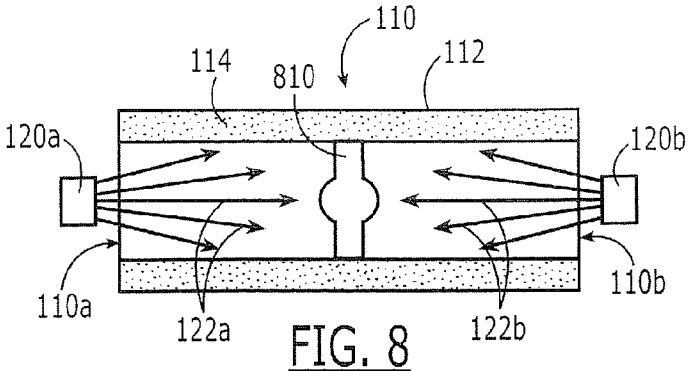

FIG. 8

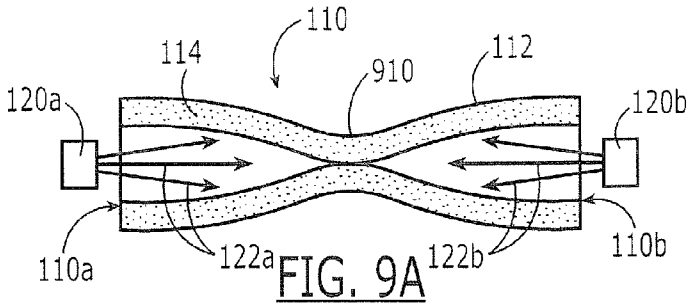

FIG. 9A

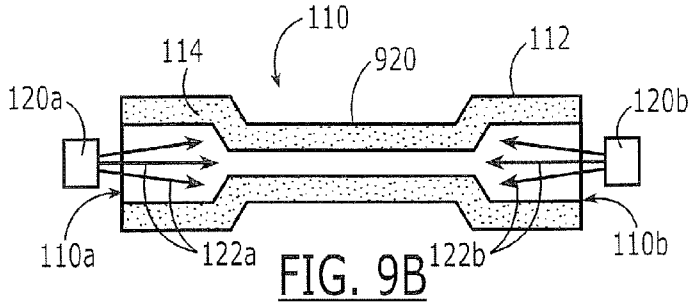

FIG. 9B

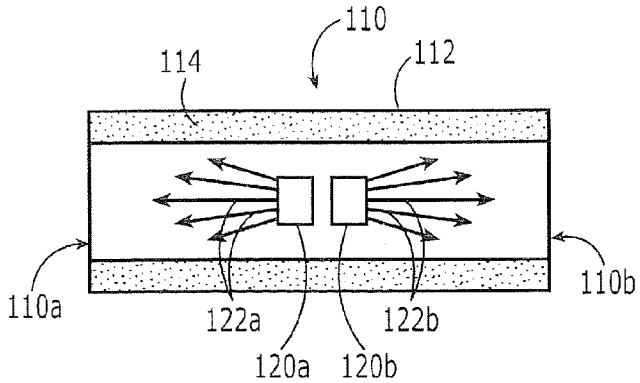

FIG. 10

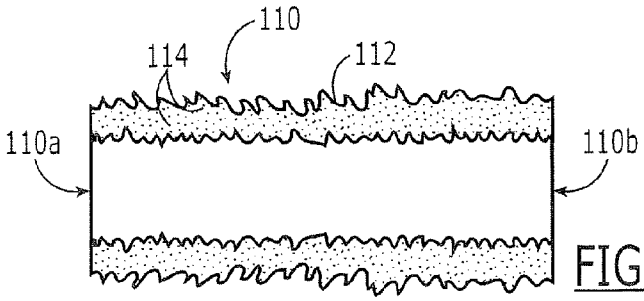

FIG. 11

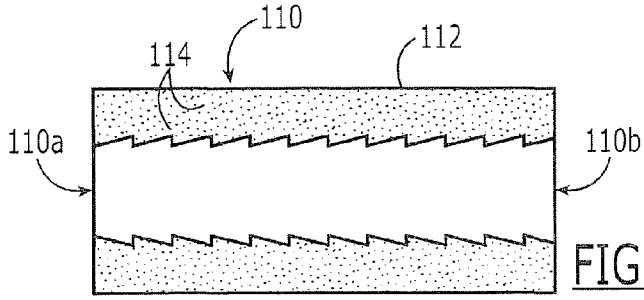

FIG. 11B

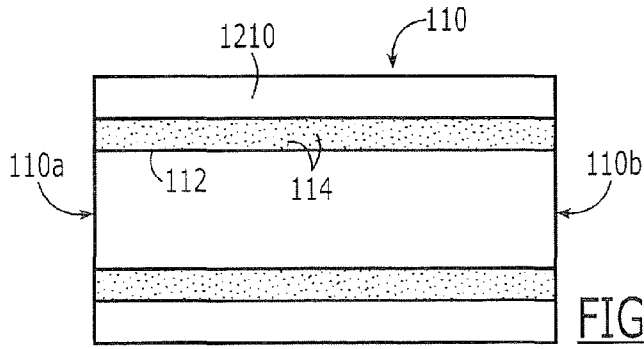

FIG. 12

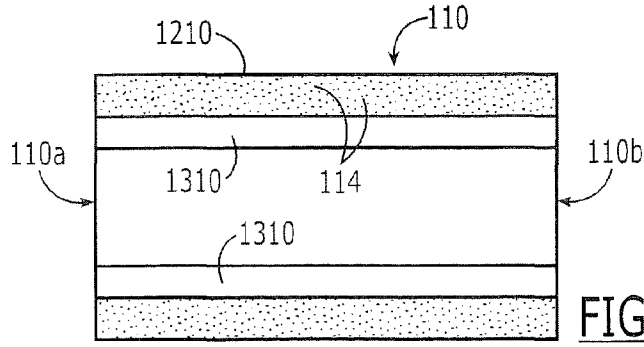

FIG. 13

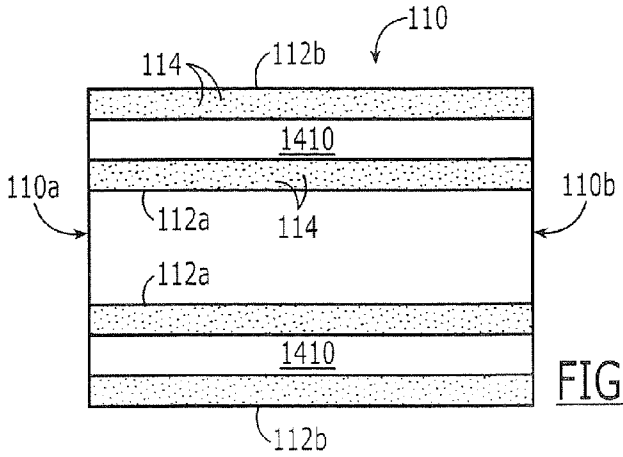

FIG. 14

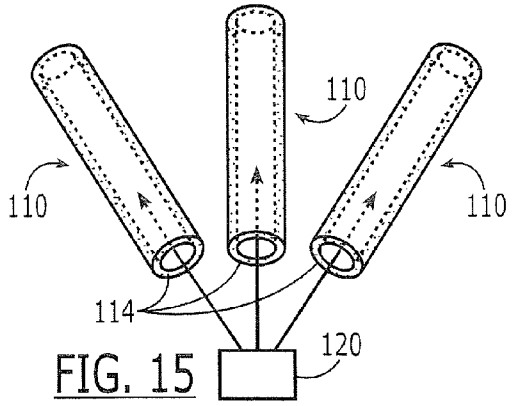

FIG. 15

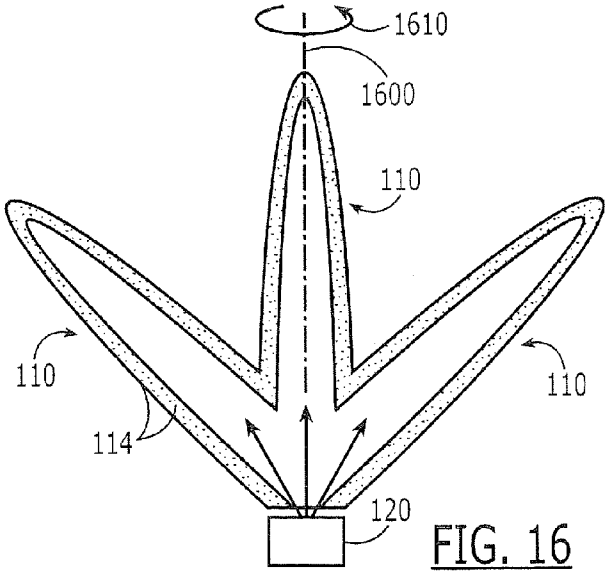

FIG. 16

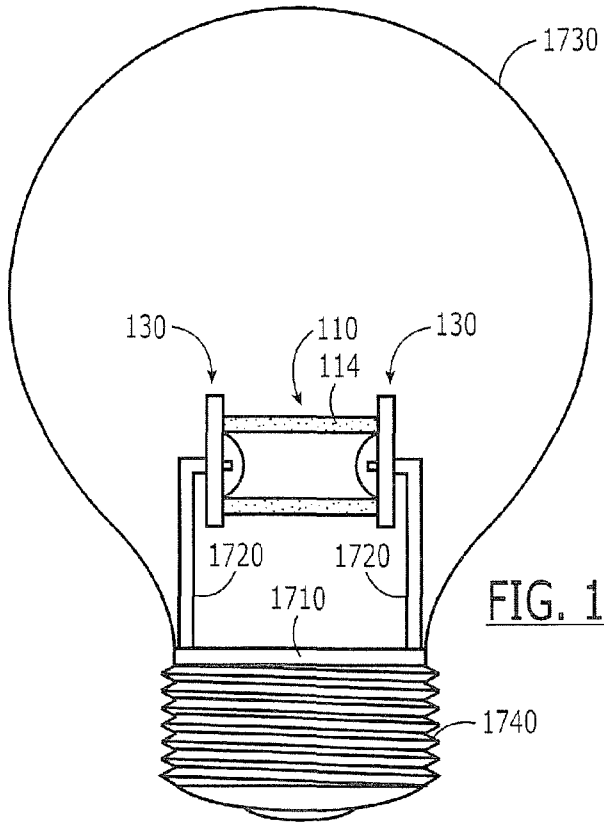
1730
130
110
114
130
1720
1720
1710
1740

FIG. 17

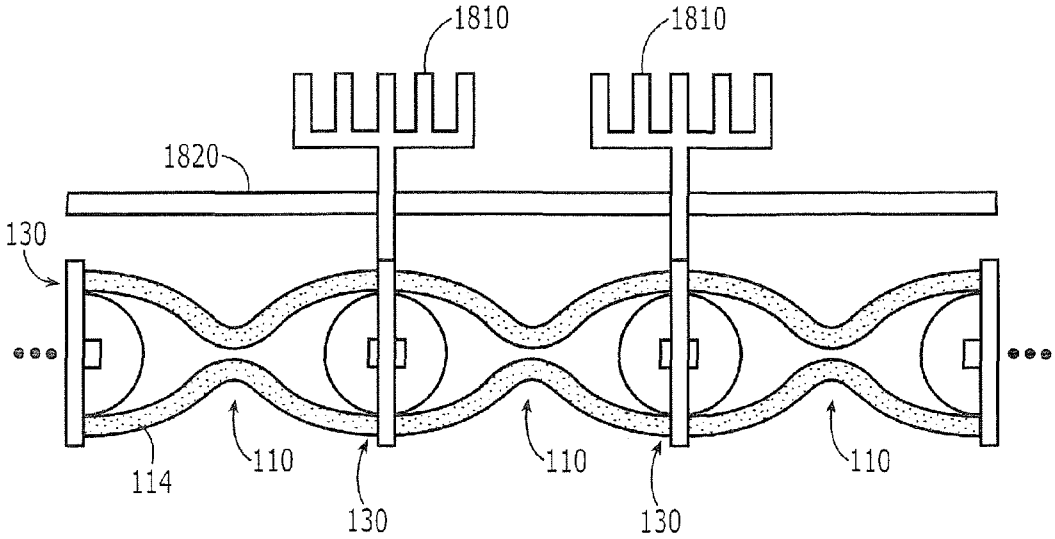
1810
1810
1820
130
114
110
130
110
130
110

FIG. 18

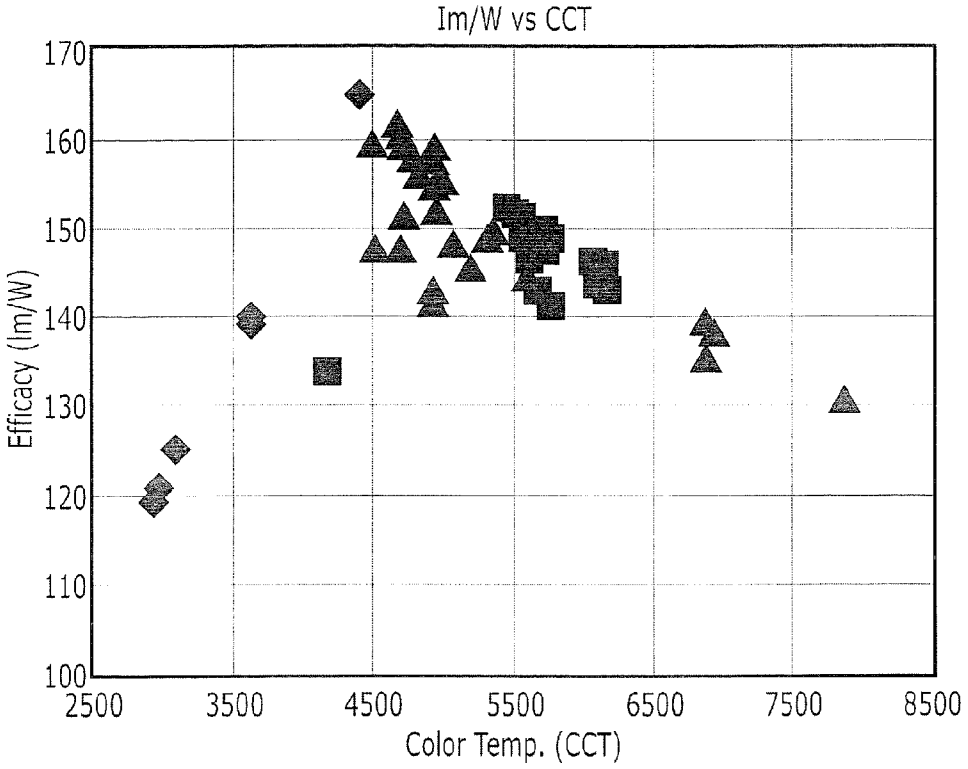
Im/W vs CCT
170
160
150
140
130
120
110
100
Efficacy (lm/W)
2500
3500
4500
5500
6500
7500
8500
Color Temp. (CCT)

FIG. 19

SEMICONDUCTOR LIGHT EMITTING APPARATUS INCLUDING ELONGATED HOLLOW WAVELENGTH CONVERSION TUBES AND METHODS OF ASSEMBLING SAME

BACKGROUND OF THE INVENTION

[0001] This invention relates to light emitting apparatus and methods of assembling and operating same, and more particularly to semiconductor light emitting apparatus and methods of assembling and operating same.

[0002] Semiconductor light emitting devices ("LEDs"), such as light emitting diodes and laser diodes, are widely known solid-state lighting elements that are capable of generating light upon application of voltage thereto. Light emitting devices generally include a p-n junction, an anode ohmic contact for the p-type region of the device, and a cathode ohmic contact for the n-type region of the device. The device may be formed on a substrate, such as a sapphire, silicon, silicon carbide, gallium arsenide, gallium nitride, etc., substrate, or the device may not include a substrate. The semiconductor p-n junction may be fabricated, for example, from silicon carbide, gallium nitride, gallium phosphide, aluminum nitride and/or gallium arsenide-based materials and/or from organic semiconductor-based materials.

[0003] Semiconductor LEDs may be used in lighting/illumination applications, for example, as a replacement for conventional incandescent and/or fluorescent lighting. As such, it is often desirable to provide a lighting source that generates white light having a relatively high color rendering index (CRI), so that objects illuminated by the lighting may appear more natural. The color rendering index of a light source is an objective measure of the ability of the light generated by the source to accurately illuminate a broad range of colors. The color rendering index ranges from essentially zero for monochromatic sources to nearly 100 for incandescent sources.

[0004] In addition, the chromaticity of a particular light source may be referred to as the "color point" of the source. For a white light source, the chromaticity may be referred to as the "white point" of the source. The white point of a white light source may fall along a locus of chromaticity points corresponding to the color of light emitted by a black-body radiator heated to a given temperature. Accordingly, a white point may be identified by a correlated color temperature (CCT) of the light source, which is the temperature at which the heated black-body radiator matches the color or hue of the white light source. White light typically has a CCT of between about 4000 and 8000K. White light with a CCT of 4000 has a yellowish color. White light with a CCT of 8000K is more bluish in color, and may be referred to as "cool white". "Warm white" may be used to describe white light with a CCT of between about 2600K and 3500K, which is more reddish in color.

[0005] In order to produce white light, multiple LEDs emitting light of different colors of light may be used. The light emitted by the LEDs may be combined to produce a desired intensity and/or color of white light. For example, when red-, green- and blue-emitting LEDs are energized simultaneously, the resulting combined light may appear white, or nearly white, depending on the relative intensities of the component red, green and blue sources. However, in LED lamps including red, green, and blue LEDs, the spectral power distributions of the component LEDs may be relatively narrow (e.g. about 10-30 nm lull width at half maximum (FWHM)). While it may be possible to achieve fairly high luminous efficacy and/or color rendering with such lamps, wavelength ranges may exist in which it may be difficult to obtain high efficiency (e.g., approximately 550 nm).

[0006] Alternatively, the light from a single-color LED may be converted to white light by surrounding the LED with a wavelength conversion material, such as phosphor particles. The term "wavelength conversion material" is used herein to refer to any material that absorbs light at one wavelength and re-emits light at a different wavelength, regardless of the delay between absorption and re-emission and regardless of the wavelengths involved. Accordingly, the term "wavelength conversion material" may be used herein to refer to materials that are sometimes called fluorescent and/or phosphorescent and often referred to as "phosphors". In general, phosphors absorb light having shorter wavelengths and re-emit light having longer wavelengths. As such, some or all of the light emitted by the LED at a first wavelength may be absorbed by the phosphor particles, which may responsively emit light at a second wavelength. For example, a blue emitting LED may be surrounded by a yellow phosphor, such as cerium-doped yttrium aluminum garnet (YAG). The resulting light, which is a combination of blue light and yellow light, may appear white to an observer.

[0007] Accordingly, efforts have been made to integrate a semiconductor light emitting device with wavelength conversion material to provide a semiconductor light emitting apparatus. The wavelength conversion material may be coated on the LED itself, may be provided in a drop of material between the semiconductor LED and the dome of an LED (also referred to as a shell or lens) and/or may be provided remote from the semiconductor LED by providing wavelength conversion material inside, outside and/or within the dome of an LED and/or on/within another surface remote from the LED.

SUMMARY OF THE INVENTION

[0008] Semiconductor light emitting apparatus according to various embodiments of the present invention include an elongated hollow wavelength conversion tube that comprises an elongated wavelength conversion tube wall having wavelength conversion material such as phosphor dispersed therein uniformly or non-uniformly. The tube need not be cylindrical. A semiconductor light emitting device is oriented to emit light inside the elongated hollow wavelength conversion tube to impinge upon the elongated wavelength conversion tube wall and the wavelength conversion material dispersed therein.

[0009] In some embodiments, the semiconductor light emitting device is oriented such that at least 20% of the emitted light strikes the elongated hollow wavelength conversion tube wall at an oblique angle. In other embodiments, the semiconductor light emitting device is oriented such that at least about 90% of the emitted light strikes the elongated hollow wavelength conversion tube at an oblique angle. In some embodiments, the semiconductor light emitting device is confined to emit light in a Lambertian pattern about an emission axis. In other embodiments, the semiconductor light emitting device is configured to emit light in a non-Lambertian pattern, such as a focused pattern.

[0010] Various other embodiments of the invention can provide an elongated hollow wavelength conversion tube that is oriented relative to the semiconductor light emitting device, so as to provide a longer path length through the elongated wavelength conversion tube wall for light that is emitted by

the semiconductor light emitting device that does not strike the wavelength conversion material embedded therein without increasing the path length of light that is converted by striking the wavelength conversion material embedded therein. In some embodiments, the semiconductor light emitting device is a blue light emitting diode having an area of about 1 mm^2, and the apparatus produces about 160 lumens per watt at a color temperature of about 4700K. In other embodiments, the apparatus produces about 150 lumens per watt at a color temperature of about 5500K.

[0011] The elongated hollow wavelength conversion tube may itself have various configurations according to various embodiments. In some embodiments, the elongated hollow wavelength conversion tube includes inner and outer surfaces, and a supporting layer is provided on the inner surface and/or on the outer surface. In other embodiments, the inner and/or outer surfaces are textured uniformly or non-uniformly. In some embodiments, the tube wall defines a tube axis, and the semiconductor light emitting device is configured to emit light symmetrically about an emission axis. The semiconductor light emitting device is oriented such that the emission axis is coincident with the tube axis.

[0012] Various other configurations of elongated hollow wavelength conversion tubes may be provided. For example, in some embodiments, the elongated hollow wavelength conversion tube includes first and second opposing ends, and the semiconductor light emitting device is adjacent the first end. In some embodiments, the second end is a closed end, whereas in other embodiments the second end is a crimped second end. In still other embodiments, a cap is provided at the second end, and in yet other embodiments, the cap may comprise a wavelength conversion material and/or a reflective material.

[0013] In still other embodiments, multiple semiconductor light emitting devices may be provided. For example, in some embodiments, a second semiconductor light emitting device is provided adjacent the second end that is oriented to emit light inside the elongated hollow wavelength conversion tube. In some of these embodiments, a double-sided reflector may be provided in the elongated hollow wavelength conversion tube between the first and second semiconductor light emitting devices. In other embodiments, the elongated hollow wavelength conversion tube may be crimped between the first and second semiconductor light emitting devices.

[0014] In still other embodiments, the semiconductor light emitting device extends at least partially into the elongated hollow wavelength conversion tube. In some of these embodiments, the semiconductor light emitting device extends partially into the wavelength conversion tube to emit light towards a first end thereof. In still other embodiments, a second semiconductor light emitting device may extend at least partially into the elongated hollow wavelength conversion tube to emit light towards a second end thereof. In yet other embodiments, the first and second semiconductor light emitting devices may be oriented in back-to-back relation within the elongated hollow wavelength conversion tube. In still other embodiments, a screw-type base may be provided as well as a pair of standoffs that maintain the elongated hollow wavelength conversion tube and the first and second semiconductor light emitting devices spaced apart from the screw-type base. A bulb may also be provided that is connected to the screw-type base and surrounds the hollow wavelength conversion tube and the first and second semiconductor light emitting devices.

[0015] Apparatus according to various embodiments of the present invention may also include a mounting substrate and a dome on the mounting substrate, with the semiconductor light emitting device being located between the mounting substrate and the dome. The dome may extend at least partially into an end of the elongated hollow wavelength conversion tube, and the mounting substrate may extend at least partially outside the elongated hollow wavelength conversion tube.

[0016] Multi-tube embodiments also may be provided. For example, in some embodiments, the apparatus further comprises a second elongated hollow wavelength conversion tube, and the first and second elongated hollow wavelength conversion tube share a common end. The semiconductor light emitting device is adjacent the common end. In other embodiments, a plurality of elongated hollow wavelength conversion tubes may share the common end and extend around a central axis. In yet other embodiments, a second elongated hollow wavelength conversion tube is provided that is coaxial to a first elongated hollow wavelength conversion tube.

[0017] Semiconductor light emitting apparatus according to still other embodiments of the present invention may comprise a plurality of light emitting filaments. A respective light emitting filament comprises an elongated hollow wavelength conversion tube that includes an elongated wavelength conversion tube wall having wavelength conversion material dispersed therein, and a semiconductor light emitting device that is oriented to emit light inside the elongated hollow wavelength conversion tube. The plurality of light emitting filaments may be oriented end-to-end in a linear array, in some embodiments. In other embodiments, the plurality of light emitting filaments may extend about a common origin in a three-dimensional array. The elongated hollow wavelength conversion tube(s) and the semiconductor light emitting device(s) may be provided according to any of the embodiments described herein.

[0018] Methods of assembling semiconductor light emitting apparatus may also be provided. In these methods, a dome that surrounds a semiconductor light emitting device that is on a substrate is inserted at least partially into an end of an elongated hollow wavelength conversion tube having wavelength conversion material dispersed therein. The elongated hollow wavelength conversion tube may be crimped remote from the end. The semiconductor light emitting device and the elongated hollow wavelength conversion tube may be configured according to any of the embodiments described herein.

BRIEF DESCRIPTION OF THE DRAWINGS

[0019] FIG. **1**A a perspective view of a semiconductor light emitting apparatus according to various embodiments.

[0020] FIG. **1**B is a cross-sectional view of a semiconductor light emitting apparatus according to other embodiments.

[0021] FIGS. **2**A and **2**B are cross-sectional views of packaged semiconductor light emitting devices.

[0022] FIGS. **3-10** are cross-sectional views of semiconductor light emitting apparatus according to various other embodiments.

[0023] FIGS. **11A-14** are cross-sectional views of elongated hollow wavelength conversion tubes according to various embodiments.

[0024] FIGS. **15-18** are cross-sectional views of semiconductor light emitting apparatus according to still other embodiments.

[0025] FIG. **19** graphically illustrates efficiency in lumens per watt as a function of CCT for semiconductor light emitting apparatus according to various embodiments.

DETAILED DESCRIPTION

[0026] The present invention now will be described more fully with reference to the accompanying drawings, in which various embodiments are shown. This invention may, however, be embodied in many different forms and should not be construed as limited to the embodiments set forth herein. Rather, these embodiments are provided so that this disclosure will be thorough and complete, and will fully convey the scope of the invention to those skilled in the art. In the drawings, the size and relative sizes of layers and regions may be exaggerated for clarity. Like numbers refer to like elements throughout.

[0027] The terminology used herein is for the purpose of describing particular embodiments only and is not intended to be limiting of the present invention. As used herein, the singular forms "a," "an" and "the" are intended to include the plural forms as well, unless the context clearly indicates otherwise. It will be further understood that the terms "comprising", "including", "having" and variants thereof, when used in this specification, specify the presence of stated features, steps, operations, elements, and/or components, but do not preclude the presence or addition of one or more other features, steps, operations, elements, components, and/or groups thereof. In contrast, the term "consisting of" when used in this specification, specifies the stated features, steps, operations, elements, and/or components, and precludes additional features, steps, operations, elements and/or components.

[0028] It will be understood that when an element such as a layer, region or substrate is referred to as being "on" another element, it can be directly on the other element or intervening elements may also be present. Furthermore, relative terms such as "beneath" or "overlies" may be used herein to describe a relationship of one layer or region to another layer or region relative to a substrate or base layer as illustrated in the figures. It will be understood that these terms are intended to encompass different orientations of the device in addition to the orientation depicted in the figures. Finally, the term "directly" means that there are no intervening elements. As used herein, the term "and/or" includes any and all combinations of one or more of the associated listed items and may be abbreviated as "/".

[0029] It will be understood that, although the terms first, second, etc. may be used herein to describe various elements, components, regions, layers and/or sections, these elements, components, regions, layers and/or sections should not be limited by these terms. These terms are only used to distinguish one element, component, region, layer or section from another region, layer or section. Thus, a first element, component, region, layer or section discussed below could be termed a second element, component, region, layer or section without departing from the teachings of the present invention.

[0030] Embodiments of the invention are described herein with reference to cross-sectional and/or other illustrations that are schematic illustrations of idealized embodiments of the invention. As such, variations from the shapes of the illustrations as a result, for example, of manufacturing techniques and/or tolerances, are to be expected. Thus, embodiments of the invention should not be construed as limited to the particular shapes of regions illustrated herein but are to include deviations in shapes that result, for example, from manufacturing. For example, a region illustrated or described as a rectangle will, typically, have rounded or curved features due to normal manufacturing tolerances. Thus, the regions illustrated in the figures are schematic in nature and their shapes are not intended to illustrate the precise shape of a region of a device and are not intended to limit the scope of the invention, unless otherwise defined herein.

[0031] Unless otherwise defined herein, all terms (including technical and scientific terms) used herein have the same meaning as commonly understood by one of ordinary skill in the art to which this invention belongs. It will be further understood that terms, such as those defined in commonly used dictionaries, should be interpreted as having a meaning that is consistent with their meaning in the context of the relevant art and this specification and will not be interpreted in an idealized or overly formal sense unless expressly so defined herein.

[0032] FIGS. **1**A and **1**B are a perspective view and a cross-sectional view of semiconductor light emitting apparatus according to various embodiments of the present invention. As shown in FIGS. **1**A and **1**B, these semiconductor light emitting apparatus include an elongated hollow wavelength conversion tube **110** that comprises an elongated wavelength conversion tube wall **112** having wavelength conversion material **114** uniformly or non-uniformly dispersed therein. As used herein, a tube denotes a long hollow object that may be, but need not be, cylindrical. Accordingly, the tube may be circular, elliptical, ellipsoidal and/or polygonal. A semiconductor light emitting device **120** is oriented to emit light **122** inside the elongated hollow wavelength conversion tube **110** to impinge upon the elongated wavelength conversion tube wall **112** and the wavelength conversion material **114** dispersed therein. In some embodiments, the semiconductor light emitting device **120** may be a packaged light emitting diode **130** that includes a mounting substrate **124** and a dome **126** on the mounting substrate **124**, wherein the semiconductor light emitting device **120** is located between the mounting substrate **124** and the dome **126**. One or more electrical leads **128** may extend from the mounting substrate **124**. As also shown in FIGS. **1**A and **1**B, the tube wall **112** defines a tube axis **132**, and the semiconductor light emitting device **120** is configured to emit light **122** generally symmetrically about an emission axis and is oriented such that the emission axis is generally coincident with the tube axis **132**.

[0033] Various configurations of the semiconductor light emitting device **120**, the mounting substrate **124** and the dome **126** may be provided according to various embodiments of the present invention. In some embodiments, the packaged semiconductor light emitting device **130** may be represented by a commercially available LED, such as a Cree® EZ 1000™ LED, manufactured by the assignee of the present invention, and described in the Data Sheet CPR3CR, Rev. A, entitled *Cree®EZ*1000™ *LEDs Data Sheet CxxxEZ*1000-*Sxx*000, copyright 2006, Cree, Inc., available on the Web at cree.com. As indicated in this data sheet, these LEDs may use a single semiconductor die of size 980/980 μm^2 or about 1 mm^2. These LEDs may operate at a voltage of about 3 V (more typically about 3.3 V), and a current of about 350 mA (current density of about 35 A/cm^2) for an input power of about 1 watt. The Cree EZ1000 LED may be manufactured under one or more of the following U.S. patents/

applications, the disclosures of which are hereby incorporated herein in their entirety as if set forth fully herein: U.S. Pat. No. D566,057, issued Apr. 8, 2008, entitled LED Chip; U.S. Application Publication No. 2008/0173884, published Jul. 24, 2008, entitled Wafer Level Phosphor Coating Method and Devices Fabricated Utilizing Same; U.S. Application Publication No. 2008/0179611, published Jul. 31, 2008, entitled Wafer Level Phosphor Coating Method and Devices Fabricated Utilizing Same; and U.S. Application No. 29/284,431, filed Sep. 7, 2007, entitled LED Chip. However, other commercially available packaged LEDs or bare LED dice may be used.

[0034] The EZ1000 LED may be provided on a silver (Ag) header and encapsulated with a dome comprising, for example, Hysol® OS4000 fast curing water-white epoxy casting compound, marketed by Loctite. However, in other embodiments, other materials, such as epoxy, silicone and/or other transparent encapsulants may also be used. Moreover, the LED need not have a dome, so that a bare die or a domeless LED also may be used. In some embodiments, as shown in FIG. **1**A, the semiconductor light emitting device **120** may be adjacent but not within the elongated hollow wavelength conversion tube **110**. In other embodiments, as shown in FIG. **1**B, the semiconductor light emitting device **120** may be at least partially within the elongated hollow wavelength conversion tube **110**. In still other embodiments, the transparent dome **126** may be entirely within the elongated hollow wavelength conversion tube **110**, whereas the mounting substrate **124** may be entirely outside and up against an end of the elongated hollow wavelength conversion tube.

[0035] In fact, FIGS. **1**A and **1**B also illustrate methods of assembling a semiconductor light emitting apparatus according to some embodiments, wherein a dome **126** that surrounds a semiconductor light emitting device **120** that is on a substrate **124** is inserted at least partially into an end of an elongated hollow wavelength conversion tube **110** having wavelength conversion material **114** dispersed therein. The dome may be press-fit inside the tube or an adhesive or other attaching element may be used.

[0036] The elongated hollow wavelength conversion tube **110** may be constructed from a sheet of plastic, epoxy, silicone and/or other transparent or translucent material, such as the aforementioned OS4000 material, that contains phosphor dispersed therein. The material may be mixed with phosphor at a desired concentration and then formed into a sheet, which is allowed to cure. The sheet may be rolled and glued into a tube and cut to a desired length. Alternatively, straws of plastic material including phosphor encapsulated therein may be provided and cut to size. Moreover, the hollow wavelength conversion tube **110** may be molded, extruded and/or formed by other conventional processes. The phosphor may be conventional YAG phosphor, conventional (Ca, Si, Ba) SiO_4: Eu^{2+} (BOSE) phosphor and/or other conventional phosphors that may vary in composition and/or concentration depending upon the characteristics of the semiconductor light emitting device **120** and/or other parameters. The elongated hollow wavelength conversion tube **110** may be evacuated, air-filled or filled with an inert and/or reactive gas. The tube may also include a solid and/or gel therein to provide, for example, encapsulant, index matching, etc. The wavelength conversion material **114** may be uniformly or non-uniformly dispersed in the elongated wavelength conversion tube wall **112**. Uniform or non-uniform composition and/or concentration may be employed.

[0037] Dimensionally, the elongated hollow wavelength conversion tube **110** may have a length of between about 1 mm and about 100 mm, and an inner diameter of between about 0.5 mm and about 10 mm. The tube wall **112** may have a thickness of between about 0.05 mm and about 2 mm. Wavelength conversion particles may be dispersed therein at concentrations between about 1% and about 70% by weight. The use of an elongated hollow wavelength conversion tube according to various embodiments of the invention may provide efficient white light. For example, a Cree EZ1000 LED having about a 1 mm^2 size and a drive current of about 350 mA at room temperature in combination with an elongated hollow wavelength conversion tube that is about 45 mm long, having an inside diameter of about 9 mm and a wall thickness of about 2 mm, and being fabricated from a sheet of flexible transparent silicone having Internatix BOSE phosphor dispersed therein at a concentration of about 30% by weight, can produce about 170 lumens of light output, about 160 lumens/watt efficiency at color temperature of about 4700K, and about 150 lumens/watt efficiency at color temperature of about 5500K. FIG. **19** graphically illustrates efficiency in lumens/watt (lm/w) vs. CCT, for these example embodiments. It will be understood that, in FIG. **19**, various concentrations of phosphors may be used to obtain the desired color temperature.

[0038] Without wishing to be bound by any theory of operation, high efficiency white light production may be obtained according to various embodiments of the present invention by causing almost all of the light that is emitted by the semiconductor light emitting device **120** to strike the elongated wavelength conversion tube wall **112** at an oblique angle. More specifically, referring to FIG. **2**A, a packaged light emitting diode may emit light in a Lambertian pattern **220**, wherein the radiant intensity is directly proportional to the cosine of the angle between the observer's line of sight and an axis **210** that is normal to the surface of the semiconductor light emitting device **130**. The Lambertian pattern **220** may be obtained by designing the light emitting device **120** to emit light in a Lambertian pattern, and designing the dome **126** so as not to change this emission pattern, or by designing the light emitting device **120** to emit light in a non-Lambertian pattern and by designing one or more optical elements in the dome **126**, so that the light that emerges from the dome **126** is Lambertian. In other embodiments, as shown in FIG. **2**B, a packaged or unpackaged light emitting diode may emit light in a focused (i.e., narrow far-field emission) pattern **230**, wherein more radiant energy is emitted closer to the axis **210** of emission than to the sides. Again, this focused pattern may be obtained by designing the light emitting device **120** to emit light in a focused pattern and designing the dome **126** so as to not change this emission pattern or by designing the light emitting device **120** to emit light in a non-focused pattern and by designing one or more optical elements in the dome **126** so that the light emerges from the dome **126** in a focused pattern. Other conventional emission patterns may be used.

[0039] Conventionally, the dome **126** may be designed to be hemispherical so that the emitted light **122** crosses the dome perpendicular to the dome surface. Thus, if phosphor is coated on the inner and/or outer surfaces of the dome **126**, much of the emitted light will be backscattered into the device **120**. In sharp contrast, when the packaged LED **130** is mounted relative to an elongated hollow wavelength conversion tube as shown in FIG. **1**B, at least 20% of the emitted light **122** can strike the elongated hollow wavelength conver-

sion tube wall **112** at an oblique angle, as shown in FIG. **1**B. The backscattering of light back into the semiconductor light emitting device **120** may be substantially reduced. Moreover, in some embodiments, at least about 90% of the emitted light **122** can strike the elongated hollow wavelength conversion tube wall **112** at an oblique angle, as shown in FIG. **1**B. The backscattering of light back into the semiconductor light emitting device may be substantially reduced.

[0040] Accordingly, some embodiments of the present invention may allow light that is emitted from the semiconductor light emitting device **120** to pass through the dome **126** generally orthogonal thereto, but to strike the elongated hollow wavelength conversion tube wall **112** substantially oblique thereto. Thus, some embodiments of the invention may be regarded as providing a primary optical surface, such as the dome **126** of the packaged light emitting diode **130**, wherein Lambertian radiation causes almost all of the emitted light to cross the surface orthogonal thereto, and the elongated wavelength conversion tube wall **112** provides a secondary optical surface including wavelength conversion material **114** dispersed therein, wherein almost all of the light impinges on the secondary optical surface **112** at an oblique angle thereto.

[0041] Without wishing to be bound by any theory of operation, high efficiency of embodiments of the present invention may also be explained due to different path lengths that may be established within the elongated hollow wavelength conversion tube **110**. In particular, referring to FIGS. **3** and **3**A, the emitted light **122** from the semiconductor light emitting device **120** reflects off the inner surface of the tube wall **110**, as shown by ray **310**, and also refracts within the tube wall, as shown by ray **312**. Additional internal reflection takes place from the outer wall, as shown as by ray **314**, and some of the original light **316** emerges from the tube. The path through the wall **112** is indicated by ray **312**. In contrast, when light strikes a phosphor particle **114** that is embedded within the tube wall **112**, it is converted and scattered in all directions, as shown by the rays **322**.

[0042] Accordingly, as shown in FIGS. **3** and **3**A, except for near the semiconductor light emitting device **120**, very little light is reflected back at the semiconductor light emitting device **120**. In order for the light **122**, such as blue light, that emerges from the semiconductor light emitting device **120** to convert, for example to yellow light, it must impinge on a wavelength conversion material (e.g., phosphor) particle **114**. Once it does convert, it is desirable for the converted emission **322** to escape with minimal obstruction, not only from the LED **130** but also from other wavelength conversion material particles **114**. Thus, it is desirable for the wavelength conversion material layer to appear thick for the blue light, but thin for the yellow emission **322**. The tube **110** helps to achieve this, because the blue light has a longer path **312** through the tube wall **112** at grazing incidence and the same amount of conversion can be achieved with less wavelength conversion material **114**. Thus, since the blue light has a longer path length **312** through the tube wall **112** at grazing incidence, the tube appears thicker for the incoming blue light. Since the tube appears thicker, a lower concentration of phosphor may be used. By using a lower concentration of phosphor, less phosphor obstruction may be provided. Accordingly, in some embodiments, the elongated hollow wavelength conversion tube **110** is oriented relative to the semiconductor light emitting device **120**, so as to provide a longer path length **312** through the elongated wavelength conversion tube wall **112** for light **122** that is emitted by the semiconductor light emitting device **120** that does not strike the wavelength conversion material **114** embedded therein, without increasing the path length of light **322** that is converted by the wavelength conversion material **114** embedded therein.

[0043] Various configurations of elongated hollow wavelength conversion tubes may be provided according to various embodiments of the present invention. For example, as shown in FIG. **4**, the elongated hollow wavelength conversion tube **110** includes first and second opposing ends **110***a*, **110***b*, and the semiconductor light emitting device **120** is adjacent the first end **110***a*. It will also be understood that in FIG. **4** and other figures to follow, the semiconductor light emitting device **120** is shown outside the elongated hollow wavelength conversion tube **110**. In these embodiments, a reflector, lens and/or other optical element may be provided to direct the light **122** inside the tube **110**. However, in other embodiments, the semiconductor light emitting device **120** may extend at least partially into the elongated hollow wavelength conversion tube **110**. In yet other embodiments, the semiconductor light emitting device **120** extends fully into the elongated hollow wavelength conversion tube **110**.

[0044] In FIG. **4**, the second end **110***b* is an open end. In contrast, in FIG. **5**, the second end **110***b* is a closed second end, which may be provided by a cap **510**. The cap **510** may be reflective and/or may contain wavelength conversion material therein. The cap **510** may be planar or non-planar as illustrated. For example, a hemispherical, prismatic, textured and/or microlens-covered cap may be provided. The wavelength conversion material in the cap **510** may be same as, or different from the wavelength conversion material **114** in the elongated wavelength conversion tube wall **112** in terms of composition and/or concentration. In other embodiments, as shown in FIG. **6**, the second end **110***b* is a crimped second end **610**. It will be understood that the word "crimped" is used herein to denote a tapered end, and not to denote any particular manufacturing method. Thus, FIG. **6** illustrates embodiments of bullet-shaped elongated hollow wavelength tubes **110**.

[0045] Embodiments of the invention that have been described above employ one or more semiconductor light emitting devices **120** at a first end **110***a* of the elongated hollow wavelength conversion tube **110**. However, in other embodiments, at least one semiconductor light emitting device may be provided at both ends of the tube **110**. For example, as shown in FIG. **7**, a first semiconductor light emitting device **120***a* is included adjacent the first end **110***a* of the elongated hollow wavelength conversion tube **110**, and oriented to emit light inside the elongated hollow wavelength conversion tube **110**. A second semiconductor light emitting device **120***b* is located adjacent the second end **110***b* and is oriented to emit light **122***b* inside the elongated hollow wavelength conversion tube.

[0046] FIG. **8** illustrates other embodiments wherein a double-sided reflector **810** is included in the elongated hollow wavelength conversion tube **110** between the first and second semiconductor light emitting devices **120***a*, **120***b*. The double-sided reflector **810** may be embodied as a mirror, a ball bearing and/or other device that reflects at least some light impinging thereon. For example, a spherical, prismatic, textured and/or microlens-covered double-sided reflector may be provided. The double-sided reflector **810** may be flat or non-planar as shown. The double-sided reflector also may include wavelength conversion material. FIG. **9**A illustrates

other embodiments wherein the elongated hollow wavelength conversion tube **110** is crimped as shown at **910**, between the first and second semiconductor light emitting devices **120***a*, **120***b*. FIG. **9**A shows a gradual crimp that is fully closed, whereas FIG. **9**B illustrates an abrupt crimp **920** that is not fully closed.

[0047] FIG. **10** illustrates other embodiments wherein the first and second semiconductor light emitting devices **120***a*, **120***b* are oriented in back-to-back relation within the elongated hollow wavelength conversion tube **110**, such that the first semiconductor device **120***a* emits light **122***a* towards the first end **110***a* and the second semiconductor light emitting device **120***b* emits light **122***b* towards the second end **110***b*. In other embodiments, the first and/or second ends **110***a*, **110***b* may include a cap, such as a cap **510** of FIG. **5**, may be crimped or tapered, such as by including crimp **610** of FIG. **6**, or may be open as shown. Also, the two ends need not have the same type of termination.

[0048] The elongated hollow wavelength conversion tube **110** itself may also have many different configurations. For example, in FIG. **11**A, the elongated tube wall **112** includes inner and outer surfaces wherein the inner and/or outer surfaces are textured as shown. The texturing may be uniform and/or non-uniform. Texturing may enhance scattering of light. Moreover, FIG. **11**B illustrates other embodiments wherein a sawtooth pattern or other pattern may be used to guide the unconverted light, so as to further increase its path length in the wavelength conversion tube. Other light guiding patterns may also be used.

[0049] In other embodiments, as shown in FIGS. **12** and **13**, a supporting layer may be provided to support the elongated wavelength conversion tube wall **112**. In FIG. **12**, the supporting layer **1210** is on the outer surface of the elongated hollow wavelength conversion tube wall **112**, whereas in FIG. **13**, the supporting layer is on the inner surface of the elongated hollow wavelength conversion tube wall **112**. In fact, embodiments of FIGS. **12** and **13** may be fabricated by coating a wavelength conversion material **114** inside or outside a supporting tube **1210**, **1310**, respectively, so that the elongated hollow wavelength conversion tube **110** may actually be embodied as a coating on a supporting material. In still other embodiments, a supporting layer may be provided on both the inside and outside surfaces of the elongated wavelength conversion tube wall **112**.

[0050] Multiple concentric elongated hollow conversion tubes **112** also may be provided according to other embodiments. In particular, as shown in FIG. **14**, a first elongated hollow wavelength conversion tube **112***a* and a second elongated hollow wavelength conversion tube **112***b* are provided coaxial to one another. The tubes may be spaced apart and may be supported by a common supporting layer **1410**. In fact, embodiments of FIG. **14** may be fabricated by coating inner and outer surfaces of a supporting layer **1410** with wavelength conversion material **114**. In embodiments of FIG. **14**, the wavelength conversion material **114** dispersed in the first and second elongated wavelength conversion tube walls **112***a*, **112***b* may be the same or may be different in composition and/or concentration.

[0051] FIG. **15** illustrates other embodiments wherein a plurality of elongated hollow wavelength conversion tubes **110** are provided for a semiconductor light emitting device **120** or a cluster of semiconductor light emitting devices **120**. Thus, a semiconductor light emitting device **120**, or a cluster of semiconductor light emitting devices **120**, is adjacent a first end of each of the tubes. In FIG. **16**, the elongated hollow wavelength conversion tubes **110** extend about a common origin, and the semiconductor light emitting device **120** is adjacent the common origin. In some embodiments, FIG. **16** may be regarded as a cross-sectional view showing a plurality of hollow wavelength conversion tubes **110** that surround a common origin and extend within the plane of the figure to provide a two-dimensional array. FIG. **16** may also be regarded as illustrating a cross-section of a three-dimensional array of hollow elongated tubes **110** that extend around a common axis **1600**, as shown by arrow **1610**. Thus, flower petal-like designs may be provided for semiconductor light emitting apparatus according to these embodiments.

[0052] Various embodiments of the invention as described above may also be regarded as providing a semiconductor light emitting filament that may be analogized to the filament of a conventional incandescent lamp or to a miniature fluorescent bulb. Thus, as shown in FIG. **17**, an elongated hollow wavelength conversion tube **110** includes a packaged semiconductor light emitting device **130** at either end. The packaged semiconductor devices **130** may be mounted on a base **1710** using heat conductive standoffs **1720** and/or other conventional mounting techniques. A bulb **1730** and a screw-type base **1740** may be provided, so that the combination of the elongated hollow wavelength conversion tube **110** and the packaged semiconductor light emitting devices **130** at opposite ends thereof provides a filament for a drop-in replacement for an incandescent bulb. It will be understood that FIG. **17** provides a simplified representation and that a drop-in replacement for an incandescent bulb may also employ voltage conversion circuits, thermal management systems, etc.

[0053] In other embodiments, as shown in FIG. **18**, the filaments are oriented end-to-end in a linear array. Heat sinks **1810** and/or a reflector **1820** may also be provided.

[0054] Many different embodiments have been disclosed herein, in connection with the above description and the drawings. It will be understood that it would be unduly repetitious and obfuscating to literally describe and illustrate every combination and subcombination of these embodiments. Accordingly, the present specification, including the drawings, shall be construed to constitute a complete written description of all combinations and subcombinations of the embodiments described herein, and of the manner and process of making and using them, and shall support claims to any such combination or subcombination. For example, any of the embodiments illustrated herein may include a bare semiconductor light emitting device die or a packaged semiconductor LED; an open-ended, capped or crimped end; one or more bare or packaged semiconductor light emitting devices that are entirely outside, partially inside or fully inside the elongated hollow wavelength conversion tube; one or more supporting layers; one or more elongated hollow wavelength conversion tubes arranged concentrically or in a two- or three-dimensional array and/or packaged to include heat sinks, reflectors, driving circuitry and/or other components.

[0055] In the drawings and specification, there have been disclosed embodiments of the invention and, although specific terms are employed, they are used in a generic and descriptive sense only and not for purposes of limitation, the scope of the invention being set forth in the following claims.

What is claimed is:

1. A semiconductor light emitting apparatus comprising:

an elongated hollow wavelength conversion tube that comprises an elongated wavelength conversion tube wall having wavelength conversion material dispersed therein; and

a semiconductor light emitting device that is oriented to emit light inside the elongated hollow wavelength conversion tube to impinge upon the elongated wavelength conversion tube wall and the wavelength conversion material dispersed therein.

2. An apparatus according to claim **1** wherein the semiconductor light emitting device is oriented such that at least about 20% of the emitted light strikes the elongated wavelength conversion tube wall at an oblique angle.

3. An apparatus according to claim **1** wherein the semiconductor light emitting device is oriented such that at least about 90% of the emitted light strikes the elongated wavelength conversion tube wall at an oblique angle.

4. An apparatus according to claim **1** wherein the semiconductor light emitting device is a blue light emitting diode having an area of about 1 mm^2 and wherein the semiconductor light emitting apparatus produces about 160 lumens per watt at a color temperature of about 4700K.

5. An apparatus according to claim **1** wherein the semiconductor light emitting device is a blue light emitting diode having an area of about 1 mm^2 and wherein the semiconductor light emitting apparatus produces about 150 lumens per watt at a color temperature of about 5500K.

6. An apparatus according to claim **1** wherein the elongated hollow wavelength conversion tube is oriented relative to the semiconductor light emitting device so as to provide a longer path length through the elongated wavelength conversion tube wall for light that is emitted by the semiconductor light emitting device that does not strike the wavelength conversion material embedded therein without increasing the path length of light that is converted by striking the wavelength conversion material embedded therein.

7. An apparatus according to claim **1** wherein the tube wall defines a tube axis, wherein the semiconductor light emitting device is configured to emit light symmetrically about an emission axis and wherein the semiconductor light emitting device is oriented such that the emission axis is coincident with the tube axis.

8. An apparatus according to claim **1** wherein the elongated hollow wavelength conversion tube includes first and second opposing ends, and the semiconductor light emitting device is adjacent the first end.

9. An apparatus according to claim **8** wherein the second end is a closed second end.

10. An apparatus according to claim **9** wherein the second end is a crimped second end.

11. An apparatus according to claim **9** further comprising a cap at the second end.

12. An apparatus according to claim **11** wherein the cap comprises wavelength conversion material.

13. An apparatus according to claim **11** wherein the cap comprises reflective material.

14. An apparatus according to claim **8** wherein the semiconductor light emitting device is a first semiconductor light emitting device, the apparatus further comprising a second semiconductor light emitting device adjacent the second end that is oriented to emit light inside the elongated hollow wavelength conversion tube to impinge upon the elongated wavelength conversion tube wall and the wavelength conversion material dispersed therein.

15. An apparatus according to claim **14** further comprising a double-sided reflector in the elongated hollow wavelength conversion tube between the first and second semiconductor light emitting devices.

16. An apparatus according to claim **14** wherein the elongated hollow wavelength conversion tube is crimped between the first and second semiconductor light emitting devices.

17. An apparatus according to claim **1** wherein the semiconductor light emitting device extends at least partially into the elongated hollow wavelength conversion tube.

18. An apparatus according to claim **17** wherein the elongated hollow wavelength conversion tube includes first and second opposing ends and wherein the semiconductor light emitting device extends at least partially into the wavelength conversion tube to emit light towards the first end.

19. An apparatus according to claim **18** wherein the semiconductor light emitting device is a first semiconductor light emitting device, the apparatus further comprising a second semiconductor light emitting device that extends at least partially into the elongated hollow wavelength conversion tube to emit light towards the second end.

20. An apparatus according to claim **19** wherein the first and second semiconductor light emitting devices are oriented in back-to-back relation within the elongated hollow wavelength conversion tube.

21. An apparatus according to claim **1** wherein the elongated hollow wavelength conversion tube is a first elongated hollow wavelength conversion tube, the apparatus further comprising a second elongated hollow wavelength conversion tube, wherein the first and second elongated hollow wavelength conversion tubes share a common end and wherein the semiconductor light emitting device is adjacent the common end and is oriented to emit light inside the first and second elongated hollow wavelength conversion tubes.

22. An apparatus according to claim **1** wherein the elongated hollow wavelength conversion tube wall includes inner and outer surfaces and wherein the elongated hollow wavelength conversion tube further comprises a supporting layer on the inner surface and/or on the outer surface.

23. An apparatus according to claim **1** wherein the elongated hollow wavelength conversion tube is a first elongated hollow wavelength conversion tube, the apparatus further comprising:

a second elongated hollow wavelength conversion tube that comprises a second elongated wavelength conversion tube wall having wavelength conversion material dispersed therein, the first and second elongated hollow wavelength conversion tubes being coaxial to one another.

24. An apparatus according to claim **1** wherein the elongated tube wall includes inner and outer surfaces and wherein the inner and/or outer surfaces are textured.

25. An apparatus according to claim **24** wherein the inner and/or outer surfaces are non-uniformly textured.

26. An apparatus according to claim **1** wherein the elongated tube wall has wavelength conversion material non-uniformly dispersed therein.

27. An apparatus according to claim **1** further comprising:

a mounting substrate; and

a dome on the mounting substrate;

wherein the semiconductor light emitting device is located between the mounting substrate and the dome; and

wherein the dome extends at least partially into an end of the elongated hollow wavelength conversion tube and the mounting substrate extends at least partially outside the elongated hollow wavelength conversion tube.

28. An apparatus according to claim **19** further comprising:

a screw-type base;

a pair of standoffs that maintain the elongated hollow wavelength conversion tube and the first and second semiconductor light emitting devices spaced apart from the base; and

a bulb that is connected to the screw-type base and surrounds the hollow wavelength conversion tube and the first and second semiconductor light emitting devices.

29. An apparatus according to claim **21** further comprising a plurality of elongated hollow wavelength conversion tubes that share the common end and extend around a central axis.

30. A semiconductor light emitting apparatus comprising:

a plurality of light emitting filaments, a respective light emitting filament comprising an elongated hollow wavelength conversion tube that includes an elongated wavelength conversion tube wall having wavelength conversion material dispersed therein and a semiconductor light emitting device that is oriented to emit light inside the elongated hollow wavelength conversion tube to impinge upon the elongated wavelength conversion tube wall and the wavelength conversion material dispersed therein.

31. An apparatus according to claim **30** wherein the plurality of light emitting filaments are oriented end-to-end in a linear array.

32. An apparatus according to claim **30** wherein the plurality of light emitting filaments extend about a common origin in a three-dimensional array.

33. A method of assembling a semiconductor light emitting apparatus comprising:

inserting a dome that surrounds a semiconductor light emitting device that is on a substrate at least partially into an end of an elongated hollow wavelength conversion tube having wavelength conversion material dispersed therein.

34. A method according to claim **33** further comprising crimping the elongated hollow wavelength conversion tube remote from the end.

* * * * *