Trials@uspto.gov
571-272-7822

Paper 36
Date: August 31, 2026

UNITED STATES PATENT AND TRADEMARK OFFICE

BEFORE THE PATENT TRIAL AND APPEAL BOARD

SAVANT TECHNOLOGIES LLC d/b/a GE LIGHTING and
LEDVANCE LLC,

Petitioner,

v.

FEIT ELECTRIC COMPANY, INC.,

Patent Owner.

IPR2024-01357 (Patent 8,604,678 B2)

SAVANT TECHNOLOGIES LLC d/b/a GE LIGHTING,
ELONG INTERNATIONAL USA INC., and
XIAMEN LONGSTAR LIGHTING CO. LTD,

Petitioner,

v.

FEIT ELECTRIC COMPANY, INC.,

Patent Owner.

IPR2025-00260 (Patent 8,604,678 B2)

Before KEVIN W. CHERRY, SCOTT B. HOWARD, and
ANDREW L. NALVEN, *Administrative Patent Judges*.

CHERRY, *Administrative Patent Judge*

JUDGMENT
Final Written Decision
Determining All Challenged Claims Unpatentable

Denying Patent Owner's Motion to Amend
35 U.S.C. § 318(a)

I. INTRODUCTION

On August 26, 2024, Savant Technologies LLC d/b/a GE Lighting and LEDVANCE LLC (collectively, "Petitioners"1) filed a Petition (Paper 1[1], "Pet.") requesting inter partes review of claims 1–3, 6, 7, 9, 10, 16–21, 25, 26, and 29 of U.S. Patent No. 8,604,678 B2 (Ex. 1001, the "'678 patent") ("the '1357 IPR"). Feit Electric Company, Inc. ("Patent Owner") filed a Preliminary Response arguing both that we should exercise our discretion to deny institution based on parallel district court litigations and that Petitioners have not shown a reasonable likelihood of prevailing (Paper 13). With our permission, Petitioners filed a reply (Paper 14), and Patent Owner filed a sur-reply (Paper 16). On March 5, 2025, we instituted *inter partes* review under 35 U.S.C. § 314(a). Paper 17 ("'1357 IPR Inst. Dec.").

On December 9, 2024, Savant Technologies LLC d/b/a GE Lighting, Elong International USA Inc., and Xiamen Longstar Lighting Co. Ltd. filed a Petition requesting inter partes review of claims 1 and 11–14 of the '678 patent("the '260 IPR," '260 IPR, Paper 1 ("'260 IPR Pet.")). Patent Owner did not file a Preliminary Response. On April 24, 2025, Patent Owner filed a request with the Acting Director of the USPTO seeking discretionary denial of the Petition. Paper 13. Petitioner filed an opposition ('260 IPR, Paper 14) and, with authorization, Patent Owner filed a reply ('260 IPR, Paper 15). On June 12, 2025, the Acting Director issued a decision denying the request and referring the Petition to the Board "to handle the case in the

[1] All citations are to the record in IPR2024-01357, unless otherwise noted.

normal course, including by issuing a decision on institution addressing the merits and other nondiscretionary considerations, as appropriate." '260 IPR, Paper 16, 3. The Acting Director further instructed the Board, "[a]bsent extraordinary circumstances, the Board shall consolidate this proceeding with IPR2024-01357." *Id.* On June 23, 2025, we instituted *inter partes* review under 35 U.S.C. § 314(a), and consolidated IPR2025-00260 with IPR2024-01357. '260 IPR, Paper 17 ("-00260 Inst. Dec.").

During the trial, Patent Owner filed a Response to the '1357 IPR Petition (Paper 26, "PO Resp."), a Response to '260 IPR Petition (Paper 34[2], "'260 IPR PO Resp."), Petitioner filed a Reply (Paper 40, "Reply"), and Patent Owner filed a Sur-Reply (Paper 45, "Sur-Reply"). Patent Owner also filed a Motion to Amend that is contingent on the unpatentability of claims 1–3, 6, 7, 9, 10, 16–21, 25, 26, and 29. Paper 27. After institution of the '260 IPR and consolidation of the proceedings, Patent Owner filed a Supplemental Motion to Amend ("Mot.," Paper 35) that is contingent on the unpatentability of claims 11–14. Petitioner filed an opposition to both the Motion and Supplemental Motion ("Opp.," Paper 41). On October 24, 2025, we issued preliminary guidance on Patent Owner's motion to amend. Paper 42 ("Prelim. Guid."). Patent Owner filed a Revised Contingent Motion to Amend that is contingent on the unpatentability of claims 1–3, 6, 7, 9, 10–14, 16–21, 25, 26, and 29 a finding. Paper 46 ("Revised Motion" or "Rev. Mot."). Petitioner filed an Opposition to the Revised Motion. Paper 49 ("Rev. Opp."). Patent Owner filed a Reply. Paper 55 ("PO Reply").

[2] The '260 IPR PO Resp. and '260 IPR Supplemental Motion to Amend were filed on the docket of the '1357 IPR.

The parties requested oral argument. Papers 52, 53. A hearing was conducted on February 26, 2026. Paper 67 ("Tr.").

We have jurisdiction under 35 U.S.C. § 6. This Final Written Decision is entered pursuant to 35 U.S.C. § 318(a). Having reviewed the complete trial record, we determine that Petitioner has shown, by a preponderance of the evidence, that the challenged claims are unpatentable. We deny the motion to amend.

II. BACKGROUND

A. *Real Parties in Interest*

In the '1357 IPR, Petitioner identifies Savant Technologies LLC d/b/a GE Lighting, LEDVANCE LLC, and Seoul Semiconductor Co. Ltd. as real parties in interest. Pet. 16. Petitioner further states that "Elong International USA Inc. is not a Real Party-in-Interest, but it does have a business relationship with Seoul Semiconductor Co. Ltd. and is identified here for Board assessment of internal conflicts of interest." *Id.*

In the '260 IPR, Petitioner identifies Savant Technologies LLC d/b/a GE Lighting, Elong International USA Inc., Xiamen Longstar Lighting Co. Ltd., and Seoul Semiconductor Co. Ltd. as real parties in interest. Pet. 18. Petitioner further states that "LEDVANCE LLC is not a Real Party-in-Interest, but it does have a business relationship with Seoul Semiconductor Co. Ltd. and is identified here for Board assessment of internal conflicts of interest." *Id.*

Patent Owner identifies Feit Electric Company, Inc. as its real party in interest in both cases. Paper 7, 1; '260 IPR Paper 7, 1.

B. *Related Matters*

The parties identify the following district-court proceeding as a related matter involving the '678 patent: *Feit Electric Co., Inc. v. Savant*

Technologies LLC d/b/a GE Lighting, No. 1:24-cv-473 (N.D. Ohio), *Feit Electric Co., Inc. v. LEDVANCE, LLC*, No. 5:24-cv-31 (E.D. Ky.); and *Feit Electric Co., Inc. v. Elong International USA Inc.*, No. 3:24-cv-1089 (N.D. Tex.). Pet. 17; Paper 15, 2 (Patent Owner's Mandatory Notices).

C. *The '678 Patent (Ex. 1001)*

The '678 patent relates to light-emitting diode (LED) devices that use photoluminescent materials to generate a desired color of light—generally white. Ex. 1001, 1:24–26. The background section explains that traditional LED devices work by using a diode that emits blue or ultraviolet light and photoluminescent materials, e.g., phosphors, that absorb the blue/UV light and re-emit light of a different color. *See id.* at 1:30–42, 46–50. The combination of the unabsorbed blue/UV light from the diode and the light emitted by the phosphors appears nearly white to the human eye. *See id.* at 1:42–46. The problem with these systems, the '678 patent explains, is that the devices do not look white when the diode is in the OFF state. *See id.* at 1:64–2:9. This is because the phosphors continue converting the ambient light to a different wavelength even as the diode is not emitting any blue light. *See id.* The result is that, in the OFF state, traditional LED devices do not look white—they have a yellowish, yellow-orange, or orange-color appearance—which some consumers find off-putting. *See id.* at 2:9–16. The patent lists several other problems with traditional LED devices as well: the color changes depending on the emission angle and phosphors are relatively costly. *See id.* at 2:17–41. The '678 patent proposes to solve these problems by modifying the wavelength-conversion component—the component that includes the luminescent material—to include a "a light diffusing layer comprising particles of a light diffractive material" such as TiO2. *See id.* at 2:55–3:14. The particles in the light diffusing layer are

designed to scatter external blue light "decreasing the probability of externally originated photons interacting with a phosphor material." *Id.* at 11:44–45. The patent asserts that, if properly assembled, this arrangement leads to various improvements in the LED devices: the devices have a "white color appearance" even in their OFF state; there is more "color uniformity of emitted light from an LED device for emission angles over a ±60° range from the emission axis"; and there is a "substantial[] reduc[tion in] the quantity of phosphor material required to generate a selected color of emitted light" by as much as 40%. *Id.* at 3:15–32.

D. *Challenged Claims*

Petitioner challenges claims 1–3, 6, 7, 9, 10, 16–21, 25, 26, and 29 of the '678 patent in the '1357 IPR. Pet. 1. The '260 IPR challenges claims 1 and 11–14 of the '678 patent. '260 Pet. 1. Of the challenged claims, claims 1, 19, and 29 are independent. Claims 1 and 29, reproduced below, are illustrative of the subject matter recited in the challenged claims.

> 1. A wavelength conversion component for a light emitting device comprising:
>
> a wavelength conversion layer comprising particles of at least one photoluminescence material; and
>
> a light diffusing layer comprising particles of a light scattering material,
>
> wherein the light diffusing layer improves an off-state white appearance of the wavelength conversion component;
>
> wherein the wavelength conversion component is configured such that in operation a portion of excitation light comprising blue light having a wavelength of greater than or equal to 440 nm generated by the light emitting device is emitted through the wavelength conversion component to contribute to a final visible emission product.

> 29. A light bulb comprising:
>
> a connector base configured to be inserted in a socket to form an electrical connection for the light bulb;
>
> a body comprising one or more solid-state light emitters;
>
> a wavelength conversion component having a three dimensional shape that is configured to enclose the one or more solid-state light emitters and to in part at least define a light mixing chamber,
>
> wherein the wavelength conversion component comprises a wavelength conversion layer comprising particles of at least one photoluminescence material and a light diffusing layer comprising particles of a light scattering material,
>
> wherein the light diffusing layer improves an off-state white appearance of the wavelength conversion component;
>
> wherein the wavelength conversion component is configured such that in operation a portion of light comprising blue light having a wavelength of greater than or equal to 440 nm generated by the one or more solid-state light emitters is emitted through the wavelength conversion component to contribute to a final visible emission product.

Ex. 1001, 26:9–24, 28:40–61.

E. *Asserted Grounds*

Petitioner asserts the following grounds of unpatentability in the ’1357 IPR:

Claim(s) Challenged	35 U.S.C. §	Reference(s)/Basis
1–3, 6, 7, 9, 10, 16–21, 25, 26	103(a)[3]	Basin-2007[4], Basin-2005[5]
19, 20, 29	103(a)	Hussell,[6] Basin-2007, Van Woudenberg[7]
1–3, 6, 10, 16, 19, 21, 25	103(a)	Krummacher[8], Stokes[9], Shimizu[10]
19, 20, 29	103(a)	Hussell, Krummacher, Van Woudenberg

[3] The Leahy-Smith America Invents Act, Pub. L. No. 112-29, 125 Stat. 284 (2011) ("AIA"), amended 35 U.S.C. § 103. The '678 patent issued from Application Serial No. 13/273,212 which was filed October 13, 2011, before the effective date of the applicable AIA amendments. Ex. 1001, code (22). Thus, we refer to the pre-AIA version of 35 U.S.C. § 103.

[4] Basin et al., US Patent Publ'n No. 2009/0057699 A1 (pub. Mar. 5, 2009) (Ex. 1005). It is called "Basin-2007" because of its filing date of September 4, 2007.

[5] Basin et al., US Patent Publ'n No. 2007/0045761 A1 (pub. Mar. 1, 2007) (Ex. 1006). It is called "Basin-2005" because of its filing date of August 26, 2005.

[6] Hussell et al., US 2010/0124243 A1 (published May 20, 2010, filed Nov. 18, 2008) (Ex. 1011, "Hussell").

[7] Van Woudenberg et al., WO 2008/044171 A2 (published Apr. 17, 2008, filed Oct. 4, 2007) (Ex. 1020, "Van Woudenberg").

[8] Krummacher, US 2008/0079015 A1 (published Apr. 3, 2008, filed Sep. 18, 2007) (Ex. 1007, "Krummacher").

[9] Stokes et al., U.S. Patent No. 6,791,259 B1 (issued Sep. 14, 2004, filed Aug. 22, 2000) (Ex. 1108, "Stokes").

[10] Shimizu et al., U.S. Patent No. 6,069,440 (issued May 30, 2000, filed Apr. 28, 1999) (Ex. 1010, "Shimizu").

Petitioner asserts the following grounds of unpatentability in the ’260 IPR:

Claim(s) Challenged	35 U.S.C. §	Reference(s)/Basis
1	103(a)	Basin-2007, Basin-2005
11–14	103(a)	Basin-2007, Basin-2005, Stokes
1, 11–14	103(a)	Krummacher, Stokes, Shimizu

III. ANALYSIS

A. *Legal Standards*

A patent claim is unpatentable under 35 U.S.C. § 103(a) if “the differences between the subject matter sought to be patented and the prior art are such that the subject matter as a whole would have been obvious at the time the invention was made to a person having ordinary skill in the art to which said subject matter pertains.” *KSR Int’l Co. v. Teleflex Inc.*, 550 U.S. 398, 406 (2007). The question of obviousness is resolved on the basis of underlying factual determinations, including: (1) the scope and content of the prior art; (2) any differences between the claimed subject matter and the prior art; (3) the level of skill in the art; and (4) objective evidence of nonobviousness, i.e., secondary considerations. *See Graham v. John Deere Co. of Kan. City*, 383 U.S. 1, 17–18 (1966).

In conducting an obviousness analysis, one must determine whether the claimed elements are present in the prior art. *PAR Pharm., Inc. v. TWI Pharms., Inc.*, 773 F.3d 1186, 1194–98 (Fed. Cir. 2014) (citing *Medichem, S.A. v. Rolabo, S.L.*, 437 F.3d 1157, 1164 (Fed. Cir. 2006)). However, a patent claim “is not proved obvious merely by demonstrating that each of its elements was, independently, known in the prior art.” *KSR*, 550 U.S. at 418.

An obviousness determination requires finding "both 'that a skilled artisan would have been motivated to combine the teachings of the prior art references to achieve the claimed invention, and that the skilled artisan would have had a reasonable expectation of success in doing so.'" *Intelligent Bio-Sys., Inc. v. Illumina Cambridge Ltd.*, 821 F.3d 1359, 1367–68 (Fed. Cir. 2016); *see KSR*, 550 U.S. at 418. Further, an assertion of obviousness "cannot be sustained by mere conclusory statements; instead, there must be some articulated reasoning with some rational underpinning to support the legal conclusion of obviousness." *KSR*, 550 U.S. at 418; *In re NuVasive, Inc.*, 842 F.3d 1376, 1383 (Fed. Cir. 2016) (a finding of a motivation to combine "must be supported by a 'reasoned explanation'").

"In an [*inter partes* review], the petitioner has the burden from the onset to show with particularity why the patent it challenges is unpatentable." *Harmonic Inc. v. Avid Tech., Inc.*, 815 F.3d 1356, 1363 (Fed. Cir. 2016) (citing 35 U.S.C. § 312(a)(3)); *see also Intelligent Bio-Sys.*, 821 F.3d at 1369. Therefore, to prevail in an *inter partes* review, Petitioner must explain how the proposed combinations of prior art would have rendered the challenged claims unpatentable.

B. *Level of Ordinary Skill in the Art*

We consider the asserted ground of unpatentability in view of the understanding of a person of ordinary skill in the art ("POSITA" or "POSA"). In assessing the level of ordinary skill in the art, various factors may be considered, including the "type of problems encountered in the art; prior art solutions to those problems; rapidity with which innovations are made; sophistication of the technology; and educational level of active workers in the field." *In re GPAC Inc.*, 57 F.3d 1573, 1579 (Fed. Cir. 1995) (quoting *Custom Accessories, Inc. v. Jeffrey-Allan Indus., Inc.*, 807 F.2d

955, 962 (Fed. Cir. 1986)). "[O]ne or more factors may predominate." *Id.*

Relying on the declaration testimony of its expert, Dr. Doolittle, Petitioner contends that an ordinarily skilled artisan for the '678 patent "would have had an undergraduate degree (i.e., B.S., B.S.E. or the equivalent) in electrical engineering, materials science, physics, or a similar discipline" and "would also have one to two years of experience in the field of LED packaging design." Pet. 5–6. Petitioner additionally contends that "[m]ore education could substitute for experience, and vice versa." *Id.* Petitioner further contends that "[t]his person would have been capable of understanding and applying the teachings of the '678 patent and the prior-art references discussed herein," and "[m]oreover, the prior art reflects the level of skill at the time of the claimed invention." *Id.* (citing *Okajima v. Bourdeau*, 261 F.3d 1350, 1355 (Fed. Cir. 2001); Ex. 1102 ¶¶ 38–42).

Patent Owner states that "solely for the purposes of this proceeding, Patent Owner and its technical expert employ the same level of skill in the art as Petitioners." PO Resp. 24–25.

Thus, we adopt Petitioner's articulation of the level of ordinary skill in the art, which is consistent with the '678 patent and the asserted prior art, and we apply it in our obviousness analysis below.

C. *Claim Construction*

In an *inter partes* review, claims are construed using the same claim construction standard that would be used to construe the claim in a civil action under 35 U.S.C. § 282(b). 37 C.F.R. § 42.100(b); *Phillips v. AWH Corp.*, 415 F.3d 1303 (Fed. Cir. 2005). This standard includes "construing the claim in accordance with the ordinary and customary meaning of such claim as understood by one of ordinary skill in the art and the prosecution history pertaining to the patent." 37 C.F.R. § 42.100(b). "Any prior claim

construction determination concerning a term of the claim in a civil action, or a proceeding before the International Trade Commission, that is timely made of record in the *inter partes* review proceeding will be considered." *Id.*

"In determining the meaning of the disputed claim limitation, we look principally to the intrinsic evidence of record, examining the claim language itself, the written description, and the prosecution history, if in evidence." *DePuy Spine, Inc. v. Medtronic Sofamor Danek*, Inc., 469 F.3d 1005, 1014 (Fed. Cir. 2006) (citing *Phillips*, 415 F.3d at 1312–17). Extrinsic evidence is "less significant than the intrinsic record in determining 'the legally operative meaning of claim language.'" *Phillips*, 415 F.3d at 1317.

"The Board is required to construe 'only those terms . . . that are in controversy, and only to the extent necessary to resolve the controversy.'" *Realtime Data, LLC v. Iancu*, 912 F.3d 1368, 1375 (Fed. Cir. 2019) (quoting *Vivid Techs., Inc. v. Am. Sci. & Eng'g, Inc.*, 200 F.3d 795, 803 (Fed. Cir. 1999)). In the Institution Decision, we determined that the parties disputed the term "light diffusing layer" in the preliminary proceedings, so we construed that term. *See* '1357 Inst. Dec. 17–20. At this stage of the proceedings, we determine that no terms require express construction to resolve the parties' disputes in this case. *See id.*; PO Resp. 25 (agreeing that "no express constructions are necessary to resolve this IPR").

D. *Prior Art*

Before turning to Petitioner's asserted grounds of unpatentability, we provide brief summaries of the asserted references. The '678 patent admits that portions of the claimed invention were taught in the prior art taught. The prior art taught "white LEDs [that] include one or more one or more photoluminescent materials (e.g., phosphor materials), which absorb a

portion of the radiation emitted by the LED and re-emit light of a different color (wavelength)." Ex. 1001, 1:35–38. The prior art taught that the LED emits blue light and the phosphors absorb this light and reemit light that, in combination with the LED's blue light, looks white. *See id.* at 1:38–46.

1. Basin-2007 (Ex. 1005)

Basin-2007 is titled "LED with Particles in Encapsulant for Increased Light Extraction and Non-Yellow Off-State Color." Ex. 1005, code (54) (capitalization altered). Basin-2007 explains that it is common to make LEDs using a die "that emit[s] blue light covered by a layer of yttrium aluminum oxide garnet (YAG) phosphor that emits a yellow-green light when energized by the blue light." *Id.* ¶ 3. As its title suggests, Basin-2007 is concerned with the problem described above—that, when the LED is in the OFF state, the phosphor coating appears yellow-green, which is "not attractive." *Id.* ¶ 4. Basin-2007 suggests solving this problem by including "granules of TiO_x, ZrO_x, or other white non-phosphor inert material . . . mixed with the substantially transparent encapsulant for LEDs." *Id.* ¶ 5.

Basin-2007's Figure 2, reproduced below, is particularly relevant to this case.

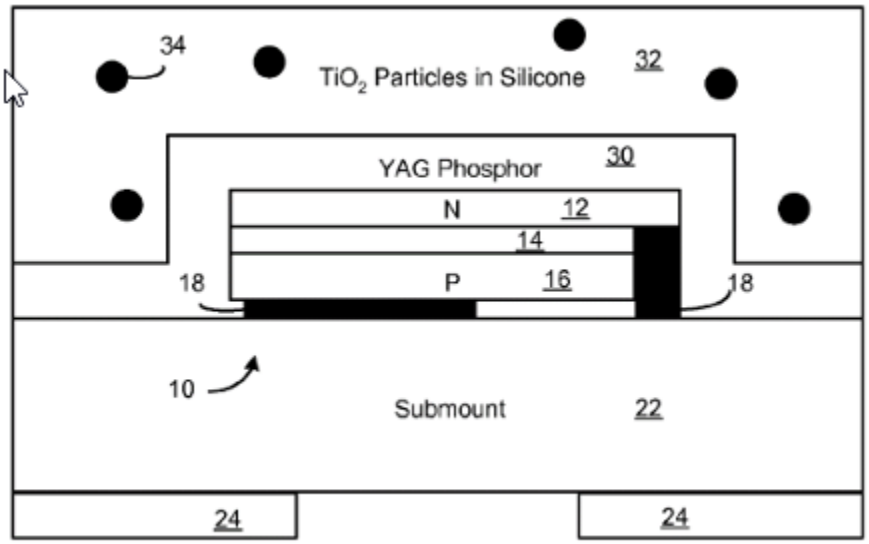

Fig. 2

The figure depicts "a cross-sectional view of a flash LED . . ., where TiO2 particles are mixed with the encapsulant." *Id.* ¶ 13. In the figure, reference number "30" refers to "a phosphor layer . . . for wavelength-converting the blue light emitted from the active layer 14"; reference number "32" refers to the "silicone encapsulant"; and reference number "34" refers to TiO2 particles. *See id.* ¶¶ 27, 29, 31.

2. Basin-2005 (Ex. 1006)

Basin-2005 is titled "Color Converted Light Emitting Diode." Ex. 1006, code (54). Basin-2005 teaches "[a] technique for forming a white light LED is disclosed." *Id.* at code (57). Basin-2005 further teaches that "[i]n one embodiment, the LED emits blue light," and "[a] first phosphor for producing red, yellow, yellow-green, or green light is formed to conformably coat the LED die." *Id.* Basin-2005 discloses that "[i]t is assumed the LEDs emit a blue light in the range of 420-490 nm." *Id.* ¶ 30.

3. Krummacher (Ex. 1007)

Krummacher is titled "Optoelectronic Component Having a Luminescence Conversion Layer." Ex. 1007, code (54). Krummacher, too,

is directed to the OFF-state problem mentioned above. *See id.* ¶¶ 3, 4. Krummacher explains that it was known to combine a component that contains an LED that generates blue or UV light with a luminescence conversion layer to convert some of the light to yellow, "such that the blue or ultraviolet radiation emitted by the active region is superimposed on the fraction converted to the complementary color to yield white light." *Id.* ¶¶ 3, 4, 33.

The problem with this approach, Krummacher explains, is that the luminescence conversion layer emits yellow light even when the light-emitting component is in its OFF state, so the surface looks yellow, "which is often found unattractive by observers." *Id.* ¶ 4. Krummacher suggests solving this problem by including scattering particles, "[p]articularly . . . TiO_2 or Al_2O_3." *Id.* ¶ 39; *see id.* code (57); ¶ 6. Krummacher's Figures 1 and 2, reproduced below, are particularly relevant to this case.

FIG 1

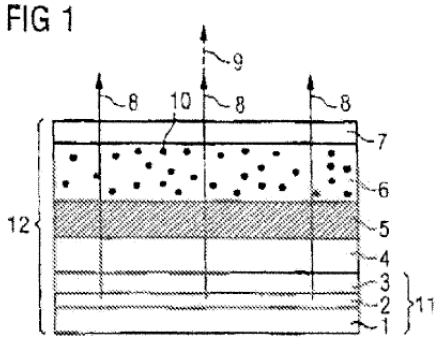

FIG 2

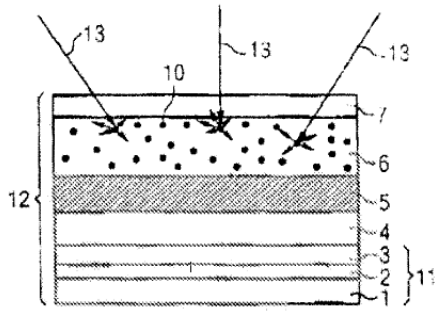

Figures 1 and 2 depict "a schematic graphic representation of a cross section through an optoelectronic component" in the ON and OFF state, respectively. *Id.* ¶¶ 27, 28. In these figures, reference number "5" depicts the "luminescence conversion layer," and reference number "6" depicts the "light-scattering translucent layer." *Id.* ¶¶ 37–39. Krummacher explains

that "the light-scattering translucent layer 6 contains light-scattering particles 10, which, as illustrated in FIG. 2, serve to scatter environmental light 13 striking the optoelectronic component from the outside. . . . Particularly suitable are particles of TiO_2 or $Al2O_3$." *Id.* ¶ 39. According to Krummacher, "the distribution, size and material of the light-scattering particles 10 in light-scattering translucent layer 6 are selected such that the surface of light scattering translucent layer 6 appears white," and "the luminescence conversion layer 5 is advantageously prevented from exhibiting a yellowish hue, in the off state of the optoelectronic component depicted in FIG. 2." *Id.* ¶ 41.

4. Stokes (Ex. 1008)

Stokes is titled "Solid State Illumination System Containing a Light Emitting Diode, a Light Scattering Material and a Luminescent Material." Ex. 1008, code (54). Stokes "relates generally to a white light illumination system, and specifically to a solid state lamp containing a semiconductor light emitting diode ('LED') or laser diode, a light scattering material, and a luminescent phosphor or dye material." *Id.* at 1:11–15.

Stokes explains that "LEDs are used in a number of commercial applications such as automotive, display, safety/emergency and directed area lighting," and that "[r]ecently, a white light emitting lamp was developed which includes a blue light emitting diode and a yellow emitting phosphor." *Id.* at 1:18–22. According to Stokes, "[t]he blue light emitted by the LED excites the phosphor, causing it to emit yellow light," and "[t]he blue light emitted by the LED is transmitted through the phosphor and is mixed with the yellow light emitted by the phosphor." *Id.* at 1:31–35. Stokes explains that "[t]he viewer perceives the mixture of blue and yellow light as white light." *Id.* at 1:35–38. However, according to Stokes, "these white LED

lamps suffer from the undesirable halo effect and the penumbra effect." *Id.* at 1:36–38.

Stokes explains that the halo effect occurs due to the separation of blue and yellow light as the LED emits blue light in a directional, anisotropic fashion and the phosphor emits yellow light isotropically (i.e., in all directions). *Id.* at 1:39–42. Therefore, according to Stokes, when the light output is viewed straight on, it appears bluish white, but when the light output is viewed at an angle, the light appears yellowish. *Id.* at 1:42–47. Stokes further explains that when the light output is directed onto a flat surface, it appears as a yellowish halo surrounding a bluish area. *Id.* at 1:48–50. Stokes indicates that "[t]he penumbra effect is similar to the halo effect, except that the halo effect is a color separation effect, while the penumbra effect is a non-uniform intensity effect." *Id.* at 1:51–53. Stokes explains that "[t]he penumbra effect causes the white LED lamp emission to appear brighter at the center than at the edges." *Id.* at 1:53–55.

Stokes teaches "in order to obtain a significant decrease in the halo and/or penumbra effects, [a] radiation scattering material is placed between the radiation source, such as an LED or a laser diode, and the luminescent material, such as a phosphor or a dye." *Id.* at 3:57–61. According to Stokes, "[w]hen the radiation scattering material is placed between the radiation source and the luminescent material, the radiation source radiation being scattered isotropically, is made substantially uniform and diffuse prior to being incident on the phosphor," and "the lamp emits white light with high far field color and intensity uniformity." *Id.* at 3:63–4:2.

Stokes discloses, in one preferred embodiment, that "the radiation scattering particles have a size such that the particles preferentially scatter blue or UV LED light as compared to yellow, green, red or white light from

the luminescent material." *Id.* at 7:1–4. Figure 6 of Stokes is reproduced below.

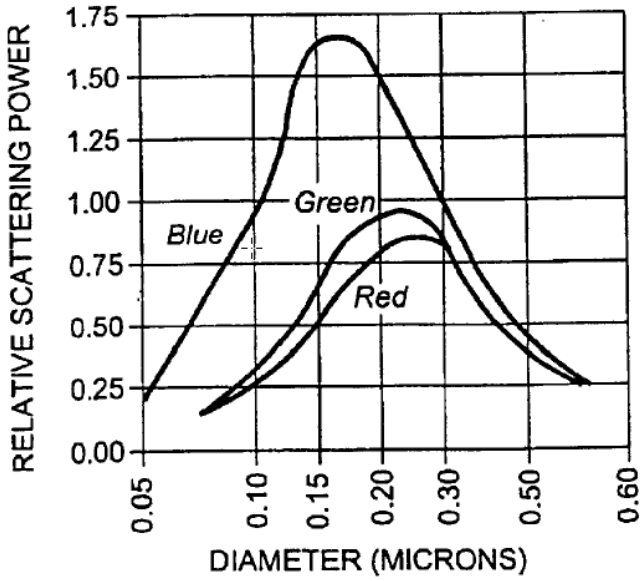

Figure 6 of Stokes "illustrates the relationship between the particle diameter and the wavelength of the Scattered light for Ti-Pure(R) rutile TiO_2 particles made by DuPont." *Id.* at 7:7–9. Stokes explains that

> As illustrated in FIG. 6, the relative scattering power of 100 to 200 nm TiO_2 particles is above 1 for blue incident radiation, while it is below 1 for green and red incident radiation. Therefore, as illustrated in FIG. 6, 100 to 200 nm particles have at least a 50% greater scattering power for blue radiation (i.e., Such as that emitted by a blue emitting LED) than green or red (or for that matter yellow) radiation (i.e., Such as that emitted by the phosphor or dye). This particle size range is advantageous because it enhances the scattering of the radiation source radiation while it decreases the amount of scattering of the luminescent material radiation.

Id. at 7:9–22.

5. Shimizu (Ex. 1010)

Shimizu is titled "Light Emitting Device Having a Nitride Compound Semiconductor and a Phosphor Containing a Garnet Fluorescent Material."

Ex. 1010, code (54). Shimizu discloses "a light emitting device (LED) comprising a phosphor, which converts the wavelength of light emitted by a light emitting component and emits light." *Id.* at 1:15–17.

Shimizu discloses a molding material that has the function to protect the light emitting component, a conductive wire, and a coating material which contains phosphor from external disturbance. *Id.* at 16:59–62. According to Shimizu, "it is preferable that the molding material . . . further contain a dispersant, which can unsharpen the directivity of light from the light emitting component . . ., resulting in increased angle of view." *Id.* at 16:62–66.

Shimizu explains that "adding the dispersant and/or a coloration agent in the molding material has the effects of masking the color of the fluorescent material." *Id.* at 17:25–28. According to Shimizu, "the fluorescent material absorbs blue component of extraneous light and emits light thereby to give such an appearance as though colored in yellow," but "the dispersant contained in the molding material gives milky white color to the molding material and the coloration agent renders a desired color." *Id.* at 17:29–34. Thus, Shimizu explains, "the color of the fluorescent material will not be recognized by the observer." *Id.* at 17:34–35.

6. Hussell (Ex. 1011)

Hussell is titled "Semiconductor Light Emitting Apparatus Including Elongated Hollow Wavelength Conversion Tubes and Methods of Assembling Same." Ex. 1011, code (54).

Hussell discloses a "semiconductor light emitting apparatus includes an elongated hollow wavelength conversion tube that includes an elongated wavelength conversion tube wall having wave length conversion material, such as phosphor, dispersed therein." *Id.* at code (57). Hussell explains that

high efficiency white light production may be obtained by causing almost all of the light that is emitted by a semiconductor light emitting device to strike the elongated wavelength conversion tube wall 112 at an oblique angle. *Id.* ¶ 38.

Hussell indicates that various embodiments may be "regarded as providing a semiconductor light emitting filament that may be analogized to the filament of a conventional incandescent lamp or to a miniature fluorescent bulb." *Id.* ¶ 52. According to Hussell, a bulb and a screw-type base may be provided, so that the combination of the elongated hollow wavelength conversion tube and packaged semiconductor light emitting devices at opposite ends thereof provides a filament for a drop-in replacement for an incandescent bulb. *Id.*

7. Van Woudenberg (Ex. 1020)

Van Woudenberg is titled "LED Based Luminaire and Lighting Device." Ex. 1020, code (54). Van Woudenberg relates to a lighting device comprising a phosphor coated light emitting diode ("pc-LED"). *Id.* at code (57), 1:9–10.

According to Van Woudenberg, "[t]he distinguished yellowish appearance of pc-LEDs and the luminaire in their functional off state is in a large number of applications a disturbing feature." *Id.* at 1:27–28.

Van Woudenberg discloses "a lighting device that still provides a very minute amount of light in the functional off state of the device," noting that "this amount of light is so small that the device in this functional off state can in almost all practical circumstances not be used for its intended purpose." *Id.* at 2:17–19. Van Woudenberg explains that

> [a]s a result of the residual current running through the pc-LED in the functional off state of the lighting device, the tiny amount

> of light produced by the pc-LED outshines the reflected ambient light—which due to the optical characteristics of the phosphor is filtered to become yellowish—from the pc-LED. Hence, the pc-LED will appear to have a neutral white color to the human eye.

Id. at 2:19–23.

E. *Credibility of Dr. Doolittle*

Patent Owner argues that we should give no weight to Dr. Doolittle's testimony because, "[o]n cross examination, Prof. Doolittle repeatedly contradicted himself, dodged questions, and tried to shoehorn new and non-responsive opinions into his answers to Patent Owner's questions." PO Resp. 25. Patent Owner raises two major complaints about Dr. Doolittle. First, Patent Owner argues that he took inconsistent positions by asserting in these IPR proceedings that the claims were entitled to their plain and ordinary meaning, while in the parallel district court proceeding, asserting that certain claim terms were indefinite. *Id.* at 26–28. Second, Patent Owner argues that Dr. Doolittle "repeatedly dodged questions and tried to shoehorn new and nonresponsive opinions into his answers to Patent Owner's questions," and that "[d]uring cross examination Patent Owner was forced to object to Prof. Doolittle's nonresponsive answers no less than eighteen times." *Id.* at 28.

We strongly disagree with Patent Owner's characterization of Dr. Doolittle's testimony. We have reviewed the entirety of both of Dr. Doolittle's depositions. We are impressed with his forthrightness, candor, and good humor in the face of Patent Owner's counsel's aggressive questioning. Contrary to Patent Owner's assertions, we find that his testimony was well-reasoned, forthright, honest, and entitled to significant weight. Dr. Doolittle explained the different claim construction positions

that he took in district court versus the Board. *See* Ex. 2025, 40:3–41:19. We also strongly disagree that Dr. Doolittle's answers were nonresponsive or "evasive" as Patent Owner argues. Patent Owner's numerous attempts to "strike" portions of his testimony belie Dr. Doolittle's efforts to honestly and in good faith respond to Patent Owner's counsel's questions. Ex. 2025, 22:10–23:15, 25:9–26:14, 30:14–22, 40:3-9, 58:12–59:1, 60:18–61:13, 65:1–10, 83:15–84:16, 92:15–95:20, 96:18–99:9, 102:22–106:16, 135:3–136:22. An answer is not "non-responsive" simply because it does not conform to the conclusion you want or undermines the logic underlying your questioning. Dr. Doolittle explained his answers and addressed the issues Patent Owner asked about. Accordingly, we decline Patent Owner's invitation to give Dr. Doolittle's testimony no weight. Instead, we assess Dr. Doolittle's testimony on a case-by-case basis as discussed below.

F. *Secondary Considerations of Non-obviousness*

Objective evidence of nonobviousness includes: (1) commercial success, (2) copying, (3) industry praise, (4) skepticism, (5) long-felt but unsolved need, and (6) failure of others. *See, e.g.*, *Transocean Offshore Deepwater Drilling, Inc. v. Maersk Drilling U.S., Inc.*, 699 F.3d 1340, 1349–56 (Fed. Cir. 2012). When presented, objective indicia or secondary considerations "must always . . . be considered in the overall obviousness analysis." *Adapt Pharma Operations Ltd. v. Teva Pharms. USA, Inc.*, 25 F.4th 1354, 1372 (Fed. Cir. 2022). However, "a strong showing of obviousness may stand even in the face of considerable evidence of [secondary considerations]." *Id.*

1. Nexus

In order for secondary considerations to be awarded "substantial weight" "in an obviousness analysis," the Federal Circuit advised that the

"secondary considerations must have a nexus to the claims." *Fox Factory, Inc. v. SRAM, LLC*, 944 F.3d 1366, 1373 (Fed. Cir. 2019) (internal quotations omitted). The Federal Circuit further instructed that "[t]he patentee bears the burden of showing that a nexus exists." *Id.* (quoting *WMS Gaming Inc. v. Int'l Game Tech.*, 184 F.3d 1339, 1359 (Fed. Cir. 1999)). Finally, the Federal Circuit instructs that "[t]o determine whether the patentee has met that burden, we consider the correspondence between the objective evidence and the claim scope." *Id.* (quoting *Henny Penny Corp. v. Frymaster LLC*, 938 F.3d 1324, 1332 (Fed. Cir. 2019)).

"A showing of nexus can be made in two ways: (1) via a presumption of nexus, or (2) via a showing that the evidence is a direct result of the unique characteristics of the claimed invention." *Volvo Penta of the Ams., LLC v. Brunswick Corp.*, 81 F.4th 1202, 1210 (Fed. Cir. 2023). A rebuttable presumption of nexus arises "when the patentee shows that the asserted objective evidence is tied to a specific product and that product 'embodies the claimed features, and is coextensive with them.'" *Fox Factory*, 944 F.3d at 1373 (quoting *Polaris Indus., Inc. v. Arctic Cat, Inc.*, 882 F.3d 1056, 1072 (Fed. Cir. 2018)). Whether a rebuttable presumption of nexus arises "turns on the nature of the claims and the specific facts." *Teva Pharms. Int'l GmbH v. Eli Lilly & Co.*, 8 F.4th 1349, 1362 (Fed. Cir. 2021).

Patent Owner contends that it is entitled to a presumption of a nexus because "[e]ach of the . . . secondary considerations [identified by Patent Owner] is directly related to white filament style light emitting devices including Petitioners' products that practice the claimed invention." PO Resp. 51 (citing Ex. 1018; Ex. 1037; Ex. 1038; Ex. 1039). In its Sur-Reply, Patent Owner also contends that it has shown a nexus because the secondary considerations evidence is a "direct result of the unique characteristics of the

claimed invention." Sur-Reply 13 (quotations omitted). Patent Owner argues that "[e]ach of the enumerated secondary considerations is directly related to the success of and market praise for light emitting devices with an improved OFF state white appearance, including Petitioners' products that practice the claimed invention." *Id.* at 13–14 (citing Ex. 1018; Ex. 1037; Ex. 1038; Ex. 1039). Patent Owner submits that "customers will pay more for a bulb that looks white in the OFF state than they will pay for exactly the same bulb that looks yellow in the OFF state." *Id.* at 14 (citing Ex. 2035; Ex. 2036; Ex. 2026 ¶ 138).

We find that Patent Owner has failed to show that it is entitled to a presumption of a nexus. The only evidence cited by Patent Owner to establish a presumption of a nexus are Exhibits 1018, 1037, 1038, and 1039. But these exhibits do not relate to Patent Owner's products. Instead, they map Petitioner's products to the challenged claims, not Patent Owner's. Thus, we find that Patent Owner has failed to show that its products embody the claimed features and are coextensive with them.

We also find that Patent Owner has failed to show a nexus independent of the presumption of a nexus. Patent Owner identifies the unique characteristic of the '678 patent as "an improved OFF state white appearance." Sur-Reply 13. Patent Owner points to Exhibit 2035, a webpage sales listing from the Home Depot website for the Feit Electric White Filament LED Light Bulbs, to support its contention that these bulbs appear "white in the OFF state." *Id.* at 14 (citing Ex. 2035). Setting aside that Patent Owner has provided no evidence that the Feit White Filament LED Bulbs are covered by the claims of the '678 patent, there is one significant problem with Patent Owner's nexus evidence—improved OFF state white appearance was already present in the prior art. A nexus may not

exist where, for example, the merits of the claimed invention were "readily available in the prior art." *Richdel, Inc. v. Sunspool Corp.*, 714 F.2d 1573, 1580 (Fed. Cir. 1983); *see also Tokai Corp. v. Easton Enters., Inc.*, 632 F.3d 1358, 1369 (Fed. Cir. 2011)l *Yita LLC v. MacNeil IP LLC*, 69 F.4th 1356, 1364 (Fed. Cir. 2023); *ClassCo, Inc. v. Apple, Inc.*, 838 F.3d 1214, 1220 (Fed. Cir. 2016). For example, Basin-2007 and Krummacher teach an LED with an improved white appearance in the OFF state (Ex. 1005 ¶ 35; Ex. 1007 ¶ 3, 4). Thus, we find that Patent Owner has failed to show that there is a nexus between the objective evidence and the claimed invention.

2. Long-Felt Need

"Evidence of a long felt but unresolved need tends to show non-obviousness because it is reasonable to infer that the need would have not persisted had the solution been obvious." *WBIP, LLC v. Kohler Co.*, 829 F.3d 1317, 1332 (Fed. Cir. 2016). "Establishing long-felt need requires objective evidence that an art-recognized problem existed in the art for a long period of time without solution." *Ex Parte Jellá*, 90 USPQ2d 1009, 1019 (BPAI 2008) (precedential).

Patent Owner argues that "[t]he '678 Patent itself identifies the long-felt need for the claimed invention." PO Resp. 48. Patent Owner submits that "the '678 Patent explained that 'there is a need for an improved approaches to implement LED lighting apparatuses . . . which also addresses the non-white color appearance of the LED lighting apparatuses while in an OFF state.'" *Id.* (citing Ex. 1001, 2:46-52; Ex. 2037; Ex. 2026 ¶ 139). Patent Owner contends that this long-felt need demonstrates the nonobviousness of the claimed invention. *Id.*

We find that Patent Owner has not shown sufficient evidence to establish that there was a long-felt need. Patent Owner cites two pieces of

evidence to support its contention that there was a long-felt need. First, it cites statements in the Specification asserting that

> Therefore, there is a need for improved approaches to implement LED lighting apparatuses that maintains the desired color properties of the devices, but without requiring the large quantities of photoluminescent materials (e.g. phosphor materials) that are required in the prior approaches. In addition, there is a need for an improved approach to implement LED lighting apparatuses which addresses perceptible variations in color of emitted light with emission angle, and which also addresses the non-white color appearance of the LED lighting apparatuses while in an OFF state.

Ex. 1001, 2:46–52.

A "long-felt need is analyzed as of the date of an articulated identified problem and evidence of efforts to solve that problem." *Texas Instruments Inc. v. Int'l Trade Comm'n*, 988 F.2d 1165, 1178 (Fed. Cir. 1993). The statement in the '678 patent provides nothing that would establish any date when "an articulated identified problem" existed. Moreover, we note that the mere passage of time, does not, by itself, sufficient to establish a long-felt need. *See Iron Grip Barbell Co., Inc. v. USA Sports, Inc.*, 392 F.3d 1317, 1325 (Fed. Cir. 2005) ("Absent a showing of long-felt need or the failure of others, the mere passage of time without the claimed invention is not evidence of nonobviousness."). Thus, this statement does not amount to "objective evidence that a recognized problem existed in the art for a long period of time without solution," as required to establish a long-felt need. *See Vandenberg v. Dairy Equip. Co.*, 740 F.2d 1560, 1567 (Fed. Cir. 1984).

Exhibit 2037 provides no assistance in this regard. Patent Owner contends that Exhibit 2037 "express[es] a need for white filament lighting devices." PO Resp. 48. Exhibit 2037 is a post the "r/lighting" forum on the website reddit.com. Ex. 2037, 1. Exhibit 2037 does not contain any date,

but the post indicates it is from "5 yr. ago" and seeks information about whether "white filament LED Edison bulbs exist." *Id.* As an initial matter, it is unclear when exactly this post is from. Patent Owner has provided no evidence in that regard. Assuming that Exhibit 2037 is from approximately five years before it was filed as an exhibit (i.e., 2020), we find that it is not probative of long-felt need because it is nearly 10 years after the priority date of the '678 patent. *See Vandenberg*, 740 F.2d at 1567. Moreover, we note that it does not express a need merely for LED bulbs that appear white in the off state, but Edison-style LED lightbulb filaments that appear white, which is not commensurate with the scope of the claims in this case.

Finally, Patent Owner cites to paragraph 139 of Dr. Schubert's declaration, but that merely states "I understand that consumers express a need for white filament products over the traditional yellow filament counterparts." Ex. 2026 ¶ 139 (citing Ex. 2037). However, this merely relies on Exhibit 2037, and suffers from the same deficiencies discussed with respect to that exhibit. Thus, regardless of nexus, we give no weight to Patent Owner's evidence of long-felt need.

3. Commercial Success

"When a patentee can demonstrate commercial success, usually shown by significant sales in a relevant market, and that the successful product is the invention disclosed and claimed in the patent, it is presumed that the commercial success is due to the patented invention." *J.T. Eaton & Co. v. Atlantic Paste & Glue Co.*, 106 F.3d 1563, 1571 (Fed. Cir. 1997).

Patent Owner contends that "[s]ince the first introduction of its patented white-filament bulbs, Patent Owner has prominently advertised the feature in its marketing and sales materials." PO Resp. 48 (citing Ex. 2032; Ex. 2033, Ex. 2034; Ex. 2026 ¶ 137). Patent Owner argues that "Retailers

who sell Patent Owner's patented products have likewise emphasized the white filaments." *Id.* (citing Ex. 2029 (indicating that "[t]hese clear glass LED bulbs with exposed white filament offer a sleek aesthetic that easily assimilates into any home décor style. Where traditional clear glass LED bulbs stand out with their yellow filaments, these bulbs contain a discreet, white-colored core that blends in better, while still providing a smooth glow meant for chandeliers, pendants, and lamps without shades."), Ex. 2031, Ex. 2035; Ex. 2026 ¶¶ 136, 138. Patent Owner asserts that "[t]hose retailers have also priced Patent Owner's patented products at a premium compared to similar bulbs with yellow filaments, demonstrating that customers desire and appreciate the white filament and are willing to pay more for it." *Id.* at 49 (citing Ex. 2035 (Patent Owner's white-filament product priced at $29.97); Ex. 2036 (similar yellow-filament product priced at $21.97); Ex. 2026 ¶ 138).

Commercial success requires a nexus to the claimed invention. *Transocean*, 699 F.3d at 1350. As we discussed above, Patent Owner has failed to show any nexus between the evidence offered and the claimed invention. However, even if Patent Owner had shown a nexus, we would give this evidence little weight. The mere difference in price, at one retailer, is very weak evidence of commercial success. Patent Owner provides no sales figures, no market share figures, or any other evidence that would give the context that would lead us to give significant weight to the alleged commercial success. *See Tec Air, Inc. v. Denso Mfg. Mich. Inc.*, 192 F.3d 1353, 1360–61 (Fed. Cir. 1999) ("Although sales figures coupled with market data provide stronger evidence of commercial success, sales figures alone are also evidence of commercial success.").

4. Industry Praise

"Evidence that the industry praised a claimed invention or a product that embodies the patent claims weighs against an assertion that the same claimed invention would have been obvious." *Apple Inc. v. Samsung Elecs. Co., Ltd.*, 839 F.3d 1034, 1053 (Fed. Cir. 2016) (en banc). "Industry participants, especially competitors, are not likely to praise an obvious advance over the known art. Thus, if there is evidence of industry praise of the claimed invention in the record, it weighs in favor of the non-obviousness of the claimed invention." *Id.*; *see also Institut Pasteur & Universite Pierre Et Marie Curie v. Focarino*, 738 F.3d 1337, 1347 (Fed. Cir. 2013) ("[I]ndustry praise . . . provides probative and cogent evidence that one of ordinary skill in the art would not have reasonably expected [the claimed invention]."); *Power–One, Inc. v. Artesyn Techs., Inc.*, 599 F.3d 1343, 1352 (Fed. Cir. 2010) (noting that industry praise, and specifically praise from a competitor, tends to indicate that the invention would not have been obvious).

To show industry praise, Patent Owner submits that "Home Depot last year announced Patent Owner's patented white-filament bulbs as one of its 2024 Innovation Awards Winners, specifically emphasizing that they 'help create a timeless look by blending into any décor with lower profile white filaments.'" PO Resp. 49 (citing Ex. 2031; Ex. 2026 ¶ 136). Patent Owner also points to "[i]ndustry forums" that "tout the benefits of Patent Owner's white filament products, noting that '[t]he white filaments make the bulb look less obtrusive when it's off.'" *Id.* (citing Ex. 2030). Patent Owner argues that "[t]his is the very response the '678 Patent inventors sought to achieve." *Id.* (citing Ex. 1001, 11:15–22).

We find that Patent Owner's evidence of industry praise is entitled to little weight. First, as discussed above, Patent Owner has failed to show that there is a nexus between the challenged claims and the products that were the subject of the alleged praise. Second, even if a nexus was shown, none the evidence of industry praise submitted by Patent Owner is entitled to significant weight.

Patent Owner cites Dr. Schubert's declaration, but that declaration merely repeats what is stated in other exhibits without any additional analysis, so we will focus on those other exhibits rather than Dr. Schubert's declaration. *See* Ex. 2026 ¶¶ 136, 137.

Patent Owner cites Exhibit 2030, which consists of posts from an internet forum called "Candle Power Flashlight Forum" titled "Feit LED filament bulb with white filaments," dated between December 18, 2022 and January 8, 2023. One of the posts mentions that "[t]he white filaments make the bulb look less obtrusive when it's off—it kind of blends into the surroundings. Interesting concept." Ex. 2030, 1. Another post states "[i]t probably won't be long before other manufacturers copy this design." *Id.* There is a final post that states that the poster "found the patent that describes what's going on here." *Id.* However, it is unclear from the post what patent the poster is referring to.[11]

We find that, even if Patent Owner had shown a nexus between the Feit bulbs in question and the challenged patent, Exhibit 2030 is not entitled

[11] We note that clinking on the link in Dr. Schubert's declaration (Ex. 2026 ¶ 136) takes you to the post shown in Exhibit 2030, and, based on our review of the actual post, the patent referenced is Canadian Patent Application 3 021 307 A1 (published Apr. 27, 2019), which is not related to the challenged patent and lists GE Lighting Solutions LLC as the applicant.

to substantial weight as industry praise. Exhibit 2030 only includes posts by two anonymous users that calls the white filament bulb, "an interesting concept." *Id.* Although the poster does mention that they found "the patent that describes what's going on here," Exhibit 2030 does not mention to what patent the poster is referring. Thus, we find this alleged praise entitled to little weight.

Patent Owner also cites Exhibit 2031, which is a webpage of a new release from Home Depot, which is titled "The Home Depot Announces 2024 Innovation Award Winners," and is dated October 9, 2024. The press release begins by stating "The Home Depot announced the winners of its annual Innovation Awards, recognizing products that have transformed the home improvement landscape," and "[t]his year's winners represent a cross-array of innovation that have provided unparalleled benefits to both Pro and DIY customers." Ex. 2031, 1. The press release also mentions that "[i]n addition to the top award-winners, the following products received honorable mentions for the benefits they bring to Home Depot customers." *Id.* Among the products listed as "honorable mentions" is "Feit White Filament LED," which are described as "help[ing] create a timeless look by blending into any décor with lower profile white filaments." *Id.* Patent Owner provides no information about the criteria or basis of selection for the Home Depot Innovation Awards. Thus, it is difficult to assess the significance of this award. As discussed above, OFF state white appearance was known in the prior art. *See, e.g.*, Ex. 1005 ¶ 35; Ex. 1007 ¶¶ 3, 4. Moreover, we agree with Petitioner that the praise here is more tied to the aesthetic of the filament or "Edison" style light bulbs. *See* Reply 13–14. Thus, we find that this award is entitled to little weight.

Finally, Dr. Schubert's declaration also cites to Exhibits 2032, 2033, and 2034, which he cites as support for his contention that "various consumers have reacted positively to Patent Owner's white filament products." *See* Ex. 2026 ¶ 137 (citing Exs. 2032, 2033, 2034). Exhibits 2032, 2033, and 2034 are Feit Electric Instagram posts touting the company's white filament products. *See* Exs. 2032, 2033, 2034. Exhibit 2034 includes advertising statements that tout the white filaments and picture purporting compare yellow filament and white filament bulbs. *See* Ex. 2034. Exhibits 2032 and 2033 include alleged user comments instead of the comparison picture. Exs. 2032, 2033. Exhibit 2032 reproduces what an alleged five-star review by "HomeDepotCustomer" stating "[y]ou can barely see the filament . . . in this case it's a good thing to overlook the product." Ex. 2032. Exhibit 2033 includes a five-star review from "Barbara B." stating "[f]inally, someone figured out that yellow filaments in a bulb look awful when not lit!" Ex. 2033. We find these selected anonymous reviews from posts that are essentially advertisements to be entitled to little weight as industry praise. It is unclear whether these reviews are even real customers or simply generated for these advertisements and it is unclear whether these comments are representative or simply outliers. Thus, we give this evidence little weight as industry praise.

5. Copying

Copying by a competitor is a relevant consideration in the secondary considerations analysis. *Iron Grip Barbell*, 392 F.3d at 1325. "Copying requires duplication of features of the patentee's work based on access to that work, lest all infringement be mistakenly treated as copying." *Institut Pasteur*, 738 F.3d at 1347–48. Evidence of copying may include internal

documents, direct evidence such as photos of patented features or disassembly of products, or access and similarity to a patented product. *Iron Grip Barbell*, 392 F.3d at 1325.

"[C]opying requires the replication of a specific product." *Id.* And a "competing product that arguably fa[l]ls within the scope of a patent" is not necessarily evidence of copying. *Id.* "Otherwise every infringement suit would automatically confirm the nonobviousness of the patent." *Id.* Thus, "if the only evidence of copying was a competitor's abandonment of one product design and subsequent adoption of a design similar to that of a patented product after issuance of the patent, that did 'not establish that [the competitor] engaged in copying.'" *Liqwd, Inc. v. L'Oreal USA, Inc.*, 941 F.3d 1133, 1137 (Fed. Cir. 2019). In other words, more is needed than merely showing that similarity exists between the patent and the competitor's accused product. *See id.*

Patent Owner argues that "the subject proceeding was filed in response to district court actions asserting the '678 Patent against Petitioners' products." PO Resp. 50 (citing Pet. 16–17). Patent Owner contends that "Petitioners' accused white filament products all infringe the '678 patent, all were introduced after Patent Owner's patented products, and all mirror Patent Owner's own white filament design." *Id.* (citing Exs. 1018, 1037, 1038, 1039). Patent Owner submits that "[t]his copying of the invention shows that the challenged claims are not obvious," and "[i]f the claims were obvious as Petitioners claim, then Petitioners would have introduced their competing products years earlier to meet the long-felt need." *Id.*

Patent Owner's evidence and attorney argument are insufficient to show copying. Patent Owner provides no comparison between its products

and the accused products. Without even this foundation, we give no weight to Patent Owner's attorney argument of copying.

6. Unexpected Results

Patent Owner argues that "Petitioners assert that the claimed invention is nothing more than the expected result of combining various prior art teachings." PO Resp. 50. Patent Owner contends that "[t]he market shows otherwise," and "[i]f the claimed invention were as obvious and expected as Petitioners contend, then they and others would have introduced white-filament LED bulbs to the market long before 2010 to meet the demonstrated consumer demand." *Id.* (citing Ex. 2029; Ex. 2030; Ex. 2031; Ex. 2032; Ex. 2033; Ex. 2034; Ex. 2037). Patent Owner asserts that "[t]he fact that none of the Petitioners did so demonstrates that the results were unexpected." *Id.*

"[W]hen unexpected results are used as evidence of nonobviousness, the results must be shown to be unexpected compared with the closest prior art." *In re Baxter Travenol Labs.*, 952 F.2d 388, 392 (Fed. Cir. 1991). "It is well settled that unexpected results must be established by factual evidence. Mere argument or conclusory statements in the specification does not suffice." *In re Soni*, 54 F.3d 746, 750 (Fed. Cir. 1995) (quoting *In re De Blauwe*, 736 F.2d 699, 705 (Fed. Cir. 1984)). A showing of "unexpected results" requires that "the claimed invention exhibits some superior property or advantage that a person of ordinary skill in the relevant art would have found surprising or unexpected." *Soni*, 54 F.3d at 750.

Patent Owner's contentions of unexpected results fall well short of these requirements. Patent Owner provides no comparison to any prior art or any factual support besides its contention that no one introduced white-filament LED bulbs before 2010. We cannot conclude that the results were

unexpected when Patent Owner has provided no evidence of what a person of ordinary skill would have expected. *See Pfizer, Inc. v. Apotex, Inc.*, 480 F.3d 1348, 1371 (Fed. Cir. 2007) ("Here, Pfizer's evidence must fail because the record is devoid of any evidence of what the skilled artisan would have expected."). Indeed, the prior art that Petitioner has provided suggests that the dispersion properties of titania were well known, and the use of such particles to obtain an off-state white appearance for LED lightbulbs was also known. *See* Ex. 1005 ¶ 35; Ex. 1007 ¶ 4.

Moreover, Patent Owner's contentions are not commensurate with the scope of the claims. The claims do not require "white filaments" or any "filaments" at all. Thus, Patent Owner's evidence that "white-filament LED bulbs" were not introduced before 2010 has little, if any probative value for the nonobviousness of the challenged claims. *See In re Greenfield*, 571 F.2d 1185, 1189 (CCPA 1978) ("Establishing that one (or a small number of) species gives unexpected results is inadequate proof, for 'it is the view of this court that objective evidence of non-obviousness must be commensurate in scope with the claims which the evidence is offered to support.'" (quoting *In re Tiffin*, 448 F.2d 791, 792, (CCPA 1971))).

7. Summary

As discussed above, we find that Patent Owner has failed to show a nexus between the evidence of secondary considerations and the claimed invention. Moreover, we find that even if a nexus were to be shown, the evidence is entitled to little weight.

G. *Obviousness of Claims 1–3, 6, 7, 9, 10, 16–21, 25, and 26 Over Basin-2007 and Basin-2005*[12]

Petitioner contends that claims 1–3, 6, 7, 9, 10, 16–21, 25, and 26 are unpatentable under 35 U.S.C. § 103(a) as obvious over Basin-2007 and Basin-2005. Pet. 19–39. Patent Owner opposes. PO Resp. 30–36.

1. Petitioner's Contentions

According to Petitioners, "Basin-2007 discloses every element in challenged claims 1–3, 6, 7, 9, 10, 16–21, 25, and 26 with one exception: it does not specifically disclose that the LED chip emits blue light at a wavelength of greater than or equal to 440 nm." Pet. 19. Petitioners argue that LED chips emitting light of this wavelength were well known as taught in Basin-2005. *See id.* Petitioners continue that a person of ordinary skill in the art "would have been motivated to look to the teachings in Basin-2005 to understand the wavelength emitted by the LED chip in Basin-2007 due to the structural similarities between the disclosed LEDS." *Id.* Petitioner argues that "the information obtained from Basin-2005 is no more than the simple substitution of one known element for another to obtain predictable results." *Id.* at 19–20.

Petitioner notes that "Basin-2007 discloses GaN-based LED light sources," *id.* at 24 (citing Ex. 1005 ¶ 2), where "the light emitted by the phosphor layer 30, when mixed with blue light, creates white light or another desired color," and where "the phosphor is a yttrium aluminum oxide garnet (YAG) phosphor that produces yellow light (Y+B=white)." *Id.*

---

[12] In the '260 IPR, Petitioner and Patent Owner make identical arguments regarding the unpatentability and patentability of claim 1 with respect to the combination of Basin-2007 and Basin-2005, so we consider that ground of the '260 IPR together with the identical ground in the '1357 IPR.

(quoting Ex. 1005 ¶ 27). Petitioner contends that a skilled artisan would have expected success given Basin-2005's disclosure that its white-light LED light source is "relatively easy to implement and consistently produces the desired white light temperature." *Id.* at 25 (quoting Ex. 1006 ¶ 6) (citations omitted); *see id.* at 19–20. Citing Shimizu's and Stokes's disclosures of blue-light LEDs with wavelengths greater than or equal to 440 nm, Petitioners argue that a skilled artisan "would understand that the blue light LEDs used in conventional white-light LED light sources typically had wavelengths greater than 440 nm." *Id.* at 24–25 (citing Shimizu "Ex. 1010 figs.; 23:43, 27:4–5, 28:55, 25:24–25, 29:45 (peaks at 450, 460, or 470nm)" and Stokes, "Ex.1008, 4:37–40 (420–480nm), 6:62–67 (peaks of 450nm or 480nm)").

2. Patent Owner's Arguments

Patent Owner argues that Petitioner's arguments are insufficient to show a motivation to combine. *See* PO Resp. 30–31. Patent Owner asserts that the mere similarity in structures is insufficient to establish a motivation to combine. *Id.* at 31. Patent Owner also argues that a POSITA would not be motivated to make the combination proposed because Basin-2007 and Basin-2005 are directed to entirely different LED applications. *Id.* at 32–33. Finally, Patent Owner asserts that "Prof. Doolittle's theory of swapping Basin-2005's LED into the application of Basin-2007 would have been counterintuitive to a POSITA at the time of the invention because it would have resulted in lower light output." *Id.* at 34. Patent Owner submits that the quantum efficiency of LEDs decreases with longer wavelengths. *Id.* (citing Ex. 2026 ¶¶ 43–45, 50, 112–114). Patent Owner contends that "[a] POSITA generally would have been interested in LEDs emitting light at shorter wavelengths (UV and near-UV) where the quantum efficiency is

higher because the LED is more effective at converting electrical input into light particles." *Id.* at 35 (citing Ex. 2026 ¶ 112–114). Thus, Patent Owner argues that "[o]ther than improper hindsight, Petitioners offer no explanation as to why a POSITA would have found it obvious to accept the lower light output that comes with wavelengths longer than 440 nm." *Id.*

3. Analysis

We have reviewed Petitioner's evidence and contentions and find that Petitioner has shown by a preponderance of the evidence the combination of Basin-2007 and Basin-2005 accounts for all the limitations of claims 1–3, 6, 7, 9, 10, 16–21, 25, and 26. *See* Pet. 20–39. Patent Owner does not dispute this. *See* PO Resp. Thus, we focus our analysis on the motivation to combine Basin-2007 and Basin-2005.

We find that Petitioner has shown by a preponderance of the evidence that there is a motivation to combine Basin-2007 and Basin-2005. We note that Basin-2007 already discloses that its device includes a blue LED. *See* Ex. 1005 ¶¶ 3, 12, 17, 22, 27, 40, 41, 42, 44, claim 18. Although silent about the exact wavelength of that LED, Basin-2005 teaches that "[i]t is assumed the LEDs will emit a blue light in the range of 420–490 nm." Ex. 1006 ¶ 30. As the Petition explains, this teaching is corroborated by numerous other references, including, at least, Shimizu and Stokes. *See* Pet. 24–25.

A motivation to combine may be found "explicitly or implicitly in market forces; design incentives; the 'interrelated teachings of multiple patents'; 'any need or problem known in the field of endeavor at the time of invention and addressed by the patent'; and the background knowledge, creativity, and common sense of the person of ordinary skill." *ZUP, LLC v. Nash Mfg., Inc.*, 896 F.3d 1365, 1371 (Fed. Cir. 2018) (quoting *Plantronics,*

Inc. v. Aliph, Inc., 724 F.3d 1343, 1354 (Fed. Cir. 2013)). Here, Petitioner brings in Basin-2005 to provide explicit teaching of the wavelength of Basin-2007's blue LED. The record demonstrates that the wavelength range of blue LEDs was well known and conventional, with a range that overlaps with the claimed range. *See* Pet. 24–25. On its own, this overlap in ranges would be strong evidence of obviousness. *See Galderma Lab'ys, L.P. v. Tolmar, Inc.*, 737 F.3d 731, 738 (Fed. Cir. 2013). As Petitioner explains, Basin-2005 and Basin-2007 share many structural similarities and both generally involve techniques for forming a white-light LED using an LED that emits blue light with a YAG phosphor. *See* Ex. 1006 ¶ 11. We find that a person of ordinary skill in the art would be encouraged to turn to Basin-2005 to select a wavelength for the blue light for the "conventional white light LED," Ex. 1005 ¶ 21, in Basin-2007. *See Realtime Data LLC v. Iancu*, 912 F.3d 1368, 1374 (Fed. Cir. 2019) (finding a motivation to combine where a POSITA would be encouraged to look to reference understand and interpret another reference's teachings). Thus, we find that Petitioner has shown by a preponderance of the evidence that there would be a motivation to combine Basin-2007 and Basin-2005.

Patent Owner's arguments to the contrary are not availing. First, as we explain above, we disagree with Patent Owner that Petitioner failed to explain why a person of ordinary skill would combine Basin-2007 and Basin-2005. PO Resp. 32. Second, we disagree with Patent Owner that the different LED applications of Basin-2007 and Basin-2005 would dissuade a person of ordinary from combining these references. As an initial matter, "[t]he test for obviousness is not whether the features of a secondary reference may be bodily incorporated into the structure of the primary reference." *Allied Erecting & Dismantling Co. v. Genesis Attachments*,

LLC, 825 F.3d 1373, 1381 (Fed. Cir. 2016). Thus, it is irrelevant whether the precise LED from Basin-2005 can be incorporated into Basin-2007. Patent Owner focuses on the Petition's use of "substitution" to characterize Petitioner's theory as "swapping Basin-2005's LED into the application of Basin-2007." *See* PO Resp. 34. But Patent Owner ignores what the Petition actually says, which is "the *information* [i.e., wavelength] from Basin-2005 is no more than the simple substitution of one known element for another to obtain predictable results." Pet. 19–20 (emphasis added); *see also id.* at 25 ("A POSA would have been motivated to use a white-light LED light source disclosed by Basin-2005 as the 'conventional white light LED' called for by Basin-2007."). Thus, we do not read the Petition as proposing physically swapping the LEDs, as Patent Owner argues, but instead incorporating the well-known wavelength teachings from Basin-2005 into Basin-2007.

Finally, we do not agree with Patent Owner that "quantum efficiency" would have dissuaded a person of ordinary skill from making the combination. PO Resp. 34–36. To begin with, "[i]t's not necessary to show that a combination is the best option, only that it be a suitable option." *Intel Corp. v. Qualcomm Inc.*, 21 F.4th 784, 800 (Fed. Cir. 2021). Here, as demonstrated by, at least, Basin-2005, Shimizu, and Stokes, blue LEDs in this wavelength range were known to work as light sources for white-light LEDs. *See* Pet. 25–26. Additionally, we find persuasive Petitioner's evidence that a person of ordinary skill in the art would not have been concerned solely with quantum efficiency, but also with overall luminous efficacy of a complete white LED package. Reply 19. As Dr. Schubert's textbook explains,

> A fundamental drawback of UV pumped white LEDs is the energy loss (Stoke's shift). The potential luminous efficacy of

> UV pumped white LED lamps is, therefore, markedly lower than that of white sources based on a blue LED exciting a yellow phosphor.

Ex. 2014, 358–59; *see also* Ex. 1048, 87:5–88:4 (acknowledging Stokes shift).

Thus, the evidence shows that, whatever gain in quantum efficiency a lower wavelength might offer, there were other drawbacks that a person of ordinary skill would have to balance. But "a given course of action often has simultaneous advantages and disadvantages, and this does not necessarily obviate motivation to combine." *Medichem, S.A. v. Rolabo, S.L.*, 437 F.3d 1157, 1165 (Fed. Cir. 2006). Indeed, Petitioner has shown several references—including, Basin-2005, Shimizu, and Stokes—that made this tradeoff. Moreover, "[o]bviousness does not require absolute predictability of success. . . . [A]ll that is required is a reasonable expectation of success." *In re O'Farrell*, 853 F.2d 894, 903–04 (Fed. Cir. 1988). We find that the prior art of record demonstrates that a person of ordinary skill in the art at the time of the invention would have such an expectation in making the combination of Basin-2007 and Basin-2005. Accordingly, we find that Petitioner has shown by a preponderance of the evidence that there would have been motivation to combine Basin-2007 and Basin-2005 with a reasonable expectation of success.

4. Summary

We have reviewed Petitioner's contentions regarding claims 1–3, 6, 9, 10, 16–21, and 25 (Pet. 19–53), and find that Petitioner has shown by a preponderance of the evidence that Basin-2007 and Basin-2005 teach the limitations of those claims, and that there would have been a motivation to combine the references in the manner suggested with a reasonable

expectation of success. We find that Patent Owner's evidence of secondary considerations does not outweigh the strong showing of obviousness. Accordingly, we find that Petitioner has shown by a preponderance of the evidence that claims 1–3, 6, 9, 10, 16–21, and 25 would have been obvious over Basin-2007 and Basin-2005.

H. *Obviousness of Claims 11–14 Over Basin-2007, Basin-2005, and Stokes*

Petitioner contends that claims 11–14 are unpatentable under 35 U.S.C. § 103(a) as obvious over Basin-2007, Basin-2005, and Stokes. '260 IPR Pet. 35–47. Claim 11 depends from claim 1, and further requires "wherein the light scattering material has an average particle size that is selected such that the light scattering material will scatter the excitation light relatively more than the light scattering material will scatter light generated by the at least one photoluminescence material." Ex. 1001, 26:56–61. Claims 12 and 13 depend from claim 11, and require "wherein the light scattering material scatters the excitation light at least twice as much as light generated by the at least one photoluminescence material" and "wherein the excitation light comprises blue light," respectively. *Id.* at 26:63–67. Claim 14 depends from claim 13, and requires "wherein the light scattering material has an average particle size that is less than about 150 nm." *Id.* at 27:1–3.

Petitioner notes that it explained in the ground based on Basin-2007 and Basin-2005 how those references render obvious the subject matter of claim 1. '260 IPR Pet. 35. Petitioner explains that this ground, based on Basin-2007, Basin-2005, and Stokes, further includes the teaching from Stokes that selecting an appropriate particle size "enhances the scattering of the radiation source radiation while it decreases the amount of scattering of

the luminescent material radiation" such that "the lamp radiation output is rendered more uniform because a greater amount of radiation source radiation is scattered toward the luminescent material[.]" *Id.* (citing Ex. 1008, 7:10–26). Petitioner notes that Stokes teaches that its particles are sized such that they preferentially scatter blue light. *Id.* at 36–37 (citing Ex. 1008, 7:1–4, Fig. 6; '260 IPR Ex. 1022 ¶ 43). Petitioner submits that "Basin-2007 discloses a light scattering material with an average TiO_2 particle size that is 'sub-micron' (less than 1000 nm). *Id.* at 37 (citing Ex. 1005 ¶ 5). Petitioner notes that Basin-2007 "further discloses that '[i]n one embodiment, the average TiO_2 particle size is 0.25 micron[(250 nm).]'" *Id.* (citing Ex. 1005 ¶ 32). Petitioner asserts that "[a]ccording to the DuPont model, TiO_2 particles smaller than a micron generally scatter more blue light (e.g., excitation light) than red or green light (e.g., light emitted by the phosphor), including at 0.25 microns." *Id.* ('260 IPR Ex. 1022 ¶ 44). Petitioner submits that Stokes discloses:

> [The relevant] particle size range is advantageous because it enhances the scattering of the radiation source radiation while it decreases the amount of scattering of the luminescent material radiation. Therefore, the lamp radiation output is rendered more uniform because a greater amount of radiation source radiation is scattered toward the luminescent material, while a lesser amount of the luminescent material radiation that is emitted downward toward the radiation source is scattered back toward the luminescent material.

Pet. 37–38 (citing Ex. 1008, 7:17–26). Petitioner contends that "a POSA would have been motivated to apply this principle to Basin 2007, because it would increase the conversion of blue light to yellow light and improve the uniformity of the light source." *Id.* at 38 (citing '260 IPR Ex. 1022 ¶ 48). Petitioner argues that "[c]onversion of blue light to yellow light is improved

by maximizing the scattering of blue light." *Id.* (citing '260 IPR Ex. 1022 ¶ 48). Petitioner asserts that "[u]niformity is improved by preferentially scattering the concentrated light from the blue-light LED chip instead of the disperse light emitted by the phosphor." *Id.* (citing '260 IPR Ex. 1022 ¶ 48). Petitioner argues that "[a] POSA would have had a reasonable expectation of success applying this principle to Basin-2007, because the relevant particle size range is encompassed the range disclosed by Basin-2007." *Id.* at 39. Petitioner argues that "[a] POSA would have recognized selecting an average particle size as a design decision to be made based on a number of factors, including the light scattering properties of the particles, and well within the skill of the art." *Id.* (citing '260 IPR Ex. 1022 ¶ 49). Petitioner further explains how the combination would render obvious the limitations of claims 12–14. *See id.* at 40–47.

Patent Owner does not dispute that the combination of Basin-2007, Basin-2005, and Stokes would account for all the limitation of claims 11–14. *See* '260 IPR PO Resp. 23–33. Patent Owner instead raises several arguments that a person of ordinary skill would not have been motivated to combine Stokes with Basin-2007, as stated in the Petition. First, Patent Owner argues that the combination of Stokes with Basin-2007 is impossible. Patent Owner contends that Stokes discloses a lamp with a radiation scattering material between the radiation source and the luminescent material, instead of luminescent material between the radiation source and radiation scattering material as in the '678 patent and the prior art. *Id.* at 24–25. Patent Owner asserts that Stokes locates its radiation scattering material between the radiation source and the luminescent material to reduce the "halo" or "penumbra" effect. *Id.* at 25–26 (citing Ex. 1008, 1:37–38, 1:48–50, 1:51–53, 2:62–63; Ex. 2039 ¶ 13). Patent Owner contends that

"[c]ontrary to every claim of the '678 patent, Stokes does nothing to improve an off-state white appearance of the wavelength conversion layer. Instead, Stokes places the white scattering material between the LED and the luminescent material, leaving the non-white luminescent material on the outside layer visible to an observer when the device is turned off." *Id.* at 26. Patent Owner argues that the Stokes approach is also "incompatible" with Basin-2007, which describe the scattering material as the outside layer." *Id.* at 26–27.

Second, Patent Owner argues that Stokes teaches away from the claimed invention and the other prior art. *Id.* at 27–28. Patent Owner asserts that Stokes expressly criticizes the resulting penumbra effect of placing the light scattering material above the luminescent (phosphor material). *Id.* at 27 (citing Ex. 1008, 1:36–2:64). Patent Owner also submits that Stokes praises the benefits of placing the light scattering material between the LED and the luminescent material. *Id.* at 27–28 (citing Ex. 1008, 4:3–15, 6:13–19). Third, Patent Owner contends that "[o]ne of skill in the art could not have combined Stokes with any of the other cited references in order to arrive at the '678 Patent claims because Stokes teaches positioning the phosphor on the *exterior* of the filament." *Id.* at 29. Patent Owner argues that is "exactly what the '678 patent sought to avoid," and Petitioner has "not reconciled this fundamental incompatibility with the state purpose of the '678 patent." *Id.* at 29–30. Finally, Patent Owner asserts that Petitioner has failed to "explain[] *how* one of skill in the art allegedly would have modified the primary references in light of Stokes to arrive at the invention recited in claims 11-14." *Id.* at 30. Patent Owner argues that placing the light scattering material between the LED and the phosphor makes the arrangements recited in claims 11–14 impossible. *Id.* at 30–33.

We find that Petitioner has shown by a preponderance of the evidence that a person of ordinary skill in the art would have been motivated to combine Basin-2007, Basin-2005, and Stokes. As Petitioner explains, Basin-2007 already teaches that its particles are "submicron," and Stokes teaches that the scattering properties of a light diffusing layer can be improved by selecting particular particle sizes of a certain size relative to the wavelength. *See* '260 IPR Pet. 31 (citing Ex. 1008, 7:1–4). Thus, a person of ordinary skill in the art would have been motivated to improve the scattering of blue light by Basin-2007's light-diffusing layer "because it would increase the conversion of blue light to yellow light and improve the uniformity of the light source." *Id.* at 39 (citing '260 IPR Ex. 1022 ¶ 48). Petitioner further explains that "[c]onversion of blue light to yellow light is improved by maximizing the scattering of blue light," and "[u]niformity is improved by preferentially scattering the concentrated light from the blue-light LED chip instead of the disperse light emitted by the phosphor." *Id.* (citing '260 IPR Ex. 1022 ¶ 48). We find this reasoning persuasive and that this would be merely the application of a known method (selected particle size) to improve Basin-2007's light diffusing layer, particularly given that Basin-2007 discloses a particle size close to the optimal scattering size. *See KSR*, 550 U.S. at 416 (observing that the combination of known elements according to known methods yields predictable results and would be a predictable variation).

Patent Owner's arguments to the contrary are not availing. The main thrust of Patent Owner's arguments is that Stokes places its light-diffusing layer between the LED and the luminescent layer, not above the luminescent layer. But this argument ignores the combination proposed. Petitioner does not propose physically incorporating Stokes into Basin-2007, or to modify

the placement of the light-diffusing layer of Stokes or Basin-2007. Instead, Petitioner proposes taking Stokes's teachings regarding selection of particle size to improve blue-light scattering and implementing those teachings to improve Basin-2007. Patent Owner is correct that Stokes seeks to address the halo effect, but that does not mean that a person of ordinary skill would ignore its teachings regarding particle size. *See In re Heck*, 699 F.2d 1331, 1332–33 (Fed. Cir. 1983) ("The use of patents as references is not limited to what the patentees describe as their own inventions or to the problems with which they are concerned. They are part of the literature of the art, relevant for all they contain."). Although Stokes's placement of its light-diffusing layer may mitigate the "halo effect," that placement will not address the off-state white appearance that Basin-2007 seeks to address. "[A] given course of action often has simultaneous advantages and disadvantages, and this does not necessarily obviate motivation to combine." *Medichem*, 437 F.3d at 1165. Here, the combination would offer the off-state white appearance benefits of Basin-2007, but have the improved scattering performance taught by Stokes. *See* '260 IPR Ex. 1022 ¶ 84.

We also disagree that Stokes teaches away from the combination. A reference teaches away "when a person of ordinary skill, upon reading the reference, would be discouraged from following the path set out in the reference, or would be led in a direction divergent from the path that was taken" in the claim. *Galderma Labs.*, 737 F.3d at 738. A reference that "merely expresses a general preference for an alternative invention but does not criticize, discredit, or otherwise discourage investigation into" the claimed invention does not teach away. *Id.* Stokes does not teach that its particle size teachings will not work with other devices or otherwise discourage their application to other configurations. Moreover, Stokes's

expression of a preference for its placement of the light-diffusing layer does not suggest that the placement of a light-diffusing layer above the phosphor would not work. *See In re Gurley*, 27 F.3d 551, 554 (Fed. Cir. 1994) ("A known or obvious composition does not become patentable simply because it has been described as somewhat inferior to some other product for the same use."). Indeed, both Krummacher and Basin-2007 were filed years (6 and 7 years) after Stokes (filed 2000), which suggests that a person of ordinary skill in the art was not discouraged from placing the light-diffusing layer above the phosphor as Patent Owner suggests. Thus, we find that Petitioner has shown that there was a motivation to combine Basin-2007, Basin-2005, and Stokes, as suggested.

We find that Petitioner has shown by a preponderance of the evidence that the combination of Basin-2007, Basin-2005, and Stokes accounts for all the limitations of claims 11–14 and that a person of ordinary skill in the art would have been motivated to combine Basin-2007, Basin-2005, and Stokes with a reasonable expectation of success. Weighing Petitioner's strong showing on the scope and content of the prior art and the motivation to combine the references against Patent Owner's evidence of objective indicia of non-obviousness, we find that Petitioner has shown by a preponderance of the evidence claims 11–14 would have been obvious over the combination of Basin-2007, Basin-2005, and Stokes.

I. *Obviousness of Claims 19, 20, and 29 Over Hussell, Basin-2007, and Van Woudenberg*

Petitioner argues that claims 19, 20, and 29 would have been obvious over the combination of Hussell, Basin-2007, and Van Woudenberg. *See* Pet. 39–55. Patent Owner Opposes. *See* PO Resp. 36–41.

1. Petitioner's Contentions

Petitioner admits that Hussell does not disclose a light-diffusing layer, but argue that this is disclosed in Basin-2007. *See* Pet. 39. Petitioner acknowledges that Hussell does not disclose the specific wavelength, but argues that the wavelength of blue light emitted by the semiconductor light emitting device is greater than or equal to 440 nm is disclosed in Van Woudenberg. *See id.*

Petitioner notes that Hussell discloses a light bulb containing LED "filaments" which it also refers to as "wavelength conversion tubes." *Id.* (citing Ex. 1011 ¶ 52). Petitioner submits that these filaments have YAG phosphor located on or near the outer surface of the tube to convert blue light. *Id.* Petitioner contends that "such YAG phosphors – the same phosphors disclosed in Basin-2007, Shimizu and Krummacher – appear yellow in the off-state." *Id.* Petitioner argues that "[a]s disclosed in Basin-2007 (and other references discussed herein), such yellow appearance is undesirable," and therefore, "[a] POSA would have thus been motivated to avoid such an appearance and would find success doing so by coating the filaments in Hussell with a light diffusing layer as taught in Basin-2007." *Id.* (citing Ex. 1002 ¶¶ 175–77); *see also id.* at 47–48 (citing Ex. 1005 ¶ 4 (noting "[t]he YAG phosphor coating on the LED appears yellow-green under white ambient light when the LED is off. Such a yellow-green color is generally not attractive.").

Petitioner notes that Van Woudenberg discloses the same off-state color problem caused by phosphor as Basin-2007, i.e., that the off-state yellowish appearance of the YAG phosphor is perceived as unattractive. *See id.* at 48–49 (citing Ex. 1020, 1:14–28).

According to Petitioner, a skilled artisan would have been motivated to combine Hussell, Basin-2007, and Van Woudenberg with a reasonable expectation of success to avoid the OFF-state problem discussed above. *See id.* at 40, 47–51, 54. Petitioner argues that there is an additional motivation to combine Hussell and Basin-2007. Namely, Petitioner notes that Hussell discloses that "[t]exturing may enhance scattering of light." Ex. 1011 ¶ 48. Petitioner argues that the TiO_2 particles in Basin-2007 would also enhance light scattering. *See* Pet. 51.

With respect to the combination of Hussell with Van Woudenberg, Petitioner submits that Hussell teaches that its wavelength conversion tube contains a "blue emitting LED." *See id.* at 52–53 (citing Ex. 1011 ¶¶ 6, 41, 42). Petitioner notes that Hussell does not disclose the wavelength of the blue light being emitted. Petitioner contends that a person of ordinary skill would look to Van Woudenberg, which "has the same purpose—the creation of white light through YAG phosphor conversion using blue-light LEDs." *Id.* at 54. Petitioner asserts that "Van Woudenberg [discloses that] the 'primary light' emitted by an LED chip typically has a wavelength between 430 and 480 nm with the greatest distribution around 440 nm." *Id.* at 53–54 (citing Ex. 1011, 5:14–24, Fig. 2). Thus, Petitioner argues that a person of ordinary skill in the art "would have been motivated to use LEDs emitting blue light having wavelengths between 430–480nm according to Van Woudenberg in Hussell." *Id.* at 54.

2. Patent Owner's Contentions

Patent Owner does not dispute that the combination of Hussell, Basin-2007, and Van Woudenberg discloses the limitations of claims 19, 20, and 29. *See* PO Resp. 36–41. Instead, Patent Owner argues that Petitioner has failed to show a motivation to combine Hussell, Basin-2007, and Van

Woudenberg. *Id.* Patent Owner argues that Petitioner fails to address the very different lighting applications disclosed in these three separate references or explain why one of skill in the art would have selectively combined the cited teachings from these references. *Id.* at 36. Patent Owner asserts that Petitioner does "not address how or why a POSITA would be motivated to apply Basin-2007's silicone encapsulant designed for momentarily energized lighting devices using TFFC configurations to Hussell's incandescent replacement application or Van Woudenberg's auxiliary lights using DIP or SMD LEDs beyond utilizing the same phosphor." *Id.* at 38. Patent Owner contends that "[a] POSITA would not find it obvious to combine Hussell, Basin-2007, and Van Woudenberg's LEDs because both the structural differences of the LEDs themselves in addition to the differing applications from one reference to the next require vastly different packaging approaches that would prevent a POSITA from having the motivation to combine these references." *Id.*

Patent Owner further argues that Petitioner fails to "explain how a POSITA would have overcome the various challenges to combining these three references." *Id.* Patent Owner asserts that "a POSITA would not be motivated to combine Hussell with Basin-2007 or Van Woudenberg because Hussell is directed to remote-phosphor devices and Basin-2007 and Van Woudenberg are directed to non-remote phosphor devices." *Id.* Patent Owner contends that "[r]emote phosphor devices contain a phosphor element that is physically separate from the light emitter." *Id.* at 38–39 (citing Ex. 2026 ¶ 120). Patent Owner asserts that "Prof. Doolittle expressly stated that there would be multiple challenges to overcome in attempting to combine remote phosphor devices with non-remote phosphor devices because 'by definition, a remote phosphor device is going to require more

phosphor than a non-remote phosphor device.'" *Id.* at 39 (citing Ex. 2023, 115:3–8). Patent Owner argues that Petitioner has "not explained how a POSITA would overcome this challenge in order to combine Basin-2007 and Van Woudenberg, which are directed to non-remote phosphor devices . . . with Hussell, which is directed to a remote phosphor device." *Id.*

Patent Owner also argues that "the 'conventional incandescent lamp' style light emitting filaments described in Hussell . . . available as of the filing date of the '678 Patent included *frosted* bulbs." *Id.* (citing Ex. 2026 ¶ 121). Patent Owner asserts that "[t]here would be no motivation to incorporate any TiO_2 encapsulant described in Basin-2007 in a frosted bulb embodiment because the 'undesirable' yellow color of the phosphor conversion layer would not be visible, thus eliminating one of the claimed benefits of the '678 Patent." *Id.* Patent Owner contends that "[a]s for any unfrosted, Hussell-style bulbs, if Petitioners' proposed combination were as obvious as Petitioners contend, bulb suppliers would have been making and selling them years earlier to meet the long-felt need." *Id.* at 39–40.

Patent Owner also argues that "[i]f Hussell's LED includes texturing that 'may enhance scattering of light'. . . , such texturing would be redundant to a POSITA because both the texturing and the light diffusing layer increase scatter." *Id.* at 40 (citing Ex. 2026 ¶ 121).

Patent Owner argues that "Van Woudenberg is similarly redundant because provides for a completely different method for producing a 'neutral white appearance of a lighting device and/or luminaire in the functional off-state' by providing for 'a residual current to the (phosphor coated) light emitting diode in the functional off-state.'" *Id.* (citing Ex. 1020, code (57)). Patent Owner contends that "[a]s such, there would be no need to incorporate any silicone encapsulant described in Basin-2007 with either of

these references." *Id.* (citing Ex. 2026 ¶ 121; Ex. 2023, 76:14–77:8). Patent Owner also reiterates its quantum efficiency arguments. *Id.* at 41 (citing Ex. 2026 ¶ 123).

3. Analysis

With respect to the limitations of claims 19, 20, and 29, Petitioner provides a detailed mapping how the prior art accounts for the limitations of these claims. *See* Pet. 39–55. Patent Owner does not dispute that the prior art accounts for those limitations. *See* PO Resp. We have reviewed Petitioner's evidence and contentions, and we find that Petitioner has shown that the combination of Hussell, Basin-2007, and Van Woudenberg accounts for the limitations of claims 19, 20, and 29. *See* Pet. 39–55. Patent Owner disputes whether Petitioner has provided an adequate motivation to combine Hussell, Basin-2007, and Van Woudenberg. Thus, we focus our analysis on the motivation to combine the references.

We find that Petitioner has shown by a preponderance of evidence that a person of ordinary skill in the art would have been motivated to combine Hussell, Basin-2007, and Van Woudenberg with a reasonable expectation of success. As Petitioner explains, Hussell discloses that it uses "blue light emitting LED" but does not disclose the wavelength of this blue LED. Pet. 52–54. As Petitioner explains, Van Woudenberg, which also creates white light through YAG phosphor conversion using blue-light LEDs, teaches that the "primary light" emitted by an LED chip typically has a wavelength between 430 and 480 nm with the greatest distribution at around 440 nm. *Id.* at 53–54 (citing Ex. 1020, 5:14–24). Van Woudenberg further provides teachings explaining that the light hitting the phosphor is converted into a much longer wavelength. *Id.* at 54 (citing Ex. 1020, Fig. 2). We find that Petitioner has shown sufficiently that a person of ordinary skill

in the art seeking to understand the operating wavelength for blue LEDs in YAG phosphor systems, like those used in Hussell and Van Woudenberg, would look to a reference, such as Van Woudenberg, which provides detailed teachings, in the form of Figure 2, for the operating wavelengths for such systems. *See Realtime Data*, 912 F.3d at 1374. We further find that Petitioner has shown a motivation to incorporate the light-diffusing layer of Basin-2007 into the Hussell's device. *See* Pet. 46–51. As Petitioner persuasively explains, a person of ordinary skill in the art would have been motivated to incorporate the light-diffusing layer of Basin-2007 to improve the off-state white appearance of Hussell's wavelength conversion tube. *See id.* at 47–50 (citing Ex. 1002 ¶¶ 184–188).

Patent Owner's arguments to the contrary are not availing. First, we disagree that Petitioner has only offered conclusory assertions. PO Resp. 37. As set about above, Petitioner has set out its rationale for combining the references in detail. Second, we disagree that the differences between the references would dissuade a person of ordinary skill from making the combination. As an initial matter, "[t]he test for obviousness is not whether the features of a secondary reference may be bodily incorporated into the structure of the primary reference." *Allied Erecting & Dismantling*, 825 F.3d at 1381. Thus, it is irrelevant whether the precise LED from Van Woudenberg can be incorporated into Hussell. As for the combination with Basin-2007, Petitioner does not propose taking the unmodified light-diffusing layer from Basin-2007 and incorporating it into Hussell. *See* Pet. 50. Instead, Petitioner proposes taking Basin-2007's teachings of the benefits of such a layer and applying Basin-2007's teachings that a light-diffusing layer can be "spun on" or "molded directly over" an LED and phosphor. *Id.* (citing Ex. 1005 ¶ 31). As Dr. Doolittle persuasively testifies,

applying a coating, such as Basin-2007's light-diffusing layer, to the outer surface of Hussell's wavelength conversion tube was well within the level of skill in the art. *See* Ex. 1002 ¶ 189. Thus, we agree with Petitioner that a person of ordinary skill in the art would have been motivated to use this known method of improving the off-state white appearance as Petitioner contends. *See KSR*, 550 U.S. at 416 (observing that the combination of known elements according to known methods yields predictable results and would be a predictable variation).

As for Patent Owner's assertion that there would be some difficulty incorporating the teachings from Van Woudenberg and Basin-2007 into Hussell, because Hussell is a remote phosphor device and Basin-2007 and Van Woudenberg are not, we disagree. *See* PO Resp. 38–39. Petitioner does not propose combining phosphor features from the references, but rather the LED wavelength teachings of Van Woudenberg and the light-diffusing layer of Basin-2007. Thus, we do not agree that this difference is meaningful to the combination proposed.

Patent Owner asserts that Dr. Doolittle "expressly stated that there would be multiple challenges to overcome in attempting to combine remote phosphor devices with non-remote phosphor devices because 'by definition, a remote phosphor device is going to require more phosphor than a non-remote phosphor device.'" *Id.* at 39 (citing Ex. 2025, 115:3–8). This assertion misrepresents what Dr. Doolittle testified. The testimony quoted was part of a lengthy discussion of whether the '678 patent described configuring its light-diffusing layer to substantially reduce the quantity of phosphor material required to generate a selected color of emitted light. *See* Ex. 2025, 112:17–121:6. Dr. Doolittle testified that this reduction was difficult to reconcile for both remote and non-remote devices, and he did not

believe that the patent provided enough description to enable a person of ordinary skill to achieve such a reduction in phosphor usage for both remote and non-remote devices. *Id.* He also explained that this difference did not otherwise affect his opinions. *Id.* at 139:20–140:3.

Patent Owner also argues that some of the embodiments of Hussell's replacement bulb may be frosted, which would eliminate the need to improve the off-state white appearance of the phosphor. PO Resp. 39. However, as Patent Owner appears to admit, there were also unfrosted versions. *See id.* ("embodiments . . . included *frosted* bulbs"). The fact that some versions might be frosted does not eliminate the motivation to improve the off-state white appearance for the unfrosted versions.

As for Patent Owner's argument that the long-felt need demonstrates that improving the unfrosted bulbs would not have been obvious, we found above that Patent Owner has not shown a long-felt need. Thus, we do not agree that the lack of anticipatory references demonstrates the nonobviousness of the claimed invention. Patent Owner also argues that Van Woudenberg is "similarly redundant" because it "provides for a completely different method for producing a 'neutral white appearance of a light device and/or luminaire in the functional off-state' by providing for 'a residual current to the (phosphor coated) light emitting diode in the functional off-state.'" *Id.* at 40. However, Petitioner does not propose incorporating this feature in the combination with Hussell. Thus, the combination does not render the features incorporated from Basin-2007 redundant.

Finally, as for Patent Owner's quantum efficiency argument, PO Resp. 41, we addressed this argument above. *See supra* at 40–41.

J. *Obviousness of Claims 1–3, 6, 10–14, 16, 19, 21, and 25 Over Krummacher, Shimizu and Stokes*

Petitioner contends that claims 1–3, 6, 10–14, 16, 19, 21, and 25 of the ’678 patent are unpatentable under 35 U.S.C. § 103(a) as obvious over Krummacher, Shimizu, and Stokes. Pet. 55–77; ’260 IPR Pet. 47–67. Patent Owner opposes. PO Resp. 41–45.

1. Claims 1–3, 6, 10, 16, 19, 21, and 25

a) Petitioner’s Contentions[13]

Petitioner argues that “[l]ike Basin-2007, Krummacher discloses every element in the challenged claims except the specific wavelength of blue light emitted by the LED chip.” Pet. 55. Petitioner asserts that “LED chips emitting blue light at greater than or equal to 440 nm were well known in the art as evidenced by Shimizu and Stokes (incorporated by reference in Shimizu).” *Id.*

Petitioner asserts that the combination of Krummacher, Shimizu, Stokes teaches or suggests this limitation, and that a person of ordinary skill in the art would have been motivated to combine the references with a reasonable expectation of success. *See id.* at 60–63 (citing Ex. 1002 ¶¶ 211–217; Ex. 1010, 23:43, 27:4–5, 28:55, 25:24–25; 29:45; Ex. 1008, 4:37–40, 6:62–67; Ex. 1007 ¶¶ 3, 22, 31–32). Petitioner submits that “[i]n addition to being a whitelight emitting LED device, Krummacher discloses that ‘the optoelectronic component is for example an LED or an LED module comprising one or more radiation-emitting semiconductor chips, in which case said semiconductor chip or chips emit blue or ultraviolet light

[13] Petitioner’s allegations regarding claim 1 in the ’260 IPR for this ground overlap with the allegations made in the ’1357 IPR, so, for clarity, we cite only to the ’1357 IPR papers.

that is converted to white light by the luminescence conversion layer.'" *Id.* at 61–62 (citing Ex. 1007 ¶ 22). Petitioner notes that "Krummacher discloses that 'active layer 2 is preferably an organic light-emitting layer, particularly emitting blue light' or 'an inorganic semiconductor material, preferably emitting in the blue and/or ultraviolet region of the spectrum.'" *Id.* at 62 (citing Ex. 1007 ¶¶ 31–32). Petitioner contends that Stokes and Shimizu provide details of the conventional white light source used in Krummacher. *Id.*

Petitioner argues that "[a] POSA would have been motivated to use a blue-light LED chip like that disclosed by Stokes and Shimizu in a conventional white-light LED light source called for by Krummacher." *Id.* at 63 (citing Ex. 1002 ¶ 215). Petitioner submits that "Shimizu, in particular, is cited by both '678 patent and the prior art as an example of a conventional white-light LED light source containing a blue-light LED." *Id.* Thus, Petitioner contends that "it would have been obvious to look to Shimizu and Stokes for details of the conventional white-light LED light source used in Krummacher, and a POSA would have had a reasonable expectation of success in doing so, because they would simply be using the conventional white light LED disclosed in the prior art as directed by Krummacher." *Id.* Petitioner argues that "not only does Krummacher suggest the use of an LED like that disclosed in Stokes and Shimizu, doing so would have been the simple substitution of one known element for another to obtain predictable results and well within the skill of a POSA." *Id.* (citing Ex. 1002 ¶¶ 216–217).

b) Patent Owner's Contentions[14]

Patent Owner also argues that Petitioner has failed to establish that a POSITA would have been motivated to combine Krummacher, Shimizu, and Stokes. PO Resp. 41–45. Patent Owner asserts that Petitioner fails to account for the differences among the references and offers only conclusory statements. *See id.* at 42–44. Patent Owner contends that Krummacher, Shimizu, and Stokes are all different applications of LEDs. *Id.* at 42. Patent Owner submits that "Krummacher discloses vertical flow chip configurations utilized in large area lighting units . . . , which is entirely different than the applications disclosed in Shimizu and Stokes." *Id.* Patent Owner notes that "Shimizu discloses DIP and lead-frame SMD LEDs in industrial applications such as LED displays, back light sources, traffic signals, trailway signals, etc. . . . , and Stokes also discloses DIP and lead-frame SMD LEDs involved in commercial applications such as automotive, display, and safety/emergency uses." *Id.* at 42–43. Patent Owner argues that "[t]hese applications require different packaging approaches than Krummacher, and Petitioners have not demonstrated how a POSITA would easily incorporate the LEDs of Shimizu or Stokes into Krummacher beyond so-called 'simple substitution.'" *Id.*

Patent Owner also repeats its quantum efficiency argument discussed above. *See id.* at 44; *see also supra* 37–38.

c) Analysis

With respect to the limitations of claims 1–3, 6, 10, 16, 19, 21, and 25, Petitioner provides a detailed mapping how the prior art accounts for the

---

[14] Patent Owner repeats the same arguments from the '1357 IPR in its Patent Owner Response for the '260 IPR. For clarity, we cite only to the '1357 IPR.

limitations of these claims. Patent Owner does not dispute that the prior art accounts for those limitations. We have reviewed Petitioner's evidence and contentions, and we find that Petitioner has shown that the combination of Krummacher, Shimizu, and Stokes accounts for the limitations of claims 1–3, 6, 10, 16, 19, 21, and 25. *See* Pet. 55–77. Patent Owner disputes that Petitioner has provided an adequate motivation to combine Krummacher, Shimizu, and Stokes. Thus, we focus our analysis on the motivation to combine the references.

We find that Petitioner has shown by a preponderance of the evidence that a person of ordinary skill in the art would have been motivated to combine Krummacher with Shimizu and Stokes. As the Petition explains, Krummacher discloses the use of blue LED, but does not specify the wavelength at which the chip operates. Pet. 60–61 (citing Ex. 1007 ¶¶ 3, 22, 31–32). We agree with Petitioner that a person of ordinary skill would turn to known references, such as Shimizu, which is acknowledged as conventional and known by '678 patent, and Stokes. *See* Ex. 1001, 1:34–38. Indeed, Petitioner notes that Shimizu, in summarizing the state of the art, discloses a dozen examples with blue-light LED chips having emission peaks greater than 440 nm. *See* Pet. 62 (citing Ex. 1010, Figs., 23:43 (450 nm), 27:4–5 (450 nm), 28:55 (450 nm), 25:24–25 (460 nm), 29:45 (470 nm)). In addition, Petitioner notes that "Stokes discloses an LED chip that 'emits blue light 48 having a wavelength between about 420 and 480 nm' along with 'blue emitting LEDs having a peak emission wavelength of λ=450 nm' or 'peak emission wavelength of λ=480 nm.'" *Id.* (Ex. 1008, 4:37–40, 6:62-67).

Particularly when viewed in the context of the background references Petitioner provided, the evidence strongly supports the notion that the

wavelength range claimed (blue light with a wavelength greater than 440 nm) was "nothing more than the 'combination of familiar elements according to known methods,' 'each performing the same function it had been known to perform,' 'yield[ing] predictable results.'" *Randall Mfg. v. Rea*, 733 F.3d 1355, 1363 (Fed. Cir. 2013) (citing *KSR*, 550 U.S. at 416–17).

Patent Owner's arguments to the contrary are not availing. As explained above, "[t]he test for obviousness is not whether the features of a secondary reference may be bodily incorporated into the structure of the primary reference." *Allied Erecting & Dismantling Co.*, 825 F.3d at 1381. Petitioner has shown that white-light LED assemblies that used blue-light LEDs with wavelengths greater than 440 nm were well known and conventional. There is no need to show that the LEDs from Shimizu or Stokes can be bodily incorporated into Krummacher. Contrary to Patent Owner's suggestions, we disagree that the Petition proposes such bodily incorporation. PO Resp. 42–43 ("These applications require different packaging approaches than Krummacher, and Petitioners have not demonstrated how a POSITA would easily incorporate the LEDs of Shimizu or Stokes into Krummacher beyond so-called 'simple substitution.'"). Petitioner merely relies on these references for their teachings regarding wavelengths and suggests only using an LED "like" that disclosed in Shimizu and Stokes. *See* Pet. 62, 63.

As for Patent Owner's arguments regarding quantum efficiency, *see* PO Resp. 44, we have addressed them above with respect to Basin-2007 and Basin-2005 and they are not availing for the same reasons for this ground as well. *See supra* at 40–41. Thus, we find that Petitioner has shown by a preponderance of the evidence that the combination of Krummacher, Shimizu, and Stokes accounts for the limitations of the challenged claims,

and that a person of ordinary skill would have combined the references in the manner suggested with a reasonable expectation of success. *See* Ex. 1002 ¶¶ 211–216.

d) Summary

We find that Petitioner has shown by a preponderance of the evidence that the combination of Krummacher, Shimizu, and Stokes accounts for all the limitations of claims 1–3, 6, 10, 16, 19, 21, and 25 and that a person of ordinary skill in the art would have been motivated to combine Krummacher, Shimizu, and Stokes with a reasonable expectation of success. Weighing Petitioner's strong showing on the scope and content of the prior art and the motivation to combine the references against Patent Owner's evidence of objective indicia of non-obviousness, we find that Petitioner has shown by a preponderance of the evidence claims 1–3, 6, 10, 16, 19, 21, and 25 would have been obvious over the combination of Krummacher, Shimizu, and Stokes.

2. Claims 11–14

Petitioner contends that claims 11–14 are unpatentable under 35 U.S.C. § 103(a) as obvious over Krummacher, Shimizu, and Stokes. '260 IPR Pet. 56–68.

Petitioner notes that Krummacher already discloses a light scattering material with TiO_2 particles "preferrable having a radius of between 50 nm inclusive and 1000 nm inclusive." '260 IPR Pet. 58 (citing '260 IPR Ex. 1022 ¶ 80). Petitioner further relies on Stokes to teach an average particle size that preferentially scatter blue . . . LED light as compared to yellow . . . light from the luminescent material." *Id.* at 59 (citing Ex. 1008, 7:1–4). Petitioner argues that "a POSA would have been motivated to apply this principle to Krummacher, because it would increase the conversion of

blue light to yellow light and improve the uniformity of the light source." *Id.* at 60 (citing '260 IPR Ex. 1022 ¶ 84). Petitioner notes that "[c]onversion of blue light to yellow light is improved by maximizing the scattering of blue light." *Id.* In addition, Petitioner asserts that "[u]niformity is improved by preferentially scattering the concentrated light from the blue-light LED chip instead of the disperse light emitted by the phosphor." *Id.* (citing '260 IPR Ex. 1022 ¶ 84). Petitioner contends that "[a] POSA would have had a reasonable expectation of success applying this principle to Krummacher, because the relevant particle size range includes the range disclosed by Krummacher." *Id.* Petitioner argues that "[a] POSA would have recognized selecting an average particle size as a design decision to be made based on a number of factors, including the light scattering properties of the particles, and well within the skill of the art." *Id.* (citing '260 IPR Ex. 1022 ¶ 85).

Petitioner also explains how the combination accounts for claims 12, 13, and 14. *Id.* at 61–68.

Patent Owner does not dispute that the combination of Krummacher, Shimizu, and Stokes would account for all the limitation of claims 11–14. *See* '260 IPR PO Resp. 23–33. Patent Owner instead raises several arguments that a person of ordinary skill would not have been motivated to combine Stokes with Krummacher, as stated in the Petition. First, Patent Owner argues that the combination of Stokes with Krummacher is impossible. *See id.* at 24. Patent Owner contends that Stokes discloses a lamp with a radiation scattering material between the radiation source and the luminescent material, instead of luminescent material between the radiation source and radiation scattering material as in the '678 patent and the prior art. *Id.* at 24–25. Patent Owner asserts that Stokes locates its radiation scattering material between the radiation source and the

luminescent material to reduce the "halo" or "penumbra" effect. *Id.* at 25–26 (citing Ex. 1008, 1:37–38, 1:48–50, 1:51–53, 2:62–63; Ex. 2039 ¶ 13). Patent Owner contends that "[c]ontrary to every claim of the '678 patent, Stokes does nothing to improve an off-state white appearance of the wavelength conversion layer." *Id.* at 26. Patent Owner asserts that "[i]nstead, Stokes places the white scattering material between the LED and the luminescent material, leaving the non-white luminescent material on the outside layer visible to an observer when the device is turned off." *Id.* Patent Owner argues that "[t]he Stokes approach is also incompatible with both Basin-2007 and Krummacher, which describe the scattering material as the outside layer." *Id.* at 26–27.

Second, Patent Owner argues that Stokes teaches away from the claimed invention and the other prior art. *Id.* at 27–28. Patent Owner asserts that Stokes expressly criticizes the resulting penumbra effect of placing the light scattering material above the luminescent (phosphor material). *Id.* at 27 (citing Ex. 1008, 1:36–2:64). Patent Owner also submits that Stokes praises the benefits of placing the light scattering material between the LED and the luminescent material. *Id.* at 27–28 (citing Ex. 1008, 4:3–15, 6:13–19).

Third, Patent Owner contends that "[o]ne of skill in the art could not have combined Stokes with any of the other cited references in order to arrive at the '678 Patent claims because Stokes teaches positioning the phosphor on the *exterior* of the filament." *Id.* at 29. Patent Owner argues that is "exactly what the '678 patent sought to avoid," and Petitioner has "not reconciled this fundamental incompatibility with the state purpose of the '678 patent." *Id.* at 29–30. Finally, Patent Owner asserts that Petitioner has failed to "explain[] *how* one of skill in the art allegedly would have

modified the primary references in light of Stokes to arrive at the invention recited in claims 11-14." *Id.* at 30. Patent Owner argues that placing the light scattering material between the LED and the phosphor makes the arrangements claimed in claims 11–14 impossible. *Id.* at 30–33.

Petitioner provides a mapping of claims 11–14 to the disclosures of Krummacher, Shimizu, and Stokes. *See* '260 IPR Pet. 53–67. Patent Owner does not dispute that the combination accounts for the limitations of claims 11–14. We have reviewed Petitioner's mapping and find that Petitioner has shown by a preponderance of the evidence that combination accounts for the limitations of these claims. We focus our analysis on the motivation to combine the references.

We find that Petitioner has shown by a preponderance of the evidence that a person of ordinary skill in the art would have been motivated to combine Krummacher, Shimizu, and Stokes. As Petitioner explains, Stokes teaches that the scattering properties of a light diffusing layer can be improved by selecting particular particle sizes of a certain size relative to the wavelength. *See* '260 IPR Pet. 59 (citing Ex. 1008, 7:1–4). Thus, a person of ordinary skill in the art would have been motivated to improve the scattering of blue light by Krummacher's light-diffusing layer "because it would increase the conversion of blue light to yellow light and improve the uniformity of the light source." *Id.* at 60 (citing '260 IPR Ex. 1022 ¶84). Petitioner further explains that "[c]onversion of blue light to yellow light is improved by maximizing the scattering of blue light," and "[u]niformity is improved by preferentially scattering the concentrated light from the blue-light LED chip instead of the disperse light emitted by the phosphor." *Id.* (citing '260 IPR Ex. 1022 ¶ 84). We find this reasoning persuasive and that this would be merely the application of a known method (selected particle

size) to improve Krummacher's light diffusing layer. *See KSR*, 550 U.S. at 416 (observing that the combination of known elements according to known methods yields predictable results and would be a predictable variation).

Patent Owner's arguments to the contrary are not availing. The main thrust of Patent Owner's arguments is that Stokes places its light-diffusing layer between the LED and the luminescent layer, not above the luminescent layer. But this argument ignores the combination proposed. Petitioner does not propose to physically incorporating Stokes into Krummacher, or to modify the placement of the light-diffusing layer of Stokes or Krummacher. Instead, Petitioner proposes taking Stokes's teachings regarding selection of particle size to improve blue-light scattering and implementing those teachings to improve Krummacher. Patent Owner is correct that Stokes seeks to address the halo effect, but that does not mean that a person of ordinary skill would ignore its teachings regarding particle size. *See Heck*, 699 F.2d at 1332–33 ("The use of patents as references is not limited to what the patentees describe as their own inventions or to the problems with which they are concerned. They are part of the literature of the art, relevant for all they contain.").

Although Stokes's placement of its light-diffusing layer may mitigate the "halo effect," that placement will not address the off-state white appearance that Krummacher seeks to address. "[A] given course of action often has simultaneous advantages and disadvantages, and this does not necessarily obviate motivation to combine." *Medichem, S.A.*, 437 F.3d at 1165. Here, the combination would offer the off-state white appearance benefits of Krummacher but have the improved scattering performance taught by Stokes. *See* '260 IPR Ex. 1022 ¶ 84.

We also disagree that Stokes teaches away from the combination. A reference teaches away "when a person of ordinary skill, upon reading the reference, would be discouraged from following the path set out in the reference, or would be led in a direction divergent from the path that was taken" in the claim. *Galderma Labs.*, 737 F.3d at 738. A reference that "merely expresses a general preference for an alternative invention but does not criticize, discredit, or otherwise discourage investigation into" the claimed invention does not teach away. *Id.* Stokes does not teach that its particle size teachings will not work with other devices or otherwise discourage their application to other configurations. Moreover, Stokes's expression of a preference for its placement of the light-diffusing layer does not suggest that the placement of a light-diffusing layer above the phosphor would not work. *See Gurley*, 27 F.3d at 554 ("A known or obvious composition does not become patentable simply because it has been described as somewhat inferior to some other product for the same use."). Indeed, both Krummacher and Basin-2007 were filed years (6 and 7 years) after Stokes (filed 2000), which suggests that a person of ordinary skill in the art was not discouraged from placing the light-diffusing layer above the phosphor as Patent Owner suggests. Thus, we find that Petitioner has shown that there was a motivation to combine Krummacher, Shimizu, and Stokes, as suggested.

We find that Petitioner has shown by a preponderance of the evidence that the combination of Krummacher, Shimizu, and Stokes accounts for all the limitations of claims 11–14 and that a person of ordinary skill in the art would have been motivated to combine Krummacher, Shimizu, and Stokes with a reasonable expectation of success. Weighing Petitioner's strong showing on the scope and content of the prior art and the motivation to

combine the references against Patent Owner's evidence of objective indicia of non-obviousness, we find that Petitioner has shown by a preponderance of the evidence claims 11–14 would have been obvious over the combination of Krummacher, Shimizu, and Stokes.

K. *Obviousness of Claims 19, 20, and 29 Over Hussell, Krummacher, and Van Woudenberg*

Petitioner contends that claims 19, 20, and 29 of the '678 patent are unpatentable under 35 U.S.C. § 103(a) as obvious over Hussell, Krummacher, Stokes, and Van Woudenberg. Pet. 77–79. Petitioner submits that Hussell in combination of with Van Woudenberg discloses every element in claims 19, 20, and 29 except a light diffusing layer that improves an off-state white appearance of the wavelength conversion component. *Id.* at 77–78. Petitioner contends that a "POSA would also find a specific way to achieve the desired off-state white appearance through the teachings in Krummacher." *Id.* at 78. Petitioner argues that "[t]his is at least because both Basin-2007 and Krummacher employ Ce:YAG:Ce phosphor particles in the wavelength conversion layer." *Id.* (citing Ex. 1005 ¶ 28; Ex. 1007 ¶ 36.) Petitioner submits that "[u]nlike Basin-2007, Krummacher discloses a variety of ways to add a light-scattering diffusion layer to a wavelength conversion component in order to achieve the desired off-state white appearance." *Id.* Petitioner argues that "[a] POSA would have a reasonable expectation of success in applying the 'light-scattering translucent layer' in Krummacher to the 'wavelength conversion tube' Hussell." *Id.* Petitioner contends that "Krummacher discloses a variety of ways to combine its 'light-scattering translucent layer' to a wavelength conversion layer." *Id.* Petitioner notes that "Krummacher teaches that the 'light-scattering translucent layer' can be a film or glass layer which is then 'laminated or

glued onto luminescence conversion layer 5.'" *Id.* (citing Ex. 1007 ¶¶ 42–43). Petitioner argues that "[a] POSA would understand that such materials can be applied to the 'wavelength conversion tube' in Hussell (which itself can be made from 'plastic, epoxy, silicone and/or other transparent or translucent material' . . . without undue experimentation." *Id.* at 78–79 (Ex. 1011 ¶ 36; Ex. 1002 ¶¶ 255–258). Petitioner further asserts that "Krummacher discloses techniques to facilitate adding the 'light-scattering translucent layer' to the wavelength conversion layer, such as ways to 'prevent reflection losses.'" *Id.* at 79 (citing Ex. 1007 ¶ 43). Petitioner concludes that "it would have been obvious to modify Hussell in view of Van Woudenberg and Krummacher to add a 'light-scattering translucent layer' to Hussell's wavelength conversion tube rendering claims 19, 20 and 29 obvious as a whole." *Id.* (citing Ex. 1002 ¶¶ 255–259).

Patent Owner does not dispute that the combination teaches the limitations of claims 19, 20, and 29, but instead argues that Petitioner did not meet its burden to show that there would be a motivation to combine these references. *See* PO Resp. 45–47; Sur-Reply 6–8. Patent Owner asserts that Petitioner fails to address the "very different lighting applications disclosed in these three separate references or explain why one of ordinary skill in the art would have selectively combined the cited teachings from these references." PO Resp. 45.

Patent Owner further argues that Hussell, Krummacher, and Van Woudenberg "are all different applications of LEDs." *Id.* at 46. Patent Owner submits that "Hussell involves conventional incandescent replacement applications," "Krummacher depicts vertical chip configurations utilized in large area lighting units," and "Van Woudenberg involves 'auxiliary lights in mobile phones or down-light units' using DIP

and SMD LEDs." *Id.* Patent Owner contends that "Petitioners offer nothing to meaningfully address how a POSITA would accommodate these differences to apply Krummacher's light-scattering translucent layer in a vertical chip configuration to Hussell's incandescent replacement application or Van Woudenberg's DIP and SMD LEDs beyond generic 'laminat[ing] or glu[ing].'" *Id.* Patent Owner argues that "[a] POSITA would not find the packaging requirements for each structure and application able to be combined with a reasonable expectation of success." *Id.* Finally, Patent Owner reiterates its arguments addressed above regarding the quantum efficiency of blue light LEDs. *Id.*

Petitioner provides a mapping of claims 19, 20, and 29 to the disclosures of Hussell, Krummacher, and Van Woudenberg. *See* Pet. 39–54, 77–79. Patent Owner does not dispute that the combination accounts for the limitations of claims 19, 20, and 29. We have reviewed Petitioner's mapping and find that Petitioner has shown by a preponderance of the evidence that combination accounts for the limitations of these claims. We focus our analysis on the motivation to combine the references.

We find that Petitioner has shown by a preponderance of the evidence that a person of ordinary skill in the art would be motivated to make the combination and modifications proposed. As explained above with respect to Ground 2, Petitioner proposes combining Hussell and Van Woudenberg to account for the bulb and wavelength limitations of claims 19, 20, and 29. This leaves only the combination only lacking the claimed "light diffusing layer" that "improves an off-state white appearance of the wavelength conversion component." We discussed the motivation to combine Hussell and Van Woudenberg above. *See supra* at 52–56. Petitioner then proposes applying the light scattering layer to the combined device of Hussell and

Van Woudenberg. As the Petition explains, Krummacher explicitly teaches that there was a desire to improve the off-state white appearance of the wavelength conversion layer. *See* Ex. 1007 ¶¶ 4, 41. Krummacher also expressly teaches that its light scattering layer can be applied to the wavelength conversion layer and teaches how to do so. *Id.* ¶¶ 42–45. Thus, as the Petition explains, a person of ordinary skill would be motivated to turn to Krummacher to address the known problem of off-state white appearance of the Hussell/Van Woudenberg wavelength conversion component. Indeed, the combination of Krummacher's light scattering layer with the combined device of Hussell and Van Woudenberg is nothing more than "the predictable use of prior art elements according to their established functions." *KSR*, 550 U.S. at 417.

Patent Owner's arguments to the contrary are not availing. We disagree with Patent Owner's assertion that Petitioner's arguments are brief or conclusory. Here, the reason to combine is found in the references themselves. Krummacher expressly acknowledges the problem of off-state white appearance and provides a solution and explains how to apply that solution generally. *See* Ex. 1007 ¶¶ 41–45. As for Patent Owner's arguments about the differences in the references, Patent Owner ignores that the actual combination proposed in the Petition. Petitioner does not propose wholesale combination of these three devices, but rather Petitioner incorporates specific teachings from each. Moreover, we fail to see how gluing a plastic film (Krummacher's light scattering layer) to a tube (Hussell/Van Woudenberg's wavelength conversion tube)—as proposed in the Petition—is beyond the level of skill in the art. *See KSR*, 550 U.S. at 421 ("A person of ordinary skill is also a person of ordinary creativity, not

an automaton.”). Finally, we addressed Patent Owner’s quantum efficiency arguments above, and did not find them persuasive. *See supra* at 41–43.

Thus, we find that Petitioner has shown by a preponderance of the evidence that a person of ordinary skill in the art would have been motivated to combine Hussell, Van Woudenberg, and Krummacher in the manner proposed with a reasonable expectation of success.

We find that Petitioner has shown by a preponderance of the evidence that the combination of Hussell, Van Woudenberg, and Krummacher accounts for all the limitations of claims 19, 20, and 29, and that a person of ordinary skill in the art would have been motivated to combine Hussell, Van Woudenberg, and Krummacher with a reasonable expectation of success. Weighing Petitioner’s strong showing on the scope and content of the prior art and the motivation to combine the references against Patent Owner’s evidence of objective indicia of non-obviousness, we find that Petitioner has shown by a preponderance of the evidence claims 19, 20, and 29 would have been obvious over the combination of Hussell, Van Woudenberg, and Krummacher.

IV. MOTION TO AMEND

Patent Owner filed a Revised Contingent Motion to Amend the claims of the ’678 patent, that requests “[t]o the extent the Board finds any of original claims 1–3, 6, 7, 9, 10–14, 16–21, 25, 26, and 29 (the ‘challenged claims’) unpatentable in this proceeding, . . . the Board consider this Revised Contingent Motion and grant entry of the corresponding substitute claims.” Rev. Mot. 2. Patent Owner proposes substitute claims 30–49 for original claims 1–3, 6, 7, 9, 10–14, 16–21, 25, 26, and 29. *Id.* at 3.

A. Proposed Substitute Claims

Proposed substitute claims 30–49 are reproduced below (underlining indicates additions and bracketing indicates deletions from each respective original claim).

30. A wavelength conversion component for a light emitting device

comprising:

a wavelength conversion layer comprising particles of at least one photoluminescence material; and

a light diffusing layer comprising particles of a light scattering material,

wherein the light diffusing layer improves an off-state white appearance of the wavelength conversion component;

<u>wherein the light diffusing layer is configured such that a portion of excitation light generated by the light emitting device is directed back at the wavelength conversion layer;</u>

wherein the wavelength conversion component is configured such that in operation a portion of excitation light comprising blue light having a wavelength of [greater than or equal to 440 nm] <u>between 450 nm and 470 nm</u> generated by the light emitting device is emitted through the wavelength conversion component to contribute to a final visible emission product;

<u>wherein the portion of excitation light generated by the light emitting device and directed back at the wavelength conversion layer reduces the wavelength conversion layer material necessary for a given color emission product.</u>

31. The component of claim [[1]]30, wherein the wavelength conversion layer and the light diffusing layer are in direct contact with each other, and

<u>wherein the wavelength conversion layer material necessary for a given color emission product is reduced by between 20% and 40%.</u>

32. The component of claim [[1]]30, wherein the wavelength conversion layer comprises a mixture of the at least one phosphor material and a light transmissive binder and the light diffusing layer comprises a mixture of the light scattering material and the light transmissive binder.

33. The component of claim [[3]]32, wherein the light transmissive binder comprises a curable liquid polymer selected from the group consisting of: a polymer resin, a monomer resin, an acrylic, an epoxy, a silicone and a fluorinated polymer.

34. The component of claim [[3]]32, wherein the weight loading of light scattering material to binder selected from the group consisting of: 7% to 35% and 10% to 20%.

35. The component of claim [[1]]30, wherein the wavelength conversion and light diffusing layers are deposited using a method selected from the group consisting of: screen printing, slot die coating, spin coating, roller coating, drawdown coating and doctor blading.

36. The component of claim [[1]]30, wherein the light scattering material is selected from the group consisting of: titanium dioxide, barium sulfate, magnesium oxide, silicon dioxide and aluminum oxide.

37. The component of claim [[1]]30 in which the wavelength conversion layer and the light diffusing layer comprises planar shapes.

38. The component of claim [[1]]30 in which the light diffusing layer comprises a dome or elongated dome shape.

39. The component of claim [[17]]38 in which the wavelength conversion layer fills a volume formed beneath the dome or elongated dome shapes.

40. A light emitting device, comprising:

at least one solid-state light emitter operable to generate excitation light; and

a wavelength conversion component comprising:

a wavelength conversion layer excitable by the excitation light, wherein the wavelength conversion layer comprises particles of at least one photoluminescence material; and

a light diffusing layer comprising particles of a light scattering

material,

wherein the light diffusing layer improves an OFF state white

appearance of the wavelength conversion component;

wherein the wavelength conversion component is configured

such that in operation a portion of light comprising blue light having a wavelength of [greater than or equal to 440 nm] <u>between 450 nm and 470 nm</u> generated by the at least one solid-state light emitter is emitted through the wavelength conversion component to contribute to a final visible emission product<u>;</u>

<u>wherein the light scattering material scatters excitation light from the one or more solid-state light emitters relatively more than the light scattering material scatters light generated by the at least one photoluminescence material</u>.

41. The device of claim [[19]]<u>40</u>, wherein the light emitting device is selected from the group consisting of: downlights, light bulbs, linear lamps, lanterns, wall lamps, pendant lamps, chandeliers, recessed lights, track lights, accent lights, stage lighting, movie lighting, street lights, flood lights, beacon lights, security lights, traffic lights, headlamps, taillights, and signs.

42. The device of claim [[19]]<u>40</u> in which the light scattering material

within the light diffusing layer corresponds to an average particle size that improves

the OFF state white appearance of the wavelength conversion component.

43. The device of claim [[19]]40 in which the wavelength conversion layer
and the light diffusing layer comprises planar shapes.

44. The device of claim [[19]]40 in which the light diffusing layer
comprises a dome or elongated dome shape.

45. A light bulb comprising:
a connector base configured to be inserted in a socket to form an electrical connection for the light bulb;
a body comprising one or more solid-state light emitters;
a wavelength conversion component having a three dimensional shape that is configured to enclose the one or more solid-state light emitters and to in part at least define a light mixing chamber,
wherein the wavelength conversion component comprises a
wavelength conversion layer comprising particles of at least one
photoluminescence material and a light diffusing layer comprising particles of a light scattering material,
wherein the light diffusing layer improves an off-state white appearance of the wavelength conversion component;
wherein the wavelength conversion component is configured such that in operation a portion of light comprising blue light having a wavelength of [greater than or equal to 440 nm] between 450 nm and 470 nm generated by the one or more solid-state light emitters is emitted through the wavelength conversion component to contribute to a final visible emission product;
wherein the light scattering material scatters excitation light from the one or more solid-state light emitters relatively more than the light scattering material scatters light generated by the at least one photoluminescence material.

46. The component of claim [[1]]30, wherein the light scattering material has an average particle size that is selected such that the light scattering material will scatter the excitation light relatively more than the light scattering material will

> scatter light generated by the at least one photoluminescence material.
>
> 47. The component of claim [[11]]46, wherein the light scattering material scatters the excitation light at least twice as much as light generated by the at least one photoluminescence material.
>
> 48. The component of claim [[11]]46, wherein the excitation light comprises blue light.
>
> 49. The component of claim [[13]]48, wherein the light scattering material has an average particle size that is less than about 150 nm.

Rev. Mot. Appendix A1–A7.

B. Statutory and Regulatory Requirements

"Before considering the patentability of any substitute claims, . . . the Board first must determine whether the motion to amend meets the statutory and regulatory requirements set forth in 35 U.S.C. § 316(d) and 37 C.F.R. § 42.121." *Lectrosonics, Inc. v. Zaxcom, Inc.*, IPR2018-01129, Paper 15 at 4 (PTAB Feb. 25, 2019) (precedential). These statutory requirements include (1) proposing a reasonable number of substitute claims per challenged claim; (2) ensuring that the motion to amend responds to a ground of unpatentability involved in the trial; (3) not enlarging the scope of the claims of the challenged patent or introducing new subject matter; and (4) providing a claim listing reproducing each proposed substitute claim. *Id.* at 4–8.

1. Reasonable Number of Substitute Claims

Patent Owner seeks to enter twenty proposed substitute claims if the twenty challenged claims are cancelled. Rev. Mot. 4. This is a presumptively reasonable number of substitute claims for each cancelled claim, and Petitioner does not argue otherwise. *See Lectrosonics*, Paper 15

at 4 ("There is a rebuttable presumption that a reasonable number of substitute claims per challenged claim is one (1) substitute claim."); *see* Rev. Opp.

2. Respond to a Ground of Unpatentability

In its proposed substitute claims, Patent Owner provides additional limitations that it contends further distinguish the proposed substitute claims from the prior art asserted in the instituted grounds. Rev. Mot. 4. Petitioner notes that one of the proposed amendments, the limitation—the light scattering material "scatters excitation light... relatively more than" light generated by the phosphor—is already found in challenged claim 11, which was found unpatentable above. Rev. Opp. 2. Petitioner contends that this amendment is not responsive to patentability because it was already found in the art in our analysis of the challenged claims. *Id.* Although Petitioner is correct that the limitation has already been found in the prior art, there is no need that the amendment successfully respond to a ground of unpatentability to meet this requirement. We note that all these amendments narrow the claims they are amending and appear to attempt to overcome the allegations asserted against the challenged claim they are amending. Thus, we find that Patent Owner's substitute claims respond to a ground of unpatentability involved in the trial.

3. Do the Amendments Enlarge the Scope of the Claims of the Challenged Patent or Introduce New Matter?

A motion to amend may not introduce new subject matter. 35 U.S.C. § 316(d)(3); 37 C.F.R. § 42.121(a)(2)(ii). Patent Owner contends that the proposed amended claims do not broaden the claim scope. Rev. Mot. 12. Patent Owner provides specific citations to the '678 patent's non-provisional application to demonstrate written description support for the challenged

claims and to demonstrate that no new matter has been introduced in the proposed substitute claims. *Id.* at 5–12.

Petitioner argues that Patent Owner's written description tables contain no explanation of how the citations actually support the claims. Rev. Opp. 4. Petitioner notes that there is no expert testimony to support Patent Owner's assertions. *Id.* Petitioner submits that, for claim 30, Patent Owner "cites 36 distinct paragraphs spanning multiple embodiments without explaining how the disparate disclosures evidence possession of the claim as a whole." *Id.* Petitioner also identifies two specific limitations that lack written description support: (1) proposed claim 31's requirement that phosphor reduction is "by between 20% and 40%;" and (2) "blue light having a wavelength of between 450 nm and 470 nm." *Id.* at 5–7. We find that claim 31 does include new matter, and therefore, does not satisfy this requirement. We also find that Patent Owner has shown sufficiently that the remaining proposed claims 30 and 32–49 meet this requirement. We address the disputed limitations below.

> *a) "wherein the wavelength conversion layer material necessary for a given color emission product is reduced by between 20% and 40%." (claim 31)*

Proposed claim 31 requires that phosphor reduction is "by between 20% and 40%." Petitioner notes that "[t]he specification discloses reduction 'up to 40%.'" Rev. Opp. 5 (citing Ex. 1001, 3:29–32). Petitioner notes that "'Up to 40%' means any value up to 40%—at best, a ceiling without a floor." *Id.* Petitioner argues that Patent Owner's "written-description table cites thirteen paragraphs spanning several embodiments for this limitation without identifying which one purportedly discloses the claimed 20% minimum." *Id.* (citing Rev. Mot. 7). Petitioner contends that Patent Owner

"offers no explanation, let alone expert testimony, because the specification offers no support," and that "[n]othing in the specification identifies 20% at all, let alone as a threshold, a minimum, or a value of any significance." *Id.* Petitioner asserts that "40% appears to be simply the best results the inventors achieved, not a technically significant limit."

Petitioner argues that "[t]he specification does report experimental reductions of approximately 25% and 33% in certain embodiments where the light reflective/scattering material 122 is *included* in the phosphor-containing wavelength conversion layer 118, which is not the claimed configuration wherein the light diffusing layer is separate from wavelength conversion layer." *Id.* at 5–6 (citing Ex. 1001, Fig. 12, 15:31–16:65). Petitioner submits that "[i]solated data points for a different, unclaimed embodiment are not a disclosure of the endpoints for the claimed range." *Id.* at 6 (citing *Indivior UK Ltd. v. Dr. Reddy's Labs. S.A.*, 18 F.4th 1323, 1330–31 (Fed. Cir. 2021)).

We find that the "20% to 40% reduction" lacks written description support and is new matter. The written description requirement is met when the disclosure relied on for support "reasonably conveys to those skilled in the art that the inventor had possession of the claimed subject matter as of the filing date." *Ariad Pharms., Inc. v. Eli Lilly & Co.*, 598 F.3d 1336, 1351 (Fed. Cir. 2010) (en banc) (citation omitted). "[T]he level of detail required to satisfy the written description requirement varies depending on the nature and scope of the claims and on the complexity and predictability of the relevant technology." *Id.* The test for written description requires an "objective inquiry into the four corners of the specification from the perspective of a person of ordinary skill in the art." *Id.*

Patent Owner identifies paragraphs 11, 43, 60, 74, 75, 76, 86, 87, 95, 97, 100, 107, and 112 of the originally filed Specification as support for this limitation. *See* Rev. Mot. 7. Of those cited paragraphs, several disclose that "inclusion of a diffusing layer with the wavelength conversion layer can reduce the quantity of phosphor material required to generate a given color emission product, e.g., by up to 40%," Ex. 1004, 45, ¶ 11; *see also id.* at 66, ¶ 75 (same), and "the use of a light diffusing layer can substantially reduce the quantity of phosphor material required to generate a selected color of emitted light," *id.* at 51, ¶ 43; *see also id.* at 65–66. ¶ 74 (same), *id.* at 72, ¶ 87 (same), *id.* at 74, ¶ 95 (same), *id.* at 75 ¶ 97 (same), *id.* at 77, ¶ 100 (same), *id.* at 80, ¶ 107 (same), *id.* at 81–82, ¶ 112 (same). Other citations do not mention any percentage reduction or even any reduction in phosphor but merely note that the reflection of light back into the phosphor increases the efficiency of the device. *See* Ex. 1004, 45, ¶ 60, *id.* at 66, ¶ 76; *see also id.* at 71–72, ¶ 86 (increasing photon interaction). We note that *none* of Patent Owner's citations in its written description table refer to 20% a reduction or anything close to that value. *See* Rev. Mot. 7.

In its Reply, Patent Owner argues that Petitioner "acknowledge[s] that '[t]he specification discloses reduction of 'up to 40%' and 'experimental reductions of approximately 25% and 33%.'" PO Reply 7 (citing Rev. Opp. 5–6). Patent Owner asserts that "[t]he claimed range of 20% to 40% falls within the broader range of 'up to 40%' disclosed in the specification and captures both of the specifically described examples that Petitioners cite (25% and 33%)." *Id.* Patent Owner contends that Petitioner overlooks precedent that "*in haec numera*" recitation is not necessary. *Id.* (citing Prelim. Guid. 24; *RAI Strategic Holdings, Inc. v. Philip Morris Products, S.A.*, 92 F.4th 1085, 1088 (Fed. Cir. 2024)). Patent Owner argues that

"[s]imilar to *Rai Strategic*, there is no dispute that the '678 patent specification discloses *more* than the claimed range and describes in detail specific examples within that range." *Id.*

We do not find Patent Owner's arguments persuasive. Setting aside that Patent Owner did not identify the 25% and 33% examples in its original motion, a much larger problem exists with Patent Owner's new reliance on those examples. As Petitioner explains, those examples relate to an unclaimed embodiment without a light-diffusing layer. Rev. Opp. 6 (citing Ex. 1001, Fig. 12, 15:31–16:65). The 25% and 33% reduction examples relate to embodiments where:

> a wavelength conversion component comprises particles of a light scattering material (also referred to herein as "light reflecting material") that is incorporated with the phosphor material to enhance photoluminescence light generation by the phosphor material. The enhanced light generation results from the light reflective material increasing the number of collisions of light generated by the light emitter(s) with particles of the phosphor material. The net result is a decrease in phosphor material usage for the light emitting devices.

Ex. 1001, 14:48–57; Ex. 1004, at 66–67, ¶ 77.

In particular, the two experimental examples relate to Figures 12 and 13, which are based on the "prior art" device of Figure 11, which "[u]nlike the device of the invention . . . do[es] not include particles of a light scattering material." Ex. 1001, 14:67–15:2, Fig. 11 (labeled "Prior Art"). Thus, the prior art embodiment of Figure 11 does not include a light diffusing layer with light scattering particles. *See id.* The embodiment of Figure 12 purports to modify the prior art device of Figure 11 by "including particles the light reflective material *with the phosphor material*." Ex. 1001, 15:34–36 (emphasis added). With respect to Figure 12, the Specification explains that "[b]y including particles of light reflecting material with the

phosphor material, this can reduce the amount of phosphor material required to generate a given color emission product, e.g., by up to 33% in some embodiments." *Id.* at 15:34–37. Figure 13 provides a graph of different weight percentage loadings of light reflective material in phosphor conversion layer. *Id.* at 15:42–57. The data in Figure 13 purports to reflect that 25% to 33% less phosphor is needed when certain loads of light reflecting particles are mixed with the phosphor conversion layer. *Id.* at 15:43–16:65. There is no discussion in the Specification that any of the examples plotted in Figure 13 include a light diffusing layer. *Id.* Instead, it merely describes that the examples have light reflecting particles mixed in with the phosphor material in the phosphor conversion layer. *Id.* In contrast, Figure 14 expressly shows and is described as having particles in both the wavelength conversion layer and the light diffusing layer. *See* Ex. 1001, 5:45–48, 17:3–20, Fig. 14. Thus, after careful review of the Specification, we agree with Petitioner that neither of the examples in Figures 12 or Figure 13 are commensurate with the scope of the proposed substitute claims, which all include a separate light diffusing layer.

Given the bare disclosure in the Specification of "up to 40%" and "substantial reduction" and lack of any actual examples for the claimed configuration with the light-diffusing layer, we agree with Petitioner that the Specification lacks adequate support. Rev. Opp. 7. We are mindful that "[m]ere comparison of ranges is not enough, nor are mechanical rules a substitute for an analysis of each case on its facts to determine whether an application conveys to those skilled in the art the information that the applicant invented the subject matter of the claims. In other words, we must decide whether the invention appellants seek to protect by their claims is part of the invention that appellants have described as theirs in the

specification." *In re Wertheim*, 541 F.2d 257, 263 (CCPA 1976). Contrary to Patent Owner's assertions, we find that *RAI Strategic Holdings* is not similar, but provides a helpful contrast. *See* PO Reply 7. In *RAI Strategic Holdings*, the court noted that although the challenged patent's specification did not disclose the claimed range itself, it did expressly disclose both endpoints, which '678 patent does not. Moreover, as Dr. Doolittle persuasively testifies, although light recycling itself is well-known and predictable, "[t]he amount of phosphor 'necessary' for a given color emission is not a fixed value; it depends on numerous other design variables, including the target correlated color temperature, the quantum efficiency of the specific phosphor batch being used, the luminous flux of the LED die, and the overall device geometry." Ex. 1065 ¶ 10. Given the number of potential variables, we find that Petitioner has shown by a preponderance of the evidence that the claimed range of "between 20% and 40%" lacks written description support and would introduce new matter.

Accordingly, we find that Patent Owner has failed to meet the requirement that the motion to amend not introduce new matter for claim 31, and that Petitioner has proved by a preponderance of the evidence that claim 31 is unpatentable for failing to comply with the written description requirement of 35 U.S.C. § 112(a).

b) "blue light having a wavelength of between 450 nm and 470 nm" (All Claims)

In our Preliminary Guidance, we indicated that Petitioner had shown a reasonable likelihood in prevailing in showing that the limitation "blue light having a wavelength of greater than or equal to 440 nm" lacked written description support. Prelim. Guid. 23–24. Patent Owner disputes this preliminary determination, but amended the substitute claims to replace

"greater than or equal to 440 nm" with "between 450 nm and 470 nm" to "streamline the issues before the Board." *See* Rev. Mot. 15. Patent Owner notes that the Specification discloses using a blue light emitting LED that is "operable to generate blue light 28 having a peak wavelength λ_1 in a wavelength range 400 nm to 480 nm (typically 450 nm to 470 nm)." Rev. Mot. 14 (citing Ex. 1001, 7:14–26; Opp. 13; Prelim. Guid. 23). Patent Owner submits that the new limitation—"blue light having a wavelength between 450 nm and 470 nm"— finds support in the originally filed application which describes LEDs that generate blue light "in a wavelength range of 400 nm to 480 nm (typically 450 nm to 470 nm)." PO Reply 3 (citing Ex. 1004, 53, ¶ 47).

Petitioner argues that the "450 nm to 470 nm range . . . lacks written description support, because it covers any emission in that range, not limited to an emission peak, and so is not commensurate with the specification's disclosure." Rev. Opp. 3. Petitioner submits "the alleged support for the revised proposed claims describes off the-shelf blue LEDs with a 'peak wavelength' of 'typically 450 nm to 470 nm.'" *Id.* at 6 (citing Ex. 1001, 7:24–25). However, Petitioner argues "[b]ecause the claims require only "blue light having a wavelength of between 450 nm and 470 nm," not that the "peak wavelength" be in that range, there is a significant mismatch between the specification language and proposed claim language, and a failure of written description. *Id.* at 6–7. Petitioner asserts that "[l]ight sources produce incidental blue light in the 450 nm to 470 nm range even if they do not have a peak wavelength in that range." *Id.* at 7. Petitioner submits that "[f]or example, an LED with a peak wavelength below 440 nm—and thus outside the range in the specification relied upon—will still emit light at wavelengths between 450 nm and 470 nm range—and thus

nonetheless fall within the scope of the revised claims." *Id.* (citing Ex. 2004, Fig. 7, ¶¶ 74, 106). Petitioner contends that "the specification's technical discussion presumes a blue-dominant device, not just incidental blue light." *Id.* Petitioner argues that "[a] device could emit with a peak wavelength well outside of the claimed blue range, yet incidental emission in the 450 nm to 470 nm range would bring it within the scope of the claims, despite being outside the specification's disclosure." *Id.*

We are not persuaded by Petitioner's argument that this limitation is new matter and lacks written description support. Although Petitioner may be correct that the limitation is broad and not limited to merely peak emission, the original application discloses a blue LED that generates light in the "wavelength range of 400 nm to 480 nm" and "typically 450 nm to 470 nm" range. *See* Ex. 1004, 53, ¶ 47. Thus, we agree with Patent Owner that it discloses "excitation light comprising blue light having a wavelength of between 450 nm and 470 nm."

4. Claims Listing

Patent Owner provides a claims listing reproducing each proposed substitute claim. Rev. Mot. Appendix A.

5. Conclusion

For the reasons set forth above, we determine that Patent Owner's Motion to Amend meets the statutory and regulatory requirements set forth in 35 U.S.C. § 316(d) and 37 C.F.R. § 42.121 for claims 30 and 32–49. We further find that Patent Owner has not met the statutory and regulatory requirements for proposed claim 31. Accordingly, we address below whether any of the proposed substitute claims have been shown to be unpatentable.

C. Asserted Grounds of Unpatentability

Petitioner bears the ultimate burden to show that any proposed substitute claims are unpatentable. 37 C.F.R. § 42.121(d)(2).

Petitioner asserts that the proposed substitute claims are unpatentable on the following grounds:

Claims Challenged	35 U.S.C. §	Reference(s)/Basis
30–49	112(a) (written description)	
31	112(b) (Indefiniteness)	
30–39	103(a)	Basin-2007, Basin-2005
40–44, 46–49	103(a)	Basin-2007, Basin-2005, Stokes
30–33, 36, 37, 40, 42, 43, 46–49	103(a)	Krummacher, Shimizu, Stokes
40, 41, 45	103(a)	Hussell, Basin-2007, Van Woudenberg, Stokes
40, 41, 45	103(a)	Hussell, Krummacher, Van Woudenberg, Stokes
40–44, 46–49	103(a)	Basin-2007, Basin-2005, Stokes

1. Lack of Written Description (35 U.S.C. § 112(a))

a) "between 450 nm and 470 nm" (All Claims)

Petitioner contends that all of the substitute claims are unpatentable under 35 U.S.C. § 112(a) for lack of written description support for the phrase "blue light having a wavelength of between 450 nm and 470 nm." Rev. Opp. 6–7. As we explained above, we have found that Patent Owner has demonstrated that this limitation has support in the specification. *See supra* § IV.B.3.b. Thus, we find that Petitioner has not shown by a preponderance of the evidence that claims are unpatentable for lack of

written description support for the term "blue light having a wavelength of between 450 nm and 470 nm."

b) "wherein the wavelength conversion layer material necessary for a given color emission product is reduced by between 20% and 40%" (Claim 31)

As we explained above, we find that Petitioner has shown by a preponderance of the evidence that claim 31 is unpatentable for failing to meet the written description requirement. *See supra* § IV.B.3.a.

2. Indefiniteness (35 U.S.C. § 112(b))

Petitioner argues that claim 31 is indefinite under 35 U.S.C. § 112(b), because it fails to "inform, with reasonable certainty, those skilled in the art about the scope of the invention." Rev. Opp. 8 (quoting *Nautilus, Inc. v. Biosig Instruments, Inc.*, 572 U.S. 901 (2014)). Petitioner notes that the Preliminary Guidance addressed the written description for phosphor reduction, finding that "the baseline is the wavelength conversion layer material before the reduction, and that any reduction suffices." *Id.* (citing Prelim. Guid. 17–18). Petitioner argues that in contrast with claim 30, the specific "20% to 40%" range recited in claim 31 presents a different issue. *Id.* Petitioner asserts that "[c]laiming a specific percentage range—as opposed to "any reduction"—requires a methodology to quantify the reduction." *Id.* Petitioner contends that "[c]laim 31 provides none," and asks "How is "20% to 40%" measured? The percentage is unitless, and 'quantity' could refer to mass, volume, or particle count." *Id.* Petitioner argues that "[c]laim 31 also leaves unclear whether the reduction applies to the phosphor alone or the entire wavelength conversion layer." *Id.* Petitioner asserts that "[a] component might fall inside the claimed range under one measure and outside under another," and "[t]he specification

identifies no governing methodology." *Id.* at 8–9. Petitioner submits that when there are multiple methods for determining whether a claim limitation is met and they lead to different results without guidance, then the claim is indefinite. *See id.* at 9 (citing *Akamai Techs., Inc. v. MediaPointe, Inc.*, No. 24-1571, slip op. at 15 (Fed. Cir. Nov. 25, 2025)).

Patent Owner responds that these arguments are like the arguments regarding "average particle size," which were rejected in the Preliminary Guidance and by the District Court. PO Reply 7–8. (citing Prelim. Guid. 4–5; Ex. 1044, 12). Patent Owner argues that the same result should occur here. *Id.* at 8.

We agree with Petitioner that claim 31 fails to inform a person of ordinary skill with reasonable certainty of the scope of the invention. *See Nautilus*, 572 U.S. at 910. We agree with Petitioner that renders claim 31 indefinite because neither the claim nor the Specification provides any methodology to determine how to quantify and measure the claimed reduction.[15] *See Dow Chem. Co. v. Nova Chem. Corp. (Canada)*, 803 F.3d 620, 634–35 (Fed. Cir. 2015).

---

[15] We note that there are certain ambiguities in claims 30 and 31. Claims 30 and 31 discuss reducing "the wavelength conversion layer material." Rev. Mot. A1–A2. However, there is no antecedent basis for "the wavelength conversion layer material." Claim 30 does recite that "a wavelength conversion layer comprising particles of at least one photoluminescence material." Thus, it is unclear if "the wavelength conversion layer material" is referring to the "at least one photoluminescence material," to some other material, or to a combination of the photoluminescence material and some other unclaimed material. Second, it is unclear whether the reduction in claim 31's "wherein the wavelength conversion layer material necessary for a given color emission product is reduced by between 20% and 40%" is referring to the reduction caused the "portion of excitation light generated by

We begin with the language of the claims. Here, the claims contain no indication for: (1) determining what amount of "wavelength conversion layer" is "necessary," (2) how the "given color emission product" is to be selected, or (3) what the baseline is for which the "between 20% and 40%" reduction is to be measured. In the Preliminary Guidance, we noted that the language now in proposed claim 30—"reduces the wavelength conversion layer material necessary for a given color emission product"—"does not specify a metric; it calls for *any* reduction in the wavelength conversion layer necessary for a given color emission product." Prelim. Guid. 17. However, while "any reduction" may suffice for claim 30, the proposed language for claim 31 requires quantification of a particular range. Thus, the lack of a baseline for selecting the amount of "wavelength conversion material" or guidance on selecting the "given color emission product" is more problematic for claim 31 than for claim 30.

The Specification of the '678 patent provides little assistance in clarifying how these quantities are to be measured. The only thing close to guidance in answering these questions is the Specification's discussion of Figure 13. As discussed above with respect to the written description support for claim 31, we explained that Figure 13 relates to an unclaimed embodiment of the invention without a light-diffusing layer, so it is unclear how much of its teachings apply to claim 31. *See supra* at 82–83. Figure 13 is reproduced below.

---

the light emitting device and directed back at the wavelength conversion layer" or just a reduction in general. Although these problems do not render claim 31 indefinite because the parties appear to agree that "wavelength conversion material" refers to the phosphor and claim 31's reduction is caused by the light directed back by the light-diffusing layer, they speak to the imprecise drafting of this limitation.

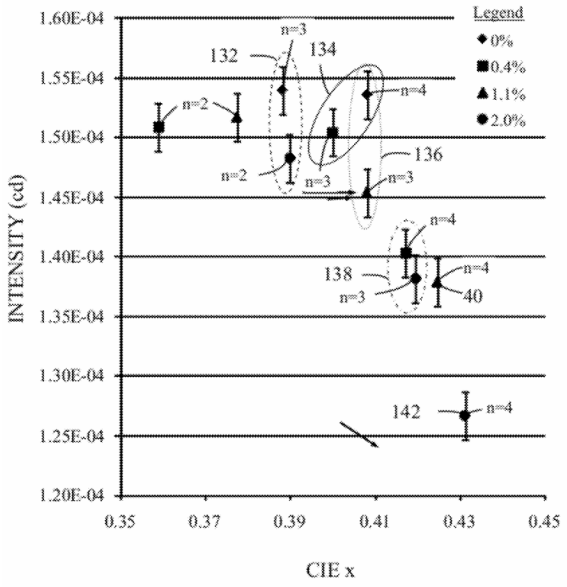

FIG. 13

Figure 13 is a plot of emission intensity versus chromaticity CIE[16] x for a light emitting device for different weight percent loadings of light reflective material. Ex. 1001, 15:42–45. The chart also indicates different thicknesses of the phosphor layer (indicated by the "n="). *Id.* at 15:55–57. The Specification states that "[t]he ovals 132, 134, 136, 138 are used to group data points for emission products that have substantially the same intensity and CIE_x values." *Id.* at 16:7–9. However, the Specification provides no guidance as to why these color emissions were selected, whether CIE_x must be used as the proper measure of the color emission product, and whether intensity must also be considered in evaluating the reduction in phosphor. Most importantly, the Specification provides no guidance what criteria were used to determine if data points were "substantially similar" for purposes of

[16] C.I.E. refers to Commission Internationale de l'Eclairage. *See* Ex. 1001, 5:24–25. Dr. Schubert explains in his textbook this is a standardized way of measuring color. *See* Ex. 2014, 292–293.

this evaluation. *See id.* at 16:5–46. Indeed, "[t]he specification offers no indication, thus leaving the skilled artisan to consult the 'unpredictable vagaries of any one person's opinion.'" *Interval Licensing LLC v. AOL, Inc.*, 766 F.3d 1364, 1374 (quoting *Datamize, LLC v. Plumtree Software, Inc.*, 417 F.3d 1342, 1350 (Fed. Cir. 2005)). Thus, to the extent Figure 13 is relevant to the claimed invention, it leaves us with more questions than answers.

After this review of the intrinsic evidence, we find Dr. Doolittle's testimony regarding the broader limitation of "reduces the wavelength conversion material necessary" to be particularly cogent and probative. Dr. Doolittle testified:

> A POSA reading this limitation would immediately ask, "reduced relative to what?". The patent does not specify whether the reduction is relative to a device without a diffusing layer, a prior art device, or a device with a different type of diffusing layer. The claim provides no answer, leaving a POSA to speculate about the metes and bounds of the invention.

Ex. 1065 ¶ 9.

Dr. Doolittle continued that:

> This term lacks an objective test protocol. A POSA cannot objectively test whether a given device meets this limitation because the patent does not define a baseline or a method for comparison. The amount of phosphor "necessary" for a given color emission is not a fixed value; it depends on numerous other design variables, including the target correlated color temperature (CCT), the quantum efficiency of the specific phosphor batch being used, the luminous flux of the LED die, and the overall device geometry. As I testified in my deposition, determining whether a reduction has been achieved would require a "substantial amount of experimentation" without any guideposts from the patent on how to conduct the experiment or what to compare the results against.

Id. ¶ 10.

We agree with Dr. Doolittle that neither the proposed claims nor Specification provide sufficient guidance to a person of ordinary skill in the art "to inform, with reasonable certainty . . . about the scope of the invention." *Nautilus*, 575 U.S. at 901. As we have explained, claim 31 and the Specification are rife with ambiguities as to how the claimed range should be measured. "Such ambiguity falls within 'the innovation-discouraging 'zone of uncertainty' against which [the Supreme Court] has warned.'" *Interval Licensing*, 766 F.3d at 1374 (quoting *Nautilus*, 572 U.S. at 911).

Finally, we agree with Patent Owner that District Court's *Markman* Order (Ex. 1044) is also instructive for our analysis. PO Reply 7–8. However, we disagree with Patent Owner that it supports their position. In the *Markman* Order, the district court addressed whether the claim term "an average particle size that improves the OFF state white appearance of the wavelength conversion component," as it is used in claim 21, was indefinite. Ex. 1044, 12. Petitioner argued this term was indefinite because the '678 patent failed to disclose any methodology for measuring average particle size, and that there are different methodologies for measuring "average particle size" that generate different results. *Id.* at 12–13. The district court rejected this argument finding that "[c]laim 21 does not require any particular way of measuring average particle size," and that "whatever way is selected, the only relevant question pursuant to the plain language of claim 21 is whether the average particle size 'improves the OFF state white appearance of the wavelength conversion component." *Id.* at 13. The district court reasoned that, in the context of the full claim limitation, "average particle size" was not indefinite because "rather than requiring measurement of the variable/cause (the average particle size)," the claim

"only requires identifying whether the desired effect occurs." *Id.* The district court emphasized that unlike the cases cited by the defendants, the claim did "not require any particular value or range of 'average particle size.'" *Id.* at 14. The district court concluded by contrasting claim 21 with claim 24. *Id.* at 14–15. The district court noted that claim 24 required a particular size, so that

> If one way of measuring is used, the light scattering material may have the average particle size required by Claim 24 because it falls within one of the required ranges. If another way of measuring is used, however, the same light scattering material may not have the average particle size required by Claim 24 because it does not fall within one of the required ranges.

Id. at 15.

The district court noted that "[i]n Claim 21, by contrast, no specific value of average particle size is identified, and instead the only relevant question is whether the average particle size *however measured* 'improves the OFF state white appearance of the wavelength conversion component.'" *Id.*

Like claim 24, claim 31 requires a precise range of values. Depending on the methodology employed the reduction may in phosphor may fall within the required range or not. In contrast, claim 30 more closely resembles claim 21, if there is *any* reduction in phosphor, however measured, the reduction falls within the claim limitation.

In sum, we find that Petitioner has shown that claim 31 is indefinite because here neither the Specification nor claim provides any guidance as to what methodology should be used to measure the claimed reduction in "wavelength conversion layer material." *See Dow Chem.*, 803 F.3d at 631–635.

3. Obviousness

Petitioner contends proposed substitute claims 30–49 would have been obvious over various combinations of prior art. Opp. 14–25. For the reasons that follow, on this record Petitioner has shown by a preponderance of the evidence that proposed substitute claims 30, 32–49 are unpatentable as obvious. Petitioner groups its obviousness challenges to claims 30–49 into three groups: (1) "the phosphor reduction claims" (claims 30–39); (2) the "preferential scattering claims" (claims 40–45); and (3) the "hybrid claims" (claims 46–49).

a) Claims 30–39

Proposed claim 30 is an independent claim and is proposed as a substitute for claim 1. Claim 30 amends claim 1 by adding two new limitations and amending one limitation. In particular, claim 30 adds "wherein the light diffusing layer is configured such that a portion of excitation light generated by the light emitting device is directed back at the wavelength conversion layer" and "wherein the portion of excitation light generated by the light emitting device and directed back at the wavelength conversion layer reduces the wavelength conversion layer material necessary for a given color emission product." Rev. Mot A1. Claim 30 also replaces the limitation of claim 1 requiring "a portion of excitation light comprising blue light having a wavelength of greater than 440 nm" with "a portion of excitation light comprising blue light having a wavelength of *between 450 nm and 470 nm*."

(1) Claim 30

(a) "the light diffusing layer is configured such that a portion of excitation light generated by the light emitting device is

directed back at the wavelength conversion layer"

Petitioner contends that "[t]his limitation simply recites the well-known phenomenon of backscattering, a result flowing from the use of known diffusing materials," and "Basin-2007 and Krummacher disclose adding TiO_2 scattering particles in a layer over a phosphor, and therefore render obvious this back scattering effect." Opp. 14–15 (citing Ex. 1005 ¶ 13, Fig. 2; Ex. 1007 ¶ 39; Ex. 2026 ¶ 53). In our Preliminary Guidance, we found that Petitioner has shown a reasonable likelihood that the combination of Basin-2007 and Basin-2005, or the combination of Krummacher, Shimizu, and Stokes, renders obvious proposed substitute claim 30. Prelim. Guid. 25–26. Neither party further addresses this limitation.

On the complete record, we agree with Petitioner's contentions that the prior art of the original grounds teaches or suggests this limitation. For example, Basin 2007 discloses that "the TiO_2 particles scatter the light from the LED," and "[i]f the percentage of the particles keeps increasing, the encapsulant becomes more and more like a diffusing reflector, reflecting most light back into the LED and out the sides." Ex. 1005 ¶¶ 37, 46. Krummacher discloses "a light-scattering translucent layer" that "contains light-scattering particles" such as "particles of TiO2," "to bring about the light-scattering effect." Ex. 1007 ¶¶ 6, 10. We note that this is consistent with other prior art in the record, for example, Tong[17] teaches "a diffuser that scatters light 'back towards the phosphor layer.'" Opp. 15 (citing

[17] Tong et al., U.S. Patent No. 9,310,030 B2 (iss. Apr. 12, 2016, filed Oct. 8, 2010, provisional application No. 61/386,437, filed Sept. 24, 2010 (Ex. 1064).

Ex. 1060, 18:7–14, 20:58–62, 33:35–37; Ex. 1064 ¶¶ 142, 154, 221). Thus, we find that the above-cited portions of Basin-2007 or Krummacher teach or suggest that "the light diffusing layer is configured such that a portion of excitation light generated by the light emitting device is directed back at the wavelength conversion layer." Accordingly, we find that Petitioner has shown by a preponderance of the evidence that the combinations of Basin-2007 and Basin-2005 and Krummacher, Stokes, and Shimizu teach or suggest this limitation. *See* Ex. 1065 ¶¶ 4–8.

(b) "between 450 nm and 470 nm"

Petitioner notes that "PO narrowed the required wavelength range in response to the Preliminary Guidance's determination of no written description, but the new range—'between 450 nm and 470 nm'—does nothing with respect to obviousness, as Petitioners have already shown that blue LEDs with peaks in this range were typical." Rev. Opp. 2 (citing Ex 1002 ¶ 121; Ex. 1010, 27:4–5, 28:55, 29:45; Ex. 1001, 7:24–25). Patent Owner does not argue otherwise. *See* PO Reply. Indeed, Dr. Doolittle testifies:

> Consistent with the state of the art as discussed above, including Shimizu, a POSA would understand that the blue light LEDs emitted from conventional white light LED light sources typically had wavelengths greater than 440 nm. Indeed, that is consistent with the wavelengths disclosed throughout the prior art for the blue light emitted by blue light LED chips. (See EX1010, figs.; EX1010, 23:43, 27:4-5, 28:55, 25:24-25, 29:45 (peaks at 450, 460, or 470nm); EX1006, ¶[0030] ("It is assumed the LEDs emit a blue light in the range of 420-490 nm."); EX1008, 4:37-40 (420-480nm), 6:62-67 (peaks of 450nm or 480nm).)

Ex. 1002 ¶ 121.

We find this testimony well-reasoned and supported by the prior art. Therefore, we find that Petitioner has shown by a preponderance of the evidence that this limitation would have been obvious in view of the combinations of Basin-2007 and Basin-2005 and Krummacher, Stokes, and Shimizu.

> *(c) "wherein the portion of excitation light generated by the light emitting device and directed back at the wavelength conversion layer reduces the wavelength conversion layer material necessary for a given color emission product" (claim 30)*

Petitioner contends this limitation is rendered obvious in view of Grounds 1 and 3 as presented in the '1357 IPR Petition. Rev. Opp. 12; Opp. 19. In other words, Petitioner contends that this limitation would have been obvious over the combination of Basin-2007 and Basin-2005 (Ground 1), or over the combination of Krummacher, Shimizu, and Stokes (Ground 3). *See* Pet. 18. Petitioner contends that phosphor reduction is "the natural result" of the prior art's light-recycling structure, reflecting "a fundamental principle of engineering . . . that increasing the efficiency of a process allows for the use of less input material to achieve the same output" and "a well-known engineering trade-off." Rev. Opp. 12 (quoting Prelim. Guid. 25–27); Opp. 16 (citing Ex. 1065 ¶¶ 11–15). Specifically, Petitioner's expert testified that it was "a well-known engineering trade-off that this increased conversion efficiency could be leveraged in one of two ways: either to increase the total light output for a given amount of phosphor, or to reduce the amount of phosphor material needed to achieve a target light output." Ex. 1065 ¶ 14. Petitioner argues that "a proposed obviousness ground renders obvious a claim limitation when the limitation is 'the natural result'

of the obviousness ground." Opp. 17 (quoting *Persion Pharms. LLC v. Alvogen Malta Operations Ltd.*, 945 F.3d 1184, 1191, (Fed. Cir. 2019)). Petitioner also contends that the benefits of light recycling to increase conversion efficiency and reducing phosphor material would have been known to persons of ordinary skill. *Id.* at 18–19 (citing Ex. 1057, 5:6–10, 5:14–15; Ex. 1058, 1–3). Petitioner notes that Vriens[18] teaches that reflecting "UV/blue light back to the phosphor... makes it possible to reduce the phosphor grain density somewhat." Rev. Opp. 13 (citing Ex. 1057, 5:6–15). Petitioner also submits that Oh[19] teaches "recycl[ing] unabsorbed transmitted blue" back into the phosphor, achieving the same color output with less than half the phosphor concentration. *Id.* (citing Ex. 1058, 1–3).

Patent Owner argues that Petitioner's contentions rest on conclusory expert testimony and impermissible hindsight bias. Rev. Mot. 16–18; PO Reply 5–6. Patent Owner asserts that Petitioner's reliance on the Tong reference to teach "directing excitation light back at the phosphor in order to reduce the wavelength conversion layer material" is misplaced. Instead, Patent Owner contends that "Petitioners identify only that Tong's disclosure 'can lead to increased amounts of down conversion and thus a shift in color temperature.'" Rev. Mot. 16 (citing Opp. 16; Ex. 1060, 20:58–62). Patent Owner argues that "[a] shift in color temperature is not the same as a reduction in the wavelength conversion material necessary for a given color emission product." *Id.* Patent Owner asserts that Petitioner's general

---

[18] Vriens et al., U.S. Patent No. 5,813,753, issued Sept. 29, 1998 ("Vriens," Ex. 1057).

[19] Jeong Rok Oh, et al., *Full down-conversion of amber-emitting phosphor-converted light-emitting diodes with powder phosphors and a long-wave pass filter*, Optics Express Vol. 18, Issue 11, pp. 11063–11072 (2010) ("Oh," Ex. 1058).

statements about increasing efficiency does not disclose the claimed reduction in wavelength conversion layer material, but relies only on Dr. Doolittle's testimony. *Id.* at 16–17 (citing Opp. 16; Ex. 1065).

We agree with Petitioner's contentions that this claim "is rendered obvious based on the structure rendered obvious by" the original grounds. Rev. Opp. 12. As Dr. Doolittle testifies, it was known that scattering material will scatter light back into the phosphor. *See* Ex. 1065 ¶¶ 4–8. This is supported by the disclosure of Tong. *See* Ex. 1060, 20:58–62; Ex. 1064 ¶ 154. Although Patent Owner is correct that Tong does not expressly disclose "reducing the amount of wavelength conversion material," it does support Dr. Doolittle's contention that light reflected back into the phosphor will be down converted from blue into longer wavelengths. *See* Ex. 1065 ¶ 13. Moreover, Petitioner also cites Vriens and Oh, which both support Dr. Doolittle's assertion that a natural result of including a light diffusing layer that reflects light back into the phosphor will be a reduction in the amount of phosphor needed. *See* Ex. 1057, 5:6–15; Ex. 1058, 1–3; Ex. 1065 ¶¶ 11–15. Thus, contrary to Patent Owner's assertions, we find Dr. Doolittle's testimony well-supported and reasoned. As we explained in our Preliminary Guidance, this limitation does not specify a metric, and "any reduction suffices" to meet this limitation. *See* Prelim. Guid. 17. We find that Petitioner has shown by a preponderance of the evidence that the combination of Basin-2007 and Basin-2005, or the combination of Krummacher, Shimizu, and Stokes, renders obvious this limitation of proposed substitute claim 30.

(d) Summary

We find that Petitioner has shown by a preponderance of the evidence that combination of Basin-2007 and Basin-2005, or the combination of

Krummacher, Shimizu, and Stokes teach or suggest all the limitations of claim 30, and that a person of ordinary skill in the art would have been motivated to combine the references in the manner proposed. Weighing the evidence of obviousness against the evidence of objective indicia of nonbviousness discussed above, we find that Petitioner has shown by a preponderance of the evidence that claim 30 would have been obvious over the combination of Basin-2007 and Basin-2005, or the combination of Krummacher, Shimizu, and Stokes.

(2) Claim 31

Proposed Claim 31 depends from proposed claim 30 and further recites the limitations that were in dependent original claim 2 and an additional amendment "wherein the wavelength conversion layer material necessary for a given color emission product is reduced by between 20% and 40%." Rev. Mot. A2.

Petitioner contends that neither endpoint of the 20% and 40% range "has any apparent significance—the specification discloses reduction 'up to 40%' in passing and says nothing about 20%." Rev. Opp. 14 (citing Ex. 1001, 3:29–32). Petitioner argues that "[t]he prior art established that light-recycling structures inherently enable phosphor reduction," and "Vriens discloses that reflecting blue light back to the phosphor 'makes it possible to reduce the phosphor grain density.'" *Id.* (citing Ex. 1057, 5:6–15). Petitioner asserts that "[b]ecause the prior art discloses the general relationship that light recycling reduces necessary phosphor, discovering the optimum degree of reduction is routine experimentation, not invention." *Id.* citing *In re Aller*, 220 F.2d 454, 456 (CCPA 1955); *In re Peterson*, 315 F.3d 1325, 1329–30 (Fed. Cir. 2003)). Petitioner submits that "[t]argeting a particular percentage does not confer patentability."

We agree with Patent Owner that Petitioner has failed to show by a preponderance of the evidence that claim 31 would have been obvious based on the combinations of Basin-2007, Basin-2005, and Stokes or Krummacher, Shimizu, and Stokes. PO Reply 8. As Petitioner acknowledges, none of the asserted references disclose the claimed range of phosphor reduction. Rev. Opp. 14. Instead, Petitioner relies on *Aller*, which holds that "where the general conditions of a claim are disclosed in the prior art, it is not inventive to discover the optimum or workable ranges by routine experimentation." *Aller,* 220 F.2d at 456. However, before a variable can be optimized through routine experimentation to render obvious a claimed feature, the variable must be shown to be result-effective. *See In re Urbanski*, 809 F.3d 1237, 1242 (Fed. Cir. 2016). Here, the amount of phosphor reduction appears to be the result, not the variable being optimized. *See In re Antonie*, 559 F.2d 618, 620 (CCPA 1977). Thus, we find that Petitioner has not provided adequate reasoning to show by a preponderance of the evidence that claim 31 would have been obvious as routine optimization. *See In re Stepan Co.*, 868 F.3d 1342, 1346 (Fed. Cir. 2017) (reversing a rejection based on routine optimization because the rejection failed to explain why it would have been routine optimization to arrive at the claimed invention).

(3) Claims 32–39

Claims 32–39 are only amended to change their dependency. Otherwise, these claims only recite limitations we already found disclosed in the prior art above. Patent Owner does not raise any other separate arguments regarding claims 32–32 other than those we have considered above with respect to claim 30. *See* PO Reply. We do not find Patent Owner's arguments availing, as explained above. We find that Petitioner

has shown by a preponderance of the evidence that Basin-2007 and Basin-2005 teach each the limitations of those claims, and that there would have been a motivation to combine the references in the manner suggested with a reasonable expectation of success. *See supra* § III.G (finding Basin-2007 and Basin-2005 would render obvious claims 3, 7, 9, 10, 16–18).

We find that Petitioner has shown that the combination of Krummacher, Shimizu, and Stokes teach the limitations of claims 32, 33, 36, and 37 and that there would have been a motivation to combine the references in the manner suggested with a reasonable expectation of success. *See supra* § III.J.1 (finding the combination of Krummacher, Shimizu, and Stokes would render obvious claims 3, 4, 10, and 16). Accordingly, we find that Petitioner has shown by a preponderance of the evidence that claims 32–39 would have been obvious over Basin-2007 and Basin-2005 and Krummacher, Shimizu, and Stokes (as detailed above).

b) Claims 40–45

(1) Claims 40 and 45

Claims 40 and 45 are proposed as substitute independent claims for claims 19 and 29, respectively. Like Claim 30, Claims 40 and 45 also replaces the limitation of claims 19 and 29 requiring "a portion of excitation light comprising blue light having a wavelength of greater than 440 nm" with "a portion of excitation light comprising blue light having a wavelength of *between 450 nm and 470 nm*." Rev. Mot. A4, A6. Claims 40 and 45 also recite

(a) "between 450 nm and 470 nm"

We explained above that we find that Petitioner has shown that this limitation would have been obvious in view of the references asserted. *See supra* IV.C.3.a.1.b. We find that the same reasoning applies here as well.

> *(b) "wherein the light scattering material scatters excitation light…relatively more than…light generated by the at least one photoluminescence material." (claims 40 and 45)*

Petitioner argues that "[p]referential blue-light scattering is a known property of the nano-scale TiO_2 particles the prior art already discloses; the Board found this limitation obvious over Basin-2007 or Krummacher combined with Stokes." Rev. Opp. 15 (citing Prelim. Guid., 29–31). Petitioner contends this new limitation, and claims 40 and 45 as a whole, are also rendered obvious in view of the Grounds 2 and 4 as presented in the '1357 IPR Petition, in further view of Stokes (i.e., essentially the same grounds presented in the '260 IPR Petition for claim 11). *See* Opp. 22; Prelim. Guid. 29–31. In other words, Petitioner contends that claim 40 Basin-2007, Basin-2005 and Stokes, Krummacher, Shimizu, and Stokes, Hussell, Basin-2007, Van Woudenberg, and Stokes, Hussell, Krummacher, Van Woudenberg, and Stokes. *See* Pet. 18. Petitioner further contends that claim 45 would have been obvious over the combination of Hussell, Basin-2007, van Woudenberg, and Stokes, or the combination of Hussell, Krummacher, van Woudenberg, and Stokes. *See id.* Petitioner contends that "the concept of selecting a particle size to maximize scattering of blue light to aid in conversion was known in the art" such as Stokes. Opp. 21–22; Rev. Opp. 15. We have this issue in detail above in our analysis of claim 11. *See supra* III.H.

As we explained above, Stokes discloses radiation scattering particles having "a size such that the particles preferentially scatter blue or UV LED light a compare to yellow, green, red or white light from the luminescent material." Ex. 1008, 7:1–4; *see also* Rev. Opp. 16 (citing Ex. 1008, 7:1–4);

Opp. 22 (quoting Ex. 1008, 7:1–4). Referring to Figure 6 of Stokes illustrating the relationship between the particle diameter and the wavelength of the scattered light for TiO_2 particles, Stokes explains that "100 to 200 nm particles have at least a 50% greater scattering power for blue radiation (i.e., such as that emitted by a blue emitting LED) than green or red (or for that matter yellow) radiation (i.e., such as that emitted by the phosphor or dye)." Ex. 1008, 7:13–17. According to Stokes, this particle size range is advantageous because it enhances the scattering of the radiation source radiation while it decreases the amount of scattering of the luminescent material radiation. *Id.* Therefore, the lamp radiation output is rendered more uniform because a greater amount of radiation source radiation is scattered toward the luminescent material, while a lesser amount of the luminescent material radiation that is emitted downward toward the radiation source is scattered back toward the luminescent material. *Id.* at 7:17–26.

Petitioner further contends that "Basin-2007 and Krummacher both disclose TiO_2 nanoparticles" and "[a] POSITA would, accordingly, have been motivated to select a particle size that scatters more blue light than converted light." Rev. Opp. 16; Opp. 22; *see also* Ex. 1005 ¶ 32; Ex. 1007 ¶ 39.

Patent Owner argues that Stokes teaches away from the proposed combinations. *See* Rev. Mot. 18–20; PO Reply 9–12. This argument is essentially the same argument we considered above with respect to claim 11. *See supra* § III.J.2. As we explained in detail above, we disagree with Patent Owner that Stokes teaches away from the combination with Basin-2007 and Krummacher in manner proposed. *Id.*

Accordingly, we find that Petitioner has shown by a preponderance of the evidence that Basin-2007 or Krummacher, in combination with Stokes

teaches or suggests "wherein the light scattering material scatters excitation light from the one or more solid-state light emitters relatively more than the light scattering material scatters light generated by the at least one photoluminescence material" and a person of ordinary skill would have been motivated for such a combination. Thus, Petitioner has shown by a preponderance of the evidence that the combination of Basin-2007, Basin-2005, and Stokes, Krummacher, Shimazu, and Stokes, Hussell, Basin-2007, van Woudenberg, and Stokes, or the combination of Hussell, Krummacher, van Woudenberg, and Stokes, renders obvious proposed substitute claim 40. Petitioner has also shown by a preponderance of the evidence that the combination of Hussell, Basin-2007, van Woudenberg, and Stokes, or the combination of Hussell, Krummacher, van Woudenberg, and Stokes, renders obvious proposed substitute claim 45.

(2) Claims 41–44

Claims 41–44 are proposed as substitute claims for claims 20, 21, 25, and 26, respectively. The only amendment made to these claims is to change their dependency to proposed substitute claim 40 from claim 19, from which they originally depended. *See* Rev. Mot. A5. Claim 20 was originally challenged under the combinations of Basin-2007 and Basin-2005, Hussell, Basin-2007, and Van Woudenberg, and Hussell, Krummacher, and Van Woudenberg. *See supra* § II.E. Claims 21 and 25 were challenged under the combinations of Basin-2007 and Basin-2005, and Krummacher, Shimizu, and Stokes. *See id*. Claim 26 was challenged under the combination of Basin-2007 and Basin-2005. *Id.*

Petitioner proposes relying on Stokes as discussed above with respect to claim 40. Patent Owner does not raise any other separate arguments regarding claims 41–44 other than those we have considered above with

respect to claim 40. *See* PO Reply. We do not find Patent Owner's arguments availing, as explained above.

We find that Petitioner has shown by a preponderance of the evidence that the combination of Basin-2007, Basin-2005 and Stokes teaches each the limitations of claims 41–44, and that there would have been a motivation to combine the references in the manner suggested with a reasonable expectation of success. *See supra* § III.G. We also find that Petitioner has shown by a preponderance of the evidence that the combination of Krummacher, Shimizu, and Stokes teaches each the limitations of claims 42 and 43, and that there would have been a motivation to combine the references in the manner suggested with a reasonable expectation of success. *See supra* § III.J.1. We further find that Petitioner has shown by a preponderance of the evidence that the combination of Hussell, Basin-2007, Van Woudenberg, and Stokes teaches each the limitations of claim 41, and that there would have been a motivation to combine the references in the manner suggested with a reasonable expectation of success. *See supra* § III.I. Finally, we find that Petitioner has shown by a preponderance of the evidence that the combination of Hussell, Krummacher, Van Woudenberg, and Stokes teaches each the limitations of claim 41, and that there would have been a motivation to combine the references in the manner suggested with a reasonable expectation of success. *See supra* §§ III.K.

Accordingly, we find that Petitioner has shown by a preponderance of the evidence that claims 41–44 would have been obvious over Basin-2007, Basin-2005, and Stokes, and Krummacher, Shimizu, and Stokes, Hussell, Basin-2007, Van Woudenberg, and Stokes, and Hussell, Krummacher, Van Woudenberg, and Stokes, as detailed above.

c) Claims 46–49

Claims 46–49 are proposed as substitute claims for claims 11–14. The only amendment made to these claims is to change their dependency to the corresponding substitute claim that Patent Owner proposes for the claims from which they originally depended. *See* Rev. Mot. A7. Claims 11–14 were originally challenged under Basin-2007, Basin-2005, Strokes, and Krummacher, Shimizu, and Stokes. *See supra* § I.E.

Patent Owner does not raise any other separate arguments regarding claims 46–49 other than those we have considered above with respect to claim 30. *See* PO Reply. We do not find Patent Owner's arguments availing, as explained above. We find that Petitioner has shown by a preponderance of the evidence that Basin-2007, Basin-2005 and Stokes, and Krummacher, Shimizu, and Stokes teach each the limitations of these claims, and that there would have been a motivation to combine the references in the manner suggested with a reasonable expectation of success. *See supra* §§ III.H, III.J.2. Accordingly, we find that Petitioner has shown by a preponderance of the evidence that claims 46–49 would have been obvious over Basin-2007, Basin-2005, and Stokes, and Krummacher, Shimizu, and Stokes.

D. *Conclusion as to Motion to Amend*

For the foregoing reasons, we find that Patent Owner has met the statutory and regulatory requirements set forth in 35 U.S.C. § 316(d) and 37 C.F.R. § 42.121 for claims 30 and 32–49, but not for claim 31. We further find that Petitioner has shown by a preponderance of the evidence that claim 31 is unpatentable under 35 U.S.C. § 112 as lacking written description support and indefinite. Finally, we find that Petitioner has demonstrated by

a preponderance of the evidence that claims 30 and 32–49 are unpatentable as obvious under 35 U.S.C. § 103(a).

V. CONCLUSION

After considering the evidence and arguments presented in the Petition, we determine that Petitioner has established by a preponderance of the evidence that the challenged claims of the ’678 patent are unpatentable as obvious over the combinations of Krummacher, Stokes, and Shimizu and Hussell, Krummacher, Stokes, and Van Woudenberg, notwithstanding Patent Owner’s arguments. We deny Patent Owner’s Motion to Amend.

VI. ORDER

In consideration of the foregoing, it is hereby:

ORDERED that, pursuant to 35 U.S.C. § 318(a), claims 1–3, 6, 7, 9, 10–14, 16–21, 25, 26, and 29 of the '678 patent have been shown to be unpatentable;

FURTHER ORDERED that Patent Owner's Motion to Amend is *denied*; and

FURTHER ORDERED that any party seeking judicial review must comply with the notice and service requirements of 37 C.F.R. § 90.2.[20]

[20] Should Patent Owner wish to pursue amendment of the challenged claims in a reissue or reexamination proceeding subsequent to the issuance of this Decision, we draw Patent Owner's attention to the April 2019 Notice Regarding Options for Amendments by Patent Owner Through Reissue or Reexamination During a Pending AIA Trial Proceeding. *See* 84 Fed. Reg. 16,654 (Apr. 22, 2019). If Patent Owner chooses to file a reissue application or a request for reexamination of the challenged patent, we remind Patent Owner of its continuing obligation to notify the Board of any such related matters in updated mandatory notices. *See* 37 C.F.R. § 42.8(a)(3), (b)(2).

In summary, for IPR2024-01357:

Claim(s)	35 U.S.C. §	Reference(s)/Basis	Claim(s) Shown Unpatentable	Claim(s) Not shown Unpatentable
1–3, 6, 7, 9, 10, 16–21, 25, 26	103(a)	Basin-2007, Basin-2005	1–3, 6, 7, 9, 10, 16–21, 25, 26	
19, 20, 29	103(a)	Hussell, Basin-2007, Van Woudenberg	19, 20, 29	
1-3, 6, 10, 16, 19, 21, 25	103(a)	Krummacher, Stokes, Shimizu	1–3, 6, 10, 16, 19, 21, 25	
19, 20, 29	103(a)	Hussell, Krummacher, Van Woudenberg	19, 20, 29	
Overall Outcome			1–3, 6, 7, 9, 10, 16–21, 25, 26, 29	

For IPR2025-00260:

Claim(s)	35 U.S.C. §	Reference(s)/Basis	Claim(s) Shown Unpatentable	Claim(s) Not shown Unpatentable
1	103(a)	Basin-2007, Basin-2005	1	
11–14	103(a)	Basin-2007, Basin-2005, Stokes	11–14	
1, 11–14	103(a)	Krummacher, Stokes, Shimizu	1, 11–14	
Overall Outcome			1, 11–14	

In summary with respect to the proposed substitute claims:

Motion to Amend Outcome	Claims
Substitute Claims Proposed in the Amendment	30–49
Substitute Claims: Motion to Amend Granted	
Substitute Claims: Motion to Amend Denied	30–49
Substitute Claims: Not Reached	

PETITIONER:

David Radulescu
Andrew Brown
RADULESCU LLP
david@radip.com
andy@radip.com

PATENT OWNER:

Charles McMahon
Thomas DaMario
BENESCH FRIEDLANDER COPLAN & ARONOFF LLP
cmcmahon@beneschlaw.com
tdamario@beneschlaw.com