United States Patent

Saari et al.

[15] **3,636,707**

[45] **Jan. 25, 1972**

[54] **POWER DEVICE**

[72] Inventors: **Oliver E. Saari**, Niles; **Henry Pomernacki**, Northbrook, both of Ill.

[73] Assignee: **Illinois Tool Works Inc.**, Chicago, Ill.

[22] Filed: **July 22, 1970**

[21] Appl. No.: **57,247**

[52] **U.S. Cl.** **60/51**, 92/15, 227/130
[51] **Int. Cl.** **F15b 1/02**
[58] **Field of Search** 60/51; 227/130; 92/8, 14, 15

[56] **References Cited**

UNITED STATES PATENTS

2,814,041	11/1957	Haley	185/38
2,867,086	1/1959	Haley	60/51
3,150,488	9/1964	Haley	60/51

Primary Examiner—Edgar W. Geoghegan
Attorney—Robert W. Beart, Michael Kovac and Jack R. Halvorsen

[57] **ABSTRACT**

A pressure fluid power device for operating handtools having a power reservoir in which a compressible fluid, such as a gas, is maintained under pressure and is employed to impart movement to or actuate, a suitable driving means, such as a drive piston or hammer of a power handtool, through a linkage of a noncompressible driving fluid. The invention further relates to cooperable means for slowing or braking the movement of the drive piston as it approaches its fully extended position to minimize shocks to the body of the device; sealing means within the device; and automatic means for limiting the amount of retraction of the drive piston.

12 Claims, 14 Drawing Figures

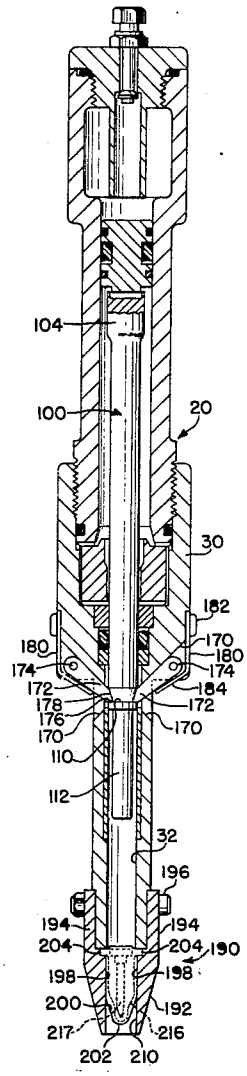

Koki Holdings America Ltd.
Ex. 1012, p. 1

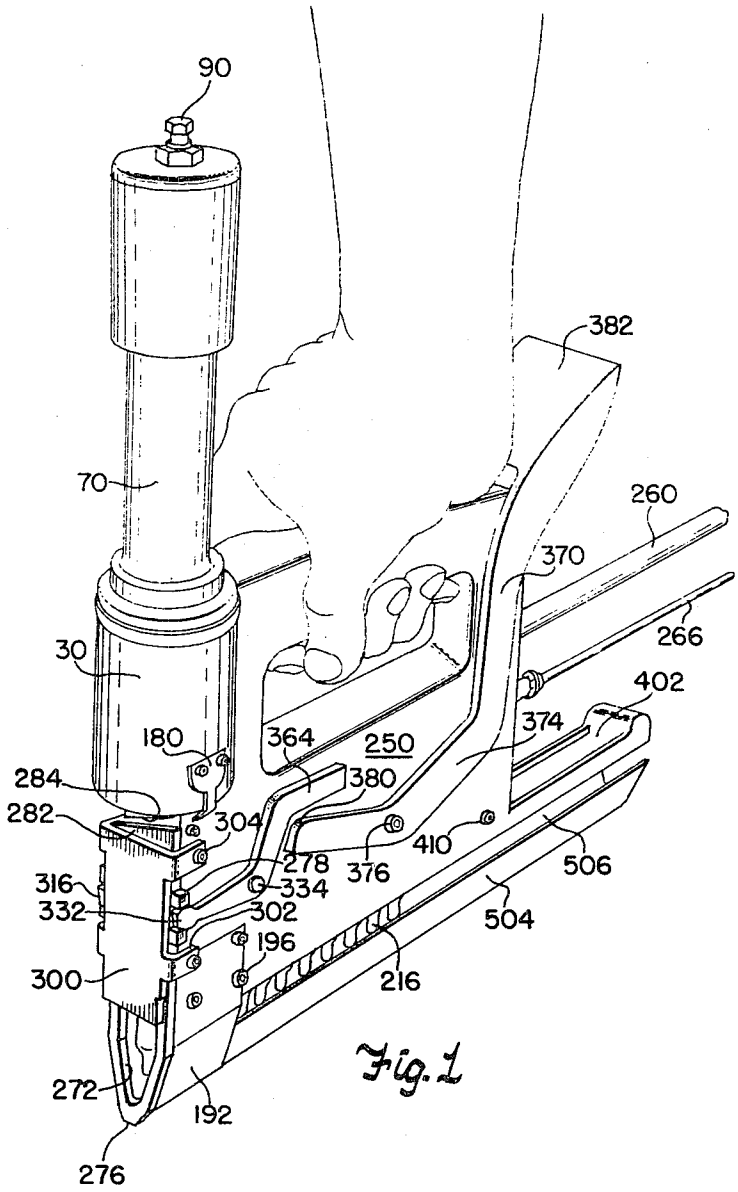

Fig. 1

INVENTORS
Oliver E. Saari
BY Henry Pomernacki
Jack R. Halvorsen
Robert W. Kearl
Their Att'ys

Fig. 2

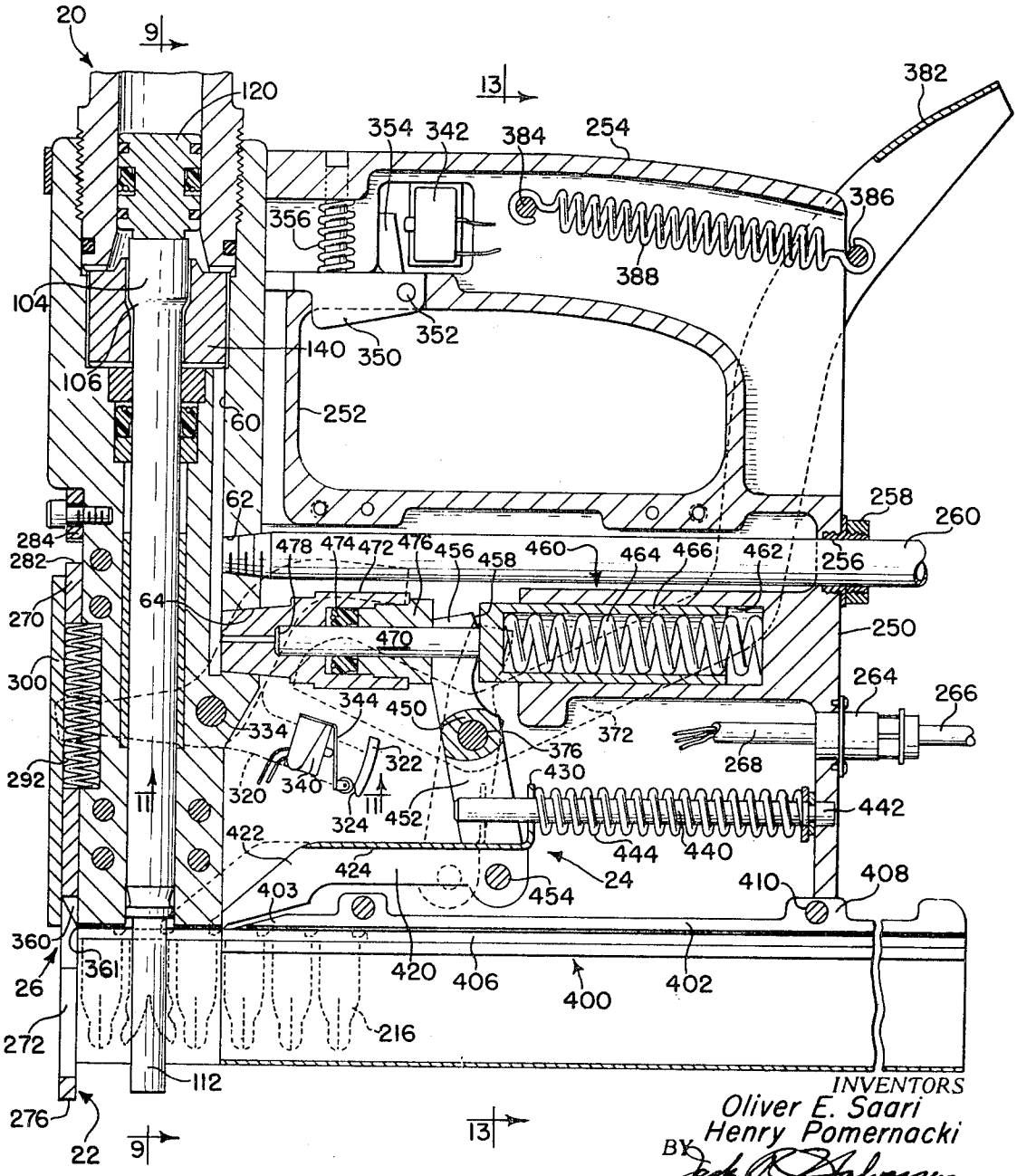
20
9
120
13
382
354
342
384
254
386
356
388
104
352
140
350
106
60
252
62
258
260
284
282
478
474
472
476
456
458
460
464
466
462
256
270
64
470
250
300
344
450
264
266
334
372
376
268
292
322
430
320
340
324
452
442
422
444
440
424
24
410
408
403
454
360
361
420
406
400
402
26
272
216
112
276
22
9
13
INVENTORS
Oliver E. Saari
Henry Pomernacki
BY
Jack R. Halpern
Robert W. Beart
Their Att'ys

Fig. 3

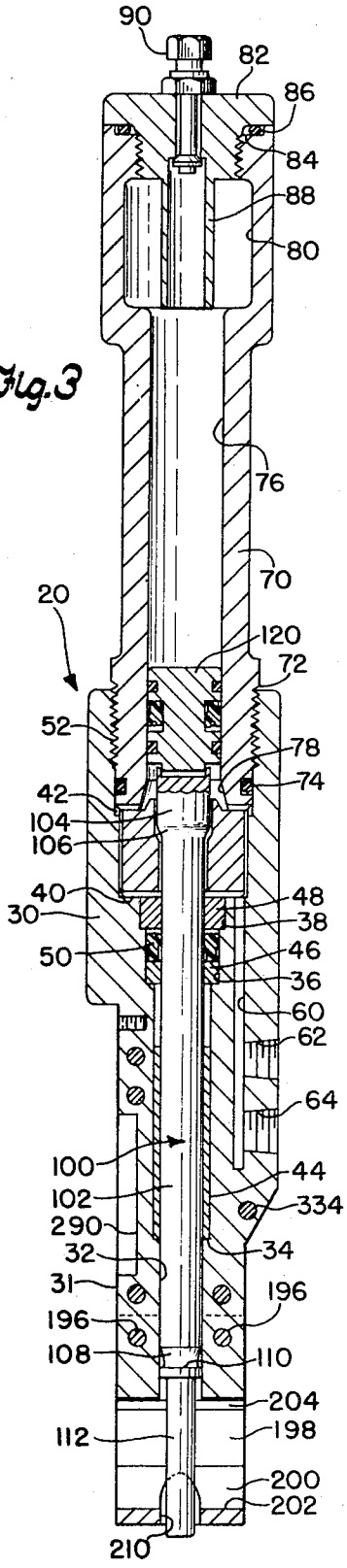

Fig. 4

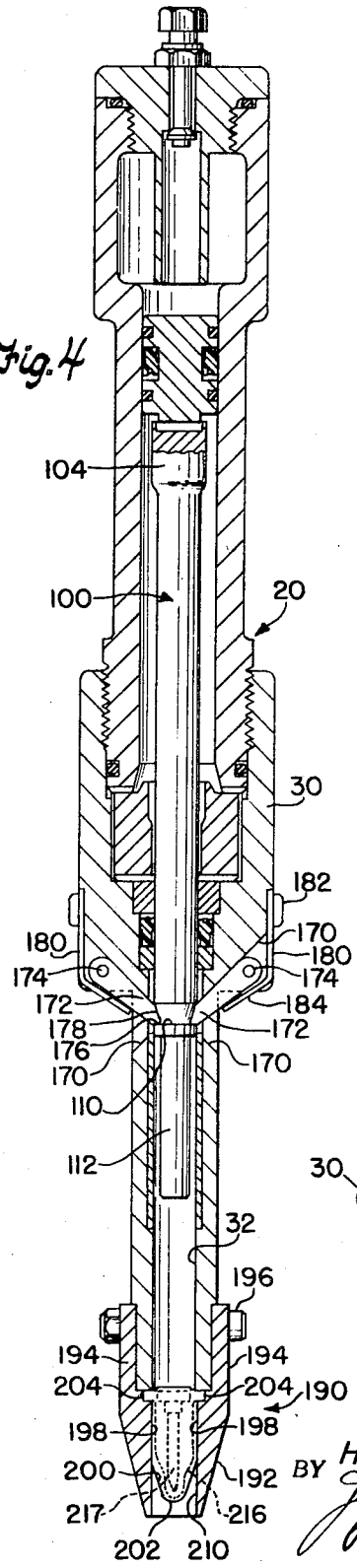

Fig. 12

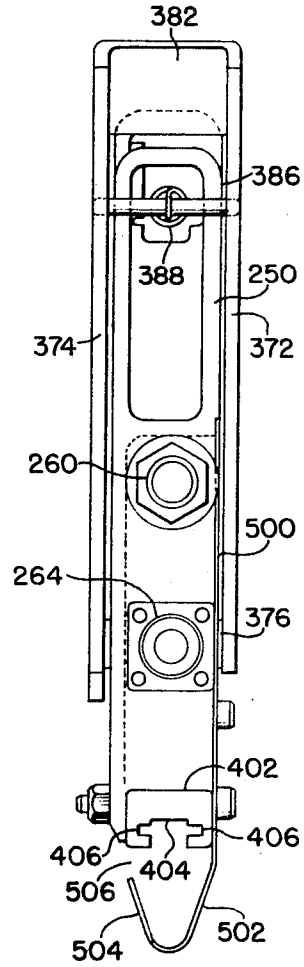

Fig. 11

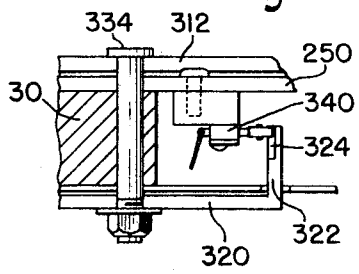

INVENTORS
Oliver E. Saari
Henry Pomernacki
BY Jack R. Halvorsen
Robert W. Kearl
Their Att'ys

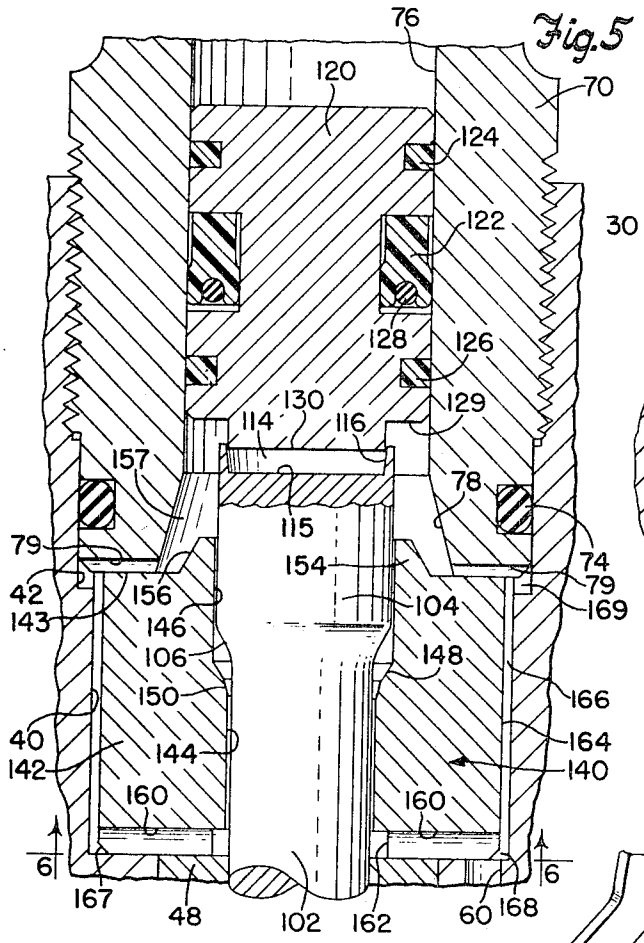

Fig.5

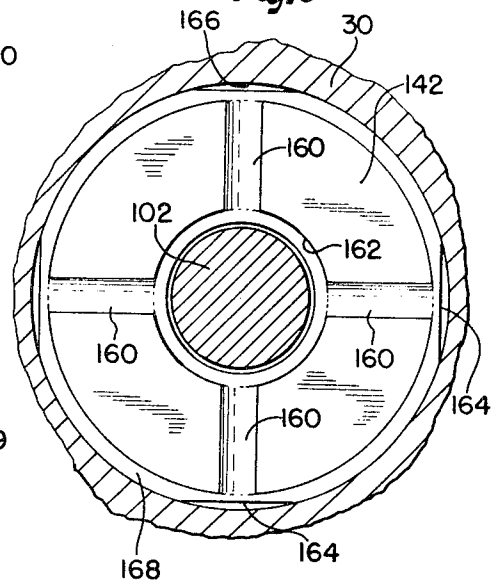

Fig.6

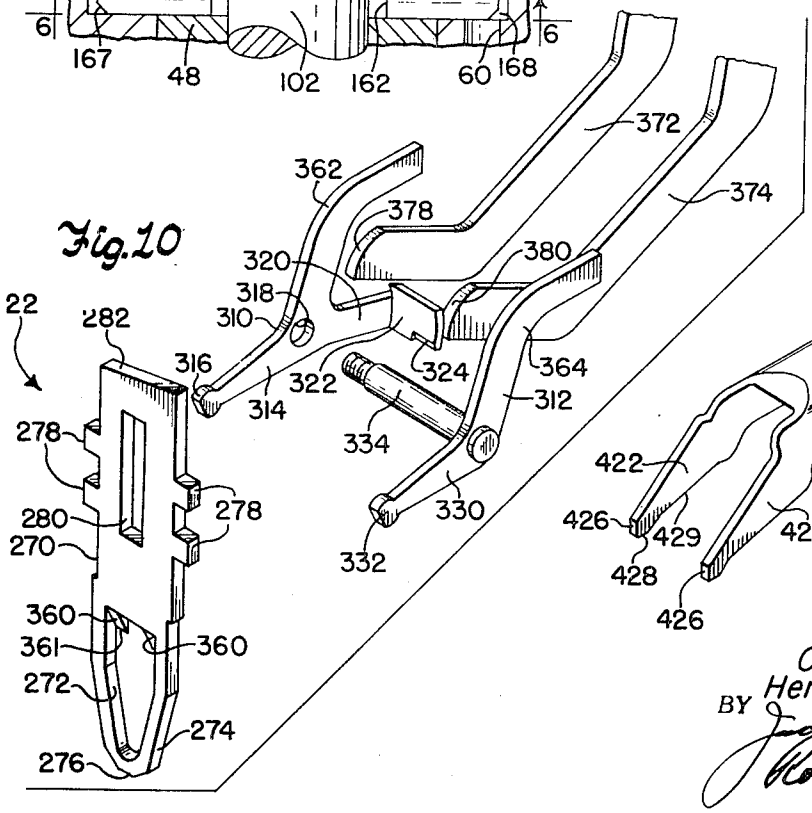

Fig.10

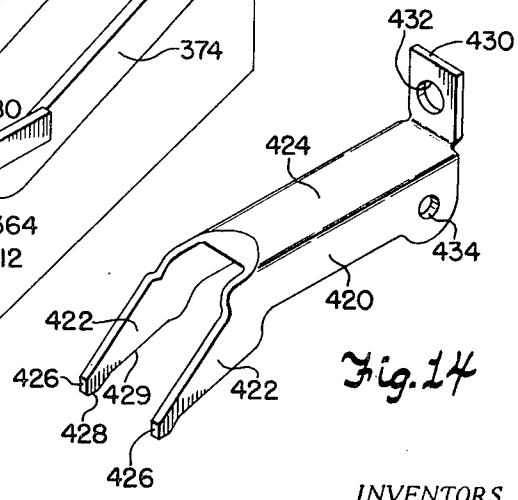

Fig.14

INVENTORS
Oliver E. Saari
Henry Pomernacki
BY Jack R. Halvorsen
Robert W. Beart
Their Att'ys

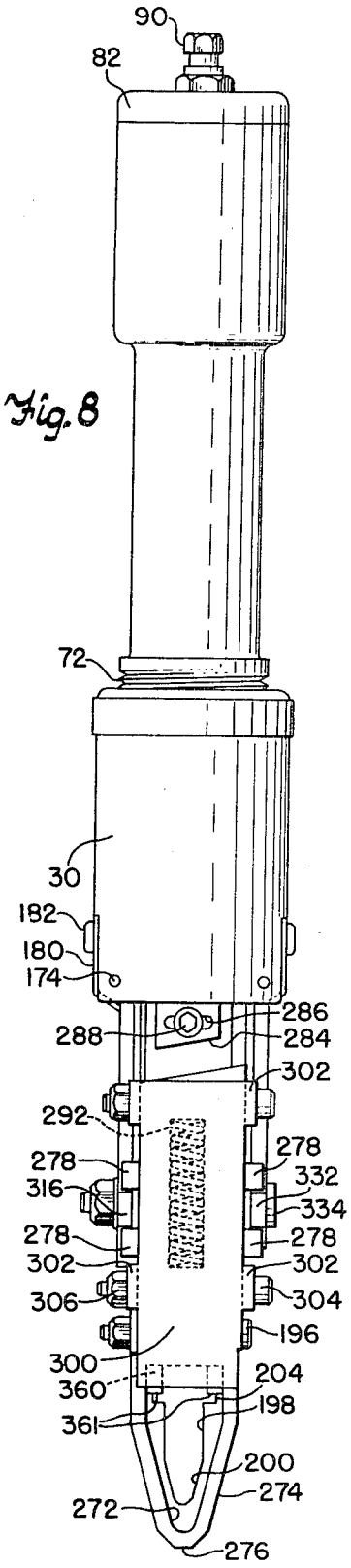

Fig. 8

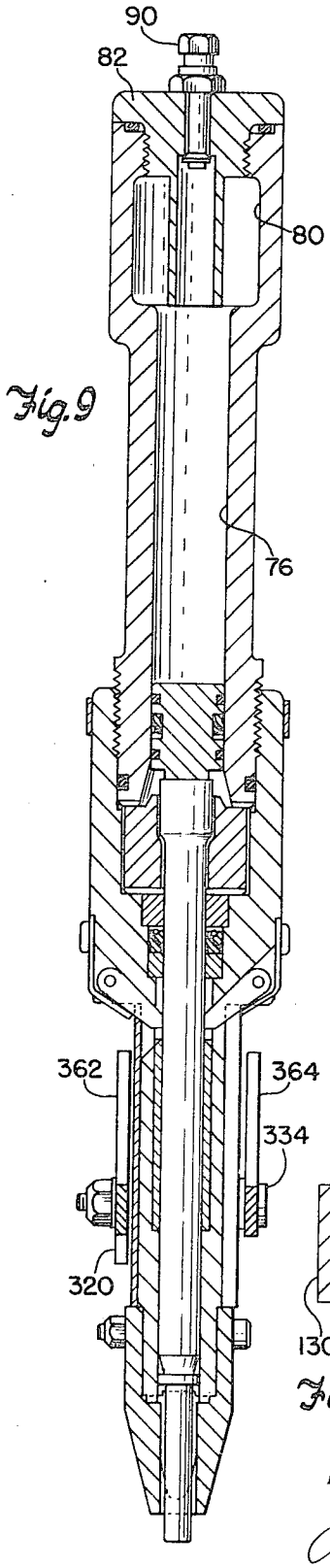

Fig. 9

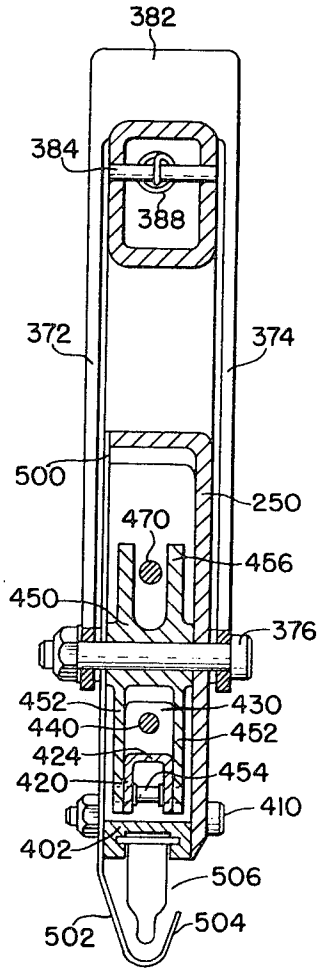

Fig. 13

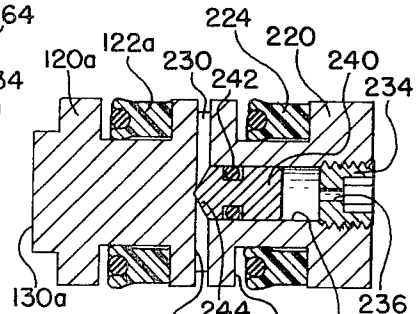

Fig. 7

INVENTORS
Oliver E. Saari
Henry Pomernacki
BY Jack R. Halvorsen
Robert W. Beart
Their Att'ys

POWER DEVICE

BACKGROUND OF THE INVENTION

The patents to Emmett L. Haley, U.S. Pat. Nos. 2,814,041 and 3,150,488, disclose similar devices to the type contemplated by this invention. While the broad concepts of utilizing a compressible gas in a reservoir acting against a free-floating piston, movably sealed to a drive piston which are actuated against the compressible gas by a noncompressible fluid is generally disclosed, there are inherent limitations to the devices shown by Haley in that the devices are not commercially acceptable. The Haley devices are cumbersome, too heavy for prolonged use by an operator and subject to comingling of the noncompressible fluid with the compressible fluid or gas resulting in malfunctioning of the devices as well as having too long a time cycle between operative strokes thereof.

SUMMARY

The present invention contemplates an improved power device for operating handtools which actuates a suitable driving means such as a hammer member and which consistently offers a repeatable operation in short time cycles. The device is an economical power source having a power reservoir in which a compressible fluid, such as a gas, is maintained under high pressure and is employed to impart movement through a noncompressible driving fluid as the linkage means to actuate a suitable driving means.

Additional features of the invention relate to a brake mechanism which cooperates with the drive means for slowing the drive means down and cushioning the shock of the drive means as it reaches its extended position. The invention further relates to improved sealing means within the device to overcome the inherent problems of the Haley mechanism and to an automatic means for limiting the retraction of the drive piston at its cocked position.

Further advantages of the invention will be apparent to those skilled in the art when the specification is read in conjunction with the drawing.

BRIEF DESCRIPTION OF THE DRAWINGS

FIG. 1 is a perspective view of a preferred embodiment of the invention showing it being gripped by an operator;

FIG. 2 is a side elevation in partial section of the preferred embodiment of the invention;

FIG. 3 is a side elevation in partial section of the power unit used by the invention with the power drive piston in extended position;

FIG. 4 is a front elevation in partial section of the power unit shown in FIG. 3 with the power drive piston in retracted position;

FIG. 5 is an enlarged partial section of the accumulator piston, the upper end of the power drive piston, and the brake of the device shown in FIGS. 2–4;

FIG. 6 is a partial bottom end view in section taken along line 6—6 of FIG. 5;

FIG. 7 is a side elevational view of a second embodiment of the accumulator piston;

FIG. 8 is a front elevational view of the device shown in FIG. 1;

FIG. 9 is a front elevational view in partial section similar to the view in FIG. 4 but with the power drive piston in extended position and having the cutoff mechanism mounted on the side thereof, taken along line 9—9 of FIG. 2;

FIG. 10 is an expanded perspective view of the elements of the control and cutoff mechanism;

FIG. 11 is partial sectional view, from the bottom of the invention as viewed in the drawings along line 11—11, showing a portion of the control means of FIG. 10 in operative relationship to the switch means being controlled;

FIG. 12 is an end view of the device shown in FIG. 2 as viewed from the right-hand end of that drawing;

FIG. 13 is a partial sectional view taken along the line 13—13 in FIG. 2; and

FIG. 14 is a perspective of the feeder finger means.

DESCRIPTION OF THE PREFERRED EMBODIMENTS

Referring now to the drawings wherein similar parts are designated by similar numerals, the invention contemplates a new and improved portable power tool with a cylinder body forming a power unit including a reservoir in which a compressible fluid is maintained under pressure. An accumulator piston and a drive piston positioned in said cylinder are simultaneously movable to retracted or cocked positions by the introduction of a noncompressible power fluid into the cylinder in which the pistons are reciprocably movable with the power fluid acting on exposed areas of the drive piston to move it with the accumulator piston until the drive piston reaches its fully cocked position whereupon further movement of the accumulator piston exposes additional areas of the drive piston to pressure of the power fluid. At this point the compressible fluid acting through the accumulator piston upon the power fluid in the cylinder imparts drive movement to the drive piston. The device is fully operable only when it is properly positioned with respect to a workpiece or structure. The tool has means for deactuating a pump used to supply the noncompressible power fluid, before the drive piston reaches its fully cocked position, if the power device is not so properly positioned. The drive piston and the body cylinder include cooperable means for slowing or braking the movement of the drive piston as it approaches its fully extended position to minimize shocks to the body particularly when the power of the drive piston is not utilized for driving an object, such as a fastener, but rather is actuated in free flight. An automatic-recycling feed means is provided which is sequentially operated during each operation of the power device. The feed means generally acts upon a collated strip of devices which are to be sequentially acted upon by the power device. Further, there is provided a cutoff mechanism for eliminating portions of the collating means used for holding the devices to be acted upon by the tool.

Thus, the device generally includes the power device **20** having a combined mechanical-electrical control means **22**, a feed means **24**, and a cutoff mechanism **26**.

POWER SOURCE

The power device **20** includes a stepped body portion **30** having a central pass-through bore **32** of a predetermined diameter. The bore **32** is provided with a plurality of counterbores **34**, **36**, **38**, **40** and **42** which are each progressively larger diameters for ease in assembly of various items coaxially within the bore. Counterbore **34** accepts a metallic sleeve bearing **44** while counterbores **36** and **38** accept bearings **46** and **48** respectively with a sealing member **50** being sandwiched between the two bearings and restrained thereby against axial movement. Radially offset in body **30** from the central bore **32** is an axially extending fluid passageway **60** communicating with the lower extremity of counterbore **40**, as viewed in FIGS. 2 and 3, and having a pair of lateral ports **62** and **64**, for purposes best set forth hereinafter.

A cylinder **70** provided at one end with an external threaded portion **72** is threaded into counterbore **42** with its mating threads **52**. The cylinder **70**, adjacent said one end, has an annular recess adapted to accept an O-ring sealing member **74** for sealing engagement with an unthreaded portion of the sidewall of counterbore **42**. The cylinder **70** has a bore **76** including a taper **78** at its lower extremity, adjacent said one end, and an enlarged cavity at its opposite or upper extremity forming a chamber **80**. The upper end of the chamber **80** is threadedly apertured to accept a mating-threaded cap **82** and further includes a recess **84** for acceptance of an O-ring seal **86** which is compressibly captured between the flange of cap **82** and the end wall portion of chamber **80**. The cap **82** is centrally apertured and provided with a cylindrical extension **88** which is tubular in form and extends into the chamber **80** for a substantial portion of the axial extent of chamber **80**. A valve means **90** is positioned within the bore of the cap **82** and communicates with chamber **80** for purposes best set forth hereinafter.

Positioned within the bore **32** is the power drive piston **100** which includes a preferably cylindrical central portion **102** and enlarged upper end portion **104**, cylindrical in form and connected to the central portion **102** by an upwardly and outwardly tapering portion **106**. At the opposite end of central portion **102**, the drive piston is provided with a groove **108** forming a shoulder **110** which faces towards the enlarged end portion. The balance of the lower end of the drive piston **100**, in the illustrated embodiment, is a generally reduced cylindrical portion or hammer **112** smaller in diameter than the bore **32** and preferably hardened to serve as the hammer or power impacting portion of the drive piston. The bearing members **44, 46,** and **48** are so dimensioned relative to the central portion **102** of the drive piston **100** as to laterally support the device during its axial movement within the bore **32** and into retracted position within cylinder **76**. The seal **50** provides a sliding seal which prevents egress of fluids around piston **100** between bore **32** and cylinder **76**.

The upper end surface of the enlarged end portion **104** of piston **100** is recessed to form an open end chamber **114** having a bottom wall **115** and sidewalls **116** which are frustoconical in configuration and have their widest diameter at the free or open end of the chamber.

Positioned within the cylinder bore **76** is a free-floating accumulator piston **120** having annular recesses intermediate its extremities to accept the seal **122** and lateral circumferentially disposed bearing means **124** and **126**. The seal **122** is preferably a lip seal for sliding engagement with the bore **76** and may be manufactured of urethane. Due to the physical properties of urethane the lip seal **122** is reinforced by a buna-*n* O-ring **128** to provide additional lateral stability to the lip seal **122**. Stability of the accumulator piston **120** within cylinder **76** is enhanced by the bearings **124–126** which preferably are of the self-lubricating variety. They may be fabricated from a lubricous plastic material such as those commonly sold under the trade names of "nylon" or "Teflon." A cylindrical projection **130** extends from the lower end of the accumulator piston **120** and is so dimensioned as to be accepted within the frustoconical wall configuration **116** of the open end chamber **114** located in the enlarged head or end portion **104** of the drive piston **100**. The juncture between the extension **130** and the sidewall **116** intermediate the axial extremities of wall **116** forms an effective seal and yet permits axial separation between the members under specific conditions which will be set forth hereinafter.

Located complimentarily within counterbore **40** and surrounding the drive piston **100** is a brake mechanism **140** which includes a body **142** having a central throughbore **144** with a complimentary shape slightly larger by a few thousandths of an inch than the central portion **102** of piston **100**, this difference in size being overaccentuated in the drawing for clarity of illustration. An enlarged counterbore **146** is joined to the bore **144** by two frustoconical wall portions **148** and **150** each having a different included angle, portion **148** having an angle of approximately 30° measured relative to the axis of bore **144**, while portion **150** has an angle of approximately 15° measured relative to the axis of bore **144**. The counterbore **146** is extended axially beyond the one extremity of body **142** by means of the flange **154** which has an outer frustoconical wall **156**, having an included angle slightly greater than taper **78** to provide an upwardly opening throat **157**, as viewed in FIG. **5**, between the facing surfaces of the two members. The opposite extremity of body **142** as best seen in FIG. **6**, is provided with a plurality of grooves **160** which extend radially from an annular counterbore **162** forming a recess around the drive piston central portion **102** when positioned within bore **144**. The sidewall of the body **142** is provided with a plurality of flats **164** which each form a recess **166** extending axially between the brake body **142** and the counterbore **40** of main body portion **30**. The end of the sidewall adjacent grooves **160** is chamfered as at **167** to form an annular chamber **168** between the brake **140** and the bottom wall of the counterbore **40**, while at the same time, providing communication between the axial chambers **166** formed by the flats **164** and the grooves **160**. The axial extent of brake body **142** is slightly greater than the axial extent of counterbore **40**, whereby the body **142** extends into counterbore **42** forming an annular cavity **169**. The lower extremity of cylinder **70** when screwed in tightly bears against the upper wall **143** of brake body **142**. Cylinder **70** further is provided at its free end with a plurality of grooves **79** which are generally radially extending and communicate with cavity **169**. Thus, free access is provided for fluids introduced through bore **60** to the chamber **168** for passage either through grooves **160** and counterbore **162** thence upwardly between piston **100** and bore **144**, into contact with the undersurface of portion **106** or, from chamber **168** through axial recess **166** into chamber **169** and thence through grooves **79** and throat **157** into contact with the exposed undersurface area **129** of accumulator piston **120**, as will be further discussed hereinafter.

Intermediate the extremities of the body **30**, a pair of oppositely disposed slots **170** communicate between the exterior and the bore **32**. In the preferred embodiment, the body **30** has an enlarged upper section and a reduced lower portion and the slots **170** are generally positioned at the juncture between these two sections. Positioned within slots **170** are a pair of fingers **172** each being rotated at one end on a pin **174** mounted in the enlarged upper section. Each finger **172** has an abrupt shoulder **176** at its opposite extremity. Adjacent to shoulder **176** is a sliding or cam surface **178** adapted to ride on the central portion **102** of the piston **100** and with the abrupt shoulder **176** adapted to cooperate with the shoulder **110** of the drive piston **100**. A leaf spring **180** is fastened by a rivet or screw **182** at one end and at its opposite or free end **184** bears against each of the fingers **172** to serve as a biasing means to urge the fingers **172** into engagement with the piston and its associated shoulder **110**. The fingers **172** effectively control the upper limit of travel of the piston **100** while permitting free movement of the piston to an extended or lower position, as viewed in the drawings. It will be apparent that other means such as spring-loaded balls or plungers that can be hydraulically or spring-actuated will operate effectively as a stop means.

At the free end of the body **30** adjacent bore **32**, there is provided a nosepiece **190**, having a tapered lower portion **192** adapted to permit entry of the tool into confined spaces. The upper portion of nosepiece **190** is defined by a pair of flanges **194** which are apertured for acceptance of a pair of bolts **196** for fastening of the nosepiece in embracing relation to the body **30**. The interior of the nosepiece is further defined by a fore-and-aft passageway having a pair of opposed vertical sidewalls **198** and lower inwardly tapering portions **200** which meet in a radiused section **202** on the vertical axis of the nosepiece. At the upper end of the passageway defined by walls **198** a track means is positioned and defined by oppositely extending grooves **204**, while centrally of the nosepiece **190** there is located a vertical bore **210** which traverses the fore-and-aft passageway. This particular nosepiece was designed to accept a collated strip **216** of fasteners **217** shown in phantom in which the collating means **216** includes individual plastic elements or holders having laterally extending head means adapted to ride in track **204** and a body portion adapted to position a fastener **217** held by the collating means in coaxial position with the drive piston within the bore **210**. The bore **210** has a dimension sufficiently large to accept the hammer portion **112** of the drive piston **100** plus the material thickness of the collating means.

In the operation of this power source several physical relationships must be kept in mind. The area of the face or surface **115** of the piston head, defined by the frustoconical wall **116**, is greater than the cross-sectional area of the drive piston **100** at the seal **50** so that when the sidewall **116** seals between the projection **130** on the accumulator piston and the drive pistonhead, any fluid pressure which is exerted on the drive piston tends to move the pistonhead toward the accumulator piston and hold it in tight engagement therewith. Accordingly,

fluid pressure introduced through port **62** into the bore **60** of the body and thence through the chamber **168**, grooves **160** and bore **144**, when the accumulator piston and the drive piston are in the position illustrated in FIGS. **2**, **3**, **5** and **9**, will tend to force the drive pistonhead into engagement with the accumulator piston **120** and tend to move the drive piston **100** upwardly as seen in these FIGURES.

Compressed gas is introduced into the power accumulator or compressed gas chamber **80** through valve **90**. It will be apparent that when the chamber **80** is charged with a gas under pressure, the accumulator piston **100** will be forced downwardly, as seen in FIG. **3**, to tend to hold the drive piston in the position illustrated in FIG. **3**, and with the projection **130** moved into sealing relationship with the frustoconical sidewall **116**. The compressed gas charge that is introduced through valve **90** normally has a pressure of approximately 2,000 p.s.i. A suitable gas for use in a device of this type is nitrogen, although other forms of nonexplosive, compressible gases can be used with equal facility.

To cause the operation of the power source to perform some work, such as the driving of a nail, a noncompressible fluid is introduced from a reservoir by a pump, neither of which are shown, but which are well known in the art, through the port **62** into the bore **60** and thence through the various passageways into the clearance between bore **144** in the central body portion **102** of the drive piston **100**, into engagement with the undersurface **106** of the head **104** of the drive piston. As the power fluid is pumped into the main bore, it causes the accumulator piston **120** and the drive piston **100** to be moved upwardly as seen in FIG. **3**. The drive piston is caused to move upwardly with the accumulator piston since, as was explained above, the area of the surface **115**, as well as the area of the tapered portion **106** of head **104** is greater than the cross-sectional area of the piston **100** at the seal **50** so that the fluid pressure acting on the drive piston tends to force the drive piston toward the accumulator piston. Continued introduction of the power fluid to the bore forces the accumulator piston **120** and the drive piston **100** to move upwardly toward the fully retracted positions thereof illustrated in FIG. **4** against the force exerted by the compressed gas in the power accumulator or chamber **80**. The drive piston and the accumulator move upwardly until the fingers **172** bring their associated shoulders **176** into engagement with the shoulder **110** on the drive piston **100**. At this time, the drive piston is in its fully retracted or cocked position. The accumulator piston, however, is free to continue such movement as the pumping of the power fluid continues. Such separation, as seen in FIG. **4**, separates the seal between the projection **130** and the sidewalls **116**. Once this seal is broken, the pressure of the power fluid is now exerted across the whole cross-sectional area of the face **115** of the drive piston head **104** and as a result, the drive piston is now moved forcibly and with great velocity downwardly due to the force exerted by the compressed gas of the power fluid in the main bore of the cylinder **76**. Since the power fluid is noncompressible, it serves as a linkage or transfer means for the force being exerted by the compressed gas through the power fluid against the head **104** of the drive piston **100**. The accumulator moves behind and follows the drive piston but since it extends across the full cross-sectional area of the bore of the cylinder, it moves at a slower speed than the drive piston. Such rapid movement of the drive piston, of course, drives the nail or other fastener into the workpiece or structure.

The frustoconical portion **106** at the undersurface of head **104**, is disposed at an angle of approximately 30° to the vertical axis of the piston **100**. This frustoconical shape of the head **104**, causes the head to tend to trap power fluid in the reduced annular shape of bore **146** and thence against the double frustoconical counterbore **148–150**. Additionally, as the head progresses down the cylinder **76**, the power fluid tends to be forced outwardly through the throat **157** and the associated passageways communicating therewith. As a result, the entrapment of the power fluid between frustoconical face **106** and the reduced bore **146** and its associated counterbores **148–150**, slows down the drive piston as it approaches the end of its power stroke and cushions the shock of the engagement between the head **104** and the brake **140**. The accumulator piston **120** is now spaced from the drive pistonhead due to the presence of the additional power fluid which has been pumped into the cylinder **76**. The pump, of course, may continue to pump during the working or driving stroke of the drive piston, but the movement of the drive piston is primarily due to the force exerted by the compressed gas in the chamber **80** which is transmitted through the accumulator piston to the power fluid, acting as a linkage, against the surface **115**.

The power fluid in front of the accumulator piston is now forced by the pressure of the compressed gas in the chamber **80** and the cylinder **76**, to move backwardly through the various passages into the bore **60** and out the port **62** into the reservoir, not shown. As a result, the accumulator piston moves downwardly until its extension **130** once again engages the wall **116** of the drive pistonhead and again provides a seal between the head **104** and the accumulator piston **120**. The power source is then again in condition for another cycle of operation.

It will now be apparent that the power source illustrated and described performs work due to the expansion of the compressed gas in the power accumulator or gas chamber **80** and cylinder **76**. The pressure of the gas introduced into the gas chamber **80** may be initially of a relatively large value, say 2,000 per square inch, and with the further compression of the gas in the chamber **80**, due to the movement of the accumulator piston **120** in the cylinder **76** by the noncompressible power fluid, causes it to attain a pressure of a still higher value, say 4,000 pounds per square inch, while the power fluid will reach 6,000 p.s.i. at the time of separation between the power piston and the accumulator piston. Thus, the energy stored in the compressed gas is employed to drive the piston, using the power fluid as a linkage between the accumulator piston and the drive piston, and thus perform such functions as the driving of a fastener into a workpiece. Normally, the volume of the drive piston in its axial movement of approximately 4 inches is equal to the volume of the accumulator piston in its movement of 1 to 1½ inches during the power stroke. The power fluid is virtually noncompressible and has approximately the same displacement. It should be noted that the extension **88** of the cap **82** serves as a safety device to prevent movement of the accumulator piston **120** out of the cylinder bore **76** into the power accumulator or gas chamber **80**. Thus, the piston **120** is maintained in its oriented position within the cylinder **76**, as well as preventing overcompression of the gas within the chamber **80** by providing a stop to the axial movement of the piston **120** after separation from piston **100** when it contacts the lower extremity of the tube **88**.

It has been found occasionally that the seal **122** under the pressures developed, permits passage of the power fluid into cylinder **76** and comingles it with the compressed gas. Due to the heat generated in the compression of the gas, the power fluid is atomized and can produce an undesirable condition. To this end, a second embodiment of the accumulator piston is shown in FIG. **7**, wherein similar parts are designated by similar numerals with the addition of the suffix *a*. This embodiment includes virtually a one-piece double piston, including portion **120*a*** having a single seal **122*a***, and the forward projection **130*a*** adapted to seal with the cavity in the end of head **104** in the same fashion as the first embodiment. This embodiment includes an extension **220** provided with a circumferential cavity **222** for acceptance of a second seal **224**. At the juncture between extension **220** and the basic portion **120*a***, there is provided a plurality of transverse passageways **230** which communicate between the periphery of the piston and a central bore **232** which opens through the opposite end of extension **220**. The open end of bore **232** is closed by a threaded plug **234** having a central pass-through bore **236** providing limited ingress and egress to the bore **232**. Positioned within bore **232** is a free floating piston **240** having an

annular groove adapted to accept an O-ring seal **242**. The free end **244** of piston **240** is conically shaped and adapted to intersect and close the passageways **230** communicating with the periphery of the embodiment. In the operation of this device in the environment previously described, it will be appreciated that the compressed gases from chamber **80** will pass through the bore **236** and act upon the end of the piston **240** to maintain it in the seated position shown in FIG. **7**. In the event that the power fluid should bypass seal **122a**, it will seek the passageway **230** and act against the relatively small diameter piston **240** to move the piston to the right, as viewed in FIG. **7**, against the compressed gas and to form a reservoir within the bore **232**. The relative cross-sectional areas of piston **240** and seal **224**, are such that the piston will be acted upon more readily by the power fluid than the seal and thus the power fluid will be prevented from passing into the cylinder **76** and chamber **80** to comingle and atomize with the compressed gas.

The power source previously described is fitted in the illustrated embodiment to a body shell **250** having a central aperture **252** defining a handgrip portion **254**. A rear aperture **256** is adapted to accept appropriate fittings **256** for the acceptance and mounting of tubular means **260** carrying the power fluid from its reservoir and supply pump, not shown, to the port **62**. Also positioned in casing **250** at its rear or right-hand end, as viewed in FIG. **2**, are terminal means **264** for providing electrical access to the control cable **266** on the exterior and internal wiring **268** on the interior of the casing for control of the external pump and its supply of power fluid to the power source. Other details of the casings in body **250** will be described hereinafter with reference to the specific features being described.

CONTROL MEANS

In the operation of the power source, it is necessary to provide mechanical detection means which will insure that the tool is in the proper position for operation prior to the power stroke by the piston. Additionally, control means are provided which are interconnected electrically with the mechanical detection means for the purposes of remotely controlling the pump and reservoir which are located at a distance from the power tool. Further, means must be provided for controlling the position of the extreme end of the hammer portion **112** relative to the workpiece since the extended position of the hammer extremity is a definite physical relationship relative to the lower end of the nosepiece upon the completion of the power stroke and the extension of the power piston **100** internally of the body.

As best seen in FIGS. **1**, **2**, **3**, **8** and **10**, there is provided a flat front face **31** on the lower portion of body **30**, adapted to accept a detector blade **270** in sliding superposed relationship thereto. Detector blade **270** is basically a rigid, flat structure having a lower cutout portion **272** at one end which is greater than and generally complimentary in cross-sectional configuration to the passage through the nosepiece defined by walls **198** and **200**. The exterior edge surface at said one end of plate **270** forms a nose or reduced section **274** generally complimentary to the sloping wall **192** of the nosepiece and terminating in a flat surface **276** at its free extremity for contact with the work surface. A pair of lugs or dogs **278** extend laterally from opposite side edges of the blade **270** intermediate their extremities. An aperture **280**, generally rectangular in shape, is positioned centrally and intermediate the extremities of the blade. The opposite or upper end **282**, as best seen in FIG. **10**, presents a cammed or sloped surface which is nonperpendicular to the side edges of the blade. End **282** is adapted to cooperate with movable plate **284**, as best seen in FIG. **8**, having an elongated transverse aperture **286** and a retaining screw **288** affixed to the front face **31**. Lateral adjustment of plate **284** will, in cooperation with surface **282**, determine the extent of movement of the detector blade **270** in an upward direction, as viewed in the drawing, along the front face **31**. An elongated cavity **290** is provided in face **31** and adapted to accept a spring member **292** having a diameter substantially equal to the combined measurement of the thickness of the blade **270** and the depth of the cavity **290**. After spring **292** is positioned within the cavity **290**, the blade **270** is positioned with the spring member located within the aperture **280**. A flat cover plate **300** is positioned over the blade **270** and the assembly maintained in place by lateral flanges **302** extending rearwardly from plate **300** and secured to the body **30** by suitable means such as a screw **304** and nut **306**. The cover plate **300** maintains the blade **270** in free-sliding relationship to the front face **31** with the spring **292** centering the blade **270** when forces tending to move the blade in either direction have been removed. The lower extremity of blade **270** defined by surface **276** normally extends beyond the free extremity of nosepiece **190** before contact with a workpiece.

The effects of movement of the detector blade upwardly against spring **292** when contacting a workpiece are translated into usable impulses by means of a pair of levers **310** and **312** mounted on opposite sides of body **250**. The lever **310** has a forward portion **314** terminating in a cammed bulbous tip **316** adapted to be accepted between the adjacent side lugs **278**. Lever **310** is provided with a central pivot-point aperture **318** and a rearwardly extending arm **320** terminating in a laterally extending flange **322** having a cammed surface **324** adjacent its lower edge, as viewed in FIGS. **2** and **10**. Lever **312** is provided with a forward portion **330** and a similar bulbous tip **332** for acceptance between the lugs **278** on the adjacent side of **270**. Intermediate the extremity of lever **312**, there is positioned a stud **334** at its pivot point and adapted to be accepted within the pivot-point aperture **318** of the lever **310**.

Within the case **250** there are positioned two switches **340** and **342**. Switch **340** is provided with a spring pivot arm **344** adapted to be in contact with the cam **324** of lever **310**. In the upper portion of casing **250**, there is provided in the handgrip aperture **252** a trigger switch lever **350** pivoted at **352** and having an upwardly extending lever **354**. The switch trigger **350** is adapted to act against adjustable spring **356** when an upward pressure is brought to bear on trigger **350**, as viewed in FIG. **2**, to swing flange **354** into contact with switch **342**. Switches **340** and **342** are connected in series internally of the casing by appropriate means with the cable **268**. When the trigger **350** is squeezed, switch **342** is closed, but the circuit will not be complete unless the detector blade **270** is moved upwardly, as viewed in FIG. **2**, so as to pivot lever **310** and move the cam surface **324** downwardly to actuate switch **340** and thereby close the series circuit. If pressure against the nose **276** of blade **270** is removed, as by removal of the tool from the work surface, the circuitry will be opened and electrical power to the pump which supplies the power fluid will be cut off and the power stroke will be unable to proceed in its cycle. Thus, the tool must be in a predetermined position for driving, as well as having the trigger **350** depressed in order to carry out its sequence of firing.

CUTOFF MECHANISM

The collated strip **216** with which the tool is adapted to operate includes a plurality of fasteners **217** which are maintained in a predetermined spaced relation by the supporting strip. The proposed strip, which has been indicated will be disclosed in a copending application, envisages a series of plastic carrying means for orientation of the fasteners with the head portions of the carrying means being interconnected. After a series of fasteners have been fired, the carrying means or strip, will be ejected forwardly through the aperture **272**. At times, when spacing of the environment are tight, it is necessary to dispose of the strip and hence a cutoff mechanism has been provided. The detector blade **270** is provided on opposite upper sides of the aperture **272** with a pair of depending knives **360** having knife edges **361**. The back surface of each knife **360** is coplanar with the surface of blade **270** riding on the front surface **31** while the front surface of each knife **360**

is tapered to intersect said back surface and provide the cutting edge 361. The detector blade levers 310 and 312 include upper extensions 362 and 364 respectively which extend upwardly and rearwardly from the pivots 318 and 334. For operation of this device, a manual lever 370 is mounted on body 250 and provided with a pair of arms 372, 374 pivoted centrally thereof at 376 and having cammed surfaces 378 and 380 at their respective far extremities. The lever 370 is provided with a yoke connecting portion 382 at its upper extremity forming a handle for manual engagement by the operator. A pin 384 is positioned internally of the handle 254 of casing 250 and a similar pin 386 extends between arms 372 and 374, intermediate the extremities of lever 370. A tension spring 388 extends between the pins 384 and 386 and maintains the lever 370 and its associated cam surfaces 378 and 380 out of contact with the upper portions 362 and 364 of detector blade levers 310 and 312 with pin 386 serving as the stop means which by engaging with case 250 serves as the lever orientation means. Depressing lever 270 by application of a force to the handle 382, pivots the lever 370 about point 376 to bring the cam surfaces 378–380 into engagement with the undersurface of the upper portions 362 and 364 of the lever arms 310 and 312. The bulbous connections 316 and 332 at the opposite end of the lever arms then act then act on the lugs 278 to move the detector blade downwardly against spring 292, as viewed in FIGS. 2 and 8, to bring the knife edges 361 into engagement with the collated strip of the type shown in phantom shown in FIG. 2, to sever the used portions of the strip extending outwardly through the aperture 272. Release of pressure on handle 382 permits the spring 388 to move the lever 370 back to its position of rest, and spring 292 to return the blade 270 to its normal position of rest.

FEED MECHANISM

As has been previously discussed, the collating means 216 for the fasteners adapted to be used with this embodiment of power tool includes plastic members which are joined at their head and have laterally extending flange means and body means depending from said heads. At the base of the body shell 250, there is provided a guide rail means 400, see FIGS. 2, 12 and 13, which includes a grooved casting 402 having a downwardly opening slot 404 extending the longitudinal length of the casting 402. The slot 404 includes lateral grooves 406 which are aligned with and complimentary to the grooves 204 in the nosepiece. Suitable flange means 408 are provided to accept fasteners 410 for mounting the casting relative to the body 250. The collated strip 216 is inserted from the back end of the slot 404, opposite nosepiece 190, the heads of the strip riding in the grooves 406 and the body portions depending downwardly, as shown in phantom in FIG. 2.

The feed mechanism includes advancing means for sequentially advancing individual fasteners into position under the hammer 112. Referring to FIGS. 2, 13 and 14, the advancing means include fingers means 420 consisting of a pair of narrow sheet metal members 422 interconnected by a flange 424. An abrupt shoulder 426 is formed at the free end of each of the members 422, while the undersurface thereof includes a double tapered cam surface designated at 428 and 429. At the opposite extremity of the finger means 420 and connected to flange 424, is an upstanding apertured flange 430 having a central aperture 432. Each of the finger means 420 include oppositely disposed apertures 434 which are in registry with one another and are positioned adjacent the end-carrying flange 430.

A rod 440 is mounted at one end 442, in the casing 250 by suitable means, such as screw threads or welding, and extends cantilever fashion into the interior of the case 250. Rod 440 has mounted thereon a compression spring 444. The spring 440 normally occupies substantially the entire length of rod 440. The aperture 432 of flange 430 of the finger means 420 is positioned on the free extremity of rod 440 and moved to the right, as viewed in FIG. 2, to compress the spring 444. It will be noted that the casting 402 at the end 403 adjacent its juncture with the nosepiece 190, is milled away to expose the groove 406 to the ends 426 of the finger means 420. The finger means 420 is pivoted about its aperture 434 and normally spring-urged downwardly to the left by the weight of the finger means and the spring 444.

A double-yoke member 450 is pivoted on pin 376 and provides a pair of arm members 452 extending downwardly and embracing the finger means 420. A pivot pin 454 connects the pivot aperture 434 of the finger means and suitable aperture means in the yoke arms 452. It should be noted that the aperture 432 in the finger means, is slightly larger in diameter than the rod 440 so that movement of the yoke arms 452 in a direction to the left in FIG. 2 will always permit the finger means 420 to depend downwardly into the groove 406 of the track 400 and the groove 204 in the nosepiece 190. It should be noted that the spring 444 has a predetermined strength for urging the finger means 420 in the direction to the left toward the nosepiece. To control the advancing means, the yoke has a second pair of arms 456 extending upwardly opposite the arms 452. The arms 456 have a cam surface 458 on their rear edge abutting the spring-urged stop means 460 which has a strength substantially from four to six times greater than that of power spring 444. The stop means 460 includes a cavity 462 in the body 250, a spring 464 and a caplike plunger 466 which is freely slidable within cavity 462 and in encompassing relation to spring 464. Plunger 466 acting against the cam surfaces 458 of the yoke 450, tends to urge the finger means 420 in the direction to the right since spring 464 is many times stronger than the power spring 444 and thereby overcomes the force of spring 444.

To overcome the stop 460 a piston 470 is provided in opposition to the plunger 466. A cylinder 472 is threadedly mounted in the port 64 and access provided to the bore 60 carrying the power fluid. Suitable seal means 474 is provided within the cylinder 472 acting against a stop 476. The piston 470 is so dimensioned that it abuts plunger 466 with one end at all times and in the retracted position, shown in FIG. 2, is seated on a shoulder 478 at its end opposite the plunger 466, thereby controlling the relative movement of plunger 466 in an outward or direction to the left.

The operation of the feed means is as follows: When the trigger 350 is squeezed, detector blade 270 is moved to actuate switch 340, power fluid is introduced through the tube 260 into bore 60. Power fluid then flows from port 64 into the cylinder 472 and movement of the piston 470 overrides the spring 464 by moving it to the right, as viewed in FIG. 2. By removal of stop means 460 the power spring 444 is permitted to act upon the flange 430 and attempt to move the finger means 420 to the left. The power piston 100 in its lower or extended position provides a stop means against which the end of the collated strip can come to rest or, as is shown in FIG. 2 in phantom, the hammer portion 112 projects through the interior of one portion of the coated strip and prevents movement thereof until, during the power cycle, the power piston 100 is retracted. When the hammer 112 in its upward movement clears the collated strip, the abrupt shoulder 126 engages a complementary shoulder in the strip and moves it forward with a rocking of the yoke 450 as shown in phantom. The collated strip has a series of notchlike grooves for acceptance of the shoulder means 426 of the finger 420 and the stroke of the finger means is controlled by the movement of the yoke 450 until it touches the plunger 466 in retracted position. This is a calculated position to insure proper positioning of the collated strip beneath the power piston. When the cycle is complete, the fastener is driven through the collated holder into the work structure and the power fluid is then evacuated through the tube 260. This permits the piston 470 to return to its seated position against shoulder 478 and the spring 464, being much stronger than spring 444, swivels the yoke 450 to the solid-line position shown in FIG. 2, thereby retracting the finger means with the cam surfaces 428–430 riding across the upper surface of the collated strip 216 until the shoulder

means 426 engage the next notch in the strip. The feeding means is then ready for recycling.

It will be noted in FIG. 13 that the body shell 250 is open on the left side and bottom to provide access to the interior. A thin sheet metal cover 500 is used to cover the interior of the body shell 250. Cover 500 has at one extremity, an inwardly and thence upwardly directed bottom or nose portion 502 which protects the strip of collated fasteners from damage as they are moved along the grooves 406. The upwardly turned portion 504 terminates in spaced relation to the rail casing 402 to provide a slot 506 which permits the operator to move independent or short sections of collated fasteners along the guide rail. It will be recognized, of course, that power means such as a spring, could be used for this purpose, but it has been found unnecessary when access is so readily available through the slot 506.

Thus, it will be apparent to those skilled in the art, that an economical, high velocity, high force, power source is combined with a simple, fail-safe positive positioning of a collated strip of fasteners for driving into a work structure. The safety features, such as a detector blade when mechanically moved, provides a circuit-actuating means for remotely controlling the reservoir and pump used for introducing the power fluid into the power device.

What is claimed is:

1. A power device including: a body having a bore; a drive piston reciprocably movable in said bore, said piston having one end portion extendable outwardly of said bore, said body having means providing a cylinder, said drive piston having an end portion opposite said one end portion extending into said cylinder; an accumulator piston reciprocably movable in said cylinder; means biasing said accumulator piston toward said drive piston and into engagement therewith; means for introducing a noncompressible power fluid into said cylinder for moving said drive piston and said accumulator piston toward retracted positions against the force exerted by said biasing means, said accumulator piston shielding a predetermined area of said drive piston from the force of the pressure of said power fluid when said accumulator piston is in engagement therewith, said drive piston having a smaller total area thereof exposed to said power fluid than said accumulator piston, brake means encircling said drive piston and adapted to cushion said drive piston when said biasing means forces the drive piston to its extended position, seal means cooperatively engaging when said accumulator piston engages said drive piston, passage means for introducing said power fluid through said brake means into contact with said drive piston and accumulator piston and coengageable resilient stop means on said body and said drive piston for limiting movement of said drive piston to the retracted position.

2. A device of the type claimed in claim 1 wherein said drive piston includes an enlarged portion defining the end portion extending into said cylinder, said brake means presenting a recessed counterbore complementary to and encircling a substantial portion of said enlarged portion of said drive piston, said recess being coaxial with a bore in said brake means adapted to accept said drive piston in complementary telescoping relationship.

3. A device of the type claimed in claim 2 wherein said brake means is an annular member positioned within said body between said bore and said cylinder, said brake means having a pass through bore complementary to said drive piston with said pass-through bore being slightly larger than said drive piston through a substantial portion of the length of said drive piston except for said enlarged portion whereby said power fluid can be introduced through said pass through bore into said recess to act upon the enlarged portion of said drive piston, means provided for passage of said power fluid to a position in which it is capable of engaging the accumulator piston.

4. A device of the type claimed in claim 2 wherein said body is recessed between said bore and said cylinder to accept said brake means, said brake means including an annular bushing having a central pass-through bore adapted to complementarily telescopically accept a substantial portion of said drive piston, said enlarged end portion of said drive piston being substantially cylindrical and having a predetermined axial dimension and connected to the balance of the drive piston by a frustoconical and radiused section, said recess in said brake having a cylindrical wall slightly larger than the cylindrical portion of said enlarged end portion and having an axial dimension less than said predetermined enlarged end portion dimension, the base of said recess being tapered complementary to the connecting section of said enlarged end portion, said base communicating with the pass-through bore in said brake means, passage means located between said brake and said body portion to permit flow of said power fluid through said pass-through bore between said drive piston and said brake into engagement with the enlarged end portion, lateral passage means extending axially between said brake and said body means to permit passage of said power fluid into said cylinder for application of forces against said accumulator piston to thereby simultaneously move said drive piston and said accumulator piston against said biasing force.

5. A device of the type claimed in claim 4 wherein the passage means are defined by a plurality of radially extending grooves in the base of said brake means and said lateral passage means are defined by the removal of segments of the annular sidewall of said brake means.

6. A device of the type claimed in claim 5 wherein said brake means is further defined by an axially extending flange coaxial with said recess having an inner wall identifying the same circle as the balance of the brake wall complementary to said enlarged end portion, said axially extending flange being defined on its outer surface by a frustoconical configuration, said cylinder having a frustoconical configuration laterally spaced from said axially extending flange and said body means adjacent said frustoconical section having passage means communicating with the lateral passage means of said brake means whereby said power fluid is vectorially directed against said accumulator piston and the adjacent axial portion of the enlarged end portion contacted by said accumulator piston.

7. A device of the type claimed in claim 2 wherein said enlarged end portion of said drive piston is provided with a recess defined by an upstanding sidewall, said accumulator piston at its end adjacent said drive piston being provided with a complementary protuberance adapted to partially fill the recess in said enlarged end portion of the drive piston.

8. A device of the type claimed in claim 7 wherein said upstanding wall portion is defined on its inner diameter by a frustoconical configuration while said accumulator piston protuberance means on its outer peripheral surface defines a configuration adapted to sealingly engage said inner diameter.

9. A device of the type claimed in claim 2 wherein said drive piston intermediate its extremity is provided with a groove defining a shoulder facing towards said enlarged end portion, said resilient stop means including spring urged means adapted to engage said drive piston during its movement from extended to retracted positions and to engage said shoulder means to prevent further movement of said drive piston in the direction of the retracted position.

10. A device of the type claimed in claim 9 wherein said resilient stop means includes one or more hinged spring-loaded fingers.

11. A device of the type claimed in claim 10 wherein said spring-loaded fingers are two in number disposed on opposite sides of the axis of said drive piston, said fingers having complementarily shaped end portions for cooperation with said shoulder means on said drive piston and being urged into engagement by leaf spring members.

12. A device of the type claimed in claim 10 wherein said resilient stop means include shoulder detent means spring-urged into engagement with said shoulder.

* * * * *