Sept. 29, 1964 E. L. HALEY 3,150,488

POWER DEVICES

Filed Nov. 22, 1961 2 Sheets-Sheet 1

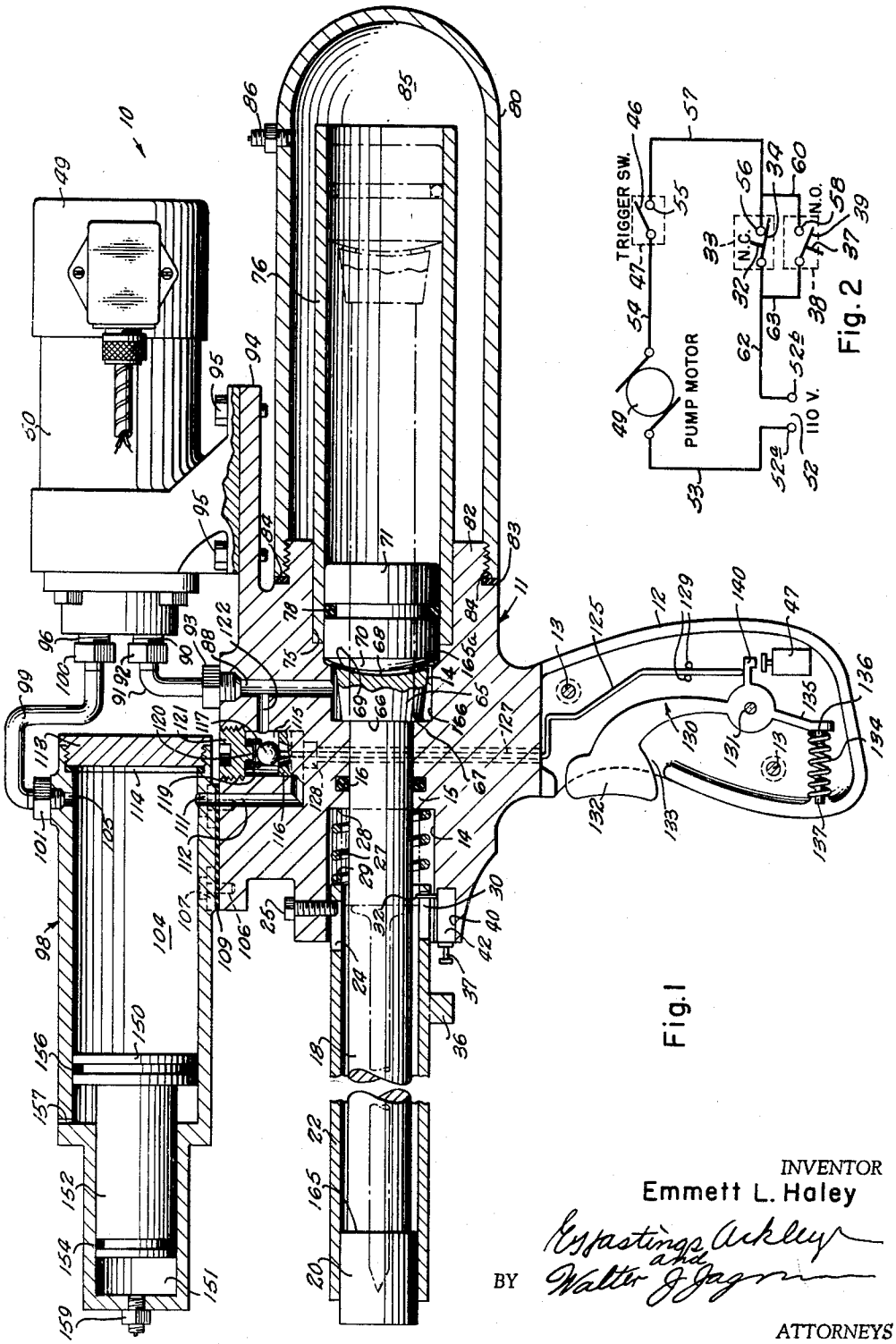

Fig. 2

Fig. 1

INVENTOR
Emmett L. Haley

BY Hastings Ackley and Walter J. Jagr

ATTORNEYS

Sept. 29, 1964 E. L. HALEY 3,150,488

POWER DEVICES

Filed Nov. 22, 1961 2 Sheets-Sheet 2

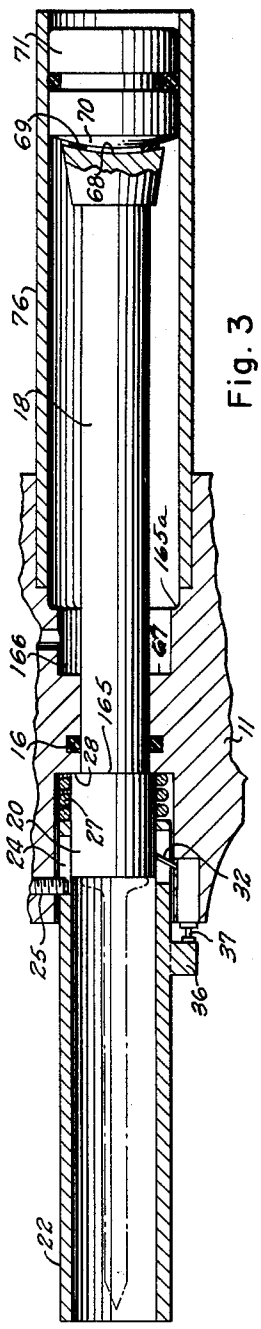

Fig. 3

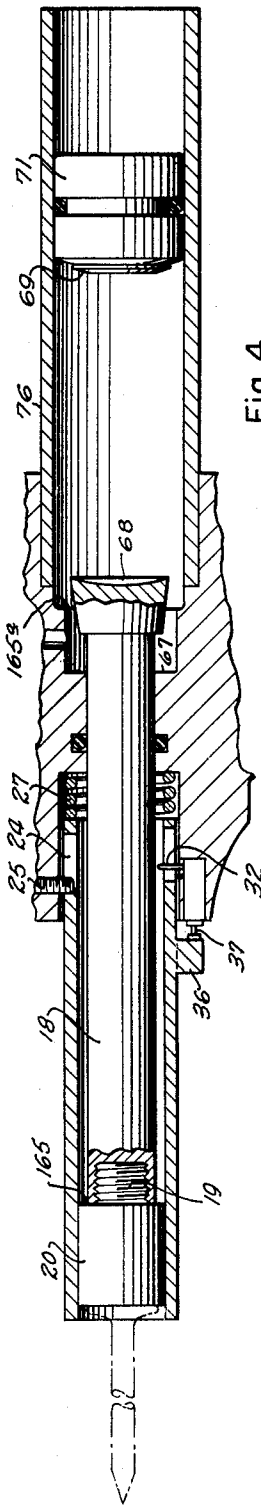

Fig. 4

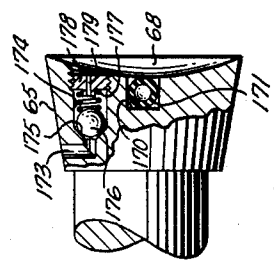

Fig. 6

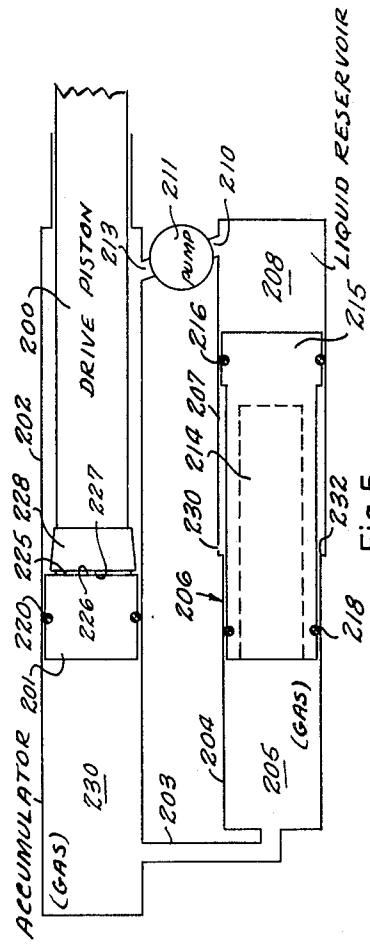

Fig. 5

INVENTOR
Emmett L. Haley

BY Kyjastings Ackley and Walter J. Jagm

ATTORNEYS

Koki Holdings America Ltd.
Ex. 1004, p. 2

United States Patent Office

3,150,488

Patented Sept. 29, 1964

1

3,150,488

POWER DEVICES

Emmett L. Haley, 3942 Davila St., Dallas, Tex.

Filed Nov. 22, 1961, Ser. No. 154,261
17 Claims. (Cl. 60—51)

This invention relates to power devices and more particularly to a pressure fluid power device for operating hand tools.

An object of the invention is to provide a new and improved pressure fluid power device for operating hand tools.

Another object is to provide a power device for operating hand tools of the type having a reservoir of stored energy and a means for automatically releasing the energy to operate a desired hand tool.

Still another object is to provide a new and improved power device having a power reservoir in which a compressible fluid, such as gas, is maintained under pressure, and is employed to impart movement to a non-compressible driving fluid which in turn actuates a suitable driving means, such as a drive piston or hammer of a hand tool.

A further object is to provide a new and improved power device having a power reservoir in which a compressible fluid is maintained under pressure, an accumulator piston and a drive piston which are simultaneously movable to retracted or cocked positions by the introduction of a non-compressible power fluid into a cylinder in which the pistons are reciprocably movable, the power fluid acting on exposed areas of the drive piston to move it with the accumulator piston until it reaches its fully cocked position whereupon further movement of the accumulator piston exposes additional areas of the drive piston to the pressure of the power fluid whereupon the compressible fluid acting through the power fluid imparts drive movement to the drive piston.

A still further object is to provide a new and improved power device for operating hand tools having a drive piston movable by introduction of non-compressible power fluid into a cylinder to its fully cocked or retracted position and which is automatically releasable by a continued introduction of the power fluid into such cylinder for power or drive moment in the opposite direction to its fully extended position, such power movement of the drive piston being effected by the force of the compressed gas acting through an accumulator piston on the power fluid in such cylinder.

Another object is to provide a power device of the type described wherein the device is fully operable only when it is properly positioned with respect to a workpiece or structure, the device having means for deactuating the pump before the drive piston reaches its fully cocked position if the power device is not so properly positioned.

A still further object is to provide a power device of the type described wherein the drive piston and the body have cooperable means for slowing or braking the movement of the drive piston as it approaches its fully extended position to minimize the shocks to the body.

Additional objects and advantages of the invention will be readily apparent from the reading of the following description of a device constructed in accordance with the invention, and reference to the accompanying drawings thereof, wherein:

FIGURE 1 is a partly sectional view of the power device embodying the invention showing the drive piston and the accumulator piston in initial position prior to the commencement of the operation of the power device;

FIGURE 2 is a schematic illustration of the electric control circuit of the power device;

FIGURE 3 is a fragmentary sectional view showing the drive piston and accumulator piston in their extreme retracted or cocked positions;

FIGURE 4 is a view similar to FIGURE 3 showing the drive and accumulator pistons near the end of the drive stroke of the drive piston;

FIGURE 5 is a schematic illustration of another form of the power device embodying the invention; and

FIGURE 6 is a fragmentary sectional view of a modified form of the drive piston.

Referring now particularly to FIGURES 1 through 4 of the drawing, the power device **10** includes a body **11** having a lower piston-type hollow handle **12** whose open side may be closed by a suitable side plate, not shown, which is secured thereto by means of the bolts or screws **13**. The body **11** is provided with a main bore **14** which extends substantially perpendicularly to the hand grip **12** and has an internal annular flange **15** provided with an internal annular groove in which is disposed an O-ring **16** or other suitable sealing means which seals between the body and the drive piston **18**. The forward portion of the piston **18** is provided with a threaded bore into which extends the reduced portion **19** of an annular hammerhead **20**. The forward portion of the drive piston extends through a guide barrel **22** whose rear portion extends slidably into the main bore **14** and is provided with an elongate slot **24** into which extends the lower portion of a stop bolt **25** suitably threaded in a bore of the body. It will be apparent that the stop bolt by engaging the surfaces of the guide barrel defining the opposite ends of the slot limits inward and outward movement of the guide barrel in the main bore **14** of the body **11**. The barrel is biased outwardly to the outermost position illustrated in FIGURE 1 by a spring **27** disposed about the drive piston whose opposite ends engage the annular shoulder **28** provided by the internal flange **15** and the annular inner end surface **29** of the guide barrel.

The guide barrel has a second longitudinal slot **30** through which the operating arm **32** of a switch **33** extends inwardly into the guide barrel. The normally closed switch **33** has a contact **34** which is actuated by the operating arm **32** each time it is engaged by the hammerhead **20** to open the switch as the piston and the hammerhead are retracted inwardly. The guide barrel also has external lug **36** which is adapted to engage the operator arm **37** of the normally open switch **38** to move the contact **39** thereof into closed position. The switches **33** and **38** may be disposed in the same case or housing **40** secured in any suitable manner in the recess **42** of the body **11** disposed immediately below the main bore and communicating therewith. It will thus be apparent that as the drive piston is moved inwardly from the position illustrated in FIGURE 1 to the retracted or cocked position illustrated in FIGURE 3, the normally closed switch **33** is first opened and maintained open as long as the drive piston is in substantially its fully retracted position and the normally open switch **38** is closed as the guide barrel is moved to its fully retracted position.

The contacts **34** and **39** of the switches **33** and **38**, respectively, are connected in parallel relative to one another and in series with the movable contact **46** of the trigger switch **47** mounted in the handle **12** and the pump motor **49** which drives the pump **50**. One side of the pump motor is connected to one terminal **52*a*** of the input circuit **52** by the conductor **53** while the other side of the motor is connected to the movable contact **46** of the switch **47** by the conductor **54**. The stationary contact **55** of the trigger switch **47** is connected to the stationary contact **56** of the normally closed switch **33** by the conductor **57** and to the stationary contact **58** of the normally open switch by the conductors **57** and **60**. The movable contact **34** of the normally closed switch **33**

Koki Holdings America Ltd.
Ex. 1004, p. 3

is connected to the other terminal 52*b* of the input circuit by the conductor 62 while the movable contact 39 of the normally open switch is connected to the other terminal 52*b* of the input circuit by the conductors 62 and 63. It will thus be apparent that whenever one of the switches 33 or 38 is closed and the trigger switch is closed, the motor 49 will be connected across the input circuit 52 and will thus be energized.

The inner end of the drive piston has an annular tapered head 65 which provides an annular surface or shoulder 66 which engages the annular shoulder 67 of the annular flange 15 of the body 11 to limit outward movement of the drive piston. The end surface or face 68 of the head 65 is substantially concave and forms a seat for the annular seal 69 secured in any suitable manner, as by bonding, to the convex face or surface 70 of the accumulator piston 71. The area of the face 68 of the piston head sealed by the annular seal 69 is greater than the cross-sectional area of the drive piston 18 at the seal 16 so that when the seal 69 seals between the accumulator piston and the drive piston head, any fluid pressure which is exerted on the drive piston tends to move the piston head toward the accumulator piston and hold it in tight engagement therewith. Accordingly, fluid pressure introduced into the bore 14 of the body between the internal flange 15 and the accumulator piston, when the accumulator piston and the drive piston are in positions illustrated in FIGURE 1, will tend to force the drive piston head into engagement with the accumulator piston and tend to move the drive piston toward the right as seen in FIGURE 1.

The main bore 14 of the body is enlarged, as at 75, to receive an extension cylinder 76 which is secured to the body 11 in fluid tight relation therewith by any suitable means, such as by welding. The accumulator piston 71 is movable within the cylinder extension and has an external annular groove in which an O-ring 78 or any other suitable sealing means is disposed to seal between the cylinder extension and the accumulator piston.

An elongate accumulator shell 80 is threaded on the rearward extension 82 of the body and a gasket or other suitable sealing means 83 is interposed between the annular shoulder 84 of the body and the annular end of the accumulator shell 80 to effect a fluid tight seal therebetween. Compressed gas may be introduced into the power accumulator or compressed gas chamber 85 formed by the accumulator shell through a suitable valve 86. It will be apparent that when the chamber 85 is charged with a gas under pressure, the accumulator piston 71 will be forced to the left, as seen in FIGURE 1, to tend to hold the drive piston in the position illustrated in FIGURE 1 and with the annular seal 69 sealing between the faces 68 of the drive piston head and the face 70 of the accumulator piston.

The non-compressible fluid is introduced into the main bore between the shoulder 67 of the internal flange 15 of the body and the accumulator piston through a passage 88 of the body which communicates with the main bore which is connected to the outlet 90 of the pump by means of the conduit 91 whose opposite ends are connected to the body and to the outlet of the pump by any suitable fittings 92 and 93, respectively. The pump 50 and its drive motor 49 are mounted on a suitable bracket 94 of the body by any suitable means, such as the bolts 95, which extend into suitable threaded bores in the bracket. The inlet 96 of the pump is connected to a reservoir 98 by means of the conduit 99 whose opposite ends are connected to the outlet of the pump and to the reservoir 98 by suitable fittings 100 and 101. The conduit 99 communicates with the large chamber 104 of the reservoir through the outlet port 105. The reservoir is secured to the body in any suitable manner, as by bolts 106 which extend through lateral brackets 107 of the reservoir into suitable threaded bores in the body 11. A gasket 109 is interposed between the reservoir

98 and the upper surface of the body 11 to effect a fluid tight seal about the inlet port 111 of the reservoir, and the bypass flow passage 112. The inlet port opens into the large chamber 104 of the reservoir adjacent the end of the large chamber closed by the cap 113 threaded in the open end of the reservoir, a gasket 114 effecting a fluid tight seal therebetween. The bypass flow passage opens into the lower end of a valve chamber 115 below a ring seat 116 disposed in the body to provide a seat for the ball check valve 117. The ball check valve 117 is biased toward the vave seat 116 by a spring 119 whose lower end portions engage the ball check valve and whose upper portions telescope over a downwardly projecting extension 120 of the plug 121 which closes the upper end of the valve chamber 115. A passage 122 provides communication between the valve chamber and the passage 88. It will therefore be apparent that the pressure of the fluid being pumped through the passage 88 tends to hold the ball check valve 117 in sealed or closed position on the seat ring 116 preventing flow of fluid between the bypass passage 112 and the passage 88.

The ball check valve is normally held in open position by a rod 125 which extends through the body 11 upwardly through the passage 127 in the body 11 into the valve chamber and through the ring seat to engage the ball check valve 117. A suitable O-ring or other sealing means 128 is disposed in the passage 127 to seal between the operating rod and the body. The lower end of the rod 125 extends into the hollow handle 12. The operating rod is positioned and is held in proper position by guide pins 129 adjacent one side of the handle in order to clear the trigger lever 130. The trigger lever is pivoted intermediate its ends, as at 131, on a suitable pivot pin secured to the handle 12 and has a finger portion 132 which extends outwardly of the handle through a slot 133 thereof. The trigger lever is biased for movement in a counter-clockwise direction about its pivot by a spring 134 whose opposite ends bear against a wall of the handle and against the lower end 135 of the trigger. The trigger lever and the handle are provided with spring retainer pins 136 and 137, respectively, which telescope into opposite ends of the spring.

The trigger lever has an arm 140 which is engageable with the lower end of the operating rod 125 to hold it in its raised position, wherein it holds the ball check valve 117 displaced from the ring seat. The arm 140 of the trigger lever engages the trigger switch 47 and closes it when the trigger lever is pivoted in a clockwise manner against the resistance of the spring 134 as occurs when the operator forces inwardly into the handle of the finger portion 132 of the trigger lever. Such clockwise movement of the trigger lever permits the operating rod 125 to move downwardly both by gravity and also due to the force of the ball check valve spring 119. When the operator releases the inward force exerted on the finger portion 132, the force of the spring 134 pivots the trigger lever in a counter-clockwise direction permitting the normally open switch 47 to open and immediately thereafter moves the operating rod 125 upwardly to move the ball check valve 117 to its open position.

The non-compressible power fluid in the large chamber 104 of the reservoir 98 is held under a predetermined pressure by the piston 150 which is biased inwardly by a charge of compressed gas, contained in the small chamber 151 of the reservoir, which acts against the end of the reduced piston stem 152. The reduced piston stem 152 is provided with an external annular recess in which is disposed an O-ring 154 which seals between the piston stem and the cylindrical wall of the reservoir defining the small chamber 151. The piston 150 itself is similarly provided with an external annular recess in which is disposed an O-ring or other suitable sealing means 156 which seals between the piston and the cylindrical wall defining the large chamber 104 of the reservoir. A vent

157 is provided in the end of the large chamber remote from the ports 105 and 111 thereof to permit entry and escape of air from behind the piston 150 as the piston moves reciprocably in the reservoir. A suitable gas valve 159 is provided through which gas under pressure may be introduced to the small chamber 151 behind a piston stem 152.

It will now be seen that the piston 150 of the reservoir 98 holds the non-compressible power fluid in the large chamber of the reservoir under a predetermined pressure and that the piston 150 moves toward the cap 113 as the non-compressible power fluid is pumped out of the large chamber and into the main bore of the body to cause the accumulator piston and the drive piston to move toward their retraced or cocked positions.

The maintenance of the power fluid in the reservoir under a predetermined pressure reduces the load imposed on the pump 50 which must pump the power fluid from the large chamber of the reservoir into the main bore of the body against the force exerted on the accumulator piston by the compressed gas contained in the chamber 85.

The normal at rest positions of the accumulator piston and the drive piston are as shown in FIGURE 1, with the shoulder 66 of the head 65 of the drive piston engaging the annular shoulder 67 of the internal flange 15 of the body which thus limits the outward movement of the drive piston and with the accumulator piston 71 biased against the head 65 by the force of the compressed gas in the chamber 85. The accumulator piston seal 69 now prevents the application of any fluid pressure across the full cross-sectional area of the face 68 of the head 65.

When it is desired to cause the operation of the power device to perform some work, such as the driving of a nail, the trigger lever 130 is pivoted in a clockwise manner about its pivot 131 by forcing inwardly the finger portion 132 thereof. Such movement of the trigger lever permits the rod 125 to move downwardly and allows the ball check valve 117 to move to its closed position. The continued clockwise pivotal movement of the switch lever 130 then closes the trigger switch 47 and, since the normally closed switch 33 is now in its closed position, because its operating rod 32 is not now engaged by the head 20, the motor 49 is connected across the input circuit 52 and is energized. The power fluid is therefore pumped by the pump from the large chamber 104 of the reservoir 98 into the passage 88 of the body and thence to the main bore between the annular flange 67 and the accumulator piston 71. Since the ball check valve is now in closed position, none of the power fluid may pass from the passage 88 back to the large chamber 104 through the bypass passage 112. As the power fluid is pumped into the main bore of the body it causes the accumulator piston 71 and the drive piston to be moved to the right as seen in FIGURE 1. The drive piston is caused to move to the right with the accumulator piston since, as was explained above, the area of the face 68 sealed by the seal 69 is greater than the cross-sectional area of the piston 18 at the seal so that the fluid pressure acting on the drive piston tends to force the drive piston toward the accumulaor piston. Continued introduction of the power fluid to the main bore forces accumulator piston 71 and the drive piston to move toward the fully retracted positions thereof illustrated in FIGURE 3 against the force exerted by the compressed gas in the power accumulator or chamber 85. The drive piston and the accumulator head move toward the right until the rear edge or shoulder 165 of the hammer head of the drive piston engages the operating rod 32 of the normally closed switch 33. If at this time the guide barrel has not been moved inwardly to the position illustrated in FIGURES 3 and 4, the opening of the switch 33 will disconnect the motor 49 from hte input circuit and the movement of the drive piston and the accumulator piston will stop. When the forward end of the guide barrel is then pressed against the work piece or structure into which the nail is to be driven and the power device moved forwardly to cause the rear portion of the guide barrel to telescope into the main bore 14, the lug 36 engages the operating rod 37 of the normally open switch 38 and closes the switch so that the motor 49 is once again connected to the input circuit 52. As a result the pump 50 continues to pump fluid into the main bore causing further movement of the drive piston and the accumulator piston to the right until such further movement of the drive piston is arrested due to the engagement of the shoulder 165 of its hammer head with its annular shoulder 28 of the internal flange. At this time the drive piston is in its fully retracted or cocked position. The accumulator piston, however, is free to continue such movement as the pumping of the power fluid continues. Immediately upon such movement of the accumulator piston relative to the now stationary drive piston, the seal between the faces 68 and 70 of the drive piston head 65 and the accumulator piston 71, respectively, is broken. The pressure of the power fluid is now exerted across the whole cross-sectional area of the concave face 68 of the drive piston head 65 and as a result the drive piston is now moved forcibly and with great velocity toward the left due to the force exerted by the compressed gas of the power fluid in the main bore and in the cylinder expansion 76. The accumulator moves behind and follows the drive piston but since it extends across the full cross-sectional area of the bore of the cylinder extension, it moves at a slower speed than the drive piston. Such movement of the drive piston of course drives the nail into the workpiece or structure. The frusto-conical shape of the head 65 causes the head to tend to trap power fluid in the reduced annular space between the annular shoulders 67 and 165*a*, as the head 65 approaches the annular flange 15, since the annular space between the head and the inner edge of the shoulder 165*a* is decreased as the head moves past the shoulder 165*a* toward the shoulder 67. The diameter of the annular surface 166 is smaller than the diameter of the cylinder extension. As a result, this entrapment of the power liquid slows down the drive piston as it approaches the end of its power stroke and cushions the shock of the engagement of the shoulder 66 of the head 65 with the shoulder 67 of the annular flange. The accumulator piston is now held spaced from the drive piston head due to the presence of the additional power fluid which has been pumped into the main bore and into the cylinder extension by the pump 50. The pump 50 of course may continue to pump during the working or driving stroke of the drive piston but the movement of the drive piston is primarily due to the force exerted by the compressed gas in the chamber 85 which is transmitted through the accumulator piston to the power fluid.

When the nail has been driven into the workpiece or structure, the operator releases the trigger lever 130 to permit it to move in a counter-clockwise manner under the force exerted by the spring 134 which causes the motor 49 to become de-energized and the operating rod 125 to be raised to open the ball check valve.

The power fluid in the front of the accumulator piston is now forced by the pressure of the compressed gas in the chamber 85 to move through the passage 88, passage 122, the valve chamber 115 and bypass passage 112 into the large chamber 104, since the force exerted on the piston stem 152 by the compressed gas in the chamber 151 on the power fluid in the chamber 104 is smaller than the force exerted by the compressed gas on the power fluid in the main bore ahead of the accumulator piston 71. As a result the accumulator piston moves to the left until its seal 69 once again engages the face 68 of the head 65 of the drive piston and again provides a seal between a predetermined area of the faces 68 and 70 of the head 65 and the accumulator piston 71. The power device is then again in condition for another cycle of operation.

It will now be apparent that the power device illustrated and described performs work due to the expansion of the compressed gas in the power accumulator or gas chamber 85 since the gas introduced into the gas chamber 85 may be initially of a relatively large value, say 1,000 pounds per square inch, that the further compression of the gas in the chamber 85 due to the movement of the accumulator piston 71 in the cylinder extension 76 by the non-compressible power fluid causes it to attain a pressure of a still higher value, say 2,000 pounds per square inch, and that the energy thus stored in the compressed gas is employed to operate the drive piston which may perform such functions as the driving of a nail.

It will further be noted that the actuation or release of the drive piston is accomplished without the use of any valves or other devices, such as have been shown by prior Patent No. 2,867,086, susceptible to wear and malfunction, the arrestation of the movement of the drive piston when it is in fully retracted or cocked position and the continued movement of the accumulator piston automatically causing the drive piston to be driven to its fully extended position, the piston performing any suitable work during this driving movement or stroke.

If desired, the bypass passage, the ball check valve and its operating rod 125 may be omitted, the return of the power fluid from the main bore of the body to the reservoir then being through the pump which will be caused to rotate in its reverse direction as the power fluid is forced therethrough to the large chamber 104 by the force of the compressed gas in the chamber 85 acting on the accumulator piston 71.

If desired, the compressed gas chamber 85 may be connected by a suitable flow passage or conduit means to the small chamber 151 of the reservoir so that the pressure of the compressed gas from the power accumulator or compressed gas chamber 85 may be used to bias the reservoir piston 150.

While a resilient seal 69 has been illustrated and described as providing the seal between the joining faces 68 and 70 of the drive piston head and the accumulator piston, one of the faces may instead be provided with an annular flange which engages the other face to provide a metal to metal seal. In the event that the resilient seal 69 is of the O-ring type which must be deflected or distorted inwardly to effect a proper seal between the faces, the piston head 65, as shown in FIGURE 6, may be provided with a recess 170 in which may be disposed a resilient member having air entrapped therein, such as a ball 171 formed of rubber, synthetic plastic or the like, or a sponge having air entrapped in the pockets or voids thereof, so that the compression of the gas contained in such ball or in the pockets of such sponge will permit such distortion of the seal 69. The power fluid trapped between the faces in such seal of course will not permit such inward distortion or deflection of the O-ring since it is not compressible.

It will now be seen that the power device 10 includes a body having a bore 14 in which a drive piston 18 is reciprocably movable and that the piston has one end extendable outwardly of the bore, that the body has means which includes the section of the bore between the shoulders 67 and 165*a* of the body and the cylinder extension 76 which forms a cylinder, that the drive piston has its opposite end extending into such cylinder, that an accumulator piston is movably mounted in the cylinder, and that the compressed air in the chamber 85 formed by the body and the accumulator shell 80 constitutes a means for biasing the accumulator piston 71 toward the drive piston.

It will further be seen that the accumulator piston when it engages the drive piston seals a predetermined area of the drive piston from the pressure of the power fluid introduced into such cylinder by any suitable means, such as the pump 50, and that the body and the drive piston have coengageable means 67 and 66, respectively, for limiting movement of the drive piston so that the continued movement of the accumulator piston after movement of the drive piston has been arrested by the stop means causes the accumulator piston to disengage from the drive piston to expose the predetermined area of the drive piston to the pressure of the drive fluid so that the biasing means acting through the accumulator piston and the power fluid is then effective to move the drive piston from its retracted position toward its extended position.

It will further be seen that the drive piston 18 has head 65 thereon which, together with the reduced portion of such cylinder formed by the annular surface 166, cooperates to form a cushioning or shock absorbing means for slowing down movement of the drive piston as it approaches the extreme limit of its movement toward extended position.

It will further be seen that the means for introducing non-compressible drive fluid under pressure to the cylinder to move the drive piston and the accumulator piston toward retracted positions includes a pump 50 driven by a motor 49 and that the operation of the motor is controlled by the switches 33 and 38 which are operable by the guide barrel 22 to insure that the forward end of the guide barrel must be pressed against the structure into which the nail is to be driven before the drive piston is released for its work or drive movement or stroke.

It will further be seen that a bypass means is provided for allowing the power fluid to be moved from the cylinder into a reservoir upon the completion of a cycle of operation of the device and that the piston 150 is provided to hold the power fluid in the reservoir under a predetermined pressure to reduce the load on the pump.

The drive piston head 65 may also be provided with a passage 173 which opens laterally of the drive piston head and longitudinally into a valve chamber 174. A conical surface 175 of the piston head constitutes a seat for the ball valve 176 which is biased toward the seat by a spring 177. The spring has one end portion bearing against the ball valve and its other end portion against the inner surface of a plug 178 threaded in the bore of the head forming the valve chamber. The force with which the ball valve is held in engagement with the valve seat may be adjusted by rotating the plug. The plug has a passage 179 which permits access of power fluid pressure from the passage 173 to the face 68 of the piston head inwardly of the seal 69 when the ball valve is unseated.

It will be apparent that if the piston head is provided with the passage 173 and the ball valve 175, the pressure exerted by the spring 177 on the ball valve may be so adjusted that the ball valve will be moved to its open position by the pressure exerted by the power fluid, when the drive piston and the accumulator piston reach the cocked position to permit application of the pressure of the power fluid across the full area of its face 65 and the consequent forcing of the drive piston to its extended position. In this case, the cocked position may be the position reached by the drive piston just before the engagement of the shoulder 165 of the hammerhead 20 with the annular shoulder 28 of the internal flange so that the hammerhead never engages the annular head. This mode of operation therefore precludes the shock and vibration which would otherwise be imparted to the power device by such engagement.

It will thus be seen that the passage 173 and the ball valve of the head constitute a means for applying the pressure of the power fluid to the face of the drive piston when it attains a predetermined cocked position in the same manner that the shoulder 28 and shoulder 165 of the annular flange 15 and the hammerhead, respectively, constitute such means.

If desired, the ball valve may be biased toward its seat with such force that it will remain seated until the hammerhead engages the shoulder 28 and movement of the drive piston is thus arrested. The consequent sudden increase in the pressure in the cylinder and the decrease in pressure between the faces 68 and 70 due to forcing the accumulator

piston away from the drive piston will now cause the ball valve to move to open position before the pressure rises to such a value as to cause the seal **69** to break. Since in either of these two modes of operation of the ball valve, the seal is not forcibly broken, and is not subjected to the relatively great pressure differentials otherwise necessary to causing such forcible breaking of the seal, the life of the seal is prolonged.

In FIGURE 5 is schematically illustrated a modified form of the power device which has its drive piston **200** and the accumulator piston slideable in a cylinder **202**, one of whose ends is connected by a conduit **203** to a reduced section **204** of a cylinder **206**, which forms a gas chamber **205** of small diameter and whose other enlarged section **207** forms the large reservoir chamber **208** in which the non-compressible power fluid is contained. The inlet **210** of the pump **211** communicates with the power fluid reservoir chamber **208** while its outlet **213** communicates with the cylinder **202** at the end remote from the end which the conduit **203** connects to the cylinder **202**. A piston **214** has an enlarged head **215** disposed in the large section **207** of the cylinder **206**. The head **215** is provided with an O-ring or other suitable seal means **216** for sealing between the head and the cylinder. The piston **214** at the end portion remote from the enlarged head **215** is provided with a seal means **218**, such as an O-ring, which seals between the piston and the reduced section **204** of the cylinder.

The accumulator piston **201** has a seal means **220** for sealing between the cylinder **202** and the accumulator piston. A suitable seal **225** which has the same structure and function as the seal **69** of the device illustrated in FIGURE 1 seals between the face **226**, the accumulator piston and the face **227** of the head **228** of the drive piston.

As shown in FIGURE 5, a suitable vent **230** of the cylinder **207** permits the entry and escape of air from the cylinder between the shoulder **232** thereof and the enlarged head **215** thereof. The pump **211** functions in the same manner as the pump **50** to pump non-compressible power fluid from the large chamber **208** of the cylinder **206** into the cylinder **202** to move the drive piston **200** and the accumulator piston **201** toward their retracted or fully cocked positions, the drive piston being released, once its movement has been stopped while the movement of the accumulator piston **201** is continued, for driving movement to effectuate some work, such as the driving of a nail.

The power fluid is moved back to the large chamber **208** after the drive piston **200** has moved to its fully extended position by the pressure of the compressed gas, since the accumulator piston and the piston **214** have smaller areas exposed to the force of the compressed gas than the area of the piston head **215** exposed to the power fluid, through the pump **211** upon the completion of a work or drive stroke of the drive piston **200** until the accumulator piston **201** again engages the seal **225** of the drive piston head **228**. If desired, the motor driving the pump **211** may be of the reversible type driven by a motor also of the reversible type so that the power fluid may be pumped from the cylinder **202** back into the large chamber **208** of the cylinder **207** after the completion of the work stroke of the drive piston **200**.

It will be apparent that the areas of the accumulator piston and of the piston **214** exposed to the compressed gas in the chambers **205** and **230** are substantially equal but that the area of the piston head **215** exposed to the pressure of the power fluid in the reservoir chamber **208** is greater than these areas of the accumulator piston and the piston **214**. As a result, the piston **214** moves a smaller distance than the accumulator piston as the pump **211** moves a greater amount of power fluid from the reservoir chamber **208** into the cylinder **202** and the volume of the chamber **230** is decreased to a greater extent than the volume of the chamber **205** is increased. In addition, the inward movement of the drive piston **200** as power fluid is pumped into the cylinder **202**, causes a further movement of the accumulator piston thus causing a further decrease of the volume of the chamber **230** as compared to the increase in volume of the chamber **205**. As a result, the compressed gas biasing the accumulator piston against the drive piston is further compressed as the drive piston moves toward its fully retracted or cocked condition.

It will be apparent that, if desired, the diameter of the accumulator piston may be increased relative to the diameter of the piston **214** or the diameter of the piston head **215** decreased to reduce such additional compression of the compressed gas so that the load on the pump will be substantially uniform throughout the cycle of operation of the power device.

It will also be apparent that the operative cycle of operation of the pump may be reversed by making the area of piston **214** exposed to the pressure of the compressed gas in the chamber **205** greater than the area of the piston head **215** exposed to the pressure of the power fluid in the reservoir chamber **208**, so that the pump will pump power fluid from the cylinder **202**, after the drive piston has moved to its fully extended position, to move the piston **214** to the left against the force exerted by the compressed gas in the chamber **205** and to cause the accumulator piston to move to the right to engage the drive piston. When the pump is now deenergized, the compressed gas acting on the piston **214** will move both the drive piston and the accumulator piston to the left to their fully retracted or cocked positions and when the full face **227** of the head **228** of the drive piston is exposed to the power fluid in the manner described hereinabove, the drive piston will be moved to the right. The pump will then be energized to again pump power fluid from the cylinder **202** into the reservoir chamber **208** so that the cycle of operation of the power device may be repeated.

It will also be seen that the power fluid in the reservoir may be held under a predetermined pressure by a piston in the reservoir which may be biased by the pressure of the compressed gas of the compressed gas chamber by such means as a conduit connecting the chambers **85** and **151** or, FIGURE 5, the conduit **203** connecting the chambers **230** and **205**, the areas of the accumulator piston and the reservoir piston exposed to the pressures of the compressed gas and the power fluid being of such relative proportion as to cause a desired load to be imposed on the pump, in many cases it being preferable to impose a substantially constant load on the pump which is accomplished by having the areas of such relative proportions as to cause a desired minimum additional compression of the compressed gas during the pumping portion of the cycle of operation of the pump.

The foregoing description of the invention is explanatory only, and changes in the details of the construction illustrated may be made by those skilled in the art, within the scope of the appended claims, without departing from the spirit of the invention.

What is claimed and desired to be secured by Letters Patent is:

1. A power device including: a body having a bore; a drive piston reciprocably movable in said bore, said piston having one end portion extendable outwardly of said bore, said body having means providing a cylinder, said drive piston having an end portion opposite said one end portion extending into said cylinder; an accumulator piston reciprocably movable in said cylinder; means biasing said accumulator piston toward said drive piston and into engagement therewith; means for introducing a non-compressible power fluid into said cylinder for moving said drive piston and said accumulator piston toward retracted positions against the force exerted by said biasing means, said accumulator piston shielding a predetermined area of said drive piston from the force of the pressure of said power fluid when said accumulator piston is in engagement therewith; and coengageable stop means on said body and said drive piston for limiting movement of said drive

piston, whereby continued movement of said accumulator piston after movement of said drive piston is arrested by said stop means causes said accumulator piston to disengage from said drive piston whereby said predetermined area is exposed to the pressure of said drive fluid and said biasing means is effective to move said drive piston from said retracted position toward an extended position.

2. A power device including: a body having a bore; a drive piston reciprocably movable in said bore, said piston having one end portion extendable outwardly of said bore, said body having means providing a cylinder, said drive piston having an end portion opposite said one end portion extending into said cylinder; an accumulator piston reciprocably movable in said cylinder; means biasing said accumulator piston toward said drive piston and into engagement therewith; means for introducing a non-compressible power fluid into said cylinder for moving said drive piston and said accumulator piston toward retracted positions against the force exerted by said biasing means, said accumulator piston shielding a predetermined area of said drive piston from the force of the pressure of said power fluid when said accumulator piston is in engagement therewith; and means for exposing said predetermined area of said piston to the pressure of said power fluid when said drive piston has moved to a predetermined retracted position whereby said biasing means is effective to move said drive piston from said retracted position toward an extended position.

3. A power device including: a body having a bore; a drive piston reciprocably movable in said bore, said piston having one end portion extendable outwardly of said bore, said body having means providing a cylinder, said drive piston having an end portion opposite said one end portion extending into said cylinder; an accumulator piston reciprocably movable in said cylinder; means biasing said accumulator piston toward said drive piston and into engagement therewith; means for introducing a non-compressible power fluid into said cylinder for moving said drive piston and said accumulator piston toward retracted positions against the force exerted by said biasing means, said accumulator piston shielding a predetermined area of said drive piston from the force of the pressure of said power fluid when said accumulator piston is in engagement therewith, said drive piston having a smaller total area thereof exposed to said power fluid than said accumulator piston.

4. A power device including: a body having a bore; a drive piston reciprocably movable in said bore, said piston having one end portion extendable outwardly of said bore, said body having means providing a cylinder and a chamber communicating with said cylinder, said drive piston having an end portion opposite said one end portion extending into one end of said cylinder, said chamber communicating with the end of said cylinder opposite to said one end; an accumulator piston reciprocably movable in said cylinder between said chamber and said drive piston, said chamber being adapted to contain gas under pressure whereby said gas under pressure biases said accumulator piston toward said drive piston and into engagement therewith; means for introducing a non-compressible power fluid into said cylinder for moving said drive piston and said accumulator piston toward said opposite end of said cylinder toward retracted positions against the force exerted by said compressed gas, said accumulator piston shielding a predetermined area of said drive piston from the force of the pressure of said power fluid when said accumulator piston is in engagement therewith; and automatically operable means for exposing said predetermined area of said drive piston to the pressure of said power fluid when said drive piston moves to said retracted position whereby said biasing means is then effective to move said drive piston from said retracted position toward an expanded position.

5. A power device including: a body having a bore; a drive piston reciprocably movable in said bore, said piston having one end portion extendable outwardly of said bore, said body having means providing a cylinder, said drive piston having an end portion opposite said one end portion extending into said cylinder; an accumulator piston reciprocably movable in said cylinder; means biasing said accumulator piston toward said drive piston and into engagement therewith; means for introducing a power fluid into said cylinder for moving said drive piston and said accumulator piston toward retracted positions against the force exerted by said biasing means, said means for introducing a power fluid into said cylinder including a power fluid reservoir; and pump means for moving fluid from said reservoir to said cylinder.

6. A power device including: a body having a bore; a drive piston reciprocably movable in said bore, said piston having one end portion extendable outwardly of said bore, said body having means providing a cylinder, said drive piston having an end portion opposite said one end portion extending into said cylinder; an accumulator piston reciprocably movable in said cylinder; means biasing said accumulator piston toward said drive piston and into engagement therewith; means for introducing a non-compressible power fluid into said cylinder for moving said drive piston and said accumulator piston toward retracted positions against the force exerted by said biasing means, said means for introducing power fluid into said cylinder including a power fluid reservoir; pump means for moving fluid from said reservoir to said cylinder, said accumulator piston shielding a predetermined area of said drive piston from the force of the pressure of said power fluid when said accumulator piston is in engagement therewith; and means for exposing said predetermined area of said piston to the pressure of said power fluid when said drive piston has moved to a predetermined retracted position whereby said biasing means is effective to move said drive piston from said retracted position toward an extended position.

7. A power device including: a body having a bore; a drive piston reciprocably movable in said bore, said piston having one end portion extendable outwardly of said bore, said body having means providing a cylinder and a chamber communicating with said cylinder, said drive piston having an end portion opposite said one end portion extending into one end of said cylinder, said chamber communicating with the end of said cylinder opposite to said one end; an accumulator piston reciprocably movable in said cylinder between said chamber and said drive piston, said chamber being adapted to contain gas under pressure whereby said gas under pressure biases said accumulator piston toward said drive piston and into engagement therewith; means for introducing a non-compressible power fluid into said cylinder for moving said drive piston and said accumulator piston toward said opposite end of said cylinder toward retracted positions against the force exerted by said compressed gas, said means for introducing power fluid into said cylinder including a power fluid reservoir and pump means for moving fluid from said reservoir to said cylinder, said accumulator piston shielding a predetermined area of said drive piston from the force of the pressure of said power fluid when said accumulator piston is in engagement therewith; and automatically operable means for exposing said predetermined area of said drive piston to the pressure of said power fluid when said drive piston moves to said retracted position whereby said biasing means is then effective to move said drive piston from said retracted position toward an expanded position.

8. The power device of claim 5, having a guide barrel secured to said body for limited longitudinal movement relative thereto between an initial extended position and a retracted position relative to said body, said one portion of said drive piston extending into said guide barrel; means biasing said guide barrel toward said extended position; first means actuable to energize said pump means; second means actuable by the movement of said

drive piston from extended position to a position short of its retracted position for preventing operation of said pump means even when said first means is actuated; and third means responsive to the movement of said guide barrel to its retracted position for permitting operation of said pump means when said first means is actuated even when the second means is actuated.

9. The power device of claim 6 having a guide barrel secured to said body for limited longitudinal movement relative thereto between an initial extended position and a retracted position relative to said body, said one portion of said drive piston extending into said guide barrel; means biasing said guide barrel toward said extended position; first means actuable to energize said pump means; second means actuable by the movement of said drive piston from extended position to a position short of its retracted position for preventing operation of said pump means even when said first means is actuated; and third means responsive to the movement of said guide barrel to its retracted position for permitting operation of said pump means when said first means is actuated even when the second means is actuated.

10. The power device of claim 2, wherein said drive piston is provided with a passage communicating at one end with said cylinder at a point spaced from said predetermined area and its other end opening at said predetermined area, and pressure responsive valve means for closing said passage whereby said passage is opened when the pressure of said power fluid in said cylinder exceeds a predetermined value.

11. The power device of claim 4 wherein, said automatically operable means comprises coengageable stop means on said body and said drive means for limiting movement of said drive piston from its extended position.

12. The power device of claim 4 wherein, said automatically operable means comprises coengageable stop means on said body and said drive means for limiting movement of said drive piston from its extended position, said drive piston being provided with a passage communicating at one end with said cylinder at a point spaced from said predetermined area and its other end opening at said predetermined area, and pressure responsive valve means for closing said passage whereby said passage is opened when the pressure of said power fluid in said cylinder exceeds a predetermined value.

13. The power device of claim 7, and means for maintaining the power liquid in said reservoir under pressure.

14. The power device of claim 13, wherein said means for maintaining the power liquid in said reservoir comprises a piston movable in said reservoir and means biasing said piston toward a position maintaining the power liquid under pressure.

15. The power device of claim 14, wherein said means for biasing said reservoir piston includes means providing communication between said chamber and said reservoir whereby pressure of compressed gas in said chamber is applied to said reservoir piston.

16. The power device of claim 15, wherein the areas of the accumulator piston and the drive piston exposed to the pressure of the compressed gas and the areas of the accumulator piston and the reservoir piston exposed to the power fluid are of such relative proportions as to provide an almost uniform load for said pump means during the operative portion of the cycle of operation of said pump means.

17. The power device of claim 5 wherein said accumulator piston seals a predetermined area of said drive piston from the force of the pressure of said power fluid when said accumulator piston is in engagement therewith, said predetermined area of said piston being exposed to the pressure of said power fluid when said drive piston has moved to a predetermined retracted position whereby said biasing means is effective to move said drive piston from said retracted position toward an extended position.

References Cited in the file of this patent

UNITED STATES PATENTS

2,919,678 Sublett et al. ---------- Jan. 5, 1960