US011845167B2

(12) **United States Patent**
Leimbach et al.

(10) **Patent No.: US 11,845,167 B2**
(45) **Date of Patent: Dec. 19, 2023**

(54) **FASTENER DRIVING TOOL USING A GAS SPRING**

(71) Applicant: **Kyocera Senco Industrial Tools, Inc.**, Cincinnati, OH (US)

(72) Inventors: **Richard L Leimbach**, Cincinnati, OH (US); **Thomas A. McCardle**, Cincinnati, OH (US); **Danny L. Bolender**, Sardinia, OH (US); **Steve Dickinson**, Cincinnati, OH (US); **Joseph R. Knueven**, Cincinnati, OH (US); **Robert L. Lance, Jr.**, Midland, OH (US); **Dan Stoltz**, Sardinia, OH (US); **Michael V. Petrocelli**, Bethel, OH (US)

(73) Assignee: **Kyocera Senco Industrial Tools, Inc.**, Cincinnati, OH (US)

(*) Notice: Subject to any disclaimer, the term of this patent is extended or adjusted under 35 U.S.C. 154(b) by 0 days.

(21) Appl. No.: **17/571,811**

(22) Filed: **Jan. 10, 2022**

(65) **Prior Publication Data**

US 2022/0126433 A1 Apr. 28, 2022

Related U.S. Application Data

(60) Continuation of application No. 16/398,944, filed on Apr. 30, 2019, now Pat. No. 11,241,776, which is a (Continued)

(51) **Int. Cl.**

B25C 1/04	(2006.01)
B25C 1/06	(2006.01)
B25C 5/13	(2006.01)

(52) **U.S. Cl.**

CPC ***B25C 1/047*** (2013.01); ***B25C 1/041*** (2013.01); ***B25C 1/06*** (2013.01); ***B25C 5/13*** (2013.01); *B25C 1/04* (2013.01)

(58) **Field of Classification Search**

CPC B25C 1/047; B25C 1/041; B25C 1/06; B25C 5/13; B25C 1/04

(Continued)

(56) **References Cited**

U.S. PATENT DOCUMENTS

860,536	A	7/1907	Ellingham
1,774,967	A	9/1930	Ellis

(Continued)

FOREIGN PATENT DOCUMENTS

DE	1503164	3/1970
DE	8711784	8/1987
GB	1559571	1/1980

OTHER PUBLICATIONS

International Search Report, PCT/US2008/078408, 10 pages (dated Dec. 8, 2008).

(Continued)

Primary Examiner — Michelle Lopez

(74) *Attorney, Agent, or Firm* — Frederick H. Gribbell; Russell F. Gribbell

(57) **ABSTRACT**

A portable linear fastener driving tool is provided that drive staples, nails, or other linearly driven fasteners. The tool uses a gas spring principle, in which a cylinder filled with compressed gas is used to quickly force a piston through a driving stroke movement, while a driver also drives a fastener into a workpiece. The piston/driver is then moved back to its starting position by use of a rotary-to-linear lifter, and the piston again compresses the gas above the piston, thereby preparing the tool for another driving stroke. The driver has protrusions along its edges that contact the lifter, which lifts the driver during a return stroke. A pivotable latch is controlled to move into either an interfering position or a non-interfering position with respect to the driver

(Continued)

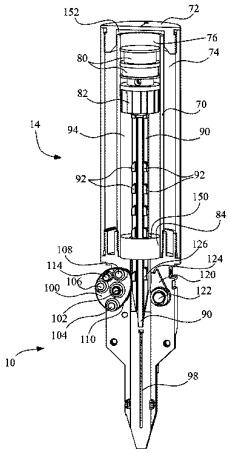

protrusions, and acts as a safety device, by preventing the driver from making a full driving stroke at an improper time.

15 Claims, 45 Drawing Sheets

Related U.S. Application Data

continuation of application No. 15/583,202, filed on May 1, 2017, now Pat. No. 10,478,954, which is a continuation of application No. 14/077,313, filed on Nov. 12, 2013, now Pat. No. 9,676,088, which is a division of application No. 13/770,481, filed on Feb. 19, 2013, now Pat. No. 8,602,282, which is a continuation of application No. 12/913,049, filed on Oct. 27, 2010, now Pat. No. 8,387,718, which is a division of application No. 12/243,693, filed on Oct. 1, 2008, now Pat. No. 8,011,441.

(60) Provisional application No. 60/977,678, filed on Oct. 5, 2007.

(58) **Field of Classification Search**
USPC 227/8, 130
See application file for complete search history.

(56) **References Cited**

U.S. PATENT DOCUMENTS

2,575,455	A	11/1951	Ang	
2,814,041	A	11/1957	Haley	
2,933,290	A *	4/1960	Ryder, Jr.	E21B 7/021 173/148
3,150,488	A	9/1964	Haley	
3,589,588	A	6/1971	Vasku	
3,847,322	A	11/1974	Smith	
3,878,902	A	4/1975	Matsuo	
3,913,685	A	10/1975	Enstrom	
3,924,692	A	12/1975	Saari	
4,203,353	A	5/1980	Bernham et al.	
4,215,808	A *	8/1980	Sollberger	B25C 1/041 227/132
4,530,455	A	7/1985	Vornberger	
4,741,518	A	5/1988	Wallis	
5,199,627	A	4/1993	Christensen	
5,503,319	A	4/1996	Lai	
5,605,268	A	2/1997	Hayashi	
5,720,423	A *	2/1998	Kondo	B25C 1/06 227/132
6,533,156	B1	3/2003	Chang	
6,669,072	B2	12/2003	Burke	
6,938,811	B2	9/2005	Ehmig et al.	
6,997,367	B2	2/2006	Hu	
7,040,521	B2	5/2006	Kolodziej et al.	
7,225,961	B1	6/2007	Lee	
7,225,962	B2	6/2007	Porth et al.	
7,494,036	B2	2/2009	Shima	
2003/0218042	A1	11/2003	Odoni et al.	
2005/0082334	A1	4/2005	Hu	
2005/0217875	A1	10/2005	Forster	
2006/0180631	A1	8/2006	Pedicini	
2007/0007319	A1	1/2007	Simonelli	
2007/0045377	A1	3/2007	Towfighi	
2008/0041914	A1	2/2008	Simonelli	
2008/0067213	A1	3/2008	Shima	
2008/0190988	A1	8/2008	Pedicini	

OTHER PUBLICATIONS

Two-page "Tool Assembly" drawing of Senco Model No. SN952XP pneumatic tool; dated Mar. 4, 2008; representative of earlier tools in public use before 2006; Admitted Prior Art.

One-page magnified view of "Tool Assembly" drawing of Senco Model No. SN952XP pneumatic tool; Mar. 4, 2008; representative of earlier tools in public use before 2006; Admitted Prior Art.

European Search Report for EP 08 83 4872, dated Nov. 19, 2015.

Sixteen page Operating Instructions for Senco AirFree 41 Cordless Finish Nailer, Sep. 7, 2001. Note: this is an old "flywheel" tool—see U.S. Pat. No. 6,669,072.

Four page Parts Reference Guide for Senco AirFree 41 Cordless Finish Nailer; 2004. Note: this is an old "flywheel" tool—see U.S. Pat. No. 6,669,072.

Four page Parts Reference Guide for Senco Cordless Finish 41 15 ga. Finish Nailer, 2008. Note: this is an old "flywheel" tool—see U.S. Pat. No. 6,669,072.

* cited by examiner

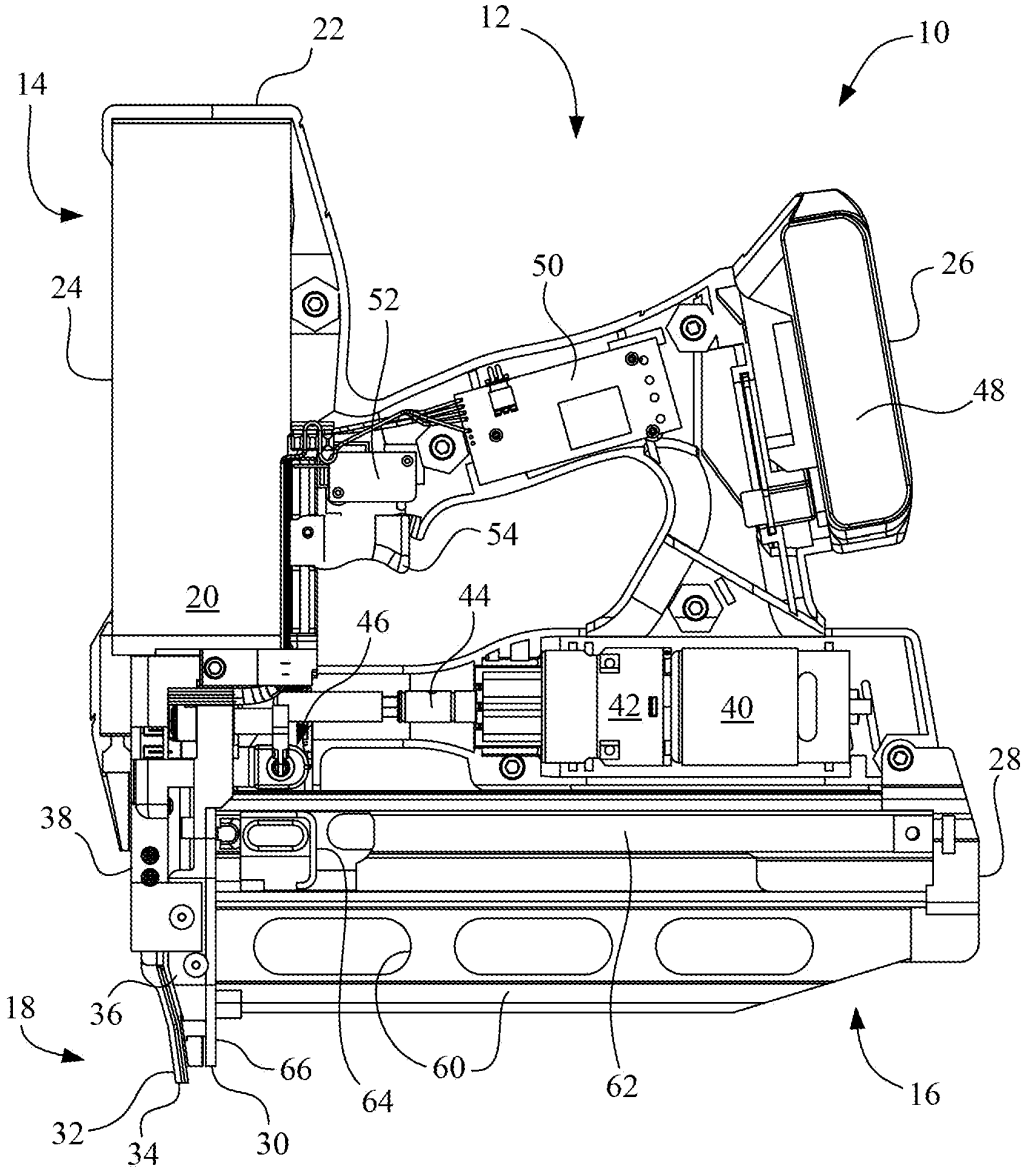
22
12
10
14
24
52
50
26
48
54
20
44
46
42
40
28
38
18
36
66
60
62
16
64
32
34
30

Fig. 1

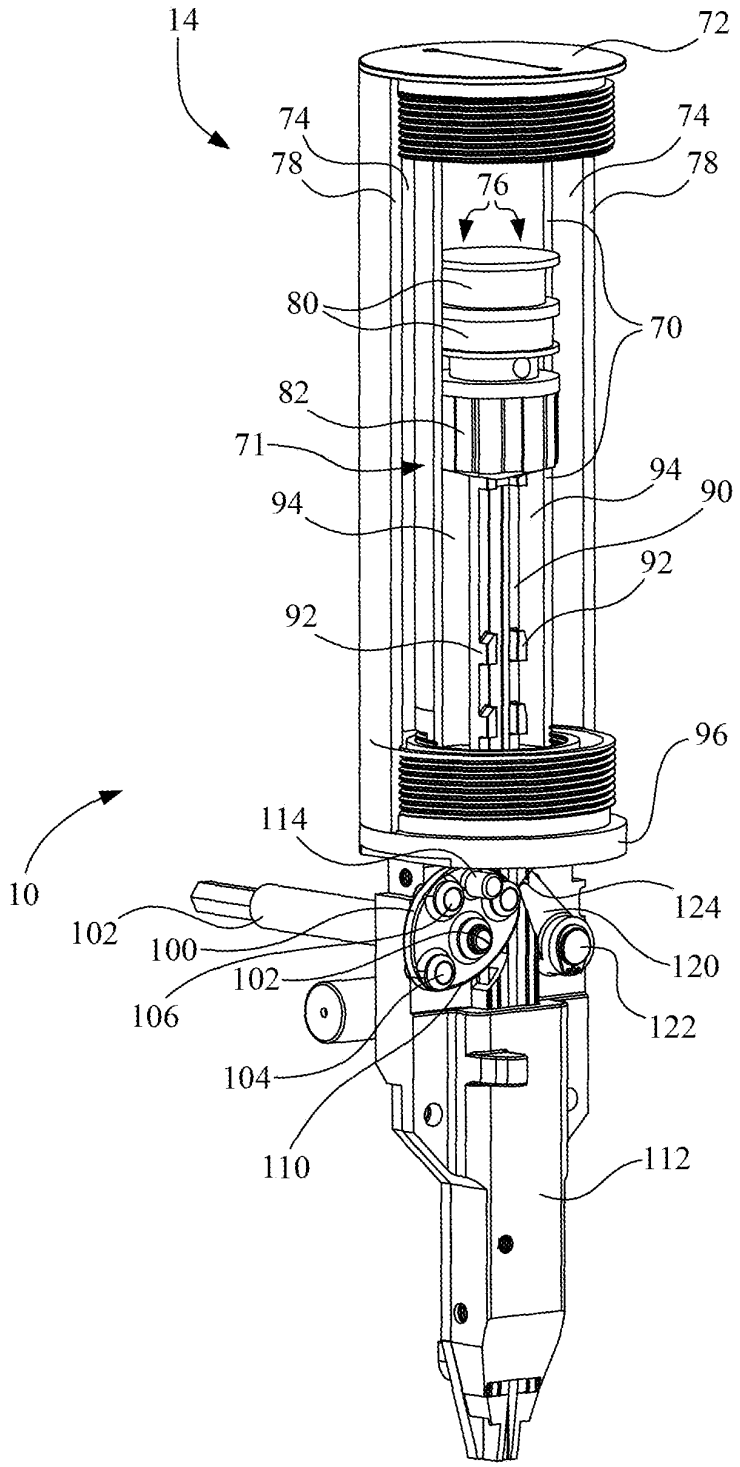
14
72
74
74
78
78
76
80
70
82
71
94
94
90
92
92
96
114
10
124
102
100
120
102
106
122
104
110
112

Fig. 2

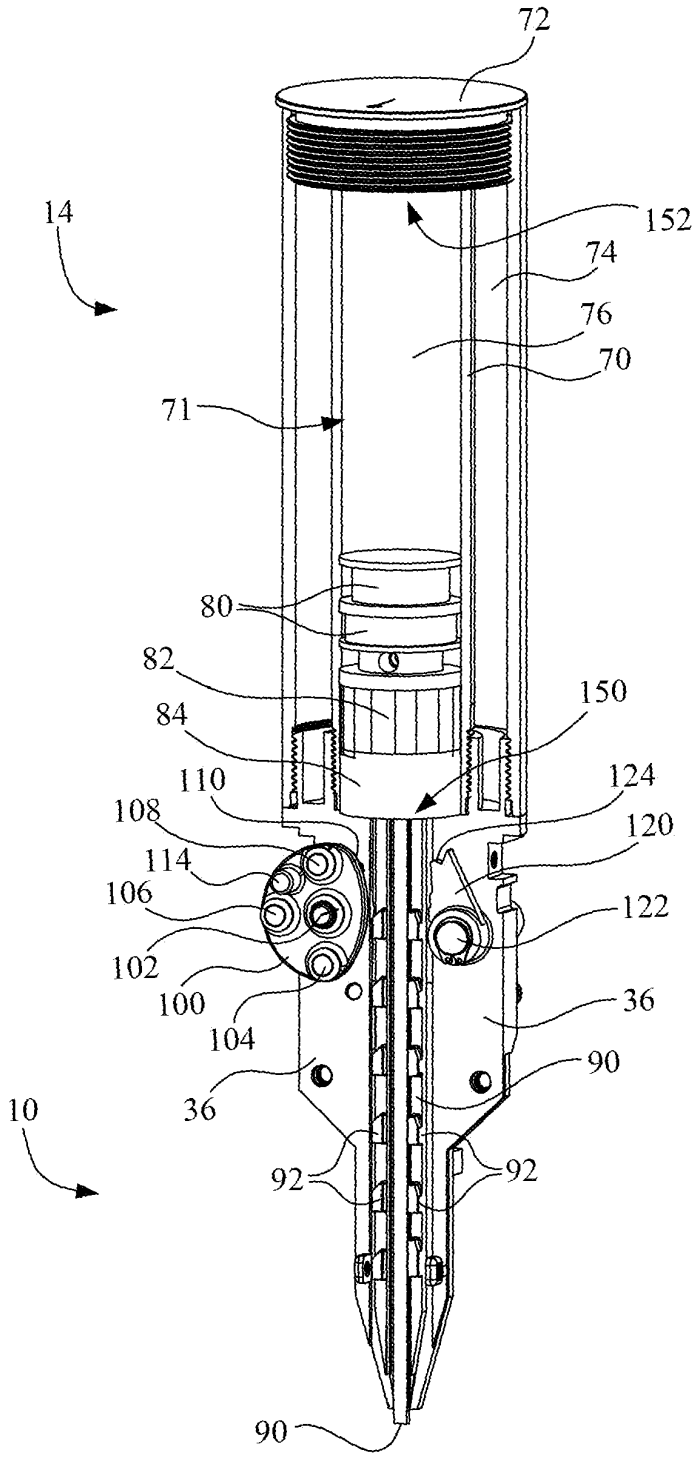
72
14
152
74
76
70
71
80
82
150
84
110
124
108
120
114
106
122
102
100
36
104
90
10
36
92
92
90

Fig. 3

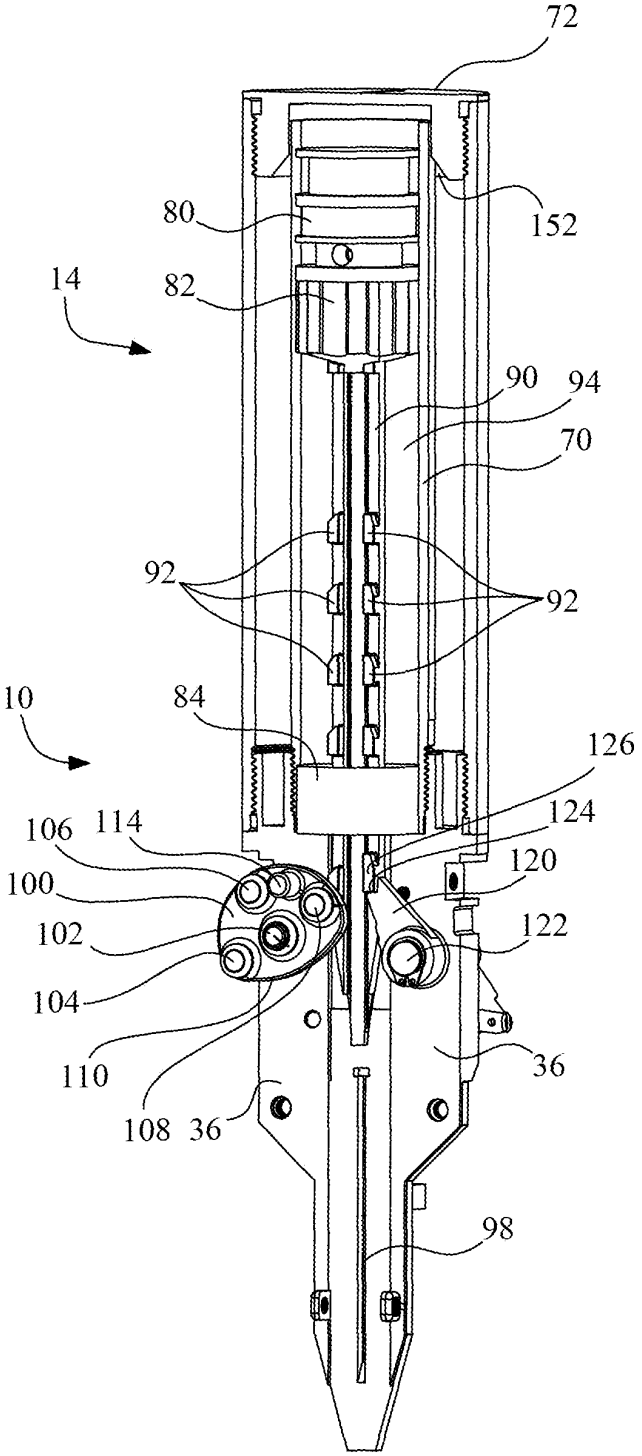
72
152
80
14
82
90
94
70
92
92
10
84
126
124
106
114
120
100
122
102
104
110
36
108
36
98

Fig. 4

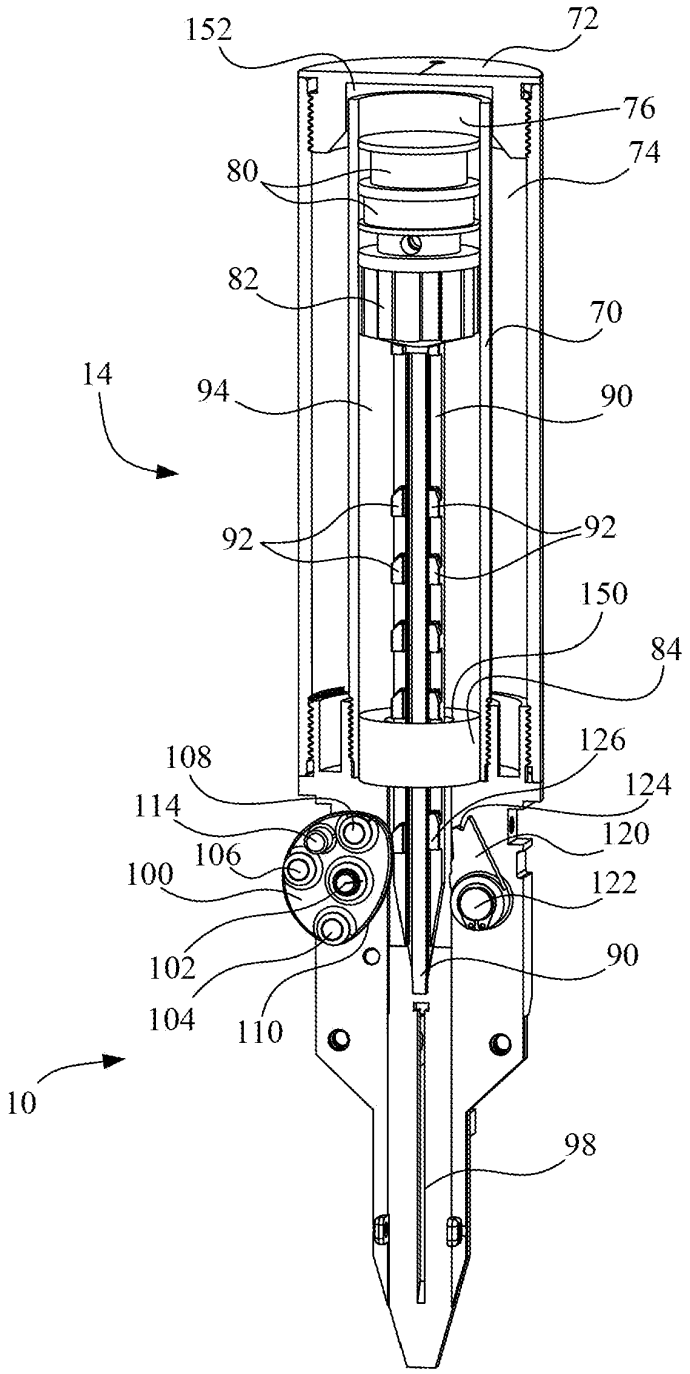
152
72
76
74
80
82
70
14
94
90
92
92
150
84
126
108
124
114
120
106
100
122
102
90
104
110
10
98

Fig. 5

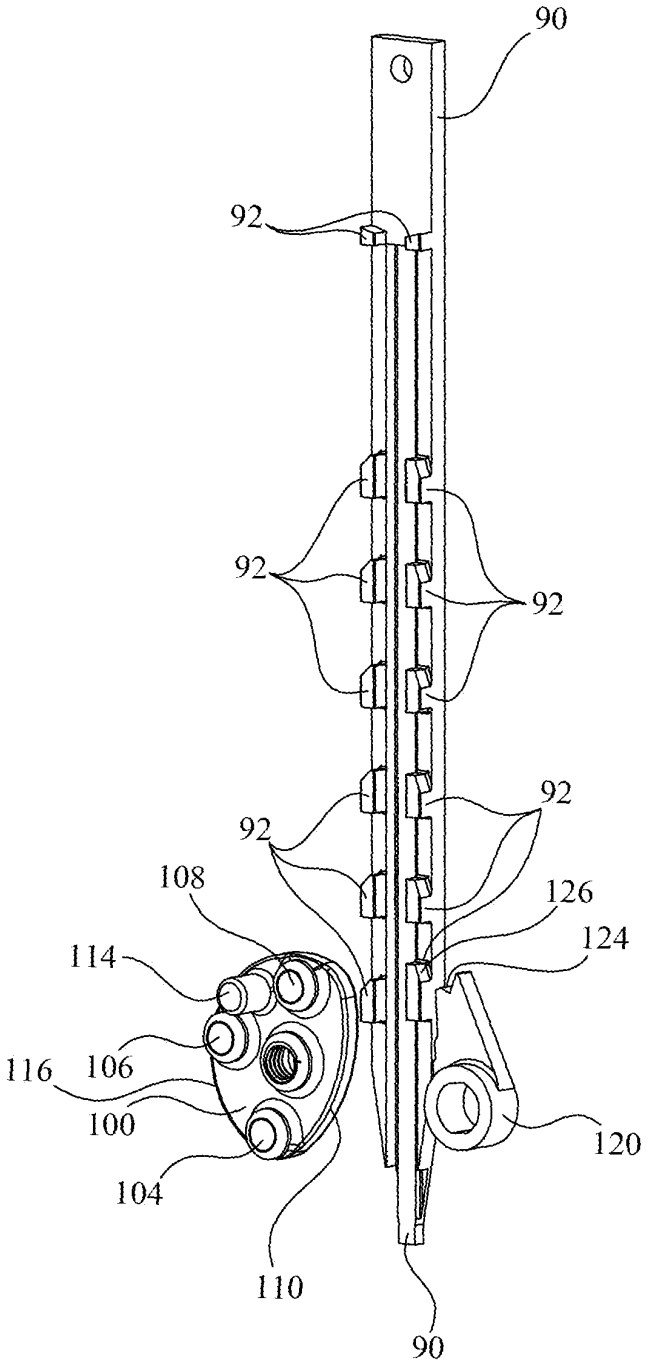

Fig. 6

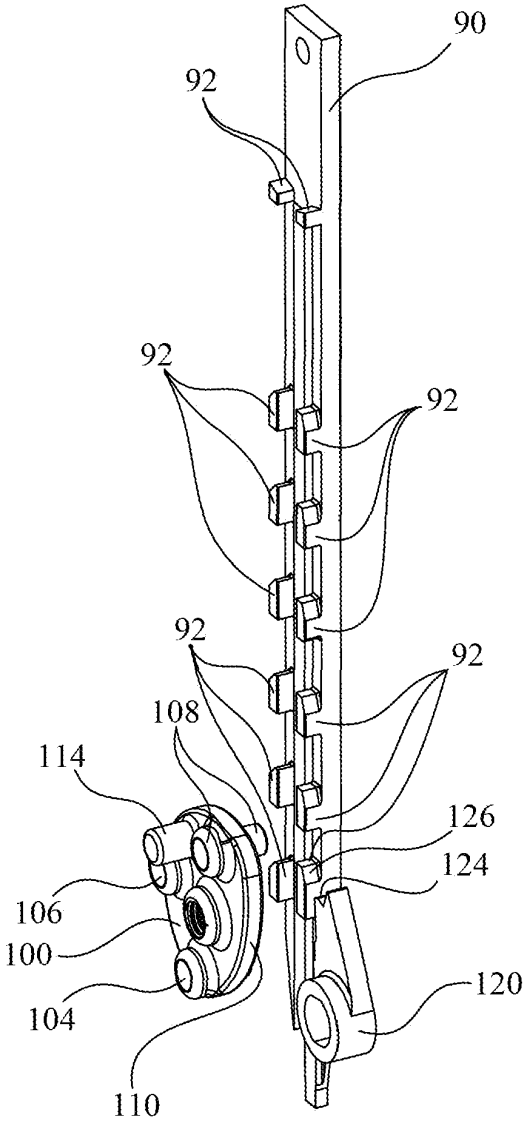

Fig. 7

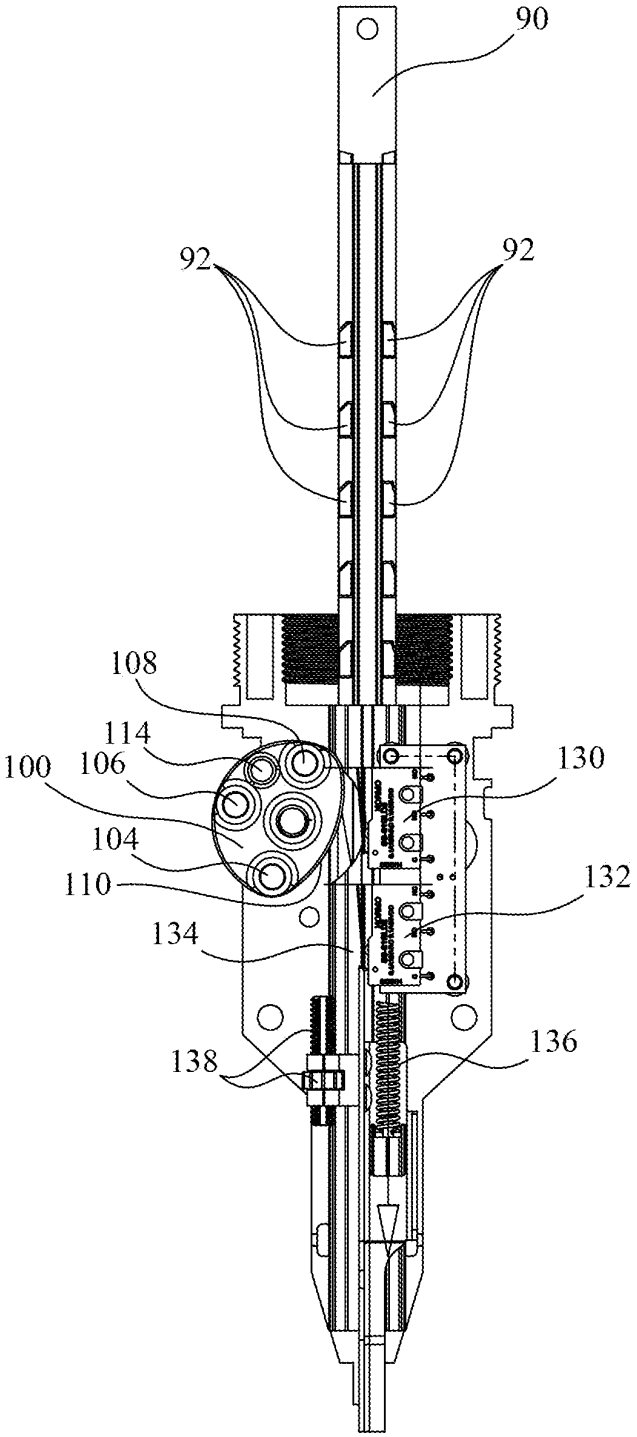

Fig. 8

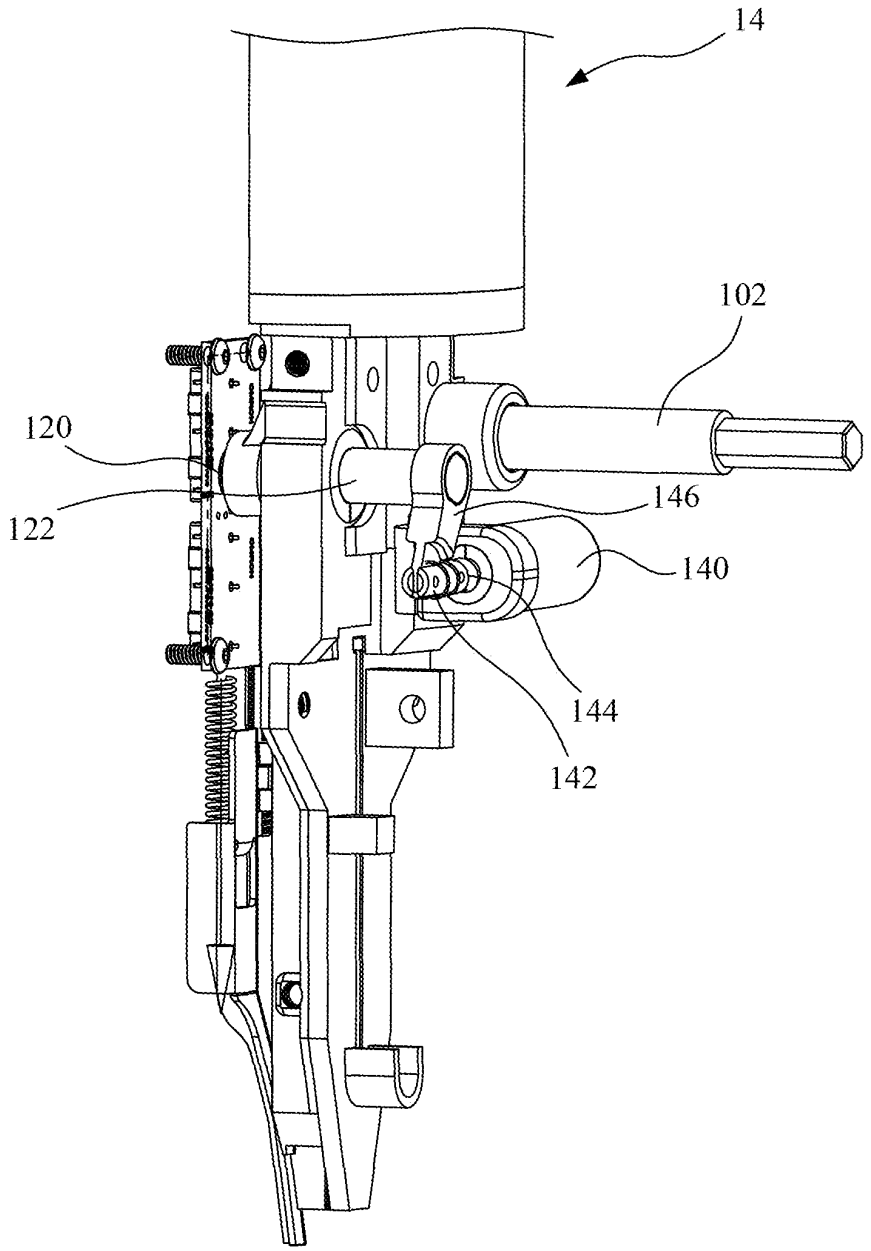

Fig. 9

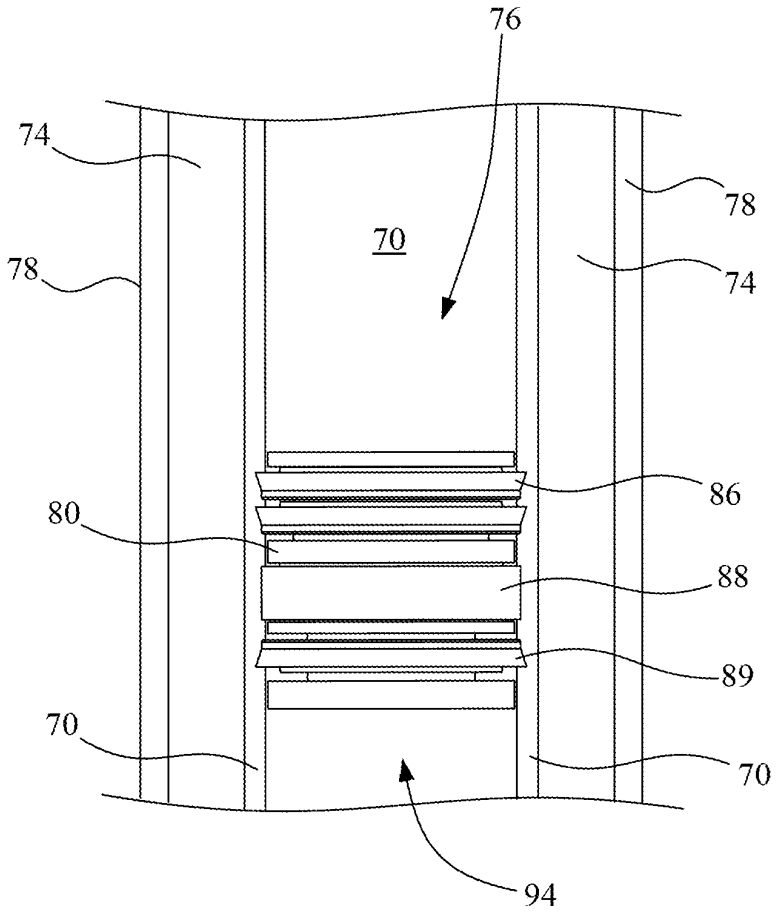

Fig. 10

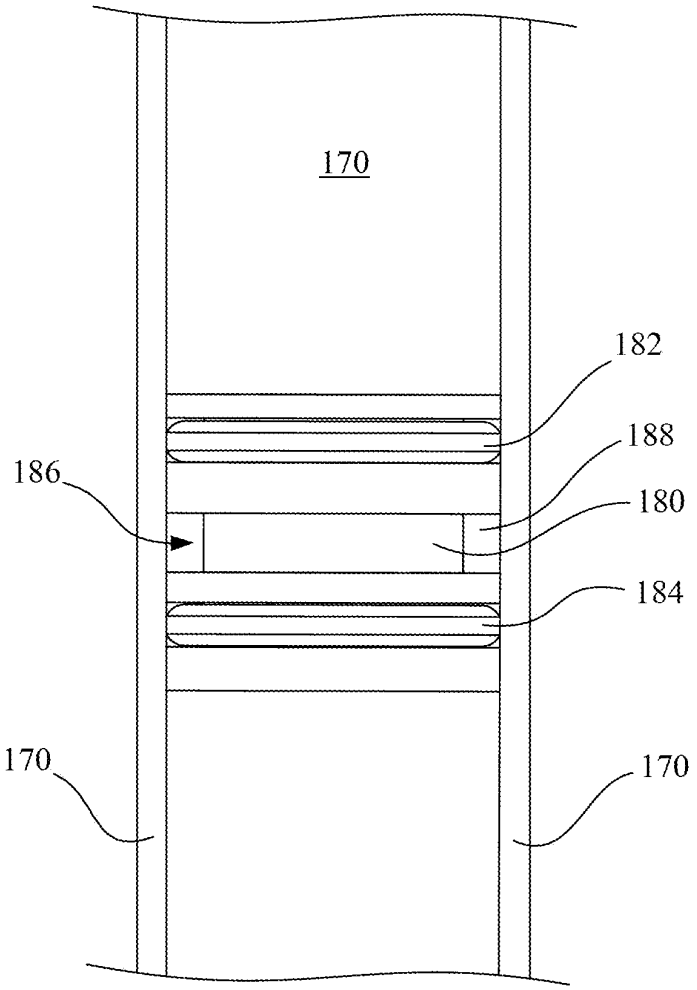

Fig. 11

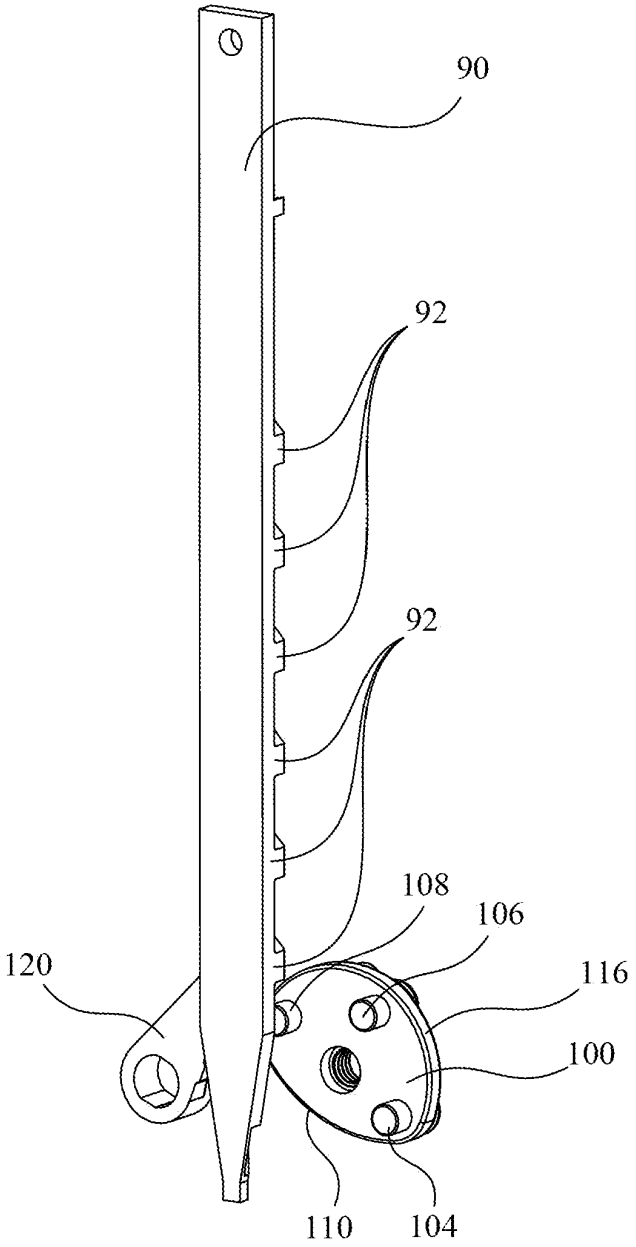

Fig. 12

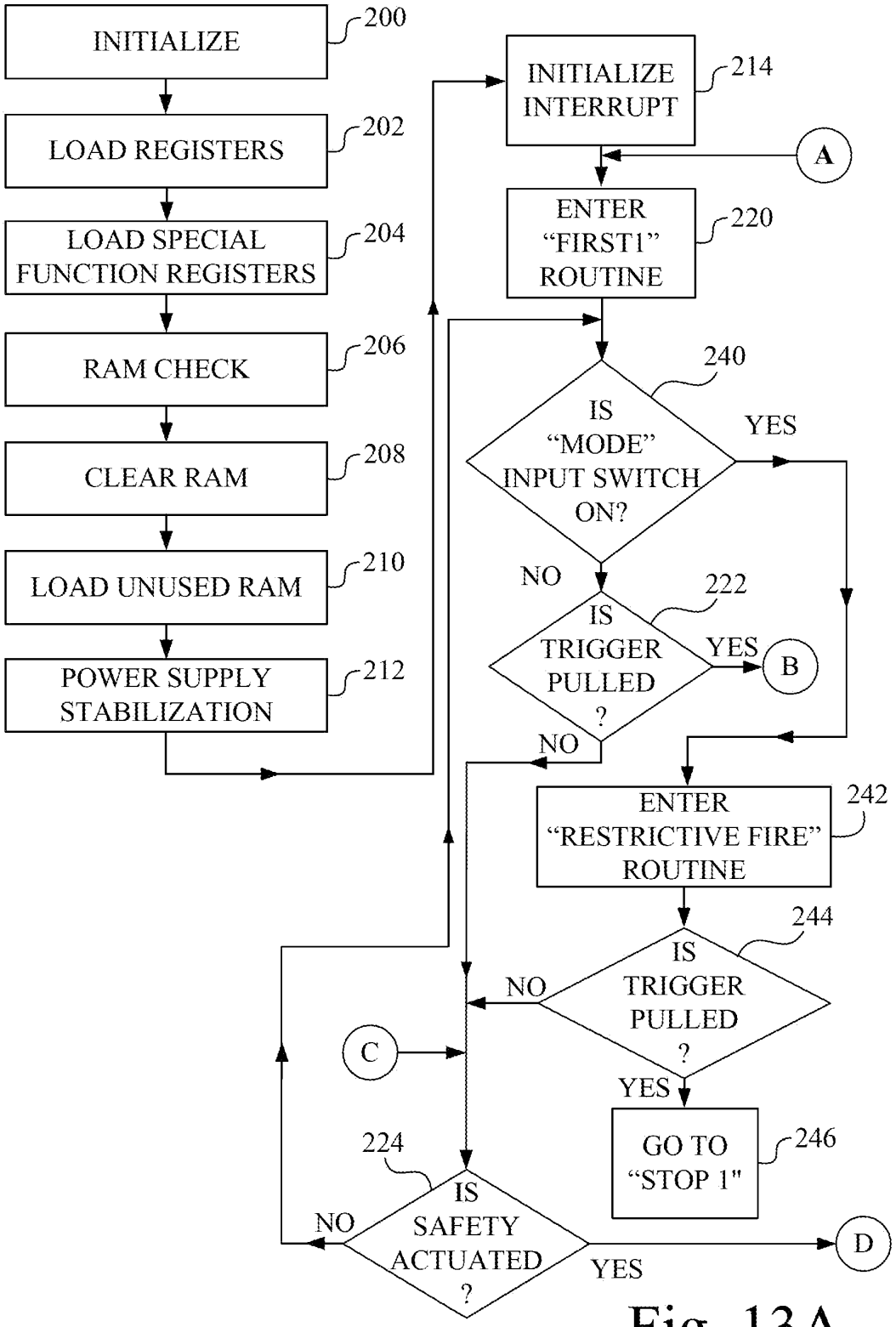
INITIALIZE
200
LOAD REGISTERS
202
LOAD SPECIAL FUNCTION REGISTERS
204
RAM CHECK
206
CLEAR RAM
208
LOAD UNUSED RAM
210
POWER SUPPLY STABILIZATION
212
INITIALIZE INTERRUPT
214
A
ENTER "FIRST1" ROUTINE
220
240
IS "MODE" INPUT SWITCH ON?
YES
NO
222
IS TRIGGER PULLED ?
YES
B
NO
ENTER "RESTRICTIVE FIRE" ROUTINE
242
244
IS TRIGGER PULLED ?
NO
C
YES
GO TO "STOP 1"
246
224
IS SAFETY ACTUATED ?
NO
YES
D

Fig. 13A

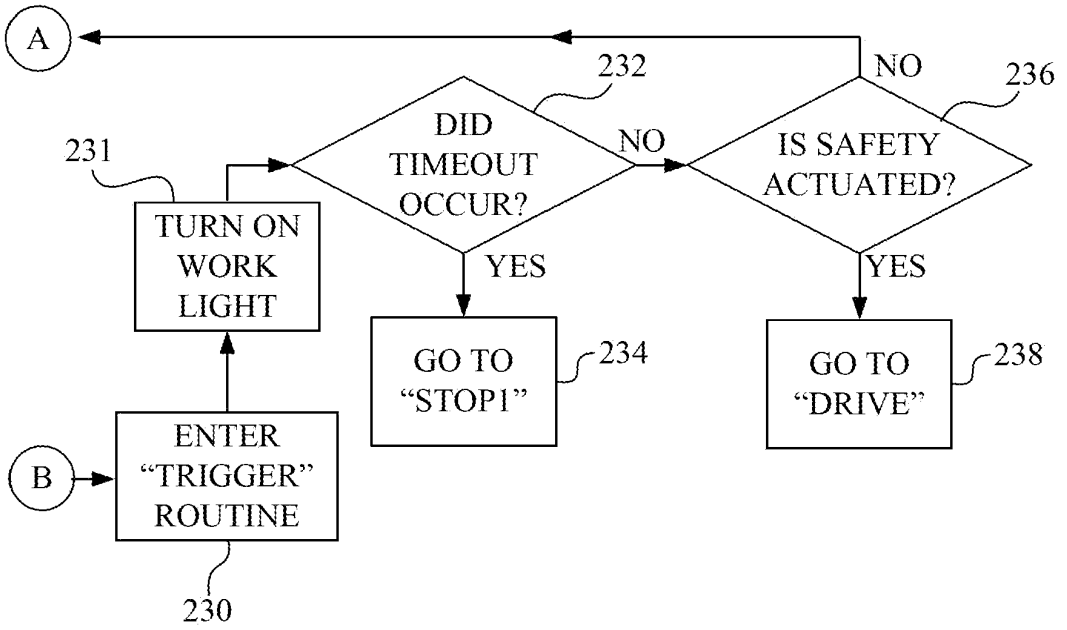
A
NO
232
236
DID TIMEOUT OCCUR?
NO
IS SAFETY ACTUATED?
231
TURN ON WORK LIGHT
YES
YES
GO TO "STOP1"
234
GO TO "DRIVE"
238
B
ENTER "TRIGGER" ROUTINE
230

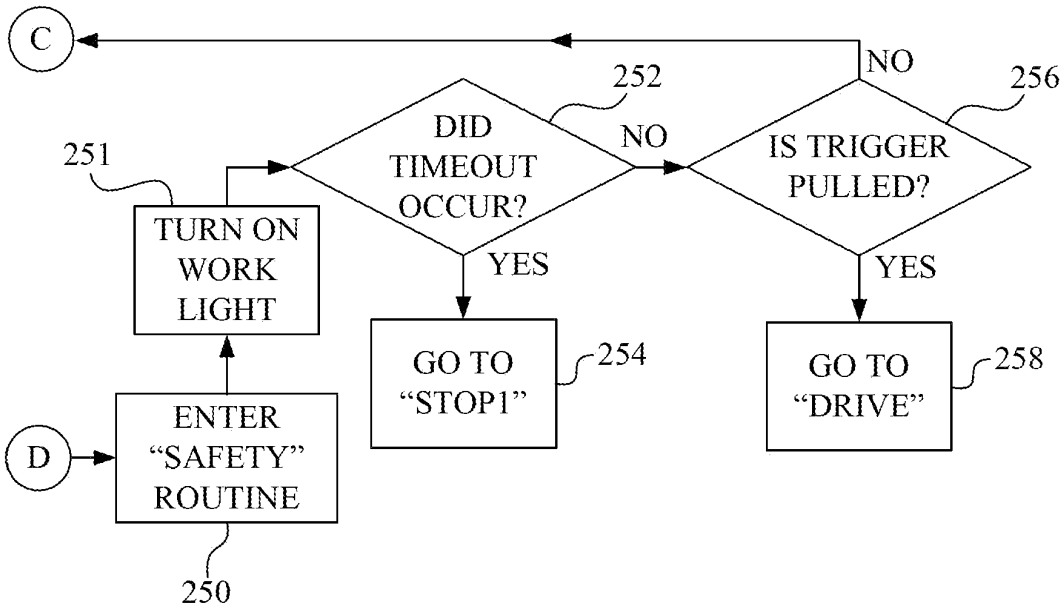
C
NO
252
256
DID TIMEOUT OCCUR?
NO
IS TRIGGER PULLED?
251
TURN ON WORK LIGHT
YES
YES
GO TO "STOP1"
254
GO TO "DRIVE"
258
D
ENTER "SAFETY" ROUTINE
250

Fig. 13B

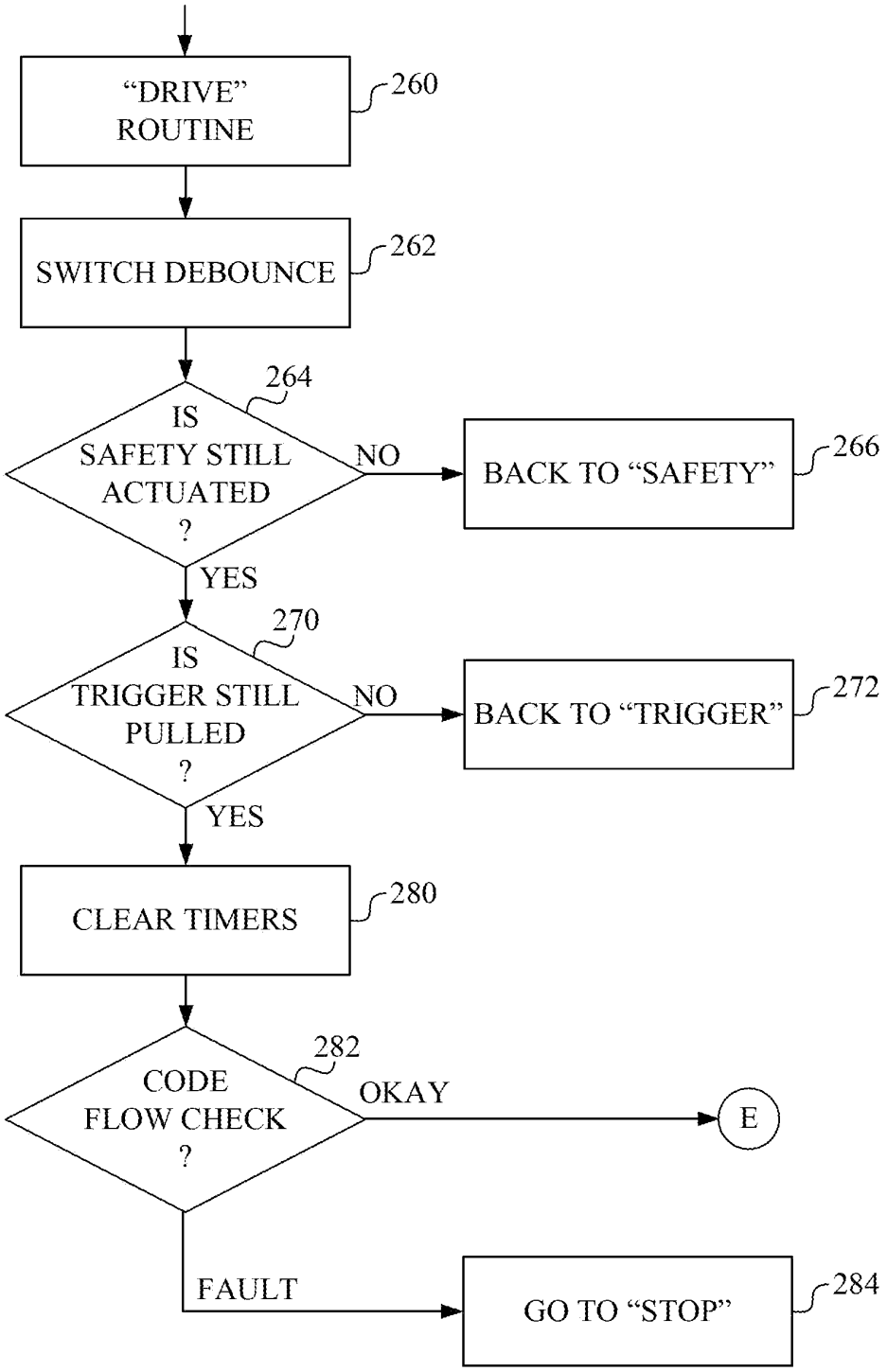
"DRIVE" ROUTINE
260
SWITCH DEBOUNCE
262
264
IS SAFETY STILL ACTUATED ?
NO
BACK TO "SAFETY"
266
YES
270
IS TRIGGER STILL PULLED ?
NO
BACK TO "TRIGGER"
272
YES
CLEAR TIMERS
280
282
CODE FLOW CHECK ?
OKAY
E
FAULT
GO TO "STOP"
284

Fig. 14A

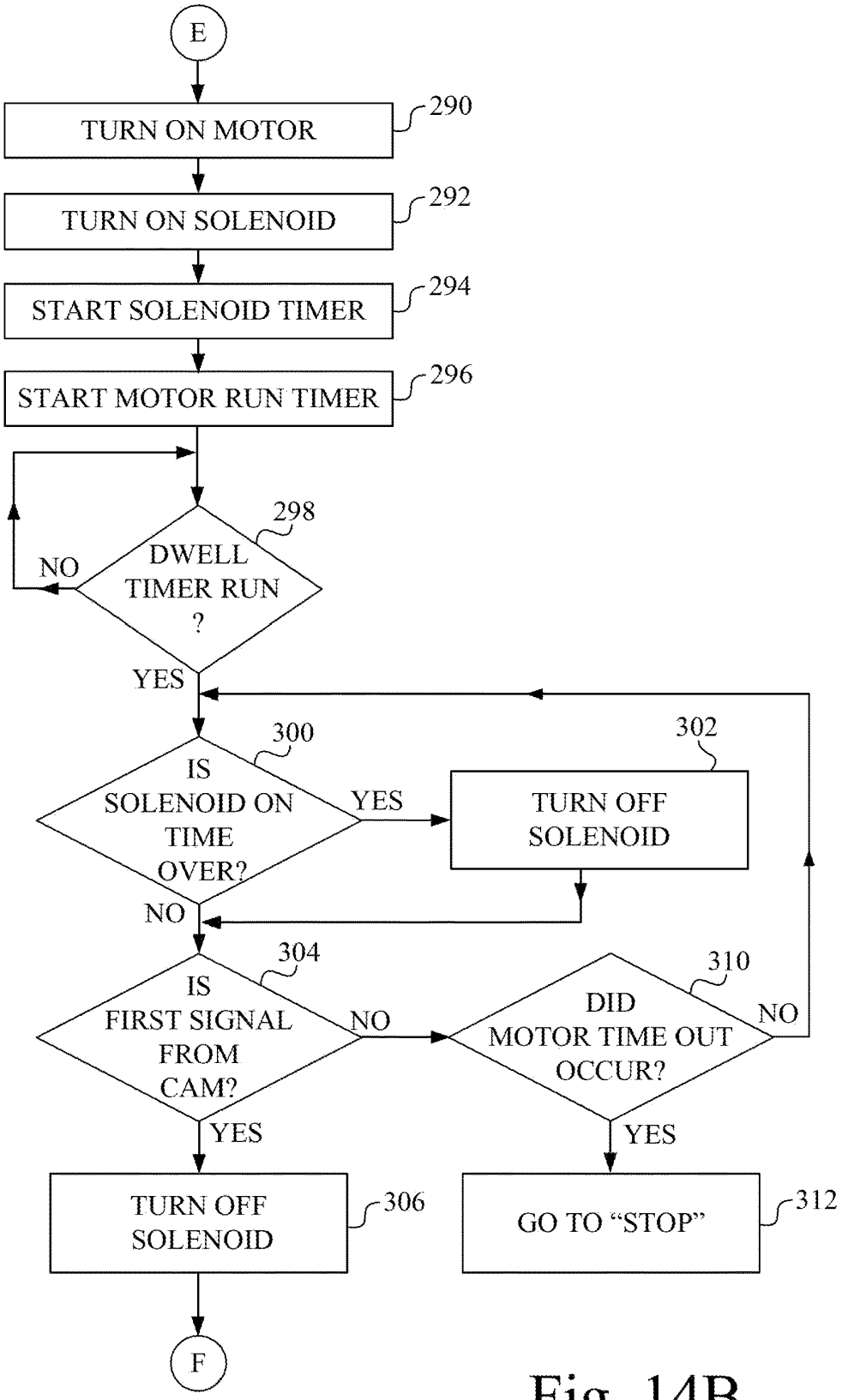
E
TURN ON MOTOR
290
TURN ON SOLENOID
292
START SOLENOID TIMER
294
START MOTOR RUN TIMER
296
298
DWELL TIMER RUN ?
NO
YES
300
IS SOLENOID ON TIME OVER?
YES
302
TURN OFF SOLENOID
NO
304
IS FIRST SIGNAL FROM CAM?
NO
310
DID MOTOR TIME OUT OCCUR?
NO
YES
YES
TURN OFF SOLENOID
306
GO TO "STOP"
312
F

Fig. 14B

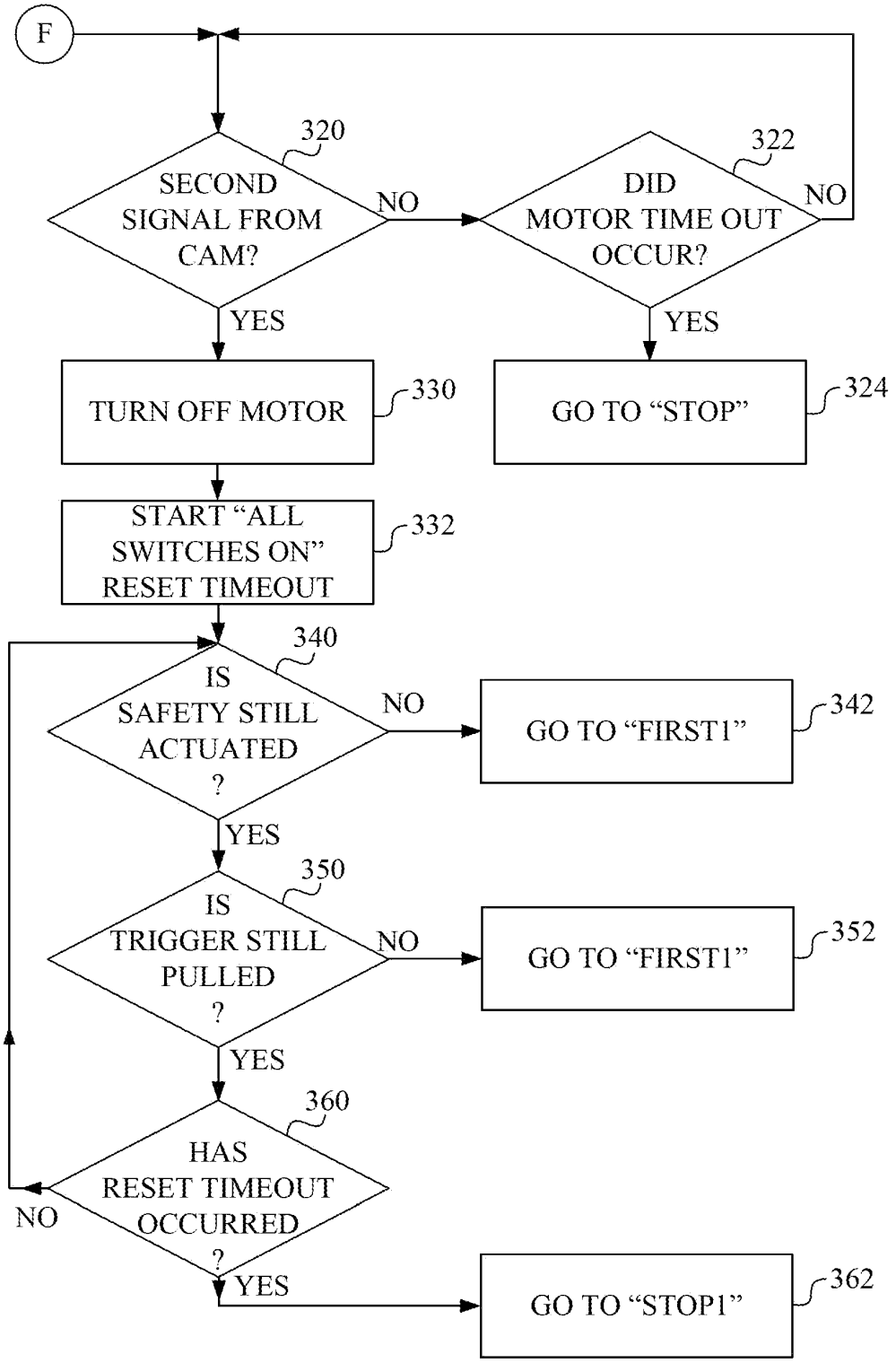
F
320
SECOND SIGNAL FROM CAM?
NO
322
DID MOTOR TIME OUT OCCUR?
NO
YES
YES
TURN OFF MOTOR
330
GO TO "STOP"
324
START "ALL SWITCHES ON" RESET TIMEOUT
332
340
IS SAFETY STILL ACTUATED ?
NO
GO TO "FIRST1"
342
YES
350
IS TRIGGER STILL PULLED ?
NO
GO TO "FIRST1"
352
YES
360
HAS RESET TIMEOUT OCCURRED ?
NO
YES
GO TO "STOP1"
362

Fig. 14C

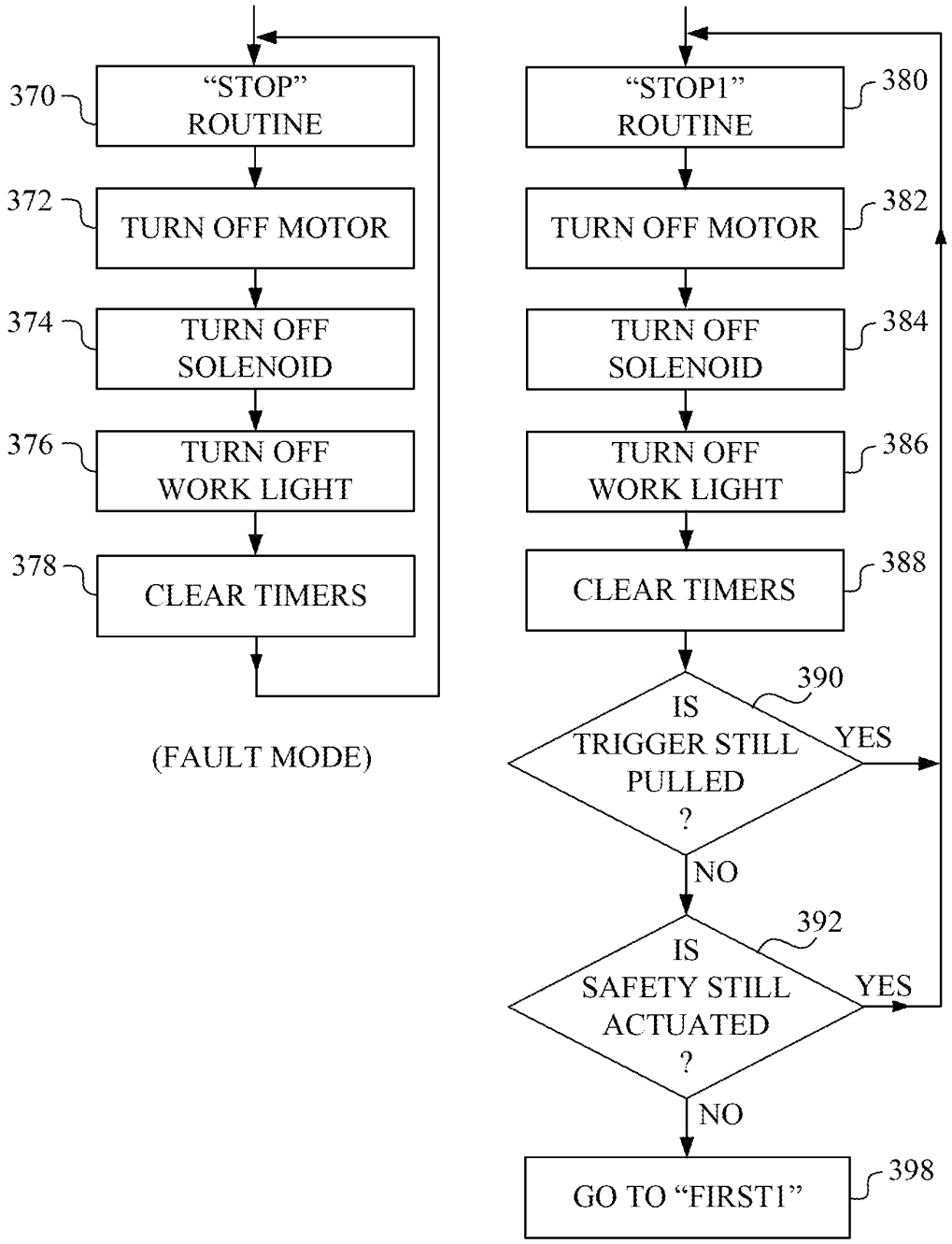
370
"STOP" ROUTINE
372
TURN OFF MOTOR
374
TURN OFF SOLENOID
376
TURN OFF WORK LIGHT
378
CLEAR TIMERS
(FAULT MODE)
"STOP1" ROUTINE
380
TURN OFF MOTOR
382
TURN OFF SOLENOID
384
TURN OFF WORK LIGHT
386
CLEAR TIMERS
388
IS TRIGGER STILL PULLED ?
390
YES
NO
IS SAFETY STILL ACTUATED ?
392
YES
NO
GO TO "FIRST1"
398

Fig. 15

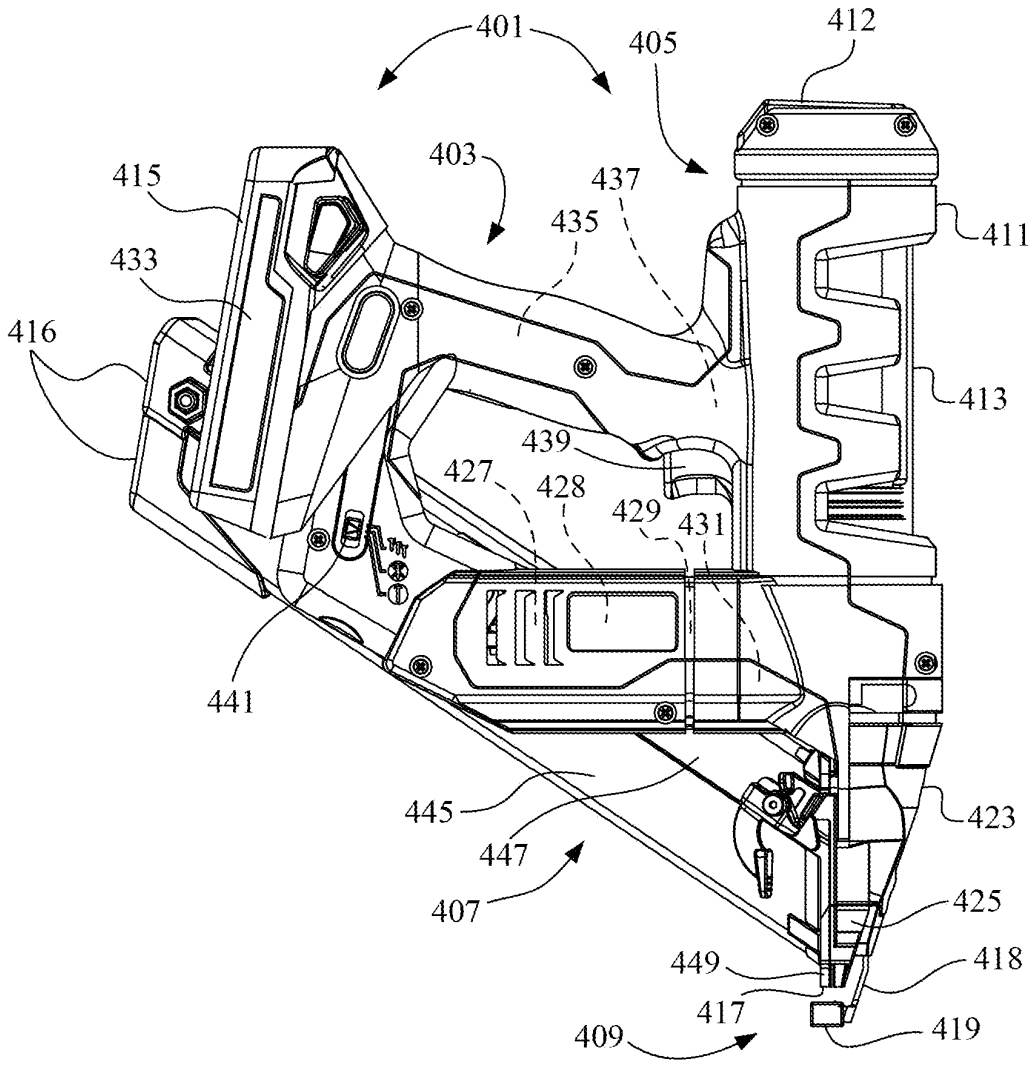
401
405
412
403
415
437
435
411
433
416
413
439
427
428
429
431
441
445
423
447
407
425
449
418
417
409
419

Fig. 16

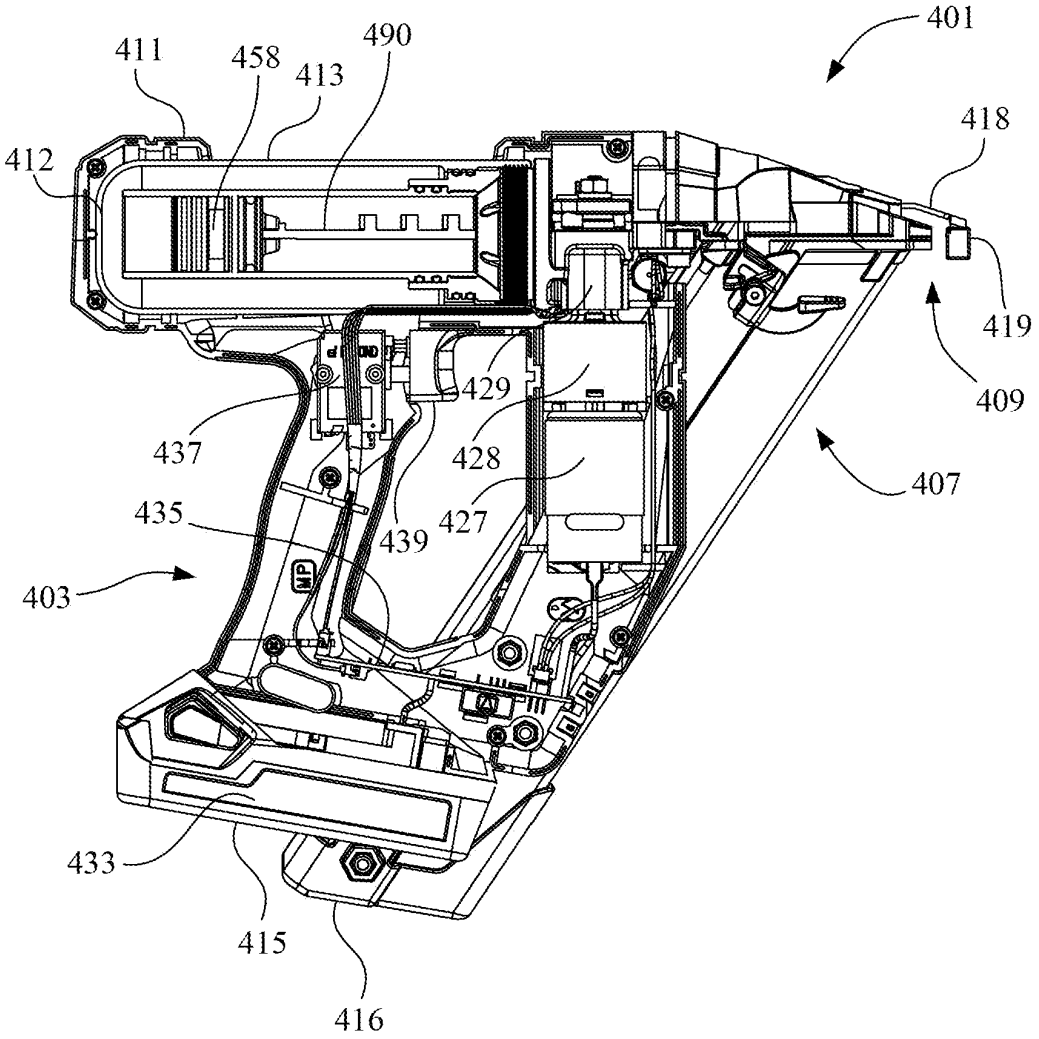
401
411
458
413
490
418
412
419
409
429
437
428
407
435
439
427
403
433
415
416

Fig. 17

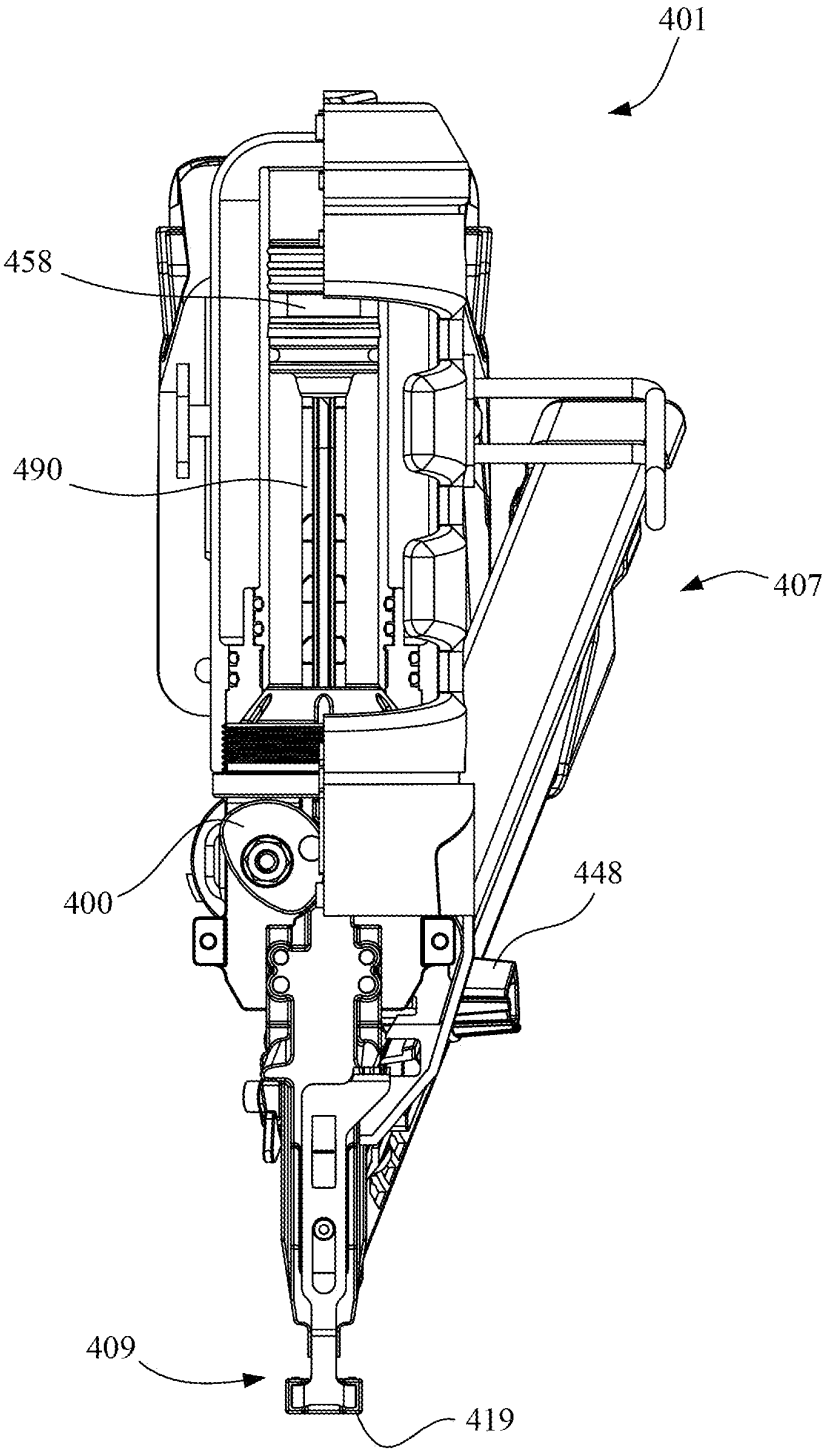

Fig. 18

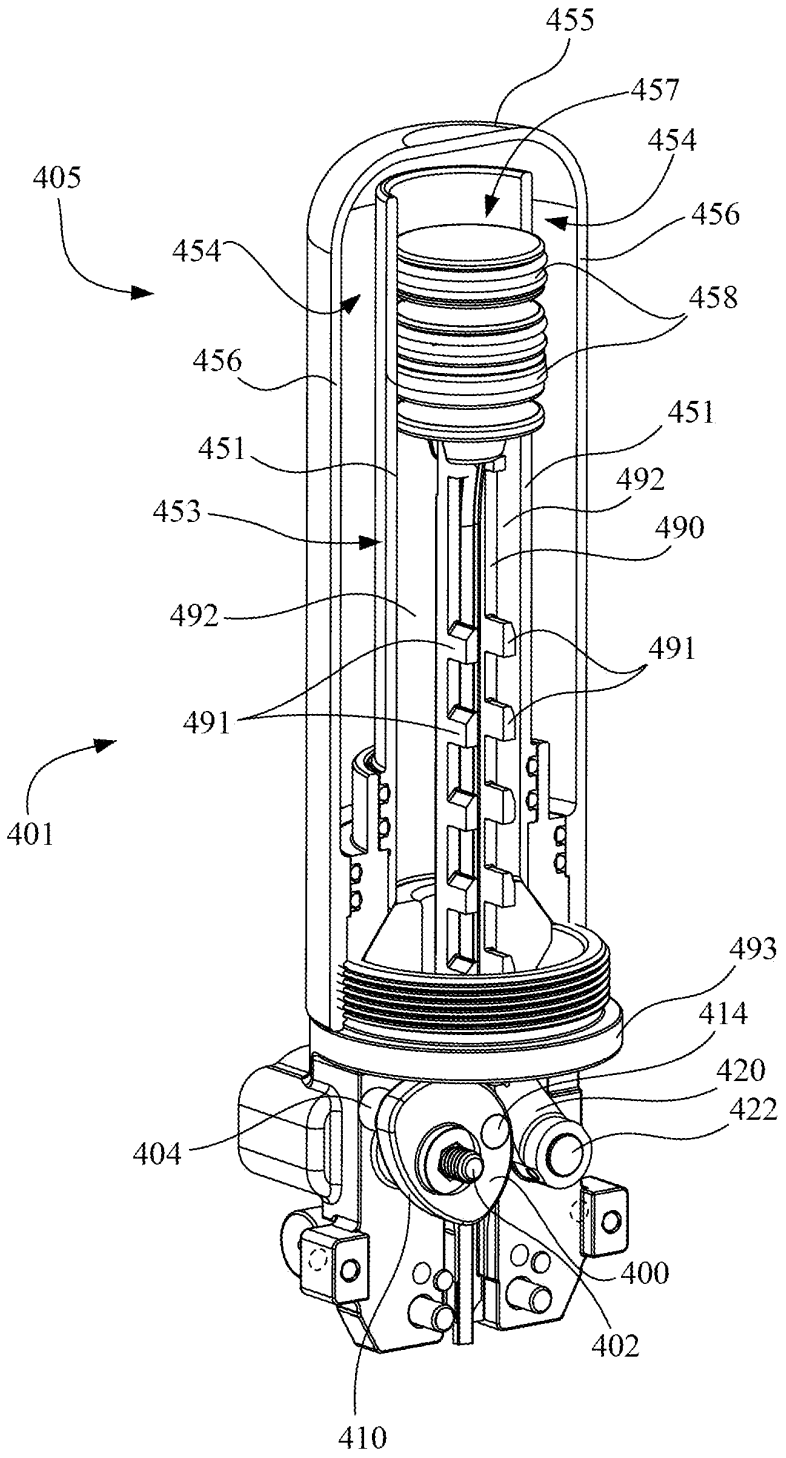
455
457
454
405
456
454
458
456
451
451
492
453
490
492
491
491
401
493
414
420
422
404
400
402
410

Fig. 19

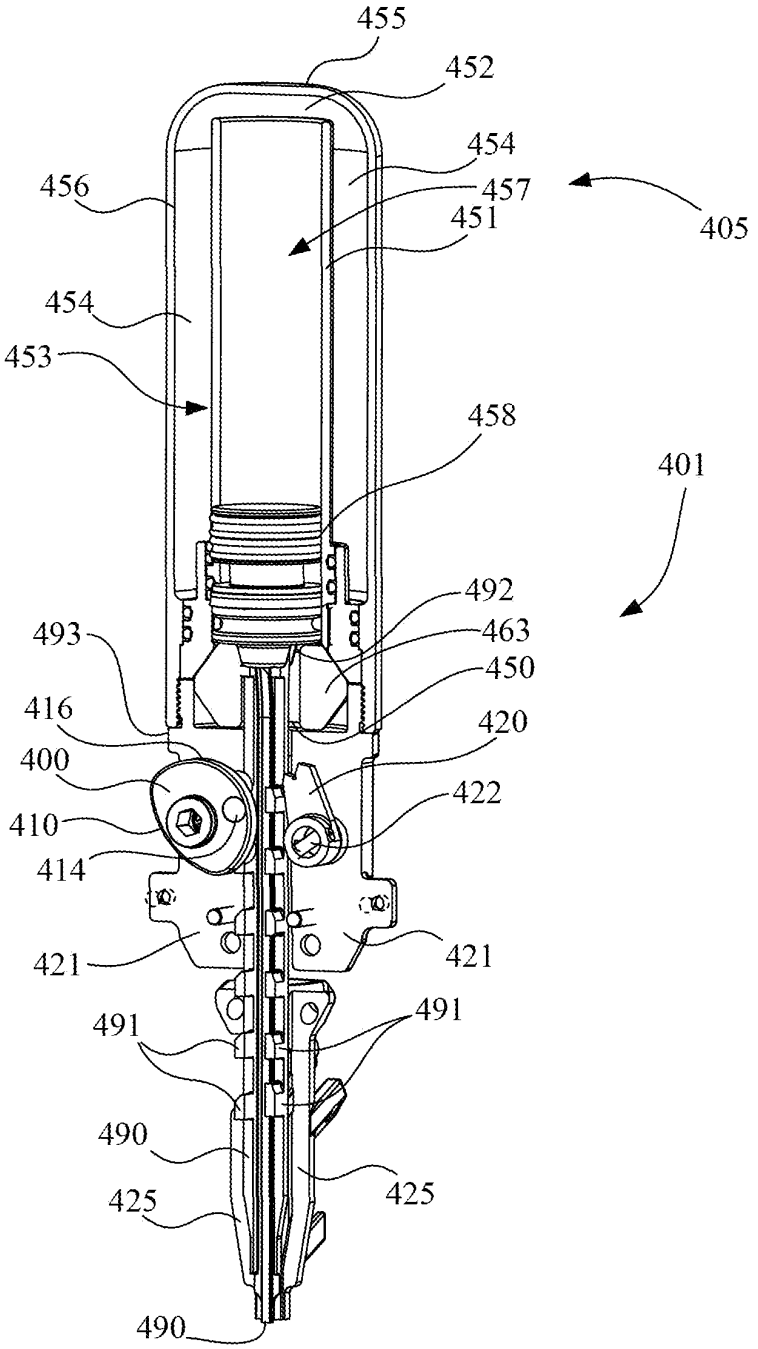
455
452
454
456
457
451
405
454
453
458
401
492
493
463
450
416
420
400
422
410
414
421
421
491
491
490
425
425
490

Fig. 20

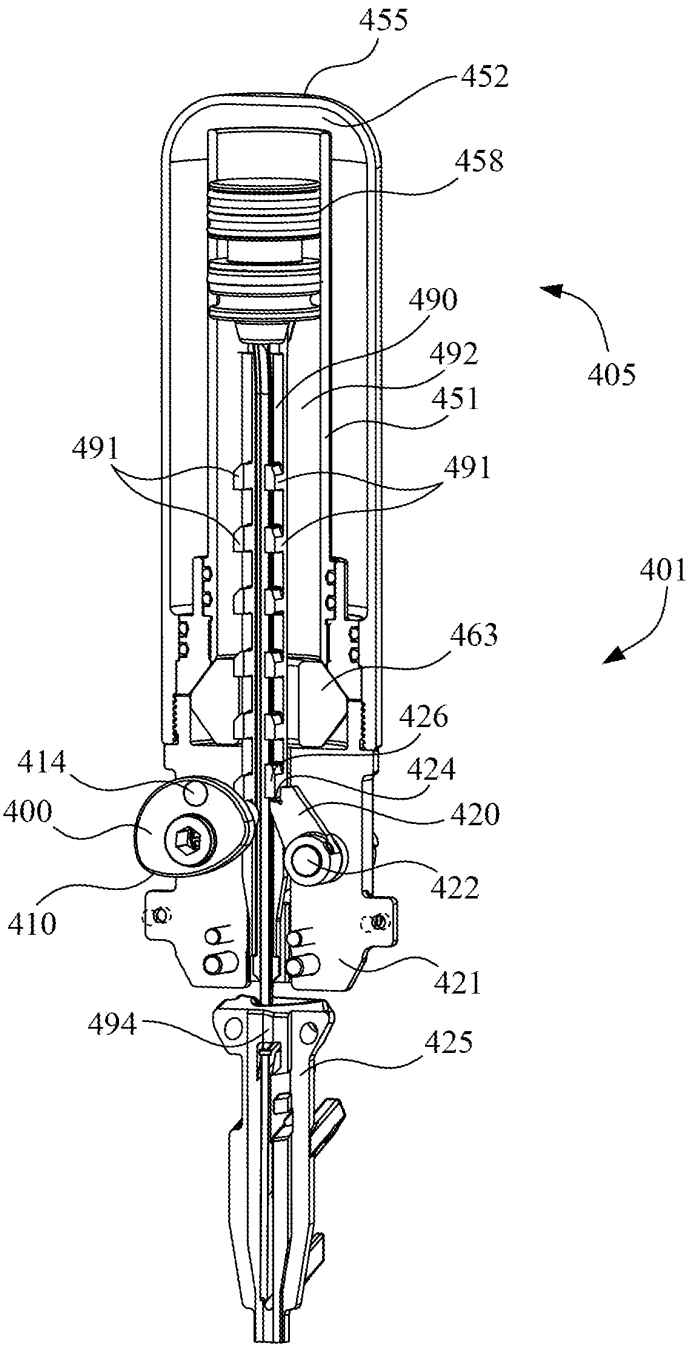
455
452
458
490
492
451
405
491
491
401
463
426
414
424
400
420
422
410
421
494
425

Fig. 21

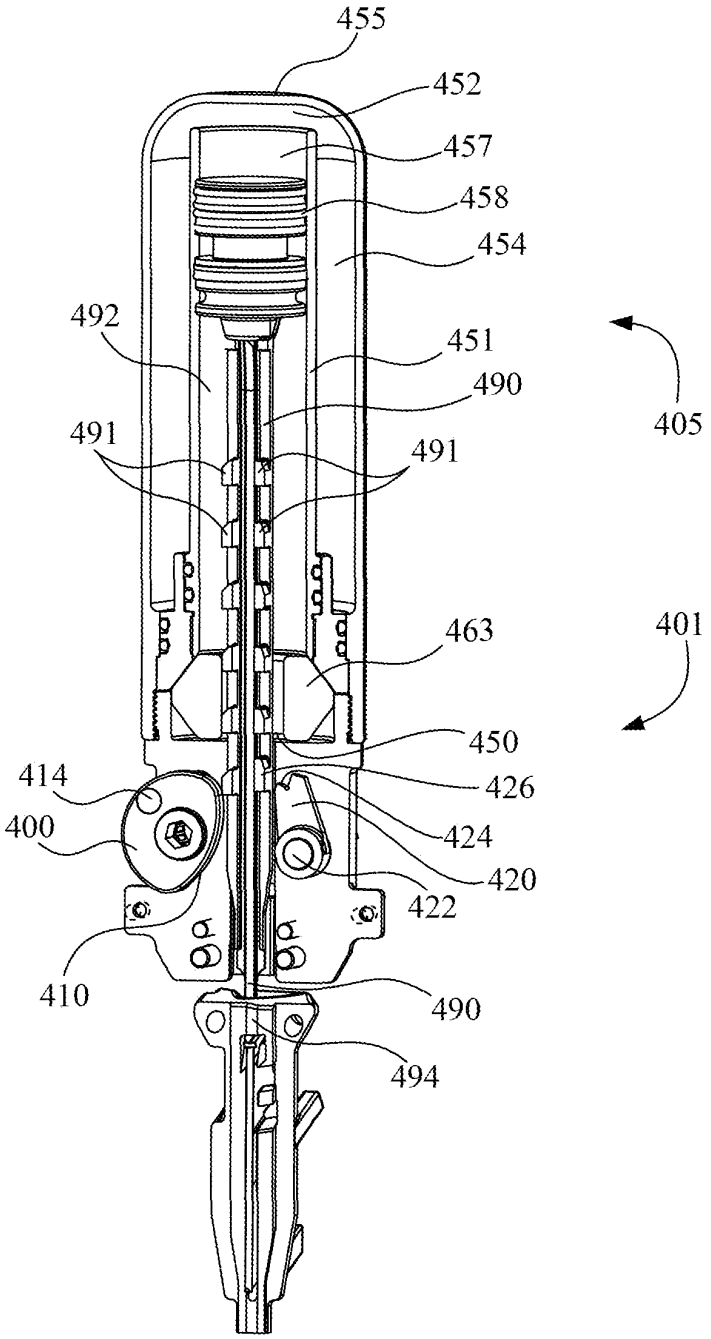
455
452
457
458
454
492
451
490
405
491
491
463
401
450
414
426
400
424
420
422
410
490
494

Fig. 22

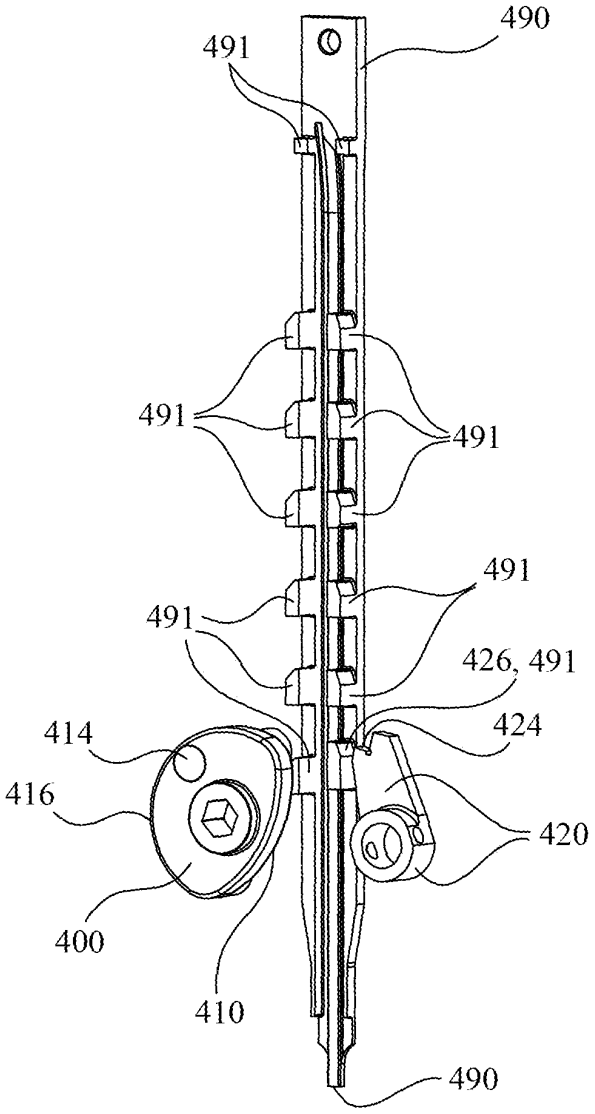

Fig. 23

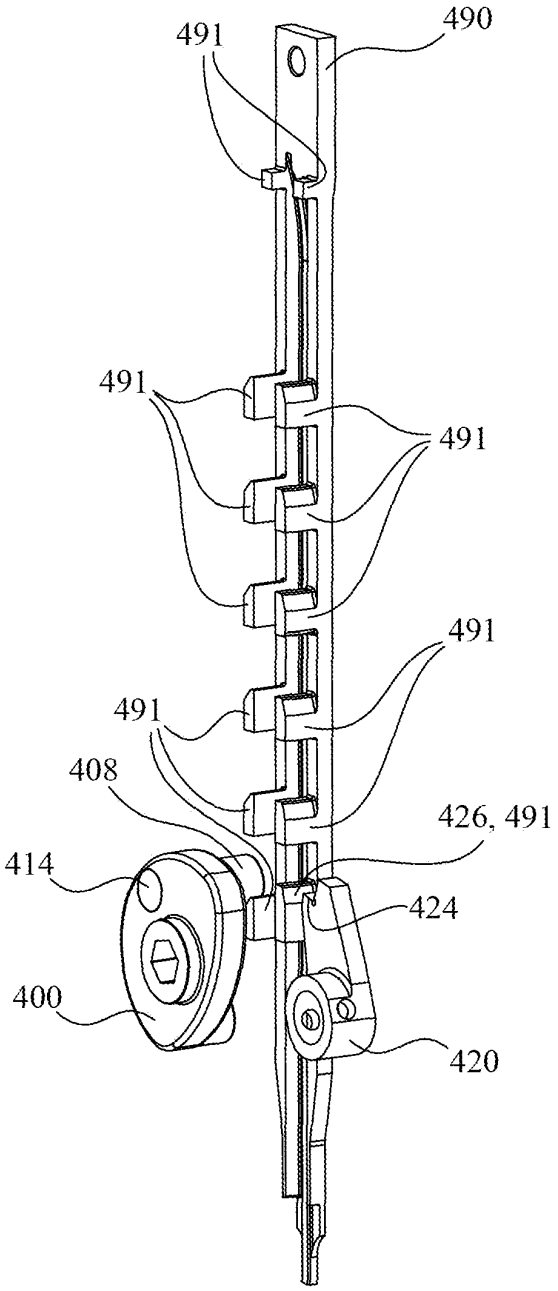

Fig. 24

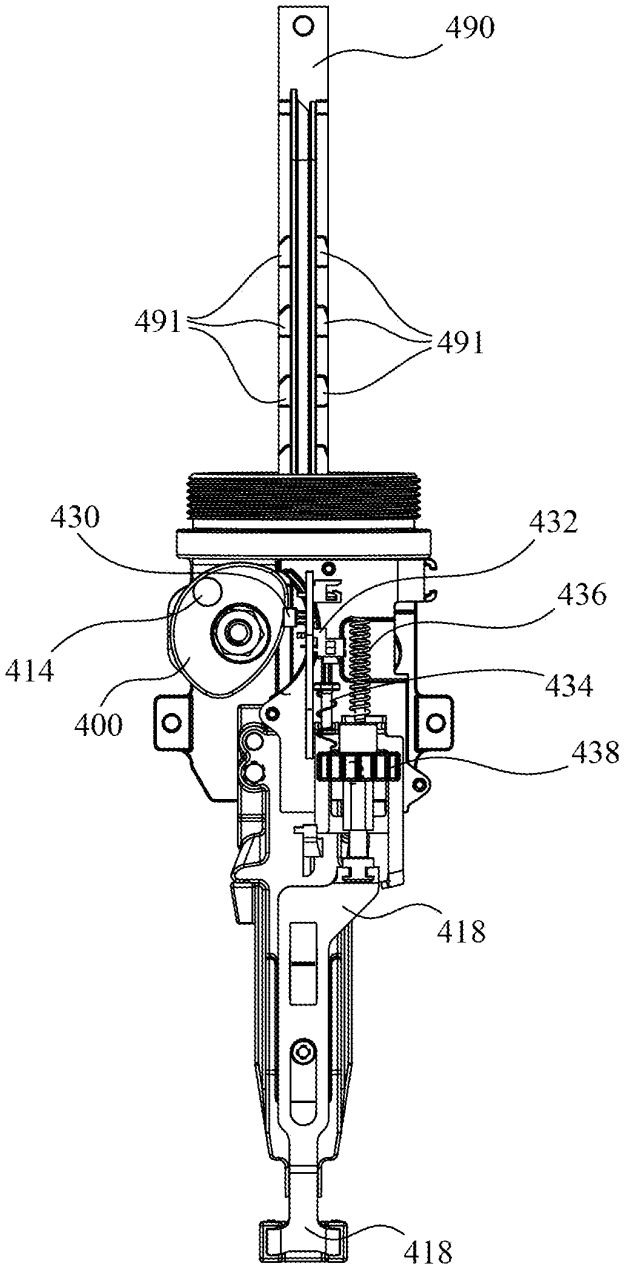

Fig. 25

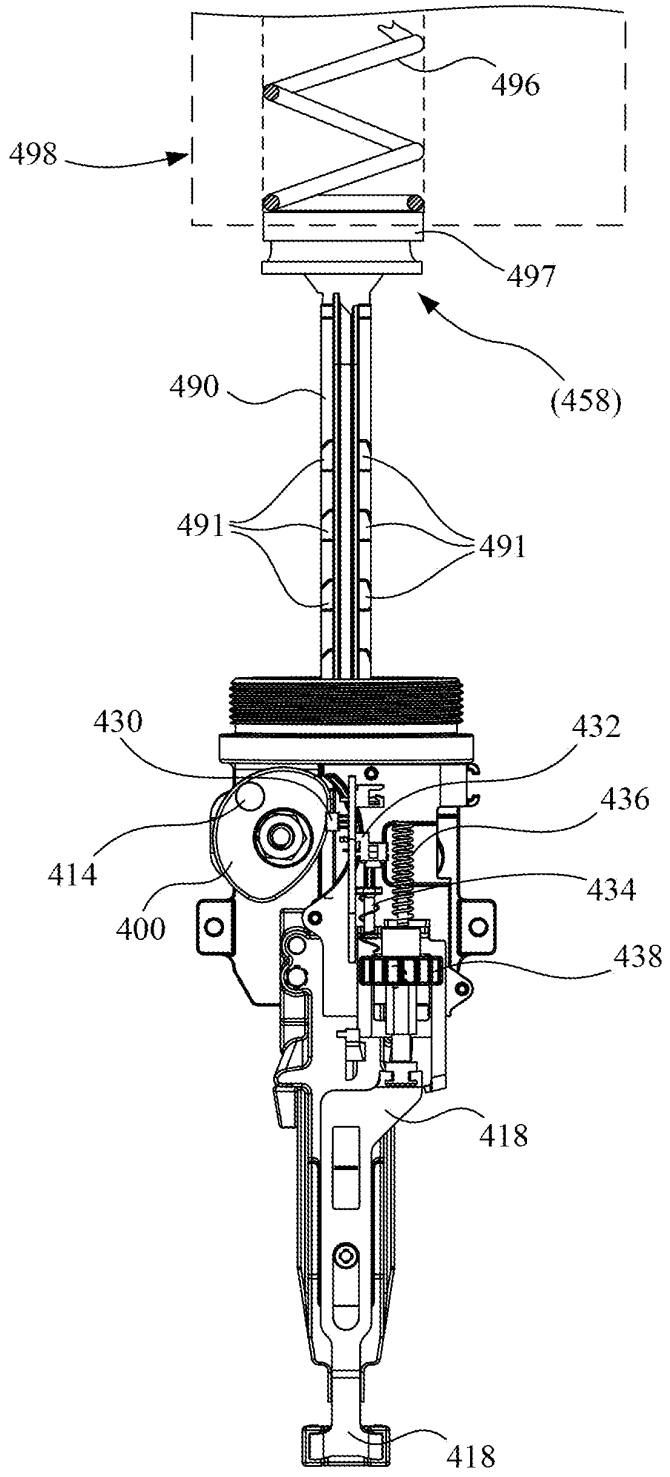

Fig. 26

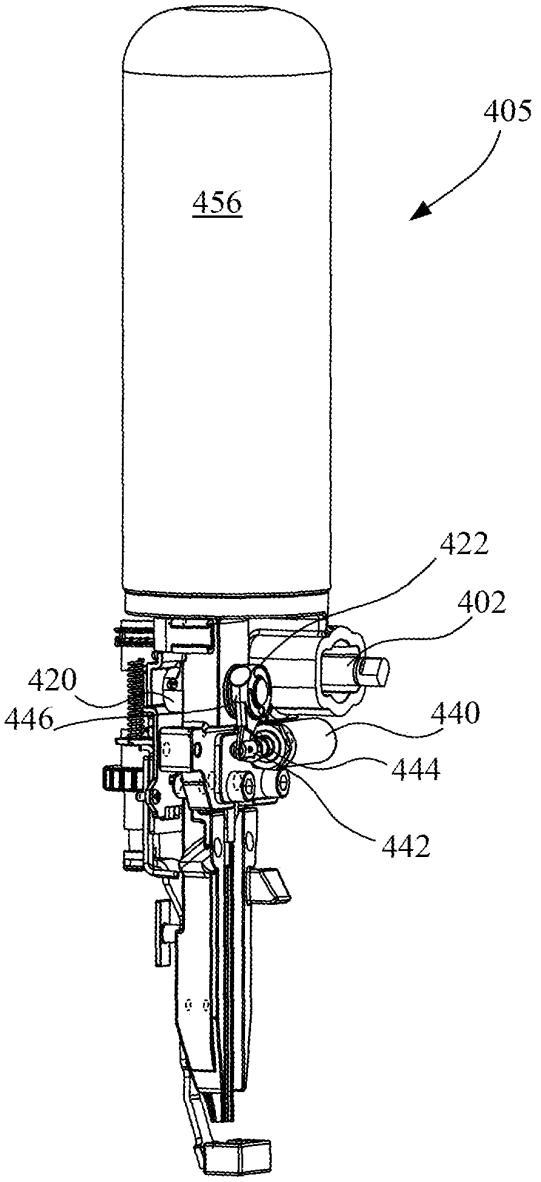

Fig. 27

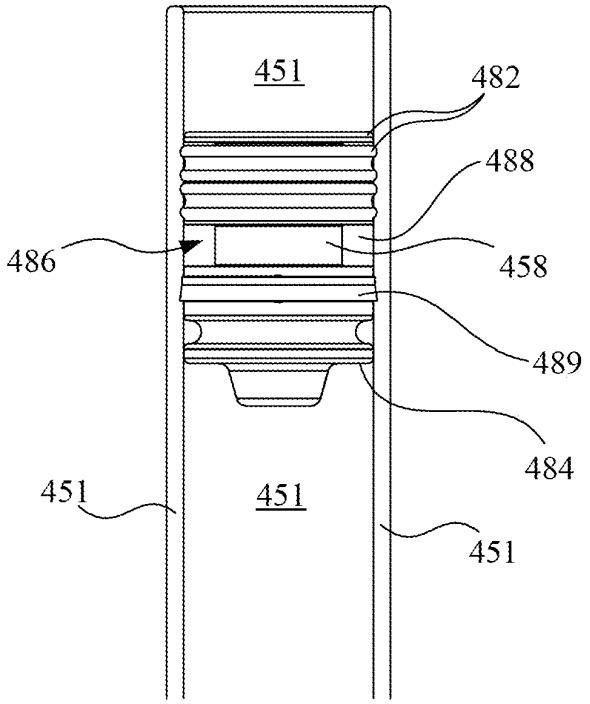

Fig. 28

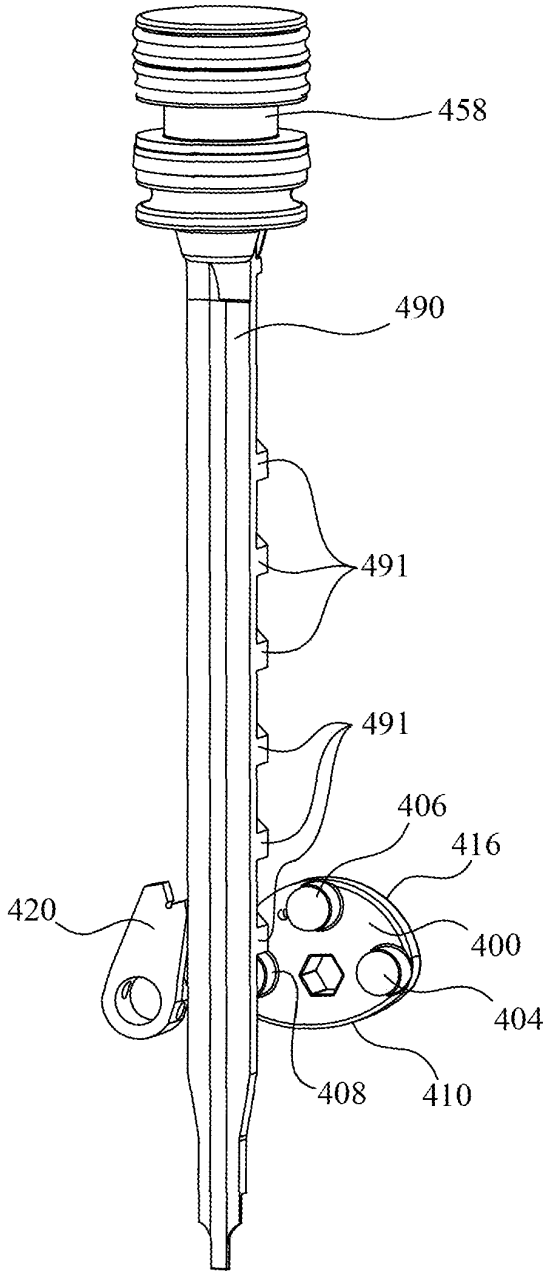

Fig. 29

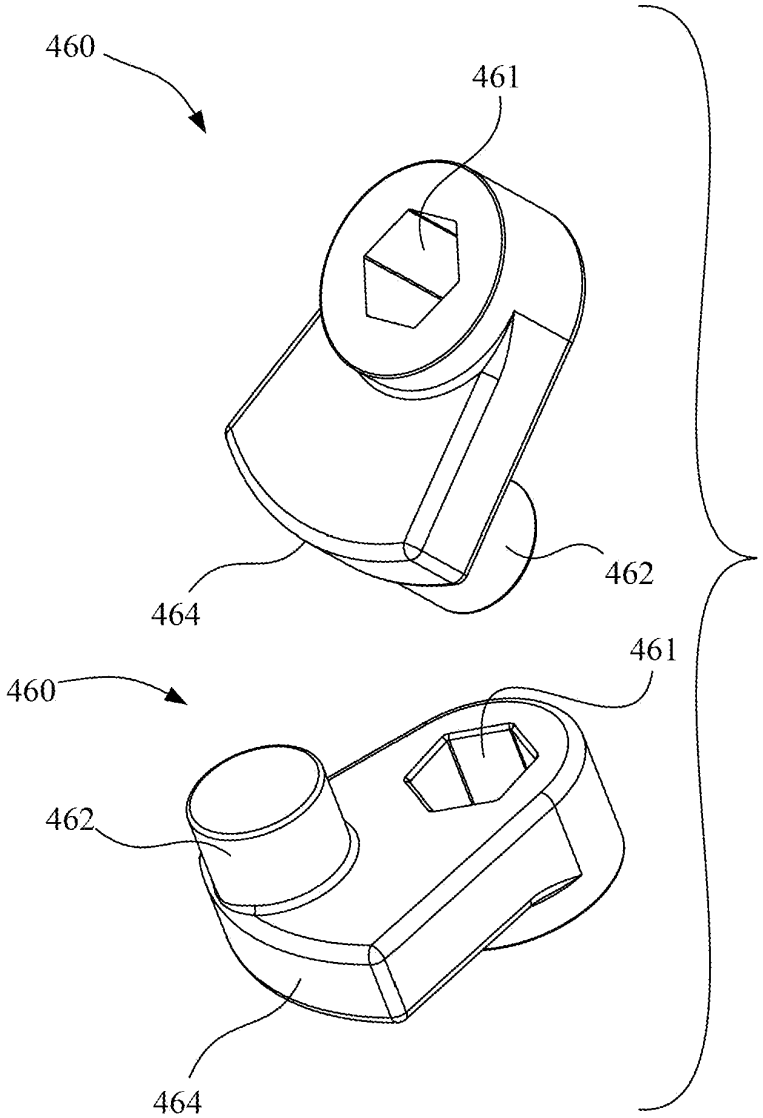

Fig. 30

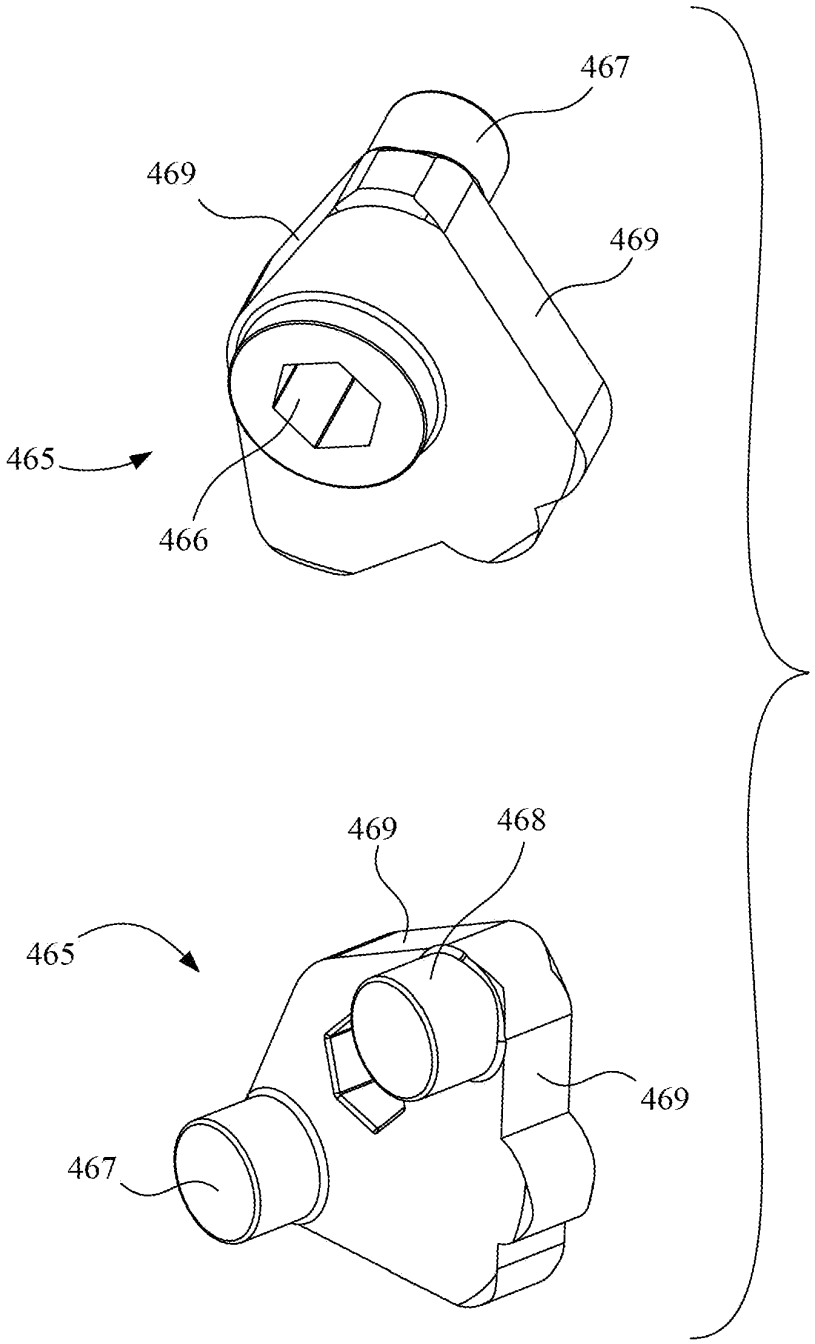

Fig. 31

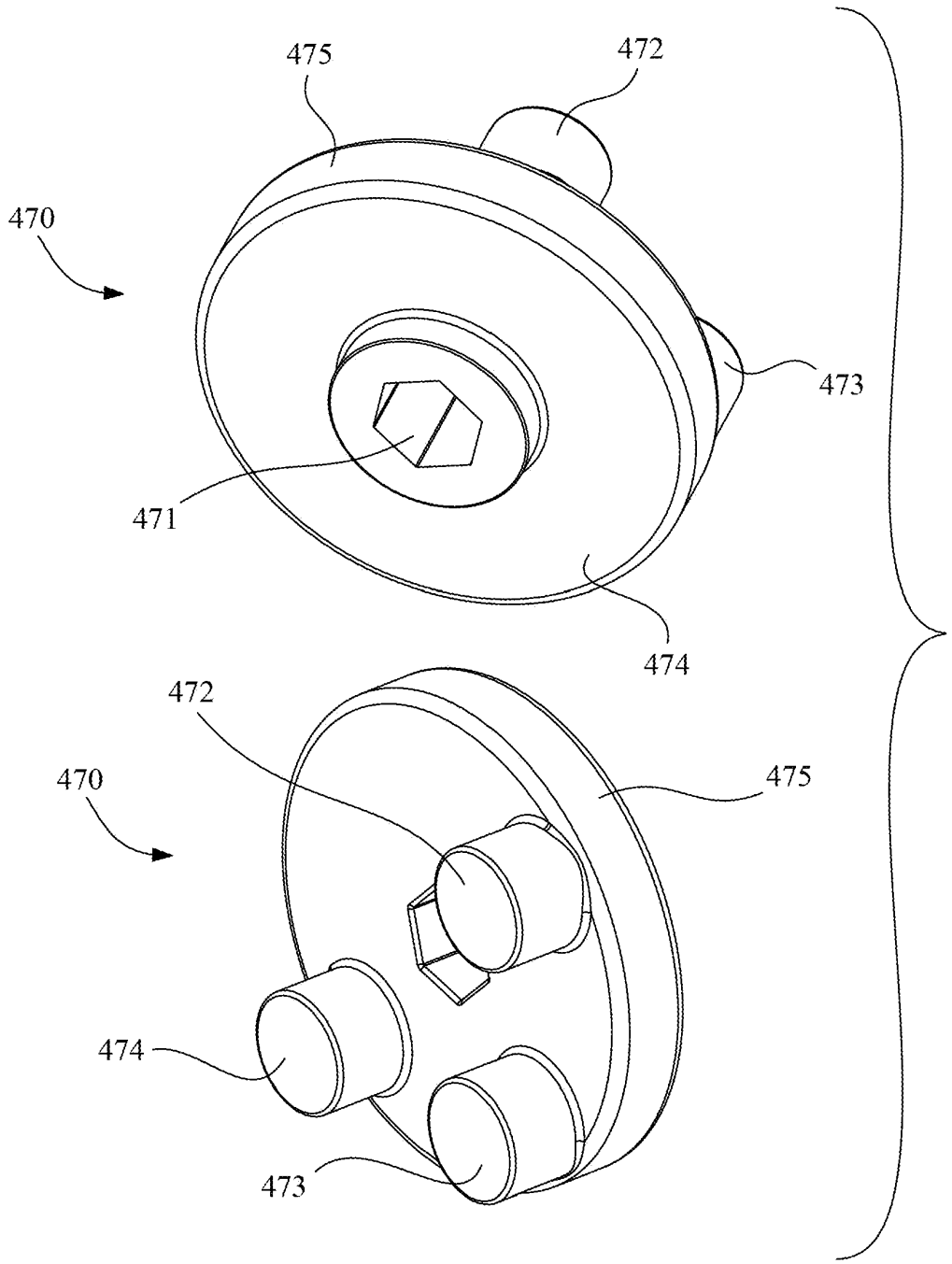

Fig. 32

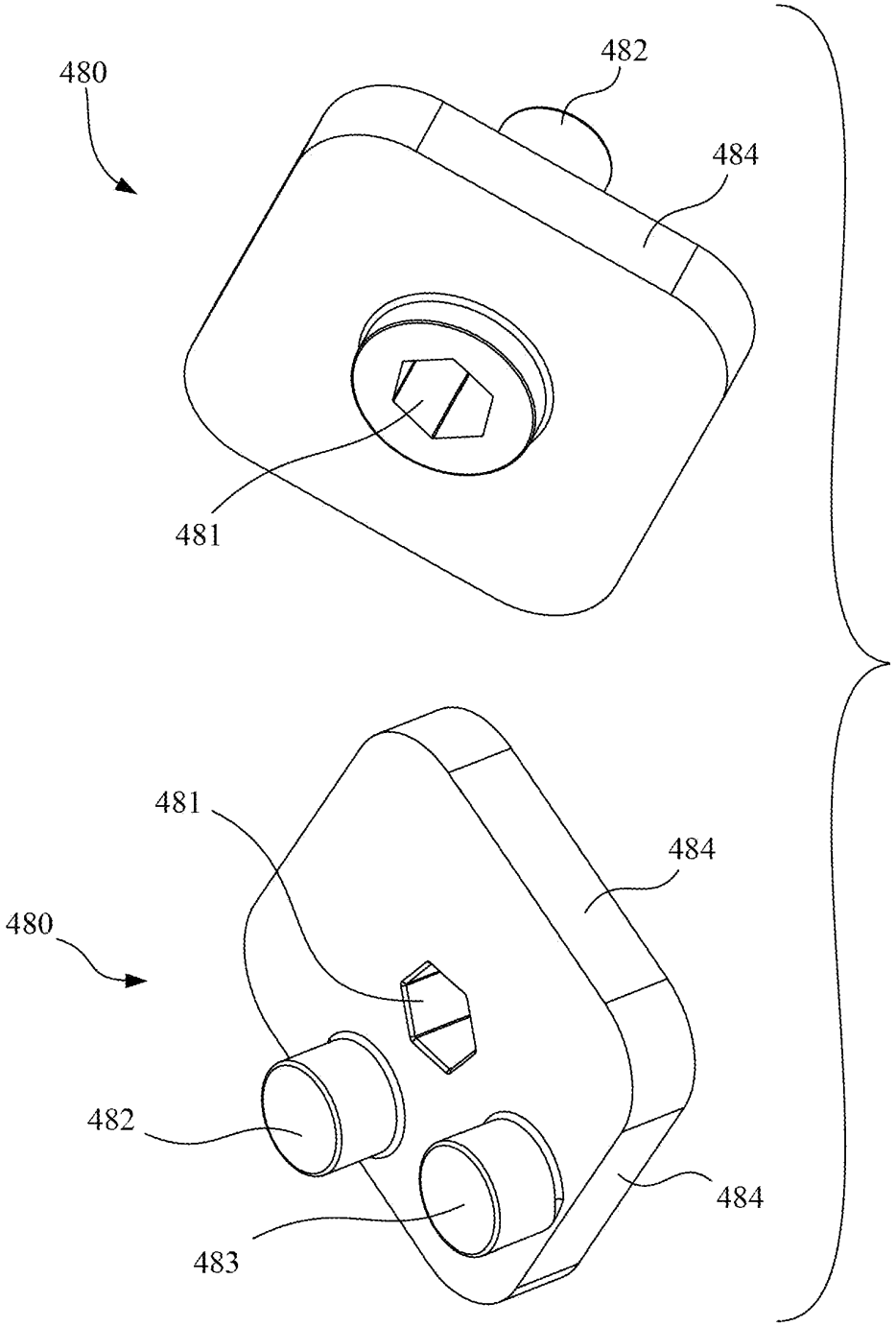

Fig. 33

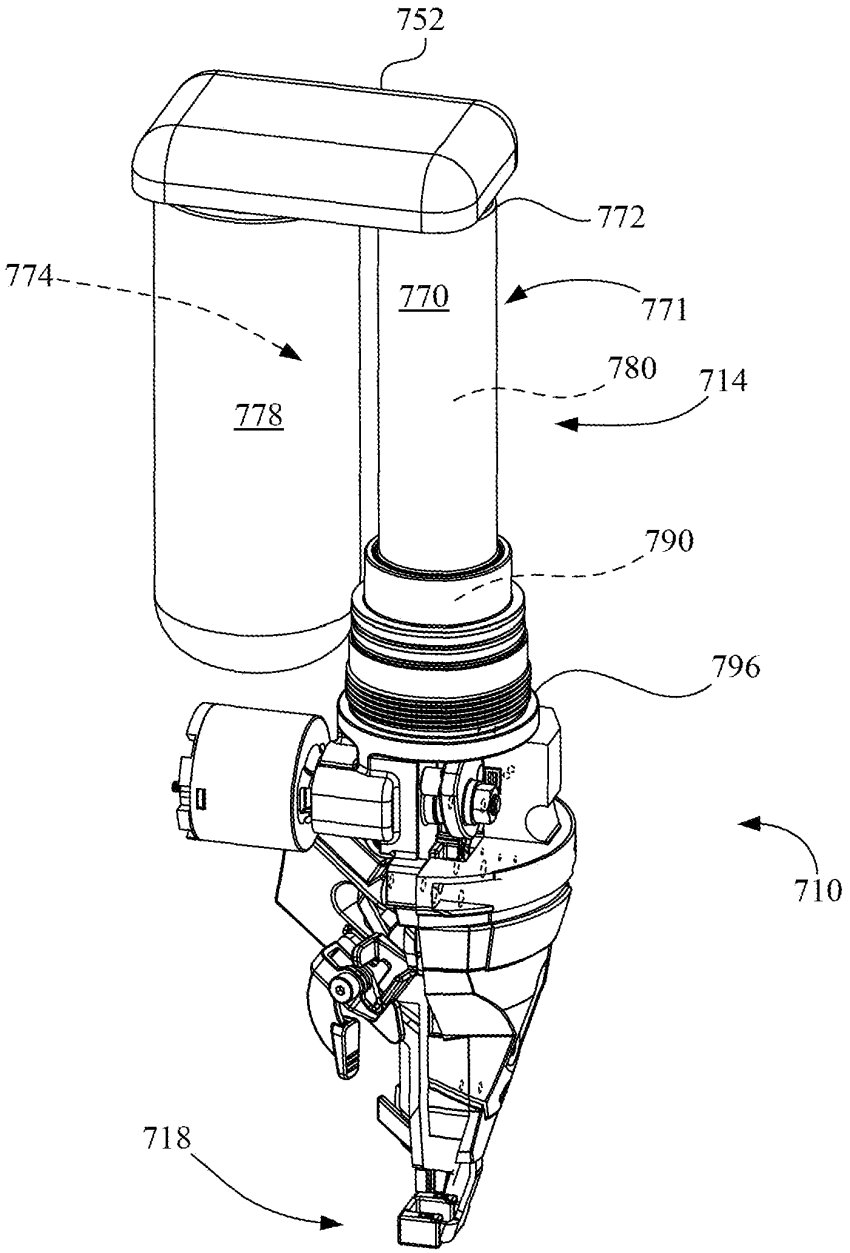

Fig. 34

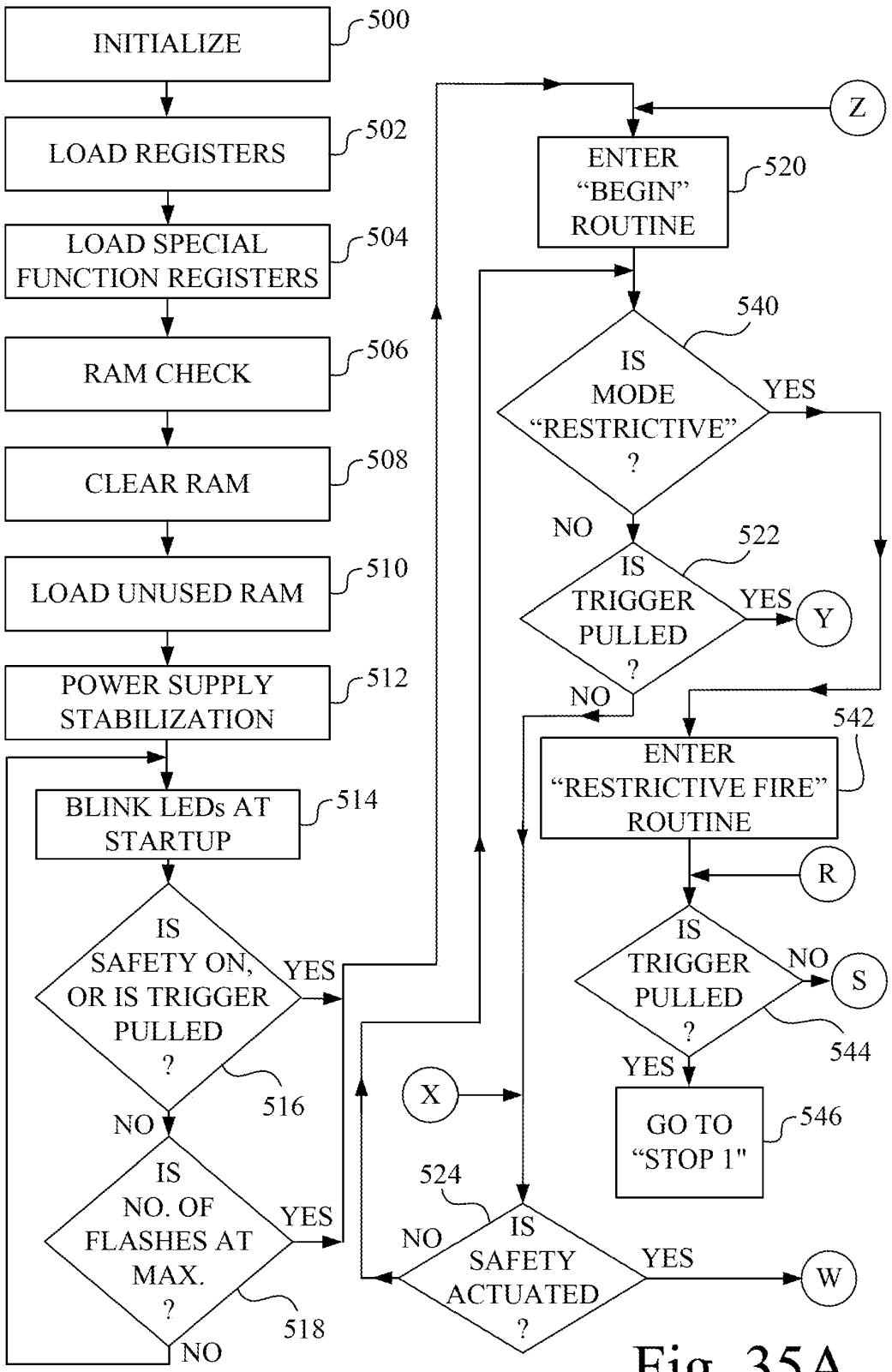
INITIALIZE
500
LOAD REGISTERS
502
LOAD SPECIAL FUNCTION REGISTERS
504
RAM CHECK
506
CLEAR RAM
508
LOAD UNUSED RAM
510
POWER SUPPLY STABILIZATION
512
BLINK LEDs AT STARTUP
514
IS SAFETY ON, OR IS TRIGGER PULLED ?
YES
516
NO
IS NO. OF FLASHES AT MAX. ?
YES
518
NO
Z
ENTER "BEGIN" ROUTINE
520
540
IS MODE "RESTRICTIVE" ?
YES
NO
522
IS TRIGGER PULLED ?
YES
Y
NO
542
ENTER "RESTRICTIVE FIRE" ROUTINE
R
IS TRIGGER PULLED ?
NO
S
544
YES
GO TO "STOP 1"
546
X
524
IS SAFETY ACTUATED ?
NO
YES
W

Fig. 35A

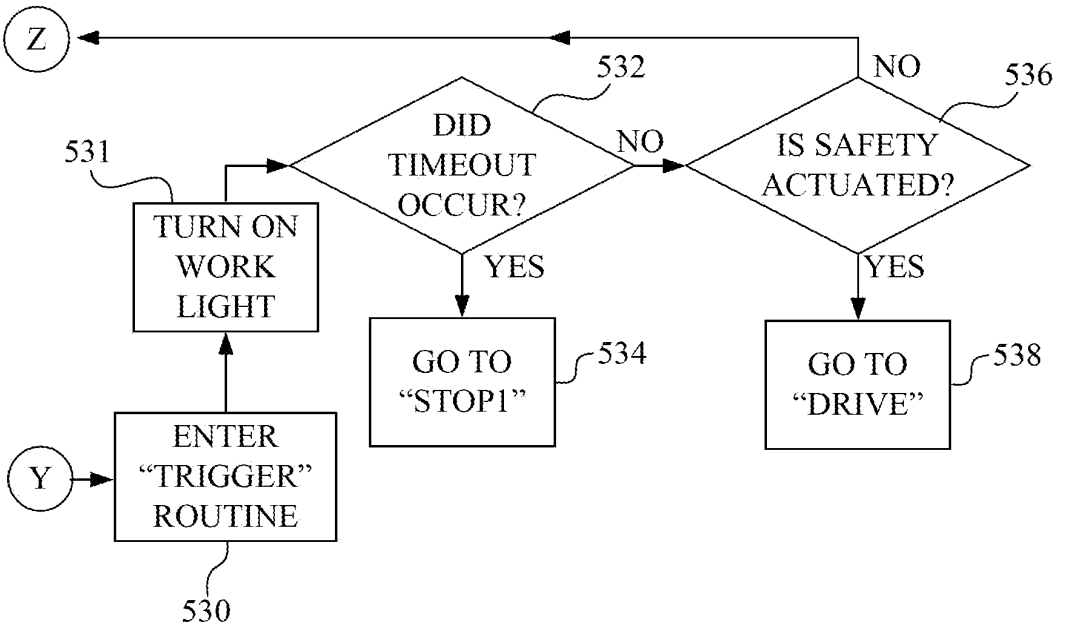
Z
NO
532
536
DID TIMEOUT OCCUR?
NO
IS SAFETY ACTUATED?
531
TURN ON WORK LIGHT
YES
YES
GO TO "STOP1"
534
GO TO "DRIVE"
538
Y
ENTER "TRIGGER" ROUTINE
530

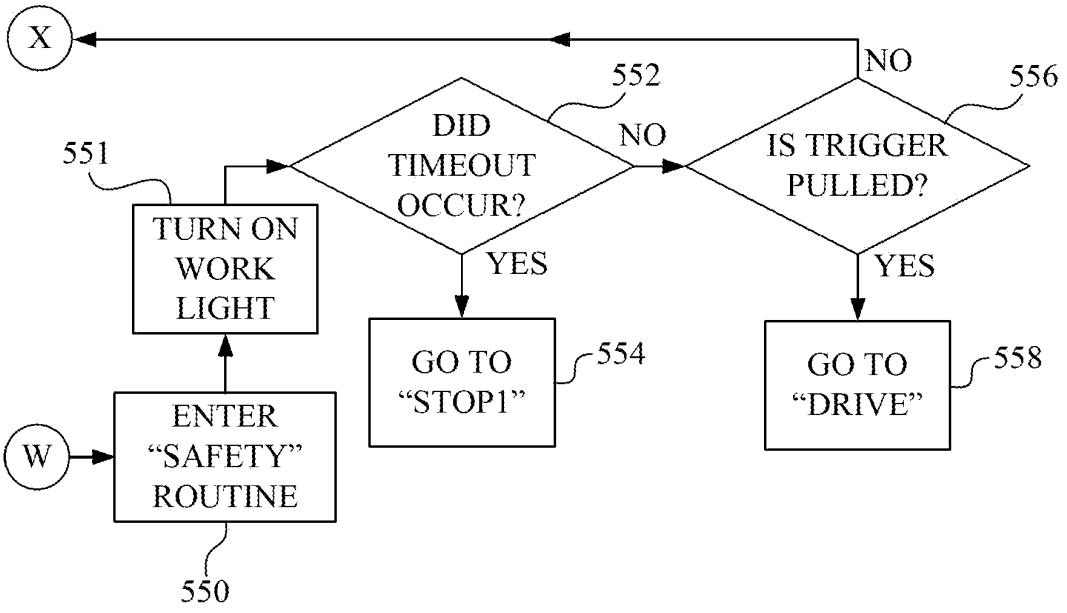
X
NO
552
556
DID TIMEOUT OCCUR?
NO
IS TRIGGER PULLED?
551
TURN ON WORK LIGHT
YES
YES
GO TO "STOP1"
554
GO TO "DRIVE"
558
W
ENTER "SAFETY" ROUTINE
550

Fig. 35B

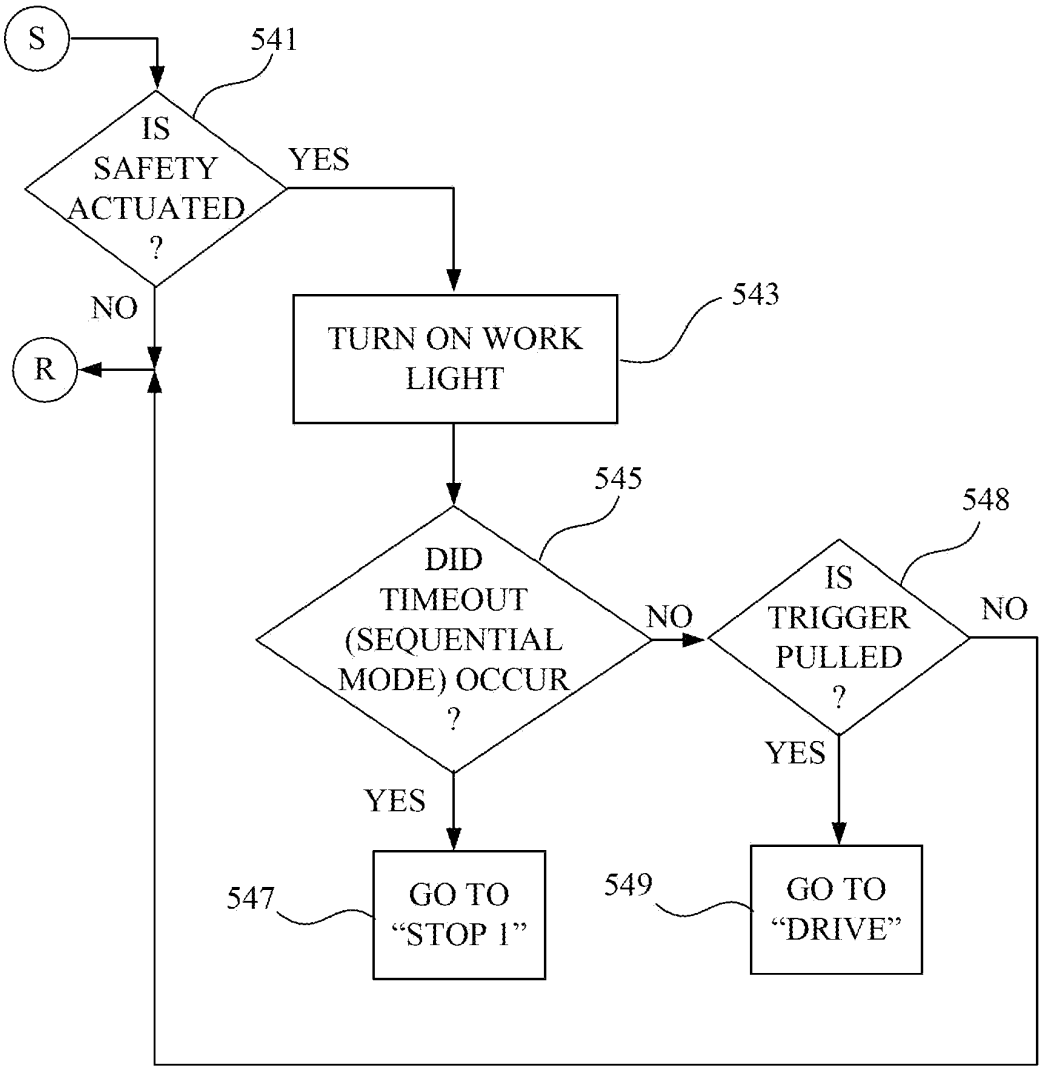
S
541
IS SAFETY ACTUATED ?
YES
NO
R
TURN ON WORK LIGHT
543
545
DID TIMEOUT (SEQUENTIAL MODE) OCCUR ?
NO
548
IS TRIGGER PULLED ?
NO
YES
YES
547
GO TO "STOP 1"
549
GO TO "DRIVE"

Fig. 35C

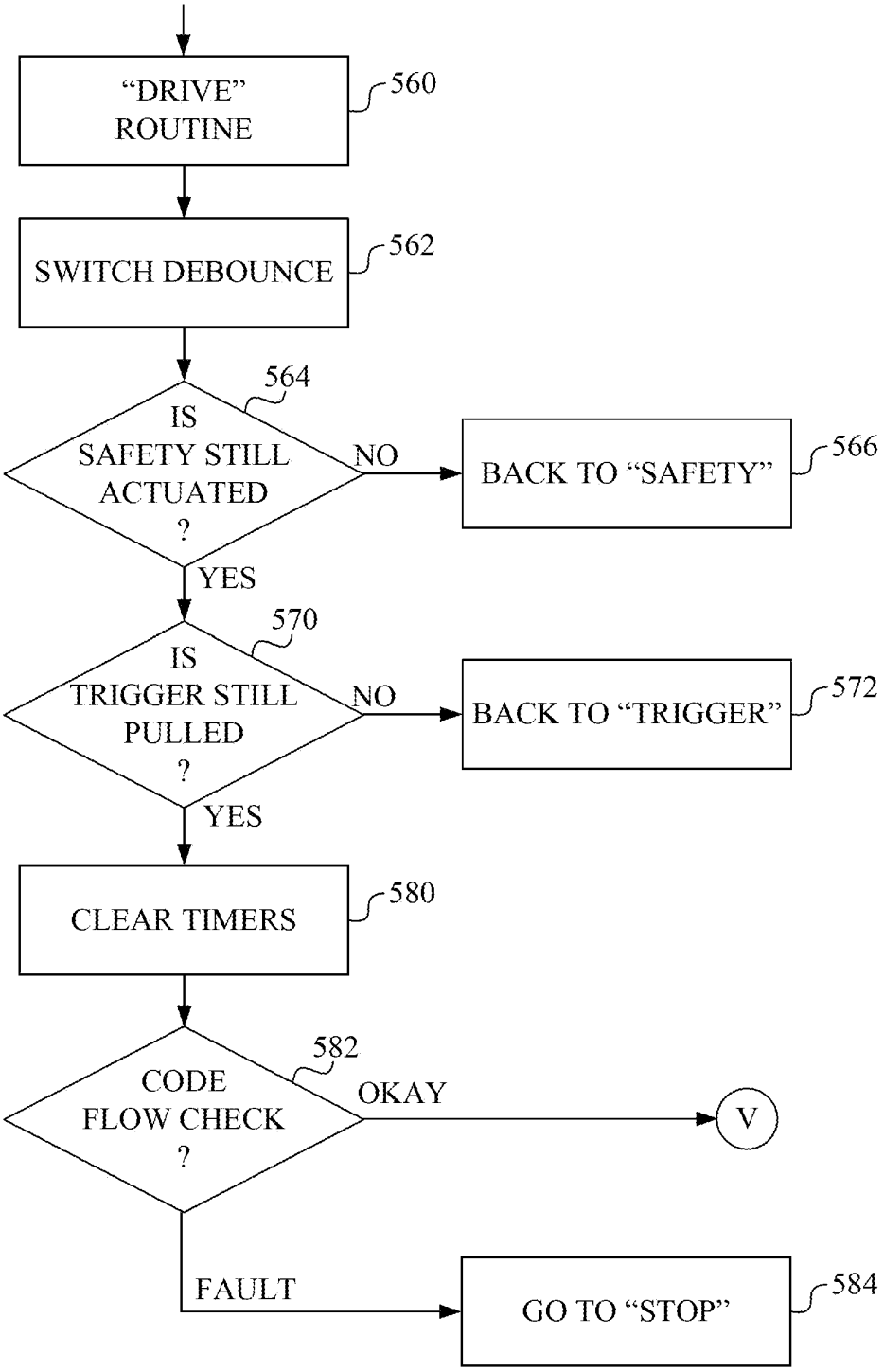
"DRIVE" ROUTINE
560
SWITCH DEBOUNCE
562
564
IS SAFETY STILL ACTUATED ?
NO
BACK TO "SAFETY"
566
YES
570
IS TRIGGER STILL PULLED ?
NO
BACK TO "TRIGGER"
572
YES
CLEAR TIMERS
580
582
CODE FLOW CHECK ?
OKAY
V
FAULT
GO TO "STOP"
584

Fig. 36A

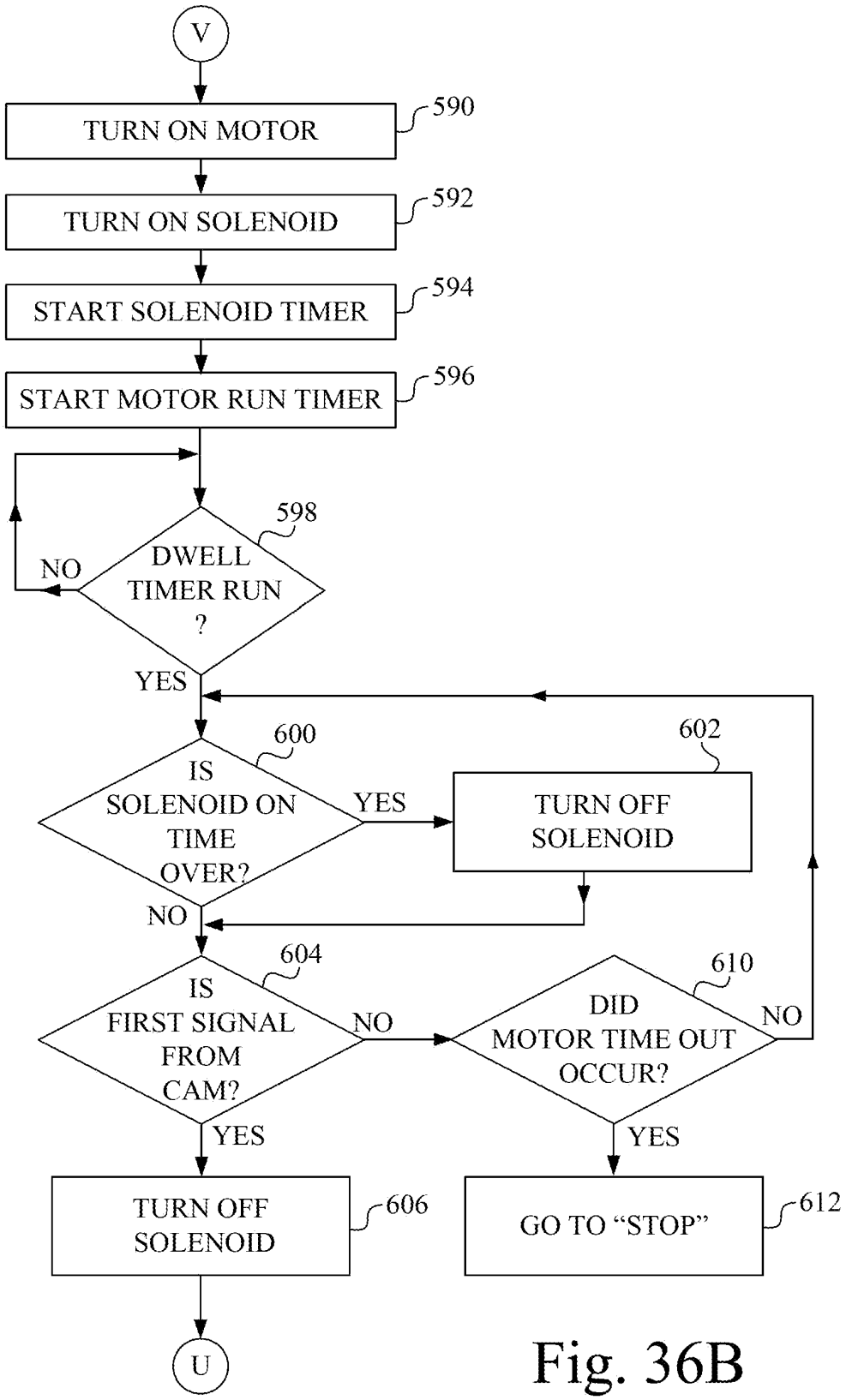
V
TURN ON MOTOR
590
TURN ON SOLENOID
592
START SOLENOID TIMER
594
START MOTOR RUN TIMER
596
598
DWELL TIMER RUN ?
NO
YES
600
IS SOLENOID ON TIME OVER?
YES
602
TURN OFF SOLENOID
NO
604
IS FIRST SIGNAL FROM CAM?
NO
610
DID MOTOR TIME OUT OCCUR?
NO
YES
YES
TURN OFF SOLENOID
606
GO TO "STOP"
612
U

Fig. 36B

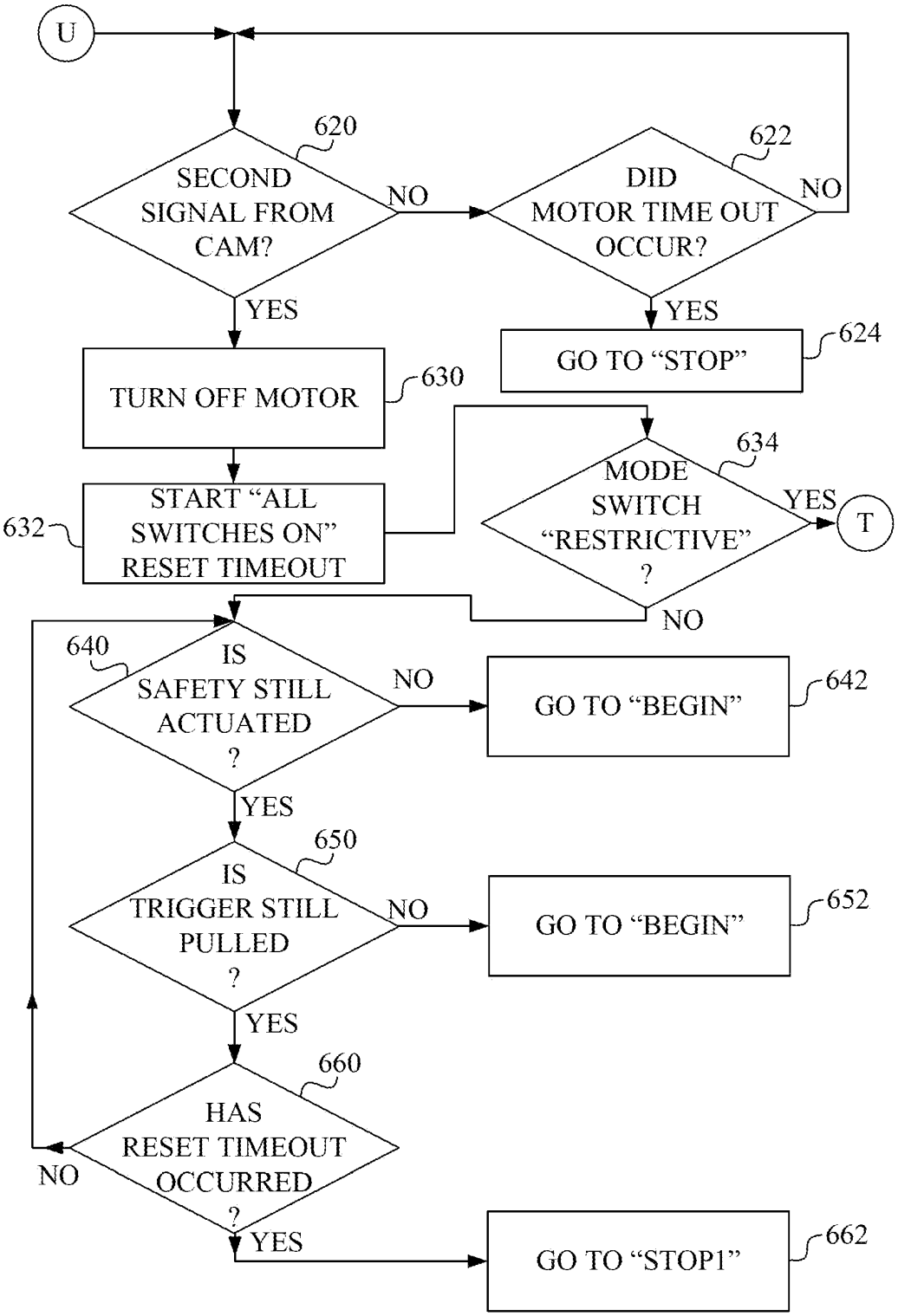
U
620
SECOND SIGNAL FROM CAM?
NO
YES
622
DID MOTOR TIME OUT OCCUR?
NO
YES
624
GO TO "STOP"
630
TURN OFF MOTOR
632
START "ALL SWITCHES ON" RESET TIMEOUT
634
MODE SWITCH "RESTRICTIVE" ?
YES
T
NO
640
IS SAFETY STILL ACTUATED ?
NO
642
GO TO "BEGIN"
YES
650
IS TRIGGER STILL PULLED ?
NO
652
GO TO "BEGIN"
YES
660
HAS RESET TIMEOUT OCCURRED ?
NO
YES
662
GO TO "STOP1"

Fig. 36C

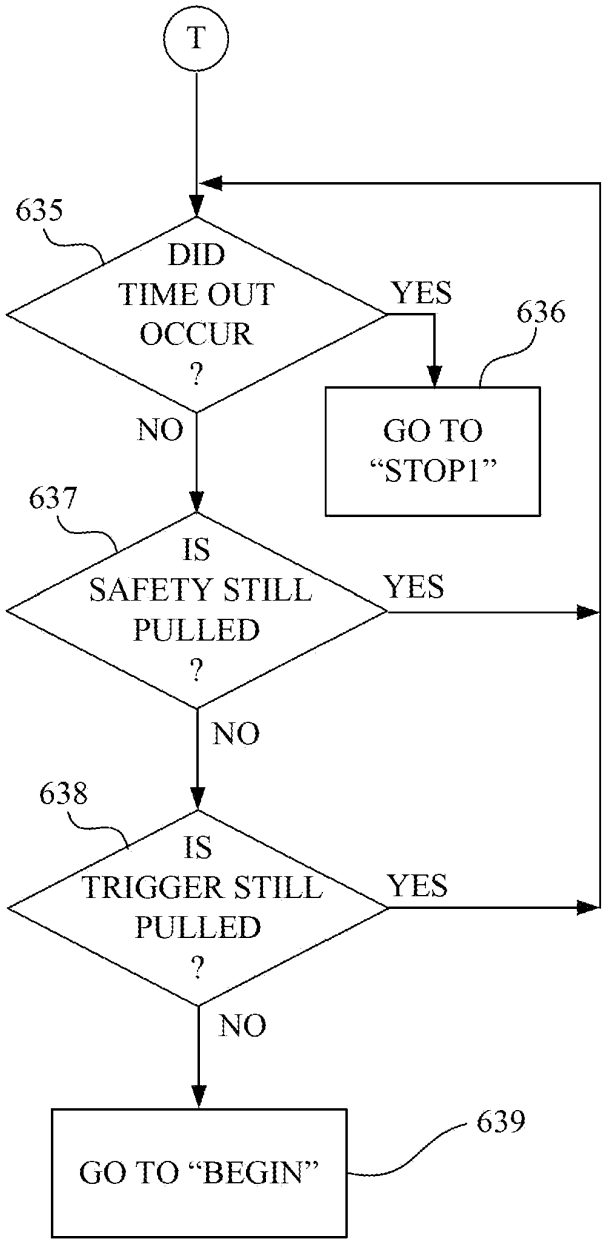
T
635
DID TIME OUT OCCUR ?
YES
636
GO TO "STOP1"
NO
637
IS SAFETY STILL PULLED ?
YES
NO
638
IS TRIGGER STILL PULLED ?
YES
NO
GO TO "BEGIN"
639

Fig. 36D

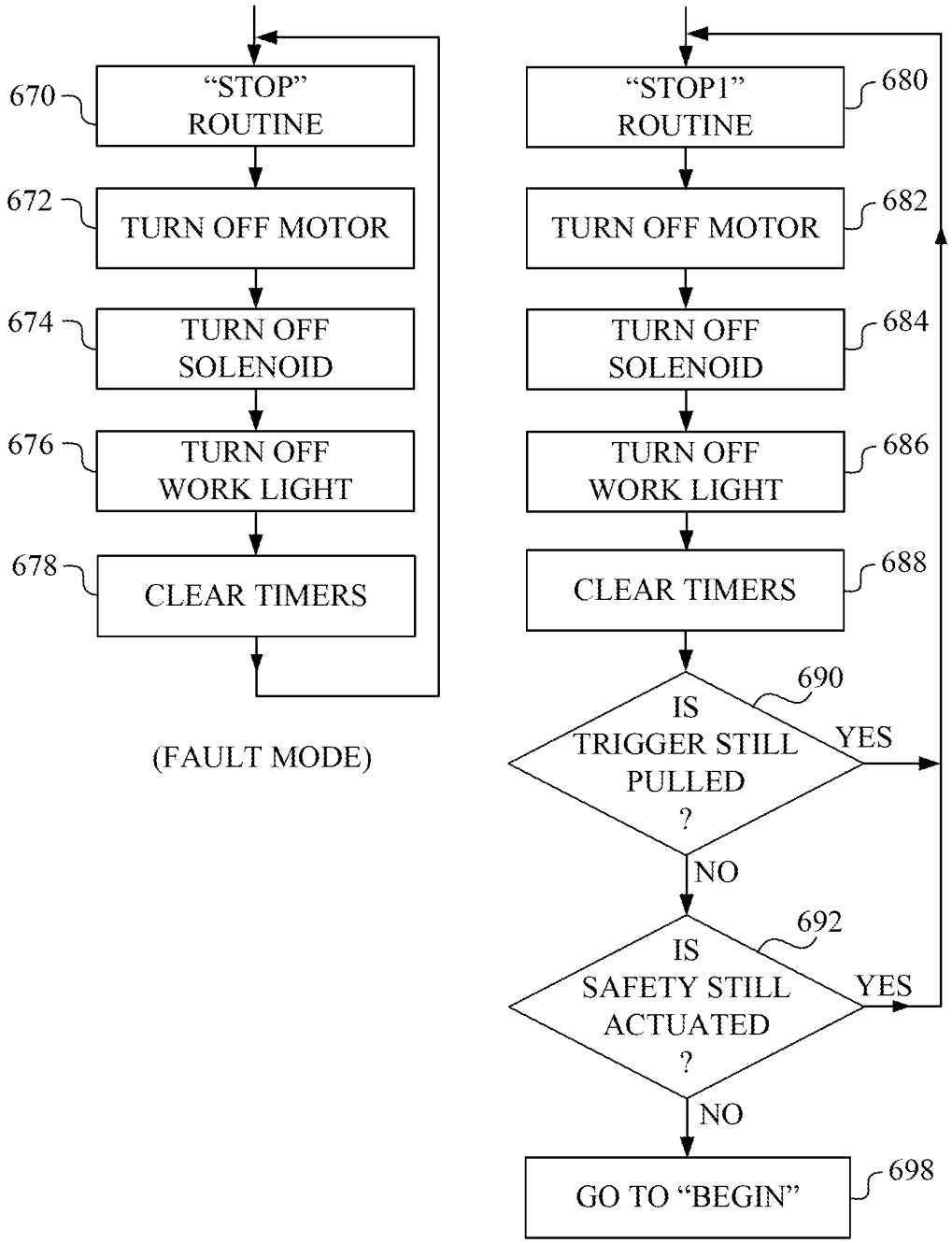
670
"STOP" ROUTINE
672
TURN OFF MOTOR
674
TURN OFF SOLENOID
676
TURN OFF WORK LIGHT
678
CLEAR TIMERS
(FAULT MODE)
"STOP1" ROUTINE
680
TURN OFF MOTOR
682
TURN OFF SOLENOID
684
TURN OFF WORK LIGHT
686
CLEAR TIMERS
688
IS TRIGGER STILL PULLED ?
690
YES
NO
IS SAFETY STILL ACTUATED ?
692
YES
NO
GO TO "BEGIN"
698

Fig. 37

FASTENER DRIVING TOOL USING A GAS SPRING

CROSS-REFERENCE TO RELATED APPLICATIONS

The present application is a continuation of Ser. No. 16/389,944, titled FASTENER DRIVING TOOL USING A GAS SPRING, filed on Apr. 30, 2019; which is a continuation of Ser. No. 15/583,202, titled FASTENER DRIVING TOOL USING A GAS SPRING, filed on May 1, 2017, now U.S. Pat. No. 10,478,954 (issued on Nov. 19, 2019); which is a continuation of Ser. No. 14/077,313, titled FASTENER DRIVING TOOL USING A GAS SPRING, filed on Nov. 12, 2013, now U.S. Pat. No. 9,676,088; which is a divisional of Ser. No. 13/770,481, titled FASTENER DRIVING TOOL USING A GAS SPRING, filed on Feb. 19, 2013, now U.S. Pat. No. 8,602,282; which is a continuation of Ser. No. 12/913,049, titled METHOD FOR CONTROLLING A FASTENER DRIVING TOOL USING A GAS SPRING," filed on Oct. 27, 2010, now U.S. Pat. No. 8,387,718; which is a divisional of Ser. No. 12/243,693, titled "METHOD FOR CONTROLLING A FASTENER DRIVING TOOL USING A GAS SPRING," filed on Oct. 1, 2008, now U.S. Pat. No. 8,011,441; which claims priority to provisional patent application Ser. No. 60/977,678, titled "FASTENER DRIVING TOOL USING A GAS SPRING," filed on Oct. 5, 2007.

BACKGROUND OF THE INVENTION

1. Field of the Invention

The present invention relates to linear fastener driving tools, and, more particularly, directed to portable tools that drive staples, nails, or other linearly driven fasteners. The invention is specifically disclosed as a gas spring linear fastener driving tool, in which a cylinder filled with compressed gas is used to quickly force a piston through a driving stroke movement, while also driving a fastener into a workpiece. The piston is then moved back to its starting position by use of a rotary-to-linear lifter, which again compresses the gas above the piston, thereby preparing the tool for another driving stroke. A driver member is attached to the piston, and has protrusions along its edges that are used to contact the lifter member, which lifts the driver during a return stroke. A pivotable latch is controlled to move into either an interfering position or a non-interfering position with respect to the driver protrusions, and acts as a safety device, by preventing the driver from making a full driving stroke at an improper time. In alternative embodiments, the fastener driving tool uses a different type of driving device, such as a mechanical spring, to force the driver into a driving stroke.

2. Description of the Related Art

An early air spring fastener driving tool is disclosed in U.S. Pat. No. 4,215,808, to Sollberger. The Sollberger patent used a rack and pinion-type gear to "jack" the piston back to its driving position. A separate motor was to be attached to a belt that was worn by the user; a separate flexible mechanical cable was used to take the motor's mechanical output to the driving tool pinion gear, through a drive train.

Another air spring fastener driving tool is disclosed in U.S. Pat. No. 5,720,423, to Kondo. This Kondo patent used a separate air replenishing supply tank with an air replenishing piston to refresh the pressurized air needed to drive a piston that in turn drove a fastener into an object.

Another air spring fastener driving tool is disclosed in published patent application no. US2006/0180631, by Pedicini, which uses a rack and pinion to move the piston back to its driving position. The rack and pinion gear are decoupled during the drive stroke, and a sensor is used to detect this decoupling. The Pedicini tool uses a release valve to replenish the air that is lost between nail drives.

What is needed in the art is a portable fastener driving tool that is electrically powered, but which uses a gas spring principle of operation to drive a fastener into an object, and also uses few moving parts, which allows for simplicity of operation and provides a substantially gas-tight system for containing the pressurized gas for the gas spring.

SUMMARY OF THE INVENTION

Accordingly, it is an advantage of the present invention to provide a fastener driving tool that operates on a gas spring principle, in which the cylinder that contains the moving piston and driver is substantially surrounded by a pressure vessel (as a main storage chamber) to increase the storage space of the pressurized gases needed for the gas spring effect.

It is another advantage of the present invention to provide a fastener driving tool that uses a gas spring principle to provide a quick downward driving stroke, and uses a rotary-to-linear lifter having a cam-shaped perimeter surface and multiple cylindrical protruding pins that lift the fastener driver element and the piston back to the initiating firing (or driving) position.

It is a further advantage of the present invention to provide a fastener driving tool that operates on a gas spring principle, in which the tool has a cylinder displacement volume and also includes a main storage chamber, and in which a volumetric ratio of the main storage chamber's volume with respect to the cylinder's displacement volume is at least 2.0:1.

It is still a further advantage of the present invention to provide a fastener driving tool that operates on a gas spring principle, in which there is a "working storage volume" comprising a combination of a main storage chamber and a cylinder displacement volume, and in which there is no gas replenishment system on-board the tool for allowing a user to replenish the charge gases of the tool's working storage volume, thereby reducing opportunities for gas leaks.

It is yet another advantage of the present invention to provide a fastener driving tool that uses a gas spring principle that uses a rotary-to-linear lifter to move the driver back to its firing (or driving) position, in which there can be a variable driving stroke by use of multiple rotations of the lifter member.

It is still another advantage of the present invention to provide a fastener driving tool that operates on a gas spring principle, in which, for a first embodiment, a movable latch is controlled by a solenoid to disengage from multiple teeth of the driver element during a driving stroke, but also will tend to engage the teeth of the driver element as a safety interlock, and also at the maximum driver element displacement just before a driving stroke is to occur, so that the movable latch engages the driver teeth until the user activates the tool.

It is still another advantage of the present invention to provide a fastener driving tool that operates on a gas spring principle, in which, for a second embodiment, a gearbox is provided that is essentially self-locking from its output side,

or has a one-way feature, and thus the gearbox/lifter combination holds the driver in position just before a driving stroke.

It is a yet further advantage of the present invention to provide a fastener driving tool that operates on a gas spring principle which includes a system controller that allows operation in either a "bottom firing mode" or a "trigger firing mode."

It is a still further advantage of the present invention to provide a fastener driving tool that operates on a gas spring principle in which the system controller has error correction capability, including the capability of recovering from a jam of the driver element, without having to completely disable the tool.

Additional advantages and other novel features of the invention will be set forth in part in the description that follows and in part will become apparent to those skilled in the art upon examination of the following or may be learned with the practice of the invention.

To achieve the foregoing and other advantages, and in accordance with one aspect of the present invention, a method for controlling a fastener driving tool is provided, in which the method comprises the following steps: (a) providing a fastener driving tool that includes: (i) a housing, (ii) a system controller, (iii) a fastener driving mechanism that moves a driver member toward an exit end of the mechanism, (iv) a prime mover that moves a lifter member which moves the driver member away from the exit end of the mechanism, (v) a latch control device that moves a latch member which has a catching surface, (vi) a safety contact element, (vii) a user-actuated trigger, and (vii) a fastener; (b) initiating a driving cycle by pressing the exit end against a workpiece and actuating the trigger, thereby: (i) causing the latch control device to activate, which moves the catching surface of the latch member to a position that does not interfere with movements of the driver member; and (ii) causing the fastener driving mechanism to force the driver member to move toward the exit end and drive the fastener into the workpiece; (c) actuating the prime mover, thereby moving the lifter member and causing the driver member to move away from the exit end toward a ready position; and (d) then de-activating the latch control device, which allows a mechanical biasing of the latch member to move the catching surface of the latch member to a position that interferes with movements of the driver member.

In accordance with another aspect of the present invention, a method for controlling a fastener driving tool is provided, in which the method comprises the following steps: (a) providing a fastener driving tool that includes: (i) a housing; (ii) a system controller; (iii) a safety contact element; (iv) a user-actuated trigger; (v) a fastener; (iv) a prime mover that moves a lifter member which moves a driver member away from an exit end of the mechanism; and (vii) a fastener driving mechanism that moves the driver member toward the exit end of the mechanism, the fastener driving mechanism including: (A) a hollow cylinder comprising a cylindrical wall with a movable piston therewithin, the hollow cylinder containing a displacement volume created by a stroke of the piston, and (B) a main storage chamber that is in fluidic communication with the displacement volume of the cylinder, wherein the main storage chamber and the displacement volume are initially charged with a pressurized gas; (b) selecting, by a user, an operating mode of the driving cycle to be one of: a "bottom firing mode," and a "restrictive firing mode;" wherein: (i) if the restrictive firing mode is selected, the tool will operate if the safety contact element has been actuated before the trigger actuator has been operated; and (ii) if the bottom firing mode is selected, the tool will operate if both: (A) the trigger actuator has been operated, and (B) the safety contact element has been actuated, in either sequence; (c) initiating a driving cycle by pressing the exit end against a workpiece and actuating the trigger, thereby causing the fastener driving mechanism to force the driver member to move toward the exit end and drive a fastener into the workpiece; and (d) actuating the prime mover, thereby moving the lifter member and causing the driver member to move away from the exit end toward a ready position.

In accordance with yet another aspect of the present invention, a fastener driving tool is provided, which comprises: (a) a housing that contains a prime mover, and a system controller; (b) a fastener driving mechanism that includes: (i) a hollow cylinder having a movable piston therewithin, the hollow cylinder having a first end and a second, opposite end, the hollow cylinder containing a displacement volume created by a stroke of the piston, the displacement volume being initially charged with a pressurized gas; (ii) a guide body that is substantially adjacent to the second end of the cylinder, the guide body having a receiving end, an exit end, and a passageway therebetween, the receiving end being proximal to the second end of the cylinder, the guide body being configured to receive a fastener that is to be driven from the exit end; (iii) an elongated driver member that is in mechanical communication with the piston, the driver member having a driving surface that is sized and shaped to push a fastener into an external workpiece, wherein the passageway of the guide body allows the driver member to pass therethrough toward the exit end during a driving stroke, and allows the driver member to pass therethrough away from the exit end during a lifting interval; (A) the driver member having a first longitudinal edge; (B) the driver member having a first plurality of spaced-apart protrusions along the first longitudinal edge; and (iv) a lifter member that exhibits an outer shape that defines a perimeter of the lifter member's surface: (A) the lifter member being movable, under command of the system controller, by the prime mover; (B) the lifter member having a discontinuous contact surface that, at predetermined locations along the discontinuous contact surface, makes contact with the first plurality of spaced-apart protrusions of the driver member such that, under first predetermined conditions, the lifter member is moved in a first direction and thereby causes the driver member to be moved from its driven position toward its ready position; and (C) the lifter member being positionable by the prime mover, under second predetermined conditions, such that the discontinuous contact surface of the lifter member does not mechanically interfere with the first plurality of spaced-apart protrusions along the first longitudinal edge of the driver member during the driving stroke, in which the driver member moves from its ready position toward its driven position; (c) a safety contact element that extends to the exit end of the guide body, and which is movable between an actuated position when the safety contact element is pressed against the external workpiece, and a non-actuated position when the safety contact element is not pressed against the external workpiece; (d) a trigger actuator that is user-actuated; (e) a trigger position sensor; and (f) a safety contact element position sensor; wherein the cylinder and piston act as a gas spring, under the second predetermined conditions, to move the driver member from its ready position toward its driven position, using the pressurized gas acting on the piston, while the driver member's driving

surface contacts a fastener and moves the fastener toward the exit end of the guide body.

Still other advantages of the present invention will become apparent to those skilled in this art from the following description and drawings wherein there is described and shown a preferred embodiment of this invention in one of the best modes contemplated for carrying out the invention. As will be realized, the invention is capable of other different embodiments, and its several details are capable of modification in various, obvious aspects all without departing from the invention. Accordingly, the drawings and descriptions will be regarded as illustrative in nature and not as restrictive.

BRIEF DESCRIPTION OF THE DRAWINGS

The above-mentioned and other features and advantages of this invention, and the manner of attaining them, will become more apparent and the invention will be better understood by reference to the following description of an embodiment of the invention taken in conjunction with the accompanying drawings, wherein:

FIG. **1** is a side view in partial cross-section of a first embodiment of a fastener driving tool constructed according to the principles of the present invention.

FIG. **2** is a perspective view mainly from the side, but also from above, and in partial cross-section, of the gas spring cylinder mechanism of the first embodiment fastener driving tool of FIG. **1**.

FIG. **3** is another perspective view from the side and somewhat from above and in partial cross-section of the gas spring cylinder portion of the first embodiment fastener driving tool of FIG. **1**, better showing the driver mechanism, with the piston at its lowest "driven" position.

FIG. **4** is another perspective view from the side and somewhat from above and in partial cross-section of the gas spring cylinder portion of the first embodiment fastener driving tool of FIG. **1**, in which the driver and piston are near their top-most position, but still latched and not quite ready for firing (driving).

FIG. **5** is another perspective view from the side and somewhat from above and in partial cross-section of the gas spring cylinder portion of the first embodiment fastener driving tool of FIG. **1**, in which the driver and piston are near their top-most position, in which the mechanism is now unlatched and ready for firing (driving).

FIG. **6** is a perspective view of driver, rotary-to-linear lifter, and latch portions of the driver mechanism for the first embodiment fastener driving tool of FIG. **1**.

FIG. **7** is another perspective view from a different angle of the same components of FIG. **6**.

FIG. **8** is a side view in partial cross-section of major portions of the driving mechanisms for the first embodiment fastener driving tool of FIG. **1**.

FIG. **9** is a perspective view mainly from the left side, but angled to better see the details of the latch mechanism including its solenoid, for the first embodiment fastener driving tool of FIG. **1**.

FIG. **10** is an elevational side view in cross-section of some of the details of the cylinder/piston components for the first embodiment fastener driving tool of FIG. **1**.

FIG. **11** is an elevational side view in cross-section of some of the details of the cylinder/piston components for an alternative embodiment that could be used with the first embodiment fastener driving tool of FIG. **1**.

FIG. **12** is a perspective view from the opposite side of the rotary-to-linear lifter, used in the first embodiment fastener driving tool of FIG. **1**.

FIG. **13** (FIGS. **13**A-**13**B) is a first portion of a flow chart showing some of the important logical steps performed by the controller of the first embodiment fastener driving tool of FIG. **1**.

FIG. **14** (FIGS. **14**A-**14**C) is a second portion of the flow chart of FIG. **13**.

FIG. **15** is a third portion of the flow chart of FIG. **13**.

FIG. **16** is a side, elevational view of a second embodiment of a fastener driving tool constructed according to the principles of the present invention.

FIG. **17** is a side view in partial cross-section of the second embodiment fastener driving tool of FIG. **16**.

FIG. **18** is a front, elevational view in partial cross-section of the second embodiment fastener driving tool of FIG. **16**.

FIG. **19** is a perspective view mainly from the side, but also from above, and in partial cross-section, of the gas spring cylinder mechanism of the second embodiment fastener driving tool of FIG. **16**.

FIG. **20** is another perspective view from the side and somewhat from above and in partial cross-section of the gas spring cylinder portion of the second embodiment fastener driving tool of FIG. **16**, better showing the driver mechanism, with the piston at its lowest "driven" position.

FIG. **21** is another perspective view from the side and somewhat from above and in partial cross-section of the gas spring cylinder portion of the second embodiment fastener driving tool of FIG. **16**, in which the driver and piston are near their top-most position, and the latch is in its interfering position.

FIG. **22** is another perspective view from the side and somewhat from above and in partial cross-section of the gas spring cylinder portion of the second embodiment fastener driving tool of FIG. **16**, in which the driver and piston are near their top-most position, and the latch is in its non-interfering position, in which the mechanism is now ready for firing (driving).

FIG. **23** is a perspective view of driver, rotary-to-linear lifter, and latch portions of the driver mechanism for the second embodiment fastener driving tool of FIG. **16**.

FIG. **24** is another perspective view from a different angle of the same components of FIG. **23**.

FIG. **25** is a side elevational view in partial cross-section of major portions of the driving mechanisms for the second embodiment fastener driving tool of FIG. **16**.

FIG. **26** is a side view in partial cross-section of major portions of the driving mechanisms for a third embodiment fastener driving tool somewhat similar to that of FIG. **16**, however, using a mechanical drive spring attached to the driver, rather than a gas drive spring in a cylinder.

FIG. **27** is a perspective view mainly from the left side, but angled to better see the details of the latch mechanism including its solenoid, for the second embodiment fastener driving tool of FIG. **16**.

FIG. **28** is an elevational side view in cross-section of some of the details of the cylinder/piston components for the second embodiment fastener driving tool of FIG. **16**.

FIG. **29** is a perspective view from the opposite side of the rotary-to-linear lifter, used in the second embodiment fastener driving tool of FIG. **16**.

FIG. **30** are perspective views showing some of the details of a first particular arrangement of a rotary-to-linear lifter and the surfaces that engage the driver, in which the lifter

exhibits a single "tooth" and has an arcuate outer perimeter shape, which can be used with the fastener driving tools of FIG. **1** or FIG. **16**.

FIG. **31** are perspective views showing some of the details of a second particular arrangement of a rotary-to-linear lifter and the surfaces that engage the driver, in which the lifter exhibits two "teeth" and has an irregular outer perimeter shape, which can be used with the fastener driving tools of FIG. **1** or FIG. **16**.

FIG. **32** are perspective views showing some of the details of a third particular arrangement of a rotary-to-linear lifter and the surfaces that engage the driver, in which the lifter exhibits three "teeth" and has a circular outer perimeter shape, which can be used with the fastener driving tools of FIG. **1** or FIG. **16**.

FIG. **33** are perspective views showing some of the details of a third particular arrangement of a rotary-to-linear lifter and the surfaces that engage the driver, in which the lifter exhibits three "teeth" and has a square outer perimeter shape, which can be used with the fastener driving tools of FIG. **1** or FIG. **16**.

FIG. **34** is a side, elevational view of a third embodiment of a fastener driving tool constructed according to the principles of the present invention, in which the storage chamber does not surround the working cylinder.

FIG. **35** (FIGS. **35**A-**35**C) is a first portion of a flow chart showing some of the important logical steps performed by the controller of the second embodiment fastener driving tool of FIG. **16**.

FIG. **36** (FIGS. **36**A-**36**D) is a second portion of the flow chart of FIG. **35**.

FIG. **37** is a third portion of the flow chart of FIG. **35**.

Corresponding reference characters indicate corresponding parts throughout the several views. The exemplification set out herein illustrates one preferred embodiment of the invention, in one form, and such exemplification is not to be construed as limiting the scope of the invention in any manner.

DETAILED DESCRIPTION OF THE INVENTION

The terms "first" and "second" preceding an element name, e.g., first pin, second pin, etc., are used for identification purposes to distinguish between similar elements, and are not intended to necessarily imply order, nor are the terms "first" and "second" intended to preclude the inclusion of additional similar elements.

Reference will now be made in detail to the present preferred embodiment of the invention, an example of which is illustrated in the accompanying drawings, wherein like numerals indicate the same elements throughout the views.

Referring now to FIG. **1**, a first embodiment of a fastener driving tool is generally designated by the reference numeral **10**. This tool **10** is mainly designed to linearly drive fasteners such as nails and staples. Tool **10** includes a handle portion **12**, a fastener driver portion **14**, a fastener magazine portion **16**, and a fastener exit portion **18**.

A "left" outer cover of the driver portion is indicated at **20**. A "top" cover is indicated at **22**, while a "front" outer cover or "housing" of the driver portion is indicated at **24**. A "rear" cover for the handle portion is indicated at **26** (which is also the battery pack cover), while a "rear" cover of the magazine portion is indicated at **28**. It will be understood that the various directional nomenclature provided above is with respect to the illustration of FIG. **1**, and the first embodiment fastener driving tool **10** can be used in many other angular positions, without departing from the principles of the present invention.

The area of the first embodiment tool **10** in which a fastener is released is indicated approximately by the reference numeral **30**, which is the "bottom" of the fastener exit portion of tool **10**. Before the tool is actuated, a safety contact element **32** extends beyond the bottom **30** of the fastener exit, and this extension of the safety contact element is depicted at **34**, which is the bottom or "front" portion of the safety contact element. Other elements that are depicted in FIG. **1** include a guide body **36** and a front cover **38**, which are in mechanical communication with the magazine portion **16**.

Reference numeral **60** indicates a magazine housing, while reference numeral **62** indicates a fastener track through which the individual fasteners run therethrough while they remain within the magazine portion **16**. A feeder carriage **64** is used to feed an individual fastener from the magazine into the drive mechanism area, and a back plate **66** is used to carry an individual fastener while it is being driven. In the illustrated embodiment, the feeder carriage **64** positions a fastener to a position within the guide body that is coincident with the path of the driver member **90**, so that when the driver **90** moves through a driving stroke, its driving end will basically intercept the fastener and carry that fastener to the exit end of the tool **10**, essentially at the bottom portion **30** of the tool's exit area.

The first embodiment fastener driving tool **10** also includes a motor **40** which acts as a prime mover for the tool, and which has an output that drives a gearbox **42**. An output shaft **44** of the gearbox drives a lifter drive shaft **102** (see FIG. **2**). A solenoid **46** is depicted on FIG. **1**, and further details of its operation are discussed below. A battery **48** is attached near the rear of the handle portion **12**, and this battery provides electrical power for the motor **40** as well as for a control system.

A printed circuit board that contains a controller is generally designated by the reference numeral **50**, and is placed within the handle portion **12** in this embodiment. A trigger switch **52** is activated by a trigger actuator **54**. As can been seen by viewing FIG. **1**, the handle portion **12** is designed for gripping by a human hand, and the trigger actuator **54** is designed for linear actuation by a person's finger while gripping the handle portion **12**. Trigger switch **52** provides an input to the control system **50**. There are also other input devices for the controller, however those input devices are not seen in FIG. **1**.

The controller will typically include a microprocessor or a microcomputer device that acts as a processing circuit. At least one memory circuit will also typically be part of the controller, including Random Access Memory (RAM) and Read Only Memory (ROM) devices. To store user-inputted information (if applicable for a particular tool model), a non-volatile memory device would typically be included, such as EEPROM, NVRAM, or a Flash memory device.

Referring now to FIG. **2**, a working cylinder subassembly is designated by the reference numeral **71**, and this is included as part of the fastener driver portion **14**. On FIG. **2**, the working cylinder **71** includes a cylinder wall **70**, and within this cylinder wall **70** is a piston **80**, a movable piston stop **82**, and a stationary piston stop **84** (see FIG. **3**). Part of the piston mechanism of this embodiment includes a piston seal **86**, a piston guide ring **88**, and a piston scraper **89** (see FIG. **10**). Surrounding, in the illustrated embodiment, the cylinder wall **70** is a main storage chamber **74** (also sometimes referred to herein as a "pressure vessel storage space")

and an outer pressure vessel wall **78** (which corresponds to the "front" cover **24** of FIG. **1**, along the left portion of this view). At the top (as seen on FIG. **2**) of the fastener driver portion **14** is a top cap **72** for the cylinder mechanism.

Also within the fastener driver portion **14** are mechanisms that will actually drive a fastener into a solid object. This includes a driver **90**, a cylinder "venting chamber" **94** (which would typically always be at atmospheric pressure), a driver track **98** (see FIG. **4**), a rotary-to-linear lifter **100**, and a latch **120**. The driver **90** is also sometimes referred to herein as a "driver member" and the rotary-to-lifter **100** is also sometimes referred to herein as a "lifter member," or simply as a "lifter." Driver **90** is rather elongated, and as an individual element can best be seen in FIGS. **6** and **7**. There are multiple "teeth" **92** that are positioned along the driver. In the illustrated embodiment, these teeth **92** are spaced-apart not only in a transverse direction from the elongated centerline of driver **90**, but they are also spaced-apart from one another along the outer longitudinal edges of the driver **90**. The positions of teeth **92** are clearly illustrated in FIGS. **6** and **7**. It will be understood that the precise positions for the teeth **92** could be different from those illustrated for the driver **90** without departing from the principles of the present invention.

There is a cylinder base **96** that mainly separates the gas pressure portions of the fastener driver portion **14** from the mechanical portions of that driver portion **14**. The venting of air from the cylinder venting chamber **94** passes through the cylinder base **96**, as seen at a vent **150** (see FIG. **3**). The mechanical portions of FIG. **2** begin with a rotary-to-linear lifter **100** which was briefly mentioned above, along with a lifter drive shaft **102**. Drive shaft **102** protrudes through the center portions of the fastener driver portion **14** and through the center of the lifter **100**, and this shaft is used to rotate the lifter, as desired by the control system.

Lifter **100** is not designed with an entirely circular outer perimeter, but instead is arcuate and portions of its perimeter exhibit an eccentric shape of a cam (see FIG. **12**). A portion of the lifter's outer perimeter is mainly circular for about half of a circle (designated by the reference numeral **116**), but the other half of the lifter's outer perimeter is more eccentric, which provides an elliptical surface that is designated by the reference numeral **110**. The rotary-to-linear lifter **100** also includes three cylindrical protrusions (or "extensions") that will also be referred to herein as "pins." The first such pin ("pin 1") is designated **104**, the second pin ("pin 2") is designated **106**, while the third pin ("pin 3") is designated **108**. These pins are all viewed on FIG. **12**. Furthermore, there is a fourth cylindrical pin ("pin 4") that protrudes from the opposite side of the lifter **100**, which fourth pin is designated **114**, and which can be viewed on several of the other figures, namely FIGS. **2-8**.

It should be noted that FIGS. **2-8** also depict a "back" side of the first three pins **104**, **106**, and **108**, in which these views essentially show a "boss portion" of those pins. These boss portions of the pins **104**, **106**, **108** are not entirely necessary for the proper functioning of the rotary-to-linear lifter **100**, however, the boss portions are illustrated in the figures of this patent document for ease of description. (In other words, the surface of the lifter **100** could be perfectly smooth at those locations rather than exhibiting a "boss.") It should be understood that the "working side" of these three pins **104**, **106**, and **108** is on the opposite side of the lifter **100** in the views of FIGS. **2-8**, and this working side is directly illustrated in FIG. **12**. When discussing these pins **104**, **106**, and **108** with respect to FIGS. **2-8** in this written description, it is with reference to the "boss side" of those pins; however, the effects of the "working side" of those pins is discussed in some detail with respect to other structures that are also illustrated on FIGS. **2-8**. It should also be noted that pins **104**, **106**, **108**, and **114** are illustrated as having circular cross-sectional shapes, which is desirable for this embodiment, although other cross-sectional shapes could instead be used without departing from the principles of the present invention, particularly for the fourth pin **114**.

The latch **120** that was briefly noted above is depicted on FIG. **2**, and has a latch shaft **122** protruding therethrough, and this shaft rotates the latch **120** as determined by the controller. Latch **120** includes a latch "catching surface" at **124**, and this will be more fully explained below. In FIG. **2**, there is an internal cover **112** that is a portion of the back plate **66**, and hides some of the other mechanical components that will be visible in other views.

In FIG. **2**, the piston **80** is not quite at its uppermost or top-most position, and a gas pressure chamber **76** can be seen above the top-most area of the piston, near the piston seal **86**. It will be understood that the gas pressure chamber **76** and the main storage chamber (or storage space) **74** are in fluidic communication with one another. It will also be understood that the portion to the interior of the cylinder wall **70** forms a displacement volume that is created by the stroke of the piston **80**. In other words, the gas pressure chamber **76** is not a fixed volume, but this chamber will vary in volume as the piston **80** moves up and down (as seen in FIG. **2**). This type of mechanical arrangement is often referred to as a "displacement volume," and that terminology will mainly be used herein for this non-fixed volume **76**.

It will be further understood that the main storage chamber **74** preferably comprises a fixed volume, which typically would make it less expensive to manufacture; however, it is not an absolute requirement that the main storage chamber actually be of a fixed volume. It would be possible to allow a portion of this chamber **74** to deform in size and/or shape so that the size of its volume would actually change, during operation of the present invention, without departing from the principles of the present invention.

In the illustrated embodiment for the first embodiment fastener driving tool **10**, the main storage chamber **74** substantially surrounds the working cylinder **71**. Moreover, the main storage chamber **74** is annular in shape, and it is basically co-axial with the cylinder **71**. This is a preferred configuration of the illustrated first embodiment, but it will be understood that alternative physical arrangements could be designed without departing from the principles of the present invention.

Referring now to FIG. **3**, the piston is depicted at its bottom-most travel position, and in this configuration, the displacement volume **76** and the main storage chamber **74** are at their largest combined volumes, while the cylinder venting chamber **94** is at its minimum volume. This bottom position is also sometimes referred to herein as the "driven position."

In FIG. **3**, the movable piston stop **82** is now in contact with the stationary piston stop **84**, which is why the cylinder venting chamber **94** is at its minimum (or zero) volume. In FIG. **3**, the driver **90** is also at its bottom-most travel position, and its lower-most tip can be seen extending out the exit port at the bottom of the guide body **36**.

In FIG. **3**, the rotary-to-linear lifter **100** and the latch **120** are in their respective positions at the end of a firing (driving) stroke, and the latch **120** has its latching surface **124** in a location that will not interfere with the teeth **92** of the driver **90**. This is necessary so that the driver **90** can make a linear stroke from its top-most position to its

bottom-most position. However, the latch **120** will later be slightly rotated by the latch shaft **122** (which is spring-loaded) so that its catching surface **124** will be able to interfere with the teeth **92**.

In the configuration depicted on FIG. **3**, the fastener driving tool **10** has been used to drive a fastener, and the tool now must cause the driver **90** to be "lifted" back to its top-most position for a new firing (driving) stroke. This is accomplished by rotating the lifter **100**, which is actuated by the motor **40**, through its gearbox **42**, etc.

As rotary-to-linear lifter **100** rotates counterclockwise (as seen in FIG. **3**) at least one of its pins **104**, **106**, or **108** will come into contact with one of the teeth **92** along the left side (as seen in FIG. **3**) of the driver **90**. This will cause the driver **90** to be "lifted" upward (as seen in FIG. **3**). As the lifter **100** rotates, one of the teeth **92** will be in contact with one of the rotating pins **104**, **106**, **108** throughout a portion of the rotational travel of the lifter, and the "next" pin will then come into contact with the "next" tooth **92** so that the driver **90** continues to be moved upward. This will remain true until the eccentric cam surface **110** comes into play, and since there are no "working" lifter pins protruding along that surface, the driver **90** will not continue to be driven upward while the eccentric cam surface **110** is positioned along the right portion (as seen in FIG. **3**) of the rotary-to-linear lifter **100**. However, when this occurs, the latch **120**, which is spring-loaded, will have its latch catching surface **124** in a proper location to "catch" the closest tooth **92** along the right-hand side (as seen in FIG. **3**) of the driver **90**, thereby preventing the driver from falling downward for any significant distance. After this occurs, the "next" lifter pin (which will be the pin **104**) will then come along and again make contact with one of the teeth **92** along the left-hand side (as seen in FIG. **3**) of the driver **90**, thereby continuing to lift the driver toward the top (as seen in FIG. **3**) of the cylinder **71**.

In the illustrated embodiment of the first embodiment fastener driving tool **10**, the rotary-to-linear lifter **100** makes two complete rotations to lift the driver **90** from its bottom-most position to its top-most position. (The upper position is also sometimes referred to herein as the "ready position.") At the end of the second rotation, the parts will be configured as illustrated in FIG. **4**. The piston **80** is once again near the top of the cylinder **71**, and the combined volumes of the main storage chamber **74** and displacement volume **76** have now been reduced to a smaller volume, which means their gases are under a greater pressure, since the gas that was above the piston and in chamber **74** was compressed during the lift of the driver. (As noted above, the actual volume of the main storage chamber **74** does not change in the illustrated embodiment.) During the lift of the driver, the latch **120** was "engaged" with the teeth **92**, however, the latch has a smooth surface in one direction that allows the teeth **92** to push the latch out of the way during the upward lift of the driver. This is much like a ratchet-type action, remembering that the latch is spring-loaded so as to act in this manner.

In FIG. **4**, the "last" tooth **126** along the right-hand side (as seen in FIG. **4**) of the driver **90** is engaged with the latch catching surface **124**, and so latch **120** now prevents the driver from being moved downward (as seen in this view). The third pin **108** is still in contact with the lower-most tooth **92** along the left-hand side (as seen in FIG. **4**) of the driver **90**, at this point in the rotational travel of the rotary-to-linear lifter **100**. There is a sensor which, in the illustrated embodiment, is a limit switch **130** (see FIG. **8**), that detects the rotational movements of the lifter **100**. This sensor detects the fourth pin **114**, as discussed below in greater detail.

When the sensor **130** detects the fourth pin **114** a first time (in this embodiment), the control system turns off the solenoid **46**, which will then allow the latch **120** to engage the right-hand teeth (in these views) of the lifter **100**. Note that the solenoid can also be turned off earlier during the lift, if desired. When sensor **130** detects this pin **114** a second time (in this embodiment), the current to the motor **40** is turned off, and the motor thus is de-energized and stops the lifting action of the driver **90**. As described herein, the solenoid **46** acts as a latch actuator.

Due to the gas pressure above the piston **80**, the driver/piston subassembly will drift downward (in these views) a small distance until the tooth **126** contacts the latch surface **124**. This is the position illustrated in FIG. **4** of these components, and this configuration is considered to be the "rest" position of the tool. Although the gas pressure in the combined main storage chamber **74** and displacement volume **76** is at its maximum, the latch **120** prevents the driver from being moved further downward, so the piston is essentially locked in this position until something else occurs. In a preferred mode of the invention, the pressure vessel may be pressurized at about 100 PSIG to 120 PSIG.

When it is time to drive a fastener, the next action in the illustrated first embodiment is to cause the motor **40** to become energized once again. This occurs by two independent actions by the user: in some modes of the invention, these two independent actions can occur in either order. (There is also an optional "restrictive mode" of operation, in which the two independent actions must occur in a specific order.) These two actions are: pressing the nose **34** of the safety contact element **32** against a solid surface, and depressing the trigger actuator **54**. The trigger actuator will cause the trigger switch **52** to change state, which is one condition that will start sending current to the motor **40**. The safety contact element **32** has an upper arm **134** (see FIG. **8**) that will be moved as the nose **34** is pushed into the tool **10**, and this upper arm **134** will actuate another sensor which, in the illustrated embodiment, is a second limit switch **132** (see FIG. **8**). When both of these actions are occurring simultaneously, current is delivered to the motor **40** which will once again turn the rotary-to-linear lifter **100** a short distance. Also, the controller will energize the solenoid **46**, which will rotate the latch **120** a small angular distance clockwise (as seen in FIG. **5**) to disengage the latch catching surface **124** from one of the teeth **92** of the driver **90**. More specifically, this would be the "last" tooth **126** as seen in FIG. **5**. Note that FIGS. **6** and **7** show details of the same structure depicted in FIG. **5** at different perspective angles.

It should be noted that the rotary motion of the lifter **100** will cause a small upward movement of the driver **90** so that the latch **120** can easily disengage from the "last" tooth **126** of the driver **90**. Thus, there will not be a binding action that might otherwise cause the mechanism to jam.

Now that all this has occurred, the latch **120** is in its disengaged position so that its catching surface **124** will not interfere with any of the teeth **92** along the right-hand side (as seen in FIG. **5**) of the driver **90**; also the eccentric cam surface **110** is now facing the teeth **92** along the left-hand side (as seen in FIG. **5**) of the driver **90**, and none of the three "working" pins of the lifter will interfere with those left-hand teeth **92**. Once the driver tooth "drops off" the last lifting pin **108**, the driver **90** is quickly thrust downward in a linear stroke, due to the high gas pressure within the main storage chamber **74** and displacement volume **76**. (This is the "gas spring" effect.) Along the way, the driver **90** will pick up a fastener that is waiting at the feeder carriage **64**, and drive that fastener along the back plate **66** to the exit area

at the bottom (at the area **30** on FIG. **1**). After this action has occurred, the driver **90** will be situated at its lower-most position, as viewed in FIG. **3**.

The pressure of the gas in the combined main storage chamber **74** and displacement volume **76** is sufficiently high to quickly force the driver **90** downward, and such pneumatic means is typically much faster than a nail driving gun that uses exclusively mechanical means (such as a spring) for driving a fastener. This is due to the "gas spring" effect caused by the high gas pressure within the main storage chamber **74** and displacement volume **76** that, once the driver is released, can quickly and easily move the driver **90** in a downward stroke.

As the driver **90** is being moved downward, the piston **80** and the movable piston stop **82** are forcing air (or possibly some other gas) out of the cylinder venting chamber **94** that is below the piston. This volume of air is moved through a vent to atmosphere **150**, and it is desired that this be a low resistance passageway, so as to not further impede the movement of the piston and driver during their downward stroke. The gas above the piston is not vented to atmosphere, but instead remains within the displacement volume **76**, which is also in fluidic communication with the main storage chamber **74**.

One aspect of the present invention is to provide a rather large storage space volume to hold the pressurized gas that is also used to drive the piston downward during a driving stroke of the driver **90**. There is a fluidic passage **152** between the upper portion of the cylinder and the main storage chamber **74**. (In the illustrated first embodiment, the cylinder wall **70** does not extend all the way to the "top" cap **72**.) It is preferred that the volume of the main storage chamber be larger than the total volume of the cylinder working spaces (i.e., the displacement volume) by a volumetric ratio of at least 2.0:1, and more preferably at least 3.0:1. This will allow for a powerful stroke, and a quick stroke.

The illustrated first embodiment of the present invention allows for both a quick firing (or driving) stroke time and also a fairly quick "lifting" time to bring the driver back to its upper position, ready for the next firing (driving) stroke. Both of these mechanical actions can sequentially occur in less than 340 milliseconds (combined time), and allow a user to quickly place fasteners into a surface. In one operating mode of the present invention, the human user can hold the trigger in the engaged position and quickly place a fastener at a desired location merely by pressing the nose (or "bottom") of the tool against the working surface to actuate the fastener driver and place the fastener. Then the user can quickly remove the fastener driver tool from that surface, and move it to a second position along the work surface, while still depressing the trigger the entire time, and then press the nose (or bottom) of the tool against the working surface at a different position, and it will drive a fastener at that "different" position. This is referred to as a "bottom fire" capability, and when using the illustrated embodiment it can occur virtually as fast as a human can place the tool against a surface, then pick up the tool and accurately place it against the surface at a different position, and thereby repeat these steps as often as desired until emptying the magazine of fasteners. This type of mode of operation will be discussed in greater detail below in connection with the logic flow chart starting at FIG. **13**, with respect to the control system of the fastener driving tool **10**.

Referring now to FIG. **8**, another side sectional view is provided that shows some of the elements beneath the latch and other portions of the first embodiment fastener driving tool **10**. There are two electromechanical limit switches **130** and **132**. The limit switch **130** detects movements of the fourth pin **114** of the rotary-to-linear lifter **100** (as noted above). The limit switch **132** detects movement of the upper arm **134**, which is a portion of the safety contact element **32** that is pushed rearward (or "up" in these views) with respect to the overall tool **10** when the nose of the tool is pressed against a working surface. These limit switches provide electrical input signals to the controller, which is discussed below in greater detail. It will be understood that other types of sensors could be used instead of electromechanical limit switches, such as optoelectrical sensors, or magnetic sensors, including a Hall-effect switch, or even a metal-sensing proximity switch.

Also viewed on FIG. **8** is a return spring **136**, which causes the safety contact element **32** to be pushed back downward (in this view) once the user releases the nose of the tool **10** from the working surface. In addition, there is a depth of drive adjustment at **138**.

Referring now to FIG. **9**, further details of the solenoid are viewed. In FIG. **9**, the solenoid **140** has a plunger **142** that will move linearly either in or out from the main coil body of the solenoid **140**. When the solenoid is energized, it pulls the plunger **142** in toward the solenoid body **140**, which rotates a solenoid arm **146** (part of the solenoid's "linkage"), which in turn rotates the latch shaft **122** that also rotates the latch **120** a small arcuate distance. This causes the latch **120** to disengage from the teeth **92** of the driver **90**. On the other hand, when the solenoid **140** becomes de-energized, the plunger will be pushed out by the plunger spring **144**, which will rotate the solenoid arm **146** a short distance, and that in turn rotates the latch shaft **122** and the latch **120**. This will tend to cause the latch to engage the teeth **92** along the right-hand side (as seen in FIG. **5**) of the driver **90**. However, since this is a spring action, the teeth **92** can slide against the surface of the latch **120** and move the latch out of the way if the teeth are attempting to move upward along with the driver **90**. However, the spring action of the solenoid plunger spring will be strong enough to push the latch **120** into its engaged position, and any teeth **92** attempting to move downward will be caught by the catching surface **124** of the latch **120**.

This "catching" action of the latch **120** has more than one benefit. In the first place, the latch holds the tooth **126** (which is the "bottom tooth" along the right-hand side of the driver as seen in FIG. **5**) in place when the piston has been lifted to its top or "firing" position. The driver cannot be fired until the latch **120** is moved out of the way, as discussed above. On the other hand, if there is some type of jam or an improper use of the tool by a user such that the driver **90** does not totally complete its travel during a firing (driving) stroke, the latch **120** will also prevent a misfire from occurring at an inconvenient time.

More specifically, if the driver jams during a drive stroke, and if a person tries to clear the jam, and if there was no precaution taken to prevent the remainder of the stroke from occurring at that moment, then possibly an injury could occur when the driver **90** suddenly becomes released from its jammed condition. In other words, a fastener could be driven during the attempt to clear the jam, and that fastener would likely be directed somewhere that is not the original target surface. In the present invention, the latch **120** will have its solenoid **140** become de-energized once the jam occurs (because solenoid **140** will de-energize after a "timeout" interval occurs), and therefore the latch **120** will be engaged and the catching surface **124** will be in a position to interfere with the downward movement of the driver teeth

92. By use of this configuration, the driver could only move a short distance even if the jam was suddenly cleared, because the latch catching surface **124** will literally "catch" the "next" tooth **92** that unexpectedly comes along during a downward travel of the driver **90**. This makes the tool much safer in situations where a complete driver stroke has not occurred.

The process for controlling the solenoid and the moments when the solenoid will either be energized or de-energized are discussed below in connection with the flow chart that begins on FIG. **13**.

With respect to various types of firing (or driving) modes, a "trigger fire" mode is where the user first presses the tool nose against a working surface, and then depresses the trigger actuator **54**. It is the trigger being depressed that causes the drive stroke to occur in this situation. With respect to a "bottom fire" mode, the trigger is actuated first, and then the user presses the nose of the tool against a work surface, and it is the work surface contact that causes the drive stroke to occur. As discussed above, the user can continue to hold the trigger down while pressing against and releasing the tool from the work surface multiple times, and obtain quick multiple firing strokes (or driving strokes), thereby quickly dispensing multiple fasteners into the working surface at various locations.

There is also an optional "restrictive firing mode," in which the nose of the tool must be first placed against a working surface before the trigger is pulled. If the sequence of events does not unfold in that manner, then the drive stroke will not occur at all. This is strictly an optional mode that is not used by all users, and certainly in not all situations.

With regard to alternative embodiments of the present invention, an exemplary fastener driving tool can be made with a main storage chamber volume of about twelve cubic inches and a cylinder displacement volume of about 3.75 cubic inches. This would provide a volumetric ratio of the main storage chamber versus the displacement volume of about 3.2:1. As discussed above, it is desirable for the volumetric ratio of the main storage chamber's volume to the displacement volume to be at least 2.0:1, and it could be much higher if desired by the fastener driving tool's designer.

The working pressure in the system could be around 120 PSIG, and should probably be at least 100 PSIG for a quick-firing tool. By the term "working pressure" the inventors are referring to the pressure in the displacement volume **76** (and main storage chamber **74**) at the time the piston **80** is at its "ready" position, which is when it is at (or proximal to) its uppermost travel position as illustrated in FIGS. **2-5**.

It should be noted that other gases besides air can be used for the main storage chamber and the displacement volume, if desired. While air will work fine in many or most applications, alternative gases could be used as the "charge gas," such as carbon dioxide or nitrogen gas. Moreover, the use of nitrogen gas can have other benefits during the manufacturing stage, such as for curing certain adhesives, for example.

In the illustrated first embodiment, there is no fill valve on the fastener driving tool **10** at the storage tank (main storage chamber) **74**. This is a preferred mode of the present invention, although an optional fill valve could be provided, if desired by a tool designer. The design of the preferred mode of the present invention is such that the charge gas should not significantly leak from the tool, and therefore a fill valve would not be required.

Another feature of the present invention is that a variable stroke is possible by causing the rotary-to-linear lifter **100** to be rotated a multiple number of times to create a shorter or longer firing (driving) stroke, if desired. In the illustrated first embodiment, the lifter **100** makes a complete rotation two times to lift the piston from its lower-most position to its top-most position. This number of rotations of the lifter could be increased to three times or four times if desired, or even could be decreased to a single turn for a shorter stroke tool, if desired.

Another possible variation is to use a composite sleeve for the internal cylinder wall **70**, which would make contact with the seals of the piston **86**. In addition, the outer pressure vessel wall **78** could also be made of a composite material, if desired. The use of a carbon fiber composite, for example, would decrease weight, but would maintain the desired strength.

Referring now to FIG. **10**, some of the details of a first piston arrangement are illustrated in cross-section for one of the embodiments of the present invention. The piston is depicted at the reference numeral **80**. A piston seal **86** is near the upper end (in this view) of the piston **80**, and a piston scraper **89** is near the lower end (in this view) of the piston. A piston guide ring **88** is located at a central region of the piston, and essentially surrounds that middle portion of the piston.

Referring now to FIG. **11**, some of the details of a second piston arrangement are illustrated in cross-section for an alternative embodiment of the present invention. The second embodiment piston is designated by the reference number **180**. There are upper and lower seals at **182** and **184**, respectively. Between these seals is an annular space **186** that is at least partially filled with lubricating fluid, such as oil. This oil will tend to lubricate the movements of the piston **180** along the inner surface of the alternative cylinder wall **170**. The seals **182** and **184** are designed to hold the oil **188** within the annular space **186** indefinitely, or at least to lose the oil only at a very slow rate.

Referring now to FIG. **12**, the opposite side (compared to FIGS. **3-5**) of the rotary-to-linear lifter **100** is illustrated. The three pins **104**, **106**, and **108** are directly seen in this view, and this is the "working side" of those three pins, which make contact with the teeth **92** of the driver **90**. FIG. **12** shows the positional relationship of these three pins with respect to the lifter **100** and the center position for the lifter drive shaft **102**, in an exemplary embodiment of the present invention. In addition, FIG. **12** shows the semi-circular outer shape of a first part of the perimeter of the lifter at **116**, and the more elliptical outer shape of a second part of the perimeter of the lifter at **110**, as discussed above. The outer shape of the perimeter portions (at **110** and **116**) define an outer perimeter of a surface from which these pins **104**, **106**, and **108** protrude.

Referring now to FIG. **13**, a logic flow chart is provided to show some of the important steps used by a system controller for the fastener driving tool **10** of the illustrated embodiment for the present invention. Starting at an initializing step **200**, a step **202** loads registers with predetermined values, and a step **204** loads special function registers with predetermined values. A step **206** now "checks" the RAM (Random Access Memory) to be sure it is functioning properly, and then a step **208** clears the RAM. A step **210** now loads unused RAM with predetermined values, based on the software coding for the system controller (typically in firmware or hard-coded).

A step **212** now determines the stability of the system electrical power supply. And then a step **214** initializes the

interrupts that will be used for the controller. The controller is now ready to enter into an operational routine.

At a step **220**, the control logic enters a "FIRST 1" routine. A decision step **240** now determines whether or not a "mode" selector switch has been activated. (Note, this mode switch would typically be only an optional feature for a driving tool **10**, and many tools will not include this mode switch at all.) If the answer is NO, then the logic flow is directed to a decision step **222**. On the other hand, if the mode selector switch was turned "on," then the logic flow is directed to a step **242** in which the tool enters a "restrictive fire" routine. The logic flow is directed now to a decision step **244** that determines if the trigger has been pulled. If the answer is NO, then the logic flow is directed to a decision step **224**. On the other hand, if the trigger has been pulled, then the logic flow is directed to a step **246** that will further direct the logic flow to the "STOP 1" function (or routine) at step **380** on FIG. **15**. It should be noted that, in the "restrictive fire" mode of operation, the trigger cannot be pulled first; instead the nose of the fastener driving tool must be pushed against the solid surface before the trigger is pulled.

If the answer at step **240** was NO, the decision step **222** now determines whether or not the trigger has been pulled. If the answer is YES, the logic flow is directed to a step **230** in which the logic flow enters a "TRIGGER" routine. A step **231** turns on a "work light" which is a small electric lamp (e.g., an LED) that illuminates the workpiece where the fastener is to be driven.

A decision step **232** now determines whether or not a predetermined timeout has occurred, and if the answer is YES, a step **234** directs the logic flow to a "STOP 1" routine, that is illustrated on FIG. **15** at a step **380**. What this actually means is that a user pulled the trigger, but then did not actually use the tool against a solid surface, and rather than having the tool ready and primed to fire a fastener at any moment for an indefinite period of time, a predetermined amount of time will pass (i.e., the "timeout" interval), and once that has occurred, the system will be basically deactivated in the STOP 1 mode. This is not a permanent stoppage of the functioning of the tool, but is only temporary. Note that the "timeouts" are interrupt driven, in an exemplary embodiment of the present invention.

If the timeout has not occurred at decision step **232**, then a decision step **236** determines if the safety has been actuated. If the answer is NO, then the logic flow is directed back to the FIRST 1 routine **220**. On the other hand, if the safety has been actuated at step **236**, then the logic flow is directed to a step **238** that will send the logic flow to a "DRIVE" routine, which is on FIG. **14** at a step **260**. This will be discussed below in greater detail.

If, either at step **222** or step **244**, the trigger was not yet pulled, then the logic flow is directed to the decision step **224**. When the logic flow reaches decision step **224**, the logic now determines whether or not the safety has been actuated. This step determines whether or not the safety contact element **32** has been pressed against a solid object to an extent that actuates the sensor (e.g., limit switch **132**), which means that the tool is now pressed against a surface where the user intends to place a fastener. If the answer is NO, the logic flow is directed back to the mode switch query at decision step **240**. However, if the answer is YES, the logic flow is directed to a step **250** in which the controller enters a "SAFETY" routine.

Once at the SAFETY routine at step **250**, a step **251** turns on the "work light," which is the same lamp/LED that was discussed above in reference to step **231**. A decision step **252** now determines whether or not a timeout has occurred, and if the answer is YES, the logic flow is directed to a step **254** that directs the logic flow to the "STOP 1" function at step **380** on FIG. **15**. This temporarily stops the tool from operating. On the other hand, if the timeout has not yet occurred, the logic flow is directed to a decision step **256** that determines whether the trigger has been pulled. If the answer is NO, the logic flow is directed back to the decision step **224**. On the other hand, if the answer is YES, the logic flow is directed to a step **258** that causes the tool to enter the "DRIVE" mode of operation at step **260** on FIG. **14**.

As can be seen by reviewing the flow chart of FIG. **13**, unless the tool **10** is in the restrictive fire mode (at step **242**), the tool can be actuated with either one of the two important triggering steps occurring first: i.e., the trigger could be pulled before the safety is actuated, or vice versa.

Referring now to FIG. **14**, the logic flow from FIG. **13** is directed to the "DRIVE" routine **260** from two other steps on FIG. **13**: these are step **238** and step **258**. Once at the DRIVE routine **260**, a switch debounce step **262** is executed to determine whether or not one or both of the triggering elements was somehow only actuated intermittently. If so, the system designers have determined that the tool should not operate until it is more certain that the input switches have actually been actuated. To do this, the logic flow is directed to a decision step **264** to determine if the safety is still actuated. If the answer is NO, then the logic flow is directed to a step **266** that sends the logic flow back to the SAFETY routine at step **250**. On the other hand, if the safety still is actuated at step **264**, then the logic flow is directed to a decision step **270** to determine if the trigger is still being pulled. If the answer is NO, then the logic flow is directed to a step **272** that sends the logic flow back to the TRIGGER routine at step **230**.

On the other hand, if decision steps **264** and **270** are both answered affirmatively, then a step **280** clears the operational timers, and the logic flow is then directed to a decision step **282** that determines if the software code flow is within certain parameters. This is a fault-checking mode of the software itself, and if the system does not determine a satisfactory result, then the logic flow is directed to a step **284** that sends the logic flow to a "STOP" routine at a step **370** on FIG. **15**. This will ultimately turn the tool off and require a safety inspection of the tool, or at least have the tool reset. However, the tool does not need to be completely disabled, and after the safety inspection and tool reset procedure, the tool will be ready to use again without being sent to a service center. In an exemplary mode of the invention, the code flow check step determines if a correct number resides in a register or memory location; this number is the result of being incremented at predetermined executable steps of the software for the system controller.

If the software code flow check is within acceptable parameters at decision step **282**, then the logic flow is directed to a step **290** that turns on the motor, and then a step **292** that turns on the solenoid. A step **294** now starts the solenoid timer and a step **296** now starts the motor run timer. As will be discussed below, these timers will be periodically checked by the system controller to make sure that certain things have occurred while the solenoid is on and while the motor is running Otherwise, after a predetermined maximum amount of time, the motor will be turned off and the solenoid will be turned off due to these timers actually timing out, which should not occur if the tool is being used in a normal operation, and if the tool is functioning normally.

In addition to the solenoid and motor run timers discussed above, a "dwell timer" is used to allow the tool to begin its

normal operation before any further conditions are checked. This is accomplished by a decision step **298** on FIG. **14**, which causes the logic flow to essentially wait a short amount of time before continuing to the next logic steps.

Once the dwell timer has finished at step **298**, the logic flow is directed to a decision step **300** that determines if the solenoid "on time" has been exceeded. If the answer is YES, the logic flow is directed to a step **302** that turns off the solenoid. This situation does not necessarily mean the tool is being misused or is not functioning properly, and therefore the logic flow does not travel to a "stop step" from the step **302**. Instead, the logic flow is directed to a decision step **304**, discussed below.

If the solenoid on time has not been exceeded, then the logic flow also is directed to the decision step **304**, which determines if the cam limit switch has received a first signal. This is the limit switch **130** that detects the presence or absence of the fourth pin **114** of the lifter. If the tool of the illustrated embodiment is being used, the lifter **110** will make two complete rotations when lifting the driver and piston from their bottom-most positions to their top-most positions. Therefore, the cam limit switch **130** will receive two different signals during this lift. Step **304** determines if the first signal has occurred. If not, then a decision step **310** determines whether the motor timeout has occurred. If the answer is NO, then the logic flow is directed back to decision step **300**. On the other hand, if the motor run timer has indeed timed out, then the logic flow is directed to a step **312** that sends the logic flow to a "STOP" routine at step **370**. This would likely indicate that there is a problem with the tool, or a problem with the way the user is attempting to operate the tool.

Referring back to decision step **304**, if the first signal from the cam has occurred, then the logic flow is directed to a step **306** that turns off the solenoid. This will allow the latch **120** to engage the teeth **92** of the driver **90**, in case there has been some type of jam, or other type of unusual operation while the driver and piston are being lifted. It also allows the latch **120** eventually to properly engage the bottom-most tooth **126** of the driver, which is the normal operation once the driver and piston have been raised to their top-most (or firing) position.

The logic flow is now directed to a decision step **320** that determines whether a second signal has been received from the cam limit switch. If the answer is NO, then the logic flow is directed to a decision step **322** that determines whether or not the motor run timer has timed out. If the answer is NO, then the logic flow is directed back to decision step **320**. On the other hand, if the motor timer has timed out, the logic flow is directed to a step **324** that directs the logic flow to the "STOP" routine at **370**, and indicates that there is some type of problem.

Once decision step **320** determines that the second signal from the cam has been received, then the logic flow is directed to a step **330** that turns off the motor, then to a step **332** that starts a "reset" timeout referred to as "all switches on." In this mode, it is either assumed that both the actuation (input) devices are still actuated, or at least that the controller needs to make an examination of those input devices to see what the proper status of the tool should be. Accordingly, the logic flow is directed to a decision step **340** that determines if the safety is still actuated. If the answer is NO, then the logic flow is directed to a step **342** that then sends the logic flow to the "FIRST 1" routine at step **220** on FIG. **13**. On the other hand if the safety is still actuated, the logic flow is directed to a decision step **350** that determines if the trigger is still pulled. If the answer is NO, then the logic flow is directed to a step **352** that also directs the logic flow to the "FIRST 1" step at **220** on FIG. **13**. Finally, if the trigger is still pulled, then a decision step **360** determines whether or not a "reset" timeout has occurred, and if the answer is YES, the logic flow is directed to a step **362** that sends the logic flow to the "STOP 1" routine at step **380** on FIG. **15**. If the reset timeout has not yet occurred at step **360**, then the logic flow is directed back to the decision step **340** and the inspection of all of the switches will again be performed.

The logic flow is continued on FIG. **15**, in which there are two different types of stop routines. The routine called "STOP" at step **370** will first turn off the motor at a step **372**, turn off the solenoid at a step **374**, and turn off the work light at a step **376**. The STOP routine will then clear the timers at a step **378**. The logic flow then becomes a "DO-Loop," and continues back to the STOP routine at step **370**. This is a fault mode, and the tool must be inspected. As a minimum, it needs to be reset to terminate the DO-Loop processing of the software, which means that the battery must be disconnected from the tool. If the user has been using the tool properly, this may be an indication that there is some operational problem with the tool itself, or that a fastener perhaps has jammed somewhere in the tool and the operator did not notice that fact.

The other type of STOP routine is the "STOP 1" routine at step **380**. Once that occurs, a step **382** turns off the motor, turn off the solenoid at a step **384**, and turn off the work light at a step **386**. The STOP 1 routine will then clear the timers at a step **388**, and a decision step **390** determines whether or not the trigger is still pulled. If the answer is YES, then the logic flow is directed back to the STOP 1 routine at step **380**. If the trigger is not pulled at step **390**, the logic flow is then directed to a decision step **392** that determines if the safety is still actuated. If YES, the logic flow is directed back to the STOP 1 routine at step **380**. However, if the safety is not actuated, the logic flow is directed to a step **398** that sends the logic flow to the "FIRST 1" routine at step **220** on FIG. **13**. At this point, the tool has been successfully used, and is ready for the next firing (driving) actuation.

Referring now to FIG. **16**, a second embodiment of a fastener driving tool is generally designated by the reference numeral **401**. Tool **401** is mainly designed to linearly drive fasteners such as nails and staples. Tool **401** includes a handle portion **403**, a fastener driver portion **405**, a fastener magazine portion **407**, and a fastener exit portion **409**.

A "right" outer cover or "housing" of the driver portion is indicated at **411**. A "top" cover is indicated at **412**, while a "front" outer cover of the driver portion is indicated at **413**. A "rear" cover for the handle portion is indicated at **415** (which is also the battery pack cover), while a "rear" cover of the magazine portion is indicated at **416**. It will be understood that the various directional nomenclature provided above is with respect to the illustration of FIG. **16**, and the second embodiment fastener driving tool **401** can be used in many other angular positions, without departing from the principles of the present invention.

The area of the second embodiment tool **401** in which a fastener is released is indicated approximately by the reference numeral **417**, which is the "bottom" of the fastener exit portion of tool **401**. Before the tool is actuated, a safety contact element **418** extends beyond the bottom **417** of the fastener exit, and this extension of the safety contact element is depicted at **419**, which is the bottom or "front" portion of the safety contact element. Other elements that are depicted in FIG. **16** include an upper guide body **421** and a front cover **423**; the upper guide body generally is in mechanical communication with the magazine portion **407**.

Reference numeral **445** indicates a magazine housing, while reference numeral **447** indicates a fastener track through which the individual fasteners run while they remain within the magazine portion **407**. A feeder carriage **448** (see FIG. **18**) is used to feed an individual fastener from the magazine into the drive mechanism area, and a back plate **449** is used to carry an individual fastener while it is being driven. In the illustrated embodiment, the feeder carriage **448** positions a fastener to a position within the upper guide body **421** that is coincident with the path of the driver member **490** (see FIG. **20**), so that when the driver **490** moves through a driving stroke, its driving end will basically intercept the fastener and carry that fastener to the exit end of the tool **401**, essentially at the bottom portion **417** of the tool's exit area.

The second embodiment fastener driving tool **401** also includes a motor **427** (see FIG. **17**) which acts as a prime mover for the tool, and which has an output that drives a gearbox **428** (see FIG. **17**). An output shaft **429** (see FIG. **17**) of the gearbox drives a lifter drive shaft **402** (see FIG. **27**). A solenoid **431** (see FIG. **17**) is included in tool **401**, and further details of its operation are discussed below. A battery **433** is attached near the rear of the handle portion **403**, and this battery provides electrical power for the motor **427** as well as for a control system.

A printed circuit board (see FIG. **17**) that contains a controller is generally designated by the reference numeral **435**, and is placed within the handle portion **403** in this embodiment. A trigger switch **437** (see FIG. **17**) is activated by a trigger actuator **439**. As can been seen by viewing FIG. **16**, the handle portion **403** is designed for gripping by a human hand, and the trigger actuator **439** is designed for linear actuation by a person's finger while gripping the handle portion **403**. Trigger switch **437** provides an input to the control system **435**.

A three-position selector switch, acting as a "mode" control switch, is mounted on tool **401** at **441**. This switch **441** allows the user (the tool's operator) to select an operating "Mode A" or an operating "Mode B", or to turn the tool OFF. These operating modes are described in detail below, and in conjunction with logic flow charts in the drawings.

There also are one or more light-emitting diodes (LEDs) **443** mounted on tool **401**, which provides an indication as to certain functions of the tool. This is described below in greater detail, in the description of the logic flow charts. There are also other input devices for the controller, however those input devices are not seen in FIG. **16**.

The controller at **435** will typically include a microprocessor or a microcomputer device that acts as a processing circuit. At least one memory circuit will also typically be part of the controller, including Random Access Memory (RAM) and Read Only Memory (ROM) devices. To store user-inputted information (if applicable for a particular tool model), a non-volatile memory device would typically be included, such as EEPROM, NVRAM, or a Flash memory device.

Referring now to FIGS. **19** and **20** (which are similar to FIGS. **2** and **3**), a working cylinder subassembly is designated by the reference numeral **453**, and this is included as part of the fastener driver portion **405**. The working cylinder **453** includes a cylinder wall **451**, and within this cylinder wall **451** is a movable piston **458**. Further details of this piston arrangement are illustrated in FIG. **28**, described below. Surrounding the cylinder wall **451**, in the illustrated second embodiment, is a main storage chamber **454** (also sometimes referred to herein as a "pressure vessel storage space") and an outer pressure vessel wall **456** (which corresponds to the "front" cover **413** of FIG. **16**, along the right portion of this view). At the top (as seen in these views) of the fastener driver portion **405** is an upper end portion at **455** for the cylinder mechanism.

Also within the fastener driver portion **405** are mechanisms that will actually drive a fastener into a solid object. This includes a driver **490**, a cylinder "venting chamber" **492** beneath the piston **458** (which would typically always be at atmospheric pressure), a driver track (not seen in this view; however, see FIG. **21** at **494**), a rotary-to-linear lifter **400**, and a latch **420**. The driver **490** is also sometimes referred to herein as a "driver member" and the rotary-to-lifter **400** is also sometimes referred to herein as a "lifter member," or simply as a "lifter." Driver **490** is rather elongated, and as an individual element can best be seen in FIGS. **23** and **24**. There are multiple "teeth" **491** that are positioned along the driver. In the illustrated embodiment, these teeth **491** are spaced-apart not only in a transverse direction from the elongated centerline of driver **490**, but they are also spaced-apart from one another along the outer longitudinal edges of the driver **490**. The positions of teeth **491** are clearly illustrated in FIG. **24**.

It will be understood that the precise positions for the teeth **92** and **491** could be different from those illustrated for the driver **90** or **490**, without departing from the principles of the present invention. It will also be understood that the precise shapes of teeth **92** and **491** could be different from those illustrated for the driver **90** or **490**, without departing from the principles of the present invention. It will be further understood that the longitudinal edges of the driver elements **90** and **490** do not necessarily have to be linear or straight, although a straight edge is probably the simplest to construct and use. Moreover, the longitudinal edges of the driver elements **90** and **490** do not necessarily need to be parallel to one another, or parallel to the longitudinal axis of the driver itself, although again, such parallel construction is probably the simplest to build and use.

There is a cylinder base **493** that mainly separates the gas pressure portions of the fastener driver portion **405** from the mechanical portions of that driver portion **405**. The venting of air from the cylinder venting chamber **492** passes through the cylinder base **493**, as seen at a vent **450** on FIG. **20**. The mechanical portions of FIG. **20** begin with a rotary-to-linear lifter **400** which was briefly mentioned above, along with a lifter drive shaft **402**. Drive shaft **402** protrudes through the center portions of the fastener driver portion **405** and through the center of the lifter **400**, and this shaft is used to rotate the lifter, as desired by the control system. (See also FIG. **27**.)

Lifter **400** can be designed with an entirely circular outer perimeter, or it can have a different shape. In the first embodiment of FIGS. **1-12**, lifter **100** was arcuate and portions of its perimeter exhibited an eccentric shape of a cam (see FIG. **2**). A portion of the lifter's outer perimeter was mainly circular for about half of a circle (designated by the reference numeral **116**), but the other half of the lifter's outer perimeter was more eccentric, which provided an elliptical surface (designated by the reference numeral **110**). In the second embodiment of FIGS. **16-29**, the outer shape of lifter **400** is still illustrated as half-circular and half-eccentric. However, it will be understood that the lifter's exact outer shape is not important, so long as it provides a base to hold in place certain protrusions (or "pins") that will make physical contact with teeth on the driver **490**, but in a manner that creates a discontinuous contact surface with those teeth. This will be discussed below in greater detail. (See, for example, FIGS. **30-33**.)

The rotary-to-linear lifter **400** includes three cylindrical protrusions (or "extensions") that will also be referred to herein as "pins." The first such pin ("pin 1") is designated **404**, the second pin ("pin 2") is designated **406**, while the third pin ("pin 3") is designated **408**. (See, FIG. **29**.) These pins are mainly not visible on FIG. **19**, since they face away from the viewer of this FIG. **19**.

It should be noted that FIGS. **19** and **20** do not show a "boss portion" of the three pins **404**, **406**, and **408**, (as did pins **104**, **106**, and **108** on FIG. **3**), since such boss portions of the pins **404**, **406**, **408** are not entirely necessary for the proper functioning of the rotary-to-linear lifter **400**. Instead, the surface of the lifter **400** may be perfectly smooth (e.g., flat) at those locations rather than exhibiting a "boss."

It should be understood that the "working side" of these three pins **404**, **406**, and **408** is on the opposite side of the lifter **400** in the view of FIG. **20**. When discussing these pins **404**, **406**, and **408** with respect to FIG. **20** in this written description, it is with reference to the non-protruding side of those pins; however, the effects of the "working side" of those pins is discussed in some detail with respect to other structures that are also illustrated on FIGS. **20-25**.

It should also be noted that pins **404**, **406**, and **408** are illustrated as having circular cross-sectional shapes, which is desirable for this embodiment, although other cross-sectional shapes could instead be used without departing from the principles of the present invention. For example, the pins could have a smooth arcuate outer surface along the portions that will come into contact with the protrusions or "teeth" of the lifter **490**, and the remaining portion of the outer surface of the pins could exhibit a sharp angular cut-off edge, that for example, would have the appearance of a slice of pie. This alternative shape can apply both to the pins **104**, **106**, and **108** of the first embodiment and to the pins **404**, **406**, and **408** of the second embodiment, without departing from the principles of the present invention. Moreover, the pins do not necessarily need to protrude from the lifter surface at right angles.

In the first embodiment of FIGS. **1-12**, there was a fourth cylindrical pin ("pin 4") that protruded from the opposite side of the lifter **100**, designated pin **114**. In this second embodiment of FIGS. **16-29**, there is no fourth pin at all. Instead a small permanent magnet at **414** is placed in the lifter **400**. A Hall effect sensor (described below) is used to sense the movements of this magnet **414**, and thus the movements of lifter **400**.

The latch **420** that was briefly noted above is depicted on FIG. **20**, and has a latch shaft **422** protruding therethrough, and this shaft rotates the latch **420** as determined by the controller. Latch **420** includes a latch "catching surface" at **424** (see FIG. **22**), and this will be more fully explained below.

In FIG. **19**, the piston **458** depicted at or near its uppermost or top-most position (in this view), and a gas pressure chamber **457** can be seen above the top-most area of the piston, near the top piston seal **482** (see FIG. **28**). It will be understood that the gas pressure chamber **457** and the main storage chamber (or storage space) **454** are in fluidic communication with one another. It will also be understood that the portion to the interior of the cylinder wall **451** forms a displacement volume that is created by the stroke of the piston **458**. In other words, the gas pressure chamber **457** is not a fixed volume, but this chamber will vary in volume as the piston **458** moves up and down (as seen in FIGS. **19** and **20**). As noted above, this type of mechanical arrangement is often referred to as a "displacement volume," and that terminology will mainly be used herein for this non-fixed volume **457**.

In FIG. **20**, the piston **458** is piston is depicted at or near its bottom-most travel position (in this view), and a gas pressure chamber **457** can be seen above the top-most area of the piston. It will be understood that the gas pressure chamber **457** and the main storage chamber (or storage space) **454** are in fluidic communication with one another. It will also be understood that the portion to the interior of the cylinder wall **451** forms a displacement volume that is created by the stroke of the piston **458**. In other words, the gas pressure chamber **457** is not a fixed volume, but this chamber will vary in volume as the piston **458** moves up and down. This type of mechanical arrangement is often referred to as a "displacement volume," and that terminology will mainly be used herein for this non-fixed volume **457**.

It will be further understood that the main storage chamber **454** preferably comprises a fixed volume, which typically would make it less expensive to manufacture; however, it is not an absolute requirement that the main storage chamber actually be of a fixed volume. It would be possible to allow a portion of this chamber **454** to deform in size and/or shape so that the size of its volume would actually change, during operation of the present invention, without departing from the principles of the present invention.

In the illustrated embodiment for the second embodiment fastener driving tool **401**, the main storage chamber **454** substantially surrounds the working cylinder **453**. Moreover, the main storage chamber **454** is annular in shape, and it is basically co-axial with the cylinder **453**. This is a preferred configuration of the illustrated second embodiment, but it will be understood that alternative physical arrangements could be designed without departing from the principles of the present invention.

For example, FIG. **34** illustrates a fastener driver mechanism **714** in which a main storage chamber **774** is not co-axial with a working cylinder **771** of the fastener driving tool, which is generally designated by the reference numeral **710**. In other words, storage chamber **774** does not substantially surround the working cylinder **771**, and instead is located off to one side of this working cylinder. This arrangement allows for various physical component arrangements of the tool **710**, and offers a different possible center of mass, which might be advantageous for some special applications.

In FIG. **34**, the main storage chamber **774** has an outer pressure vessel wall **778**, and the working cylinder **771** has a cylinder wall **770**. These two spaces **774** and **771** are pneumatically in communication with one another by way of a passageway **752**, near the top (in this view) of the working cylinder, at **772**. Within cylinder wall **770** is a movable piston **780** (not visible in this view), which can be constructed in a similar manner to the movable piston **458** illustrated in FIG. **28**, described above. Also within the fastener driver portion **714** is a driver member **790** (not visible in this view), which can be constructed in a similar manner to the driver **490** illustrated in FIGS. **23** and **24**, and described above.

A cylinder base **796** separates the gas pressure portions of the fastener driver portion **714** from the mechanical portions of that fastener driver portion **714**. The tool **710** can include a handle portion (not shown), a fastener magazine portion **407** (not shown), and a fastener exit portion **718**. The remaining parts of tool **710** can be very similar, or identical, to other parts of the second embodiment tool **401**, illustrated in FIGS. **16-29**.

Referring again to FIG. **20**, the piston **458** is depicted near or at its bottom-most travel position, and in this configuration, the displacement volume **457** and the main storage chamber **454** are at their largest combined volumes, while the cylinder venting chamber **492** is at its minimum volume. This bottom position is also sometimes referred to herein as the "driven position." In FIG. **20**, movable piston **458** is now in contact with the stationary piston stop **463**, which is why the cylinder venting chamber **492** is at its minimum (or zero) volume. In FIG. **20**, the driver **490** is also at its bottom-most travel position, and its lower-most tip can be seen extending out the exit port at the bottom of a lower guide body **425**.

In FIG. **20**, the rotary-to-linear lifter **400** and the latch **420** are in their respective positions at the end of a firing (driving) stroke, and the latch **420** has its latching surface **424** in a location that will not interfere with the teeth **491** of the driver **490**. This is necessary so that the driver **490** can make a driving stroke from its top-most position to its bottom-most position (see also, FIG. **22**). However, the latch **420** will later be slightly rotated by the latch shaft **422** (which is spring-loaded) so that its catching surface **424** will be able to interfere with the teeth **491**.

In the configuration depicted on FIG. **20**, the fastener driving tool **401** has been used to drive a fastener, and the tool now must cause the driver **490** to be "lifted" back to its top-most position for a new firing (driving) stroke. This is accomplished by rotating the lifter **400**, which is actuated by the motor **427**, through its gearbox **428**, etc.

As rotary-to-linear lifter **400** rotates counterclockwise (as seen in FIG. **20**) at least one of its pins **404**, **406**, or **408** will come into contact with one of the teeth **491** along the left side (as seen in FIG. **20**) of the driver **490**. This will cause the driver **490** to be "lifted" upward (as seen in FIG. **20**) in a "return" stroke. As the lifter **400** rotates, one of the teeth **491** will be in contact with one of the rotating pins **404**, **406**, **408** throughout a portion of the rotational travel of the lifter, and the "next" pin will then come into contact with the "next" tooth **491** so that the driver **490** continues to be moved upward. This lifting procedure will continue until the controller determines that the driver has been moved to its proper position for a new driving stroke. When this occurs, the latch **420**, which is spring-loaded, will have its latch catching surface **424** in a proper location to "catch" the closest tooth **491** along the right-hand side (as seen in FIG. **20**) of the driver **490**, thereby preventing the driver from falling downward for any significant distance. After this occurs, the "next" lifter pin (which will be the pin **404**) will then come along and again make contact with one of the teeth **491** along the left-hand side (as seen in FIG. **20**) of the driver **490**, thereby continuing to lift the driver toward the top (as seen in FIG. **20**) of the cylinder **453**.

In the illustrated embodiment of the second embodiment fastener driving tool **401**, the rotary-to-linear lifter **400** makes two complete rotations to lift the driver **490** from its bottom-most position to its top-most position. (The upper position is also sometimes referred to herein as the "ready position.") At the end of the second rotation, the parts will be configured as illustrated in FIG. **21**. The piston **458** will again be near the top of the cylinder **453**, and the combined volumes of the main storage chamber **454** and displacement volume **457** have now been reduced to a smaller volume, which means their gases are under a greater pressure, since the gas that was above the piston and in chamber **454** was compressed during the lift of the driver. (As noted above, the actual volume of the main storage chamber **454** does not change in the illustrated embodiment.) During the lift of the driver, the latch **420** was "engaged" with the teeth **491**, however, the latch has a smooth surface in one direction that allows the teeth **491** to push the latch out of the way during the upward lift of the driver. This is much like a ratchet-type action, remembering that the latch is spring-loaded (and thus has a mechanical bias) so as to act in this manner.

At the end of the piston's normal upward movement, the "last" tooth along the right-hand side (as best seen in FIG. **23**) of the driver **490** is engaged with the latch catching surface **424**, and so latch **420** now prevents the driver from being moved downward (as seen in this view). (This is similar to the arrangement of components depicted in FIG. **4**, for the first embodiment.) The third pin **408** is still in contact with the lower-most tooth **491** along the left-hand side of the driver **490**, at this point in the rotational travel of the rotary-to-linear lifter **400**. There is a sensor which, in the illustrated embodiment, is a Hall effect sensor **430** (see FIG. **25**) that detects the rotational movements of the lifter **400**. This sensor detects the magnet **414**, as discussed below in greater detail.

When the sensor **430** detects the magnet **414** a first time (in this second embodiment), the control system turns off the solenoid **431**, which will then allow the latch **420** to engage the right-hand teeth (in these views) of the lifter **400**. Note that the solenoid can also be turned off earlier during the lift, if desired. When sensor **430** detects this magnet **414** a second time (in the second embodiment), the current to the motor **427** is turned off, and the motor thus is de-energized and stops the lifting action of the driver **490**. As described herein, the solenoid **431** acts as a latch actuator.

In the second illustrated embodiment tool **401**, the latch surface **424** is not in contact with the driver teeth **491** when the driver **490** has been moved to its "ready" position. In this second illustrated embodiment, the gearbox **428** has an attribute by which it essentially is self-locking from its output side (i.e., from its output shaft **429**), and this prevents the lifter **400** from allowing the driver **490** to move "backward," which is the "down" direction in FIG. **21**. Therefore, the driver/piston subassembly will not drift downward a small distance, and thus, the driver teeth **491** do not come into contact with the latch, even in view of the gas pressure above piston **458** (in the space **457**).

At the "ready" position for the driver **490**, the latch **420** may be positioned such that it would interfere with the driver teeth **491** (i.e., in an "interfering position") as a safety feature (i.e., in which the latch surface **424** would "catch" the teeth **491** of the driver **490**, if the driver somehow would move downward). However, the gearbox/lifter combination does not allow the "last tooth" **426** to contact that latch **420** at this point in the tool's operation.

This is the position illustrated in FIG. **21** of the second embodiment tool, and this configuration is considered to be the "rest" position of the tool **401**. Although the gas pressure in the combined main storage chamber **454** and displacement volume **457** is at its maximum, the gearbox prevents the driver **490** from being moved further downward (in this view), so the piston/driver combination is essentially locked in this position until something else occurs. In a preferred mode of the invention, the pressure vessel may be pressurized at about 130 PSIG to 140 PSIG, just before a driving stroke.

It should be noted that, for the second embodiment tool **401**, the gearbox can be of yet another alternative construction. For example, instead of being self-locking from its output side, a "regular" gearbox could be used if provided with a "one-way" feature, such as an adjacent one-way clutch (or a one-way clutch constructed therewithin). In this

manner, the driver **490** would still be prevented from moving down (in FIG. **21**) and contacting the latch surface **424**, just before a driving stroke.

When it is time to drive a fastener, the next action in the illustrated second embodiment is to cause the motor **427** to become energized once again, so that the lifter **400** rotates further in its original direction. This occurs by two independent actions by the user: in some modes of the invention, these two independent actions can occur in either order. (There is also an optional "restrictive mode" of operation, in which the two independent actions must occur in a specific order.) These two actions are: pressing the nose **419** of the safety contact element **418** against a solid surface, and depressing the trigger actuator **439**. The trigger actuator will cause the trigger switch **437** to change state, which is one condition that will start sending current to the motor **427**. The safety contact element **418** has an upper arm **434** (see FIG. **25**) that will be moved as the nose **419** is pushed into the tool **401**, and this upper arm **434** will actuate another sensor which, in the illustrated embodiment, is a small limit switch **432** (see FIG. **25**).

When both of these actions occur simultaneously, current is delivered to the motor **427** which will once again turn the rotary-to-linear lifter **400** a short distance. Also, the controller energizes the solenoid **431**, which rotates the latch **420** a small angular distance clockwise (as seen in FIG. **20**) to move the latch catching surface **424** from an interfering position, so that the latch will not prevent the driver **490** from moving downward when it is correctly time for a driving stroke. Therefore, the "last" tooth **426** of driver **490** (as seen in FIGS. **21** and **22**) would not "catch" on this latch catching surface. Note that FIGS. **23** and **24** show details of the same structure depicted in FIG. **22** at different perspective angles.

Now that all this has occurred, the latch **420** is in its disengaged position so that its catching surface **424** will not interfere with any of the teeth **491** along the right-hand side (as seen in FIG. **20**) of the driver **490**; and none of the three "working" pins of the lifter **400** will interfere with those left-hand teeth **491**. Once the driver tooth **491** "drops off" the last lifting pin **408**, the driver **490** is quickly thrust downward in a driving stroke, due to the high gas pressure within the main storage chamber **454** and displacement volume **457**. (This is the "gas spring" effect.) Along the way, the driver **490** will pick up a fastener that is waiting at the feeder carriage **448**, and drive that fastener along the back plate **449** to the exit area at the bottom (at the area **417** on FIG. **16**). After this action has occurred, the driver **490** will be situated at its lower-most position, as viewed in FIG. **20**.

The pressure of the gas in the combined main storage chamber **454** and displacement volume **457** is sufficiently high to quickly force the driver **490** downward, and such pneumatic means is typically much faster than a nail driving gun that uses exclusively mechanical means (such as a spring) for driving a fastener. This is due to the "gas spring" effect caused by the high gas pressure within the main storage chamber **454** and displacement volume **457** that, once the driver is released, can quickly and easily move the driver **490** in a downward stroke.

As the driver **490** is being moved downward, the piston **458** and the movable piston stop **459** are forcing air (or possibly some other gas) out of the cylinder venting chamber **492** that is below the piston. This volume of air is moved through a vent to atmosphere **450**, and it is desired that this be a low resistance passageway, so as to not further impede the movement of the piston and driver during their downward stroke. The gas above the piston is not vented to atmosphere, but instead remains within the displacement volume **457**, which is also in fluidic communication with the main storage chamber **454**.

One aspect of the present invention is to provide a rather large storage space or volume to hold the pressurized gas that is also used to drive the piston downward during a driving stroke of the driver **490**. There is a fluidic passage **452** between the upper portion of the cylinder and the main storage chamber **454**. (In the illustrated second embodiment, the cylinder wall **451** does not extend all the way to the top end region **455**.) It is preferred that the volume of the main storage chamber be larger than the total volume of the cylinder working spaces (i.e., the displacement volume) by a volumetric ratio of at least 2.0:1, and more preferably at least 3.0:1. This will allow for a powerful stroke, and a quick stroke; moreover, it provides for an efficient operating air spring.

The illustrated second embodiment of the present invention allows for both a quick firing (or driving) stroke time and also a fairly quick "lifting" time to bring the driver back to its upper position, ready for the next firing (driving) stroke. Both of these mechanical actions can sequentially occur in less than 340 milliseconds (combined time), and allow a user to quickly place fasteners into a surface. In one operating mode of the present invention, the human user can hold the trigger in the engaged position and quickly place a fastener at a desired location merely by pressing the nose (or "bottom") of the tool against the working surface to actuate the fastener driver and place the fastener. Then the user can quickly remove the fastener driver tool from that surface, and move it to a second position along the work surface, while still depressing the trigger the entire time, and then press the nose (or bottom) of the tool against the working surface at a different position, and it will drive a fastener at that "different" position. This is referred to as a "bottom fire" capability, and when using the illustrated embodiment it can occur virtually as fast as a human can place the tool against a surface, then pick up the tool and accurately place it against the surface at a different position, and thereby repeat these steps as often as desired until emptying the magazine of fasteners. This type of mode of operation will be discussed in greater detail below in connection with the logic flow chart starting at FIG. **35**, with respect to the control system of the fastener driving tool **401**.

Referring now to FIG. **25**, another side sectional view is provided that shows some of the elements beneath the latch and other portions of the second embodiment fastener driving tool **401**. There are two limit switches **430** and **432**. The limit switch **430** is a Hall-effect sensor that detects movements of the magnet **414** of the rotary-to-linear lifter **400** (as noted above). The limit switch **432** is a small electromechanical limit switch that detects movement of the upper arm **434**, which is a portion of the safety contact element **418** that is pushed rearward (or "up" in these views) with respect to the overall tool **401** when the nose of the tool is pressed against a working surface. These limit switches provide electrical input signals to the controller, which is discussed below in greater detail. It will be understood that other types of sensors could be used instead of electromechanical limit switches or Hall-effect switches, such as optoelectronic sensors, or magnetic sensors, or even a metal-sensing proximity switch.

Also viewed on FIG. **25** is a return spring **436**, which causes the safety contact element **418** to be pushed back downward (in this view) once the user releases the nose of the tool **401** from the working surface. In addition, there is a depth of drive adjustment at **438**.

As generally indicated on FIG. **26** at a reference numeral **498**, the driver **490** may be driven toward the exit end by a type of driver actuation device other than a gas spring. For example, the driver member **490** could have a top circular area **497** that is forced downward (in this view) by a mechanical spring **496**, which could be a fast-acting coil spring, for example, thereby also causing driver **490** to move downward (in this view). Or an alternative driver actuation device could use a different type of mechanical force, for example, applied by compressed foam (in the area at **498**). In such alternative embodiments, there would be no need for a cylinder at all, and instead the spring **496** (or other device at **498**) would merely need a mechanical guide to keep it moving in a correct motion.

Further alternative ways to force the driver **490** of FIG. **26** to move in a driving stroke toward the exit end are the use of a fast-acting motor, or the use of a compressed gas valve (releasing compressed air into a cylinder against, for example, a piston **458** instead of the circular area **497**), or perhaps a pressurized liquid valve (releasing pressurized hydraulic fluid into a cylinder against the piston **458**, for example). If a piston **458** is used with compressed gas or pressurized liquid, then a cylinder (not shown) would also be added to the unit of FIG. **26**, instead of merely using a mechanical guide.

Referring now to FIG. **27**, further details of the solenoid are viewed. In FIG. **27**, the solenoid **440** has a plunger **442** that will move linearly either in or out from the main coil body of the solenoid **440**. When the solenoid is energized, it pulls the plunger **442** in toward the solenoid body **440**, which rotates a solenoid arm **446** (part of the solenoid's "linkage"), which in turn rotates the latch shaft **422** that also rotates the latch **420** a small arcuate distance. This causes the latch **420** to disengage from an interfering position with the driver **490**. On the other hand, when the solenoid **440** becomes de-energized, the plunger will be pushed out by the plunger spring **444**, which will rotate the solenoid arm **446** a short distance, and that in turn rotates the latch shaft **422** and the latch **420**. This will tend to cause the latch to engage the teeth **491** along the right-hand side (as seen in FIG. **20**) of the driver **490**. However, since this is a spring action, the teeth **491** can slide against the surface of the latch **420** and move the latch out of the way if the teeth are attempting to move upward along with the driver **490**. However, the spring action of the solenoid plunger spring will be strong enough to push the latch **420** into its engaged position, and any teeth **491** attempting to move downward will be caught by the catching surface **424** of the latch **420**.

This "catching" action of the latch **420** has more than one benefit. In the first place, the latch remains in its interfering position as the piston **458** is lifted to its top or "firing" position. The driver **490** cannot be fired until the latch **420** is moved out of the way, as discussed above. On the other hand, if there is some type of jam or an improper use of the tool by a user such that the driver **490** does not totally complete its travel during a firing (driving) stroke, the latch **420** will also prevent a misfire from occurring at an inconvenient time.

More specifically, if the driver jams during a driving stroke, and if a person tries to clear the jam, and if there was no precaution taken to prevent the remainder of the stroke from occurring at that moment, then possibly an injury could occur when the driver **490** suddenly becomes released from its jammed condition. In other words, a fastener could be driven during the attempt to clear the jam, and that fastener would likely be directed somewhere that is not the original target surface. In the present invention, the latch **420** will have its solenoid **440** become de-energized once the jam occurs (because solenoid **440** will de-energize after a "timeout" interval occurs), and therefore the latch **420** will be engaged and the catching surface **424** will be in a position to interfere with the downward movement of the driver teeth **491**. By use of this configuration, the driver could only move a short distance even if the jam was suddenly cleared, because the latch catching surface **424** will literally "catch" the "next" tooth **491** that unexpectedly comes along during a downward travel of the driver **490**. This makes the tool much safer in situations where a complete driving stroke has not occurred.

The process for controlling the solenoid and the moments when the solenoid will either be energized or de-energized are discussed below in connection with the flow chart that begins on FIG. **35**.

It will be understood that the latch **120** or **420** could be controlled by a device other than a solenoid, without departing from the principles of the present invention. For example, the solenoid **140** or **440** could be replaced by motor, or some type of air or hydraulic valve, if desired. Moreover, the latch action could be linear rather than rotational (pivotable), if desired.

With respect to various types of firing (or driving) modes, a "trigger fire" mode is where the user first presses the tool nose against a working surface, and then depresses the trigger actuator **439**. It is the trigger being depressed that causes the driving stroke to occur in this situation. With respect to a "bottom fire" mode, the trigger is actuated first, and then the user presses the nose of the tool against a work surface, and it is the work surface contact that causes the driving stroke to occur. As discussed above, the user can continue to hold the trigger down while pressing against and releasing the tool from the work surface multiple times, and obtain quick multiple firing strokes (or driving strokes), thereby quickly dispensing multiple fasteners into the working surface at various locations.

There is also an optional "restrictive firing mode," in which the nose of the tool must be first placed against a working surface before the trigger is pulled. If the sequence of events does not unfold in that manner, then the driving stroke will not occur at all. This is strictly an optional mode that is not used by all users, and certainly in not all situations.

With regard to alternative embodiments of the present invention second embodiment, an exemplary fastener driving tool can be made with a main storage chamber volume of about 11.25 cubic inches and a cylinder displacement volume of about 3.75 cubic inches. This would provide a volumetric ratio of the main storage chamber versus the displacement volume of about 3.0:1. As discussed above, it is desirable for the volumetric ratio of the main storage chamber's volume to the displacement volume to be at least 2.0:1, and it could be much higher if desired by the fastener driving tool's designer.

The working pressure in the system could be around 120 PSIG, and should probably be at least 100 PSIG for a quick-firing tool. By the term "working pressure" the inventors are referring to the pressure in the displacement volume **457** (and main storage chamber **454**) at the time the piston **458** is at its "ready" position, which is when it is at (or proximal to) its uppermost travel position.

It should be noted that other gases besides air can be used for the main storage chamber and the displacement volume, if desired. While air will work fine in many or most applications, alternative gases could be used as the "charge gas," such as carbon dioxide or nitrogen gas. Moreover, the

use of nitrogen gas can have other benefits during the manufacturing stage, such as for curing certain adhesives, for example.

In the illustrated second embodiment, there is no fill valve on the fastener driving tool **401** at the storage tank (main storage chamber) **454**. This is a preferred mode of the present invention, although an optional fill valve could be provided, if desired by a tool designer. The design of the preferred mode of the present invention is such that the charge gas should not significantly leak from the tool, and therefore a fill valve would not be required.

Another feature of the present invention is that a variable stroke is possible by causing the rotary-to-linear lifter **400** to be rotated a multiple number of times to create a shorter or longer firing (driving) stroke, if desired. In the illustrated second embodiment, the lifter **400** makes a complete rotation two times to lift the piston from its lower-most position to its top-most position. This number of rotations of the lifter could be increased to three times or four times if desired, or even could be decreased to a single turn for a shorter stroke tool, if desired.

Another possible variation is to use a composite sleeve for the internal cylinder wall **451**, which would make contact with the seals of the piston **458**. In addition, the outer pressure vessel wall **456** could also be made of a composite material, if desired. The use of a carbon fiber composite, for example, would decrease weight, but would maintain the desired strength.

Referring now to FIG. **28**, some of the details of the piston arrangement are illustrated in cross-section for the second embodiment **401** of the present invention. This piston is designated by the reference number **458**. There are upper and lower seals at **482** and **484**, respectively. Between these seals is an annular space **486** that is at least partially filled with lubricating fluid, such as oil. This oil will tend to lubricate the movements of the piston **458** along the inner surface of the cylinder wall **451**. Part of the piston mechanism of this embodiment includes a piston scraper **489**.

The seals **482** and **484** are designed to hold the oil **488** within the annular space **186** indefinitely, or at least to lose the oil only at a very slow rate. In a preferred mode of the invention, the seals have a "slick" coating material to provide a long operational life. In the illustrated embodiment, an exemplary material for this coating is XYLAN™, which is a TEFLON™ material that includes molybdenum powder.

The driver element **90** of tool **10** and the driver element **490** of tool **401** both retract into their respective working cylinder areas **71** and **453**. This is a unique arrangement, in that some of the driver's latching protrusions (or "teeth") **92** and **491** also retract into the working cylinder areas **71** and **453**. This is made possible by the positioning of the respective lifters **100** and **400**, and by the shapes of the driver elements **90** and **490**, and also by the sealing arrangement of the pistons **80** and **458**, discussed in the previous paragraphs.

It will be understood that the fastener magazine portion **16** of tool **10** and the fastener magazine portion **407** of the tool **401** are essentially optional features. In other words, the fastener driving tools **10** and **401** could be constructed to act as "single-shot" devices, and no magazine would be provided for such a tool. Alternatively, the tools **10** and **401** could be provided with a standard detachable magazine, but the tools themselves could also be constructed to work in a "single-shot mode" such that a single fastener is placed in the tool **10** or **401**, near its front end or tip (e.g., near **30**) and that single fastener is then driven by tool **10** or **401**. In this mode, the magazine **16** or **407** could be dismounted from the tool **10** or **401** during the single-shot procedure; later, the magazine **16** or **407** could be re-mounted to the tool **10** or **401**, and the collated fasteners in the magazine could then be driven by the tool, as desired by the user.

Referring now to FIG. **30**, an alternative embodiment rotary-to-linear lifter is illustrated, generally designated by the reference numeral **460**. Lifter **460** has only a single protrusion (or "pin") at **462**, and the lifter **460** rotates about a pivot axis at **461**. The outer perimeter shape of lifter **461** is mainly arcuate at **464**, and only comprises a small sector of a full circle. Yet lifter **460** can achieve the goals of the present invention, in that its protrusion **462** will provide a discontinuous contact surface with the "teeth" of a driver element, such as the driver **90** or driver **490**. Lifter **460**, having only a single "pin" would need to rotate more quickly that the other lifters **100** and **400**, described above and in the drawings showing the first and second embodiments of a tool **10** or **401** (assuming that it was attempting to lift a driver having the same size and shape, and "teeth" spacings, as those previously described drivers).

Referring now to FIG. **31**, another alternative embodiment rotary-to-linear lifter is illustrated, generally designated by the reference numeral **465**. Lifter **465** has two protrusions (or "pins") at **467** and **468**, and the lifter **465** rotates about a pivot axis at **466**. The outer perimeter shape of lifter **465** has a very irregular geometric shape at **469**. Yet lifter **465** can achieve the goals of the present invention, in that its protrusions **467** and **468** will provide a discontinuous contact surface with the "teeth" of a driver element, such as the driver **90** or driver **490**. Lifter **465**, having only two "pins" would need to rotate more quickly that the other lifters **100** and **400**, described above and in the drawings showing the first and second embodiments of a tool **10** or **401** (assuming that it was attempting to lift a driver having the same size and shape, and "teeth" spacings, as those previously described drivers).

Referring now to FIG. **32**, yet another alternative embodiment rotary-to-linear lifter is illustrated, generally designated by the reference numeral **470**. Lifter **470** has three protrusions (or "pins") at **472**, **473**, and **474**, and the lifter **470** rotates about a pivot axis at **471**. The outer perimeter shape of lifter **471** has a very regular geometric shape at **475**, which is that of a circle. Yet lifter **470** can achieve the goals of the present invention, in that its protrusions **472**, **473**, and **474** will provide a discontinuous contact surface with the "teeth" of a driver element, such as the driver **90** or driver **490**. Lifter **470**, having three "pins" would need to rotate generally at the same speed as the other lifters **100** and **400**, described above and in the drawings showing the first and second embodiments of a tool **10** or **401** (assuming that it was attempting to lift a driver having the same size and shape, and "teeth" spacings, as those previously described drivers).

Referring now to FIG. **33**, still another alternative embodiment rotary-to-linear lifter is illustrated, generally designated by the reference numeral **480**. Lifter **480** has two protrusions (or "pins") at **482** and **483**, and the lifter **480** rotates about a pivot axis at **481**. The outer perimeter shape of lifter **481** has a very regular geometric shape at **484**, which is that of a square. Yet lifter **480** can achieve the goals of the present invention, in that its protrusions **482** and **483** will provide a discontinuous contact surface with the "teeth" of a driver element, such as the driver **90** or driver **490**. Lifter **480**, having only two "pins" would need to rotate more quickly that the other lifters **100** and **400**, described above and in the drawings showing the first and second embodiments of a tool **10** or **401** (assuming that it was attempting

to lift a driver having the same size and shape, and "teeth" spacings, as those previously described drivers).

Referring now to FIG. **35**, a logic flow chart is provided to show some of the important steps used by a system controller for the fastener driving tool **401** of the second illustrated embodiment for the present invention. Starting at an initializing step **500**, a step **502** loads registers with predetermined values, and a step **504** loads special function registers with predetermined values. A step **506** now "checks" the RAM (Random Access Memory) to be sure it is functioning properly, and then a step **508** clears the RAM. A step **510** now loads unused RAM with predetermined values, based on the software coding for the system controller (typically in firmware or hard-coded).

A step **512** now determines the stability of the system electrical power supply. Then a step **514** causes an electrical output to blink one or more LEDs (light-emitting diodes) **443** on tool **510**, so the user is made aware that the tool **510** has entered its "startup" mode of operation. Step **514** also initializes the interrupts that will be used for the controller, and the controller is now ready to enter into an operational routine.

A decision step **516** now determines if the safety has been actuated (i.e., whether the safety contact element **418** has been pressed against a solid object to an extent that actuates the sensor, e.g., limit switch **432**). Step **516** also determines if the trigger **439** has been pulled. If the answer is YES for either of these questions, then the logic flow is directed to a step **520**. If the answer is NO for both of these questions, then the logic flow is directed to another decision step **518**.

Step **518** determines whether or not the LEDs **443** have flashed a predetermined maximum number of times. If the answer is YES, then the logic flow is directed to step **520**. If the answer is NO, then the logic flow loops back to step **514**.

At a step **520**, the control logic enters a "BEGIN" routine. A decision step **540** now determines whether or not the current operating mode is the "RESTRICTIVE" mode. This determination involves inspecting the current state of the selector switch **441** which, as noted above, has three positions: "Off", "Mode A", or "Mode B". This three-position switch **441** is part of an exemplary arrangement of the second embodiment of the fastener driving tool **401**, and in this description of the second tool embodiment, Mode A and Mode B are also referred to as a "Restrictive Mode," and a "Contact Actuation Mode."

If the current operating mode is not the RESTRICTIVE mode, then the logic flow is directed to a decision step **522**. On the other hand, if the current mode is the RESTRICTIVE mode, then the logic flow is directed to a step **542** in which the tool enters a "restrictive fire" routine. The logic flow is directed now to a decision step **544** that determines if the trigger has been pulled. If the answer is NO, then the logic flow is directed to a decision step **541**. On the other hand, if the trigger has been pulled, then the logic flow is directed to a step **546** that will further direct the logic flow to the "STOP 1" function (or routine) at a step **680** on FIG. **37**. It should be noted that, in the "restrictive fire" mode of operation, the trigger cannot be pulled first; instead the nose of the fastener driving tool must be pushed against the solid surface before the trigger is pulled. In other words, this particular "firing mode" is a predetermined sequential mode of operation (and the term "restrictive fire mode" is also referred to herein as the "sequential mode").

If the logic flow at decision step **544** resulted in a NO result, the logic flow at decision step **541** determines whether or not the safety has been actuated. If the answer is NO, then the logic flow is directed back to the "restrictive fire" routine, just before step **544**. However, if the answer is YES, the logic flow is directed to a step **543**, in which the controller turns on the "work light," which is a small electric lamp (e.g., an LED) that illuminates the workpiece where the fastener is to be driven.

A decision step **545** now determines whether or not a "sequential mode timeout" has occurred, and if the answer is YES, the logic flow is directed to a step **547** that directs the logic flow to the "STOP 1" function at step **680** on FIG. **37**. This temporarily stops the tool from operating. On the other hand, if the timeout has not yet occurred, the logic flow is directed to a decision step **548** that determines whether the trigger has been pulled. If the answer is NO, the logic flow is directed back to the decision step **544**. On the other hand, if the answer is YES, the logic flow is directed to a step **549** that causes the tool to enter the "DRIVE" mode of operation at step **560** on FIG. **36**.

If the answer at step **540** was NO, the decision step **522** now determines whether or not the trigger has been pulled. If the answer is YES, the logic flow is directed to a step **530** in which the logic flow enters a "TRIGGER" routine. A step **531** turns on a "work light," which is the same lamp/LED that was discussed above in reference to step **543**.

A decision step **532** now determines whether or not a predetermined "trigger timeout" has occurred, and if the answer is YES, a step **534** directs the logic flow to a "STOP 1" routine, that is illustrated on FIG. **37** at a step **680**. What this actually means is that a user pulled the trigger, but then did not actually use the tool against a solid surface, and rather than having the tool ready and primed to fire a fastener at any moment for an indefinite period of time, a predetermined amount of time will pass (i.e., the "timeout" interval), and once that has occurred, the system will be basically deactivated in the STOP 1 mode. This is not a permanent stoppage of the functioning of the tool, but is only temporary. Note that the "timeouts" are interrupt driven, in an exemplary embodiment of the present invention.

If the timeout has not occurred at decision step **532**, then a decision step **536** determines if the safety has been actuated. If the answer is NO, then the logic flow is directed back to the BEGIN routine **520**. On the other hand, if the safety has been actuated at step **536**, then the logic flow is directed to a step **538** that will send the logic flow to a "DRIVE" routine, which is on FIG. **36** at a step **560**. This will be discussed below in greater detail.

If, at step **522**, the trigger was not yet pulled, then the logic flow is directed to the decision step **524**. When the logic flow reaches decision step **524**, the logic now determines whether or not the safety has been actuated. This step determines whether or not the safety contact element **418** has been pressed against a solid object to an extent that actuates the sensor (e.g., limit switch **432**), which means that the tool is now pressed against a surface where the user intends to place a fastener. If the answer is NO, the logic flow is directed back to the mode switch query at decision step **540**. However, if the answer is YES, the logic flow is directed to a step **550** in which the controller enters a "SAFETY" routine.

Once at the SAFETY routine at step **550**, a step **551** turns on the "work light," which is the same lamp/LED that was discussed above in reference to step **531**. A decision step **552** now determines whether or not a "safety timeout" has occurred, and if the answer is YES, the logic flow is directed to a step **554** that directs the logic flow to the "STOP 1" function at step **680** on FIG. **37**. This temporarily stops the tool from operating. On the other hand, if the timeout has not

yet occurred, the logic flow is directed to a decision step **556** that determines whether the trigger has been pulled. If the answer is NO, the logic flow is directed back to the decision step **524**. On the other hand, if the answer is YES, the logic flow is directed to a step **558** that causes the tool to enter the "DRIVE" mode of operation at step **560** on FIG. **36**.

As can be seen by reviewing the flow chart of FIG. **35**, unless the tool **401** is in the restrictive fire mode (at step **542**), the tool can be actuated with either one of the two important triggering steps occurring first: i.e., the trigger could be pulled before the safety is actuated, or vice versa.

Referring now to FIG. **36**, the logic flow from FIG. **35** is directed to the "DRIVE" routine **560** from two other steps on FIG. **35**: these are step **538** and step **558**. Once at the DRIVE routine **560**, a switch debounce step **562** is executed to determine whether or not one or both of the triggering elements was somehow only actuated intermittently. If so, the system designers have determined that the tool should not operate until it is more certain that the input switches have actually been actuated. To do this, the logic flow is directed to a decision step **564** to determine if the safety is still actuated. If the answer is NO, then the logic flow is directed to a step **566** that sends the logic flow back to the SAFETY routine at step **550**. On the other hand, if the safety still is actuated at step **564**, then the logic flow is directed to a decision step **570** to determine if the trigger is still being pulled. If the answer is NO, then the logic flow is directed to a step **572** that sends the logic flow back to the TRIGGER routine at step **530**.

On the other hand, if decision steps **564** and **570** are both answered affirmatively, then a step **580** clears the operational timers, and the logic flow is then directed to a decision step **582** that determines if the software code flow is within certain parameters. This is a fault-checking mode of the software itself, and if the system does not determine a satisfactory result, then the logic flow is directed to a step **584** that sends the logic flow to a "STOP" routine at a step **670** on FIG. **37**. This will ultimately turn the tool off and require a safety inspection of the tool, or at least have the tool reset. However, the tool does not need to be completely disabled, and after the safety inspection and tool reset procedure, the tool will be ready to use again without being sent to a service center. In an exemplary mode of the invention, the code flow check step determines if a correct number resides in a register or memory location; this number is the result of being incremented at predetermined executable steps of the software for the system controller.

If the software code flow check is within acceptable parameters at decision step **582**, then the logic flow is directed to a step **590** that turns on the motor, and then a step **592** that turns on the solenoid. A step **594** now starts the solenoid timer and a step **596** now starts the motor run timer. As will be discussed below, these timers will be periodically checked by the system controller to make sure that certain things have occurred while the solenoid is on and while the motor is running Otherwise, after a predetermined maximum amount of time, the motor will be turned off and the solenoid will be turned off due to these timers actually timing out, which should not occur if the tool is being used in a normal operation, and if the tool is functioning normally.

In addition to the solenoid and motor run timers discussed above, a "dwell timer" is used to allow the tool to begin its normal operation before any further conditions are checked. This is accomplished by a decision step **598** on FIG. **36**, which causes the logic flow to essentially wait a short amount of time before continuing to the next logic steps.

Once the dwell timer has finished at step **598**, the logic flow is directed to a decision step **600** that determines if the solenoid "on time" has been exceeded. If the answer is YES, the logic flow is directed to a step **602** that turns off the solenoid. This situation does not necessarily mean the tool is being misused or is not functioning properly, and therefore the logic flow does not travel to a "stop step" from the step **602**. Instead, the logic flow is directed to a decision step **604**, discussed below.

If the solenoid on time has not been exceeded, then the logic flow also is directed to the decision step **604**, which determines if the cam limit switch has received a first signal. This is the Hall effect sensor **430** that detects the presence or absence of the magnet **414** of the lifter. If the tool of the illustrated embodiment is being used, the lifter **410** will make two complete rotations when lifting the driver and piston from their bottom-most positions to their top-most positions. Therefore, the cam limit switch **430** will receive two different signals during this lift. Step **604** determines if the first signal has occurred. If not, then a decision step **610** determines whether the motor timeout has occurred. If the answer is NO, then the logic flow is directed back to decision step **600**. On the other hand, if the motor run timer has indeed timed out, then the logic flow is directed to a step **612** that sends the logic flow to a "STOP" routine at step **670**. This would likely indicate that there is a problem with the tool, or a problem with the way the user is attempting to operate the tool.

Referring back to decision step **604**, if the first signal from the cam has occurred, then the logic flow is directed to a step **606** that turns off the solenoid. This will allow the latch **420** to engage the teeth **491** of the driver **490**, in case there has been some type of jam, or other type of unusual operation while the driver and piston are being lifted. It also allows the latch **420** eventually to properly engage the bottom-most tooth **426** of the driver, which is the normal operation once the driver and piston have been raised to their top-most (or firing) position.

The logic flow is now directed to a decision step **620** that determines whether a second signal has been received from the cam limit switch. If the answer is NO, then the logic flow is directed to a decision step **622** that determines whether or not the motor run timer has timed out. If the answer is NO, then the logic flow is directed back to decision step **620**. On the other hand, if the motor timer has timed out, the logic flow is directed to a step **624** that directs the logic flow to the "STOP" routine at **670**, and indicates that there is some type of problem.

Once decision step **620** determines that the second signal from the cam has been received, then the logic flow is directed to a step **630** that turns off the motor, then to a step **632** that starts a "reset" timeout referred to as "all switches on." In this mode, it is either assumed that both the actuation (input) devices are still actuated, or at least that the controller needs to make an examination of those input devices to see what the proper status of the tool should be. Accordingly, the logic flow is first directed to a decision step **634**, which determines whether the operator mode selector switch **441** is set to the Restrictive Mode, and if not, the logic flow is directed to a decision step **640** (discussed below).

If the answer is YES at step **634**, the logic flow is directed to a decision step **635** that determines whether or not the reset timeout has occurred. If the answer is YES, then the logic flow is directed to a step **636**, and the tool then enters the STOP 1 routine at step **680** on FIG. **37**. If the answer was NO at step **635**, a decision step **637** determines whether or not the safety is still actuated (or "pulled"). If the answer is

YES, then the logic flow is directed back to step **635**; if the answer is NO, the logic flow is directed to a decision step **638** which determines whether or not the trigger is still being pulled. If the answer is YES, then the logic flow is directed back to step **635**; if the answer is NO, the logic flow is directed to a step **639**, and the tool then enters the BEGIN routine at step **520** on FIG. **35**.

Back at step **634**, if the current selector switch mode was not Restrictive, then the logic flow is directed to a decision step **640** that determines if the safety is still actuated. If the answer is NO, then the logic flow is directed to a step **642** that then sends the logic flow to the "BEGIN" routine at step **520** on FIG. **35**. On the other hand if the safety is still actuated, the logic flow is directed to a decision step **650** that determines if the trigger is still pulled. If the answer is NO, then the logic flow is directed to a step **652** that also directs the logic flow to the "BEGIN" step at **520** on FIG. **35**. Finally, if the trigger is still being pulled, then a decision step **660** determines whether or not a "reset" timeout has occurred, and if the answer is YES, the logic flow is directed to a step **662** that sends the logic flow to the "STOP 1" routine at step **680** on FIG. **37**. If the reset timeout has not yet occurred at step **660**, then the logic flow is directed back to the decision step **640** and the inspection of all of the switches will again be performed.

The logic flow is continued on FIG. **37**, in which there are two different types of stop routines. The routine called "STOP" at step **670** will first turn off the motor at a step **672**, turn off the solenoid at a step **674**, and turn off the work light at a step **676**. The STOP routine will then clear the timers at a step **678**. The logic flow then becomes a "DO-Loop," and continues back to the STOP routine at step **670**. This is a fault mode, and the tool must be inspected. As a minimum, it needs to be reset to terminate the DO-Loop processing of the software, which means that the battery must be disconnected from the tool. If the user has been using the tool properly, this may be an indication that there is some operational problem with the tool itself, or that a fastener perhaps has jammed somewhere in the tool and the operator did not notice that fact.

The other type of STOP routine is the "STOP 1" routine at step **680**. Once that occurs, a step **682** turns off the motor, turn off the solenoid at a step **684**, and turn off the work light at a step **686**. The STOP 1 routine will then clear the timers at a step **688**, and a decision step **690** determines whether or not the trigger is still pulled. If the answer is YES, then the logic flow is directed back to the STOP 1 routine at step **680**. If the trigger is not pulled at step **690**, the logic flow is then directed to a decision step **692** that determines if the safety is still actuated. If YES, the logic flow is directed back to the STOP 1 routine at step **680**. However, if the safety is not actuated, the logic flow is directed to a step **698** that sends the logic flow to the "BEGIN" routine at step **520** on FIG. **35**. At this point, the tool has been successfully used, and is ready for the next firing (driving) actuation.

In the above detailed description, there are a number of various timeouts that may occur during the operation of the tools built according to the present invention. As of the writing of this patent application, all of the timeout intervals are set for three (3) seconds. However, each of the timeouts is designed so as to be independently settable by the system designer, in case it becomes desirable to alter one or more of the individual timeout intervals (i.e., to a time value other than three seconds). Normally this would be done in software code (stored in the memory circuit), used to instruct the processing circuit in its operations, although hardware timers could instead be used.

It will also be understood that the logical operations described in relation to the flow charts of FIGS. **13-15** and FIGS. **35-37** can be implemented using sequential logic, such as by using microprocessor technology, or using a logic state machine, or perhaps by discrete logic; it even could be implemented using parallel processors. One preferred embodiment may use a microprocessor or microcontroller to execute software instructions that are stored in memory cells within an ASIC. In fact, the entire microprocessor or microcontroller, along with RAM and executable ROM, may be contained within a single ASIC, in one mode of the present invention. Of course, other types of circuitry could be used to implement these logical operations depicted in the drawings without departing from the principles of the present invention.

It will be further understood that the precise logical operations depicted in the flow charts of FIGS. **13-15** and FIGS. **35-37**, and discussed above, could be somewhat modified to perform similar, although not exact, functions without departing from the principles of the present invention. The exact nature of some of the decision steps and other commands in these flow charts are directed toward specific future models of fastener driver tools (those involving Senco Products tools, for example) and certainly similar, but somewhat different, steps would be taken for use with other models or brands of fastener driving tools in many instances, with the overall inventive results being the same.

Other aspects of the present invention may have been present in earlier fastener driving tools sold by the Assignee, Senco Products, Inc. (or Senco Brands, Inc.), including information disclosed in previous U.S. patents and published applications. Examples of such publications are patent numbers U.S. Pat. Nos. 6,431,425; 5,927,585; 5,918,788; 5,732,870; 4,986,164; and 4,679,719.

All documents cited in the Background of the Invention and in the Detailed Description of the Invention are, in relevant part, incorporated herein by reference; the citation of any document is not to be construed as an admission that it is prior art with respect to the present invention.

The foregoing description of a preferred embodiment of the invention has been presented for purposes of illustration and description. It is not intended to be exhaustive or to limit the invention to the precise form disclosed. Any examples described or illustrated herein are intended as non-limiting examples, and many modifications or variations of the examples, or of the preferred embodiment(s), are possible in light of the above teachings, without departing from the spirit and scope of the present invention. The embodiment(s) was chosen and described in order to illustrate the principles of the invention and its practical application to thereby enable one of ordinary skill in the art to utilize the invention in various embodiments and with various modifications as are suited to particular uses contemplated. It is intended to cover in the appended claims all such changes and modifications that are within the scope of this invention.

While this invention has been described with respect to embodiments of the invention, the present invention may be further modified within the spirit and scope of this disclosure. This application is therefore intended to cover any variations, uses, or adaptations of the invention using its general principles. Further, this application is intended to cover such departures from the present disclosure as come within known or customary practice in the art to which this invention pertains and which fall within the limits of the appended claims.

What is claimed is:

1. A portable fastener driving tool, comprising:

a housing with a storage chamber that contains a pressurized gas that is always above atmospheric pressure;

a hollow cylinder that includes a movable piston;

a movable driver that is in communication with said piston at least during a drive stroke;

a lifter that is in communication with said driver at least during a return stroke;

a prime mover; and

a source of electrical energy that is removably attached to said housing;

said storage chamber being in fluidic communication with a first end of said hollow cylinder; and

said storage chamber including a removable top cap at a location proximal to said first end of said hollow cylinder;

wherein:

said piston travels through said hollow cylinder between a higher pressure position and a lower pressure position; said piston has a rest position between operational cycles; and a location of said rest position is proximal to said higher pressure position; and

said pressurized gas is not vented to atmosphere after said drive stroke.

2. The tool of claim 1, further comprising:

said movable driver including at least one protrusion; and

said lifter including at least one extension;

wherein:

said at least one extension of the lifter mechanically engages with said at least one protrusion of the driver during said return stroke.

3. The tool of claim 2, further comprising:

a guide body with a linear passageway for said driver;

wherein: said lifter moves in a rotational motion and causes said driver to move in a linear motion along said linear passageway.

4. The tool of claim 2, wherein:

said cylinder and piston act as a gas spring during said drive stroke, and said lifter does not mechanically engage said driver during said drive stroke.

5. The tool of claim 1, wherein the piston is positioned inside the top cover when the piston is at or near the first end of the hollow cylinder.

6. A portable fastener driving tool, comprising:

a housing with a main storage chamber that contains a pressurized gas;

a hollow cylinder that includes a movable piston, wherein:

(a) a first end of the hollow cylinder is always in fluidic communication with said main storage chamber, and

(b) said pressurized gas is not exhausted to atmosphere after a drive stroke;

a driver that is in communication with said piston at least during a drive stroke;

a lifter that is in communication with said driver at least during a return stroke;

a guide body with a linear passageway for said driver;

a handle portion;

a motor that provides motive power for said lifter;

a removable battery pack that provides energy for said motor; and

a removable magazine that holds a plurality of fasteners;

wherein:

said removable battery pack is attached proximal to said handle portion; and

said removable magazine is attached proximal to an exit end of said guide body, wherein said magazine extends past said removable battery pack.

7. The tool of claim 6, further comprising:

said movable driver including at least one protrusion; and

said lifter including at least one extension;

wherein, during said return stroke:

(a) said at least one extension of the lifter mechanically engages with said at least one protrusion of the driver, and (b) said lifter moves in a rotational motion and causes said driver to move in a linear motion along said linear passageway.

8. The tool of claim 7, wherein:

said cylinder and piston act as a gas spring during said drive stroke, and said lifter does not engage said driver during said drive stroke.

9. The tool of claim 6, wherein:

a bottommost surface of said magazine is farther from a centerline of said exit end of the guide body than is a bottommost surface of said battery pack.

10. A portable fastener driving tool, comprising:

(a) a housing with a storage chamber that contains a pressurized gas;

(b) a hollow cylinder that includes a movable piston, wherein said storage chamber is in fluidic communication with said hollow cylinder;

(c) a movable driver that is in communication with said piston at least during a drive stroke;

(d) a lifter that is in communication with said driver at least during a return stroke;

(e) a guide body that is located proximal to said hollow cylinder, and having a linear passageway for said driver, and having an exit end that is located distal from said hollow cylinder;

(f) a removable battery pack that is located at a rear portion of said tool; and

(g) a safety contact element proximal to said exit end, said safety contact element being disposed at a front portion of the tool, above said guide body.

11. The tool of claim 10, further comprising:

an electric motor that derives energy from said battery pack, which provides motive power for said lifter.

12. The tool of claim 11, wherein:

said safety contact element prevents said drive stroke from occurring unless said safety contact element is pressed against a solid surface.

13. The tool of claim 11, further comprising:

(a) said movable driver including at least one protrusion; and

(b) said lifter including at least one extension;

(c) wherein, during said return stroke:

(i) said at least one extension of the lifter mechanically engages with said at least one protrusion of the driver, and

(ii) said lifter moves in a rotational motion and causes said driver to move in a linear motion along said linear passageway.

14. The tool of claim 11, wherein:

said cylinder and piston act as a gas spring during said drive stroke, and said lifter does not engage said driver during said drive stroke.

15. The tool of claim 10, wherein:

said safety contact element is located directly above said guide body, and extends from said front portion of the tool toward a rear portion of the tool, extending along

at least a surface of the guide body that is on the opposite side of the tool from where said battery pack is located.

* * * * *