PTO/AIA/15 (10-17)
Approved for use through 11/30/2020. OMB 0651-0032
U.S. Patent and Trademark Office; U.S. DEPARTMENT OF COMMERCE
Under the Paperwork Reduction Act of 1995 no persons are required to respond to a collection of information unless it displays a valid OMB control number.

UTILITY PATENT APPLICATION TRANSMITTAL

(Only for new nonprovisional applications under 37 CFR 1.53(b))

Attorney Docket No.	SEN0523.US10
First Named Inventor	Richard L. Leimbach
Title	FASTENER DRIVING TOOL USING A GAS SPRING
Priority Mail Express® Label No.	

APPLICATION ELEMENTS

See MPEP chapter 600 concerning utility patent application contents.

1. ☐ **Fee Transmittal Form** (PTO/SB/17 or equivalent)
2. ☐ **Applicant asserts small entity status.** See 37 CFR 1.27
3. ☐ **Applicant certifies micro entity status.** See 37 CFR 1.29. Applicant must attach form PTO/SB/15A or B or equivalent.
4. ☑ **Specification** [*Total Pages* 61] Both the claims and abstract must start on a new page. *(See MPEP § 608.01(a) for information on the preferred arrangement)*
5. ☑ **Drawing(s)** (35 U.S.C. 113) [*Total Sheets* 45]
6. **Inventor's Oath or Declaration** [*Total Pages* 11] *(including substitute statements under 37 CFR 1.64 and assignments serving as an oath or declaration under 37 CFR 1.63(e))*
   a. ☐ Newly executed (original or copy)
   b. ☑ A copy from a prior application (37 CFR 1.63(d))
7. ☑ **Application Data Sheet** ** See note below.* See 37 CFR 1.76 (PTO/AIA/14 or equivalent)
8. **CD-ROM or CD-R** in duplicate, large table, or Computer Program (*Appendix*)
   ☐ Landscape Table on CD
9. **Nucleotide and/or Amino Acid Sequence Submission** (*if applicable, items a. – c. are required*)
   a. ☐ Computer Readable Form (CRF)
   b. ☐ Specification Sequence Listing on:
      i. ☐ CD-ROM or CD-R (2 copies); or
      ii. ☐ Paper
   c. ☐ Statements verifying identity of above copies

ADDRESS TO: **Commissioner for Patents**
P.O. Box 1450
Alexandria, VA 22313-1450

ACCOMPANYING APPLICATION PAPERS

10. ☑ **Assignment Papers** (cover sheet & document(s))
    Name of Assignee Kyocera Senco Industrial Tools, Inc.
11. ☑ **37 CFR 3.73(c) Statement** (*when there is an assignee*) ☑ **Power of Attorney**
12. ☑ **English Translation Document** (*if applicable*)
13. ☑ **Information Disclosure Statement** (PTO/SB/08 or PTO-1449)
    ☑ Copies of citations attached
14. ☐ **Preliminary Amendment**
15. ☐ **Return Receipt Postcard** (*MPEP § 503*) (*Should be specifically itemized*)
16. ☐ **Certified Copy of Priority Document(s)** (*if foreign priority is claimed*)
17. ☐ **Nonpublication Request** Under 35 U.S.C. 122(b)(2)(B)(i). Applicant must attach form PTO/SB/35 or equivalent.
18. ☑ **Other:** Electronic fee payment.

***Note**: (1) Benefit claims under 37 CFR 1.78 and foreign priority claims under 1.55 **must** be included in an Application Data Sheet (ADS).
(2) For applications filed under 35 U.S.C. 111, the application must contain an ADS specifying the applicant if the applicant is an assignee, person to whom the inventor is under an obligation to assign, or person who otherwise shows sufficient proprietary interest in the matter. See 37 CFR 1.46(b).

19. CORRESPONDENCE ADDRESS

☑ The address associated with Customer Number: 40628 **OR** ☐ Correspondence address below

Name					
Address					
City		State		Zip Code	
Country		Telephone		Email	

Signature	/Russell Gribbell/	Date	January 10, 2022
Name (Print/Type)	Russell F. Gribbell	Registration No. (Attorney/Agent)	77,316

This collection of information is required by 37 CFR 1.53(b). The information is required to obtain or retain a benefit by the public which is to file (and by the USPTO to process) an application. Confidentiality is governed by 35 U.S.C. 122 and 37 CFR 1.11 and 1.14. This collection is estimated to take 12 minutes to complete, including gathering, preparing, and submitting the completed application form to the USPTO. Time will vary depending upon the individual case. Any comments on the amount of time you require to complete this form and/or suggestions for reducing this burden, should be sent to the Chief Information Officer, U.S. Patent and Trademark Office, U.S. Department of Commerce, P.O. Box 1450, Alexandria, VA 22313-1450. DO NOT SEND FEES OR COMPLETED FORMS TO THIS ADDRESS. **SEND TO: Commissioner for Patents, P.O. Box 1450, Alexandria, VA 22313-1450.**
If you need assistance in completing the form, call 1-800-PTO-9199 and select option 2.

Privacy Act Statement

The **Privacy Act of 1974 (P.L. 93-579)** requires that you be given certain information in connection with your submission of the attached form related to a patent application or patent. Accordingly, pursuant to the requirements of the Act, please be advised that: (1) the general authority for the collection of this information is 35 U.S.C. 2(b)(2); (2) furnishing of the information solicited is voluntary; and (3) the principal purpose for which the information is used by the U.S. Patent and Trademark Office is to process and/or examine your submission related to a patent application or patent. If you do not furnish the requested information, the U.S. Patent and Trademark Office may not be able to process and/or examine your submission, which may result in termination of proceedings or abandonment of the application or expiration of the patent.

The information provided by you in this form will be subject to the following routine uses:

1. The information on this form will be treated confidentially to the extent allowed under the Freedom of Information Act (5 U.S.C. 552) and the Privacy Act (5 U.S.C 552a). Records from this system of records may be disclosed to the Department of Justice to determine whether disclosure of these records is required by the Freedom of Information Act.
2. A record from this system of records may be disclosed, as a routine use, in the course of presenting evidence to a court, magistrate, or administrative tribunal, including disclosures to opposing counsel in the course of settlement negotiations.
3. A record in this system of records may be disclosed, as a routine use, to a Member of Congress submitting a request involving an individual, to whom the record pertains, when the individual has requested assistance from the Member with respect to the subject matter of the record.
4. A record in this system of records may be disclosed, as a routine use, to a contractor of the Agency having need for the information in order to perform a contract. Recipients of information shall be required to comply with the requirements of the Privacy Act of 1974, as amended, pursuant to 5 U.S.C. 552a(m).
5. A record related to an International Application filed under the Patent Cooperation Treaty in this system of records may be disclosed, as a routine use, to the International Bureau of the World Intellectual Property Organization, pursuant to the Patent Cooperation Treaty.
6. A record in this system of records may be disclosed, as a routine use, to another federal agency for purposes of National Security review (35 U.S.C. 181) and for review pursuant to the Atomic Energy Act (42 U.S.C. 218(c)).
7. A record from this system of records may be disclosed, as a routine use, to the Administrator, General Services, or his/her designee, during an inspection of records conducted by GSA as part of that agency's responsibility to recommend improvements in records management practices and programs, under authority of 44 U.S.C. 2904 and 2906. Such disclosure shall be made in accordance with the GSA regulations governing inspection of records for this purpose, and any other relevant (*i.e.*, GSA or Commerce) directive. Such disclosure shall not be used to make determinations about individuals.
8. A record from this system of records may be disclosed, as a routine use, to the public after either publication of the application pursuant to 35 U.S.C. 122(b) or issuance of a patent pursuant to 35 U.S.C. 151. Further, a record may be disclosed, subject to the limitations of 37 CFR 1.14, as a routine use, to the public if the record was filed in an application which became abandoned or in which the proceedings were terminated and which application is referenced by either a published application, an application open to public inspection or an issued patent.
9. A record from this system of records may be disclosed, as a routine use, to a Federal, State, or local law enforcement agency, if the USPTO becomes aware of a violation or potential violation of law or regulation.

PTO/AIA/01 (06-12)
Approved for use through 01/31/2014. OMB 0651-0032
U.S. Patent and Trademark Office; U.S. DEPARTMENT OF COMMERCE
Under the Paperwork Reduction Act of 1995, no persons are required to respond to a collection of information unless it displays a valid OMB control number.

DECLARATION (37 CFR 1.63) FOR UTILITY OR DESIGN APPLICATION USING AN APPLICATION DATA SHEET (37 CFR 1.76)

Title of Invention	FASTENER DRIVING TOOL USING A GAS SPRING

As the below named inventor, I hereby declare that:

This declaration is directed to:

☐ The attached application, or

☒ United States application or PCT international application number 13/770,481 filed on February 19, 2013.

The above-identified application was made or authorized to be made by me.

I believe that I am the original inventor or an original joint inventor of a claimed invention in the application.

I hereby acknowledge that any willful false statement made in this declaration is punishable under 18 U.S.C. 1001 by fine or imprisonment of not more than five (5) years, or both.

WARNING:

Petitioner/applicant is cautioned to avoid submitting personal information in documents filed in a patent application that may contribute to identity theft. Personal information such as social security numbers, bank account numbers, or credit card numbers (other than a check or credit card authorization form PTO-2038 submitted for payment purposes) is never required by the USPTO to support a petition or an application. If this type of personal information is included in documents submitted to the USPTO, petitioners/applicants should consider redacting such personal information from the documents before submitting them to the USPTO. Petitioner/applicant is advised that the record of a patent application is available to the public after publication of the application (unless a non-publication request in compliance with 37 CFR 1.213(a) is made in the application) or issuance of a patent. Furthermore, the record from an abandoned application may also be available to the public if the application is referenced in a published application or an issued patent (see 37 CFR 1.14). Checks and credit card authorization forms PTO-2038 submitted for payment purposes are not retained in the application file and therefore are not publicly available.

LEGAL NAME OF INVENTOR

Inventor: Danny L. Bolender Date (Optional): 5-6-2013

Signature: Danny L Bolender

Note: An application data sheet (PTO/SB/14 or equivalent), including naming the entire inventive entity, must accompany this form or must have been previously filed. Use an additional PTO/AIA/01 form for each additional inventor.

This collection of information is required by 35 U.S.C. 115 and 37 CFR 1.63. The information is required to obtain or retain a benefit by the public which is to file (and by the USPTO to process) an application. Confidentiality is governed by 35 U.S.C. 122 and 37 CFR 1.11 and 1.14. This collection is estimated to take 1 minute to complete, including gathering, preparing, and submitting the completed application form to the USPTO. Time will vary depending upon the individual case. Any comments on the amount of time you require to complete this form and/or suggestions for reducing this burden, should be sent to the Chief Information Officer, U.S. Patent and Trademark Office, U.S. Department of Commerce, P.O. Box 1450, Alexandria, VA 22313-1450. DO NOT SEND FEES OR COMPLETED FORMS TO THIS ADDRESS. **SEND TO: Commissioner for Patents, P.O. Box 1450, Alexandria, VA 22313-1450.**

If you need assistance in completing the form, call 1-800-PTO-9199 and select option 2.

PTO/AIA/01 (06-12)
Approved for use through 01/31/2014. OMB 0651-0032
U.S. Patent and Trademark Office; U.S. DEPARTMENT OF COMMERCE
Under the Paperwork Reduction Act of 1995, no persons are required to respond to a collection of information unless it displays a valid OMB control number.

DECLARATION (37 CFR 1.63) FOR UTILITY OR DESIGN APPLICATION USING AN APPLICATION DATA SHEET (37 CFR 1.76)

Title of Invention	FASTENER DRIVING TOOL USING A GAS SPRING

As the below named inventor, I hereby declare that:

This declaration is directed to:

☐ The attached application, or

☒ United States application or PCT international application number 13/770,481 filed on February 19, 2013.

The above-identified application was made or authorized to be made by me.

I believe that I am the original inventor or an original joint inventor of a claimed invention in the application.

I hereby acknowledge that any willful false statement made in this declaration is punishable under 18 U.S.C. 1001 by fine or imprisonment of not more than five (5) years, or both.

WARNING:

Petitioner/applicant is cautioned to avoid submitting personal information in documents filed in a patent application that may contribute to identity theft. Personal information such as social security numbers, bank account numbers, or credit card numbers (other than a check or credit card authorization form PTO-2038 submitted for payment purposes) is never required by the USPTO to support a petition or an application. If this type of personal information is included in documents submitted to the USPTO, petitioners/applicants should consider redacting such personal information from the documents before submitting them to the USPTO. Petitioner/applicant is advised that the record of a patent application is available to the public after publication of the application (unless a non-publication request in compliance with 37 CFR 1.213(a) is made in the application) or issuance of a patent. Furthermore, the record from an abandoned application may also be available to the public if the application is referenced in a published application or an issued patent (see 37 CFR 1.14). Checks and credit card authorization forms PTO-2038 submitted for payment purposes are not retained in the application file and therefore are not publicly available.

LEGAL NAME OF INVENTOR

Inventor: Steve Dickinson Date (Optional): 3/23/2013

Signature: Steve Dickinson

Note: An application data sheet (PTO/SB/14 or equivalent), including naming the entire inventive entity, must accompany this form or must have been previously filed. Use an additional PTO/AIA/01 form for each additional inventor.

This collection of information is required by 35 U.S.C. 115 and 37 CFR 1.63. The information is required to obtain or retain a benefit by the public which is to file (and by the USPTO to process) an application. Confidentiality is governed by 35 U.S.C. 122 and 37 CFR 1.11 and 1.14. This collection is estimated to take 1 minute to complete, including gathering, preparing, and submitting the completed application form to the USPTO. Time will vary depending upon the individual case. Any comments on the amount of time you require to complete this form and/or suggestions for reducing this burden, should be sent to the Chief Information Officer, U.S. Patent and Trademark Office, U.S. Department of Commerce, P.O. Box 1450, Alexandria, VA 22313-1450. DO NOT SEND FEES OR COMPLETED FORMS TO THIS ADDRESS. **SEND TO: Commissioner for Patents, P.O. Box 1450, Alexandria, VA 22313-1450.**

If you need assistance in completing the form, call 1-800-PTO-9199 and select option 2.

PTO/AIA/01 (06-12)
Approved for use through 01/31/2014. OMB 0651-0032
U.S. Patent and Trademark Office; U.S. DEPARTMENT OF COMMERCE
Under the Paperwork Reduction Act of 1995, no persons are required to respond to a collection of information unless it displays a valid OMB control number.

DECLARATION (37 CFR 1.63) FOR UTILITY OR DESIGN APPLICATION USING AN APPLICATION DATA SHEET (37 CFR 1.76)

Title of Invention	FASTENER DRIVING TOOL USING A GAS SPRING

As the below named inventor, I hereby declare that:

This declaration is directed to:

☐ The attached application, or

☒ United States application or PCT international application number 13/770,481 filed on February 19, 2013.

The above-identified application was made or authorized to be made by me.

I believe that I am the original inventor or an original joint inventor of a claimed invention in the application.

I hereby acknowledge that any willful false statement made in this declaration is punishable under 18 U.S.C. 1001 by fine or imprisonment of not more than five (5) years, or both.

WARNING:

Petitioner/applicant is cautioned to avoid submitting personal information in documents filed in a patent application that may contribute to identity theft. Personal information such as social security numbers, bank account numbers, or credit card numbers (other than a check or credit card authorization form PTO-2038 submitted for payment purposes) is never required by the USPTO to support a petition or an application. If this type of personal information is included in documents submitted to the USPTO, petitioners/applicants should consider redacting such personal information from the documents before submitting them to the USPTO. Petitioner/applicant is advised that the record of a patent application is available to the public after publication of the application (unless a non-publication request in compliance with 37 CFR 1.213(a) is made in the application) or issuance of a patent. Furthermore, the record from an abandoned application may also be available to the public if the application is referenced in a published application or an issued patent (see 37 CFR 1.14). Checks and credit card authorization forms PTO-2038 submitted for payment purposes are not retained in the application file and therefore are not publicly available.

LEGAL NAME OF INVENTOR

Inventor: Joseph R. Knueven Date (Optional): 5/17/13

Signature: [signature]

Note: An application data sheet (PTO/SB/14 or equivalent), including naming the entire inventive entity, must accompany this form or must have been previously filed. Use an additional PTO/AIA/01 form for each additional inventor.

This collection of information is required by 35 U.S.C. 115 and 37 CFR 1.63. The information is required to obtain or retain a benefit by the public which is to file (and by the USPTO to process) an application. Confidentiality is governed by 35 U.S.C. 122 and 37 CFR 1.11 and 1.14. This collection is estimated to take 1 minute to complete, including gathering, preparing, and submitting the completed application form to the USPTO. Time will vary depending upon the individual case. Any comments on the amount of time you require to complete this form and/or suggestions for reducing this burden, should be sent to the Chief Information Officer, U.S. Patent and Trademark Office, U.S. Department of Commerce, P.O. Box 1450, Alexandria, VA 22313-1450. DO NOT SEND FEES OR COMPLETED FORMS TO THIS ADDRESS. **SEND TO: Commissioner for Patents, P.O. Box 1450, Alexandria, VA 22313-1450.**

If you need assistance in completing the form, call 1-800-PTO-9199 and select option 2.

PTO/AIA/01 (06-12)
Approved for use through 01/31/2014. OMB 0651-0032
U.S. Patent and Trademark Office; U.S. DEPARTMENT OF COMMERCE
Under the Paperwork Reduction Act of 1995, no persons are required to respond to a collection of information unless it displays a valid OMB control number.

DECLARATION (37 CFR 1.63) FOR UTILITY OR DESIGN APPLICATION USING AN APPLICATION DATA SHEET (37 CFR 1.76)

Title of Invention	FASTENER DRIVING TOOL USING A GAS SPRING

As the below named inventor, I hereby declare that:

This declaration is directed to:

☐ The attached application, or

☒ United States application or PCT international application number 13/770,481 filed on February 19, 2013.

The above-identified application was made or authorized to be made by me.

I believe that I am the original inventor or an original joint inventor of a claimed invention in the application.

I hereby acknowledge that any willful false statement made in this declaration is punishable under 18 U.S.C. 1001 by fine or imprisonment of not more than five (5) years, or both.

WARNING:

Petitioner/applicant is cautioned to avoid submitting personal information in documents filed in a patent application that may contribute to identity theft. Personal information such as social security numbers, bank account numbers, or credit card numbers (other than a check or credit card authorization form PTO-2038 submitted for payment purposes) is never required by the USPTO to support a petition or an application. If this type of personal information is included in documents submitted to the USPTO, petitioners/applicants should consider redacting such personal information from the documents before submitting them to the USPTO. Petitioner/applicant is advised that the record of a patent application is available to the public after publication of the application (unless a non-publication request in compliance with 37 CFR 1.213(a) is made in the application) or issuance of a patent. Furthermore, the record from an abandoned application may also be available to the public if the application is referenced in a published application or an issued patent (see 37 CFR 1.14). Checks and credit card authorization forms PTO-2038 submitted for payment purposes are not retained in the application file and therefore are not publicly available.

LEGAL NAME OF INVENTOR

Inventor: Richard L. Leimbach Date (Optional): 3/26/13

Signature: [signature]

Note: An application data sheet (PTO/SB/14 or equivalent), including naming the entire inventive entity, must accompany this form or must have been previously filed. Use an additional PTO/AIA/01 form for each additional inventor.

This collection of information is required by 35 U.S.C. 115 and 37 CFR 1.63. The information is required to obtain or retain a benefit by the public which is to file (and by the USPTO to process) an application. Confidentiality is governed by 35 U.S.C. 122 and 37 CFR 1.11 and 1.14. This collection is estimated to take 1 minute to complete, including gathering, preparing, and submitting the completed application form to the USPTO. Time will vary depending upon the individual case. Any comments on the amount of time you require to complete this form and/or suggestions for reducing this burden, should be sent to the Chief Information Officer, U.S. Patent and Trademark Office, U.S. Department of Commerce, P.O. Box 1450, Alexandria, VA 22313-1450. DO NOT SEND FEES OR COMPLETED FORMS TO THIS ADDRESS. **SEND TO: Commissioner for Patents, P.O. Box 1450, Alexandria, VA 22313-1450.**

If you need assistance in completing the form, call 1-800-PTO-9199 and select option 2.

PTO/AIA/01 (06-12)
Approved for use through 01/31/2014. OMB 0651-0032
U.S. Patent and Trademark Office; U.S. DEPARTMENT OF COMMERCE
Under the Paperwork Reduction Act of 1995, no persons are required to respond to a collection of information unless it displays a valid OMB control number.

DECLARATION (37 CFR 1.63) FOR UTILITY OR DESIGN APPLICATION USING AN APPLICATION DATA SHEET (37 CFR 1.76)

Title of Invention: FASTENER DRIVING TOOL USING A GAS SPRING

As the below named inventor, I hereby declare that:

This declaration is directed to:

☐ The attached application, or

☒ United States application or PCT international application number 13/770,481 filed on February 19, 2013.

The above-identified application was made or authorized to be made by me.

I believe that I am the original inventor or an original joint inventor of a claimed invention in the application.

I hereby acknowledge that any willful false statement made in this declaration is punishable under 18 U.S.C. 1001 by fine or imprisonment of not more than five (5) years, or both.

WARNING:

Petitioner/applicant is cautioned to avoid submitting personal information in documents filed in a patent application that may contribute to identity theft. Personal information such as social security numbers, bank account numbers, or credit card numbers (other than a check or credit card authorization form PTO-2038 submitted for payment purposes) is never required by the USPTO to support a petition or an application. If this type of personal information is included in documents submitted to the USPTO, petitioners/applicants should consider redacting such personal information from the documents before submitting them to the USPTO. Petitioner/applicant is advised that the record of a patent application is available to the public after publication of the application (unless a non-publication request in compliance with 37 CFR 1.213(a) is made in the application) or issuance of a patent. Furthermore, the record from an abandoned application may also be available to the public if the application is referenced in a published application or an issued patent (see 37 CFR 1.14). Checks and credit card authorization forms PTO-2038 submitted for payment purposes are not retained in the application file and therefore are not publicly available.

LEGAL NAME OF INVENTOR

Inventor: Thomas A. McCardle Date (Optional): 5-6-13

Signature: Thomas A. McCardle

Note: An application data sheet (PTO/SB/14 or equivalent), including naming the entire inventive entity, must accompany this form or must have been previously filed. Use an additional PTO/AIA/01 form for each additional inventor.

This collection of information is required by 35 U.S.C. 115 and 37 CFR 1.63. The information is required to obtain or retain a benefit by the public which is to file (and by the USPTO to process) an application. Confidentiality is governed by 35 U.S.C. 122 and 37 CFR 1.11 and 1.14. This collection is estimated to take 1 minute to complete, including gathering, preparing, and submitting the completed application form to the USPTO. Time will vary depending upon the individual case. Any comments on the amount of time you require to complete this form and/or suggestions for reducing this burden, should be sent to the Chief Information Officer, U.S. Patent and Trademark Office, U.S. Department of Commerce, P.O. Box 1450, Alexandria, VA 22313-1450. DO NOT SEND FEES OR COMPLETED FORMS TO THIS ADDRESS. **SEND TO: Commissioner for Patents, P.O. Box 1450, Alexandria, VA 22313-1450.**

If you need assistance in completing the form, call 1-800-PTO-9199 and select option 2.

Doc code: Oath
Document Description: Oath or declaration filed

PTO/AIA/02 (07-13)
Approved for use through 11/30/2020. OMB 0651-0032
U.S. Patent and Trademark Office; U.S. DEPARTMENT OF COMMERCE
Under the Paperwork Reduction Act of 1995, no persons are required to respond to a collection of information unless it displays a valid OMB control number.

SUBSTITUTE STATEMENT IN LIEU OF AN OATH OR DECLARATION FOR UTILITY OR DESIGN PATENT APPLICATION (35 U.S.C. 115(d) AND 37 CFR 1.64)

Title of Invention: FASTENER DRIVING TOOL USING A GAS SPRING

This statement is directed to:

☐ The attached application,

OR

☒ United States application or PCT international application number 17/090,018 filed on November 5, 2020.

LEGAL NAME of inventor to whom this substitute statement applies:

(*E.g.*, Given Name (first and middle (if any)) and Family Name or Surname)

Robert L. Lance, Jr.

Residence (except for a deceased or legally incapacitated inventor):

City	State	Country
Midland	OH	US

Mailing Address (except for a deceased or legally incapacitated inventor):

14461 U.S. 68

City	State	Zip	Country
Midland	OH	45148	US

I believe the above-named inventor or joint inventor to be the original inventor or an original joint inventor of a claimed invention in the application.

The above-identified application was made or authorized to be made by me.

I hereby acknowledge that any willful false statement made in this statement is punishable under 18 U.S.C. 1001 by fine or imprisonment of not more than five (5) years, or both.

Relationship to the inventor to whom this substitute statement applies:

- ☐ Legal Representative (for deceased or legally incapacitated inventor only),
- ☒ Assignee,
- ☐ Person to whom the inventor is under an obligation to assign,
- ☐ Person who otherwise shows a sufficient proprietary interest in the matter (petition under 37 CFR 1.46 is required), or
- ☐ Joint Inventor.

This collection of information is required by 35 U.S.C. 115 and 37 CFR 1.63. The information is required to obtain or retain a benefit by the public which is to file (and by the USPTO to process) an application. Confidentiality is governed by 35 U.S.C. 122 and 37 CFR 1.11 and 1.14. This collection is estimated to take 1 minute to complete, including gathering, preparing, and submitting the completed application form to the USPTO. Time will vary depending upon the individual case. Any comments on the amount of time you require to complete this form and/or suggestions for reducing this burden, should be sent to the Chief Information Officer, U.S. Patent and Trademark Office, U.S. Department of Commerce, P.O. Box 1450, Alexandria, VA 22313-1450. DO NOT SEND FEES OR COMPLETED FORMS TO THIS ADDRESS. **SEND TO: Commissioner for Patents, P.O. Box 1450, Alexandria, VA 22313-1450.**

If you need assistance in completing the form, call 1-800-PTO-9199 and select option 2.

Approved for use through 11/30/2020. OMB 0651-0032
U.S. Patent and Trademark Office; U.S. DEPARTMENT OF COMMERCE
Under the Paperwork Reduction Act of 1995, no persons are required to respond to a collection of information unless it displays a valid OMB control number.

SUBSTITUTE STATEMENT

Circumstances permitting execution of this substitute statement:

- [ ] Inventor is deceased,
- [ ] Inventor is under legal incapacity,
- [x] Inventor cannot be found or reached after diligent effort, or
- [ ] Inventor has refused to execute the oath or declaration under 37 CFR 1.63.

If there are joint inventors, please check the appropriate box below:

- [x] An application data sheet under 37 CFR 1.76 (PTO/AIA/14 or equivalent) naming the entire inventive entity has been or is currently submitted.

OR

- [ ] An application data sheet under 37 CFR 1.76 (PTO/AIA/14 or equivalent) has not been submitted. Thus, a Substitute Statement Supplemental Sheet (PTO/AIA/11 or equivalent) naming the entire inventive entity and providing inventor information is attached. See 37 CFR 1.64(b).

WARNING:

Petitioner/applicant is cautioned to avoid submitting personal information in documents filed in a patent application that may contribute to identity theft. Personal information such as social security numbers, bank account numbers, or credit card numbers (other than a check or credit card authorization form PTO-2038 submitted for payment purposes) is never required by the USPTO to support a petition or an application. If this type of personal information is included in documents submitted to the USPTO, petitioners/applicants should consider redacting such personal information from the documents before submitting them to the USPTO. Petitioner/applicant is advised that the record of a patent application is available to the public after publication of the application (unless a non-publication request in compliance with 37 CFR 1.213(a) is made in the application) or issuance of a patent. Furthermore, the record from an abandoned application may also be available to the public if the application is referenced in a published application or an issued patent (see 37 CFR 1.14). Checks and credit card authorization forms PTO-2038 submitted for payment purposes are not retained in the application file and therefore are not publicly available.

PERSON EXECUTING THIS SUBSTITUTE STATEMENT:

Name: Clifford C. Mentrup | Date (Optional):

Signature:

APPLICANT NAME AND TITLE OF PERSON EXECUTING THIS SUBSTITUTE STATEMENT:

If the applicant is a juristic entity, list the applicant name and the title of the signer:

Applicant Name: Kyocera Senco Industrial Tools, Inc.

Title of Person Executing This Substitute Statement: President

The signer, whose title is supplied above, is authorized to act on behalf of the applicant.

Residence of the signer (unless provided in an application data sheet, PTO/AIA/14 or equivalent):

City Cincinnati | State OH | Country US

Mailing Address of the signer (unless provided in an application data sheet, PTO/AIA/14 or equivalent)

Kyocera Senco Industrial Tools, Inc.
4270 Ivy Pointe Boulevard

City Cincinnati | State OH | Zip 45245 | Country US

Note: Use an additional PTO/AIA/02 form for each inventor who is deceased, legally incapacitated, cannot be found or reached after diligent effort, or has refused to execute the oath or declaration under 37 CFR 1.63.

Doc code: Oath
Document Description: Oath or declaration filed

PTO/AIA/02 (07-13)
Approved for use through 11/30/2020. OMB 0651-0032
U.S. Patent and Trademark Office; U.S. DEPARTMENT OF COMMERCE
Under the Paperwork Reduction Act of 1995, no persons are required to respond to a collection of information unless it displays a valid OMB control number.

SUBSTITUTE STATEMENT IN LIEU OF AN OATH OR DECLARATION FOR UTILITY OR DESIGN PATENT APPLICATION (35 U.S.C. 115(d) AND 37 CFR 1.64)

Title of Invention	FASTENER DRIVING TOOL USING A GAS SPRING

This statement is directed to:

☐ The attached application,

OR

☒ United States application or PCT international application number 17/090,018 filed on November 5, 2020.

LEGAL NAME of inventor to whom this substitute statement applies:

(*E.g.*, Given Name (first and middle (if any)) and Family Name or Surname)

Michael V. Petrocelli

Residence (except for a deceased or legally incapacitated inventor):

City	State	Country

Mailing Address (except for a deceased or legally incapacitated inventor):

(Mr. Petrocelli is deceased)

City	State	Zip	Country

I believe the above-named inventor or joint inventor to be the original inventor or an original joint inventor of a claimed invention in the application.

The above-identified application was made or authorized to be made by me.

I hereby acknowledge that any willful false statement made in this statement is punishable under 18 U.S.C. 1001 by fine or imprisonment of not more than five (5) years, or both.

Relationship to the inventor to whom this substitute statement applies:

- ☐ Legal Representative (for deceased or legally incapacitated inventor only),
- ☒ Assignee,
- ☐ Person to whom the inventor is under an obligation to assign,
- ☐ Person who otherwise shows a sufficient proprietary interest in the matter (petition under 37 CFR 1.46 is required), or
- ☐ Joint Inventor.

This collection of information is required by 35 U.S.C. 115 and 37 CFR 1.63. The information is required to obtain or retain a benefit by the public which is to file (and by the USPTO to process) an application. Confidentiality is governed by 35 U.S.C. 122 and 37 CFR 1.11 and 1.14. This collection is estimated to take 1 minute to complete, including gathering, preparing, and submitting the completed application form to the USPTO. Time will vary depending upon the individual case. Any comments on the amount of time you require to complete this form and/or suggestions for reducing this burden, should be sent to the Chief Information Officer, U.S. Patent and Trademark Office, U.S. Department of Commerce, P.O. Box 1450, Alexandria, VA 22313-1450. DO NOT SEND FEES OR COMPLETED FORMS TO THIS ADDRESS. **SEND TO: Commissioner for Patents, P.O. Box 1450, Alexandria, VA 22313-1450.**

If you need assistance in completing the form, call 1-800-PTO-9199 and select option 2.

Under the Paperwork Reduction Act of 1995, no persons are required to respond to a collection of information unless it displays a valid OMB control number.

SUBSTITUTE STATEMENT

Circumstances permitting execution of this substitute statement:

- [x] Inventor is deceased,
- [ ] Inventor is under legal incapacity,
- [ ] Inventor cannot be found or reached after diligent effort, or
- [ ] Inventor has refused to execute the oath or declaration under 37 CFR 1.63.

If there are joint inventors, please check the appropriate box below:

- [x] An application data sheet under 37 CFR 1.76 (PTO/AIA/14 or equivalent) naming the entire inventive entity has been or is currently submitted.

OR

- [ ] An application data sheet under 37 CFR 1.76 (PTO/AIA/14 or equivalent) has not been submitted. Thus, a Substitute Statement Supplemental Sheet (PTO/AIA/11 or equivalent) naming the entire inventive entity and providing inventor information is attached. See 37 CFR 1.64(b).

WARNING:

Petitioner/applicant is cautioned to avoid submitting personal information in documents filed in a patent application that may contribute to identity theft. Personal information such as social security numbers, bank account numbers, or credit card numbers (other than a check or credit card authorization form PTO-2038 submitted for payment purposes) is never required by the USPTO to support a petition or an application. If this type of personal information is included in documents submitted to the USPTO, petitioners/applicants should consider redacting such personal information from the documents before submitting them to the USPTO. Petitioner/applicant is advised that the record of a patent application is available to the public after publication of the application (unless a non-publication request in compliance with 37 CFR 1.213(a) is made in the application) or issuance of a patent. Furthermore, the record from an abandoned application may also be available to the public if the application is referenced in a published application or an issued patent (see 37 CFR 1.14). Checks and credit card authorization forms PTO-2038 submitted for payment purposes are not retained in the application file and therefore are not publicly available.

PERSON EXECUTING THIS SUBSTITUTE STATEMENT:

Name: Clifford C. Mentrup | Date (Optional):

Signature: Clifford Mentrup

APPLICANT NAME AND TITLE OF PERSON EXECUTING THIS SUBSTITUTE STATEMENT:

If the applicant is a juristic entity, list the applicant name and the title of the signer:

Applicant Name: Kyocera Senco Industrial Tools, Inc.

Title of Person Executing This Substitute Statement: President

The signer, whose title is supplied above, is authorized to act on behalf of the applicant.

Residence of the signer (unless provided in an application data sheet, PTO/AIA/14 or equivalent):

City Cincinnati | State OH | Country US

Mailing Address of the signer (unless provided in an application data sheet, PTO/AIA/14 or equivalent)

Kyocera Senco Industrial Tools, Inc.
4270 Ivy Pointe Boulevard

City Cincinnati | State OH | Zip 45245 | Country US

Note: Use an additional PTO/AIA/02 form for each inventor who is deceased, legally incapacitated, cannot be found or reached after diligent effort, or has refused to execute the oath or declaration under 37 CFR 1.63.

Doc code: Oath
Document Description: Oath or declaration filed

PTO/AIA/02 (07-13)
Approved for use through 11/30/2020. OMB 0651-0032
U.S. Patent and Trademark Office; U.S. DEPARTMENT OF COMMERCE
Under the Paperwork Reduction Act of 1995, no persons are required to respond to a collection of information unless it displays a valid OMB control number.

SUBSTITUTE STATEMENT IN LIEU OF AN OATH OR DECLARATION FOR UTILITY OR DESIGN PATENT APPLICATION (35 U.S.C. 115(d) AND 37 CFR 1.64)

Title of Invention FASTENER DRIVING TOOL USING A GAS SPRING

This statement is directed to:

☐ The attached application,

OR

☒ United States application or PCT international application number 17/090,018 filed on November 5, 2020.

LEGAL NAME of inventor to whom this substitute statement applies:

(*E.g.*, Given Name (first and middle (if any)) and Family Name or Surname)

Dan Stoltz

Residence (except for a deceased or legally incapacitated inventor):

City	State	Country
Sardinia	OH	US

Mailing Address (except for a deceased or legally incapacitated inventor):

12978 Prudy Road

City	State	Zip	Country
Sardinia	OH	45171	US

I believe the above-named inventor or joint inventor to be the original inventor or an original joint inventor of a claimed invention in the application.

The above-identified application was made or authorized to be made by me.

I hereby acknowledge that any willful false statement made in this statement is punishable under 18 U.S.C. 1001 by fine or imprisonment of not more than five (5) years, or both.

Relationship to the inventor to whom this substitute statement applies:

- ☐ Legal Representative (for deceased or legally incapacitated inventor only),
- ☒ Assignee,
- ☐ Person to whom the inventor is under an obligation to assign,
- ☐ Person who otherwise shows a sufficient proprietary interest in the matter (petition under 37 CFR 1.46 is required), or
- ☐ Joint Inventor.

This collection of information is required by 35 U.S.C. 115 and 37 CFR 1.63. The information is required to obtain or retain a benefit by the public which is to file (and by the USPTO to process) an application. Confidentiality is governed by 35 U.S.C. 122 and 37 CFR 1.11 and 1.14. This collection is estimated to take 1 minute to complete, including gathering, preparing, and submitting the completed application form to the USPTO. Time will vary depending upon the individual case. Any comments on the amount of time you require to complete this form and/or suggestions for reducing this burden, should be sent to the Chief Information Officer, U.S. Patent and Trademark Office, U.S. Department of Commerce, P.O. Box 1450, Alexandria, VA 22313-1450. DO NOT SEND FEES OR COMPLETED FORMS TO THIS ADDRESS. **SEND TO: Commissioner for Patents, P.O. Box 1450, Alexandria, VA 22313-1450.**

If you need assistance in completing the form, call 1-800-PTO-9199 and select option 2.

Under the Paperwork Reduction Act of 1995, no persons are required to respond to a collection of information unless it displays a valid OMB control number.

SUBSTITUTE STATEMENT

Circumstances permitting execution of this substitute statement:

- ☐ Inventor is deceased,
- ☐ Inventor is under legal incapacity,
- ☒ Inventor cannot be found or reached after diligent effort, or
- ☐ Inventor has refused to execute the oath or declaration under 37 CFR 1.63.

If there are joint inventors, please check the appropriate box below:

- ☒ An application data sheet under 37 CFR 1.76 (PTO/AIA/14 or equivalent) naming the entire inventive entity has been or is currently submitted.

OR

- ☐ An application data sheet under 37 CFR 1.76 (PTO/AIA/14 or equivalent) has not been submitted. Thus, a Substitute Statement Supplemental Sheet (PTO/AIA/11 or equivalent) naming the entire inventive entity and providing inventor information is attached. See 37 CFR 1.64(b).

WARNING:

Petitioner/applicant is cautioned to avoid submitting personal information in documents filed in a patent application that may contribute to identity theft. Personal information such as social security numbers, bank account numbers, or credit card numbers (other than a check or credit card authorization form PTO-2038 submitted for payment purposes) is never required by the USPTO to support a petition or an application. If this type of personal information is included in documents submitted to the USPTO, petitioners/applicants should consider redacting such personal information from the documents before submitting them to the USPTO. Petitioner/applicant is advised that the record of a patent application is available to the public after publication of the application (unless a non-publication request in compliance with 37 CFR 1.213(a) is made in the application) or issuance of a patent. Furthermore, the record from an abandoned application may also be available to the public if the application is referenced in a published application or an issued patent (see 37 CFR 1.14). Checks and credit card authorization forms PTO-2038 submitted for payment purposes are not retained in the application file and therefore are not publicly available.

PERSON EXECUTING THIS SUBSTITUTE STATEMENT:

Name: Clifford C. Mentrup	Date (Optional):
Signature:	

APPLICANT NAME AND TITLE OF PERSON EXECUTING THIS SUBSTITUTE STATEMENT:

If the applicant is a juristic entity, list the applicant name and the title of the signer:

Applicant Name: Kyocera Senco Industrial Tools, Inc.

Title of Person Executing This Substitute Statement: President

The signer, whose title is supplied above, is authorized to act on behalf of the applicant.

Residence of the signer (unless provided in an application data sheet, PTO/AIA/14 or equivalent):

City	State	Country
Cincinnati	OH	US

Mailing Address of the signer (unless provided in an application data sheet, PTO/AIA/14 or equivalent)

Kyocera Senco Industrial Tools, Inc.
4270 Ivy Pointe Boulevard

City	State	Zip	Country
Cincinnati	OH	45245	US

Note: Use an additional PTO/AIA/02 form for each inventor who is deceased, legally incapacitated, cannot be found or reached after diligent effort, or has refused to execute the oath or declaration under 37 CFR 1.63.

PTO/SB/08a (02-18)
Approved for use through 11/30/2020. OMB 0651-0031
U.S. Patent and Trademark Office; U.S. DEPARTMENT OF COMMERCE
Under the Paperwork Reduction Act of 1995, no persons are required to respond to a collection of information unless it contains a valid OMB control number.

INFORMATION DISCLOSURE STATEMENT BY APPLICANT

(Not for submission under 37 CFR 1.99)

Application Number	
Filing Date	
First Named Inventor	Richard L. Leimbach, et al.
Art Unit	
Examiner Name	
Attorney Docket Number	SEN0523.US10

U.S.PATENTS Remove

Examiner Initial*	Cite No	Patent Number	Kind Code[1]	Issue Date	Name of Patentee or Applicant of cited Document	Pages,Columns,Lines where Relevant Passages or Relevant Figures Appear
	1	6938811		2005-09-06	Ehmig et al.	
	2	4215808		1980-08-05	Sollberger et al.	FIGS. 1,3,4,5; Col.4, ln.26-29; Col.6, ln.8-28; Col.6, ln.43-53; Col.7, ln.3-12; Col.8, ln.60-Col.9, ln.5.
	3	5720423		1998-02-24	Kondo et al.	
	4	2933290		1960-04-19	Ryder	
	5	3878902		1975-04-22	Matsuo	
	6	2575455		1951-11-20	Lang	
	7	4530455		1985-07-23	Vornberger	
	8	7225961		2007-06-05	Lee	

INFORMATION DISCLOSURE STATEMENT BY APPLICANT (Not for submission under 37 CFR 1.99)		
	Application Number	
	Filing Date	
	First Named Inventor	Richard L. Leimbach, et al.
	Art Unit	
	Examiner Name	
	Attorney Docket Number	SEN0523.US10

	9	7225962		2007-06-05	Porth et al.	
	10	6997367		2006-02-14	Hu	
	11	4203353		1980-05-20	Bernham et al.	
	12	5503319		1996-04-02	Lai	
	13	6533156		2003-03-18	Chang	
	14	7040521		2006-05-09	Kolodziej et al.	
	15	3924692		1975-12-09	Saari	
	16	3150488		1964-09-29	Haley	
	17	1774967		1930-09-02	Ellis	
	18	3847322		1974-11-12	Smith	
	19	3913685		1975-10-21	Enstrom	

INFORMATION DISCLOSURE STATEMENT BY APPLICANT (Not for submission under 37 CFR 1.99)		
	Application Number	
	Filing Date	
	First Named Inventor	Richard L. Leimbach, et al.
	Art Unit	
	Examiner Name	
	Attorney Docket Number	SEN0523.US10

	20	2814041		1957-11-26	Haley	
	21	4741518		1988-05-03	Wallis	
	22	3589588		1971-06-29	Vasku	
	23	5199627		1993-04-06	Christensen	
	24	5605268		1997-02-25	Hayashi	
	25	7494036		2009-02-24	Shima	

If you wish to add additional U.S. Patent citation information please click the Add button. Add

U.S.PATENT APPLICATION PUBLICATIONS Remove

Examiner Initial*	Cite No	Publication Number	Kind Code[1]	Publication Date	Name of Patentee or Applicant of cited Document	Pages,Columns,Lines where Relevant Passages or Relevant Figures Appear
	1	20070045377		2007-03-01	Towfighi	
	2	20030218042		2003-11-27	Odoni et al.	
	3	20060180631		2006-08-17	Pedicini	FIGS. 1-4; Pg.2 [0020]; Pg.4 [0077]; Pg.5 [0080], [0081], [0082].

INFORMATION DISCLOSURE STATEMENT BY APPLICANT (Not for submission under 37 CFR 1.99)		
	Application Number	
	Filing Date	
	First Named Inventor	Richard L. Leimbach, et al.
	Art Unit	
	Examiner Name	
	Attorney Docket Number	SEN0523.US10

	4	20050082334		2005-04-21	Hu	
	5	20080190988		2008-08-14	Pedicini	
	6	20050217875		2005-10-06	Forster	
	7	20080067213		2008-03-20	Shima	
	8	20070007319		2007-01-11	Simonelli	
	9	20080041914		2008-02-21	Simonelli	

If you wish to add additional U.S. Published Application citation information please click the Add button. Add

FOREIGN PATENT DOCUMENTS Remove

Examiner Initial*	Cite No	Foreign Document Number[3]	Country Code[2] i	Kind Code[4]	Publication Date	Name of Patentee or Applicant of cited Document	Pages,Columns,Lines where Relevant Passages or Relevant Figures Appear	T[5]
	1	1503164	DE		1970-03-19	Haley	See US 3,150,488 (above)	X
	2	1559571	GB		1980-01-23	Blurnham et al.		☐
	3	3711784	DE		1987-08-26	Hauck		☒

If you wish to add additional Foreign Patent Document citation information please click the Add button Add

INFORMATION DISCLOSURE STATEMENT BY APPLICANT (Not for submission under 37 CFR 1.99)		
	Application Number	
	Filing Date	
	First Named Inventor	Richard L. Leimbach, et al.
	Art Unit	
	Examiner Name	
	Attorney Docket Number	SEN0523.US10

NON-PATENT LITERATURE DOCUMENTS Remove

Examiner Initials*	Cite No	Include name of the author (in CAPITAL LETTERS), title of the article (when appropriate), title of the item (book, magazine, journal, serial, symposium, catalog, etc), date, pages(s), volume-issue number(s), publisher, city and/or country where published.	T[5]
	1	International Search Report, PCT/US2008/078408, 10 pages (December 8, 2008)	
	2	Two-page "TOOL ASSEMBLY" drawing of Senco Model No. SN952XP pneumatic tool; dated March 4, 2008; representative of earlier tools in public use before 2006; ADMITTED PRIOR ART.	
	3	One-page magnified view of "TOOL ASSEMBLY" drawing of Senco Model No. SN952XP pneumatic tool; March 4, 2008; representative of earlier tools in public use before 2006; ADMITTED PRIOR ART.	
	4	European Search Report for EP 08 83 4872, November 19, 2015.	
	5	Sixteen page Operating Instructions for Senco AirFree 41 Cordless Finish Nailer; September 7, 2001. NOTE: this is an old "flywheel" tool--see Patent No. US 6669072.	
	6	Four page Parts Reference Guide for Senco AirFree 41 Cordless Finish Nailer; 2004. NOTE: this is an old "flywheel" tool--see Patent No. US 6669072.	
	7	Four page Parts Reference Guide for Senco Cordless Finish 41 15 ga. Finish Nailer; 2008. NOTE: this is an old "flywheel" tool--see Patent No. US 6669072.	

If you wish to add additional non-patent literature document citation information please click the Add button Add

EXAMINER SIGNATURE

Examiner Signature		Date Considered	

*EXAMINER: Initial if reference considered, whether or not citation is in conformance with MPEP 609. Draw line through a citation if not in conformance and not considered. Include copy of this form with next communication to applicant.

INFORMATION DISCLOSURE STATEMENT BY APPLICANT (Not for submission under 37 CFR 1.99)	Application Number	
	Filing Date	
	First Named Inventor	Richard L. Leimbach, et al.
	Art Unit	
	Examiner Name	
	Attorney Docket Number	SEN0523.US10

[1] See Kind Codes of USPTO Patent Documents at www.USPTO.GOV or MPEP 901.04. [2] Enter office that issued the document, by the two-letter code (WIPO Standard ST.3). [3] For Japanese patent documents, the indication of the year of the reign of the Emperor must precede the serial number of the patent document. [4] Kind of document by the appropriate symbols as indicated on the document under WIPO Standard ST.16 if possible. [5] Applicant is to place a check mark here if English language translation is attached.

INFORMATION DISCLOSURE STATEMENT BY APPLICANT (Not for submission under 37 CFR 1.99)	Application Number	
	Filing Date	
	First Named Inventor	Richard L. Leimbach, et al.
	Art Unit	
	Examiner Name	
	Attorney Docket Number	SEN0523.US10

CERTIFICATION STATEMENT

Please see 37 CFR 1.97 and 1.98 to make the appropriate selection(s):

That each item of information contained in the information disclosure statement was first cited in any communication from a foreign patent office in a counterpart foreign application not more than three months prior to the filing of the information disclosure statement. See 37 CFR 1.97(e)(1).

OR

☐ That no item of information contained in the information disclosure statement was cited in a communication from a foreign patent office in a counterpart foreign application, and, to the knowledge of the person signing the certification after making reasonable inquiry, no item of information contained in the information disclosure statement was known to any individual designated in 37 CFR 1.56(c) more than three months prior to the filing of the information disclosure statement. See 37 CFR 1.97(e)(2).

See attached certification statement.

The fee set forth in 37 CFR 1.17 (p) has been submitted herewith.

☒ A certification statement is not submitted herewith.

SIGNATURE

A signature of the applicant or representative is required in accordance with CFR 1.33, 10.18. Please see CFR 1.4(d) for the form of the signature.

Signature	/Russell Gribbell/	Date (YYYY-MM-DD)	2022-01-10
Name/Print	Russell F. Gribbell	Registration Number	77316

This collection of information is required by 37 CFR 1.97 and 1.98. The information is required to obtain or retain a benefit by the public which is to file (and by the USPTO to process) an application. Confidentiality is governed by 35 U.S.C. 122 and 37 CFR 1.14. This collection is estimated to take 1 hour to complete, including gathering, preparing and submitting the completed application form to the USPTO. Time will vary depending upon the individual case. Any comments on the amount of time you require to complete this form and/or suggestions for reducing this burden, should be sent to the Chief Information Officer, U.S. Patent and Trademark Office, U.S. Department of Commerce, P.O. Box 1450, Alexandria, VA 22313-1450. DO NOT SEND FEES OR COMPLETED FORMS TO THIS ADDRESS. **SEND TO: Commissioner for Patents, P.O. Box 1450, Alexandria, VA 22313-1450.**

Privacy Act Statement

The Privacy Act of 1974 (P.L. 93-579) requires that you be given certain information in connection with your submission of the attached form related to a patent application or patent. Accordingly, pursuant to the requirements of the Act, please be advised that: (1) the general authority for the collection of this information is 35 U.S.C. 2(b)(2); (2) furnishing of the information solicited is voluntary; and (3) the principal purpose for which the information is used by the U.S. Patent and Trademark Office is to process and/or examine your submission related to a patent application or patent. If you do not furnish the requested information, the U.S. Patent and Trademark Office may not be able to process and/or examine your submission, which may result in termination of proceedings or abandonment of the application or expiration of the patent.

The information provided by you in this form will be subject to the following routine uses:

1. The information on this form will be treated confidentially to the extent allowed under the Freedom of Information Act (5 U.S.C. 552) and the Privacy Act (5 U.S.C. 552a). Records from this system of records may be disclosed to the Department of Justice to determine whether the Freedom of Information Act requires disclosure of these record s.

2. A record from this system of records may be disclosed, as a routine use, in the course of presenting evidence to a court, magistrate, or administrative tribunal, including disclosures to opposing counsel in the course of settlement negotiations.

3. A record in this system of records may be disclosed, as a routine use, to a Member of Congress submitting a request involving an individual, to whom the record pertains, when the individual has requested assistance from the Member with respect to the subject matter of the record.

4. A record in this system of records may be disclosed, as a routine use, to a contractor of the Agency having need for the information in order to perform a contract. Recipients of information shall be required to comply with the requirements of the Privacy Act of 1974, as amended, pursuant to 5 U.S.C. 552a(m).

5. A record related to an International Application filed under the Patent Cooperation Treaty in this system of records may be disclosed, as a routine use, to the International Bureau of the World Intellectual Property Organization, pursuant to the Patent Cooperation Treaty.

6. A record in this system of records may be disclosed, as a routine use, to another federal agency for purposes of National Security review (35 U.S.C. 181) and for review pursuant to the Atomic Energy Act (42 U.S.C. 218(c)).

7. A record from this system of records may be disclosed, as a routine use, to the Administrator, General Services, or his/her designee, during an inspection of records conducted by GSA as part of that agency's responsibility to recommend improvements in records management practices and programs, under authority of 44 U.S.C. 2904 and 2906. Such disclosure shall be made in accordance with the GSA regulations governing inspection of records for this purpose, and any other relevant (i.e., GSA or Commerce) directive. Such disclosure shall not be used to make determinations about individuals.

8. A record from this system of records may be disclosed, as a routine use, to the public after either publication of the application pursuant to 35 U.S.C. 122(b) or issuance of a patent pursuant to 35 U.S.C. 151. Further, a record may be disclosed, subject to the limitations of 37 CFR 1.14, as a routine use, to the public if the record was filed in an application which became abandoned or in which the proceedings were terminated and which application is referenced by either a published application, an application open to public inspections or an issued patent.

9. A record from this system of records may be disclosed, as a routine use, to a Federal, State, or local law enforcement agency, if the USPTO becomes aware of a violation or potential violation of law or regulation.

PTO/SB/08a (07-09)
Approved for use through 11/30/2020. OMB 0651-0031
U.S. Patent and Trademark Office; U.S. DEPARTMENT OF COMMERCE
Under the Paperwork Reduction Act of 1995, no persons are required to respond to a collection of information unless it contains a valid OMB control number.

Substitute for form 1449/PTO

INFORMATION DISCLOSURE STATEMENT BY APPLICANT

(Use as many sheets as necessary)

Sheet 1 of 1

Complete if Known	
Application Number	
Filing Date	
First Named Inventor	Richard L. Leimbach
Art Unit	
Examiner Name	
Attorney Docket Number	SEN0523.US10

U. S. PATENT DOCUMENTS

Examiner Initials*	Cite No.[1]	Document Number Number-Kind Code[2] (if known)	Publication Date MM-DD-YYYY	Name of Patentee or Applicant of Cited Document	Pages, Columns, Lines, Where Relevant Passages or Relevant Figures Appear
		US- 860536	07-16-1907	Ellingham	
		US- 6669072	12-30-2003	Burke	FIGS. 6-7
		US-			
		US-			
		US-			
		US-			
		US-			
		US-			
		US-			
		US-			
		US-			
		US-			
		US-			
		US-			
		US-			
		US-			
		US-			
		US-			
		US-			

FOREIGN PATENT DOCUMENTS

Examiner Initials*	Cite No.[1]	Foreign Patent Document Country Code[3]-Number[4]-Kind Code[5] (if known)	Publication Date MM-DD-YYYY	Name of Patentee or Applicant of Cited Document	Pages, Columns, Lines, Where Relevant Passages Or Relevant Figures Appear	T[6]

Examiner Signature		Date Considered	

*EXAMINER: Initial if reference considered, whether or not citation is in conformance with MPEP 609. Draw line through citation if not in conformance and not considered. Include copy of this form with next communication to applicant. [1]Applicant's unique citation designation number (optional). [2]See Kinds Codes of USPTO Patent Documents at www.uspto.gov or MPEP 901.04. [3] Enter Office that issued the document, by the two-letter code (WIPO Standard ST.3). [4] For Japanese patent documents, the indication of the year of the reign of the Emperor must precede the serial number of the patent document. [5]Kind of document by the appropriate symbols as indicated on the document under WIPO Standard ST.16 if possible. [6]Applicant is to place a check mark here if English language Translation is attached.

This collection of information is required by 37 CFR 1.97 and 1.98. The information is required to obtain or retain a benefit by the public which is to file (and by the USPTO to process) an application. Confidentiality is governed by 35 U.S.C. 122 and 37 CFR 1.14. This collection is estimated to take 2 hours to complete, including gathering, preparing, and submitting the completed application form to the USPTO. Time will vary depending upon the individual case. Any comments on the amount of time you require to complete this form and/or suggestions for reducing this burden, should be sent to the Chief Information Officer, U.S. Patent and Trademark Office, P.O. Box 1450, Alexandria, VA 22313-1450. DO NOT SEND FEES OR COMPLETED FORMS TO THIS ADDRESS. **SEND TO: Commissioner for Patents, P.O. Box 1450, Alexandria, VA 22313-1450.**

If you need assistance in completing the form, call 1-800-PTO-9199 (1-800-786-9199) and select option 2.

Privacy Act Statement

The Privacy Act of 1974 (P.L. 93-579) requires that you be given certain information in connection with your submission of the attached form related to a patent application or patent. Accordingly, pursuant to the requirements of the Act, please be advised that: (1) the general authority for the collection of this information is 35 U.S.C. 2(b)(2); (2) furnishing of the information solicited is voluntary; and (3) the principal purpose for which the information is used by the U.S. Patent and Trademark Office is to process and/or examine your submission related to a patent application or patent. If you do not furnish the requested information, the U.S. Patent and Trademark Office may not be able to process and/or examine your submission, which may result in termination of proceedings or abandonment of the application or expiration of the patent.

The information provided by you in this form will be subject to the following routine uses:

1. The information on this form will be treated confidentially to the extent allowed under the Freedom of Information Act (5 U.S.C. 552) and the Privacy Act (5 U.S.C 552a). Records from this system of records may be disclosed to the Department of Justice to determine whether disclosure of these records is required by the Freedom of Information Act.
2. A record from this system of records may be disclosed, as a routine use, in the course of presenting evidence to a court, magistrate, or administrative tribunal, including disclosures to opposing counsel in the course of settlement negotiations.
3. A record in this system of records may be disclosed, as a routine use, to a Member of Congress submitting a request involving an individual, to whom the record pertains, when the individual has requested assistance from the Member with respect to the subject matter of the record.
4. A record in this system of records may be disclosed, as a routine use, to a contractor of the Agency having need for the information in order to perform a contract. Recipients of information shall be required to comply with the requirements of the Privacy Act of 1974, as amended, pursuant to 5 U.S.C. 552a(m).
5. A record related to an International Application filed under the Patent Cooperation Treaty in this system of records may be disclosed, as a routine use, to the International Bureau of the World Intellectual Property Organization, pursuant to the Patent Cooperation Treaty.
6. A record in this system of records may be disclosed, as a routine use, to another federal agency for purposes of National Security review (35 U.S.C. 181) and for review pursuant to the Atomic Energy Act (42 U.S.C. 218(c)).
7. A record from this system of records may be disclosed, as a routine use, to the Administrator, General Services, or his/her designee, during an inspection of records conducted by GSA as part of that agency's responsibility to recommend improvements in records management practices and programs, under authority of 44 U.S.C. 2904 and 2906. Such disclosure shall be made in accordance with the GSA regulations governing inspection of records for this purpose, and any other relevant (i.e., GSA or Commerce) directive. Such disclosure shall not be used to make determinations about individuals.
8. A record from this system of records may be disclosed, as a routine use, to the public after either publication of the application pursuant to 35 U.S.C. 122(b) or issuance of a patent pursuant to 35 U.S.C. 151. Further, a record may be disclosed, subject to the limitations of 37 CFR 1.14, as a routine use, to the public if the record was filed in an application which became abandoned or in which the proceedings were terminated and which application is referenced by either a published application, an application open to public inspection or an issued patent.
9. A record from this system of records may be disclosed, as a routine use, to a Federal, State, or local law enforcement agency, if the USPTO becomes aware of a violation or potential violation of law or regulation.

(19) BUNDESREPUBLIK DEUTSCHLAND

DEUTSCHES PATENTAMT

(12) Gebrauchsmuster U1

(10)

(11) Rollennummer G 87 11 784.3

(51) Hauptklasse B25C 1/06

Nebenklasse(n) B25C 5/15

(22) Anmeldetag 31.08.87

(47) Eintragungstag 05.11.87

(43) Bekanntmachung im Patentblatt 17.12.87

(54) Bezeichnung des Gegenstandes
Elektrisch betriebenes Eintreibgerät

(71) Name und Wohnsitz des Inhabers
Demba Metallwarenfabrik GmbH, 2072 Bargteheide, DE

(74) Name und Wohnsitz des Vertreters
Hauck, H., Dipl.-Ing. Dipl.-Wirtsch.-Ing., 8000 München; Schmitz, W., Dipl.-Phys.; Graalfs, E., Dipl.-Ing., 2000 Hamburg; Wehnert, W., Dipl.-Ing., 8000 München; Döring, W., Dipl.-Wirtsch.-Ing. Dr.-Ing., Pat.-Anw., 4000 Düsseldorf; Reichert, W., Rechtsanw., 2000 Hamburg

(56) Recherchenergebnis:

Druckschriften:
DE 86 20 799 U1 EP 0[illegible] 24 643 A2

G 0203
181

ANWALTSSOZIETÄT
DR.-ING. H. NEGENDANK (1973)
HAUCK, SCHMITZ, GRAALFS, WEHNERT, DÖRING
HAMBURG · MÜNCHEN · DÜSSELDORF

34 171-19

PATENT- U. RECHTSANW., NEUER WALL 41, 2000 HAMBURG 36

WALDEMAR SCHMITZ, Dipl.-Phys., Patentanwalt
EDO GRAALFS, Dipl.-Ing., Patentanwalt
HEIDI REICHERT, Rechtsanwalt
Neuer Wall 41, 2000 Hamburg 36
Telefon (040) 36 67 55, Fax 49-40-364039
Telex 0211769 inpat d

HANS HAUCK, Dipl.-Ing., Patentanwalt
WERNER WEHNERT, Dipl.-Ing., Patentanwalt
Mozartstraße 23, 8000 München 2
Telefon (089) 53 92 36, Fax 49-89-531239
Telex 05216553 pamu d

WOLFGANG DÖRING, Dr.-Ing., Patentanwalt
Mörikestraße 18, 4000 Düsseldorf 30
Telefon (0211) 45 07 85
Telex 858 40 44 dopa d

DEMBA METALLWARENFABRIK GmbH
Rudolf-Diesel-Str. 7

2072 Bargteheide

ZUSTELLUNGSANSCHRIFT / PLEASE REPLY TO

HAMBURG, 26. August 1987

Elektrisch betriebenes Eintreibgerät

Die Neuerung bezieht sich auf ein elektrisch betriebenes Eintreibgerät gemäß dem Oberbegriff des Anspruchs 1.

Eintreibstößel von elektrisch betriebenen Eintreibgeräten können zum Beispiel mit Hilfe eines Schwingankers oder eines Tauchankers betätigt werden. Eine weitere Antriebsmöglichkeit besteht in einem Elektromotor, der zum Beispiel über ein Getriebe auf eine Zahnstange wirkt (DE-Gm 16 84 420). Bei Drehung des Motors wird die Zahnstange von einem Zahnsegment erfaßt, wodurch der Eintreibstößel entgegen einer Feder in eine angehobene Lage gebracht wird. In dem Augenblick, in dem der letzte Zahn des Zahnsegments die Zahnstange freigibt, wird diese durch die Feder nach unten

.../2

HKU0002262
RX-0154.2
Koki Holdings America Ltd.
Ex. 1002, p. 25

beschleunigt und ermöglicht das Eintreiben des Befestigungsmittels.

Es ist auch bekannt, anstelle eines mit dem Elektromotor verbundenen Zahnsegments einen Exzenter zu verwenden, der mit einem Nocken an dem Eintreibstößel zusammenwirkt (US-PS 3 299 967 oder EP 0 170 030).

Bei den elektrisch betriebenen Eintreibgeräten wird der elektrische Antrieb, etwa der Elektromotor, mit Hilfe des Auslösers eingeschaltet. Soll ein einziger Eintreibschlag verwendet werden, kann die Bedienungsperson normalerweise den Auslöser nicht rechtzeitig freigeben, um zu verhindern, daß ein weiterer Eintreibschlag ausgeführt wird. Hierbei besteht die Gefahr, daß ein weiteres Befestigungsmittel aus dem Magazin in den Ausstoßkanal nachrückt und eingetreiben wird. Selbst wenn die Bedienungsperson durch rechtzeitiges Freigeben des Auslösers verhindert, daß der Eintreibstößel erneut in die obere Totpunktstellung gelangt, wird hierbei unnötig Energie vergeudet. Bei einem Netzanschluß spielt der zusätzliche Energieverbrauch keine Rolle. Bei batteriebetriebenen Geräten ist nach Möglichkeit jeder unnötige Energieverbrauch zu vermeiden. Daher ist bereits bekanntgeworden, den Schalter zum Einschalten des Elektromotors über ein Gestänge zu betätigen, das mit dem Auslöser

.../3

HKU0002263
RX-01543
Koki Holdings America Ltd.
Ex. 1002, p. 26

des Eintreibgeräts zusammenwirkt (DE-Gm 87 04 666). Am Antriebsrad ist ein Vorsprung oder dergleichen angeordnet, das das Gestänge mit dem Betätigungselement des Schalters außer Eingriff bringt, nachdem das Antriebsrad den Eintreibstößel in die obere Totpunktstellung gebracht hat.

Es kann jedoch geschehen, daß bei dem bekannten Eintreibgerät der Auslöser losgelassen wird, bevor ein Eintreibschlag ausgeführt werden kann, d.h. der Eintreibstößel die obere Totpunktstellung erreicht hat. Dadurch wird dem Befestigungselement keine ausreichende Eintreibkraft erteilt. Diese wird noch dadurch verringert, daß beim Arbeitshub das Getriebe und der Elektromotor von der Eintreibfeder "mitgenommen" werden müssen. Es muß daher ein erneuter Eintreibschlag gestartet werden. Ferner kann es vorkommen, daß so vorzeitig abgeschaltet wird, daß überhaupt kein Befestigungsmittel abgeschert wird. In beiden Fällen bedeutet dies eine Energievergeudung, was bei batteriegetriebenen Geräten nachteilig ist. Ferner wird eine Betriebserschwernis verursacht. Schließlich kann auch vorkommen, daß der Eintreibstößel in einer Zwischenstellung verbleibt. In diesem Fall ist ein Eingriff von außen notwendig, um den Eintreibstößel wieder in die Ausgangsstellung zu bringen.

.../4

HKU0002264
RX-0154.4
Koki Holdings America Ltd.
Ex. 1002, p. 27

Der Neuerung liegt daher die Aufgabe zugrunde, ein motorisch betriebenes Eintreibgerät so auszubilden, daß es einerseits nur so viel Energie verbraucht wie für einen Eintreibschlag notwendig ist und andererseits sicherstellt, daß der Eintreibschlag mit Sicherheit auch ausgeführt wird.

Diese Aufgabe wird durch die Merkmale des Kennzeichnungsteils des Anspruchs 1 gelöst.

Beim neuerungsgemäßen Eintreibgerät ist eine Entkopplung zwischen der Auslöserbetätigung und dem Antrieb des Stößels vorgesehen. Das Gestänge wird mit Hilfe der Verriegelung in Eingriff mit dem Betätigungselement des elektrischen Schalters gehalten, auch wenn der Auslöser - etwa vor Beendigung eines Eintreibschlages - losgelassen wird. Auf diese Weise ist sichergestellt, daß mit Sicherheit ein vollständiger Ein-treibschlag ausgeführt wird, wenn eine Auslösung in Gang gesetzt wurde. Diese Auslösung ist indessen unabhängig davon, wie lange der Auslöser betätigt bleibt. Ist hingegen der Eintreibschlag ausgeführt, wird in bekannter Weise das Gestänge mit dem Schalter außer Eingriff gebracht, so daß der Elektromotor ausgeschaltet wird. Gleichzeitig hiermit erfolgt die Entriegelung des Gestänges, so daß das Gestänge durch Federkraft in seine Ausgangsstellung zurückgebracht wird.

.../5

HKU0002265
RX-0154.5
Koki Holdings America Ltd.
Ex. 1002, p. 28

Das neuerungsgemäße Gerät ist nicht beschränkt auf die Art der Kraftübertragung vom Elektromotor auf den Eintreibstößel. So kann beispielsweise der Eintreibstößel mit einer Zahnstange verbunden sein, und das Antriebsrad weist ein Zahnsegment auf, mit dem die Zahnstange bei einer Umdrehung des Antriebsrads in die Totpunktstellung gebracht wird. Wahlweise kann ein Exzenter vorgesehen werden, der mit einem Nocken zusammenwirkt, um den Eintreibstößel zu betätigen. Schließlich kann auch eine Kopplung des Antriebsrads mit dem Eintreibstößel über eine Hebelverbindung oder dergleichen stattfinden. Die mit dem neuerungsgemäßen Gerät erzielbaren Vorteile gelten für alle derartige Antriebsarten gleichermaßen.

Bei dem zuletzt beschriebenen bekannten Gerät ist das Gestänge von einem Hebel gebildet, der zwischen dem Auslöser und dem Schalter angeordnet ist und durch einen Betätigungsabschnitt am Antriebsrad wahlweise mit dem Schalter außer Eingriff bringbar ist. In diesem Zusammenhang sieht eine Ausgestaltung der Neuerung vor, daß der Hebel über eine Langlochverbindung mit dem Auslöser verbunden ist. Eine Feder beaufschlagt den Hebel derart, daß der Auslöser in unmittelbarem Kontakt mit dem Hebel steht. Wird der Hebel heruntergedrückt, wird er so verriegelt, daß der Schalter für den Elektromotor eingeschaltet bleibt. Der Auslöser

.../6

HKU0002266
RX-0154 6
Koki Holdings America Ltd.
Ex. 1002, p. 29

9

kann hingegen in die Ruheposition zurückkehren, ohne daß der Hebel nachfolgt. Eine andere Alternative sieht vor, daß der nicht mit dem Auslöser verbundene Hebel schwenkbar und begrenzt längsbeweglich gelagert ist. Hierbei ist der Auslöser vollständig vom Gestänge getrennt und tritt mit dem Gestänge nur während der Betätigungsphase in Eingriff. Das Verriegelungselement kann nach einer weiteren Ausgestaltung der Neuerung von einem federbeaufschlagten Nocken gebildet sein, während der Verriegelungsabschnitt von einer Rastausnehmung geformt sein kann.

Bei dem oben beschriebenen neuerungsgemäßen Eintreibgerät kann der Auslöser jederzeit in die Ruhestellung zurückkehren. Es ist jedoch auch denkbar und kann ggf. vorteilhaft sein, keine begrenzte Entkopplung zwischen Auslöser und Betätigungsgestänge vorzunehmen. In diesem Fall bleibt der Auslöser in der betätigten Position, wenn das Gestänge verriegelt ist und gelangt erst wieder in die Ausgangsstellung, wenn die Verriegelung aufgehoben worden ist. Die Verriegelung muß dann zusätzlich der Federkraft am Auslöser widerstehen.

Wie bereits ausgeführt, ist für das neuerungsgemäße Eintreibgerät kennzeichnend, daß eine Abschaltung des Elektromotors erst dann erfolgt, wenn das Antriebsrad nahezu eine

.../7

HKU0002267
RX-0154.7
Koki Holdings America Ltd.
Ex. 1002, p. 30

Umdrehung vollzogen hat. Es kann indessen geschehen, daß in der Betätigungsphase eine Überlast eintritt. Selbst wenn sie von der Bedienungsperson bemerkt wird, kann dieser Überlast nicht durch Loslassen des Auslösers begegnet werden, da ein Loslassen des Auslösers nicht zum Abschalten des Elektromotors führt. Daher ist es zweckmäßig, dem elektrischen Antrieb eine Überlastsicherung zuzuordnen, beispielsweise in Form einer Bimetallsicherung, einer Autoschmelzsicherung oder dergleichen, die für eine Abschaltung des Elektromotors im Überlastfall sorgen.

Die Neuerung wird nachfolgend anhand von Zeichnungen näher beschrieben.

Fig. 1 zeigt sehr schematisch den Eintreibstößel, den Antrieb sowie den Auslöser des neuerungsgemäßen Eintreibgeräts im Ruhezustand.

Fig. 2 zeigt die gleiche Anordnung während der Betätigung des Eintreibgeräts.

Fig. 3 zeigt den Zustand des aktivierten Eintreibgeräts bei losgelassenem Auslösehebel.

.../8

HKU0002268
RX-01548
Koki Holdings America Ltd.
Ex. 1002, p. 31

Fig. 4 zeigt die gleiche Anordnung wie die vorangegangenen Figuren während der automatischen Abschaltung des Antriebs.

Bevor auf die in den Zeichnungen dargestellten Einzelheiten näher eingegangen wird, sei vorangestellt, daß jedes der beschriebenen Merkmale für sich oder in Verbindung mit Merkmalen der Ansprüche von neuerungswesentlicher Bedeutung ist.

Ein Eintreibstößel 10 eines nur sehr schematisch dargestellten batteriebetriebenen Eintreibgerätes ist in einem nicht gezeigten Eintreibkanal des Gerätes geführt und mit einer Zahnstange 11 verbunden, die eine Trapezverzahnung 12 aufweist. Die Zahnstange besitzt mindestens eine Führungsrippe 13, mit der sie in einer geeigneten Führungsnut im Gehäuse geführt ist. Sie liegt in der unteren Totpunktlage gegen einen Anschlag 14 an. Auf der der Eintreibstößel gegenüberliegenden Seite ist die Zahnstange 11 von einer Eintreibfeder 15 beaufschlagt, die mit dem anderen Ende gegen ein Widerlager 16 anliegt. Das Eintreibgerät enthält einen Elektromotor, der unmittelbar oder über ein Getriebe mit einem Antriebsrad 17 in Verbindung ist, das in Richtung des Pfeils 18 angetrieben wird. Das Antriebsrad 17 weist ein Zahnsegment 19 auf, das sich um etwa 120° über

.../9

HKU0002269
RX-01549
Koki Holdings America Ltd.
Ex. 1002, p. 32

den Umfang des Rades 17 erstreckt. Die trapezförmige Zahnung 19 des Rades 17 wirkt mit der trapezförmigen Zahnung 12 der Zahnstange 11 zusammen. Auf einer Stirnseite des Antriebsrads 17 ist ein Zapfen 20 angebracht.

Das Eintreibgerät wird von einem Auslösehebel 21 betätigt, der bekannterweise über eine Feder 22 in die Ausgangsposition vorgespannt ist. Am Auslösehebel 21 ist bei 21a eine nach unten weisende Nase vorgesehen. Eine Stange 24 ist mittels eines Lagerstiftes 40 an einem Bauteil 41 gelagert. Der Stift 40 erstreckt sich durch ein Langloch 42 des Bauteils 41. Eine Feder 43 drückt die Stange 24 nach oben in Richtung Auslösehebel 21.

Die Stange 24 dient zur Betätigung eines Schalters 26, der ein Betätigungselement 25 aufweist. Mit dem Schalter 26 wird der nicht gezeigte Elektromotor ein- und ausgeschaltet. Die Stange 24 weist außerdem eine rechteckige Ausnehmung 45 auf. In einer Führung 46 ist ein keilförmiges Verriegelungselement 47 gleitend verschiebbar geführt. Es wird von einer Feder 48 nach außen in Richtung der Stange 24 gedrückt. Auf der der Führung 46 gegenüberliegenden Seite ist eine Feder 27 vorgesehen, welche die Stange 24 in Richtung Führung 46 bzw. in Richtung Antriebsrad 17 vorspannt.

.../10

HKU0002270
RX-0154.10
Koki Holdings America Ltd.
Ex. 1002, p. 33

Die gezeigte Anordnung arbeitet wie folgt.

Die Ruheposition gibt Fig. 1 wieder. Der Auslöser 21 befindet sich in der Ausgangsstellung und die Stange 24 in der angehobenen Stellung in schwacher Anlage an der Nase 21a des Auslösers 21 oder kurz darunter. Das federbelastetete Betätigungselement 25 des Schalters ist in der Aus-Stellung,da das untere Ende der Stange 10 einen Abstand von ihm hat. Die Stange 24 wird durch die Feder 27 gegen das offene Ende der Führung 46 gehalten. Die Feder 27 ist ersichtlich stärker als die Feder 48. Wird nun wie in Fig. 2 gezeigt, der Auslöser 21 durch Daumendruck heruntergedrückt, wird auch die Stange 24 nach unten gedrückt und betätigt das Betätigungselement 25 des Schalters 26. Der Motor ist eingeschaltet, und das Antriebsrad 27 beginnt zu drehen. Die Zähne des Zahnsegments 29 wirken mit der Zahnstange 11 zusammen und heben diese gegen den Federdruck nach oben an bis in eine obere Totpunktstellung, die in Fig. 4 erreicht ist. Im Betätigungszustand ist die Ausnehmung 45 mit dem Verriegelungselement 47 ausgerichtet, so daß das Verriegelungselement in die Ausnehmung eintritt und die Stange in dieser Lage verriegelt, wie in Fig. 3 dargestellt. Ein Loslassen des Auslösers 21, wie in Fig. 3 zu erkennen, führt nicht zu einem Ausschalten des Motors.

.../11

HKU0002271
RX-0154.11
Koki Holdings America Ltd.
Ex. 1002, p. 34

In dem Augenblick, in dem das Zahnsegment 19 die Zahnung 12 der Zahnstange 11 verläßt, drückt die Eintreibfeder 15 die Zahnstange 11 und damit der Eintreibstößel 10 nach unten, so daß ein Eintreibschlag ausgeführt wird. Da der Antriebsmotor das Antriebsrad 17 weiter dreht, greift der Nocken 20 am Antriebsrad 17 seitlich an die Stange 24 an, unmittelbar nach dem Trennen von Zahnstange 11 und Antriebsrad 17. Die Stange 24 wird in Uhrzeigerrichtung verschwenkt. Sie rutscht dadurch vom Betätigungselement 25, so daß dieses in seine Ausstellung zurückkehren kann. Außerdem wird die Stange 24 dadurch entriegelt und kann mit Hilfe der Feder 43 in die Ausgangsstellung nach Fig. 1 zurückkehren.

Es versteht sich, daß das keilförmige Verriegelungselement 47 nur teilweise aus der Führung 46 heraussteht und durch einen entsprechenden Anschlag gehindert ist, vollständig herauszufallen.

.../12

HKU0002272
RX-0154.12
Koki Holdings America Ltd.
Ex. 1002, p. 35

Ansprüche:

1. Elektrisch betriebenes Eintreibgerät für Klammern, Nägel oder dergleichen, mit einem Elektromotor, einem mit dem Elektromotor gekoppelten Antriebsrad, einem Eintreibstößel, der wirkungsmäßig mit dem Antriebsrad gekoppelt ist derart, daß bei einer Umdrehung des Antriebsrads der Eintreibstößel gegen die Kraft einer Feder in die obere Totpunktlage angehoben wird und im Anschluß daran einen Arbeitshub ausführt, einem Auslöser zur Betätigung des Elektromotors über einen ein Betätigungselement aufweisenden elektrischen Schalter, einem Gescänge zwischen dem Auslöser und dem Schalter, das im unbetätigten Zustand des Auslösers automatisch zum Betätigungselement des Schalters ausgerichtet ist und einem Betätigungsabschnitt am Antriebsrad, das so angeordnet ist, daß es das Gestänge mit dem Betätigungselement außer Eingriff bringt, wenn der Eintreibstößel seine obere Totpunktlage erreicht hat, dadurch gekennzeichnet, daß das Gestänge (24) mittels einer Feder (43) zum Auslöser (21) hin vorgespannt ist und ein federvorgespanntes Verriegelungselement (47) vorgesehen ist, das mit einem Verriegelungsabschnitt (45) am Gestänge (24) zusammenwirkt und das Gestänge (24) in

.../13

HKU0002273
RX-0154.13
Koki Holdings America Ltd.
Ex. 1002, p. 36

einer das Betätigungselement (25) betätigenden Stellung hält, bevor der Betätigungsabschnitt (20) die Betätigung unwirksam macht.

2. Eintreibgerät nach Anspruch 1, dadurch gekennzeichnet, daß das Gestänge einen schwenkbar gelagerten Hebel aufweist.

3. Eintreibgerät nach Anspruch 2, dadurch gekennzeichnet, daß der Hebel (24) über eine Langlochverbindung mit dem Auslöser verbunden ist.

4. Eintreibgerät nach Anspruch 2, dadurch gekennzeichnet, daß der nicht mit dem Auslöser (21) verbundene Hebel (24) schwenkbar und begrenzt längsbeweglich gelagert ist.

5. Eintreibgerät nach einem der Ansprüche 1 bis 4, dadurch gekennzeichnet, daß das Verriegelungselement (47) von einem federbetätigten Nocken gebildet wird.

6. Eintreibgerät nach einem der Ansprüche 1 bis 4, dadurch gekennzeichnet, daß der Verriegelungsabschnitt (45) von einer Rastausnehmung im Hebel (24) gebildet wird.

HKU0002274
RX-0154.14
Koki Holdings America Ltd.
Ex. 1002, p. 37

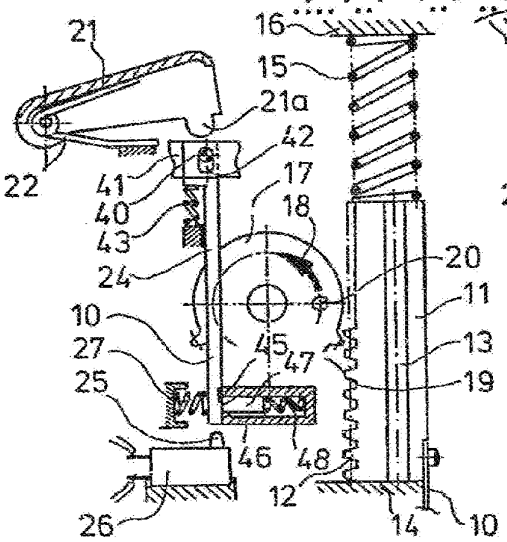

FIG.1

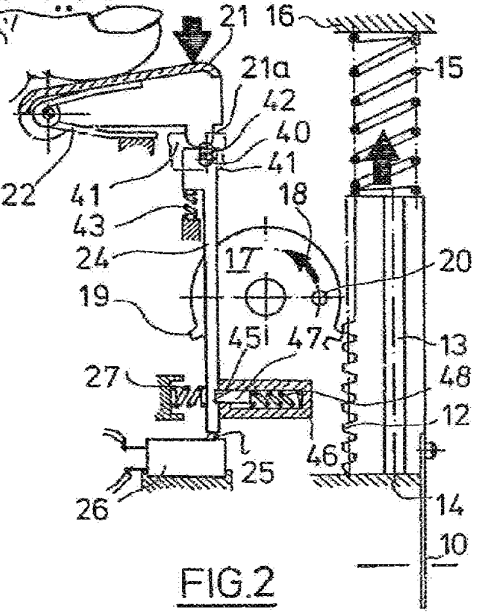

FIG.2

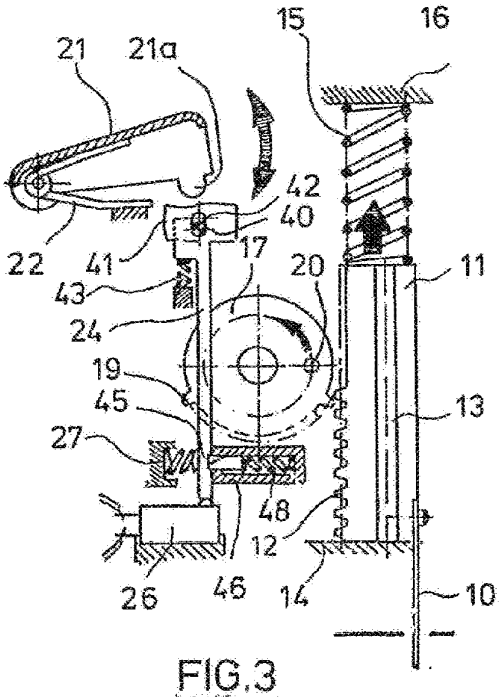

FIG.3

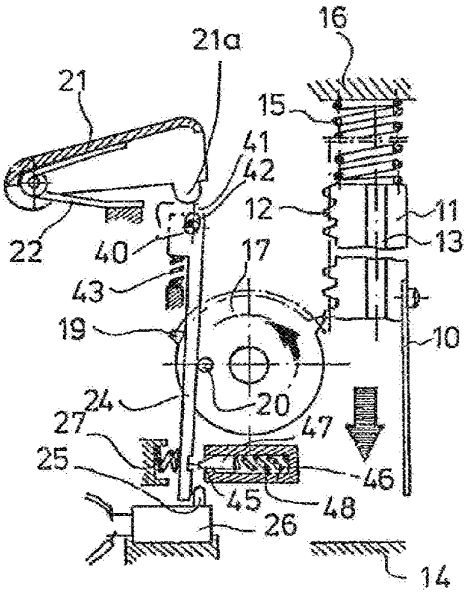

FIG.4

Patent Translate
Powered by EPO and Google

Notice

This translation is machine-generated. It cannot be guaranteed that it is intelligible, accurate, complete, reliable or fit for specific purposes. Critical decisions, such as commercially relevant or financial decisions, should not be based on machine-translation output.

DESCRIPTION DE8711784

<Desc / Clms Page number 1>

<Desc/Clms Page number 1>

The invention relates to an electrically operated driving device according to the preamble of claim i.

Elektrisch betriebenes Eintreibgerät Die Neuerung bezieht sich auf ein elektrisch betriebenes Eintreibgerät gemäss dem Oberbegriff des Anspruchs i.

Driving plungers of electrically operated driving devices can be actuated, for example, by means of a swing armature or a submerged armature. A further drive possibility consists in an electric motor which, for example, acts on a toothed rack via a gearing (German Patent No. 16 84 420). Upon rotation of the motor, the rack is captured by a toothed segment, whereby the drive ram is brought into a raised position against a spring. At the moment when the last tooth of the toothed segment releases the tooth rod, this becomes downward through the spring

---

Eintreibstössel von elektrisch betriebenen Eintreibgeräten können zum Beispiel mit Hilfe eines Schwingankers oder eines Tauchankers betätigt werden. Eine weitere Antriebsmöglichkeit besteht in einem Elektromotor, der zum Beispiel über ein Getriebe auf eine Zahnstange wirkt (DE-Gm 16 84 420). Bei Drehung des Motors wird die Zahnstange von einem Zahnsegment erfasst, wodurch der Eintreibstössel entgegen einer Feder in eine angehobene Lage gebracht wird. In dem Augenblick, in dem der letzte Zahn des Zahnsegments die Zahnstange freigibt, wird diese durch die Feder nach unten

HKU0002249
RX-0155.1
Koki Holdings America Ltd.
Ex. 1002, p. 39

<Desc/Clms Page number 2>

Accelerated ulld allows driving the fastener.

---

beschleunigt ulld ermöglicht das Eintreiben des Befestigungsmittels.

It is also known to use an eccentric which interacts with a cam on the driving plunger instead of a toothed segment connected to the electric motor (US Pat

---

Es ist auch bekannt, anstelle eines mit dem Elektromotor Verbundenen Zahnsegments einen Exzenter zu verwenden, der mit einem Nocken an dem Eintreibstössel @Ugammenwirkt (US-PS

[3]
3299,967 or EP 0 170 03n).

---

3 299 967 oder EP 0 170 03n).

In the case of the electrically operated driving devices, the electric drive, for example the electric motor, is switched on with the aid of the trigger. If a single flip-flop is used, the operating probe can not normally release the trigger in time to prevent another flip-flop. In this case, there is the risk that a further fastening means will move out of the magazine into the ejection channel and be driven in. Even if the operator prevents the trigger from being pushed back into the upper position by releasing the trigger in time, Dead point position, energy is wasted unnecessarily. In the case of a mains connection, the additional energy consumption plays no role.

Bei den elektrisch betriebenen Eintreibgeraten wird der elektrische Antrieb, etwa der Elektromotur, mit Hilfe des Auslösers eingeschaltet. Soll ein einziger Eintreibschlag verwendet werden, kann die Bedienungspe'son normalerweise den Auslöser nicht rechtzeitig freigeben, um zu verhindern, dass ein weiterer Eintreibschlag ausgeführt wird. Hierbei besteht die Gefahr, dass ein weiteres Befestigungsmittel aus dem Magazin in den Ausstosskanal nachrückt und eingetreiben wird. Selbst wenn die Bedienungsperson durch rechtzeitiges Freigeben des Auslösers verhindert, dass der Ein- treibstössel erneut in die ober ? Totpunktstellung gelangt, wird hierbei unnötig Energie vergeudet. Bei einem Netzanschluss spielt der zusätzliche Energieverbrauch keine Rolle.

HKU0002250
RX-0155.2
Koki Holdings America Ltd.
Ex. 1002, p. 40

In the case of battery operated devices, any unnecessary energy consumption must be avoided wherever possible. Therefore, it has already been known to actuate the switch for switching on the electric motor via a linkage which is connected to the trigger

---

Bei batteriebetriebenen Geräten ist nach Möglichkeit jeder unnötige Energieverbrauch zu vermeiden. Daher ist bereits bekanntgeworden, den Schalter zum Einschalten des Elektromotors über ein Gestänge zu betätigen, das mit dem Auslöser

<Desc / Clms Page number 3>

<Desc/Clms Page number 3>

of the driving device (DE-Gm 87 04 666). A projection or the like is arranged on the drive wheel which disengages the linkage with the actuating element of the switch after the drive wheel has brought the driving plunger into the top dead center position.

---

des Eintreibgeräts zusammenwirkt (DE-Gm 87 04 666). Am An- trie@srad ist ein Vorsprung oder dergleichen angeordnet, das das Gestänge mit dem Betätigungselement des Schalters ausser Eingriff bringt, nachdem das Antriebsrad den Eintreib- stössel in die obere Totpunktstellung gebracht hat.

However, it may happen that, in the known driving condition, the trigger is released before a driving stroke can be performed, H. the driving plunger has reached the top dead center position. This is the reason why. a sufficient driving force is not given.

Es kann jedoch geschehen, dass bei dem bekannten Eintreib- guität der Auslöser losgelassen wird, bevor ein Eintreibschlag ausgeführt werden kann, d. h. der Eintreibstössel die obere Totpunktstellung erreicht hat. Dadurch wird dem Be- festi. gungselement keine ausreichende Eintreibkraft erteilt.

This is further reduced by the fact that during the working stroke the gearing and the electric motor must be "carried" by the driving spring. Ee. it is necessary to start a new drive-in. In addition, it may happen that this is prematurely switched off in such a way that no fastening means is sheared at all. In both cases, this means a waste of energy, which is disadvantageous with battery-powered devices. Further, an operation trouble is caused. Finally, it is also possible for the driving

HKU0002251
RX-0155.3
Koki Holdings America Ltd.
Ex. 1002, p. 41

plunger to remain in an intermediate position. In this case, an external action is required to bring the driving plunger back into the initial position.

Diese wird noch dadurch verringert, dass beim Arbeitshub das Getriebe und der Elektromotor von der Eintreibfeder "mitgenommen" werden müssen. Ee. muss daher ein erneuter Eintreibschlag gestartet werden. Ferner kann es vorkommen, dass so vorzeitig abgeschaltet wird, dass überhaupt kein Befestigungsmittel abgeschert wird. In beiden Fällen bedeutet dies eine Energievergeudung, was bei batteriegetriebenen Geräten nachteilig ist. Ferner wird eine Betriebserschwernis verursacht. Schliesslich kann auch vorkommen, dass der Eintreibstössel in einer Zwischenstellung verbleibt. In dieser Fall ist ein Eingriff von aussen notwendig, um den Eintreibstössel wieder in die Ausgangsstellung zu bringen.

<Desc / Clms Page number 4>

<Desc/Clms Page number 4>

The invention is based on the task of designing a motor-driven driving device such that, on the one hand, it consumes only as much energy as is necessary for a drive-in impact and on the other hand ensures that the driving-in impact is also carried out with certainty.

Der Neuerung liegt jaher die Aufgabe zugrunde, ein moto- risch betriebenes Eintreibgerät so auszubilden, dass es einerseits nur so viel Energie verbraucht wie für einen Eintreibschlag notwendig ist und andererseits sicherstellt dass der Eintreibschlag mit Sicherheit auch ausgeführt wird.

This task is solved by the distinctive design part of claim 1.

DieseAufgabewirddurchdieMerkmaledesKennezeichnungsteils des Anspruchs 1 gelöst.

In the novel drive-in device, decoupling is provided between the trigger actuation and the drive of the ram. The linkage is held in engagement with the actuating element of the electrical switch by means of the locking device, even if the trigger is released approximately before the end of a driving stroke. In this way, it is ensured that a complete one-way impact is certainly carried out when a trip has been started. However, this triggering is independent of how long the trigger remains actuated. If, on the other hand, the drive-in stop is carried out, the linkage is disengaged with the switch in a known manner so that the electric motor is switched off. At the same time, the linkage is unlocked so that the linkage is brought back into its initial position by spring force.

HKU0002252
RX-0155.4
Koki Holdings America Ltd.
Ex. 1002, p. 42

Beim neuerungsgemässen Eintreibgerät ist eine Entkopplung zwischen der Auslöserbetätigung und dem Antrieb des Stössels vorgesehen. Das Gestänge wird mit Hilfe der Verriegelung in Eingriff mit dem Betätigungselement des elektrischen Schalters gehalten, auch wenn der Auslöser-etwa vor Beendigung eines Eintreibschlages-losgelassen wird. Auf diese Weise ist sichergestellt, dass mit Sicherheit ein vollständiger Ein-treibschlag ausgeführt wird, wenn eine Auslösung in Gang gesetzt wurde. Diese Auslösung ist indessen unabhängig davon, wie lange der Auslöser betätigt bleibt. Ist hingegen der Eintreibschlag ausgeführt, wird in bekannter Weise das Gestänge mit dem Schalter ausser Eingriff gebracht, so dass der Elektromotor ausgeschaltet wird. Gleichzeitig hiermit erfolgt die Entriegelung des Gestänges, so dass das Gestänge durch Federkraft in seine Ausgangsstellung zurückgebracht wird.

<Desc / Clms Page number 5>

<Desc/Clms Page number 5>

The novel device is not limited to the type of power transmission from the electric motor to the driving plunger. For example, the driving plunger can be connected to a toothed rack, and the drive wheel has a toothed segment with which the toothed rack is brought into the dead-center position during a rotation of the drive wheel.

Das neuerungsgemässe Gerät ist nicht beschränkt auf die Art der Kraftübertragung vom Elektromotor auf den Eintreib- stössel. So kann beispielsweise der Eintreibstössel mit einer Zahnstange verbunden sein, und das Antriebsrad weist ein Zahnsegment auf, mit dem die Zahnstange bei einer Umdrehung des Antriebsrads in die Totpunktstellung gebracht wird.

Optionally, an eccentric may be provided which cooperates with a cam to actuate the driving plunger. Finally, a coupling of the drive wheel with the driving plunger can also take place via a lever connection or the like. The advantages which can be achieved with the novel device apply equally to all such drive types.

Wahlweise kann ein Exzenter vorgesehen werden, der mit einem Nocken zusammenwirkt, um den Eintreibstössel zu betätigen. Schliesslich kann auch eine Kopplung des Antriebsrads mit dem Eintreibstössel über eine Hebelverbindung oder dergleichen stattfinden. Die mit dem neuerungsgemässen Gerät erzielbaren Vorteile gelten für alle derartige Antriebsarten gleichermassen.

HKU0002253
RX-0155.5
Koki Holdings America Ltd.
Ex. 1002, p. 43

In the known device described last, the linkage is formed by a lever which is arranged between the trigger and the switch and which can be selectively disengaged from the drive wheel by an actuating section on the drive wheel. In this connection, an embodiment of the innovation provides that the lever is connected to the trigger by way of a long-hole connection. A spring biases the lever such that the trigger is in direct contact with the lever. If the lever is pushed down, it is locked so that the switch for the electric motor remains switched on, The release

---

Bei dem zuletzt beschriebenen bekannten Gerät ist das Gestänge von einem Hebel gebildet, der zwischen dem Auslöser und dem Schalter angeordnet ist und durch einen Betätigungsabschnitt am Antriebsrad wahlweise mit dem Schalter ausser Eingriff bringbar ist. In diesem Zusammenhang sieht eine Ausgestaltung der Neuerung vor, dass der Hebel über eine Langlochverbindung mit dem Auslöser verbunden ist. Eine Feder beaufschlagt den Hebel derart, dass der Auslöser in unmittelbarem Kontakt mit dem Hebel steht. Wird der Hebel heruntergedrückt, wird er so verriegelt, dass der Schalter für den Elektromotor eingeschaltet bleibt, Der Auslöser

---

<Desc/Clms Page number 6>

can return to the rest position without the lever following. Another alternative provides that the lever, which is not connected to the trigger, can be pivoted and limited longitudinally movably. In this case, the trigger is completely separated from the linkage and engages with the linkage only during the actuation phase.

---

kann hingegen in die Ruheposition zurückkehren, ohne dass der Hebel nachfolgt. Eine andere Alternative sieht vor, dass der nicht mit dem Auslöser verbundene Hebel schwenkbar und begrenzt längsbeweglich gelagert ist. Hierbei ist der Auslöser vollständig vom Gestänge getrennt und tritt mit dem Gestänge nur während der Betätigungsphase in Eingriff.

According to a further embodiment of the invention, the locking element can be formed by a spring-loaded cam, while the locking section can be formed by a latching recess.

Das Verriegelungselement kann nach einer weiteren Ausgestaltung der Neuerung von einem federbeaufschlagten Nocken gebildet sein, während der Verriegelungsabschnitt von einer Rastausnehmung geformt sein kann.

HKU0002254
RX-0155.6
Koki Holdings America Ltd.
Ex. 1002, p. 44

In the above-described novel driving tool, the trigger can return to the rest position at any time. However, it is also conceivable and may possibly be advantageous not to perform a limited decoupling between the trigger and the actuating linkage. In this case, the trigger remains in the actuated position when the linkage is locked and only returns to the initial position when the lock has been lifted.

Bei dem oben beschriebenen neuerungsgemässen Eintreibgerät kann der Auslöser jederzeit in die Ruhestellung zurückkehren. Es ist jedoch auch denkbar und kann ggf. vorteilhaft sein, keine begrenzte Entkopplung zwischen Auslöser und Betätigungsgestänge vorzunehmen. In diesem Fall bleibt der Auslöser in der betätigten Position, wenn das Gestänge verriegelt ist und gelangt erst wieder in die Ausgangsstellung, wenn die Verriegelung aufgehoben worden ist.

The locking must then additionally resist the spring force on the release.

Die Verriegelung muss dann zusätzlich der Federkraft am Auslöser widerstehen.

As already stated, it is characteristic for the new driving device that the electric motor is not switched off until the drive wheel has almost reached a position

---

Wie bereits ausgeführt, ist für das neuerungsgemässe Eintreibgerät kennzeichnend, dass eine Abschaltung des Elektromotors erst dann erfolgt Wenn das Antriebsrad nahezu eine

<Desc / Clms Page number 7>

<Desc/Clms Page number 7>

Rotation. However, overload can occur during the actuation phase. Even if noticed by the operator, this overload can not be countered by releasing the trigger, since releasing the trigger does not cause the electric motor to be switched off. It is therefore expedient to assign an overload safety device to the electric drive, for example in the form of a bimetallic safety device, a car fuse or the like, which provide for a disconnection of the electric motor in the event of an overload event. The invention is described in more detail below with reference to drawings.

Umdrehung vollzogen hat. Es kann indessen geschehen, dass in der Betätigungsphase eine Überlast eintritt. Selhst wenn sie von der Bedienungsperson bemerkt wird, kann dieser Überlast nicht durch Loslassen des Auslösers begegnet werden, da ein Loslassen des Auslösers nicht zum Abschalten des Elektromotors führt. Daher ist es zweckmässig, dem elektischen Antrieb eine

HKU0002255
RX-0155.7
Koki Holdings America Ltd.
Ex. 1002, p. 45

Überlastsicherung zuzuordnen, beispielsweise in Form einer Bimetallsicherung, einer Autoschmelzsicherung oder dergleichen, die für eine Abschaltung des Elektromotors im Überlastfall sorgen Die Neuerung wird nachfolgend anhand von Zeichnungen näher beschrieber.

DETAILED DESCRIPTION OF THE PREFERRED EMBODIMENTS FIG. 1 shows a schematic view of the drive pinion, the drive and the trigger of the drive-in device according to the invention in the rest state.

Fig. 1 zeigt sehr schematisch den Eintreibstössel, den Antrieb sowie den Auslöser des reuerungsgemässen Eintreibgeräts im Ruhezustand.

FIG. 2 shows the same arrangement during the actuation of the driving device.

Fig. 2 zeigt die gleiche Anordnung während der Betätigung des Eintreibgeräts.

FIG. 3 shows the state of the activated driving device when the release lever is released.

Fig. 3 zeigt den Zustand des aktivierten Eintreibgeräts bei losgelassenem Auslösehebel.

<Desc / Clms Page number 8>

<Desc/Clms Page number 8>

FIG. 4 shows the same arrangement as the preceding figures during the automatic disconnection of the drive.

Fig. 4 zeigt die gleiche Anordnung wie die vorangegangenen Figuren während der automatischen Abschaltung des Antriebs.

Before discussing the details detailed in the drawings, it is to be understood that each of the described features is essential for itself or in conjunction with features of the claims.

Bevor auf die in den Zeichnungen dargestellten Einzelheiten näher eingegangen wird, sei vorangestellt, dass jedes der beschriebenen Merkmale für sich oder in Verbindung mit Merkmalen der Ansprüche von neuerungswesentlicher Bedeutung ist.

HKU0002256
RX-0155.8
Koki Holdings America Ltd.
Ex. 1002, p. 46

A driving plunger 10 of a battery-operated driving device, which is shown only very schematically, is guided in a drive channel (not shown) of the device and is connected to a toothed rack 11 which has a trapezoidal toothing 12. The toothed rack has at least one spring rib 13 with which it is guided in a suitable guide groove in the housing. It bears against a stop 14 in the bottom dead center position. On the side opposite the driving tappet, the toothed rack 11 is acted upon by a drive-in spring 15, which bears against the abutment 16 with the other end. The driving device comprises an electric motor which is connected directly or via a transmission with a drive wheel 17, which is driven in the direction of the arrow 18. The drive wheel 17 has a toothed segment 19, which extends around approximately 1200

Ein Eintreibstössel 10 eines nur sehr schematisch darge- stellten batteriebetriebenen Eintreibgerätes ist in einem nicht gezeigten Eintreibkanal des Gerätes geführt und mit einer Zahnstange 11 verbunden, die eine Trapezverzahnung 12 aufweist. Die Zahnstange besitzt mindestens eine Früh- rungsrippe 13, mit der sie in einer geeigneten Führungsnut im Gehäuse geführt ist. Sie liegt in der unteren Totpunktlage gegen einen Anschlag 14 an. Auf der der Eintreibstössel gegenüberliegenden Seite ist die Zahnstange 11 von einer Eintreibfeder 15 beaufschlagt, die mit dem anderen Ende Gegen ein Widerlager 16 anliegt. Das Eintreibgerät enthält einen Elektromotor, der unmittelbar oder über tin Getriebe mit einem Antriebsrad 17 in Verbindung ist, das in Richtung des Pfeils 18 angetrieben wird. Das Antriebsrad 17 weist ein Zahnsegment 19 auf, das sich um etwa 1200 über

<Desc / Clms Page number 9>

<Desc/Clms Page number 9>

extends the circumference of the wheel 17. The trapezoidal toothing 19 of the wheel 17 co-operates with the trapezoidal tooth 12 of the tooth rod 11. A spigot 20 is mounted on an end face of the drive wheel 17.

---

den Umfang des Rades 17 erstreckt, Die trapezförmige Zahnung 19 des Rades 17 Wirkt mit der trapezförmigen Zahnung 12 der Zahnstange 11 zusammen. Auf einer Stirnseite des Antriebsrads 17 ist ein Zapfen 20 angebracht.

The driving device is actuated by a release lever 21, which is known to be biased into the starting position by means of a spring 22. At the triggering lever 21, a downwardly projecting nose is provided at 21a. A rod 24 is mounted on a component 41 by means of a bearing pin 46. The pin

HKU0002257
RX-0155.9
Koki Holdings America Ltd.
Ex. 1002, p. 47

40 extends through a long hole 42 of the component 41. A spring 43 pushes the rod, e 24 upwards in the direction of the release lever 21.

Das Eintreibgerät wird von einem Auslösehebel 21 betätigt, der bekannterweise über eine Feder 22 in die Ausgangsposition vorgespannt ist. Am Auslösehebel 21 ist bei 21a eine nach unten weisende Nase vorgesehen. Eine Stange 24 ist mittels eines Lagerstiftes 46 an einem Bauteil 41 gelagert. Der Stift 40 erstreckt sich durch ein Langloch 42 des Bauteils 41. Eine Feder 43 drückt die Stang, e 24 nach oben in Richtung Auslösehebel 21.

The rod 24 serves to actuate a switch 26 which has an actuating element 25. With the switch 26, the electric motor, not shown, is switched on and off.

Die Stange 24 dient zur Betätigung eines Schalters 26, der ein Betätigungselement 25 aufweist. Mit dem Schalter 26 wird der nicht gezeigte Elektromotor ein-und ausgeschaltet.

The rod 24 also has a rectangular recess 45. A wedge-shaped locking element 47 is slidably guided in a guide 46. It is pressed outwards by a spring 48 in the direction of the rod 24. On the side opposite the guide 46, a spring 27 is provided which biases the rod 24 in the direction of the guide 46 or in the direction of the drive wheel 17.

Die Stange 24 weist ausserdem eine rechteckige Ausnehmung 45 auf. In einer Führung 46 ist ein keilförmiges Verriegelungselement 47 gleitend verschiebbar geführt. Es wird von einer Feder 48 nach aussen in Richtung der Stange 24 gedrückt. Auf der der Führung 46 gegenüberliegenden Seite ist eine Feder 27 vorgesehen, welche die Stange 24 in Richtung Führung 46 bzw. in Richtung Antriebsrad 17 vorspannt.

<Desc / Clms Page number 10>

<Desc/Clms Page number 10>

The shown arrangement works as follows.

Die gezeigte Anordnung arbeitet wiz folgt.

The rest position is shown in FIG. The trigger 21 is in the starting position and the rod 24 in the raised position is in weak contact with the nose 21a of the trigger 21 or briefly below. The spring-

HKU0002258
RX-0155.10
Koki Holdings America Ltd.
Ex. 1002, p. 48

loaded actuating element 25 of the switch is in the off position since the lower end of the rod 10 is at a distance from it. The rod 24 is held against the open end of the guide 46 by the spring 27. The spring 27 is evidently stronger than the spring 48. Now, as shown in FIG.

Die Ruheposition gibt Fig. 1 wieder. Der Auslöser 21 befindet sich in der Ausgangsstellung und die Stange 24 in der angehobenen Stellung in schwacher Anlage an der Nase 21a des Auslösers 21 oder kurz darunter. Das federbelastetete Betätigungselement 25 des Schalters ist in der Aus-Stellung, da das untere Ende der Stange 10 einen Abstand von ihm hat. Die Stange 24 wird durch die Feder 27 gegen das offene Ende der Führung 46 gehalten. Die Feder 27 ist ersichtlich stärker als die Feder 48. Wird nun wie in Fig.

2

, the trigger 21 is pushed down by thumb pressure, the rod 24 is also pressed downwards and actuates the actuating element 25 of the switch 26. The motor is turned on, and the driving gear 27 starts to rotate. The teeth of the toothed segment 29 cooperate with the toothed rack 11 and raise these upwards against the spring pressure up to an upper dead center position which is reached in FIG. In the actuated state, the recess 45 is aligned with the locking element 47 so that the locking element enters the recess and locks the rod in this position, as shown in FIG. Releasing the trigger 21, as can be seen in FIG. 3, does not cause the motor to be switched off.

---

gezeigt, der Auslöser 21 durch Daumendruck heruntergedrückt, wird auch die Stange 24 nach unten gedrückt und betätigt das Betätigungselement 25 des Schalters 26. Der Motor ist eingeschaltet, und das Antriebsrad 27 beginnt zu drehen. Die Zähne des Zahnsegments 29 wirken mit der Zahnstange 11 zusammen und heben diese gegen den Federdruck nach oben an bis in eine obere Totpunktstellung, die in Fig. 4 erreicht ist. Im Betätigungszustand ist die Ausnehmung 45 mit dem Verriegelungselement 47 ausgerichtet, so dass das Verriegelungselement in die Ausnehmung eintritt und die Stange in dieser Lage verriegelt, wie in Fig. 3 dargestellt. Ein Loslassen des Auslösers 21, wie in Fig. 3 zu erkennen, führt nicht zu einem Ausschalten des Motors.

<Desc / Clms Page number 11>

<Desc/Clms Page number 11>

At the moment when the toothed segment 19 leaves the toothing 12 of the toothed rack 11, the drive-in spring 15 pushes down the rack 11 and thus the driving tappet 10 so that a drive-in stop is performed. Since the drive motor continues to rotate the drive wheel 17, the cam 20 engages laterally against the rod 24 on the drive wheel 17, immediately after the separation of the toothed

HKU0002259
RX-0155.11
Koki Holdings America Ltd.
Ex. 1002, p. 49

rack 11 and the drive wheel 17. The bar 24 is pivoted clockwise.

In dem Augenblick, in dem das Zahnsegment 19 die Zahnung 12 der Zahnstange 11 verlässt, drückt die Eintreibfeder 15 die Zahnstange 11 und damit der Eintreibstössel 10 nach unten, so dass ein Eintreibschlag ausgeführt wird. Da der Antriebsmotor das Antriebsrad 17 weiter dreht, greift der Nocken 20 am Antriebsrad 17 seitlich an die Stange 24 an, unmittelbar nach dem Trennen von Zahnstange 11 und Antriebsrad 17. Die Stange 24 wird in Uhrzeigerrichtung verschwenkt.

It thus slides from the actuating element 25, so that this can return to its exhibition. In addition, the rod 24 is thereby unlocked and can return to the initial position according to FIG. 1 by means of the spring 43.

Sie rutscht dadurch vom Betätigungselement 25, so dass dieses in seine Ausstellung zurückkehren kann. Ausserdem wird die Stange 24 dadurch entriegelt und kann mit Hilfe der Feder 43 in die Ausgangsstellung nach Fig. 1 zurückkehren.

It will be understood that the wedge-shaped locking element 47 is only partly projecting out of the guide 46 and is prevented by a corresponding stop from falling completely out.

Es versteht sich, dass das keilförmige Verriegelungselement 47 nur teilweise aus der Führung 46 heraussteht und durch einen entsprechenden Anschlag gehindert ist, vollständig herauszufallen.

HKU0002260
RX-0155.12
Koki Holdings America Ltd.
Ex. 1002, p. 50

PATENT COOPERATION TREATY

PCT

INTERNATIONAL SEARCH REPORT

(PCT Article 18 and Rules 43 and 44)

Applicant's or agent's file reference SEN0522.PCT	FOR FURTHER ACTION	see Form PCT/ISA/220 as well as, where applicable, item 5 below.
International application No. PCT/US2008/078408	International filing date *(day/month/year)* 01 October 2008	(Earliest) Priority Date *(day/month/year)* 05 October 2007
Applicant SENCO PRODUCTS, INC.		

This international search report has been prepared by this International Searching Authority and is transmitted to the applicant according to Article 18. A copy is being transmitted to the International Bureau.

This international search report consists of a total of 2 sheets.

☐ It is also accompanied by a copy of each prior art document cited in this report.

1. **Basis of the report**
   a. With regard to the **language**, the international search was carried out on the basis of:
      ☒ the international application in the language in which it was filed
      ☐ a translation of the international application into _____ , which is the language of a translation furnished for the purposes of international search (Rules 12.3(a) and 23.1(b))
   b. ☐ With regard to any **nucleotide and/or amino acid sequence** disclosed in the international application, see Box No. I.
2. ☐ **Certain claims were found unsearchable** (see Box No. II)
3. ☐ **Unity of invention is lacking** (see Box No. III)
4. With regard to the **title**,
   ☒ the text is approved as submitted by the applicant
   ☐ the text has been established by this Authority to read as follows:
5. With regard to the **abstract**,
   ☒ the text is approved as submitted by the applicant
   ☐ the text has been established, according to Rule 38.2(b), by this Authority as it appears in Box No. IV. The applicant may, within one month from the date of mailing of this international search report, submit comments to this Authority
6. With regard to the **drawings**,
   a. the figure of the **drawings** to be published with the abstract is Figure No. 21
      ☒ as suggested by the applicant
      ☐ as selected by this Authority, because the applicant failed to suggest a figure
      ☐ as selected by this Authority, because this figure better characterizes the invention
   b. ☐ none of the figures is to be published with the abstract

PATENT COOPERATION TREATY

From the INTERNATIONAL SEARCHING AUTHORITY

To: FREDERICK GRIBBELL
TAYLOR & AUST, P.C.
10250 ALLIANCE ROAD, SUITE 120
CINCINNATI, OH 45242

PCT

NOTIFICATION OF TRANSMITTAL OF THE INTERNATIONAL SEARCH REPORT AND THE WRITTEN OPINION OF THE INTERNATIONAL SEARCHING AUTHORITY, OR THE DECLARATION

(PCT Rule 44.1)

	Date of mailing *(day/month/year)* 08 DEC 2008
Applicant's or agent's file reference SEN0522.PCT	**FOR FURTHER ACTION** See paragraphs 1 and 4 below
International application No. PCT/US2008/078408	International filing date *(day/month/year)* 01 October 2008
Applicant SENCO PRODUCTS, INC.	

1. ☒ The applicant is hereby notified that the international search report and the written opinion of the International Searching Authority have been established and are transmitted herewith.

   Filing of amendments and statement under Article 19:
   The applicant is entitled, if he so wishes, to amend the claims of the international application (see Rule 46):

   When? The time limit for filing such amendments is normally two months from the date of transmittal of the international search report.

   Where? Directly to the International Bureau of WIPO, 34 chemin des Colombettes 1211 Geneva 20, Switzerland, Facsimile No.: +41 22 740 14 35

   For more detailed instructions, see the notes on the accompanying sheet.

2. ☐ The applicant is hereby notified that no international search report will be established and that the declaration under Article 17(2)(a) to that effect and the written opinion of the International Searching Authority are transmitted herewith.

3. ☐ **With regard to the protest** against payment of (an) additional fee(s) under Rule 40.2, the applicant is notified that:

   ☐ the protest together with the decision thereon has been transmitted to the International Bureau together with the applicant's request to forward the texts of both the protest and the decision thereon to the designated Offices.

   ☐ no decision has been made yet on the protest; the applicant will be notified as soon as a decision is made.

4. **Reminders**

   Shortly after the expiration of **18 months** from the priority date, the international application will be published by the International Bureau. If the applicant wishes to avoid or postpone publication, a notice of withdrawal of the international application, or of the priority claim, must reach the International Bureau as provided in Rules 90*bis*.1 and 90*bis*.3, respectively, before the completion of the technical preparations for international publication.

   The applicant may submit comments on an informal basis on the written opinion of the International Searching Authority to the International Bureau. The International Bureau will send a copy of such comments to all designated Offices unless an international preliminary examination report has been or is to be established. These comments would also be made available to the public but not before the expiration of 30 months from the priority date.

   Within **19 months** from the priority date, but only in respect of some designated Offices, a demand for international preliminary examination must be filed if the applicant wishes to postpone the entry into the national phase **until 30 months** from the priority date (in some Offices even later); otherwise, the applicant must, **within 20 months** from the priority date, perform the prescribed acts for entry into the national phase before those designated Offices.

   In respect of other designated Offices, the time limit of **30 months** (or later) will apply even if no demand is filed within 19 months.

   See the Annex to Form PCT/IB/301 and, for details about the applicable time limits, Office by Office, see the *PCT Applicant's Guide*, Volume II, National Chapters and the WIPO Internet site.

Name and mailing address of the ISA/US Mail Stop PCT, Attn: ISA/US Commissioner for Patents P.O. Box 1450, Alexandria, Virginia 22313-1450 Facsimile No. 571-273-3201	Authorized officer: Blaine R. Copenheaver Telephone No. 571-272-7774

INTERNATIONAL SEARCH REPORT

International application No.
PCT/US2008/078408

A. CLASSIFICATION OF SUBJECT MATTER
IPC(8) - B25C 5/13 (2008.04)
USPC - 227/130
According to International Patent Classification (IPC) or to both national classification and IPC

B. FIELDS SEARCHED

Minimum documentation searched (classification system followed by classification symbols)
IPC(8) - B25C 1/04, 1/06, 1/08, 5/00, 5/13 (2008.04)
USPC - 173/2, 117, 122, 217; 227/10, 120, 130, 138

Documentation searched other than minimum documentation to the extent that such documents are included in the fields searched

Electronic data base consulted during the international search (name of data base and, where practicable, search terms used)
PatBase, Google Patents

C. DOCUMENTS CONSIDERED TO BE RELEVANT

Category*	Citation of document, with indication, where appropriate, of the relevant passages	Relevant to claim No.
X	US 7,040,521 B2 (KOLODZIEJ et al) 09 May 2006 (09.05.2006) entire document	1-3
X	US 2003/0218042 A1 (ODONI et al) 27 November 2003 (27.11.2003) entire document	24-30
A	JP 2007/044799 A2 (MURAYAMA et al) 22 February 2007 (22.02.2007) entire document	1-34
A	WO 2007/043260 A1 (ISHIDA et al) 19 April 2007 (19.04.2007) entire document	1-34
A	US 2002/0104869 A1 (GARVIS et al) 08 August 2002 (08.08.2002) entire document	1-34
A	US 2002/0158102 A1 (PATTON et al) 31 October 2002 (31.10.2002) entire document	1-34
A	US 6,971,567 B1 (CANNALIATO et al) 06 December 2005 (06.12.2005) entire document	1-34
A	US 7,225,961 B1 (LEE) 05 June 2007 (05.06.2007) entire document	1-34

☐ Further documents are listed in the continuation of Box C. ☐

* Special categories of cited documents:
"A" document defining the general state of the art which is not considered to be of particular relevance
"E" earlier application or patent but published on or after the international filing date
"L" document which may throw doubts on priority claim(s) or which is cited to establish the publication date of another citation or other special reason (as specified)
"O" document referring to an oral disclosure, use, exhibition or other means
"P" document published prior to the international filing date but later than the priority date claimed
"T" later document published after the international filing date or priority date and not in conflict with the application but cited to understand the principle or theory underlying the invention
"X" document of particular relevance; the claimed invention cannot be considered novel or cannot be considered to involve an inventive step when the document is taken alone
"Y" document of particular relevance; the claimed invention cannot be considered to involve an inventive step when the document is combined with one or more other such documents, such combination being obvious to a person skilled in the art
"&" document member of the same patent family

Date of the actual completion of the international search
24 November 2008

Date of mailing of the international search report
08 DEC 2008

Name and mailing address of the ISA/US
Mail Stop PCT, Attn: ISA/US, Commissioner for Patents
P.O. Box 1450, Alexandria, Virginia 22313-1450
Facsimile No. 571-273-3201

Authorized officer:
Blaine R. Copenheaver
PCT Helpdesk: 571-272-4300
PCT OSP: 571-272-7774

Form PCT/ISA/210 (second sheet) (April 2005)

PATENT COOPERATION TREATY

From the
INTERNATIONAL SEARCHING AUTHORITY

To: FREDERICK GRIBBELL
TAYLOR & AUST, P.C.
10250 ALLIANCE ROAD, SUITE 120
CINCINNATI, OH 45242

PCT

WRITTEN OPINION OF THE
INTERNATIONAL SEARCHING AUTHORITY

(PCT Rule 43*bis*.1)

Date of mailing *(day/month/year)* 08 DEC 2008	
Applicant's or agent's file reference SEN0522.PCT	**FOR FURTHER ACTION** See paragraph 2 below

International application No.	International filing date *(day/month/year)*	Priority date *(day/month/year)*
PCT/US2008/078408	01 October 2008	05 October 2007

International Patent Classification (IPC) or both national classification and IPC
IPC(8) - B25C 5/13 (2008.04)
USPC - 227/130

Applicant SENCO PRODUCTS, INC.

1. This opinion contains indications relating to the following items:

- [X] Box No. I Basis of the opinion
- [ ] Box No. II Priority
- [ ] Box No. III Non-establishment of opinion with regard to novelty, inventive step and industrial applicability
- [ ] Box No. IV Lack of unity of invention
- [X] Box No. V Reasoned statement under Rule 43*bis*.1(a)(i) with regard to novelty, inventive step or industrial applicability; citations and explanations supporting such statement
- [ ] Box No. VI Certain documents cited
- [ ] Box No. VII Certain defects in the international application
- [ ] Box No. VIII Certain observations on the international application

2. **FURTHER ACTION**

If a demand for international preliminary examination is made, this opinion will be considered to be a written opinion of the International Preliminary Examining Authority ("IPEA") except that this does not apply where the applicant chooses an Authority other than this one to be the IPEA and the chosen IPEA has notified the International Bureau under Rule 66.1*bis*(b) that written opinions of this International Searching Authority will not be so considered.

If this opinion is, as provided above, considered to be a written opinion of the IPEA, the applicant is invited to submit to the IPEA a written reply together, where appropriate, with amendments, before the expiration of 3 months from the date of mailing of Form PCT/ISA/220 or before the expiration of 22 months from the priority date, whichever expires later.

For further options, see Form PCT/ISA/220.

3. For further details, see notes to Form PCT/ISA/220.

Name and mailing address of the ISA/US	Date of completion of this opinion	Authorized officer:
Mail Stop PCT, Attn: ISA/US Commissioner for Patents P.O. Box 1450, Alexandria, Virginia 22313-1450 Facsimile No. 571-273-3201	24 November 2008	Blaine Copenheaver PCT Helpdesk: 571-272-4300 PCT OSP: 571-272-7774

Form PCT/ISA/237 (cover sheet) (April 2007)

WRITTEN OPINION OF THE INTERNATIONAL SEARCHING AUTHORITY

International application No.
PCT/US2008/078408

Box No. I Basis of this opinion

1. With regard to the **language**, this opinion has been established on the basis of:
   - [X] the international application in the language in which it was filed.
   - [ ] a translation of the international application into _____ which is the language of a translation furnished for the purposes of international search (Rules 12.3(a) and 23.1(b)).

2. [ ] This opinion has been established taking into account the **rectification of an obvious mistake** authorized by or notified to this Authority under Rule 91 (Rule 43*bis*.1(a))

3. With regard to any **nucleotide and/or amino acid sequence** disclosed in the international application, this opinion has been established on the basis of:

   a. type of material
   - [ ] a sequence listing
   - [ ] table(s) related to the sequence listing

   b. format of material
   - [ ] on paper
   - [ ] in electronic form

   c. time of filing/furnishing
   - [ ] contained in the international application as filed
   - [ ] filed together with the international application in electronic form
   - [ ] furnished subsequently to this Authority for the purposes of search

4. [ ] In addition, in the case that more than one version or copy of a sequence listing and/or table(s) relating thereto has been filed or furnished, the required statements that the information in the subsequent or additional copies is identical to that in the application as filed or does not go beyond the application as filed, as appropriate, were furnished.

5. Additional comments:

WRITTEN OPINION OF THE INTERNATIONAL SEARCHING AUTHORITY

International application No.
PCT/US2008/078408

Box No. V **Reasoned statement under Rule 43*bis*.1(a)(i) with regard to novelty, inventive step or industrial applicability; citations and explanations supporting such statement**

1. Statement

Novelty (N)	Claims	4-23, 31-34	YES
	Claims	1-3, 24-30	NO
Inventive step (IS)	Claims	4-23, 31-34	YES
	Claims	1-3, 24-30	NO
Industrial applicability (IA)	Claims	1-34	YES
	Claims	None	NO

2. Citations and explanations:

Claims 1-3 lack novelty under PCT Article 33(2) as being anticipated by Kolodziej et al.

Regarding Claim 1, Kolodziej et al. disclose a driving mechanism adapted for use in a fastener driving tool (10), said driving mechanism comprising: (a) a hollow cylinder (12) comprising a cylindrical wall (14) and having a movable piston (34) there-within, said hollow cylinder having a first end (16) and a second opposite end (20), said hollow cylinder containing a displacement volume (40) created by a stroke of said piston; and (b) a guide body (22) that is substantially adjacent to the second end of said cylinder, said guide body having a receiving end, an exit end (24), and a passageway (28) there-between, said receiving end being proximal to said second end of the cylinder, said guide body being configured to receive a fastener that is to be driven from said exit end (col. 3, lines 38-42); characterized in that: (c) a driver member (30) is in mechanical communication with said piston at a third end (32) of said driver member, said driver member having a fourth, opposite end (36) that is sized and shaped to push said fastener from said exit end of the guide body (col. 3, lines 38-42), wherein said passageway of the guide body allows said driver member to pass there-through toward said exit end during a driving stroke and toward said receiving end during a return stroke (col. 3, lines 45-55), said driver member, when at a driven position (solid demarcation of Fig. 1), protruding toward said exit end of the guide body after said piston moves toward the second end of said cylinder, and said driver member, when at a ready position (phantom demarcation of Fig. 1), being withdrawn into said guide body after said piston moves toward the first end of said cylinder; (d) a main storage chamber (44) substantially surrounds at least a portion of said cylinder and is in fluidic communication with said displacement volume of the cylinder (Fig. 1), wherein said main storage chamber and said displacement volume are initially charged with a pressurized gas (col. 4, lines 19-22); and (e) a lifter member (56) that, under first predetermined conditions, moves said driver member from its driven position toward its ready position (first position; col. 4, lines 10-12); wherein said cylinder and piston act as a gas spring, under second predetermined conditions, to move said driver member from its ready position toward its driven position (second position; col. 4, lines 14-16), using said pressurized gas of both said main storage chamber and said displacement volume acting on said piston, while said driver member's fourth end contacts said fastener and moves the fastener from said exit end of said guide body (col. 4, lines 14-18).

Regarding Claim 2, Kolodziej et al. disclose wherein: (c) said main storage chamber (44) is substantially cylindrical in shape, and is substantially co-axial with said cylinder (Fig. 1; col. 3, lines 52-54).

Regarding Claim 3, Kolodziej et al. further comprising: (d) a fastener magazine (not shown; col. 4, lines 1-2) for holding a plurality of fasteners, and for serially supplying said plurality of fasteners through an opening (28) of the guide body to a position that is coincident with the path of said driver member during said driving stroke (col. 4, lines 1-18).

Claims 24-30 lack novelty under PCT Article 33(2) as being anticipated by Odoni et al.

Regarding Claim 24, Odoni et al. discloses a method for controlling a fastener driving tool (10), said method comprising: (a) providing a fastener driving tool (10) that includes: (i) a housing (29), (ii) a system controller (20), (iii) a fastener driving mechanism that moves a driver member (18) toward an exit end (distal end of 18) of the mechanism, (iv) a safety contact element (22), (v) a user-actuated trigger (25), and (vi) a fastener (stored in magazine 19); characterized in that: (b) said fastener driving tool further comprises: (vii) a prime mover (12) that moves a lifter member (16) which moves said driver member away from said exit end of the mechanism, and (viii) a latch control device (14) that moves a latch member (15) which has a catching surface (distal end of elongated switch rod; Fig. 1); (c) initiating a driving cycle by pressing said exit end against a workpiece and actuating said trigger (para. [0035]), thereby: (i) causing said latch control device to activate, which moves said catching surface of the latch member to a position that does not interfere with movements of said driver member (paras. [0036] and [0037]); and (ii) causing said fastener driving mechanism to force the driver member to move toward said exit end and drive said fastener into said workpiece (para. [0028]); (d) actuating said prime mover (para. [0029]), thereby moving said lifter member and causing said driver member to move away from said exit end toward a ready position (para. [0038], lines 13-16); and (e) then de-activating said latch control device (para. [0039]), which allows a mechanical biasing (via valve 24) of said latch member to move the catching surface of the latch member to a position that interferes with movements of said driver member (paras.[0038]).

Regarding Claim 25, Odoni et al. further comprising the steps of: (a) withdrawing said exit end from making contact against said workpiece, thereby allowing said tool to begin a new driving cycle (para. [0038]).

Regarding Claim 26, Odoni et al. disclose wherein: (b) said tool includes a driver actuation device (11, 12, 24) which forces said driver element (18) toward said exit end, wherein said driver actuation device comprises one of: (i) a mechanical spring; (ii) a gas spring; (iii) a compressed gas valve (24; para. [0029]); (iv) a pressurized liquid valve; (v) a motor; and (vi) compressed foam.

(Continued in Supplemental Box)

WRITTEN OPINION OF THE INTERNATIONAL SEARCHING AUTHORITY

International application No.
PCT/US2008/078408

Supplemental Box

In case **the space in any of the preceding boxes is not sufficient.**
Continuation of:
Box V

Regarding Claim 27, Odoni et al. disclose a method for controlling a fastener driving tool (10), said method comprising: (a) providing a fastener driving tool (10) that includes: (i) a housing (29), (ii) a system controller (20), (iii) a safety contact element (distal end of elongated switch rod 15), (iv) a user-actuated trigger (25), and (v) a fastener (stored in magazine 19); characterized in that: (b) said fastener driving tool further comprises: (vi) a prime mover (12) that moves a lifter member (14) which moves a driver member (18) away from an exit end (distal end of 18; Fig. 1) of the mechanism; and (vii) a fastener driving mechanism that moves said driver member toward said exit end of the mechanism, said fastener driving mechanism including: (A) a hollow cylinder (17) comprising a cylindrical wall with a movable piston (16) there-within, said hollow cylinder containing a displacement volume (volume defined by piston16 reciprocating in cylinder 17) created by a stroke of said piston, and (B) a main storage chamber (13) that is in fluidic communication with said displacement volume of the cylinder, wherein said main storage chamber and said displacement volume are initially charged with a pressurized gas (para. [0029]); (c) selecting, by a user, an operating mode of said driving cycle to be a "restrictive firing mode" (15); wherein: (i) if said restrictive firing mode is selected, said tool will operate if said safety contact element has been actuated before said trigger actuator has been operated (para. [0035]); (d) initiating a driving cycle by pressing said exit end against a workpiece and actuating said trigger (para. [0038]), thereby causing said fastener driving mechanism to force the driver member to move toward said exit end and drive a fastener into said workpiece (para. [0028]); and (e) actuating said prime mover (12), thereby moving said lifter member and causing said driver member to move away from said exit end toward a ready position (para. [0038], lines 13-16).

Regarding Claim 28, Odoni et al. further comprising the steps of: (a) withdrawing said exit end from making contact against said workpiece, thereby allowing said tool to begin a new driving cycle (para. [0038]).

Regarding Claim 29, Odoni et al. disclose wherein: (b) said tool includes a fastener magazine (19) that contains a plurality of fasteners (not shown); (i) and further comprising the step of: (ii) serially supplying said plurality of fasteners to a position that is coincident with the path of said driver member during a driving stroke (Fig. 1, para. [0028]).

Regarding Claim 30, Odoni et al. further comprising the steps of: (b) de-activating said prime mover and said latch control device after a predetermined time interval has occurred after a beginning of a driving stroke, even if said trigger is still actuated and said exit end of the tool is still pressed against a workpiece, thereby placing said tool into a ready condition for a next particular driving cycle while saving energy (para. [0037]).

Claims 4-23 and 31-34 meet the criteria set out in PCT Article 33(2)-(3), because the prior art does not teach or fairly suggest .

[Claim 4] A driving mechanism adapted for use in a fastener driving tool, said driving mechanism comprising: (a) a hollow cylinder comprising a cylindrical wall and having a movable piston there-within, said hollow cylinder having a first end and a second, opposite end, said hollow cylinder containing a displacement volume created by a stroke of said piston; (b) a main storage chamber that is n fluidic communication with said displacement volume of the cylinder, wherein said main storage chamber and said displacement volume are initially charged with a pressurized gas; and (c) a guide body that is substantially adjacent to the second end of said cylinder, said guide body having a receiving end, an exit end, and a passageway there-between, said receiving end being proximal to said second end of the cylinder, said guide body being configured to receive a fastener that is to be driven from said exit end; characterized in that: (d) an elongated driver member is in mechanical communication with said piston at a third end of said driver member: (i) said driver member having a fourth, opposite end that is sized and shaped to push a fastener from said exit end of the guide body, wherein said passageway of the guide body allows said driver member to pass there-through toward said exit end during a driving stroke and toward said receiving end during a return stroke, said driver member, when at a driven position, protruding toward said exit end of the guide body after said piston moves toward the second end of said cylinder, and said driver member, when at a ready position, being withdrawn into said guide body after said piston moves toward the first end of said cylinder, (ii) said driver member having at least one longitudinal edge that is substantially parallel to a direction of movement of said driver member between its driven and ready positions, (iii) said driver member having at least one plurality of spaced-apart protrusions along said at least one longitudinal edge; (e) a lifter member exhibits a discontinuous contact surface that, at predetermined locations along said discontinuous contact surface, makes contact with said at least one plurality of spaced-apart protrusions of said driver member such that, under first predetermined conditions, said lifter member is moved in a first direction and thereby causes said driver member to be moved in a second direction from its driven position toward its ready position; and (f) a latch member has a catching surface and a sliding surface, wherein: (i) under third predetermined conditions, said latch member is controlled by a separate device and is forced into a non-catching position such that its catching surface does not interfere with said at least one plurality of spaced-apart protrusions of said driver member, thereby allowing said driver member to move in a third direction from its ready position to its driven position; and (ii) under fourth predetermined conditions, during which said driver member is being moved in said second direction from its driven position to its ready position, said separate device releases said latch member so that the latch member is not forced into a non-catching position, said latch member is directed toward a catching position, however, said sliding surface of the latch member allows said at least one plurality of spaced-apart protrusions of the driver member to slide along the latch member without being stopped so long as the driver member remains moving in the second direction; wherein said cylinder and piston act as a gas spring, under second predetermined conditions, to move said driver member from its ready position toward its driven position, using said pressurized gas of both said main storage chamber and said displacement volume acting on said piston, while said driver member's fourth end contacts said fastener and moves the fastener from said exit end of said guide body; or

(Continued in Next Supplemental Box)

WRITTEN OPINION OF THE INTERNATIONAL SEARCHING AUTHORITY

International application No.
PCT/US2008/078408

Supplemental Box

In case **the space in any of the preceding boxes is not sufficient.**
Continuation of:

Previous Supplemental Box

[Claim 7] a driving mechanism adapted for use in a fastener driving tool, said driving mechanism comprising: (a) a hollow cylinder comprising a cylindrical wall and having a movable piston there-within, said hollow cylinder having a first end and a second, opposite end, said hollow cylinder containing a displacement volume created by a stroke of said piston; (b) a main storage chamber that is in fluidic communication with said displacement volume of the cylinder, wherein said main storage chamber and said displacement volume are initially charged with a pressurized gas; and (c) a guide body that is substantially adjacent to the second end of said cylinder, said guide body having a receiving end, an exit end, and a passageway there-between, said receiving end being proximal to said second end of the cylinder, said guide body having an opening for receiving a fastener that is to be driven from said exit end; characterized in that: (d) an elongated driver member is in mechanical communication with said piston at a third end of said driver member: (i) said driver member having a fourth, opposite end that is sized and shaped to push a fastener into an external workpiece, wherein said passageway of the guide body allows said driver member to pass there-through toward said exit end during a driving stroke and toward said receiving end during a return stroke, said driver member, when at a driven position, protruding toward said exit end of the guide body after said piston moves toward the second end of said cylinder, and said driver member, when at a ready position, being withdrawn into said guide body after said piston moves toward the first end of said cylinder; (ii) said driver member having a first longitudinal edge, (iii) said driver member having a first plurality of spaced-apart protrusions along said first longitudinal edge; and (e) a lifter member exhibits an outer shape, in which its outer shape defines a perimeter of a surface: (i) said lifter member being rotated, under first predetermined conditions, by a drive member that is in mechanical communication with said lifter member, (ii) said lifter member having a plurality of extensions that protrude from said surface, and under said first predetermined conditions, said plurality of extensions are brought into mechanical contact with said first plurality of spaced-apart protrusions along said first longitudinal edge of the driver member during said return stroke, and thereby moves said driver member from its driven position toward its ready position, and (iii) said lifter member being positionable, under second predetermined conditions such that a portion of the perimeter of said lifter member and said plurality of extensions is not proximal to said first plurality of spaced-apart protrusions of the driver member, and thereby prevents said plurality of extensions of the lifter member from mechanically interfering with said first plurality of spaced-apart protrusions of the driver member during said driving stroke in which said driver member is moved from its ready position toward its driven position; or

[Claim 12] a driving mechanism adapted for use in a fastener driving tool, said driving mechanism comprising: (a) a guide body that has a receiving end, an exit end, and a passageway there-between, said guide body being configured to receive a fastener that is to be driven from said exit end; (b) a driver actuation device, that has a first end and a second end, said second end being movable; characterized in that: (c) an elongated driver member is in mechanical communication with said second end of the driver actuation device at a third end of said driver member: (i) said driver member having a fourth, opposite end that is sized and shaped to push a fastener from said exit end of the guide body, wherein said passageway of the guide body allows said driver member to pass therethrough toward said exit end during a driving stroke and toward said receiving end during a return stroke, said driver member, when at a driven position, protruding toward said exit end of the guide body, and said driver member, when at a ready position, being withdrawn into said guide body, (ii) said driver member having at least one longitudinal edge and having a direction of movement between its driven and ready positions, (iii) said driver member having at least one plurality of spaced-apart protrusions along said at least one longitudinal edge; and (d) a lifter member exhibits a discontinuous contact surface that, at predetermined locations along said discontinuous contact surface, makes contact with said at least one plurality of spaced apart protrusions of said driver member such that said lifter member is moved in a first direction and thereby causes said driver member to be moved from its driven position toward its ready position; wherein: (e) said lifter member, under first predetermined conditions, forces said driver member to undergo a return stroke and move toward said ready position; and (f) said driver actuation device, under second predetermined conditions, forces said driver member to undergo a driving stroke and move toward said driven position; or

[Claim 16] a driving mechanism adapted for use in a fastener driving tool, said driving mechanism comprising: (a) a hollow cylinder comprising a cylindrical wall and having a movable piston there-within, said hollow cylinder having a first end and a second, opposite end, said hollow cylinder containing a displacement volume created by a stroke of said piston; (b) a guide body that is substantially adjacent to the second end of said cylinder, said guide body having a receiving end, an exit end, and a passageway there-between, said receiving end being proximal to said second end of the cylinder, said guide body being configured to receive a fastener that is to be driven from said exit end; characterized in that: (c) an elongated driver member is in mechanical communication with said piston at a third end of said driver member: (i) said driver member having a fourth, opposite end that is sized and shaped to push a fastener into an external workpiece, wherein said passageway of the guide body allows said driver member to pass there-through toward said exit end during a driving stroke and toward said receiving end during a return stroke, said driver member, when at a driven position, protruding toward said exit end of the guide body after said piston moves toward the second end of said cylinder, and said driver member, when at a ready position, being withdrawn into said guide body after said piston moves toward the first end of said cylinder; (ii) said driver member having a first longitudinal edge and having a direction of movement between its driven and ready positions, (iii) said driver member having a first plurality of spaced-apart protrusions along said first longitudinal edge; (d) a lifter member that, under first predetermined conditions, moves said driver member from its driven position toward its ready position, wherein: (i) said lifter member is rotated, under first predetermined conditions, by a drive shaft that is in mechanical communication with said lifter member; (ii) said lifter member has a plurality of extensions that protrude from a surface of the lifter member, and under said first predetermined conditions, said plurality of extensions are brought into mechanical contact with at least one of said first plurality of spaced-apart protrusions along said first longitudinal edge of the driver member, and thereby, under said first predetermined conditions, moves said driver member from its driven position toward its ready position, and (iii) said lifter member is positionable, under second predetermined conditions such that said plurality of extensions of the lifter member are prevented from mechanically interfering with said first plurality of spaced-apart protrusions along said first longitudinal edge of the driver member during said driving stroke in which said driver member is moved from its ready position toward its driven position; and(e) a driver actuation device that, under second predetermined conditions, forces said driver member to undergo a driving stroke and move toward said driven position; or

(Continued in Next Supplemental Box)

WRITTEN OPINION OF THE INTERNATIONAL SEARCHING AUTHORITY

International application No.
PCT/US2008/078408

Supplemental Box

In case **the space in any of the preceding boxes is not sufficient.**
Continuation of:
Previous Supplemental Box

[Claim 20] a driving mechanism adapted for use in a fastener driving tool, said driving mechanism comprising: (a) a guide body that has a receiving end, an exit end, and a passageway there-between, said guide body being configured to receive a fastener that is to be driven from said exit end; (b) a driver actuation device that has a first end and a second end, said second end being movable; characterized in that: (c) an elongated driver member is in mechanical communication with said second end of the driver actuation device at a third end of said driver member: (i) said driver member having a fourth, opposite end that is sized and shaped to push a fastener from said exit end of the guide body, wherein said passageway of the guide body allows said driver member to pass there-through toward said exit end during a driving stroke and toward said receiving end during a return stroke, said driver member, when at a driven position, protruding toward said exit end of the guide body, and said driver member, when at a ready position, being withdrawn into said guide body, (ii) said driver member having at least one longitudinal edge and having a direction of movement between its driven and ready positions, (iii) said driver member having at least one plurality of spaced-apart protrusions along said at least one longitudinal edge; and (d) a lifter member that exhibits a discontinuous contact surface that, at predetermined locations along said discontinuous contact surface, makes contact with said at least one plurality of spaced-apart protrusions of said driver member such that said lifter member is moved in a first direction and thereby causes said driver member to be moved in a second direction from its driven position toward its ready position during said return stroke; and (e) a movable latch member that: (i) does not prevent a movement of said driver member when the driver member moves in said second direction; (ii) under normal circumstance, does not prevent a movement of said driver member when the driver member moves in a third direction from its ready position to its driven position during said driving stroke; and (iii) under abnormal circumstances, prevents a movement of said driver member when the driver member moves in said third direction; wherein: (f) said lifter member, under first predetermined conditions, forces said driver member to undergo a return stroke and move toward said ready position; and (g) said driver actuation device, under second predetermined conditions, forces said driver member to undergo a driving stroke and move toward said driven position; or

[Claim 31] a fastener driving tool, comprising: (a) a housing that contains a prime mover, and a system controller; (b) a safety contact element which is movable between an actuated position when said safety contact element is pressed against an external workpiece, and a non-actuated position when said safety contact element is not pressed against said external workpiece; (c) a trigger actuator that is user-actuated; (d) a trigger position sensor; and (e) a safety contact element position sensor; characterized in that: (f) a fastener driving mechanism, having: (i) a hollow cylinder having a movable piston there-within, said hollow cylinder having a first end and a second, opposite end, said hollow cylinder containing a displacement volume created by a stroke of said piston, said displacement volume being initially charged with a pressurized gas; (ii) a guide body that is substantially adjacent to the second end of said cylinder, said guide body having a receiving end, an exit end, and a passageway there-between, said receiving end being proximal to said second end of the cylinder, said guide body being configured to receive a fastener that is to be driven from said exit end; (iii) an elongated driver member that is in mechanical communication with said piston, said driver member having a driving surface that is sized and shaped to push a fastener into said external workpiece, wherein said passageway of the guide body allows said driver member to pass there-through toward said exit end during a driving stroke, and allows said driver member to pass there-through away from said exit end during a lifting interval; (A) said driver member having a first longitudinal edge; (B) said driver member having a first plurality of spaced-apart protrusions along said first longitudinal edge; and (iv) a lifter member that exhibits an outer shape that defines a perimeter of said lifter member's surface: (A) said lifter member being movable, under command of said system controller, by said prime mover; (B) said lifter member having a discontinuous contact surface that, at predetermined locations along said discontinuous contact surface, makes contact with said first plurality of spaced-apart protrusions of said driver member such that, under first predetermined conditions, said lifter member is moved in a first direction and thereby causes said driver member to be moved from its driven position toward its ready position; and (C) said lifter member being positionable by said prime mover, under second predetermined conditions, such that said discontinuous contact surface of the lifter member does not mechanically interfere with said first plurality of spaced-apart protrusions along said first longitudinal edge of the driver member during said driving stroke, in which said driver member moves from its ready position toward its driven position; wherein said cylinder and piston act as a gas spring, under said second predetermined conditions, to move said driver member from its ready position toward its driven position, using said pressurized gas acting on said piston, while said driver member's driving surface contacts a fastener and moves the fastener toward said exit end of said guide body.

Claims 5-6, 8-11, 13-15, 17-19, 21-23 and 31-34 depend from base Claims 4, 7, 12, 16, 20 and 31, respectively, and therefore also not taught or fairly suggested by the prior art.

Kolodziej et al. is considered the closest prior art reference. Kolodziej et al. do not disclose or suggest a driver member having at least one plurality of spaced-apart protrusions along at least one longitudinal edge; or a lifter member exhibiting a discontinuous contact surface that, at predetermined locations along the discontinuous contact surface, makes contact with the at least one plurality of spaced-apart protrusions of the driver member such that, under first predetermined conditions, the lifter member is moved in a first direction and thereby causes the driver member to be moved in a second direction from its driven position toward its ready position.
Odoni et al. nor the other references cited in this opinion disclose or suggest the specific structural detail and arrangement of a driver member and lifter member, each having contact elements affording the lifter member to be moved in a first direction and thereby causes the driver member to be moved in a second direction as set forth in the Claims above. Thus, none of the cited prior art references cure the deficiencies of Kolodziej et al.

Claims 1-34 meet the criteria set out in PCT Article 33(4), and thus meets industrial applicability because the subject matter Claimed can be made or used in industry.

(51) Int. Cl.: B 25 d

BUNDESREPUBLIK DEUTSCHLAND

DEUTSCHES PATENTAMT

(52) Deutsche Kl.: 87 a, 18 ~~87 b, 2/13~~

(10)
(11) # Offenlegungsschrift 1503 164

(21) Aktenzeichen: P 15 03 164.8 (G 41619)
(22) Anmeldetag: 25. September 1964
(43) Offenlegungstag: **19. März 1970**

Ausstellungspriorität: —

(30) Unionspriorität
(32) Datum: —
(33) Land: —
(31) Aktenzeichen: —

---

(54) Bezeichnung: Antriebsvorrichtung

(61) Zusatz zu: —
(62) Ausscheidung aus: —
(71) Anmelder: General Wire Overseas Corp., Saint Louis, Mo. (V. St. A.)

Vertreter: Licht, Dipl.-Ing. M.; Schmidt, Dr. R.; Hansmann, Dipl.-Wirtsch.-Ing. A.; Herrmann, Dipl.-Phys. S.; Patentanwälte, 8000 München und 7603 Oppenau

(72) Als Erfinder benannt: Haley, Emmett Leeland, Dallas, Tex. (V. St. A.)

Benachrichtigung gemäß Art. 7 § 1 Abs. 2 Nr. 1 d. Ges. v. 4. 9. 1967 (BGBl. I S. 960): 2. 1. 1969

DT 1503 164

© 3.70 009 812 346 21/80

Koki Holdings America Ltd.
Ex. 1002, p. 60

P A T E N T A N W Ä L T E

PATENTANWÄLTE LICHT, HANSMANN, HERRMANN
8 MÜNCHEN 2 · THERESIENSTRASSE 33

Dipl.-Ing. MARTIN LICHT
Dr. REINHOLD SCHMIDT
Dipl.-Wirtsch.-Ing. AXEL HANSMANN
Dipl.-Phys. SEBASTIAN HERRMANN

Dr. Expl.

München, den 25. September 1964

Ihr Zeichen

Unser Zeichen
-/HM

1503164

GENERAL WIRE OVERSEAS CORPORATION
Saint Louis / Missouri
407 North 8th Street
V. St. A.

Antriebsvorrichtung

Die Erfindung betrifft Antriebsvorrichtungen, insbesondere eine Antriebsvorrichtung unter Verwendung eines Druckmediums zur Betätigung von Handwerkzeugen.

Eine Aufgabe der Erfindung besteht darin, eine neue und verbesserte Antriebsvorrichtung unter Verwendung eines Druckmediums zur Betätigung von Handwerkzeugen vorzusehen.

Eine weitere Aufgabe der Erfindung ist die Bildung einer Antriebsvorrichtung jener Art zur Betätigung von Handwerkzeugen, welche einen Behälter für gespeicherte Energie und

009812/0346

Patentanwälte Dipl.-Ing. Martin Licht, Dipl.-Wirtsch.-Ing. Axel Hansmann Dipl.-Phys. Sebastian Herrmann
8 MÜNCHEN 2, THERESIENSTRASSE 33 · Telefon: 29 21 02 · Telegramm-Adresse: Lipatli / München
Bankverbindungen: Deutsche Bank AG, Filiale München, Dep.-Kasse Viktualienmarkt, Konto-Nr. 716 728
Bayer. Vereinsbank München, Zweigst. Oskar-von-Miller-Ring, Kto.-Nr. 882 495 · Postscheck-Konto: München Nr. 163397
Oppenauer Büro: PATENTANWALT DR. RHEINHOLD SCHMIDT

eine Einrichtung zur automatischen Freigabe der Energie enthält, welche ein gewünschtes Werkzeug betätigt.

Ein weiterer Gegenstand der Erfindung ist eine neue und verbesserte Antriebsvorrichtung, die einen Kraftspeicher aufweist, in dem ein zusammendrückbares Medium, wie z.B. Gas, unter Druck gehalten und verwendet wird, um ein nicht zusammendrückbares Treibmedium in Bewegung zu setzen, das seinerseits eine Treibeinrichtung betätigt, wie z.B. einen Treibkolben oder Hammer eines Werkzeuges.

Ein weiterer Gegenstand der Erfindung ist die Bildung einer neuen und verbesserten Arbeitsvorrichtung, die einen Kraftspeicher, in dem ein zusammendrückbares Medium unter Druck gehalten wird, einen Kraftspeicherkolben und einen Treibkolben aufweist, die beide gleichzeitig in eine zurückgezogene oder gespannte Lage durch das Einbringen eines nicht zusammendrückbaren Arbeitsmediums in einen Zylinder bewegbar sind, in welchem die Kolben hin- und herbewegbar sind, wobei das Arbeitsmedium auf ausgesetzte Flächen des Treibkolbens wirkt, um diesen mit dem Kraftspeicherkolben zu bewegen, bis er seine voll gespannte Lage erreicht, worauf die weitere Bewegung des Kraftspeicherkolbens zusätzliche Flächen des Treibkolbens dem Druck des Arbeitsmediums aussetzt, worauf das zusammendrückbare Medium, das mittels des Arbeitsmediums wirkt, dem Treibkolben eine Antriebsbewegung mitteilt.

Koki Holdings America Ltd.
Ex. 1002, p. 62

Ein weiterer Gegenstand der Erfindung ist die Bildung einer neuen und verbesserten Antriebsvorrichtung zur Betätigung von Handwerkzeugen, die einen Treibkolben aufweist, der durch das Eindringen eines nicht zusammendrückbaren Arbeitsmediums in einen Zylinder in seine voll gespannte oder zurückgezogene Lage bewegbar und durch die Fortsetzung des Eindringens des Arbeitsmediums in einen derartigen Zylinder für Arbeits- oder Antriebsbewegung in der entgegengesetzen Richtung zu seiner vollständig ausgefahrenen Lage automatisch freigebbar ist, wobei diese Arbeitsbewegung des Treibkolbens durch die Kraft eines zusammengedrückten Gases ausgeübt wird, das über einen Kraftspeicherkolben auf das Arbeitsmedium in einem derartigen Zylinder wirkt.

Ein weiterer Gegenstand der Erfindung ist die Bildung einer Arbeitsvorrichtung der beschriebenen Art, die lediglich dann voll betätigbar ist, wenn sie in bezug auf ein Werkstück oder einen zu bearbeitenden Bau in eine geeignete Lage gebracht ist, wobei die Einrichtung mit einer Stillsetzeinrichtung für die Pumpe versehen ist, bevor der Treibkolben seine voll gespannte Lage erreicht, falls die Arbeitsvorrichtung in keine günstige Arbeitslage gebracht ist.

Ein weiterer Gegenstand der Erfindung ist eine Arbeitsvorrichtung der beschriebenen Art, bei der der Treibkolben und der Körper zusammenwirkende Einrichtungen zur Verlangsa-

BAD ORIGINAL

Koki Holdings ~~America Ltd.~~
Ex. 1002, p. 63

mung oder Begrenzung der Bewegung des Treibkolbens aufweisen, wenn dieser seine vollkommen ausgefahrene Lage erreicht, um die Stöße auf den Körper zu vermindern.

Weitere Merkmale und Vorteile der Erfindung werden im folgenden an Hand von Ausführungsbeispielen der Erfindung und unter Bezugnahme auf die Zeichnung beschrieben.

Fig.1 zeigt eine teilweise im Schnitt dargestellte Ansicht einer Antriebsvorrichtung nach der Erfindung, wobei der Treibkolben und der Kraftspeicherkolben in ihren ursprünglichen Lagen, vor dem Beginn der Betätigung der Arbeitsvorrichtung, dargestellt sind;

Fig.2 zeigt das Schaltschema des elektrischen Steuerkreises der Antriebsvorrichtung;

Fig.3 einen Teilschnitt, der den Treibkolben und den Speicherkolben in ihren extrem zurückgezogenen oder gespannten Stellungen zeigt;

Fig.4 einen ähnlichen Schnitt wie Fig.3, bei der jedoch Treibkolben und Speicherkolben nahe dem Ende des Antriebshubes des Treibkolbens dargestellt sind;

Koki Holdings America Ltd.
Ex. 1002, p. 64

Fig. 5 eine schematische Darstellung einer anderen Ausführungsform einer erfindungsgemäßen Arbeitsvorrichtung und

Fig. 6 einen Teilschnitt einer abgeänderten Ausführung des Treibkolbens.

Bei der Ausführungsform nach den Figuren 1 bis 4 der Zeichnung weist die Arbeitsvorrichtung 10 einen Körper 11 auf, der einen unteren pistolengriffartigen hohlen Handgriff 12 aufweist, dessen offene Seite durch eine nicht dargestellte Seitenplatte geschlossen sein kann, die mittels Bolzen oder Schrauben 13 befestigt ist. Der Körper 11 ist mit einer Hauptbohrung 14 versehen, die sich im wesentlichen senkrecht zum Handgriff 12 erstreckt und einen inneren ringförmigen Flansch 15 aufweist, der mit einer inneren ringförmigen Nut versehen ist, in der ein Dichtungsring (O-Ring) 16 oder ein anderes Dichtungsmittel angeordnet ist, das die Abdichtung zwischen dem Körper und einem Treibkolben 18 bewirkt. Der vordere Teil des Treibkolbens 18 ist mit einer Gewindebohrung versehen, in welche der verengte Teil 19 eines ringförmigen Hammerkopfes 20 erstreckt ist. Der vordere Teil des Treibkolbens 18 ist durch ein Führungsrohr 22 erstreckt, dessen rückwärtiger Teil gleitfähig in die Hauptbohrung 14 erstreckt und mit einem länglichen Schlitz 24 versehen ist, in welchen der untere Teil eines Anschlagbolzens 25 ein-

Koki Holdings ~~America Ltd.~~
Ex. 1002, p. 65

greift, der in eine Bohrung des Körpers 11 eingeschraubt ist. Es ist offensichtlich, daß der Anschlagbolzen 25 durch Berührung der Flächen des Führungsrohres 22, welche die einander entgegengesetzten Enden des Schlitzes 24 bilden, die Einwärts- und Auswärtsbewegung des Führungsrohres in der Hauptbohrung 14 des Körpers 11 begrenzt. Das Rohr 22 wird mittels einer Feder 27 auswärts, in die äußerste in Fig.1 dargestellte Lage, gedrückt, wobei die Feder den Treibkolben 18 umschließt und deren ein Ende der ringförmigen Schulter 28 anliegt, die durch den inneren Flansch 15 gebildet ist und deren anderes Ende an einer ringförmigen inneren Endfläche 29 des Führungsrohres 22 anliegt.

Das Führungsrohr 22 weist einen zweiten Längsschlitz 30 auf, durch den ein Betätigungsarm 32 eines Schalters 33 nach innen in das Führungsrohr erstreckt ist. Der normalerweise geschlossene Schalter 33 weist einen Kontakt 34 auf, der durch den Betätigungsarm 32 jedesmal, wenn dieser durch den Hammerkopf 20 berührt wird, betätigt wird, um den Schalter zu öffnen, wenn der Kolben und der Hammerkopf nach innen zurückgezogen werden. Das Führungsrohr 22 weist überdies einen äußeren Ansatz 36 auf, der einen Betätigungsarm 37 eines normal offenen Schalters 38 berührt, um den Kontakt 39 desselben in die Schließstellung zu bewegen. Die Schalter 33 und 38 können in dem gleichen Gehäuse 40 angeordnet sein, das in einer Ausnehmung 42 des Körpers 11 befestigt ist, die unmittelbar unter der Hauptbohrung 14 und in Verbindung mit

Koki Holdings America Ltd.
Ex. 1002, p. 66

dieser angeordnet ist. Es ist ersichtlich, daß bei der Einwärtsbewegung des Treibkolbens 18 aus der in Fig.1 dargestellten Lage in die zurückgezogene oder gespannte Lage, die in Fig.3 dargestellt ist, der normalerweise geschlossene Schalter 33 zuerst geöffnet wird und solange offen gehalten wird, als der Treibkolben sich in seiner im wesentlichen voll zurückgezogenen Lage befindet und daß der normalerweise offene Schalter 38 geschlossen wird, wenn das Führungsrohr 22 in seine voll zurückgezogene Lage bewegt wird.

Die Kontakte 34 und 39 der Schalter 33 bzw. 38 sind zueinander parallel und mit dem beweglichen Kontakt 46 eines Auslöseschalters 47, der im Handgriff 12 angeordnet ist, und einem Pumpenmotor 49 in Serie geschaltet, der eine Pumpe 50 treibt. Einerseits ist der Pumpenmotor 49 mit einer Klemme 52a der Stromversorgung 52 mittels eines Leiters 53 und andererseits mit dem beweglichen Kontakt 46 des Schalters 47 über einen Leiter 54 verbunden. Der feststehende Kontakt 55 des Auslöseschalters 47 ist mit einem feststehenden Kontakt 56 des normal geschlossenen Schalters 33 über den Leiter 57 und mit einem geschlossenen Kontakt 58 des normalerweise offenen Schalters 38 über die Leiter 57 und 60 verbunden. Der bewegliche Kontakt 34 des normal geschlossenen Schalters 33 ist mit der anderen Klemme 52b der Stromversorgung 52 durch einen Leiter 62 verbunden, während der bewegliche Kontakt 39 des normal offenen Schalters 38 an die andere Klemme 52b

Koki Holdings ~~America Ltd.~~
Ex. 1002, p. 67

der Stromversorgung mittels der Leiter 62 und 63 angeschlossen ist. Es ist ersichtlich, daß der Motor 49 immer an die Stromversorgung 53 angeschlossen und somit mit Energie versorgt ist, wenn der Auslöseschalter 47 und einer der Schalter 33 oder 38 geschlossen sind.

Das innere Ende des Treibkolbens 18 ist mit einem ringförmigen konisch verjüngten Kopf 65 versehen, der eine ringförmige Fläche oder Schulter 66 aufweist, welche die ringförmige Schulter 67 des ringförmigen Flansches 15 des Körpers 11 berührt, um die Auswärtsbewegung des Treibkolbens zu begrenzen. Die Endfläche oder Oberfläche 68 des Kopfes 65 ist im wesentlichen konkav und bildet einen Sitz für die ringförmige Dichtung 69, die in geeigneter Weise, wie z.B. durch Verkitten, an einer konvexen Fläche 70 eines Kraftspeicherkolbens 71 befestigt ist. Der Bereich der Fläche 68 des Kolbenkopfes, der durch die ringförmige Dichtung 69 abgedichtet ist, ist größer als die Querschnittsfläche des Treibkolbens 18 bei der Dichtung 16, so daß, wenn die Dichtung 69 zwischen dem Kraftspeicherkolben 71 und dem Treibkolbenkopf 65 abdichtet, jeder Flüssigkeitsdruck, der auf den Treibkolben wirkt, den Kolbenkopf gegen den Kraftspeicherkolben zu bewegen und in enger Berührung mit demselben zu halten sucht. In Übereinstimmung strebt der Druck des Mediums, der in die Bohrung 14 des Körpers 11 zwischen dem inneren Flansch 15 und dem Kraftspeicherkolben 71 eingebracht

Koki Holdings America Ltd.
Ex. 1002, p. 68

wird, wenn der Speicherkolben und der Treibkolben 18 die in Fig. 1 dargestellten Lagen einnehmen, den Treibkolbenkopf in Berührung mit dem Kraftspeicherkolben zu drücken und den Treibkolben in Fig. 1 nach rechts zu bewegen.

Die Hauptbohrung 14 des Körpers 11 ist bei 75 vergrößert, um einen Ausdehnungszylinder 76 aufzunehmen, der am Körper 11 auf geeignete Art dicht befestigt ist, wie z.B. durch Schweißen. Der Speicherkolben 71 ist innerhalb der Zylinderlänge beweglich und weist eine äußere ringförmige Nut auf, in der ein Dichtungsring (O-Ring) 78 oder irgendein anderes Dichtungsmittel angeordnet ist, um die Abdichtung zwischen dem Zylinderumfang und dem Kolben zu bewirken.

Eine verlängerte Kraftspeicherhülle ist auf den rückwärtigen Ansatz 82 des Körpers 11 festgeschraubt und eine Dichtung oder ein Dichtungsring 83 ist zwischen einer ringförmigen Schulter 84 des Körpers und dem ringförmigen Ende der Hülle 80 eingeführt, um eine mediumdichte Abdichtung zu bewirken. Unter Druck stehendes Gas kann über ein geeignetes Ventil 86 in die Kraftspeicher- bzw. Druckgaskammer 85 eingebracht werden, die durch die Speicherhülle 80 gebildet wird. Wenn die Kammer 85 mit einem unter Druck stehenden Gas gefüllt ist, so wird der Speicherkolben 71 nach links gedrückt, wie Fig. 1 zeigt, und strebt den Treibkolben 18 in der in Fig. 1 gezeigten Lage zu halten, wobei die ringförmi-

Koki Holdings America Ltd.
Ex. 1002, p. 69

ge Dichtung 69 zwischen den Flächen 68 des Treibkolbenkopfes 65 und der Fläche 70 des Speicherkolbens dichtet.

Das nicht zusammendrückbare Medium wird in die Hauptbohrung 14 zwischen der Schulter 67 des inneren Flansches 15 des Körpers 11 und dem Speicherkolben 71 durch einen Kanal 88 im Körper eingebracht, wobei der Kanal die Hauptbohrung mit dem Auslaß 90 der Pumpe mittels der Rohrleitung 91 verbindet, deren beide Enden mit dem Körper bzw. dem Pumpenauslaß durch Armaturen 92 bzw. 93 verbunden sind. Die Pumpe 50 und deren Antriebsmotor 49 sind auf einem Befestigungsarm 94 des Körpers 11, z.B. durch Bolzen 95, befestigt, die in Gewindebohrungen im Befestigungsarm erstreckt sind. Der Pumpeneinlaß 96 ist mit einem Behälter 98 über eine Rohrleitung 99 verbunden, deren Enden mit dem Pumpeneinlaß und dem Behälter durch Armaturen 100 bzw. 101 verbunden sind. Die Rohrleitung 99 steht mit der großen Kammer 104 des Reservoirs 98 über die Auslaßöffnung 105 in Verbindung. Der Behälter 98 ist am Körper 11 befestigt, beispielsweise mittels Bolzen 106, die durch seitliche Ansätze 107 des Behälters in Gewindebohrungen im Körper 11 erstreckt sind. Eine Dichtung 109 ist zwischen dem Behälter 98 und der oberen Fläche des Körpers 11 eingesetzt, um eine mediumdichte Abdichtung um die Einlaßöffnung 111 des Behälters und den Umleitungskanal 112 herum zu bewirken. Die Einlaßöffnung 111 mündet in die große Kammer 104 des Behälters 98 in der Nähe des Endes dieser Kammer, das durch die Kappe 113 verschlossen ist, die in das

Koki Holdings America Ltd.
Ex. 1002, p. 70

offene Behälterende eingeschraubt ist, wobei ein Dichtungsring 114 eine mediumdichte Abdichtung bewirkt. Der Umleitungskanal 112 mündet in das untere Ende einer Ventilkammer 115 unterhalb eines Ringsitzes 116, der im Körper 11 angeordnet ist, um einen Sitz für das Kugelventil 117 zu bilden. Die Ventilkugel 117 wird gegen den Ventilsitz 116 mittels einer Feder 119 gedrückt, deren unterer Endteil die Ventilkugel berührt und deren oberer Teil über einen abwärts gerichteten Vorsprung 120 eines Schraubeinsatzes 121 geschoben ist, welche das obere Ende der Ventilkammer 115 abschließt. Ein Kanal 122 stellt die Verbindung zwischen der Ventilkammer 115 und dem Kanal 88 her. Es ist ersichtlich, daß der Druck des durch den Kanal 88 gepumpten Mediums das Kugelventil 117 in geschlossener Stellung auf dem Ringsitz 116 zu halten sucht, wodurch die Strömung von Medium zwischen dem Umleitungskanal 112 und dem Kanal 88 verhindert ist.

Das Kugelventil 117 ist normal in offener Lage mittels einer Stange 125 gehalten, welche durch den Körper 11 nach oben mittels eines im Körper angeordneten Kanals 127 in die Ventilkammer 115 und durch den Ringsitz 116 erstreckt ist und die Ventilkugel 117 berührt. Ein Dichtungsring (O-Ring) 128 od.dgl. ist im Kanal 127 zur Abdichtung zwischen Betätigungsstange 125 und Körper 11 angeordnet. Das untere Ende der Stange 125 ist in den hohlen Handgriff 12 erstreckt. Die

Koki Holdings ~~America Ltd.~~
Ex. 1002, p. 71

Betätigungsstange 125 ist mittels Führungsbolzen 129 gelagert und in ihrer Lage gehalten, wobei die Führungsbolzen in bezug auf den Handgriff außermittig angeordnet sind, um einen Auslösehebel 130 frei beweglich zu halten. Letzterer ist zwischen seinen Enden bei 131 drehbar gelagert, wobei der Drehzapfen am Handgriff 12 befestigt ist. Der Auslösehebel hat einen für den betätigenden Finger bestimmten Teil 132, der durch einen Schlitz 133 des Handgriffes nach außen erstreckt ist. Der Auslösehebel ist zur Erzielung einer dem Uhrzeigersinn entgegengesetzten Bewegung um seine Drehzapfen durch eine Feder 134 vorgespannt, deren Enden gegen eine Wand des Handgriffes und gegen das untere Ende 135 des Auslösers drücken. Der Auslösehebel und der Handgriff sind mit Federhaltebolzen 136 bzw. 137 versehen, die in die einander entgegengesetzten Enden der Feder erstreckt sind.

Der Auslösehebel weist einen Arm 140 auf, der mit dem unteren Ende der Betätigungsstange 125 in Berührung treten kann, um diesen in seiner gehobenen Stellung zu halten, wobei dieser die Ventilkugel 117 von dem Ringsitz 116 entfernt hält. Außerdem berührt der Arm 140 des Auslösehebels den Auslöseschalter 47 und schließt ihn, wenn der Auslösehebel im Uhrzeigersinn gegen den Widerstand der Feder 134 verschwenkt wird, wie es auftritt, wenn der Bedienungsmann den Fingerteil 132 des Auslösehebels in den Handgriff hineindrückt.

Koki Holdings America Ltd.
Ex. 1002, p. 72

Eine derartige Bewegung des Auslösehebels im Uhrzeigersinn bewirkt eine Abwärtsbewegung der Betätigungsstange 125 infolge der Schwerkraft und auch infolge der Kraft der Ventilfeder 119. Wenn der Bedienungsmann die auf den Fingerteil 132 ausgeübte Kraft vermindert, so dreht die Kraft der Feder 134 den Auslösehebel entgegengesetzt dem Uhrzeigersinn, wodurch das Öffnen des normalerweise offenen Schalters 47 und unmittelbar darauf die Aufwärtsbewegung der Bedienungsstange 125 zum Öffnen des Kugelventils 117 bewirkt wird.

Das inkompressible Arbeitsmedium in der großen Kammer 104 des Behälters 98 ist mittels eines Kolbens 150 unter einem vorbestimmten Druck gehalten, wobei der Kolben durch eine Füllung von zusammengepreßtem Gas, das in einer kleinen Kammer 151 des Behälters enthalten ist und gegen das Ende des abgesetzten Kolbenschaftes 152 wirkt, nach einwärts gedrückt wird. Der abgesetzte Kolbenschaft 152 ist mit einer äußeren ringförmigen Nut versehen, in der ein Dichtungsring (O-Ring) 154 zur Abdichtung zwischen dem Kolbenschaft und der zylindrischen Innenwand des Behälters angeordnet ist, welche die kleine Kammer 151 begrenzt. Der Kolben 150 seinerseits ist analog mit einer äußeren ringförmigen Ausnehmung versehen, in der ein Dichtungsring (O-Ring) 156 od.dgl. eingesetzt ist, der zur Abdichtung zwischen dem Kolben und der zylindrischen Innenwand dient, welche die große Kammer 104 des Behälters begrenzt. Eine Lüftungsöffnung 157 ist an dem von den Öffnungen 105 und 111 der großen Kammer 104 ent-

BAD ORIGINAL

Koki Holdings America Ltd.
Ex. 1002, p. 73

fernten Ende derselben angeordnet, um den Ein- und Austritt von Luft hinter dem Kolben 150 zu ermöglichen, wenn der Kolben im Behälter 98 hin- und herbewegt wird. Ein Gasabsperrorgan 159 ist vorgesehen, durch das Gas unter Druck in die kleine Kammer 151 hinter dem Kolbenschaft 152 eingebracht werden kann.

Es ist ersichtlich, daß der Kolben 150 des Behälters 98 das nicht zusammendrückbare Arbeitsmedium in der großen Kammer 104 des Behälters unter einem vorbestimmten Druck hält und daß der Kolben 150 gegen die Abschlußkappe 113 bewegt wird, wenn das nicht zusammendrückbare Arbeitsmedium aus der großen Kammer hinaus und in die Hauptbohrung 14 des Körpers 11 gepumpt wird, um die Bewegung des Speicherkolbens 71 und des Treibkolbens 18 gegen ihre zurückgezogene oder gespannte Lage zu bewirken.

Der Umstand, daß das Arbeitsmedium im Behälter 98 unter einem vorbestimmten Druck gehalten wird, verringert die Belastung der Pumpe 50, welche das Arbeitsmedium aus der großen Kammer 104 des Behälters in die Hauptbohrung 14 des Körpers 11 gegen den auf den Speicherkolben 71 durch das zusammengedrückte Gas, das in der Kammer 85 enthalten ist, ausgeübten Druck pumpt.

Die normale Ruhelage des Speicherkolbens 71 und des

Koki Holdings America Ltd.
Ex. 1002, p. 74

Treibkolbens 18 sind in Fig.1 dargestellt, wobei die Schulter 66 des Kopfes 65 des Treibkolbens die ringförmige Schulter 67 des inneren Flansches 15 des Körpers 11 berührt, welche dadurch die Auswärtsbewegung des Treibkolbens begrenzt, und wobei der Speicherkolben 71 gegen den Kopf 65 durch die Kraft des zusammengepreßten Gases in der Kammer 85 gepreßt wird. Die Speicherkolbendichtung 69 verhindert nun das Anlegen eines Flüssigkeitsdruckes über den vollen Querschnitt der Fläche 68 des Kopfes 65.

Wenn eine Arbeit, wie z.B. das Einschlagen eines Nagels, mittels der Antriebsvorrichtung durchgeführt werden soll, so wird der Auslösehebel 130 im Uhrzeigersinn um seinen Drehzapfen 131 durch Drücken des Fingerteils 132 nach innen verschwenkt. Diese Bewegung des Auslösehebels bewirkt, daß die Stange 125 abwärts bewegt wird und die Bewegung der Ventilkugel 117 in ihre geschlossene Stellung gestattet. Die Vollendung der Bewegung des Schalthebels 130 schließt den Auslöseschalter 147 und verbindet, da der normal geschlossene Schalter 33 nun in seiner geschlossenen Stellung ist, weil sein Betätigungsarm 32 nun mit dem Kopf 20 nicht in Berührung steht, den Motor 49 mit der Stromversorgung 52, wodurch der Motor mit Energie versorgt wird. Das Arbeitsmedium wird dadurch mittels derPumpe 50 aus der großen Kammer 104 des Behälters 98 in den Kanal 88 des Körpers 11 und schließlich in die Hauptbohrung 14 zwischen den ringförmigen Flansch 67

Koki Holdings ~~America Ltd.~~
Ex. 1002, p. 75

und den Speicherkolben 71 gepumpt. Da das Kugelventil 117 sich nun in geschlossener Stellung befindet, kann kein Arbeitsmedium von dem Kanal 88 durch den Umleitungskanal 112 in die große Kammer 104 zurückfließen. Wenn das Arbeitsmedium in die Hauptbohrung 14 des Körpers 11 gepumpt wird, so bewirkt es eine Bewegung des Speicherkolbens 71 und des Treibkolbens 18 nach rechts, wie in Fig. 1 strichpunktiert angedeutet ist. Der Treibkolben 18 wird deshalb zur Bewegung nach rechts gemeinsam mit dem Speicherkolben 71 veranlaßt, da, wie bereits erläutert, der durch die Dichtung 69 abgedichtete Bereich der Fläche 68 größer als die Querschnittsfläche des Kolbens 18 an der Dichtung 16 ist, so daß der auf den Treibkolben wirkende Mediumdruck den Treibkolben gegen den Speicherkolben zu drücken sucht. Die fortgesetzte Einbringung von Arbeitsmedium in die Hauptbohrung 14 zwingt den Speicherkolben 71 und den Treibkolben 18, sich in ihre voll zurückgezogenen Stellungen, wie in Fig.3 gezeigt, gegen den durch das in dem Kraftspeicher oder Kraftkammer 85 zusammengepreßte Gas ausgeübten Druck zu bewegen. Der Treibkolben und der Speicherkopf bewegen sich nach rechts, bis der rückwärtige Rand bzw. die Schulter 165 des Hammerkopfes 20 des Treibkolbens 18 den Betätigungsarm 32 des normal geschlossenen Schalters 33 berührt. Wenn zu dieser Zeit das Führungsrohr 22 nicht nach innen in die in den Fig.3 und 4 gezeigte Lage bewegt worden ist, so schaltet das Öffnen des Schalters 33 den Motor 49 vom Versorgungsstromkreis ab und die Bewe-

Koki Holdings America Ltd.
Ex. 1002, p. 76

gung des Treibkolbens und des Speicherkolbens wird beendet. Wenn das vordere Ende des Führungsrohres 22 dann gegen das Werkstück oder Bauelement, in das der Nagel eingeschlagen werden soll, gedrückt wird und die Antriebsvorrichtung vorwärtsbewegt wird, so daß der rückwärtige Teil des Führungsrohres in die Hauptbohrung 14 hineinverschoben wird, so berührt der äußere Ansatz 36 den Betätigungsarm 37 des normalerweise offenen Schalters 38 und schließt diesen Schalter, so daß der Motor 49 wiederum an den Eingangsstromkreis 52 angeschlossen ist. Darauf beginnt die Pumpe 50 wiederum Medium in die Hauptbohrung 14 zu pumpen, wodurch eine weitere Bewegung des Treibkolbens 18 und des Speicherkolbens 71 nach rechts bewirkt wird, bis eine solche Weiterbewegung des Treibkolbens durch die Berührung der Schulter 165 seines Hammerkopfes 20 mit der ringförmigen Schulter 28 des inneren Flansches 15 verhindert wird. Zu dieser Zeit ist der Treibkolben 18 in seiner vollständig zurückgezogenen oder gespannten Lage. Der Speicherkolben 71 dagegen hat die Freiheit, eine derartige Bewegung fortzusetzen, wenn das Pumpen des Arbeitsmediums fortgesetzt wird. Unmittelbar nach einer derartigen Bewegung des Speicherkolbens 71 relativ zu dem nun stehenbleibenden Treibkolben 18 wird die Dichtung zwischen den Flächen 68 und 70 des Treibkolbenkopfes 65 bzw. des Speicherkolbens 71 aufgehoben. Der Druck des Arbeitsmediums wird nun auf die gesamte Querschnittsfläche der konkaven Fläche 68 des Treibkolbenkopfes 65 ausgeübt und als eine Wirkung dieses Umstandes wird der Treibkolben nun kräftig und mit großer Geschwindigkeit zufolge der durch das zusammengepreßte

Koki Holdings America Ltd.
Ex. 1002, p. 77

Gas des Arbeitsmediums in der Hauptbohrung und in dem Ausdehnungszylinder 76 ausgeübten Kraft nach links bewegt. Der Speicherkolben bewegt sich dahinter und folgt dem Treibkolben, da er sich jedoch über den vollen Querschnitt der Bohrung des Ausdehnungszylinders 76 erstreckt, bewegt er sich mit einer geringeren Geschwindigkeit als der Treibkolben. Eine derartige Bewegung des Treibkolbens 18 treibt selbstverständlich den Nagel in das Werkstück oder Bauwerk. Das kegelstumpfförmige Ende des Kopfes 65 bewirkt, daß der Kopf Arbeitsmedium in dem verringerten ringförmigen Raum zwischen den ringförmigen Schultern 67 und 165a einzuschließen versucht, wenn der Kopf 65 den ringförmigen Flansch 15 erreicht, da der ringförmige Raum zwischen dem Kopf und dem inneren Rand der Schulter 165a verringert wird, wenn sich der Kopf hinter der Schulter 165a gegen die Schulter 67 bewegt. Der Durchmesser der ringförmigen Oberfläche 166 ist kleiner als der Durchmesser des Ausdehnungszylinders. Als Ergebnis verlangsamt dieses Einschließen von Arbeitsflüssigkeit den Treibkolben 18, wenn er das Ende seines Arbeitshubes erreicht, und mildert den Stoß der Berührung der Schulter 66 des Kopfes 65 mit der Schulter 67 des ringförmigen Flansches 15. Der Speicherkolben 71 ist nun von dem Treibkolben 18 infolge der Anwesenheit von zusätzlichem Arbeitsmedium ferngehalten, das durch die Pumpe 50 in die Hauptbohrung und in den Ausdehnungszylinder gepumpt worden ist. Die Pumpe 50 kann selbstverständlich das Pumpen während des Arbeits- oder Antriebshubes des Treibkolbens fortsetzen, aber

Koki Holdings America Ltd.
Ex. 1002, p. 78

die Bewegung des Treibkolbens ist primär durch die Kraft bewirkt, die durch das zusammengepreßte Gas in der Kammer 85 ausgeübt wird, welche durch den Speicherkolben 71 dem Arbeitsmedium übertragen wird.

Wenn der Nagel in das Werkstück oder Gebäude eingeschlagen ist, so läßt der Bedienungsmann den Auslösehebel 130 los, um dessen Bewegung entgegengesetzt dem Uhrzeigersinn zufolge der von der Feder 134 ausgeübten Kraft zu gestatten, wodurch der Motor 49 abgeschaltet und die Betätigungsstange 125 gehoben wird, um das Kugelventil zu öffnen.

Das Arbeitsmedium vor dem Speicherkolben 71 wird nun durch den Druck des zusammengepreßten Gases in der Kammer 85 gezwungen, sich durch den Kanal 88, den Kanal 122, die Ventilkammer 115 und den Umleitungskanal 112 in die große Kammer 104 zu bewegen, da die auf den Kolben 152 durch das zusammengepreßte Gas in der Kammer 151 ausgeübte Kraft auf das Arbeitsmedium in der Kammer 104 geringer ist, als die Kraft, die von dem zusammengepreßten Gas auf das Arbeitsmedium in der Hauptbohrung vor dem Speicherkolben 71 ausgeübt wird. Infolgedessen bewegt sich der Speicherkolben nach links, bis seine Dichtung 62 wieder die Fläche 68 des Kopfes 65 des Treibkolbens 18 berührt und wiederum eine Abdichtung zwischen dem vorbestimmten Bereich der Flächen 68 und 70 des Kopfes 65 bzw. des Kolbens 71 bewirkt wird. Die Antriebsvorrichtung ist nun zu einem neuen Arbeitszylklus bereit.

Koki Holdings ~~America Ltd.~~
Ex. 1002, p. 79

Es ist offensichtlich, daß die dargestellte und beschriebene Arbeitsvorrichtung die Arbeit zufolge der Ausdehnung des zusammengedrückten Gases in dem Kraftspeicher bzw. in der Gaskammer 85 durchführt, da das in die Gaskammer 85 eingeführte Gas bereits einen verhältnismäßig großen Druckwert, z.B. 70 Atmosphären, aufweisen kann und das weitere Zusammenpressen des Gases in der Kammer 85 infolge der Bewegung des Speicherkolbens 71 in dem Ausdehnungszylinder 76 mittels der nicht zusammendrückbaren Arbeitsflüssigkeit bewirkt, daß das Arbeitsmedium einen Druck von noch höherem Wert, z.B. 140 Atmosphären annimmt und daß die auf diese Weise im zusammengepreßten Gas gespeicherte Energie verwendet wird, um den Treibkolben 18 zu betätigen, der solche Funktionen, wie z.B. das Einschlagen eines Nagels ausführen kann.

Weiter ist festzustellen, daß das Betätigen oder Freigeben des Treibkolbens 18 ohne der Verwendung von irgendwelchen Ventilen oder sonstigen Einrichtungen erfolgen kann, die beispielsweise in der USA-Patentschrift Nr. 2 867 086 beschrieben sind und für Beschädigung und Fehlleistungen empfänglich sind, da die Beendigung der Bewegung des Treibkolbens, wenn er sich in seiner vollen zurückgezogenen oder gespannten Lage befindet, und die fortgesetzte Bewegung des Speicherkolbens bei der erfindungsgemäßen Ausführung automatisch bewirken, daß der Treibkolben in seine voll ausgefahrene Lage bewegt wird, wobei der Treibkolben Arbeit während dieser antreibenden Bewegung bzw. dieses Hubes ausübt.

009812/0346

Koki Holdings America Ltd.
Ex. 1002, p. 80

Wenn erwünscht, können der Umleitungskanal 112, das Kugelventil 117 und dessen Betätigungsstange 125 weggelassen werden, wobei die Rückkehr des Arbeitsmediums aus der Hauptbohrung 14 des Körpers 11 in den Behälter 98 dann durch die Pumpe 50 erfolgt, welche dadurch zur Drehung in ihrer entgegengesetzten Richtung veranlaßt wird, wenn das Arbeitsmedium durch sie in die große Kammer 104 durch den Druck des zusammengepreßten Gases in der Kammer 85, das auf den Speicherkolben 71 wirkt, getrieben wird.

Wenn erwünscht, kann die Kammer 85 für das zusammengepreßte Gas durch einen geeigneten Strömungskanal oder eine Leitungseinrichtung mit der kleinen Kammer 151 des Behälters 98 verbunden werden, so daß der Druck des zusammengepreßten Gases von der Kraftspeicher- oder Druckgaskammer 85 verwendet werden kann, den Behälterkolben 150 vorzuspannen.

Obwohl eine elastische Dichtung 69 zur Bildung der Abdichtung zwischen den einander gegenüberliegenden Flächen 68 und 70 des Treibkolbenkopfes bzw. des Speicherkolbens beschrieben und dargestellt wurde, kann eine dieser Flächen statt dessen mit einem ringförmigen Flansch versehen sein, der die andere Fläche berührt, um eine metallische Dichtung zu bilden. In dem Falle, daß die elastische Dichtung 69 der Art von Dichtungsringen (O-Ring) angehört, die abgebogen oder nach innen deformiert werden muß, um eine gute Abdichtung zwischen den Flächen zu bewirken, so kann der Kol-

Koki Holdings America Ltd.
Ex. 1002, p. 81

benkopf 65, wie in Fig.6 dargestellt ist, mit einer Ausnehmung 170 versehen sein, in welche ein elastisches Glied eingesetzt sein kann, das einen Lufteinschluß aufweist, wie z.B. eine Kugel 171, die aus Gummi, Kunststoff od.dgl. besteht, oder z.B. ein Schwamm, der Luft in seinen Poren oder Lücken enthält, so daß die Zusammenpressung des Gases, das in einer derartigen Kugel oder in den Poren eines derartigen Schwammes enthalten ist, eine solche Verformung der Dichtung 69 gestattet. Das zwischen den Flächen in einer derartigen Dichtung eingeschlossene Arbeitsmedium gestattet natürlich keine solche Verformung oder Verbiegung des Dichtungsringes nach innen, da es nicht zusammenpreßbar ist.

Es ist ersichtlich, daß die Arbeitsvorrichtung 10 einen Körper enthält, der eine Bohrung 14 aufweist, in dem ein Treibkolben 18 hin- und herbewegbar ist und daß der Kolben ein Ende aufweist, das aus der Bohrung nach außen verschiebbar ist, daß der Körper Einrichtungen aufweist, welche den Abschnitt der Bohrung zwischen den Schultern 67 und 165a des Körpers und dem Zylinderansatz 76 enthalten, der einen Zylinder bildet, daß der Treibkolben sein entgegengesetztes Ende in den derartigen Zylinder erstreckt und daß schließlich ein Speicherkolben 71 in diesem Zylinder beweglich angeordnet ist und daß die zusammengepreßte Luft in der Kammer 85, die durch den Körper und die Kraftspeicherhülle 80 gebildet ist, eine Einrichtung zum Drücken des Speicherkolbens gegen den Treibkolben ist.

Koki Holdings America Ltd.
Ex. 1002, p. 82

Es ist weiter ersichtlich, daß der Speicherkolben, wenn er den Treibkolben berührt, einen vorbestimmten Bereich des Treibkolbens gegen den Druck des Arbeitsmediums abdichtet, das in den Zylinder mittels einer geeigneten Einrichtung, wie z.B. die Pumpe 50, eingebracht wird, und daß der Körper und der Treibkolben miteinander in Berührung tretende Einrichtungen 66 bzw. 67 aufweisen, um die Bewegung des Treibkolbens zu begrenzen, so daß die fortgesetzte Bewegung des Speicherkolbens, nachdem die Bewegung des Treibkolbens durch die Begrenzungseinrichtungen eingestellt wurde, bewirkt, daß sich der Speicherkolben vom Treibkolben löst, um den vorbestimmten Bereich des Treibkolbens dem Druck des Antriebsmediums auszusetzen, so daß die Druckeinrichtung, die über den Speicherkolben und das Arbeitsmedium wirkt, wirksam wird, um den Treibkolben aus seiner zurückgezogenen Lage in seine äußere Lage zu bringen.

Es ist weiter ersichtlich, daß der Treibkolben 18 einen Kopf 65 aufweist, der zusammen mit dem abgesetzten Teil eines derartigen Zylinders, welcher Teil durch die ringförmige Fläche 166 gebildet ist, zusammenwirkt, um ein federndes oder stoßdämpfendes Mittel zur Verlangsamung der Bewegung des Treibkolbens zu bilden, wenn er die äußere Grenze seiner Bewegung in seine äußere Lage erreicht.

Es ist weiter ersichtlich, daß die Einrichtung zum

Koki Holdings ~~America Ltd.~~
Ex. 1002, p. 83

Einbringen nicht zusammendrückbaren Antriebsmediums und der Druck in dem Zylinder zur Bewegung des Treibkolbens und des Speicherkolbens in ihre zurückgezogenen Lagen eine Pumpe 50 einschließt, die durch einen Motor 49 angetrieben ist, und daß die Betätigung des Motors durch die Schalter 33 und 38 gesteuert ist, welche mittels des Führungrohres 22 betätigbar sind, um zu gewährleisten, daß das vordere Ende des Führungsrohres gegen das Gebilde gepreßt sein muß, in welches der Nagel eingeschlagen werden soll, bevor der Treibkolben für seine Arbeits- oder Antriebsbewegung oder seinen Schlag freigegeben wird.

Es ist weiter ersichtlich, daß ein Nebenschlußweg vorgesehen ist, um dem Arbeitsmedium zu gestatten, sich aus dem Zylinder in einen Behälter während der Vervollständigung eines Arbeitsspieles der Einrichtung zu bewegen und daß der Kolben 150 vorgesehen ist, um das Arbeitsmedium im Behälter unter einem vorbestimmten Druck zu halten, um die Belastung der Pumpe zu vermindern.

Der Treibkolbenkopf 65 kann auch mit einem Kanal 173 versehen sein, der seitlich des Kopfes mündet und in der Längsrichtung in eine Ventilkammer 174 führt, wie Fig. 6 zeigt. Eine konische Oberfläche 175 des Kolbenkopfes bildet einen Sitz für das Kugelventil 176, das gegen den Sitz durch eine Feder 177 gedrückt ist. Ein Ende dieser Feder ist an

BAD ORIGINAL

Koki Holdings America Ltd.
Ex. 1002, p. 84

der Ventilkugel und das andere Ende an der inneren Fläche eines Einsatzes 178 abgestützt, der in die die Ventilkammer bildende Bohrung des Kopfes eingeschraubt ist. Die Kraft, mit der die Ventilkugel in Berührung mit dem Ventilsitz gehalten ist, kann durch Verdrehen des Einsatzes 178 justiert werden. Dieser Einsatz weist einen Kanal 179 auf, welcher den Zutritt von unter Druck stehendem Arbeitsmedium durch den Kanal 173 zu der Fläche 68 des Kolbenkopfes innerhalb der Dichtung 68 gestattet, wenn das Kugelventil geöffnet ist.

Es ist ersichtlich, daß, falls der Kolbenkopf mit dem Kanal 173 und dem Kugelventil 175 versehen ist, der durch die Feder 177 auf die Ventilkugel ausgeübte Druck so eingestellt sein muß, daß das Kugelventil durch den vom Arbeitsmedium ausgeübten Druck in seine offene Stellung gebracht wird, wenn der Treibkolben und der Speicherkolben die gespannte Lage erreichen, um das Aufbringen des Druckes des Arbeitsmediums auf den vollen Bereich seiner Fläche 65 und das nachfolgende Bewegen des Treibkolbens in seine äußerste Lage zu gestatten. In diesem Fall kann die gespannte Stellung die durch den Treibkolben gerade vor der Berührung der Schulter 165 des Hammerkopfes 20 mit der ringförmigen Schulter 28 des inneren Flansches 15 erreichte Stellung sein, so daß der Hammerkopf niemals die ringförmige Schulter erreicht. Diese Art der Betätigung beugt daher dem Stoß und der Erschütterung vor, die anderseits durch eine derartige Berührung auf die Antriebseinrichtung wirken würden.

Koki Holdings ~~America Ltd.~~
Ex. 1002, p. 85

Es ist ersichtlich, daß der Kanal 173 und das Kugelventil des Kopfes eine Einrichtung zum Aufbringen des Drukkes des Arbeitsmediums auf die Fläche des Treibkolbens bilden, wenn dieser eine vorbestimmte gespannte Stellung in der gleichen Weise erreicht, wie die Schulter 28 und die Schulter 165 des ringförmigen Flansches 15 bzw. des Hammerkopfes solche Einrichtungen bilden.

Wenn erwünscht, so kann das Kugelventil auch mit einer solchen Kraft gegen seinen Sitz gedrückt werden, daß es geschlossen bleibt, bis der Hammerkopf die Schulter 28 berührt und die Bewegung des Treibkolbens dadurch aufgehalten ist. Der nachfolgende plötzliche Druckanstieg im Zylinder und die Druckverminderung zwischen den Flächen 68 und 70 infolge der Entfernung des Speicherkolbens vom Treibkolben verursachen nun, daß die Ventilkugel sich in ihre offene Stellung bewegt, bevor der Druck zu einem solchen Wert ansteigt, daß die Dichtung 69 brechen könnte. Da in jeder dieser beiden Betätigungsarten des Kugelventils die Dichtung nicht gewaltsam aufgehoben wird und nicht den verhältnismäßig großen Druckdifferenzen, die anderseits zu einer gewaltsamen Aufhebung der Dichtheit notwendig wäre, ausgesetzt ist, wird die Lebensdauer der Dichtung verlängert.

In Fig. 5 ist schematisch eine abgewandelte Ausführungsform der Antriebsvorrichtung dargestellt, deren Treibkolben 200 und deren Speicherkolben 201 gleitfähig in einem

ORIGINAL INSPECTED

Koki Holdings America Ltd.
Ex. 1002, p. 86

Zylinder 202 angeordnet sind, dessen eines Ende mittels einer Rohrleitung 203 an einen verjüngten Abschnitt 204 eines Zylinders 206 angeschlossen ist, der eine Gaskammer 205 mit kleinem Durchmesser bildet und dessen erweiterter Abschnitt 207 die große Behälterkammer 208 bildet, in der das nicht zusammendrückbare Arbeitsmedium enthalten ist. Der Einlaß 210 der Pumpe 211 steht mit der Behälterkammer 208 für das Arbeitsmedium in Verbindung, während ihr Auslaß 213 mit dem Zylinder 202 an jenem Ende desselben verbunden ist, das von jenem Ende entfernt ist, welches durch die Rohrleitung 203 mit dem Zylinder 202 verbunden ist. Ein Kolben 214 weist einen vergrößerten Kopf 215 auf, der in dem größeren Abschnitt 207 des Zylinders 206 angeordnet ist. Der Kopf 215 ist mit einem Dichtungsring 216 (O-Ring) oder einem anderen Dichtungsmittel versehen, um die Abdichtung zwischen dem Kopf und dem Zylinder zu bewirken. Der Kolben 214 ist an seinem von dem vergrößerten Kopf 215 entfernten Endteil mit einer Dichtung 218, z.B. einem Dichtungsring (O-Ring) versehen, der die Abdichtung zwischen dem Kolben und dem verjüngten Abschnitt 204 des Zylinders bewirkt.

Der Speicherkolben 201 ist mit einer Dichtung 220 versehen, die zwischen dem Zylinder 202 und dem Speicherkolben wirkt. Eine geeignete Dichtung 225, welche denselben Aufbau und dieselbe Aufgabe wie die Dichtung 69 der in Fig.1

BAD ORIGINAL

Koki Holdings America Ltd.
Ex. 1002, p. 87

dargestellten Ausführung aufweist, bewirkt die Abdichtung zwischen der Fläche 226 des Speicherkolbens 201 und der Fläche 227 des Kopfes 228 des Treibkolbens.

Wie in Fig.5 gezeigt, gestattet eine Lüftungsöffnung 230 des Zylinders 207 den Eintritt und den Austritt von Luft aus dem Zylinder,, zwischen der Schulter 232 und dem vergrößerten Kopf 215. Die Pumpe 211 wirkt in der gleichen Weise wie die Pumpe 50, um nicht zusammendrückbares Arbeitsmedium von der großen Kammer 208 des Zylinders 206 in den Zylinder 202 zu pumpen, um den Treibkolben 200 und den Speicherkolben 201 in ihre zurückgezogene oder voll gespannte Stellung zu bewegen, wobei der Treibkolben freigegeben wird, sobald seine Bewegung beendigt wurde, während die Bewegung des Speicherkolbens 201 fortgesetzt wird, so daß die Antriebsbewegung des Treibkolbens zur Arbeitsleistung frei ist, wie z.B. zum Einschlagen eines Nagels.

Nachdem der Treibkolben 200 in seine äußerste Lage durch den Druck des zusammengepreßten Gases bewegt worden ist, wird das Arbeitsmedium in die große Kammer 208 zurückbewegt, da der Speicherkolben 201 und der Kolben 214 kleinere Flächen aufweisen, die dem Druck des zusammengepreßten Gases ausgesetzt sind als die Fläche des Kolbenkopfes 215, der über die Pumpe 211 während der Vervollständigung eines

Koki Holdings America Ltd.
Ex. 1002, p. 88

Arbeitshubes des Treibkolbens 200 mit Arbeitsmedium solange beaufschlagt wird, bis der Speicherkolben 201 wiederum die Dichtung 225 des Treibkolbenkopfes 228 berührt. Überdies kann der die Pumpe 211 antreibende Motor umkehrbare Drehrichtungen aufweisen und durch einen gleichfalls umkehrbare Drehrichtungen aufweisenden Motor angetrieben sein, so daß das Arbeitsmedium aus dem Zylinder 202 in die große Kammer 208 des Zylinders 207 zurückgepumpt werden kann, sobald der Arbeitshub des Treibkolbens 200 beendet ist.

Es ist ersichtlich, daß die Flächen des Speicherkolbens 201 und des Kolbens 214, die in den Kammern 205 und 230a zusammengepreßten Gasen ausgesetzt sind, im wesentlichen gleich sind, daß aber die Fläche des Kolbenkopfes 215, die dem Druck des Arbeitsmediums in der Behälterkammer 208 ausgesetzt ist, größer als diese Flächen des Speicherkolbens und des Kolbens 214 sind. Demzufolge legt der Kolben 214 einen kleineren Weg als die Speicherkolben 201 zurück, wenn die Pumpe 211 eine größere Menge des Arbeitsmediums aus der Behälterkammer 208 in den Zylinder 202 bewegt, und das Volumen der Kammer 230a wird um einen größeren Betrag verringert als das Volumen der Kammer 205 vergrößert wird. Zusätzlich bewirkt die Einwärtsbewegung des Treibkolbens 200, wenn Arbeitsmedium in den Zylinder 202 gepumpt wird, eine weitere Bewegung des Speicherkolbens 201, wodurch eine weitere Volumsverminderung der Kammer 230a im Vergleich zum Volumsanstieg der Kammer 205 erfolgt. Demzufolge wird das den

BAD ORIGINAL

Koki Holdings America Ltd.
Ex. 1002, p. 89

Speicherkolben gegen den Treibkolben drückende Gase noch mehr zusammengepreßt, wenn sich der Treibkolben gegen seine voll zurückgezogene oder gespannte Stellung bewegt.

Es ist ersichtlich, daß der Durchmesser des Speicherkolbens 201 im Verhältnis zum Durchmesser des Kolbens 214 vergrößert oder der Durchmesser des Kolbenkopfes 215 verkleinert werden kann, um ein derartiges zusätzliches Zusammendrücken des Druckgases zu vermindern, so daß die Belastung der Pumpe während des ganzen Arbeitsganges der Antriebseinrichtung im wesentlichen gleichmäßig wäre.

Es ist auch ersichtlich, daß der Arbeitszyklus der Betätigung der Pumpe umgekehrt werden kann, wenn die Fläche des Kolbens 214, die dem Druck des zusammengepreßten Gases in der Kammer 205 ausgesetzt ist, größer als die Fläche des Kolbenkopfes 215 gemacht wird, die dem Druck des Arbeitsmediums in der Behälterkammer 208 ausgesetzt ist, so daß die Pumpe Arbeitsmedium aus dem Zylinder 202, nachdem der Treibkolben in seine äußerste Lage bewegt worden ist, zur Bewegung des Kolbens 214 nach links gegen die durch das in der Kammer 205 zusammengepreßte Gas ausgeübte Kraft und zur Bewegung des Speicherkolbens nach rechts, um den Treibkolben zu berühren, pumpt. Wenn die Pumpe nun abgestellt wird, so bewegt das auf den Kolben 214 wirkende zusammengedrückte Gas sowohl den Treibkolben als auch den Speicherkolben bis in ihre voll zurückgezogene oder gespannte Stellung nach links und wenn die volle Fläche 227 des Kopfes 228 des Treibkolbens

Koki Holdings America Ltd.
Ex. 1002, p. 90

dem Arbeitsmedium in der oben beschriebenen Weise ausgesetzt ist, so wird der Treibkolben nach rechts bewegt. Die Pumpe wird dann eingeschaltet, um wiederum Arbeitsmedium aus dem Zylinder 202 in die Behälterkammer 208 zu pumpen, so daß der Arbeitszyklus der Antriebsvorrichtung wiederholt werden kann.

Weiter kann, wie ersichtlich, das Arbeitsmedium im Behälter mittels eines Kolbens im Behälter unter einem vorbestimmten Druck gehalten werden, wobei der Kolben durch den Druck des zusammengepreßten Gases in der Druckgaskammer mit einer solchen Einrichtung vorgespannt werden kann, wie durch eine die Kammern 85 und 151 verbindende Rohrleitung oder die Leitung 203 (Fig.5), welche die Kammern 230a und 205 verbindet, wobei die Flächen des Speicherkolbens und des Behälterkolbens, die den Drücken des Druckgases und des Arbeitsmediums ausgesetzt sind, in einem solchen relativen Verhältnis stehen, daß sie eine erwünschte Belastung der Pumpe bewirken. In vielen Fällen ist es vorteilhaft, eine im wesentlichen konstante Belastung der Pumpe vorzusehen, was dadurch erreicht wird, daß die Flächen solche relativen Abmessungen aufweisen, daß sie einen erwünschten minimalen zusätzlichen Druck auf das zusammengepreßte Gas während des Pumpabschnittes des Betätigungsablaufes der Pumpe erzielen.

Die obige Erläuterung der Erfindung ist lediglich beispielsweise und ein Austausch von speziellen angeführten Kon-

BAD ORIGINAL

Koki Holdings America Ltd.
Ex. 1002, p. 91

struktionsmerkmalen ist möglich, ohne vom Erfindungsgedanken abzuweichen.

Koki Holdings America Ltd.
Ex. 1002, p. 92

P A T E N T A N W Ä L T E

PATENTANWÄLTE LICHT, HANSMANN, HERRMANN
8 MÜNCHEN 2 · THERESIENSTRASSE 33

Dipl.-Ing. MARTIN LICHT
Dr. REINHOLD SCHMIDT
Dipl.-Wirtsch.-Ing. AXEL HANSMANN
Dipl.-Phys. SEBASTIAN HERRMANN

33

GENERAL WIRE OVERSEAS
CORPORATION
Saint Louis / Missouri
407 North 8th Street
V. St. A.

München, den 25. September 1964

Ihr Zeichen

Unser Zeichen
-/HM

Dr. Expl.

1503164

Patentanmeldung: Antriebsvorrichtung

PATENTANSPRÜCHE

1. Antriebsvorrichtung, dadurch gekennzeichnet, daß ein Körper (11) eine Bohrung (14) aufweist, in der ein Treibkolben (18) hin- und herbewegbar ist, der mit einem aus der Bohrung nach außen erstreckbaren Endteil versehen ist, daß der Körper einen Zylinder aufweist, in den sich der entgegengesetzte Endteil des Treibkolbens erstreckt, daß ein Kraftspeicherkolben (71) im Zylinder hin- und herbewegbar ist, wobei der Kraftspeicherkolben durch eine Druckeinrichtung gegen den Treibkolben gedrückt und mit diesem in Berührung gebracht wird, und daß eine Einrichtung zum Einbringen eines Arbeitsmediums in den Zylinder vorgesehen ist, um den Treibkolben und den Kraftspeicherkolben in zurückgezogene Stellungen gegen die von der Druckeinrichtung ausgeübte Kraft zu bewegen.

009812/0346

Patentanwälte Dipl.-Ing. Martin Licht, Dipl.-Wirtsch.-Ing. Axel Hansmann Dipl.-Phys. Sebastian Herrmann
8 MÜNCHEN 2, THERESIENSTRASSE 33 · Telefon: 292102 · Telegramm-Adresse: Lipatli/München
Bankverbindungen: Deutsche Bank AG, Filiale München, Dep.-Kasse Viktualienmarkt, Konto-Nr. 716728
Bayer. Vereinsbank München, Zweigst. Oskar-von-Miller-Ring, Kto.-Nr. 882495 · Postscheck-Konto: München Nr. 163397
Oppenauer Büro: PATENTANWALT DR. RHEINHOLD SCHMIDT

2. Vorrichtung nach Anspruch 1, dadurch gekennzeichnet, daß ein nicht zusammendrückbares Arbeitsmedium vorgesehen ist.

3. Vorrichtung nach Anspruch 1 oder 2, dadurch gekennzeichnet, daß der Kraftspeicherkolben (71) einen vorbestimmten Bereich des Treibkolbens (18) gegen den Druck des Arbeitsmediums abschirmt, wenn der Kraftspeicherkolben mit dem Treibkolben in Berührung steht.

4. Vorrichtung nach einem der vorhergehden Ansprüche, dadurch gekennzeichnet, daß miteinander in Berührung tretende Begrenzungseinrichtungen zur Begrenzung der Bewegung des Treibkolbens (18) an diesem und dem Körper (11) vorgesehen sind, wodurch die fortgesetzte Bewegung des Speicherkolbens (71), nachdem die Bewegung des Treibkolbens durch die Begrenzungsmittel verhindert ist, die Lösung des Speicherkolbens vom Treibkolben bewirkt, wodurch der vorbestimmte Bereich des Treibkolbens dem Druck des Treibmediums ausgesetzt ist und die Druckeinrichtung wirksam wird, um den Treibkolben von der zurückgezogenen Lage in eine vorgeschobene Lage zu bewegen.

5. Vorrichtung nach einem der vorhergehenden Ansprüche, dadurch gekennzeichnet, daß eine vorzugsweise automatisch wirkende Einrichtung vorgesehen ist, die den vorbestimmten Be-

Koki Holdings America Ltd.
Ex. 1002, p. 94

reich des Treibkolbens dem Druck des Arbeitsmediums aussetzt, wenn der Treibkolben in eine vorbestimmte zurückgezogene Lage bewegt ist, wodurch die Druckeinrichtung wirksam wird, um den Treibkolben von der zurückgezogenen Lage in eine vorgeschobene Lage zu bewegen.

6. Vorrichtung nach einem der vorhergehenden Ansprüche, dadurch gekennzeichnet, daß der Treibkolben einen dem Arbeitsmedium ausgesetzten kleineren Durchmesser aufweist als der Kraftspeicherkolben.

7. Vorrichtung nach einem der vorhergehenden Ansprüche, dadurch gekennzeichnet, daß der Körper (11) eine mit jenem Ende des Zylinders verbundene Kammer (85) aufweist, das dem Zylinderende entgegengesetzt ist, in das sich der Treibkolben (18) erstreckt, wobei der Kraftspeicherkolben (71) im Zylinder zwischen der Kammer (85) und dem Treibkolben (18) hin- und herbewegbar ist.

8. Vorrichtung nach einem der vorhergehenden Ansprüche, dadurch gekennzeichnet, daß die Kammer (85) zur Aufnahme von unter Druck stehendem Gas dient, das den Speicherkolben (71) gegen den Treibkolben (18) drückt und in Berührung mit diesem hält, und daß die Einrichtung zur Einbringung des insbesondere inkompressiblen Arbeitsmediums in den Zylinder den

Koki Holdings ~~America Ltd.~~
Ex. 1002, p. 95

Treibkolben (18) und den Speicherkolben (71) an das andere Zylinderende gegen den durch das zusammengepreßte Gas ausgeübten Druck bewegt.

9. Vorrichtung nach einem der vorhergehenden Ansprüche, dadurch gekennzeichnet, daß die Einrichtung zum Einbringen des Arbeitsmediums einen Behälter für das Arbeitsmedium aufweist und eine Pumpeinrichtung zur Bewegung des Mediums aus dem Behälter in den Zylinder vorgesehen ist.

10. Vorrichtung nach einem der vorhergehenden Ansprüche, dadurch gekennzeichnet, daß am Körper (11) ein Führungsrohr (22) vorgesehen ist, das zwischen einer anfänglichen äußeren Stellung und einer zurückgeschobenen Stellung in Längsrichtung des Körpers beschränkt beweglich gelagert ist, wobei sich das eine Ende des Treibkolbens (18) in das Führungsrohr erstreckt, daß eine Einrichtung vorgesehen ist, die das Führungsrohr in seine äußere Stellung drückt, daß eine erste Einrichtung betätigbar ist, um die Pumpeinrichtung einzuschalten, während eine zweite Einrichtung durch die Bewegung des Treibkolbens von seiner äußeren Stellung in eine Stellung knapp vor seiner inneren Stellung betätigbar ist, die die Betätigung der Pumpeinrichtung verhindert, wenn die erste Einrichtung betätigt ist, und daß eine dritte Einrichtung in Abhängigkeit der Bewegung des Führungsrohres in seine rückwärtige Stellung vorgesehen ist, die die Betätigung

Koki Holdings America Ltd.
Ex. 1002, p. 96

der Pumpeneinrichtung gestattet, wenn die erste Einrichtung betätigt ist, auch wenn die zweite Einrichtung betätigt ist.

11. Vorrichtung nach einem der vorhergehenden Ansprüche, dadurch gekennzeichnet, daß der Treibkolben mit einem Kanal versehen ist, der an einem Ende mit dem Zylinder an einem Punkt verbunden ist, der von dem vorbestimmten Bereich abliegt, und dessen andere Öffnung in diesen Bereich mündet, und daß ein druckabhängiges Ventil zum Schließen dieses Kanals vorgesehen ist, durch das dieser Kanal geöffnet wird, wenn der Druck des Arbeitsmediums im Zylinder einen vorgegebenen Wert übersteigt.

12. Vorrichtung nach einem der vorhergehenden Ansprüche, dadurch gekennzeichnet, daß automatisch betätigbare Einrichtungen vorgesehen sind, die zusammenwirkende Begrenzungsmittel an dem Körper und an der Treibeinrichtung zur Begrenzung der Bewegung des Treibkolbens von seiner äußeren Lage aufweisen.

13. Vorrichtung nach einem der vorhergehenden Ansprüche, dadurch gekennzeichnet, daß die Arbeitsflüssigkeit im Behälter mittels einer Einrichtung unter Druck gehalten ist.

14. Vorrichtung nach einem der vorhergehenden Ansprüche, dadurch gekennzeichnet, daß die Einrichtung, welche die Arbeits-

Koki Holdings America Ltd.
Ex. 1002, p. 97

flüssigkeit im Behälter unter Druck hält, einen im Behälter beweglichen Kolben und eine Einrichtung zur Verschiebung des Kolbens in eine Stellung aufweist, in der die Flüssigkeit unter Druck gehalten ist.

15. Vorrichtung nach einem der vorhergehenden Ansprüche, dadurch gekennzeichnet, daß die Einrichtung zur Verschiebung des Kolbens (150) im Behälter (104,98) eine Verbindung zwischen der Kammer (85) und dem Behälter aufweist, wodurch der Druck des Druckgases in der Kammer (85) dem Kolben im Behälter (98) zugeführt wird.

16. Vorrichtung nach einem der vorhergehenden Ansprüche, dadurch gekennzeichnet, daß die Flächen des Speicherkolbens und des Treibkolbens, die dem Druck des Druckgases ausgesetzt sind, und die Flächen des Speicherkolbens und des Behälterkolbens, die dem Arbeitsmedium ausgesetzt sind, in bezug aufeinander derart bemessen sind, daß eine im wesentlichen gleichförmige Belastung der Pumpeinrichtung während des Arbeitszeitraumes derselben innerhalb eines Arbeitsganges erzielt ist.

17. Vorrichtung nach einem der vorhergehenden Ansprüche, dadurch gekennzeichnet, daß die vorbestimmte Fläche des Treibkolbens dem Druck des Arbeitsmediums ausgesetzt ist, sobald der Treibkolben in eine vorbestimmte zurückgezogene Stellung bewegt worden ist, wodurch die Druckeinrichtung wirksam wird, um den Treibkolben von seiner zurückgezogenen Stellung in die vorgeschobene Stellung zu bewegen.

Koki Holdings America Ltd.
Ex. 1002, p. 98

Leerseite

87a, 18
~~87b 2-13~~ 15 03 164 O.T: 19.3.1970
41
1503164

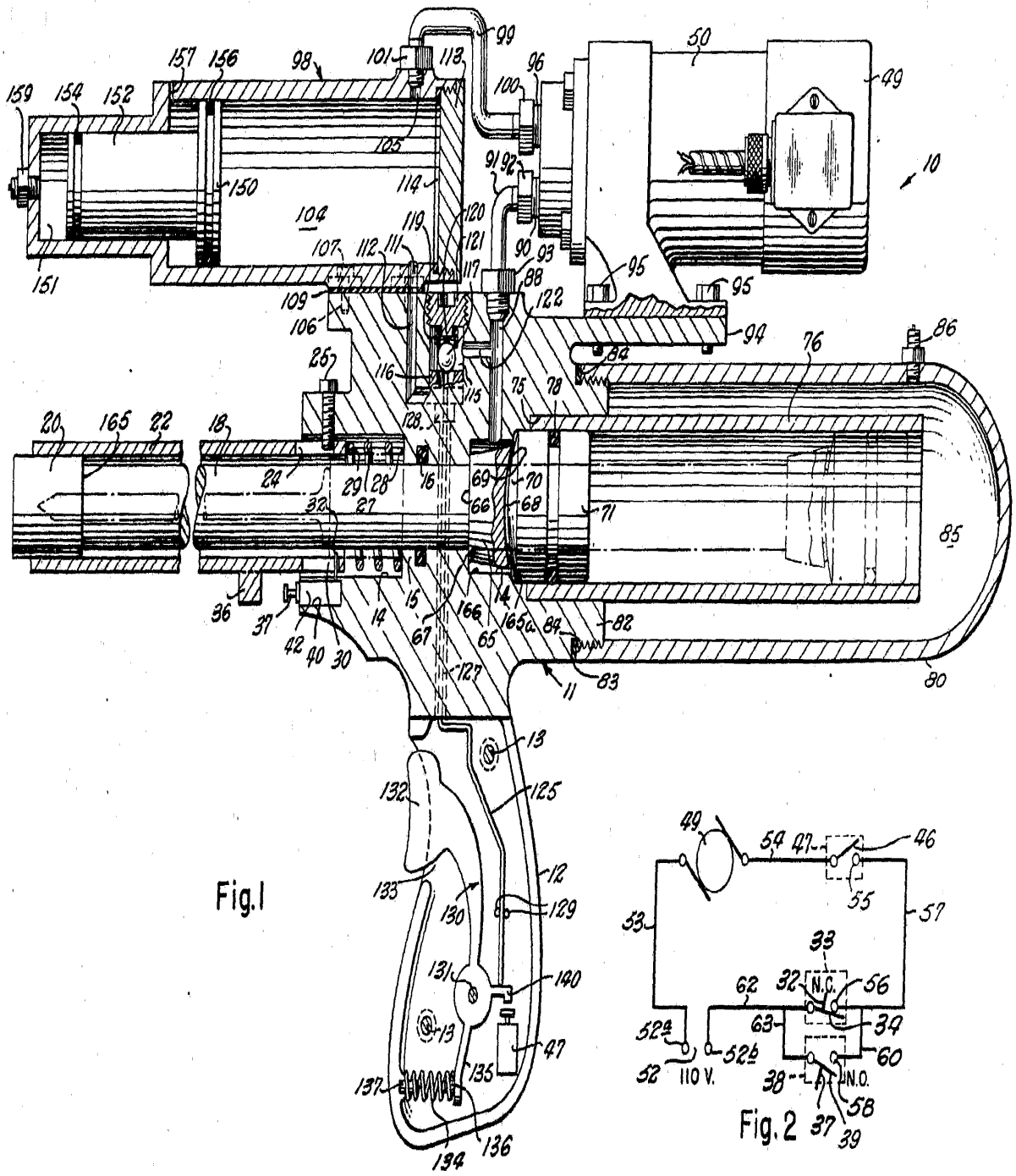

Fig.1

Fig.2

009812/0346 ORIGINAL INSPECTED

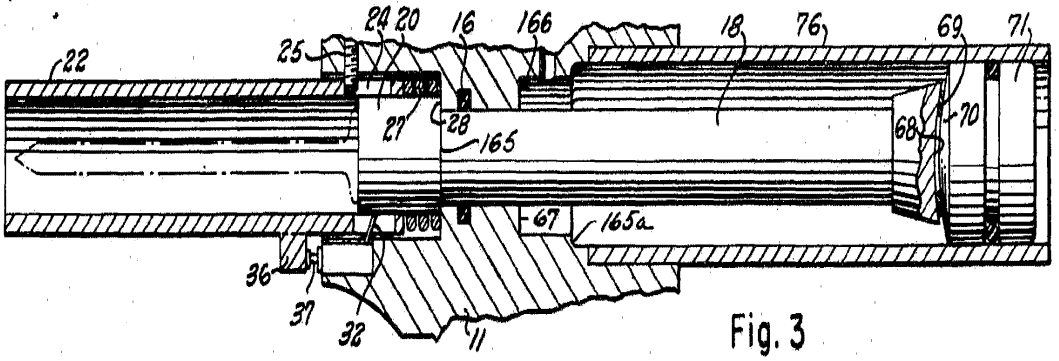

Fig. 3

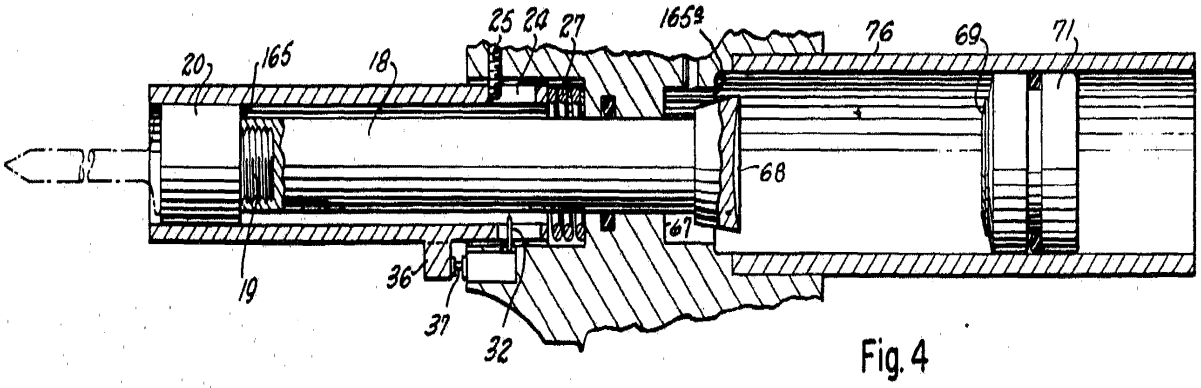

Fig. 4

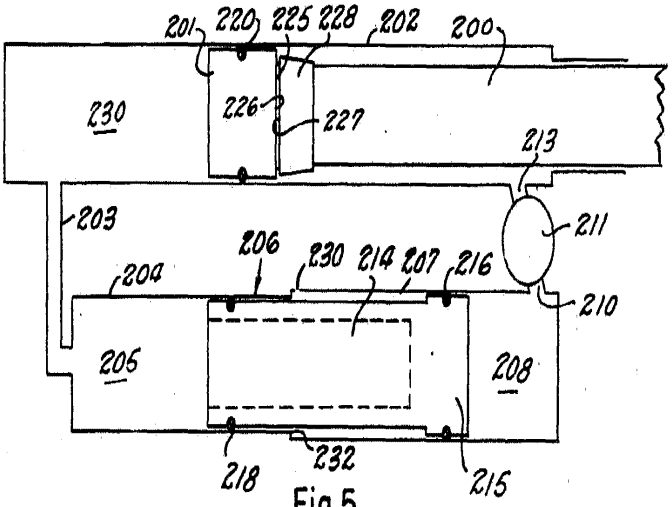

Fig.5

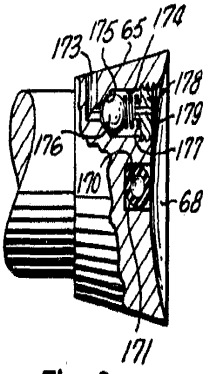

Fig. 6

00981 2/03346

1503164

Int. Cl.: B25d

FEDERAL REPUBLIC OF GERMANY

GERMAN PATENT OFFICE

German Cl.: 87a, 18

PATENT APPLICATION 1503 164

File number: P 1503 164.8(G 41619)

Date of application: 25 September 1964

Date Laid Open for Inspection: 19 March 1970

Exhibition priority:

Convention priority:

Date:

Country:

File number:

Title: Drive Device

Addition to: -

Division from: -

Applicant: General Wire Overseas Corp., Saint Louis, Mo. (V. St. A.)

Representative: Licht, Dipl.-Ing. M.; Schmidt, Dr. R.;

Hansman, Dipl.-Wirtsch.-Ing. A.; Hermann, Dipl.-Phys. S.;
Patent Attorneys, 8000 Munich and 7603 Oppenau

Named as inventor: Haley, Emmett Leeland, Dallas, TX (U.S.A.)

Notification in accordance with Article 7, § 1 par. 2 No. 1 of the Law of 4 September 1967 (BGBl. I, page 960): 2 January 1969

PATENT ATTORNEYS

PATENT ATTORNEYS LICHT, HANSMAN, HERRMANN 8 MUNICH 2
THERESIENSTRASSE 33

Dipl.-Ing. MARTIN LICHT Dr. REINHOLD SCHMIDT Dipl.-Wirtsch.-Ing.
AXEL HANSMAN Dipl.-Phys. SEBASTIAN HERMANN

Munich 25 September 1964

Your Ref. Our Ref.

-/HM

Dr. Expl.

1503164

GENERAL WIRE OVERSEAS CORPORATION

Saint Louis / Missouri

407 North 8th Street

U.S.A.

Drive Device

009812 / 0346

The invention concerns drive devices, in particular a drive device that uses a pressure medium for the operation of hand tools.

One objective of the invention is to provide a new and improved drive device that uses a pressure medium for the operation of hand tools.

A further objective of the invention is to develop a drive device of said type for the operation of hand tools which includes a container for stored energy and a mechanism for the automatic release of the energy to operate a selected tool.

A further element of the invention is a new and improved drive device which features an energy storing mechanism in which a compressible medium, for example, gas, is held under pressure and is used to set a non-compressible driving medium into motion, which in turn activates a drive device, for example the driving piston or hammer of a tool.

A further element of the invention is the development of a new and improved drive device, which features an energy storing mechanism in which a compressible medium is held under pressure, an energy storing piston and a driving piston which can be moved at the same time into a retracted or tensed position by introducing a non-compressible working medium into a cylinder in which the pistons can be moved back and forth, wherein the working medium acts on exposed surfaces of the drive piston in order to move it together with the energy storing piston until it has reached its fully tensed position, whereupon the further

Koki Holdings America Ltd.
Ex. 1002, p. 104

movement of the energy storing piston exposes additional surfaces of the drive piston to the pressure of the working medium, whereupon the compressible medium, which acts by means of the working medium, communicates a driving movement to the driving piston.

A further element of the invention is the development of a new and improved drive device for the operation of hand tools, which features a driving piston that can be moved into its fully tensed or retracted position by introducing a non-compressible working medium into a cylinder, and can be automatically released for working or driving movement in the direction opposite its fully extended position by the continued introduction of working medium into a cylinder of this type, this working movement of the driving piston being exerted by the force of a compressed gas, which acts via an energy storing piston on the working medium in a cylinder of this type.

A further element of the invention is the development of a working device of the described type which is fully operational only when it is brought into a suitable position relative to a work piece or a structure to be machined, wherein the device is equipped with a shutdown device for the pump in case the working device is not brought into a favorable working position before the drive piston reaches its fully tensed position.

A further element of the invention is the development of a working device of the described type in which the drive piston and the body feature interacting mechanisms for slowing down or

Koki Holdings America Ltd.
Ex. 1002, p. 105

limiting the movement of the driving piston when it reaches its fully extended position, in order to prevent it from impacting the body.

Further features and advantages of the invention are described below in line with embodiments of the invention and with reference to the drawings.

Fig.1 shows a partial sectional view of a drive device in accordance with the invention, in which the drive piston and the energy storing piston are shown in their original positions prior to the start of operation of the working device.

Fig.2 shows the circuit diagram of the electrical control circuit of the drive device;

Fig.3 a partial section which shows the drive piston and the storing piston in their fully retracted or tensed positions;

Fig.4 a similar section to that of fig.3, but with the drive piston and the storing piston shown near the end of the driving stroke of the driving piston;

Fig.5 a schematic illustration of another embodiment of a working device according to the invention and

Fig.6 a partial section of a modified version of the drive piston.

Koki Holdings America Ltd.
Ex. 1002, p. 106

In the embodiment according to figures 1 to 4 of the drawing, the working device 10 has a body 11, which has a hollow handle 12 in the form of a pistol grip which can be closed off on its open side with a side plate, not illustrated, which is fastened by means of bolts or screws 13. The body 11 is equipped with a main bore 14, which stretches substantially perpendicular to the handle 12 and features an inner annular flange 15 which is equipped with an inner annular groove, in which a with a gasket (O-ring) 16 or some other sealing means is positioned, producing the seal between the body and the drive piston 18. The front part of the drive piston features a threaded bore in which the narrowed part 19 of an annular hammer head 20 extends. The front part of the drive piston 18 extends through a guide tube 22, the rear portion of which extends slidingly into the main bore 14 and features a lengthwise slot 24 into which the lower part of a stop bolt 25, screwed into a borehole of the body 11, engages. It is obvious that the stop bolt 25 restricts the inward and outward movement of the guide tube in the main bore 14 of the body 11 by touching the surfaces of the guide tube 22 which form the opposite ends of the slot 24. The tube 22 is forced outward into the outermost position illustrated in fig. 1 by means of a spring 27, the spring encompassing the driving piston 18 and having one end resting on the annular shoulder 28 formed by the inner flange 15, with the other end resting on an annular interior end surface 29 of the guide tube 22.

The guide tube 22 features a second longitudinal slot 30 through which an actuating arm 32 of a switch 33 extends inwardly

Koki Holdings America Ltd.
Ex. 1002, p. 107

into the guide tube. The switch 33, which is normally closed, features a contact 34 which is activated each time the actuating arm 32 is touched by the hammer head 20 to open the shoulder when the pistons and the hammer head are retracted inward. The guide tube 22 additionally features an external projection 36 which comes in contact with an actuating arm 37 of a normally open switch 38 to move the contact 39 of the same into the closed position. The switches 33 and 38 can be arranged in the same housing 40 which is fixed in a recess 42 of the body 11 directly beneath the main bore 14 and in direct connection with said bore. It is clear that with the inward movement of the driving piston 18 from the position shown in fig.1 to its retracted or tensed position shown in fig.3, the normally closed switch 33 is first opened and is held open until the driving piston is in its substantially fully retracted position, and that the normally open switch 38 is closed when the guide tube 22 is moved into its fully retracted position.

The contacts 34 and 39 of switches 33 and 38, respectively are parallel with one another and are connected in series to the movable contact 46 of a trigger switch 47, located in the handle 12, and to a pump motor 49, which drives a pump 50. The pump motor 49 is connected on one side by means of a lead 53 to a terminal 52a of the power supply 52 and is connected on the other side by means of a lead 54 to the movable contact 46 of the switch 47. The fixed contact 55 of the trigger switch 47 is connected to a fixed contact 56 of the normally closed switch 33 via the lead 57 and is connected to a closed contact 58 of the

Koki Holdings America Ltd.
Ex. 1002, p. 108

normally open switch 38 via the leads 57 and 60. The movable contact 34 of the normally closed switch 33 is connected to the other terminal 52b of the power supply 52 by means of a lead 62, while the movable contact 39 of the normally open switch 38 is connected to the other terminal 52b of the power supply by means of leads 62 and 63. It is clear that the motor 49 is always connected to the power supply 53 and is therefore always supplied with power when the trigger switch 47 and one of the switches 33 and 38 are closed.

The inside end of the driving piston 18 is equipped with a annular, conically tapered head 65 which has an annular surface or shoulder 66 which comes in contact with the annular shoulder 67 of the annular flange 15 of the body 11 to restrict the outward movement of the driving piston. The end surface or the upper surface 68 of the head 65 is substantially concave and forms a seat for the annular sealing element 69 which is secured in suitable manner, for instance by cementing, onto a convex surface 70 of an energy storing piston 71. The region of the surface 68 of the piston head that is sealed by the annular sealing element 69 is larger than the cross-section of the driving piston 18 at the sealing element 16, so that when the sealing element 69 forms a seal between the energy storing piston 71 and the driving piston head 65, any fluid pressure that acts on the driving piston will act to move the piston head toward the energy storing piston and keep it in close contact with the same. Corresponding thereto, the pressure of the medium that is introduced into the bore 14 of the body 11 between the inner

Koki Holdings America Ltd.
Ex. 1002, p. 109

flange 15 and the energy storing piston 71 when the storing piston 71 and the driving piston 18 are in the positions shown in fig.1 acts to force the driving piston head into contact with the energy storing piston and to move the driving piston toward the right in fig. 1.

The main bore 14 of the body 11 is enlarged at 75 to accommodate an expansion cylinder 76, which is closely fixed to the body 11 in a suitable manner, for example, by welding. The storing piston 71 is movable inside the cylinder length and features an external annular groove in which a gasket (O-ring) 78 or some other sealing means is arranged to produce the seal between the cylinder circumference and the piston.

An elongated energy storing shell is screwed onto the rear extension 82 of the body 11 and a sealing means or a gasket 83 is inserted between an annular shoulder 84 of the body and the annular end of the shell 80 to produce a medium-proof seal. Gas which is held under pressure can be introduced via a suitable valve 86 into the energy storage or pressurized gas chamber 85 which is formed by the storing shell 80. When the chamber 85 is filled with pressurized gas, the storing piston 71 is forced to the left, as shown in fig.1, and acts to hold the driving piston 18 in the position shown in fig.1, in which the gasket 69 forms a seal between the surfaces 68 of the driving piston head 65 and the surface 70 of the storing piston.

The non-compressible medium is introduced into the main bore 14 between the shoulder 67 of the inner flange 15 of the body 11

Koki Holdings America Ltd.
Ex. 1002, p. 110

and the storing piston 71 through a channel 88 in the body, said channel connecting the main bore to the outlet 90 of the pump by means of the tubing 91, the two ends of which are connected to the body and to the pump outlet by means of fittings 92 and 93, respectively. The pump 50 and its drive motor 49 are attached to a mounting arm 94 of the body 11, for example, by means of bolts 95 which are extended into threaded bores in the mounting arm. The pump inlet 96 is connected to a container 98 via a pipeline 99, the ends of which are connected to the pump inlet and the container by means of fittings 100 and 101, respectively. The pipeline 99 is connected to the large chamber 104 of the reservoir 98 via the outlet opening 105. The container 98 is secured to the body 11, for example, by means of bolts 106, which are extended through lateral extensions 107 of the container into threaded bores in the body 11. A sealing means 109 is inserted between the container 98 and the upper surface of the body 11 to produce a medium-proof seal around the inlet opening 111 of the container and the bypass channel 112. The inlet opening 111 leads into the large chamber 104 of the container 98 near the end of said chamber that is sealed by the cap 113, which is screwed into the open end of the container, wherein a sealing ring 114 produces a medium-proof seal. The bypass channel 112 leads into the lower end of a valve chamber 115 below a ring seat 116, which is arranged in the body 11 to form a seat for the ball valve 117. The ball valve ball 117 is pressed against the valve seat 116 by means of a spring 119, the lower end portion of which touches the ball valve ball and the upper portion of which is pushed onto an

Koki Holdings America Ltd.
Ex. 1002, p. 111

upwardly directed projection 120 of a screw bit 121 which seals off the upper end of the valve chamber 115. A channel 122 forms the connection between the valve chamber 115 and the channel 88. It is clear that the pressure of the medium that is pumped through the channel 88 acts to hold the ball valve 117 in its closed position on the ring seat 116, thereby preventing a flow of medium between the bypass channel 112 and the channel 88.

The ball valve 117 is normally held in an open position by means of a rod 125, which is extended upward through the body 11 into the valve chamber 115 and through the ring seat 116 by means of a channel 127 located in the body, and touches the ball valve ball 117. A gasket (O-ring) 128 or the like is arranged in the channel 127 to produce a seal between the actuating rod 125 and the body 11. The lower end of the rod 125 is extended into the hollow handle 12. The actuating rod 125 is mounted and held in its position by means of guide bolts 129, the guide bolts being arranged eccentrically in relation to the handle so as to keep a release lever 130 freely moveable. The latter is rotatably mounted between its ends at 131 with the pivot pin being secured to the handle 12. The release lever has a piece 132 intended for the actuating finger, said piece extending outward through a slot 133 in the handle. The release lever is preloaded by means of a spring 134, the ends of which press against a wall of the handle and against the lower end 135 of the trigger, to achieve a counterclockwise movement around the pivot pin of said release lever. The release lever and the handle are equipped with spring

Koki Holdings America Ltd.
Ex. 1002, p. 112

retaining bolts 136 and 137, respectively which extend into the opposite ends of the spring.

The release lever features an arm 140 which can come into contact with the lower end of the actuating rod 125 in order to hold said rod in its raised position, thereby keeping the ball valve ball 117 separated from the ring seat 116. In addition, the arm 140 of the release lever 47 makes contact with the trigger switch and closes it when the release lever is pivoted clockwise against the resistance of the spring 134, which occurs when the user presses the finger piece 132 of the release lever in the handle inward. Such a movement of the release lever in the clockwise direction effects a downward movement of the actuating rod 125 as a result of gravity and also as a result of the force of the valve spring 119. When the user decreases the force being exerted on the finger piece 32, the force of the spring 134 rotates the release lever counterclockwise, thereby opening the normally open switch 47 and immediately thereafter effecting the upward movement of the actuating rod 125 to open the ball valve 117.

The non-compressible working medium in the large chamber 104 of the container 98 is held at a predetermined pressure by means of a piston 150, wherein the piston is pushed inward by a filling of compressed gas contained in a small chamber 151 of the container and acts against the end of the recessed piston shaft 152. The recessed piston shaft 152 is equipped with an annular groove in which a gasket (O-ring) 154 is arranged to produce a seal between the piston shaft and the cylindrical inner wall of

Koki Holdings America Ltd.
Ex. 1002, p. 113

the container, which delimits the small chamber 151. The piston is in turn provided similarly with an outer annular recess, in which a gasket (O-ring) 156 or the like is placed, forming a seal between the piston and the cylindrical inner wall which delimits the large chamber 104 of the container. A ventilation opening 157 is arranged at the end of the large chamber 104 that is opposite the openings 105 and 111 to enable the intake and outlet of air behind the piston 150 when the piston is moved back and forth in the container 98. A gas shutoff device 159 is provided, though which pressurized gas can be introduced into the small chamber 151 behind the piston shaft 152.

It is clear that the piston 150 of the container 98 holds the non-compressible working medium in the large chamber 104 of the container at a predetermined pressure and that the piston 150 is moved toward the sealing cap 113 when the non-compressible working medium is pumped out of the chamber into the main bore 14 of the body 11 to effect the movement of the storing piston 71 and of the driving piston 18 counter to their retracted or tensed position.

The circumstance that the working medium in container 98 is held at a predetermined pressure reduces the load on the pump 50, which pumps the working medium out of the large chamber 104 of the container into the main bore 14 of the body 11 against the pressure that is exerted on the storing piston 71 by the compressed gas contained in chamber 85.

Koki Holdings America Ltd.
Ex. 1002, p. 114

The normal idle position of the storing piston 71 and of the driving piston 18 are shown in fig.1, in which the shoulder 66 of the head 65 of the driving piston touches the annular shoulder 67 of the inner flange 15 of body 11, which thereby restricts the outward movement of the driving piston, and in which the storing piston 71 is pressed against the head 65 by the force of the compressed gas in the chamber 85. The storing piston seal 69 then prevents the formation of fluid pressure across the entire cross-section of the surface 68 of the head 65.

When work, such as driving a nail, for example, will be carried out by means of the drive device, the release lever 130 is pivoted clockwise around its pivot pin 131 by pressing the finger piece 132 inward. This movement of the release lever causes the rod 125 to move upward and allows the movement of the ball valve ball 117 into its closed position. The completion of the movement of the actuating lever 130 closes the trigger switch 147 and connects the motor 49 to the power supply 52 that supplies energy to the motor, since the normally closed switch 33 is now in its closed position because its actuating arm 32 is not in contact with the head 20. The working medium is thereby pumped by means of the pump 50 out of the large chamber 104 of the container 98 into the channel 88 of the body 11, and ultimately into the main bore 14 between the annular flange 67 and the storing piston 71. Since the ball valve 117 is now in a closed position, no working medium can flow back from the channel 88 through the bypass channel 112 into the large chamber 104. When the working medium is pumped into the main bore 14 of the body

Koki Holdings America Ltd.
Ex. 1002, p. 115

11, it causes the storing piston 71 and the driving piston 18 to move toward the right as indicated by the dotted-dashed lines in fig.1. The driving piston 18 is therefore caused to move to the right together with the storing piston 71 because, as has already been described, the region of the surface 68 that is sealed by the sealing means 69 is larger than the cross-sectional surface of the piston 18 at the seal 16, so that the pressure of the medium acting on the driving piston acts to press the driving piston toward the storing piston. The continued introduction of working medium into the main bore 14 forces the storing piston 71 and the driving piston 18 to move into their fully retracted positions, as shown in fig.3, against the pressure exerted by the pressurized gas in the energy storage device or energy chamber 85. The driving piston and the storing head move toward the right until the rear edge or the shoulder 165 of the hammer head 20 of the driving piston 18 touches the actuating arm 32 of the normally closed switch 33. If the guide tube 22 has not been moved inward into the position shown in fig.3 and 4 by this time, then the opening of the switch 33 will cause the motor 49 to be cut off from the power supply circuit and the movement of the driving piston and of the storing piston is stopped. When the front end of the guide tube 22 is then pressed against the work piece or building element into which the nail is to be driven and the drive device is moved forward so that the rear part of the guide tube is pushed into the main bore 14, the external projection 36 contacts the actuating arm 37 of the normally open switch 38 and closes said switch, so that the motor 49 is in turn

Koki Holdings America Ltd.
Ex. 1002, p. 116

connected to the input power circuit 52. The pump 50 then begins to pump medium into the main bore 14 again, causing the driving piston 18 and the storing piston 71 to move further toward the right until such further movement of the driving piston is prevented by the shoulder 165 of its hammer head 20 touching the annular shoulder 28 of the inner flange 15. At that time the driving piston 18 is in its fully retracted or tensed position. In contrast, the storing piston 71 is free to continue such movement if the pumping of the working medium is continued. Immediately after such a movement of the storing piston 71 relative to the now stationary driving piston 18, the seal between the surfaces 68 and 70 of the driving piston head 65 and the storing piston 71, respectively is nullified. The pressure of the working medium is then exerted on the entire cross-sectional area of the concave surface 68 of the driving piston head 65, and as a consequence of this circumstance, the driving piston is moved to the left forcefully and at high velocity as a result of the pressure exerted by the pressurized gas of the working medium in the main bore and in the expansion cylinder 76. The storing piston moves behind and follows the driving piston, however since it extends across the entire cross-section of the expansion cylinder 76 bore, it moves at a lower velocity than the driving piston. A movement of this kind by the driving piston 18 will obviously drive the nail into the work piece or building structure. Since the end of the head 65 is shaped as a truncated cone, the head acts to enclose working medium into the diminished annular space between the annular shoulders 67 and 165a when the

Koki Holdings America Ltd.
Ex. 1002, p. 117

head 65 reaches the annular flange 15, because the annular space between the head and the inner edge of the shoulder 165a is diminished when the head is moved behind the shoulder 67 toward the shoulder 165a. The diameter of the annular surface 166 is smaller than the diameter of the expansion cylinder. As a result, this enclosure of working fluid slows the driving piston 18 when it reaches the end of its working stroke, and reduces the impact of the shoulder 66 of the head 65 when it comes in contact with the shoulder 67 of the annular flange 15. The storing piston 71 is then held at a distance from the driving piston 18 due to the presence of additional working medium which has been pumped by the pump 50 into the main bore and into the expansion cylinder. Of course, the pump 50 can continue pumping during the working or driving stroke of the driving piston, but the movement of the driving piston is effected primarily by the force exerted by the pressurized gas in the chamber 85, which is transmitted by the storing piston 71 to the working medium.

Once the nail has been driven into the workpiece or building, the user releases the actuating lever 130 to allow it to move in a counterclockwise direction by virtue of the force exerted by the spring 134, thereby shutting off the motor 49 and raising the actuating rod 125 to open the ball valve.

The working medium in front of the storing piston 71 is then forced by the pressure of the pressurized gas in the chamber 85 to move through the channel 88, the channel 122, the valve chamber 115 and the bypass channel 112 into the large chamber 104, since the force exerted on the piston 152 by the pressurized

Koki Holdings America Ltd.
Ex. 1002, p. 118

gas in the chamber 151 on the working medium in the chamber 104 is lower than the force exerted by the pressurized gas on the working medium in the main bore in front of the storing piston 71. As a result, the storing piston moves to the left until its seal 62 again touches the surface 68 of the head 65 of the driving piston 18 and again produces a seal between the pre-specified area of the surfaces 68 and 70 of the head 65 and the piston 71, respectively. The drive device is then ready for a new work cycle.

It is clear that the illustrated and described working device performs the work as a result of the expansion of the pressurized gas in the energy storage device and in the gas chamber 85, since the gas that is introduced into the gas chamber 85 can already have a relatively high pressure value, for example, 70 atmosphere, and the further pressurization of the gas in the chamber 85 caused by the movement of the storing piston 71 in the expansion cylinder 76 by means of the non-compressible working fluid causes the working medium to take on an even higher pressure value, for example, 140 atmosphere, and as a result, the energy stored in this manner in the pressurized gas is used to activate the driving piston 18 to execute functions such as driving a nail, for example.

It should further be noted that the driving piston 18 can be actuated or released without the use of any valves or other devices as described in US patent specification No. 2 867 086, for example, which are predisposed to damage or malfunction, since the completion of the movement of the driving piston, when

Koki Holdings America Ltd.
Ex. 1002, p. 119

it is in its fully retracted or tensed position, and the continued movement of the storing piston in the embodiment according to the invention automatically cause the driving piston to be moved to its fully extended position, wherein the driving piston performs work during said driving movement or during this stroke.

If desired, the bypass channel 112, the ball valve 117 and the actuating rod 125 thereof may be omitted, in which case the working medium is returned to the container 98 from the main bore 14 of the body 11 by means of the pump 50, which is thereby caused to rotate in the opposite direction, when the pump forces the working medium into the large chamber 104 by virtue of the pressure of the pressurized gas in the chamber 85, which acts on the storing piston 71.

If desired, the chamber 85 for the pressurized gas may be connected via an appropriate flow channel or pipeline to the small chamber 151 of the container 98, so that the pressure of the pressurized gas can be used by the energy storage chamber or the pressurized gas chamber 85 to preload the container piston 150.

Although an elastic sealing element 69 for producing the seal between the opposing surfaces 68 and 70 of the driving piston head and the storing piston, respectively, has been described and illustrated, one of these surfaces can instead be equipped with an annular flange which touches the other surface in order to form a metallic seal. If the elastic sealing element

Koki Holdings America Ltd.
Ex. 1002, p. 120

69 is a type of gasket (O-ring) that must be bent or deformed inward to produce a secure seal between the surfaces, the piston head 65 can be equipped with a recess 170, as shown in fig.6, into which an elastic member can be inserted, which has an air pocket, for example a sphere 171 made of rubber, plastic or the like, or a sponge, for example, the pores or openings of which contain air, so that the pressurization of the gas contained in a sphere of this type or in the pores of a sponge of this type allows such a deformation of the sealing element 69. The working medium enclosed between the surfaces in a sealing element of this type naturally does not allow such an inward deformation or bending of the gasket, since it is not compressible.

It is clear that the working device 10 has a body which features a bore 14 in which a driving piston 18 can move back and forth and that the piston features an end that can be displaced outward out of the bore, that the body has devices that contain the section of the bore between the shoulders 67 and 165a of the body and the cylinder projection 76, which forms a cylinder, that the opposite end of the driving piston extends into the cylinder of this type and finally, that a storing piston 71 is arranged so as to move within this cylinder and that the pressurized air in the chamber 85 formed by the body and the energy storing shell is a feature for pressing the storing piston toward the driving piston.

Further, it is clear that the storing piston, when in contact with the driving piston, seals a pre-specified area of the driving piston against the pressure of the working medium,

Koki Holdings America Ltd.
Ex. 1002, p. 121

which is introduced into the cylinder by means of a suitable device, for example the pump 50, and that the body and the driving piston have respective devices 66 and 67 that come into contact with one another in order to restrict the movement of the driving piston, so that the continued movement of the storing piston once the movement of the driving piston has been stopped by the restricting devices causes the storing piston to be separated from the driving piston in order to expose the pre-specified area of the driving piston to the pressure of the working medium so that the pressure device, which operates by means of the storing piston and the working medium, is activated so as to move the driving piston out if its retracted position into its outer position.

It is also clear that the driving piston 18 features a head 65 which works together with the recessed part of a cylinder of this type, said part being formed by the annular surface 166, to form a resilient or shock absorbing means for decelerating the movement of the driving piston when it reaches the outer limit of movement to its outer position.

It is also clear that the device for introducing non-compressible working medium and the pressure in the cylinder for moving the driving piston and the storing piston into their retracted positions includes a pump 50 which is driven by a motor 49, and that the operation of the motor is controlled by the switches 33 and 38, which are can be actuated by means of the guide tube 22 in order to guarantee that the front end of the guide tube must be pressed against the structure into which the

Koki Holdings America Ltd.
Ex. 1002, p. 122

nail is to be driven before the driving piston is released for its working or driving movement or its stroke.

It is also clear that a shunt path is provided to allow the working medium to move out of the cylinder into a container during the completion of an operating cycle of the device, and that the piston 150 is provided to keep the working medium in the container at a pre-specified pressure in order reduce the load on the pump.

The driving piston head 65 may also be equipped with a channel 173 which ends at the side of the head and leads longitudinally into a valve chamber 174, as shown in fig. 6. A conical surface 175 of the piston head forms a seat for the ball valve 176 which is pressed against the seat by a spring 177. One end of this spring rests on the ball valve ball and the other end rests on the inner surface of an insert 178, which is screwed into the bore in the head that forms the valve chamber. The force with which the ball valve ball is held in position on the valve seat can be adjusted by turning the insert 178. Said insert has a channel 179 which allows working medium held under pressure to enter through the channel 173 and travel to the surface 68 of the piston head within the seal 68 when the ball valve is open.

It is clear that, if the piston head is equipped with the channel 173 and the ball valve 175, the pressure exerted by the spring 177 on the ball valve ball must be adjusted so that the ball valve is moved to its open position by the pressure exerted by the working medium when the driving piston and the storing

Koki Holdings America Ltd.
Ex. 1002, p. 123

piston reach their tensed positions, in order to allow the pressure of the working medium to be applied to the entire area of its surface 65 and to allow the driving piston to subsequently be moved into its outermost position. In this case, the tensed position can be the position reached by the driving piston shortly before the shoulder 165 of the hammer head 20 comes in contact with the annular shoulder 28 of the inner flange 15, so that the hammer head never reaches the annular shoulder. This type of operation therefore prevents the impact and vibration that would otherwise result from a contact of this kind with the drive device.

It is clear that the channel 173 and the ball valve of the head form a means for applying the pressure of the working medium to the surface of the driving piston when said piston reaches a pre-specified tensed position, in the same way that the shoulder 28 and shoulder 165 of the annular flange 15 and the hammer head, respectively, form such means.

If desired, the ball valve can also be pressed against its seat with such force that it remains closed until the hammer head touches the shoulder 28 and the movement of the driving piston is thereby stopped. The subsequent sudden pressure increase in the cylinder and the pressure decrease between the surfaces 68 and 70 resulting from the separation of the storing piston from the driving piston then cause the ball valve ball to move into its open position before the pressure increases to such a level that the sealing element 69 might break. Since in each of these types of operation of the ball valve, the seal is not forcefully lifted

Koki Holdings America Ltd.
Ex. 1002, p. 124

and is not subjected to the relatively large differences in pressure, which would otherwise be necessary for a forceful removal of seal tightness, the lifespan of the sealing element is extended.

In fig.5, a schematic and modified version of the drive device is illustrated, the driving pistons 200 and the storing piston 201 of which are arranged slidingly in a cylinder 202, one end of which is connected by means of a pipeline 203 to a tapered section 204 of a cylinder 206 which forms a gas chamber 205 having a small diameter, and the expanded section 207 of which forms the large container chamber 208 in which the non-compressible working medium is contained. The inlet 210 of the pump 211 is connected to the container chamber 208 for the working medium, while its outlet 213 is connected to the cylinder 202 at the end of said cylinder that is opposite the end which is connected via the pipeline 203 to the cylinder 202. One piston 214 features an enlarged head 215 which is arranged in the larger section 207 of the cylinder 206. The head 215 is equipped with a gasket (O-ring) or some other sealing means for producing the seal between the head and the cylinder. The piston 214 is provided with a sealing element 218, for example, a gasket (O-ring), at its end which is opposite the enlarged head 215, which sealing element produces the seal between the piston and the tapered section 204 of the cylinder.

The storing piston 201 is provided with a sealing element 220 that acts between the cylinder 202 and the storing piston. An appropriate sealing element 225, which has the same structure and

Koki Holdings America Ltd.
Ex. 1002, p. 125

the same function as the sealing element 69 of the embodiment shown in fig.1, produces the seal between the surface 226 of the storing piston 201 and the surface 227 of the head 228 of the driving piston.

As shown in fig.5, a ventilation opening 230 of the cylinder 207 allows the intake and outlet of air out of the cylinder between the shoulder 232 and the enlarged head 215. The pump 211 functions in the same manner as the pump 50 to pump non-compressible working medium from the large chamber 208 of the cylinder 206 into the cylinder 202 in order to move the driving piston 200 and the storing piston 201 into their retracted or fully tensed positions, wherein the driving piston is released as soon as its movement has ended, while the movement of the storing piston 201 is continued, so that the driving movement of the driving piston is free for performing work, for example, driving a nail.

Once the driving piston 200 has been moved into its outermost position by the pressure of the pressurized gas, the working medium is returned to the large chamber 208, since the storing piston 201 and the piston 214 have smaller surfaces that are exposed to the pressure of the pressurized gas than the surface of the piston head 215, which is supplied with working medium by the pump 211 during the completion of a working stroke of the driving piston 200, until the storing piston 201 is once again touching the sealing element 225 of the driving piston head 228. The motor that drives the pump 211 may also feature reversible rotational directions and may be driven by a motor

Koki Holdings America Ltd.
Ex. 1002, p. 126

which likewise features reversible rotational directions, so that the working medium can be pumped out of the cylinder 202 back into the large chamber 208 of the cylinder 207 as soon as the working stroke of the driving piston 200 is completed.

It is clear that the surfaces of the storing piston 201 and of the piston 214 that are exposed to the pressurized gases in chambers 205 and 230a are substantially the same, but that the surface of the piston head 215 that is exposed to the pressure of the working medium in the container chamber 208 is larger than the same surfaces of the storing piston and the piston 214. Consequently, piston 214 travels a shorter distance than the storing piston 201 when the pump 211 moves a larger amount of working medium out of the container chamber 208 into the cylinder 202, and the volume in the chamber 230a is reduced by a larger amount than the volume is increased in chamber 205. Additionally, the inward movement of the driving piston 200 when working medium is pumped into the cylinder 202 causes a further movement of the storing piston 201, resulting in a further reduction in the volume in chamber 230a as compared with the volume increase in chamber 205. As a result, the gases pressing the storing piston against the driving piston are compressed even further when the driving piston moves toward its fully retracted or tensed position.

It is clear that the diameter of the storing piston 201 can be enlarged in relation to the diameter of the piston 214 or the diameter of the piston head 215 can be decrease in order to minimize such an additional compression of the pressurized gas,

Koki Holdings America Ltd.
Ex. 1002, p. 127

so that the load on the pump throughout the entire working process of the drive device would be substantially uniform.

It is also clear that the work cycle for the activation of the pump can be reversed when the surface of the piston 214 which is exposed to the pressure of the pressurized gas in the chamber 205 is larger than the surface of the piston head 215 which is exposed to the pressure of the working medium in container chamber 208, so that, once the driving piston has been moved to its outermost position, the pump pumps working medium out of the cylinder 202 in order to move the piston 214 to the left against the force exerted by the pressurized gas in the chamber 205 and to move the storing piston to the right, until it touches the driving piston. When the pump is then switched off, the pressurized gas acting on the piston 214 moves both the driving piston and the storing piston toward the left, to their fully retracted or tensed position, and when the full surface 227 of the head 228 of the driving piston is exposed to the working medium in the manner described above, the driving piston is moved toward the right. The pump is then switched on to again pump working medium out of the cylinder 202 into the container chamber 208, so that the work cycle of the drive device can be repeated.

Further, as is clear, the working medium in the container can be held at a pre-specified pressure by means of a piston in the chamber, wherein the piston can be preloaded with the pressure of the pressurized gas in the compressed gas chamber by means of a device such as a pipeline that connects chambers 85 and 151, or pipeline 203 (fig.5) which connects chambers 230a and

Koki Holdings America Ltd.
Ex. 1002, p. 128

205, wherein the surfaces of the storing piston and the container piston that are exposed to the pressures of the compressed gas and the working medium, must be in such relative ratio to one another that they achieve a desired load on the pump. In many cases it is advantageous to provide a substantially constant load on the pump, which is achieved when the relative dimensions of the surfaces are such that they achieve a desired minimal additional pressure on the pressurized gas during the pumping phase of the activation sequence of the pump.

The above description of the invention is merely an example, and specifically identified design features may be substituted without deviating from the concept of the invention.

Koki Holdings America Ltd.
Ex. 1002, p. 129

Patent Application: Drive Device

CLAIMS

1. A drive device, characterized in that a body (11) has a bore (14), in which a driving piston (18) can be moved back and forth, said piston being equipped with an end piece that can extend outwardly out of the bore, in that the body has a cylinder into which the opposite end piece of the driving piston extends, in that an energy storing piston (71) can move back and forth in the cylinder, wherein the energy storing piston is pushed by a pressure device toward the driving piston and is placed in contact with the same, and in that a device for introducing a working medium is provided in the cylinder for the purpose of moving the driving piston and the energy storing piston into retracted positions against the force exerted by the pressure device.

2. The device according to claim 1, characterized in that a non-compressible working medium is provided.

3. The device according to claim 1 or 2, characterized in that the energy storing piston (71) shields a pre-specified area of the driving piston (18) against the pressure of the working medium when the energy storing piston is touching the driving piston.

4. The device according to any one of the preceding claims, characterized in that limiting devices that contact one another for limiting the movement of the driving piston (18) are provided

Koki Holdings America Ltd.
Ex. 1002, p. 130

on said driving piston and on the body (11), whereby the continued movement of the storing piston (71), once the movement of the driving piston is prevented by the limiting means, causes the storing piston to be released from the driving piston, whereby the pre-specified area of the driving piston is exposed to the pressure of the working medium and the pressure device is activated in order to move the driving piston from the retracted position into an extended position.

5. The device according to any one of the preceding claims, characterized in that a preferably automatically operated device is provided, which exposes the pre-specified area of the driving piston to the pressure of the working medium when the driving piston is moved into a pre-specified retracted position, whereby the pressure device is activated to move the driving piston from its retracted position into an extended position.

6. The device according to any one of the preceding claims, characterized in that the diameter of the driving piston that is exposed to the working medium is smaller than that of the energy storing piston.

7. The device according to any one of the preceding claims, characterized by the fact that the body (11) features a chamber (85) that is connected to the end of the cylinder that is opposite the cylinder end into which the driving piston (18) extends, wherein the energy storing piston (71) is capable of moving back and forth in the cylinder between the chamber (85) and the driving piston (18).

Koki Holdings America Ltd.
Ex. 1002, p. 131

8. The device according to any one of the preceding claims, characterized in that the chamber (85) serves to hold pressurized gas, which forces the storing piston (71) against the driving piston (18) and keeps it in contact with the same, and in that the device for introducing especially non-compressible working mediums into the cylinder moves the driving piston (18) and the storing piston (71) to the other end of the cylinder against the pressure exerted by the pressurized gas.

9. The device according to any one of the preceding claims, characterized in that the device for introducing the working medium has a container for the working medium and a pump device for moving the medium out of the container into the cylinder.

10. The device according to any one of the preceding claims, characterized in that the body (11) has a guide tube (22), which is mounted so as to move, with limitations, between an initial outer position and a retracted position, in the longitudinal direction of the body, wherein one end of the driving piston (18) extends into the guide tube, in that a device is provided which forces the guide tube into its outer position, in that a first device can be actuated to switch the pump device on, whereas a second device can be actuated by the movement of the driving piston from its outer position to a position just before its inner position, which prevents the actuation of the pump device when the first device is actuated, and in that a third device is provided, dependent on the movement of the guide tube into its rear position, which allows the pump device to be actuated when

Koki Holdings America Ltd.
Ex. 1002, p. 132

the first device is actuated, even if the second device is actuated.

11. The device according to any one of the preceding claims, characterized in that the driving piston is provided with a channel which is connected at one end to the cylinder, at a point that is offset from the pre-specified area, and whose other opening leads into said area, and in that a pressure dependent valve for closing said channel is provided, said valve opening said channel when the pressure of the working medium in the cylinder exceeds a predefined value.

12. The device according to any one of the preceding claims, characterized in that automatically actuable devices are provided, which have feature coactive limiting means on the body and on the driving device for limiting the movement of the driving piston from its outer position.

13. The device according to any one of the preceding claims, characterized in that the working fluid in the container is held under pressure by means of a device.

14. The device according to any one of the preceding claims, characterized in that the device that holds the working fluid in the container under pressure features a piston that is movable in the container and a device for shifting the piston into a position in which the fluid is held under pressure.

15. The device according to any one of the preceding claims, characterised by the fact that the device for shifting the piston

Koki Holdings America Ltd.
Ex. 1002, p. 133

(150) in the container (104, 98) features a connection between the chamber (85) and the container, whereby the pressure of the pressurized gas in the chamber (85) is fed to the piston in the container (98).

16. The device according to any one of the preceding claims, characterized by the fact that the surfaces of the storing piston and the driving piston that are exposed to the pressure of the pressurized gas and the surfaces of the storing piston and the driving piston that are exposed to the working medium are dimensioned relative to one another such that a substantially uniform load on the pump device during the working period of the same is achieved during a work operation.

17. An device according to any one of the preceding claims, characterized by the fact that the pre-specified surface of the driving piston is exposed to the pressure of the working medium as soon as the driving piston has been moved into a pre-specified retracted position, whereby the pressure device is activated to move the driving piston from its retracted position into the extended position.

Koki Holdings America Ltd.
Ex. 1002, p. 134

Blank page

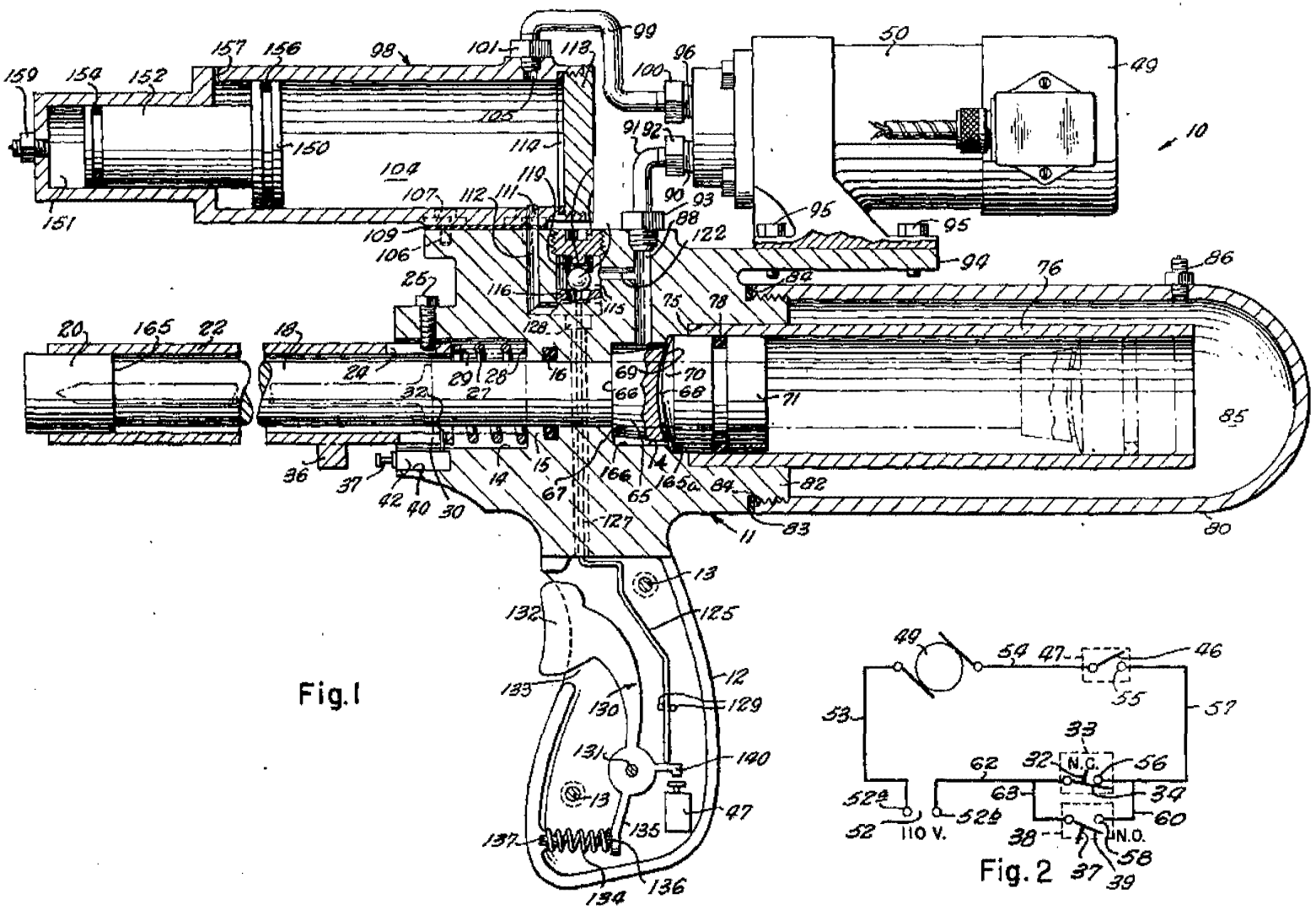

Fig. 1

Fig. 2

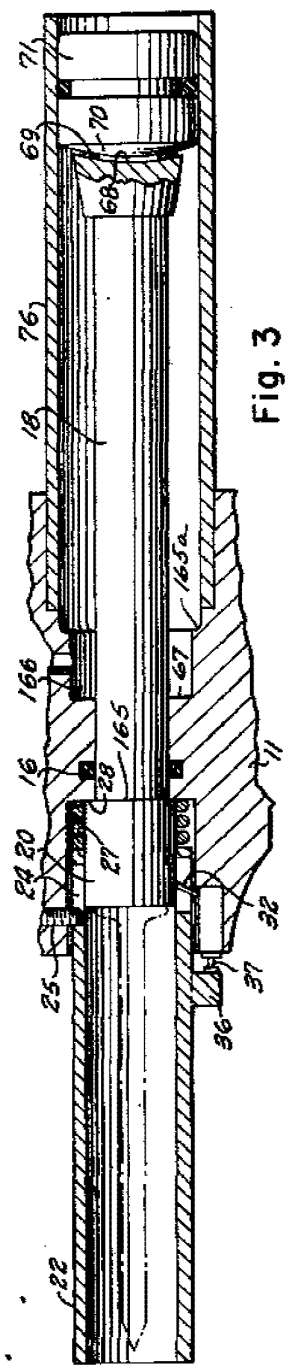

Fig. 3

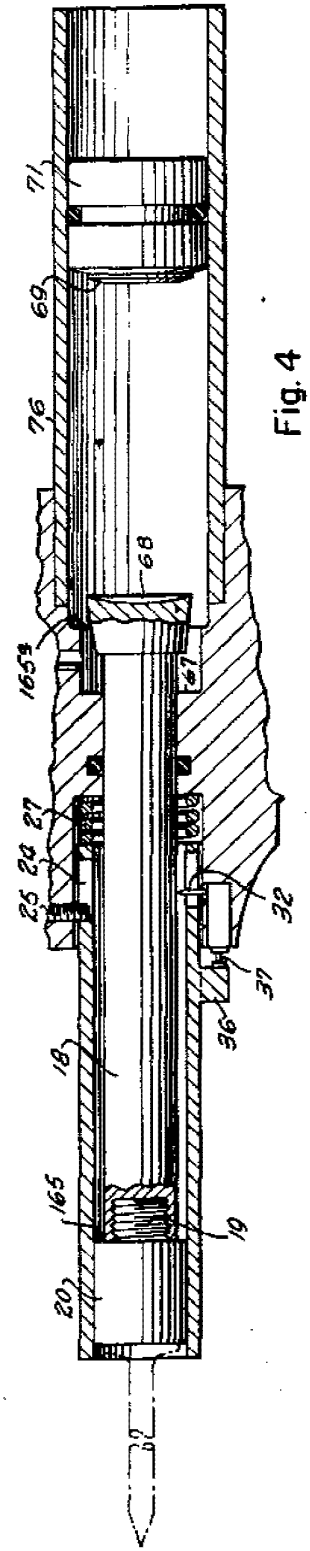

Fig. 4

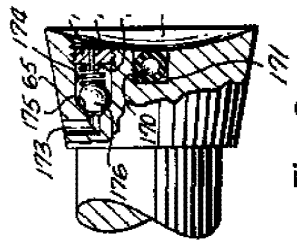

Fig. 6

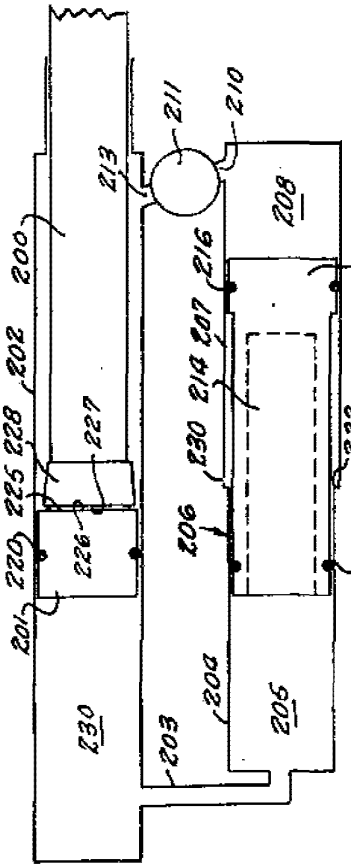

Fig. 5

Koki Holdings America Ltd.
Ex. 1002, p. 137

PATENT SPECIFICATION

(11) 1 559 571

1 559 571

(21) Application No. 39681/76 (22) Filed 24 Sept. 1976
(23) Complete Specification filed 23 Sept. 1977
(44) Complete Specification published 23 Jan. 1980
(51) INT. CL.[3] F16J 9/00
(52) Index at acceptance
F2T 37E1J 37E2A 37E2B

(72) Inventors JACK BURNHAM
JACK WASHBOURN

(19) THE PATENT OFFICE LONDON

(54) PISTON MEANS FOR PISTON-CYLINDER ARRANGEMENTS

(71) We, AVON INDUSTRIAL POLYMERS (BRADFORD-ON-AVON) LIMITED, a Company incorporated under the Laws of Great Britain, of Bath Road, Melksham, England, and WESTINGHOUSE BRAKE AND SIGNAL COMPANY LIMITED, a Company incorporated under the Laws of Great Britain, of 3, John Street, London, WC1N 2ES, England, do hereby declare the invention for which we pray that a Patent may be granted to us, and the method by which it is to be performed, to be particularly described in and by the following statement:—

This invention relates to piston means for piston-cylinder arrangements, particularly but not exclusively for pneumatic pressure operable, single acting piston-cylinder arrangements that for example are used for the application of the brakes of a railway vehicle (in which art such arrangements are known as "brake cylinders").

The piston means described in U.S.A. Patent Specification No. 3,183,795 comprises a piston member retaining a packing member to provide a sliding seal between the piston member and the cylinder member of the piston-cylinder arrangement, the piston member having an outer diameter less than the inner diameter of the cylinder member to provide therebetween an annular gap in which a separate ring is disposed to prevent the piston member engaging or "hammering" against the wall of the cylinder member. Lubrication of the latter is provided by a sprayed on coating of a semi-permanent lubricant such as molybdenum disulphide.

The piston means described in U.K. Specification No. 752 324 comprises a piston member retaining a packing member to provide a sliding seal between the piston member and the cylinder member of the piston-cylinder arrangement, the packing member being provided with at lease one continuous peripheral grease groove to retain lubricant which, it is said, is pressed out of the groove(s) onto the wall of the cylinder member when pneumatic pressure is applied to the pressure face of the piston means, and is sucked back into the groove from off the wall of the cylinder member when the said pneumatic pressure is relieved.

It is considered desirable to provide piston means which can avoid "hammering" and or by which any such distribution and or recovery of lubricant might be improved, and or whereby the piston means may comprise a minimal number of parts to reduce the costs of manufacture, assembly and stock-keeping.

According to one aspect of this invention, there is provided piston means for slideable mounting in a cylinder member to form therewith a piston-cylinder arrangement, the piston means comprising a packing member mounted on a piston member for movement therewith, the packing member comprising first and second portions having radially outer surfaces axially separated by a recess and dimensioned such that, in use, each outer surface contacts slidingly against the inner surface of a said cylinder member with said inner surface providing an outer closure for the recess, characterised in that the first portion is substantially more flexible than the second portion and in that an enclosed reservoir for lubricant is provided in the piston means in communication with the recess in the packing member.

Preferably the first portion comprises a lip portion to provide a sliding seal between the piston member and the inner surface of a said cylinder member, and the second portion comprises a ring portion formed as an integral unit with the lip portion in axially spaced relation to provide said recess, the ring portion having a diameter greater than the maximum diameter

BAD ORIGINAL

of the piston member for preventing "hammering" of the piston means when in a said cylinder member.

The ring portion may have a peripheral recess accommodating a wear ring of which the radially outer surface constitutes said second outer surface of the packing member, or (as is preferred) the ring portion may itself constitute a wear ring with its radially outer surface constituting the said second outer surface of the packing member. Preferably, in either case, the ring portion has a surface adjacent the lip portion and directed transversely to the radially outer surface of the ring portion, these two surfaces meeting at an acute angle to form a scraper ring for lubricant recovery.

Preferably the reservoir is formed in the ring member. Advantageously the reservoir may comprise a plurality of spaced apart individual cavities within the ring member (preferably equi-angularly spaced apart), each cavity having an opening to the recess. Preferably the reservoir contains grease or other lubricant.

According to another aspect of this invention there is provided a piston-cylinder arrangement (e.g. a pneumatically operable, single acting, so-called brake cylinder) comprising a cylinder member in which there is slideably mounted piston means according to said one aspect of this invention.

By way of example, embodiments of this invention will now be described with reference to the accompanying drawings of which:

Fig. 1 is a partly sectioned side view of a first embodiment of this invention;

Fig. 2 is a plan view of the piston means of Fig. 1 partly sectioned along the line A-A and the line B-B of Fig. 1;

Fig. 3 is a cross-sectional view along the line III-III of Fig. 2;

Fig. 4 is an enlarged view of part of Fig. 1;

Fig. 5 is a sketch showing a part cross-section through a second embodiment of this invention; and

Fig. 6 is a perspective cross-sectioned view of part of the packing member shown in Fig. 5.

Referring to Figs. 1 to 4, the piston means shown in Fig. 1 comprises a piston member 10 and an integrated packing member and ring member 12 mounted thereon. The piston member 10 has a domed front face 13 and at its rear a peripheral laterally directed flange 14 from which a piston rod 15 extends rearwardly. Between the face 13 and flange 14, the piston member 10 is provided with a shaped side surface 16 including a concave recess 17 and a nose 18. The integrated packing member and ring member 12 is a single unitary moulding of natural or synthetic rubber or of plastics material and comprises a packing member 20 that is generally cup-shaped and provided with an oppositely directed lip portion 21, and a ring member 22 extending from the region 23 where the lip portion 21 joins the remainder of the packing member 20. The internal surface of the packing member is provided with a thickened convex projection 24 to be a snap fit within the concave recess 17 of the piston member, such interfitting of these two components serving to mount the integrated component 12 on the piston member 10 for movement therewith. The nose 18 of the piston member 10 mates with the correspondingly shaped internal surface of the component 12 adjacent the region 23. The rearward end surface 25 of the ring member 22 abuts against the flange 14 of the piston member which has a diameter less than the minimum diameter of the tapered peripheral outer surface 26 of the ring member 22.

The diameter of the ring member's peripheral outer surface 26 increases linearly as the surface approaches the lip portion 21, and forms an acute angle at 27 with an adjoining radial surface 28 of the ring member (see Fig. 3). Conveniently this acute angle, when the ring member 22 is unstressed, is about 77½ degrees of arc. The surfaces 26 and 28 which meet at the acute-angled arris 27 form a forwardly projecting wall portion 29 of the ring member. The ring member 22 has a solid annulus 30 formed with a number (e.g. 36) of equi-angularly spaced cavities 31 that, as shown in Fig. 2, are each of generally triangular cross-section. Conveniently the included angle of each triangular cross-section is 45 degrees of arc. Each of the cavities 31 communicates via an associated opening 32 with the continuous annular space 33 between the lip portion 21 and the projecting wall portion 29 of the ring member 22.

When the piston means is slidingly inserted into a cylinder member 35 therefor (illustrated in broken outline in Fig. 1), the lip portion 21 of the packing member 20 deflects through about 22½ degrees of arc to make sliding contact along its length with the internal surface 36 of the cylinder member 35, and the ring member 22 is compressed so that its peripheral outer surface 26, which is tapered in the unstressed state, also makes sliding contact along its length with the internal surface 36 of the cylinder member 35 and deflects the surface 28 to be acutely inclined.

It will be evident from the drawings that, due to the solid annulus 30, the ring member 22 is less flexible than the lip portion 21 so that surface 26 is angularly deflected less than the outer surface of lip portion 21. Prior to such insertion of the piston means, the cavities 31 are all packed with

BAD ORIGINAL

grease or other suitable lubricant.

When, in use, compressed air is supplied to the cylinder chamber 37 via a port 38 in an end wall 39 of the cylinder member 35, the piston means is moved away from the end wall 39 against the action of a coiled compression spring (not shown) encompassing the piston rod 15 and acting against the rearward face of the piston member 10. In executing such movement, the lip portion 21 is urged by the pneumatic pressure into tight sealing yet sliding engagement of the cylinder surface 36, and there is a strong tendency for the lubricant in the cavities 31 to emerge therefrom through the openings 32 into the space 33 and contact the cylinder surface 36 to lubricate it with a layer of the lubricant. When the pneumatic pressure is relieved, the coiled compression spring returns the piston means to its rest position adjacent end wall 39 and in executing this return motion the projecting wall portion 29 of the ring member 22 acts as a scraper ring and tends to scrape the lubricant layer off the surface 36 by the action of arris 27 and surface 28 with a view to its being returned to the cavities 31 through the openings 32. In other words, positive lubricant recovery can be achieved. It will be noted that the space 33 is substantially closed by the lip portion 21 and the wall portion 29.

It will be appreciated that even in the compressed state of its sliding fit in the cylinder member 35, the diameter of surface 26 (which equals the diameter of surface 36) is greater than the diameter of flange 14. The resiliency of the ring member 22 is arranged such that it is less flexible than lip portion 21 and cannot be so compressed by the weight of the piston member or vibration of the latter also enable the piston member to contact directly the cylinder wall surface 36. Thus "hammering" is avoided, and the ring member 22 serves as a wear ring.

It will be apparent that the embodiment of Figs. 1-4, provides piston means for slideable mounting in a cylinder member to form therewith a piston-cylinder arrangement, the piston means comprising a piston member, a packing member mounted on the piston member for movement therewith and having a lip portion to provide a sliding seal between the piston member and a cylinder member of a said arrangement, a ring member for sliding contact of the cylinder member and to prevent direct engagement of the piston member against the said cylinder member, the ring member being integral and unitary with the packing member and having an outer wall portion axially spaced from the lip portion which space is in communication with an enclosed reservoir for lubricant formed in the ring member. In this embodiment, said outer wall portion has two defining surfaces thereof adjacent the lip portion mutually inclined and meeting at an acute angle to form the outer wall portion as a scraper ring for lubricant recovery.

In a modification of the embodiment of Figs. 1 to 4, the flange 14 is omitted, so that the ring member 22 encompasses the piston member 10 about the latter's maximum diameter. Optionally in this case, the cavities 31 may be closed rearwardly of the piston means by base portions moulded integrally with the ring member (and the packing member).

The embodiment of Figs. 5 and 6 is similar to that of Figs. 1 to 4 and like parts have been given like numerals. The embodiment of Figs 5 and 6 differ in that the outer surface 26 of the ring member 22 is recessed at 40 and accommodates a separate wear ring 42 which may be of a different material to that of the ring member 22. The openings 32 are in the form of slots and lead to cavities 31 of semi-circular cross-section.

In the embodiment of Fig. 5, the ring member 22 is arranged to have such resiliency as to be less flexible than the lip portion 21 and to prevent direct contact between the piston member 10 and the cylinder member's internal surface 36. As before, the flange 14 may be omitted so that the ring member 22 encompasses the piston member about its maximum diameter.

The embodiment of Figs. 5 and 6 may be modified by providing the ring member 22 with surfaces such as 26 and 28 of the embodiment of Figs. 1 to 4 that are mutually inclined and form a scraper ring for lubricant recovery.

It will be apparent that the embodiment of Figs. 5 and 6 provides piston means for slideable mounting in a cylinder member to form therewith a piston-cylinder arrangement, the piston means comprising a piston member, a packing member mounted on the piston member for movement therewith and having a lip portion to provide a sliding seal between the piston member and a cylinder member of a said arrangement, a ring member having an outer wall portion axially spaced from the lip portion and of a diameter greater than the maximum diameter of the piston member substantially to close the space between the lip portion and the outer wall portion, the ring member being integral and unitary with the packing member and being formed with an enclosed reservoir for lubricant in communication with said space. Also the outer wall portion is provided with a peripheral recess to accommodate a wear ring for sliding contact of the cylinder member.

It will also be apparent that in each of

BAD ORIGINAL

the embodiments of Figs. 1 to 6 the enclosed reservoir is provided by a plurality of equi-angularly spaced apart cavities within the ring member, each cavity having an opening whereby it is to communicate with said space. Conveniently the reservoir contains grease or other lubricant. Also, in each said embodiment, the packing member and ring member are moulded integrally with one another of a natural or synthetic rubber or plastics material.

WHAT WE CLAIM IS:—

1. Piston means for slideable mounting in a cylinder member to form therewith a piston-cylinder arrangement, the piston means comprising a packing member mounted on a piston member for movement therewith, the packing member comprising first and second portions having radially outer surfaces axially separated by a recess and dimensioned such that, in use, each outer surface contacts slidingly against the inner surface of a said cylinder member with said inner surface providing an outer closure for the recess, characterised in that the first portion is substantially more flexible than the second portion and in that an enclosed reservoir for lubricant is provided in the piston means in communication with the recess in the packing member.

2. Piston means according to Claim 1, wherein the first portion comprises a lip portion to provide a sliding seal between the piston member and the inner surface of a said cylinder member, and the second portion comprises a ring portion formed as an integral unit with the lip portion in axially spaced relation to provide said recess, the ring portion having a diameter greater than the maximum diameter of the piston member for preventing "hammering" of the piston means when in a said cylinder member.

3. Piston means according to Claim 2, characterised in that the ring portion has a peripheral recess accommodating a wear ring of which the radially outer surface constitutes said second outer surface of the packing member.

4. Piston means according to Claim 2, characterised in that the radially outer surface of the ring portion constitutes said second outer surface of the packing member and in that said ring portion constitutes a wear ring.

5. Piston means according to Claim 3 or Claim 4, characterised in that the radially outer surface of the ring portion meets at an acute angle the surface of the ring portion which defines one side part of said recess to provide a scraper ring for lubricant recovery.

6. Piston means according to Claim 5, characterised in that said acute angle is of the order of 77½ degrees.

7. Piston means according to any preceding claim, wherein the recess extends continuously around the packing member, the piston means being characterised in that the reservoir comprises a plurality of angularly spaced cavities each having an opening to said recess.

8. Piston means according to Claim 7 when dependent from Claim 2, characterised in that the cavities are located in said ring portion.

9. Piston means according to any preceding claim, characterised in that the reservoir contains grease or other lubricant.

10. Piston means substantially as herein described with reference to the accompanying drawings.

11. A piston-cylinder arrangement comprising a cylinder member in which there is slideably mounted piston means according to any preceding claim.

A. R. TURNER,
Agent for the Applicants.

Printed for Her Majesty's Stationery Office by The Tweeddale Press Ltd., Berwick-upon-Tweed, 1980
Published at the Patent Office, 25 Southampton Buildings, London, WC2A 1AY, from which copies may be obtained

BAD ORIGINAL

FIG. 1

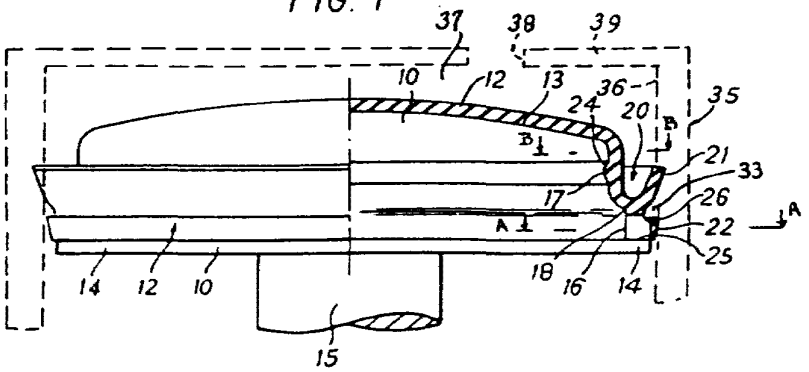

FIG. 2

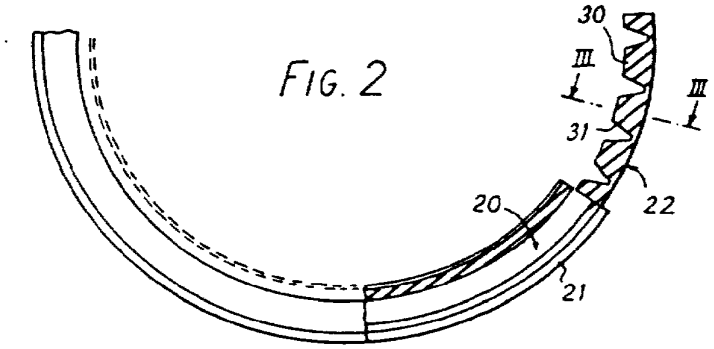

FIG. 3

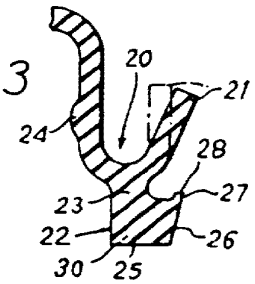

FIG. 4

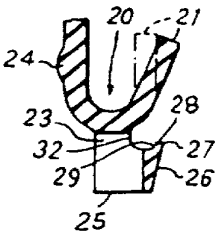

BAD ORIGINAL

FIG. 5

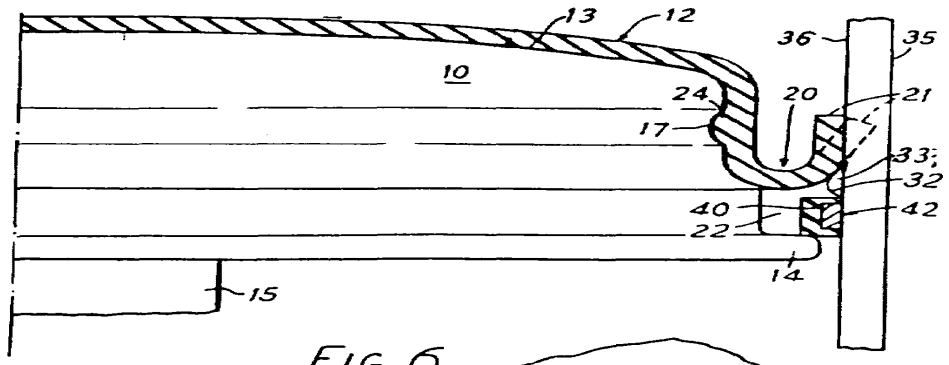

FIG. 6

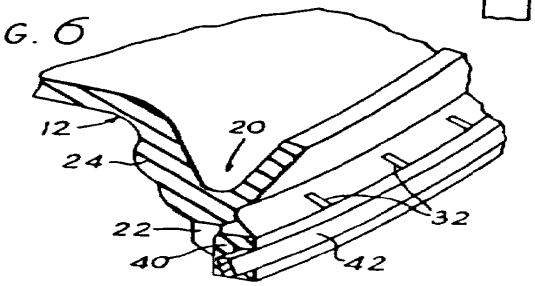

BAD ORIGINAL

Electronic Patent Application Fee Transmittal

Application Number:	
Filing Date:	
Title of Invention:	FASTENER DRIVING TOOL USING A GAS SPRING
First Named Inventor/Applicant Name:	Richard L. Leimbach
Filer:	Russell Frederick Gribbell
Attorney Docket Number:	SEN0523.US10

Filed as Large Entity

Filing Fees for Utility under 35 USC 111(a)

Description	Fee Code	Quantity	Amount	Sub-Total in USD($)
Basic Filing:				
UTILITY APPLICATION FILING	1011	1	320	320
UTILITY SEARCH FEE	1111	1	700	700
UTILITY EXAMINATION FEE	1311	1	800	800
Pages:				
Claims:				
Miscellaneous-Filing:				
Petition:				
Patent-Appeals-and-Interference:				

Description	Fee Code	Quantity	Amount	Sub-Total in USD($)
Post-Allowance-and-Post-Issuance:				
Extension-of-Time:				
Miscellaneous:				
			Total in USD ($)	**1820**

Electronic Acknowledgement Receipt

EFS ID:	44705494
Application Number:	17571811
International Application Number:	
Confirmation Number:	1007
Title of Invention:	FASTENER DRIVING TOOL USING A GAS SPRING
First Named Inventor/Applicant Name:	Richard L. Leimbach
Customer Number:	40628
Filer:	Russell Frederick Gribbell
Filer Authorized By:	
Attorney Docket Number:	SEN0523.US10
Receipt Date:	10-JAN-2022
Filing Date:	
Time Stamp:	13:36:42
Application Type:	Utility under 35 USC 111(a)

Payment information:

Submitted with Payment	yes
Payment Type	CARD
Payment was successfully received in RAM	$1820
RAM confirmation Number	E202210D38574294
Deposit Account	502116
Authorized User	Russell Gribbell

The Director of the USPTO is hereby authorized to charge indicated fees and credit any overpayment as follows:

37 CFR 1.17 (Patent application and reexamination processing fees)

37 CFR 1.21 (Miscellaneous fees and charges)

File Listing:

Document Number	Document Description	File Name	File Size(Bytes)/ Message Digest	Multi Part /.zip	Pages (if appl.)
1		sen0523us10.pdf	366939 ffeef4304d68ff1fab520e55bbbd7b94d06ae75c	yes	61
	Multipart Description/PDF files in .zip description				
	Document Description		**Start**	**End**	
	Specification		1	56	
	Claims		57	60	
	Abstract		61	61	
Warnings:					
Information:					
2	Drawings-only black and white line drawings	sen0523us10Drawings.pdf	853976 e0edd989a3c1bcc0a7029fbdf624e812c9a126c0	no	45
Warnings:					
Information:					
3	Application Data Sheet	sen0523us10_ApplicDataSheet.pdf	1257144 78065527e090ab757df99fc84c5408c4e723f67e	no	11
Warnings:					
Information:					
4	Power of Attorney	Kyoc_senco_AIAPOA.pdf	126580 aeeb8beada084d782d30e491240606f943baf00b	no	1
Warnings:					
Information:					
5	Assignee showing of ownership per 37 CFR 3.73	sen0523us10StmtUnder37CFR.pdf	122057 e8e89fa7ef169326383cc139a2cc395920981f85	no	3

Warnings:					
Information:					
6	Transmittal of New Application	sen0523us10UtilityApplTransmit.pdf	307449 9e9e4d63375f349f4e76c9925fc981f4147a29f7	no	2
Warnings:					
Information:					
7	Oath or Declaration filed	sen0523us5Decl_Bolender.pdf	1129437 b07e0d0e82b4076d74860830836278c6b7e29fc0	no	1
Warnings:					
Information:					
8	Oath or Declaration filed	sen0523us5Decl_Dickenson.pdf	1032803 5615274e899db22c215759431e47dea8e26844fa	no	1
Warnings:					
Information:					
9	Oath or Declaration filed	sen0523us5Decl_Knueven.pdf	1142239 03a969fb34896d724656e69ce130fea97dadf992	no	1
Warnings:					
Information:					
10	Oath or Declaration filed	sen0523us5Decl_Leimbach.pdf	1046124 ece085dbe27d2b6e03c325943be6923698545624	no	1
Warnings:					
Information:					
11	Oath or Declaration filed	sen0523us5Decl_McCardle.pdf	1126323 b3cf169ab2256cbaefc4844a2cca438236fba818	no	1
Warnings:					
Information:					
12	Oath or Declaration filed	sen0523us9SubstituteStatemt_LanceV2.pdf	287439 a48e5432077d2d69f62ac01212e1102a54aea92c	no	2
Warnings:					
Information:					

13	Oath or Declaration filed	sen0523us9SubstituteStatemt_PetrocelliV2.pdf	285638 66f0f5920394a5a8c44482efc3e8f9631c3af97a	no	2
Warnings:					
Information:					
14	Oath or Declaration filed	sen0523us9SubstituteStatemt_StoltzV2.pdf	289763 ceda6dd586dcb0f594250d6f36b82e04daf6de88	no	2
Warnings:					
Information:					
15	Information Disclosure Statement (IDS) Form (SB08)	sen0523us10_IDS.pdf	1036129 e58d3dec2df6ced0ca95036f080c6198e316348a	no	8
Warnings:					
Information:					
16	Information Disclosure Statement (IDS) Form (SB08)	sen0523us10_IDS02.pdf	258603 cb1fe7acb9927bc0b57aa51c601656be6ce2f7ad	no	2
Warnings:					
Information:					
This is not an USPTO supplied IDS fillable form					
17	Other Reference-Patent/App/Search documents	sen0522ep1_EPO_SearchRpt_2015.pdf	68847 98aacd936ae281e0bbee525c10fcf16cef566dd9	no	6
Warnings:					
Information:					
18	Foreign Reference	sen0523_DE8711784.pdf	3563810 ba0d5848f03e5ac97e3f7ce85b55a3ec45192ee4	no	15
Warnings:					
Information:					
19	Foreign Reference	sen0523_DE8711784_EnglishTranslation.pdf	4277740 2c9b310aabc27f012d5fa69d5a9d82245e5c3d85	no	12
Warnings:					
Information:					

20	Other Reference-Patent/App/Search documents	sen0523_ISAreport.pdf	670291 570a238d71774a3d71dc4d62584fd1257d7b2044	no	9
Warnings:					
Information:					
21	Non Patent Literature	sen0523_NPL1.pdf	68886 c43f71996a3d3c81e2a4a638911a1339375aa438	no	1
Warnings:					
Information:					
22	Non Patent Literature	sen0523_NPL2.pdf	215780 d83e0d939cf6a6d921f12478d2e20c27bcdba48c	no	2
Warnings:					
Information:					
23	Foreign Reference	sen0523us7_DE1503164A1.pdf	2165733 654c0ba17703304fbf5785b76fe229d5441a1e0d	no	42
Warnings:					
Information:					
24	Foreign Reference	sen0523us7_DE1503164A1_English.pdf	292656 4afdbacd51df240fe5701d59ead96fb9bb395ed0	no	36
Warnings:					
Information:					
25	Foreign Reference	sen0523us7_GB1559571A.pdf	344977 62bda31cbfe48cca2540ed18fe6953ef0400a538	no	6
Warnings:					
Information:					
26	Non Patent Literature	Senco_Cordless_Finish_41_2008.pdf	1430585 3973c8ede3652ec24f939e21b4d5a90d25fe1070	no	4
Warnings:					
Information:					

27	Non Patent Literature	Senco_Model_41_AirFree41_2004.pdf	1716825 d461c71630695c17a17aec9c36d78bf4ab38a7b5	no	4
Warnings:					
Information:					
28	Non Patent Literature	Senco_Model_41_Finish_Nailer_2001.pdf	7531224 46dbfb9b6a894eec5264831b22e594055f08b538	no	16
Warnings:					
Information:					
29	Fee Worksheet (SB06)	fee-info.pdf	43911 802cea15feb0db95c4fd75414c3978ac4ddfe0af	no	2
Warnings:					
Information:					
			Total Files Size (in bytes):	33059908	

This Acknowledgement Receipt evidences receipt on the noted date by the USPTO of the indicated documents, characterized by the applicant, and including page counts, where applicable. It serves as evidence of receipt similar to a Post Card, as described in MPEP 503.

New Applications Under 35 U.S.C. 111
If a new application is being filed and the application includes the necessary components for a filing date (see 37 CFR 1.53(b)-(d) and MPEP 506), a Filing Receipt (37 CFR 1.54) will be issued in due course and the date shown on this Acknowledgement Receipt will establish the filing date of the application.
National Stage of an International Application under 35 U.S.C. 371
If a timely submission to enter the national stage of an international application is compliant with the conditions of 35 U.S.C. 371 and other applicable requirements a Form PCT/DO/EO/903 indicating acceptance of the application as a national stage submission under 35 U.S.C. 371 will be issued in addition to the Filing Receipt, in due course.
New International Application Filed with the USPTO as a Receiving Office
If a new international application is being filed and the international application includes the necessary components for an international filing date (see PCT Article 11 and MPEP 1810), a Notification of the International Application Number and of the International Filing Date (Form PCT/RO/105) will be issued in due course, subject to prescriptions concerning national security, and the date shown on this Acknowledgement Receipt will establish the international filing date of the application.

FASTENER DRIVING TOOL USING A GAS SPRING

[0001] CROSS-REFERENCE TO RELATED APPLICATIONS

[0002] The present application is a continuation of Serial No. 16/389,944, titled FASTENER DRIVING TOOL USING A GAS SPRING, filed on April 30, 2019; which is a continuation of Serial No. 15/583,202, titled FASTENER DRIVING TOOL USING A GAS SPRING, filed on May 1, 2017, now U.S. Patent No. 10,478,954 (issued on November 19, 2019); which is a continuation of Serial No. 14/077,313, titled FASTENER DRIVING TOOL USING A GAS SPRING, filed on November 12, 2013, now U.S. Patent No. 9,676,088; which is a divisional of Serial No. 13/770,481, titled FASTENER DRIVING TOOL USING A GAS SPRING, filed on February 19, 2013, now U.S. Patent No. 8,602,282; which is a continuation of Serial No. 12/913,049, titled METHOD FOR CONTROLLING A FASTENER DRIVING TOOL USING A GAS SPRING," filed on October 27, 2010, now U.S. Patent No. 8,387,718; which is a divisional of Serial No. 12/243,693, titled "METHOD FOR CONTROLLING A FASTENER DRIVING TOOL USING A GAS SPRING," filed on October 1, 2008, now U.S. Patent No. 8,011,441; which claims priority to provisional patent application Serial No. 60/977,678, titled "FASTENER DRIVING TOOL USING A GAS SPRING," filed on October 5, 2007.

[0003] BACKGROUND OF THE INVENTION

[0004] 1. Field of the Invention

[0005] The present invention relates to linear fastener driving tools, and, more particularly, directed to portable tools that drive staples, nails, or other linearly driven fasteners. The invention is specifically disclosed as a gas spring linear fastener driving tool, in which a cylinder filled with compressed gas is used to quickly force a piston through a driving stroke movement, while also driving a fastener into a workpiece. The piston is then moved back to its starting position by use of a rotary-to-linear lifter, which again compresses the gas above the piston, thereby preparing the tool for another driving stroke. A driver member is attached to the piston, and has protrusions along its edges that are used to contact the lifter member, which lifts the driver during a return stroke. A pivotable latch is controlled to move into either an interfering position or a non-interfering position with respect to the

Koki Holdings America Ltd.
Ex. 1002, p. 152

driver protrusions, and acts as a safety device, by preventing the driver from making a full driving stroke at an improper time. In alternative embodiments, the fastener driving tool uses a different type of driving device, such as a mechanical spring, to force the driver into a driving stroke.

[0006] 2. Description of the Related Art

[0007] An early air spring fastener driving tool is disclosed in United States Patent No. 4,215,808, to Sollberger. The Sollberger patent used a rack and pinion-type gear to "jack" the piston back to its driving position. A separate motor was to be attached to a belt that was worn by the user; a separate flexible mechanical cable was used to take the motor's mechanical output to the driving tool pinion gear, through a drive train.

[0008] Another air spring fastener driving tool is disclosed in United States Patent No. 5,720,423, to Kondo. This Kondo patent used a separate air replenishing supply tank with an air replenishing piston to refresh the pressurized air needed to drive a piston that in turn drove a fastener into an object.

[0009] Another air spring fastener driving tool is disclosed in published patent application no. US2006/0180631, by Pedicini, which uses a rack and pinion to move the piston back to its driving position. The rack and pinion gear are decoupled during the drive stroke, and a sensor is used to detect this decoupling. The Pedicini tool uses a release valve to replenish the air that is lost between nail drives.

[0010] What is needed in the art is a portable fastener driving tool that is electrically powered, but which uses a gas spring principle of operation to drive a fastener into an object, and also uses few moving parts, which allows for simplicity of operation and provides a substantially gas-tight system for containing the pressurized gas for the gas spring.

SUMMARY OF THE INVENTION

[0011] Accordingly, it is an advantage of the present invention to provide a fastener driving tool that operates on a gas spring principle, in which the cylinder that contains the moving piston and driver is substantially surrounded by a pressure vessel (as a main storage

chamber) to increase the storage space of the pressurized gases needed for the gas spring effect.

[0012] It is another advantage of the present invention to provide a fastener driving tool that uses a gas spring principle to provide a quick downward driving stroke, and uses a rotary-to-linear lifter having a cam-shaped perimeter surface and multiple cylindrical protruding pins that lift the fastener driver element and the piston back to the initiating firing (or driving) position.

[0013] It is a further advantage of the present invention to provide a fastener driving tool that operates on a gas spring principle, in which the tool has a cylinder displacement volume and also includes a main storage chamber, and in which a volumetric ratio of the main storage chamber's volume with respect to the cylinder's displacement volume is at least 2.0:1.

[0014] It is still a further advantage of the present invention to provide a fastener driving tool that operates on a gas spring principle, in which there is a "working storage volume" comprising a combination of a main storage chamber and a cylinder displacement volume, and in which there is no gas replenishment system on-board the tool for allowing a user to replenish the charge gases of the tool's working storage volume, thereby reducing opportunities for gas leaks.

[0015] It is yet another advantage of the present invention to provide a fastener driving tool that uses a gas spring principle that uses a rotary-to-linear lifter to move the driver back to its firing (or driving) position, in which there can be a variable driving stroke by use of multiple rotations of the lifter member.

[0016] It is still another advantage of the present invention to provide a fastener driving tool that operates on a gas spring principle, in which, for a first embodiment, a movable latch is controlled by a solenoid to disengage from multiple teeth of the driver element during a driving stroke, but also will tend to engage the teeth of the driver element as a safety interlock, and also at the maximum driver element displacement just before a driving stroke is to occur, so that the movable latch engages the driver teeth until the user activates the tool.

[0017] It is still another advantage of the present invention to provide a fastener driving tool that operates on a gas spring principle, in which, for a second embodiment, a gearbox is

provided that is essentially self-locking from its output side, or has a one-way feature, and thus the gearbox/lifter combination holds the driver in position just before a driving stroke.

[0018] It is a yet further advantage of the present invention to provide a fastener driving tool that operates on a gas spring principle which includes a system controller that allows operation in either a "bottom firing mode" or a "trigger firing mode."

[0019] It is a still further advantage of the present invention to provide a fastener driving tool that operates on a gas spring principle in which the system controller has error correction capability, including the capability of recovering from a jam of the driver element, without having to completely disable the tool.

[0020] Additional advantages and other novel features of the invention will be set forth in part in the description that follows and in part will become apparent to those skilled in the art upon examination of the following or may be learned with the practice of the invention.

[0021] To achieve the foregoing and other advantages, and in accordance with one aspect of the present invention, a method for controlling a fastener driving tool is provided, in which the method comprises the following steps: (a) providing a fastener driving tool that includes: (i) a housing, (ii) a system controller, (iii) a fastener driving mechanism that moves a driver member toward an exit end of the mechanism, (iv) a prime mover that moves a lifter member which moves the driver member away from the exit end of the mechanism, (v) a latch control device that moves a latch member which has a catching surface, (vi) a safety contact element, (vii) a user-actuated trigger, and (vii) a fastener; (b) initiating a driving cycle by pressing the exit end against a workpiece and actuating the trigger, thereby: (i) causing the latch control device to activate, which moves the catching surface of the latch member to a position that does not interfere with movements of the driver member; and (ii) causing the fastener driving mechanism to force the driver member to move toward the exit end and drive the fastener into the workpiece; (c) actuating the prime mover, thereby moving the lifter member and causing the driver member to move away from the exit end toward a ready position; and (d) then de-activating the latch control device, which allows a mechanical biasing of the latch member to move the catching surface of the latch member to a position that interferes with movements of the driver member.

[0022] In accordance with another aspect of the present invention, a method for controlling a fastener driving tool is provided, in which the method comprises the following

steps: (a) providing a fastener driving tool that includes: (i) a housing; (ii) a system controller; (iii) a safety contact element; (iv) a user-actuated trigger; (v) a fastener; (iv) a prime mover that moves a lifter member which moves a driver member away from an exit end of the mechanism; and (vii) a fastener driving mechanism that moves the driver member toward the exit end of the mechanism, the fastener driving mechanism including: (A) a hollow cylinder comprising a cylindrical wall with a movable piston therewithin, the hollow cylinder containing a displacement volume created by a stroke of the piston, and (B) a main storage chamber that is in fluidic communication with the displacement volume of the cylinder, wherein the main storage chamber and the displacement volume are initially charged with a pressurized gas; (b) selecting, by a user, an operating mode of the driving cycle to be one of: a "bottom firing mode," and a "restrictive firing mode;" wherein: (i) if the restrictive firing mode is selected, the tool will operate if the safety contact element has been actuated before the trigger actuator has been operated; and (ii) if the bottom firing mode is selected, the tool will operate if both: (A) the trigger actuator has been operated, and (B) the safety contact element has been actuated, in either sequence; (c) initiating a driving cycle by pressing the exit end against a workpiece and actuating the trigger, thereby causing the fastener driving mechanism to force the driver member to move toward the exit end and drive a fastener into the workpiece; and (d) actuating the prime mover, thereby moving the lifter member and causing the driver member to move away from the exit end toward a ready position.

[0023] In accordance with yet another aspect of the present invention, a fastener driving tool is provided, which comprises: (a) a housing that contains a prime mover, and a system controller; (b) a fastener driving mechanism that includes: (i) a hollow cylinder having a movable piston therewithin, the hollow cylinder having a first end and a second, opposite end, the hollow cylinder containing a displacement volume created by a stroke of the piston, the displacement volume being initially charged with a pressurized gas; (ii) a guide body that is substantially adjacent to the second end of the cylinder, the guide body having a receiving end, an exit end, and a passageway therebetween, the receiving end being proximal to the second end of the cylinder, the guide body being configured to receive a fastener that is to be driven from the exit end; (iii) an elongated driver member that is in mechanical communication with the piston, the driver member having a driving surface that is sized and

shaped to push a fastener into an external workpiece, wherein the passageway of the guide body allows the driver member to pass therethrough toward the exit end during a driving stroke, and allows the driver member to pass therethrough away from the exit end during a lifting interval; (A) the driver member having a first longitudinal edge; (B) the driver member having a first plurality of spaced-apart protrusions along the first longitudinal edge; and (iv) a lifter member that exhibits an outer shape that defines a perimeter of the lifter member's surface: (A) the lifter member being movable, under command of the system controller, by the prime mover; (B) the lifter member having a discontinuous contact surface that, at predetermined locations along the discontinuous contact surface, makes contact with the first plurality of spaced-apart protrusions of the driver member such that, under first predetermined conditions, the lifter member is moved in a first direction and thereby causes the driver member to be moved from its driven position toward its ready position; and (C) the lifter member being positionable by the prime mover, under second predetermined conditions, such that the discontinuous contact surface of the lifter member does not mechanically interfere with the first plurality of spaced-apart protrusions along the first longitudinal edge of the driver member during the driving stroke, in which the driver member moves from its ready position toward its driven position; (c) a safety contact element that extends to the exit end of the guide body, and which is movable between an actuated position when the safety contact element is pressed against the external workpiece, and a non-actuated position when the safety contact element is not pressed against the external workpiece; (d) a trigger actuator that is user-actuated; (e) a trigger position sensor; and (f) a safety contact element position sensor; wherein the cylinder and piston act as a gas spring, under the second predetermined conditions, to move the driver member from its ready position toward its driven position, using the pressurized gas acting on the piston, while the driver member's driving surface contacts a fastener and moves the fastener toward the exit end of the guide body.

[0024] Still other advantages of the present invention will become apparent to those skilled in this art from the following description and drawings wherein there is described and shown a preferred embodiment of this invention in one of the best modes contemplated for carrying out the invention. As will be realized, the invention is capable of other different embodiments, and its several details are capable of modification in various, obvious aspects

all without departing from the invention. Accordingly, the drawings and descriptions will be regarded as illustrative in nature and not as restrictive.

BRIEF DESCRIPTION OF THE DRAWINGS

[0025] The above-mentioned and other features and advantages of this invention, and the manner of attaining them, will become more apparent and the invention will be better understood by reference to the following description of an embodiment of the invention taken in conjunction with the accompanying drawings, wherein:

[0026] FIG. 1 is a side view in partial cross-section of a first embodiment of a fastener driving tool constructed according to the principles of the present invention.

[0027] FIG. 2 is a perspective view mainly from the side, but also from above, and in partial cross-section, of the gas spring cylinder mechanism of the first embodiment fastener driving tool of FIG. 1.

[0028] FIG. 3 is another perspective view from the side and somewhat from above and in partial cross-section of the gas spring cylinder portion of the first embodiment fastener driving tool of FIG. 1, better showing the driver mechanism, with the piston at its lowest "driven" position.

[0029] FIG. 4 is another perspective view from the side and somewhat from above and in partial cross-section of the gas spring cylinder portion of the first embodiment fastener driving tool of FIG. 1, in which the driver and piston are near their top-most position, but still latched and not quite ready for firing (driving).

[0030] FIG. 5 is another perspective view from the side and somewhat from above and in partial cross-section of the gas spring cylinder portion of the first embodiment fastener driving tool of FIG. 1, in which the driver and piston are near their top-most position, in which the mechanism is now unlatched and ready for firing (driving).

[0031] FIG. 6 is a perspective view of driver, rotary-to-linear lifter, and latch portions of the driver mechanism for the first embodiment fastener driving tool of FIG. 1.

[0032] FIG. 7 is another perspective view from a different angle of the same components of FIG. 6.

[0033] FIG. 8 is a side view in partial cross-section of major portions of the driving mechanisms for the first embodiment fastener driving tool of FIG. 1.

Koki Holdings America Ltd.
Ex. 1002, p. 158

[0034] FIG. 9 is a perspective view mainly from the left side, but angled to better see the details of the latch mechanism including its solenoid, for the first embodiment fastener driving tool of FIG. 1.

[0035] FIG. 10 is an elevational side view in cross-section of some of the details of the cylinder/piston components for the first embodiment fastener driving tool of FIG. 1.

[0036] FIG. 11 is an elevational side view in cross-section of some of the details of the cylinder/piston components for an alternative embodiment that could be used with the first embodiment fastener driving tool of FIG. 1.

[0037] FIG. 12 is a perspective view from the opposite side of the rotary-to-linear lifter, used in the first embodiment fastener driving tool of FIG. 1.

[0038] FIG. 13 (FIGS. 13A-13B) is a first portion of a flow chart showing some of the important logical steps performed by the controller of the first embodiment fastener driving tool of FIG. 1.

[0039] FIG. 14 (FIGS. 14A-14C) is a second portion of the flow chart of FIG. 13.

[0040] FIG. 15 is a third portion of the flow chart of FIG. 13.

[0041] FIG. 16 is a side, elevational view of a second embodiment of a fastener driving tool constructed according to the principles of the present invention.

[0042] FIG. 17 is a side view in partial cross-section of the second embodiment fastener driving tool of FIG. 16.

[0043] FIG. 18 is a front, elevational view in partial cross-section of the second embodiment fastener driving tool of FIG. 16.

[0044] FIG. 19 is a perspective view mainly from the side, but also from above, and in partial cross-section, of the gas spring cylinder mechanism of the second embodiment fastener driving tool of FIG. 16.

[0045] FIG. 20 is another perspective view from the side and somewhat from above and in partial cross-section of the gas spring cylinder portion of the second embodiment fastener driving tool of FIG. 16, better showing the driver mechanism, with the piston at its lowest "driven" position.

[0046] FIG. 21 is another perspective view from the side and somewhat from above and in partial cross-section of the gas spring cylinder portion of the second embodiment fastener

driving tool of FIG. 16, in which the driver and piston are near their top-most position, and the latch is in its interfering position.

[0047] FIG. 22 is another perspective view from the side and somewhat from above and in partial cross-section of the gas spring cylinder portion of the second embodiment fastener driving tool of FIG. 16, in which the driver and piston are near their top-most position, and the latch is in its non-interfering position, in which the mechanism is now ready for firing (driving).

[0048] FIG. 23 is a perspective view of driver, rotary-to-linear lifter, and latch portions of the driver mechanism for the second embodiment fastener driving tool of FIG. 16.

[0049] FIG. 24 is another perspective view from a different angle of the same components of FIG. 23.

[0050] FIG. 25 is a side elevational view in partial cross-section of major portions of the driving mechanisms for the second embodiment fastener driving tool of FIG. 16.

[0051] FIG. 26 is a side view in partial cross-section of major portions of the driving mechanisms for a third embodiment fastener driving tool somewhat similar to that of FIG. 16, however, using a mechanical drive spring attached to the driver, rather than a gas drive spring in a cylinder.

[0052] FIG. 27 is a perspective view mainly from the left side, but angled to better see the details of the latch mechanism including its solenoid, for the second embodiment fastener driving tool of FIG. 16.

[0053] FIG. 28 is an elevational side view in cross-section of some of the details of the cylinder/piston components for the second embodiment fastener driving tool of FIG. 16.

[0054] FIG. 29 is a perspective view from the opposite side of the rotary-to-linear lifter, used in the second embodiment fastener driving tool of FIG. 16.

[0055] FIG. 30 are perspective views showing some of the details of a first particular arrangement of a rotary-to-linear lifter and the surfaces that engage the driver, in which the lifter exhibits a single "tooth" and has an arcuate outer perimeter shape, which can be used with the fastener driving tools of FIG. 1 or FIG. 16.

[0056] FIG. 31 are perspective views showing some of the details of a second particular arrangement of a rotary-to-linear lifter and the surfaces that engage the driver, in which the

lifter exhibits two "teeth" and has an irregular outer perimeter shape, which can be used with the fastener driving tools of FIG. 1 or FIG. 16.

[0057] FIG. 32 are perspective views showing some of the details of a third particular arrangement of a rotary-to-linear lifter and the surfaces that engage the driver, in which the lifter exhibits three "teeth" and has a circular outer perimeter shape, which can be used with the fastener driving tools of FIG. 1 or FIG. 16.

[0058] FIG. 33 are perspective views showing some of the details of a third particular arrangement of a rotary-to-linear lifter and the surfaces that engage the driver, in which the lifter exhibits three "teeth" and has a square outer perimeter shape, which can be used with the fastener driving tools of FIG. 1 or FIG. 16.

[0059] FIG. 34 is a side, elevational view of a third embodiment of a fastener driving tool constructed according to the principles of the present invention, in which the storage chamber does not surround the working cylinder.

[0060] FIG. 35 (FIGS. 35A-35C) is a first portion of a flow chart showing some of the important logical steps performed by the controller of the second embodiment fastener driving tool of FIG. 16.

[0061] FIG. 36 (FIGS. 36A-36D) is a second portion of the flow chart of FIG. 35.

[0062] FIG. 37 is a third portion of the flow chart of FIG. 35.

[0063] Corresponding reference characters indicate corresponding parts throughout the several views. The exemplification set out herein illustrates one preferred embodiment of the invention, in one form, and such exemplification is not to be construed as limiting the scope of the invention in any manner.

DETAILED DESCRIPTION OF THE INVENTION

[0064] The terms “first” and “second” preceding an element name, e.g., first pin, second pin, etc., are used for identification purposes to distinguish between similar elements, and are not intended to necessarily imply order, nor are the terms “first” and “second” intended to preclude the inclusion of additional similar elements.

[0065] Reference will now be made in detail to the present preferred embodiment of the invention, an example of which is illustrated in the accompanying drawings, wherein like numerals indicate the same elements throughout the views.

[0066] Referring now to FIG. 1, a first embodiment of a fastener driving tool is generally designated by the reference numeral 10. This tool 10 is mainly designed to linearly drive fasteners such as nails and staples. Tool 10 includes a handle portion 12, a fastener driver portion 14, a fastener magazine portion 16, and a fastener exit portion 18.

[0067] A "left" outer cover of the driver portion is indicated at 20. A "top" cover is indicated at 22, while a "front" outer cover or "housing" of the driver portion is indicated at 24. A "rear" cover for the handle portion is indicated at 26 (which is also the battery pack cover), while a "rear" cover of the magazine portion is indicated at 28. It will be understood that the various directional nomenclature provided above is with respect to the illustration of FIG. 1, and the first embodiment fastener driving tool 10 can be used in many other angular positions, without departing from the principles of the present invention.

[0068] The area of the first embodiment tool 10 in which a fastener is released is indicated approximately by the reference numeral 30, which is the "bottom" of the fastener exit portion of tool 10. Before the tool is actuated, a safety contact element 32 extends beyond the bottom 30 of the fastener exit, and this extension of the safety contact element is depicted at 34, which is the bottom or "front" portion of the safety contact element. Other elements that are depicted in FIG. 1 include a guide body 36 and a front cover 38, which are in mechanical communication with the magazine portion 16.

[0069] Reference numeral 60 indicates a magazine housing, while reference numeral 62 indicates a fastener track through which the individual fasteners run therethrough while they remain within the magazine portion 16. A feeder carriage 64 is used to feed an individual fastener from the magazine into the drive mechanism area, and a back plate 66 is used to carry an individual fastener while it is being driven. In the illustrated embodiment, the feeder carriage 64 positions a fastener to a position within the guide body that is coincident with the path of the driver member 90, so that when the driver 90 moves through a driving stroke, its driving end will basically intercept the fastener and carry that fastener to the exit end of the tool 10, essentially at the bottom portion 30 of the tool's exit area.

[0070] The first embodiment fastener driving tool 10 also includes a motor 40 which acts as a prime mover for the tool, and which has an output that drives a gearbox 42. An output shaft 44 of the gearbox drives a lifter drive shaft 102 (see FIG. 2). A solenoid 46 is depicted on FIG. 1, and further details of its operation are discussed below. A battery 48 is attached

near the rear of the handle portion 12, and this battery provides electrical power for the motor 40 as well as for a control system.

[0071] A printed circuit board that contains a controller is generally designated by the reference numeral 50, and is placed within the handle portion 12 in this embodiment. A trigger switch 52 is activated by a trigger actuator 54. As can been seen by viewing FIG. 1, the handle portion 12 is designed for gripping by a human hand, and the trigger actuator 54 is designed for linear actuation by a person's finger while gripping the handle portion 12. Trigger switch 52 provides an input to the control system 50. There are also other input devices for the controller, however those input devices are not seen in FIG. 1.

[0072] The controller will typically include a microprocessor or a microcomputer device that acts as a processing circuit. At least one memory circuit will also typically be part of the controller, including Random Access Memory (RAM) and Read Only Memory (ROM) devices. To store user-inputted information (if applicable for a particular tool model), a non-volatile memory device would typically be included, such as EEPROM, NVRAM, or a Flash memory device.

[0073] Referring now to FIG. 2, a working cylinder subassembly is designated by the reference numeral 71, and this is included as part of the fastener driver portion 14. On FIG. 2, the working cylinder 71 includes a cylinder wall 70, and within this cylinder wall 70 is a piston 80, a movable piston stop 82, and a stationary piston stop 84 (see FIG. 3). Part of the piston mechanism of this embodiment includes a piston seal 86, a piston guide ring 88, and a piston scraper 89 (see FIG. 10). Surrounding, in the illustrated embodiment, the cylinder wall 70 is a main storage chamber 74 (also sometimes referred to herein as a "pressure vessel storage space") and an outer pressure vessel wall 78 (which corresponds to the "front" cover 24 of FIG. 1, along the left portion of this view). At the top (as seen on FIG. 2) of the fastener driver portion 14 is a top cap 72 for the cylinder mechanism.

[0074] Also within the fastener driver portion 14 are mechanisms that will actually drive a fastener into a solid object. This includes a driver 90, a cylinder "venting chamber" 94 (which would typically always be at atmospheric pressure), a driver track 98 (see FIG. 4), a rotary-to-linear lifter 100, and a latch 120. The driver 90 is also sometimes referred to herein as a "driver member" and the rotary-to-lifter 100 is also sometimes referred to herein as a "lifter member," or simply as a "lifter." Driver 90 is rather elongated, and as an individual

element can best be seen in FIGS. 6 and 7. There are multiple "teeth" 92 that are positioned along the driver. In the illustrated embodiment, these teeth 92 are spaced-apart not only in a transverse direction from the elongated centerline of driver 90, but they are also spaced-apart from one another along the outer longitudinal edges of the driver 90. The positions of teeth 92 are clearly illustrated in FIGS. 6 and 7. It will be understood that the precise positions for the teeth 92 could be different from those illustrated for the driver 90 without departing from the principles of the present invention.

[0075] There is a cylinder base 96 that mainly separates the gas pressure portions of the fastener driver portion 14 from the mechanical portions of that driver portion 14. The venting of air from the cylinder venting chamber 94 passes through the cylinder base 96, as seen at a vent 150 (see FIG. 3). The mechanical portions of FIG. 2 begin with a rotary-to-linear lifter 100 which was briefly mentioned above, along with a lifter drive shaft 102. Drive shaft 102 protrudes through the center portions of the fastener driver portion 14 and through the center of the lifter 100, and this shaft is used to rotate the lifter, as desired by the control system.

[0076] Lifter 100 is not designed with an entirely circular outer perimeter, but instead is arcuate and portions of its perimeter exhibit an eccentric shape of a cam (see FIG. 12). A portion of the lifter's outer perimeter is mainly circular for about half of a circle (designated by the reference numeral 116), but the other half of the lifter's outer perimeter is more eccentric, which provides an elliptical surface that is designated by the reference numeral 110. The rotary-to-linear lifter 100 also includes three cylindrical protrusions (or "extensions") that will also be referred to herein as "pins." The first such pin ("pin 1") is designated 104, the second pin ("pin 2") is designated 106, while the third pin ("pin 3") is designated 108. These pins are all viewed on FIG. 12. Furthermore, there is a fourth cylindrical pin ("pin 4") that protrudes from the opposite side of the lifter 100, which fourth pin is designated 114, and which can be viewed on several of the other figures, namely FIGS. 2-8.

[0077] It should be noted that FIGS. 2-8 also depict a "back" side of the first three pins 104, 106, and 108, in which these views essentially show a "boss portion" of those pins. These boss portions of the pins 104, 106, 108 are not entirely necessary for the proper functioning of the rotary-to-linear lifter 100, however, the boss portions are illustrated in the figures of this patent document for ease of description. (In other words, the surface of the

lifter 100 could be perfectly smooth at those locations rather than exhibiting a "boss.") It should be understood that the "working side" of these three pins 104, 106, and 108 is on the opposite side of the lifter 100 in the views of FIGS. 2-8, and this working side is directly illustrated in FIG. 12. When discussing these pins 104, 106, and 108 with respect to FIGS. 2-8 in this written description, it is with reference to the "boss side" of those pins; however, the effects of the "working side" of those pins is discussed in some detail with respect to other structures that are also illustrated on FIGS. 2-8. It should also be noted that pins 104, 106, 108, and 114 are illustrated as having circular cross-sectional shapes, which is desirable for this embodiment, although other cross-sectional shapes could instead be used without departing from the principles of the present invention, particularly for the fourth pin 114.

[0078] The latch 120 that was briefly noted above is depicted on FIG. 2, and has a latch shaft 122 protruding therethrough, and this shaft rotates the latch 120 as determined by the controller. Latch 120 includes a latch "catching surface" at 124, and this will be more fully explained below. In FIG. 2, there is an internal cover 112 that is a portion of the back plate 66, and hides some of the other mechanical components that will be visible in other views.

[0079] In FIG. 2, the piston 80 is not quite at its uppermost or top-most position, and a gas pressure chamber 76 can be seen above the top-most area of the piston, near the piston seal 86. It will be understood that the gas pressure chamber 76 and the main storage chamber (or storage space) 74 are in fluidic communication with one another. It will also be understood that the portion to the interior of the cylinder wall 70 forms a displacement volume that is created by the stroke of the piston 80. In other words, the gas pressure chamber 76 is not a fixed volume, but this chamber will vary in volume as the piston 80 moves up and down (as seen in FIG. 2). This type of mechanical arrangement is often referred to as a "displacement volume," and that terminology will mainly be used herein for this non-fixed volume 76.

[0080] It will be further understood that the main storage chamber 74 preferably comprises a fixed volume, which typically would make it less expensive to manufacture; however, it is not an absolute requirement that the main storage chamber actually be of a fixed volume. It would be possible to allow a portion of this chamber 74 to deform in size and/or shape so that the size of its volume would actually change, during operation of the present invention, without departing from the principles of the present invention.

[0081] In the illustrated embodiment for the first embodiment fastener driving tool 10, the main storage chamber 74 substantially surrounds the working cylinder 71. Moreover, the main storage chamber 74 is annular in shape, and it is basically co-axial with the cylinder 71. This is a preferred configuration of the illustrated first embodiment, but it will be understood that alternative physical arrangements could be designed without departing from the principles of the present invention.

[0082] Referring now to FIG. 3, the piston is depicted at its bottom-most travel position, and in this configuration, the displacement volume 76 and the main storage chamber 74 are at their largest combined volumes, while the cylinder venting chamber 94 is at its minimum volume. This bottom position is also sometimes referred to herein as the "driven position."

[0083] In FIG. 3, the movable piston stop 82 is now in contact with the stationary piston stop 84, which is why the cylinder venting chamber 94 is at its minimum (or zero) volume. In FIG. 3, the driver 90 is also at its bottom-most travel position, and its lower-most tip can be seen extending out the exit port at the bottom of the guide body 36.

[0084] In FIG. 3, the rotary-to-linear lifter 100 and the latch 120 are in their respective positions at the end of a firing (driving) stroke, and the latch 120 has its latching surface 124 in a location that will not interfere with the teeth 92 of the driver 90. This is necessary so that the driver 90 can make a linear stroke from its top-most position to its bottom-most position. However, the latch 120 will later be slightly rotated by the latch shaft 122 (which is spring-loaded) so that its catching surface 124 will be able to interfere with the teeth 92.

[0085] In the configuration depicted on FIG. 3, the fastener driving tool 10 has been used to drive a fastener, and the tool now must cause the driver 90 to be "lifted" back to its top-most position for a new firing (driving) stroke. This is accomplished by rotating the lifter 100, which is actuated by the motor 40, through its gearbox 42, etc.

[0086] As rotary-to-linear lifter 100 rotates counterclockwise (as seen in FIG. 3) at least one of its pins 104, 106, or 108 will come into contact with one of the teeth 92 along the left side (as seen in FIG. 3) of the driver 90. This will cause the driver 90 to be "lifted" upward (as seen in FIG. 3). As the lifter 100 rotates, one of the teeth 92 will be in contact with one of the rotating pins 104, 106, 108 throughout a portion of the rotational travel of the lifter, and the "next" pin will then come into contact with the "next" tooth 92 so that the driver 90 continues to be moved upward. This will remain true until the eccentric cam surface 110

comes into play, and since there are no "working" lifter pins protruding along that surface, the driver 90 will not continue to be driven upward while the eccentric cam surface 110 is positioned along the right portion (as seen in FIG. 3) of the rotary-to-linear lifter 100. However, when this occurs, the latch 120, which is spring-loaded, will have its latch catching surface 124 in a proper location to "catch" the closest tooth 92 along the right-hand side (as seen in FIG. 3) of the driver 90, thereby preventing the driver from falling downward for any significant distance. After this occurs, the "next" lifter pin (which will be the pin 104) will then come along and again make contact with one of the teeth 92 along the left-hand side (as seen in FIG. 3) of the driver 90, thereby continuing to lift the driver toward the top (as seen in FIG. 3) of the cylinder 71.

[0087] In the illustrated embodiment of the first embodiment fastener driving tool 10, the rotary-to-linear lifter 100 makes two complete rotations to lift the driver 90 from its bottom-most position to its top-most position. (The upper position is also sometimes referred to herein as the "ready position.") At the end of the second rotation, the parts will be configured as illustrated in FIG. 4. The piston 80 is once again near the top of the cylinder 71, and the combined volumes of the main storage chamber 74 and displacement volume 76 have now been reduced to a smaller volume, which means their gases are under a greater pressure, since the gas that was above the piston and in chamber 74 was compressed during the lift of the driver. (As noted above, the actual volume of the main storage chamber 74 does not change in the illustrated embodiment.) During the lift of the driver, the latch 120 was "engaged" with the teeth 92, however, the latch has a smooth surface in one direction that allows the teeth 92 to push the latch out of the way during the upward lift of the driver. This is much like a ratchet-type action, remembering that the latch is spring-loaded so as to act in this manner.

[0088] In FIG. 4, the "last" tooth 126 along the right-hand side (as seen in FIG. 4) of the driver 90 is engaged with the latch catching surface 124, and so latch 120 now prevents the driver from being moved downward (as seen in this view). The third pin 108 is still in contact with the lower-most tooth 92 along the left-hand side (as seen in FIG. 4) of the driver 90, at this point in the rotational travel of the rotary-to-linear lifter 100. There is a sensor which, in the illustrated embodiment, is a limit switch 130 (see FIG. 8), that detects the

rotational movements of the lifter 100. This sensor detects the fourth pin 114, as discussed below in greater detail.

[0089] When the sensor 130 detects the fourth pin 114 a first time (in this embodiment), the control system turns off the solenoid 46, which will then allow the latch 120 to engage the right-hand teeth (in these views) of the lifter 100. Note that the solenoid can also be turned off earlier during the lift, if desired. When sensor 130 detects this pin 114 a second time (in this embodiment), the current to the motor 40 is turned off, and the motor thus is de-energized and stops the lifting action of the driver 90. As described herein, the solenoid 46 acts as a latch actuator.

[0090] Due to the gas pressure above the piston 80, the driver/piston subassembly will drift downward (in these views) a small distance until the tooth 126 contacts the latch surface 124. This is the position illustrated in FIG. 4 of these components, and this configuration is considered to be the "rest" position of the tool. Although the gas pressure in the combined main storage chamber 74 and displacement volume 76 is at its maximum, the latch 120 prevents the driver from being moved further downward, so the piston is essentially locked in this position until something else occurs. In a preferred mode of the invention, the pressure vessel may be pressurized at about 100 PSIG to 120 PSIG.

[0091] When it is time to drive a fastener, the next action in the illustrated first embodiment is to cause the motor 40 to become energized once again. This occurs by two independent actions by the user: in some modes of the invention, these two independent actions can occur in either order. (There is also an optional "restrictive mode" of operation, in which the two independent actions must occur in a specific order.) These two actions are: pressing the nose 34 of the safety contact element 32 against a solid surface, and depressing the trigger actuator 54. The trigger actuator will cause the trigger switch 52 to change state, which is one condition that will start sending current to the motor 40. The safety contact element 32 has an upper arm 134 (see FIG. 8) that will be moved as the nose 34 is pushed into the tool 10, and this upper arm 134 will actuate another sensor which, in the illustrated embodiment, is a second limit switch 132 (see FIG. 8). When both of these actions are occurring simultaneously, current is delivered to the motor 40 which will once again turn the rotary-to-linear lifter 100 a short distance. Also, the controller will energize the solenoid 46, which will rotate the latch 120 a small angular distance clockwise (as seen in FIG. 5) to

disengage the latch catching surface 124 from one of the teeth 92 of the driver 90. More specifically, this would be the "last" tooth 126 as seen in FIG. 5. Note that FIGS. 6 and 7 show details of the same structure depicted in FIG. 5 at different perspective angles.

[0092] It should be noted that the rotary motion of the lifter 100 will cause a small upward movement of the driver 90 so that the latch 120 can easily disengage from the "last" tooth 126 of the driver 90. Thus, there will not be a binding action that might otherwise cause the mechanism to jam.

[0093] Now that all this has occurred, the latch 120 is in its disengaged position so that its catching surface 124 will not interfere with any of the teeth 92 along the right-hand side (as seen in FIG. 5) of the driver 90; also the eccentric cam surface 110 is now facing the teeth 92 along the left-hand side (as seen in FIG. 5) of the driver 90, and none of the three "working" pins of the lifter will interfere with those left-hand teeth 92. Once the driver tooth "drops off" the last lifting pin 108, the driver 90 is quickly thrust downward in a linear stroke, due to the high gas pressure within the main storage chamber 74 and displacement volume 76. (This is the "gas spring" effect.) Along the way, the driver 90 will pick up a fastener that is waiting at the feeder carriage 64, and drive that fastener along the back plate 66 to the exit area at the bottom (at the area 30 on FIG. 1). After this action has occurred, the driver 90 will be situated at its lower-most position, as viewed in FIG. 3.

[0094] The pressure of the gas in the combined main storage chamber 74 and displacement volume 76 is sufficiently high to quickly force the driver 90 downward, and such pneumatic means is typically much faster than a nail driving gun that uses exclusively mechanical means (such as a spring) for driving a fastener. This is due to the "gas spring" effect caused by the high gas pressure within the main storage chamber 74 and displacement volume 76 that, once the driver is released, can quickly and easily move the driver 90 in a downward stroke.

[0095] As the driver 90 is being moved downward, the piston 80 and the movable piston stop 82 are forcing air (or possibly some other gas) out of the cylinder venting chamber 94 that is below the piston. This volume of air is moved through a vent to atmosphere 150, and it is desired that this be a low resistance passageway, so as to not further impede the movement of the piston and driver during their downward stroke. The gas above the piston is

not vented to atmosphere, but instead remains within the displacement volume 76, which is also in fluidic communication with the main storage chamber 74.

[0096] One aspect of the present invention is to provide a rather large storage space volume to hold the pressurized gas that is also used to drive the piston downward during a driving stroke of the driver 90. There is a fluidic passage 152 between the upper portion of the cylinder and the main storage chamber 74. (In the illustrated first embodiment, the cylinder wall 70 does not extend all the way to the "top" cap 72.) It is preferred that the volume of the main storage chamber be larger than the total volume of the cylinder working spaces (i.e., the displacement volume) by a volumetric ratio of at least 2.0:1, and more preferably at least 3.0:1. This will allow for a powerful stroke, and a quick stroke.

[0097] The illustrated first embodiment of the present invention allows for both a quick firing (or driving) stroke time and also a fairly quick "lifting" time to bring the driver back to its upper position, ready for the next firing (driving) stroke. Both of these mechanical actions can sequentially occur in less than 340 milliseconds (combined time), and allow a user to quickly place fasteners into a surface. In one operating mode of the present invention, the human user can hold the trigger in the engaged position and quickly place a fastener at a desired location merely by pressing the nose (or "bottom") of the tool against the working surface to actuate the fastener driver and place the fastener. Then the user can quickly remove the fastener driver tool from that surface, and move it to a second position along the work surface, while still depressing the trigger the entire time, and then press the nose (or bottom) of the tool against the working surface at a different position, and it will drive a fastener at that "different" position. This is referred to as a "bottom fire" capability, and when using the illustrated embodiment it can occur virtually as fast as a human can place the tool against a surface, then pick up the tool and accurately place it against the surface at a different position, and thereby repeat these steps as often as desired until emptying the magazine of fasteners. This type of mode of operation will be discussed in greater detail below in connection with the logic flow chart starting at FIG. 13, with respect to the control system of the fastener driving tool 10.

[0098] Referring now to FIG. 8, another side sectional view is provided that shows some of the elements beneath the latch and other portions of the first embodiment fastener driving tool 10. There are two electromechanical limit switches 130 and 132. The limit switch 130

detects movements of the fourth pin 114 of the rotary-to-linear lifter 100 (as noted above). The limit switch 132 detects movement of the upper arm 134, which is a portion of the safety contact element 32 that is pushed rearward (or "up" in these views) with respect to the overall tool 10 when the nose of the tool is pressed against a working surface. These limit switches provide electrical input signals to the controller, which is discussed below in greater detail. It will be understood that other types of sensors could be used instead of electromechanical limit switches, such as optoelectrical sensors, or magnetic sensors, including a Hall-effect switch, or even a metal-sensing proximity switch.

[0099] Also viewed on FIG. 8 is a return spring 136, which causes the safety contact element 32 to be pushed back downward (in this view) once the user releases the nose of the tool 10 from the working surface. In addition, there is a depth of drive adjustment at 138.

[00100] Referring now to FIG. 9, further details of the solenoid are viewed. In FIG. 9, the solenoid 140 has a plunger 142 that will move linearly either in or out from the main coil body of the solenoid 140. When the solenoid is energized, it pulls the plunger 142 in toward the solenoid body 140, which rotates a solenoid arm 146 (part of the solenoid's "linkage"), which in turn rotates the latch shaft 122 that also rotates the latch 120 a small arcuate distance. This causes the latch 120 to disengage from the teeth 92 of the driver 90. On the other hand, when the solenoid 140 becomes de-energized, the plunger will be pushed out by the plunger spring 144, which will rotate the solenoid arm 146 a short distance, and that in turn rotates the latch shaft 122 and the latch 120. This will tend to cause the latch to engage the teeth 92 along the right-hand side (as seen in FIG. 5) of the driver 90. However, since this is a spring action, the teeth 92 can slide against the surface of the latch 120 and move the latch out of the way if the teeth are attempting to move upward along with the driver 90. However, the spring action of the solenoid plunger spring will be strong enough to push the latch 120 into its engaged position, and any teeth 92 attempting to move downward will be caught by the catching surface 124 of the latch 120.

[00101] This "catching" action of the latch 120 has more than one benefit. In the first place, the latch holds the tooth 126 (which is the "bottom tooth" along the right-hand side of the driver as seen in FIG. 5) in place when the piston has been lifted to its top or "firing" position. The driver cannot be fired until the latch 120 is moved out of the way, as discussed above. On the other hand, if there is some type of jam or an improper use of the tool by a

user such that the driver 90 does not totally complete its travel during a firing (driving) stroke, the latch 120 will also prevent a misfire from occurring at an inconvenient time.

[00102] More specifically, if the driver jams during a drive stroke, and if a person tries to clear the jam, and if there was no precaution taken to prevent the remainder of the stroke from occurring at that moment, then possibly an injury could occur when the driver 90 suddenly becomes released from its jammed condition. In other words, a fastener could be driven during the attempt to clear the jam, and that fastener would likely be directed somewhere that is not the original target surface. In the present invention, the latch 120 will have its solenoid 140 become de-energized once the jam occurs (because solenoid 140 will de-energize after a "timeout" interval occurs), and therefore the latch 120 will be engaged and the catching surface 124 will be in a position to interfere with the downward movement of the driver teeth 92. By use of this configuration, the driver could only move a short distance even if the jam was suddenly cleared, because the latch catching surface 124 will literally "catch" the "next" tooth 92 that unexpectedly comes along during a downward travel of the driver 90. This makes the tool much safer in situations where a complete driver stroke has not occurred.

[00103] The process for controlling the solenoid and the moments when the solenoid will either be energized or de-energized are discussed below in connection with the flow chart that begins on FIG. 13.

[00104] With respect to various types of firing (or driving) modes, a "trigger fire" mode is where the user first presses the tool nose against a working surface, and then depresses the trigger actuator 54. It is the trigger being depressed that causes the drive stroke to occur in this situation. With respect to a "bottom fire" mode, the trigger is actuated first, and then the user presses the nose of the tool against a work surface, and it is the work surface contact that causes the drive stroke to occur. As discussed above, the user can continue to hold the trigger down while pressing against and releasing the tool from the work surface multiple times, and obtain quick multiple firing strokes (or driving strokes), thereby quickly dispensing multiple fasteners into the working surface at various locations.

[00105] There is also an optional "restrictive firing mode," in which the nose of the tool must be first placed against a working surface before the trigger is pulled. If the sequence of events does not unfold in that manner, then the drive stroke will not occur at all.

This is strictly an optional mode that is not used by all users, and certainly in not all situations.

[00106] With regard to alternative embodiments of the present invention, an exemplary fastener driving tool can be made with a main storage chamber volume of about twelve cubic inches and a cylinder displacement volume of about 3.75 cubic inches. This would provide a volumetric ratio of the main storage chamber versus the displacement volume of about 3.2:1. As discussed above, it is desirable for the volumetric ratio of the main storage chamber's volume to the displacement volume to be at least 2.0:1, and it could be much higher if desired by the fastener driving tool's designer.

[00107] The working pressure in the system could be around 120 PSIG, and should probably be at least 100 PSIG for a quick-firing tool. By the term "working pressure" the inventors are referring to the pressure in the displacement volume 76 (and main storage chamber 74) at the time the piston 80 is at its "ready" position, which is when it is at (or proximal to) its uppermost travel position as illustrated in FIGS. 2-5.

[00108] It should be noted that other gases besides air can be used for the main storage chamber and the displacement volume, if desired. While air will work fine in many or most applications, alternative gases could be used as the "charge gas," such as carbon dioxide or nitrogen gas. Moreover, the use of nitrogen gas can have other benefits during the manufacturing stage, such as for curing certain adhesives, for example.

[00109] In the illustrated first embodiment, there is no fill valve on the fastener driving tool 10 at the storage tank (main storage chamber) 74. This is a preferred mode of the present invention, although an optional fill valve could be provided, if desired by a tool designer. The design of the preferred mode of the present invention is such that the charge gas should not significantly leak from the tool, and therefore a fill valve would not be required.

[00110] Another feature of the present invention is that a variable stroke is possible by causing the rotary-to-linear lifter 100 to be rotated a multiple number of times to create a shorter or longer firing (driving) stroke, if desired. In the illustrated first embodiment, the lifter 100 makes a complete rotation two times to lift the piston from its lower-most position to its top-most position. This number of rotations of the lifter could be increased to three times or four times if desired, or even could be decreased to a single turn for a shorter stroke tool, if desired.

[00111] Another possible variation is to use a composite sleeve for the internal cylinder wall 70, which would make contact with the seals of the piston 86. In addition, the outer pressure vessel wall 78 could also be made of a composite material, if desired. The use of a carbon fiber composite, for example, would decrease weight, but would maintain the desired strength.

[00112] Referring now to FIG. 10, some of the details of a first piston arrangement are illustrated in cross-section for one of the embodiments of the present invention. The piston is depicted at the reference numeral 80. A piston seal 86 is near the upper end (in this view) of the piston 80, and a piston scraper 89 is near the lower end (in this view) of the piston. A piston guide ring 88 is located at a central region of the piston, and essentially surrounds that middle portion of the piston.

[00113] Referring now to FIG. 11, some of the details of a second piston arrangement are illustrated in cross-section for an alternative embodiment of the present invention. The second embodiment piston is designated by the reference number 180. There are upper and lower seals at 182 and 184, respectively. Between these seals is an annular space 186 that is at least partially filled with lubricating fluid, such as oil. This oil will tend to lubricate the movements of the piston 180 along the inner surface of the alternative cylinder wall 170. The seals 182 and 184 are designed to hold the oil 188 within the annular space 186 indefinitely, or at least to lose the oil only at a very slow rate.

[00114] Referring now to FIG. 12, the opposite side (compared to FIGS. 3-5) of the rotary-to-linear lifter 100 is illustrated. The three pins 104, 106, and 108 are directly seen in this view, and this is the "working side" of those three pins, which make contact with the teeth 92 of the driver 90. FIG. 12 shows the positional relationship of these three pins with respect to the lifter 100 and the center position for the lifter drive shaft 102, in an exemplary embodiment of the present invention. In addition, FIG. 12 shows the semi-circular outer shape of a first part of the perimeter of the lifter at 116, and the more elliptical outer shape of a second part of the perimeter of the lifter at 110, as discussed above. The outer shape of the perimeter portions (at 110 and 116) define an outer perimeter of a surface from which these pins 104, 106, and 108 protrude.

[00115] Referring now to FIG. 13, a logic flow chart is provided to show some of the important steps used by a system controller for the fastener driving tool 10 of the illustrated

embodiment for the present invention. Starting at an initializing step 200, a step 202 loads registers with predetermined values, and a step 204 loads special function registers with predetermined values. A step 206 now "checks" the RAM (Random Access Memory) to be sure it is functioning properly, and then a step 208 clears the RAM. A step 210 now loads unused RAM with predetermined values, based on the software coding for the system controller (typically in firmware or hard-coded).

[00116] A step 212 now determines the stability of the system electrical power supply. And then a step 214 initializes the interrupts that will be used for the controller. The controller is now ready to enter into an operational routine.

[00117] At a step 220, the control logic enters a "FIRST 1" routine. A decision step 240 now determines whether or not a "mode" selector switch has been activated. (Note, this mode switch would typically be only an optional feature for a driving tool 10, and many tools will not include this mode switch at all.) If the answer is NO, then the logic flow is directed to a decision step 222. On the other hand, if the mode selector switch was turned "on," then the logic flow is directed to a step 242 in which the tool enters a "restrictive fire" routine. The logic flow is directed now to a decision step 244 that determines if the trigger has been pulled. If the answer is NO, then the logic flow is directed to a decision step 224. On the other hand, if the trigger has been pulled, then the logic flow is directed to a step 246 that will further direct the logic flow to the "STOP 1" function (or routine) at step 380 on FIG. 15. It should be noted that, in the "restrictive fire" mode of operation, the trigger cannot be pulled first; instead the nose of the fastener driving tool must be pushed against the solid surface before the trigger is pulled.

[00118] If the answer at step 240 was NO, the decision step 222 now determines whether or not the trigger has been pulled. If the answer is YES, the logic flow is directed to a step 230 in which the logic flow enters a "TRIGGER" routine. A step 231 turns on a "work light" which is a small electric lamp (e.g., an LED) that illuminates the workpiece where the fastener is to be driven.

[00119] A decision step 232 now determines whether or not a predetermined timeout has occurred, and if the answer is YES, a step 234 directs the logic flow to a "STOP 1" routine, that is illustrated on FIG. 15 at a step 380. What this actually means is that a user pulled the trigger, but then did not actually use the tool against a solid surface, and rather than

having the tool ready and primed to fire a fastener at any moment for an indefinite period of time, a predetermined amount of time will pass (i.e., the "timeout" interval), and once that has occurred, the system will be basically deactivated in the STOP 1 mode. This is not a permanent stoppage of the functioning of the tool, but is only temporary. Note that the "timeouts" are interrupt driven, in an exemplary embodiment of the present invention.

[00120] If the timeout has not occurred at decision step 232, then a decision step 236 determines if the safety has been actuated. If the answer is NO, then the logic flow is directed back to the FIRST 1 routine 220. On the other hand, if the safety has been actuated at step 236, then the logic flow is directed to a step 238 that will send the logic flow to a "DRIVE" routine, which is on FIG. 14 at a step 260. This will be discussed below in greater detail.

[00121] If, either at step 222 or step 244, the trigger was not yet pulled, then the logic flow is directed to the decision step 224. When the logic flow reaches decision step 224, the logic now determines whether or not the safety has been actuated. This step determines whether or not the safety contact element 32 has been pressed against a solid object to an extent that actuates the sensor (e.g., limit switch 132), which means that the tool is now pressed against a surface where the user intends to place a fastener. If the answer is NO, the logic flow is directed back to the mode switch query at decision step 240. However, if the answer is YES, the logic flow is directed to a step 250 in which the controller enters a "SAFETY" routine.

[00122] Once at the SAFETY routine at step 250, a step 251 turns on the "work light," which is the same lamp/LED that was discussed above in reference to step 231. A decision step 252 now determines whether or not a timeout has occurred, and if the answer is YES, the logic flow is directed to a step 254 that directs the logic flow to the "STOP 1" function at step 380 on FIG. 15. This temporarily stops the tool from operating. On the other hand, if the timeout has not yet occurred, the logic flow is directed to a decision step 256 that determines whether the trigger has been pulled. If the answer is NO, the logic flow is directed back to the decision step 224. On the other hand, if the answer is YES, the logic flow is directed to a step 258 that causes the tool to enter the "DRIVE" mode of operation at step 260 on FIG. 14.

[00123] As can be seen by reviewing the flow chart of FIG. 13, unless the tool 10 is in the restrictive fire mode (at step 242), the tool can be actuated with either one of the two

important triggering steps occurring first: i.e., the trigger could be pulled before the safety is actuated, or vice versa.

[00124] Referring now to FIG. 14, the logic flow from FIG. 13 is directed to the "DRIVE" routine 260 from two other steps on FIG. 13: these are step 238 and step 258. Once at the DRIVE routine 260, a switch debounce step 262 is executed to determine whether or not one or both of the triggering elements was somehow only actuated intermittently. If so, the system designers have determined that the tool should not operate until it is more certain that the input switches have actually been actuated. To do this, the logic flow is directed to a decision step 264 to determine if the safety is still actuated. If the answer is NO, then the logic flow is directed to a step 266 that sends the logic flow back to the SAFETY routine at step 250. On the other hand, if the safety still is actuated at step 264, then the logic flow is directed to a decision step 270 to determine if the trigger is still being pulled. If the answer is NO, then the logic flow is directed to a step 272 that sends the logic flow back to the TRIGGER routine at step 230.

[00125] On the other hand, if decision steps 264 and 270 are both answered affirmatively, then a step 280 clears the operational timers, and the logic flow is then directed to a decision step 282 that determines if the software code flow is within certain parameters. This is a fault-checking mode of the software itself, and if the system does not determine a satisfactory result, then the logic flow is directed to a step 284 that sends the logic flow to a "STOP" routine at a step 370 on FIG. 15. This will ultimately turn the tool off and require a safety inspection of the tool, or at least have the tool reset. However, the tool does not need to be completely disabled, and after the safety inspection and tool reset procedure, the tool will be ready to use again without being sent to a service center. In an exemplary mode of the invention, the code flow check step determines if a correct number resides in a register or memory location; this number is the result of being incremented at predetermined executable steps of the software for the system controller.

[00126] If the software code flow check is within acceptable parameters at decision step 282, then the logic flow is directed to a step 290 that turns on the motor, and then a step 292 that turns on the solenoid. A step 294 now starts the solenoid timer and a step 296 now starts the motor run timer. As will be discussed below, these timers will be periodically checked by the system controller to make sure that certain things have occurred while the

solenoid is on and while the motor is running. Otherwise, after a predetermined maximum amount of time, the motor will be turned off and the solenoid will be turned off due to these timers actually timing out, which should not occur if the tool is being used in a normal operation, and if the tool is functioning normally.

[00127] In addition to the solenoid and motor run timers discussed above, a "dwell timer" is used to allow the tool to begin its normal operation before any further conditions are checked. This is accomplished by a decision step 298 on FIG. 14, which causes the logic flow to essentially wait a short amount of time before continuing to the next logic steps.

[00128] Once the dwell timer has finished at step 298, the logic flow is directed to a decision step 300 that determines if the solenoid "on time" has been exceeded. If the answer is YES, the logic flow is directed to a step 302 that turns off the solenoid. This situation does not necessarily mean the tool is being misused or is not functioning properly, and therefore the logic flow does not travel to a "stop step" from the step 302. Instead, the logic flow is directed to a decision step 304, discussed below.

[00129] If the solenoid on time has not been exceeded, then the logic flow also is directed to the decision step 304, which determines if the cam limit switch has received a first signal. This is the limit switch 130 that detects the presence or absence of the fourth pin 114 of the lifter. If the tool of the illustrated embodiment is being used, the lifter 110 will make two complete rotations when lifting the driver and piston from their bottom-most positions to their top-most positions. Therefore, the cam limit switch 130 will receive two different signals during this lift. Step 304 determines if the first signal has occurred. If not, then a decision step 310 determines whether the motor timeout has occurred. If the answer is NO, then the logic flow is directed back to decision step 300. On the other hand, if the motor run timer has indeed timed out, then the logic flow is directed to a step 312 that sends the logic flow to a "STOP" routine at step 370. This would likely indicate that there is a problem with the tool, or a problem with the way the user is attempting to operate the tool.

[00130] Referring back to decision step 304, if the first signal from the cam has occurred, then the logic flow is directed to a step 306 that turns off the solenoid. This will allow the latch 120 to engage the teeth 92 of the driver 90, in case there has been some type of jam, or other type of unusual operation while the driver and piston are being lifted. It also allows the latch 120 eventually to properly engage the bottom-most tooth 126 of the driver,

which is the normal operation once the driver and piston have been raised to their top-most (or firing) position.

[00131] The logic flow is now directed to a decision step 320 that determines whether a second signal has been received from the cam limit switch. If the answer is NO, then the logic flow is directed to a decision step 322 that determines whether or not the motor run timer has timed out. If the answer is NO, then the logic flow is directed back to decision step 320. On the other hand, if the motor timer has timed out, the logic flow is directed to a step 324 that directs the logic flow to the "STOP" routine at 370, and indicates that there is some type of problem.

[00132] Once decision step 320 determines that the second signal from the cam has been received, then the logic flow is directed to a step 330 that turns off the motor, then to a step 332 that starts a "reset" timeout referred to as "all switches on." In this mode, it is either assumed that both the actuation (input) devices are still actuated, or at least that the controller needs to make an examination of those input devices to see what the proper status of the tool should be. Accordingly, the logic flow is directed to a decision step 340 that determines if the safety is still actuated. If the answer is NO, then the logic flow is directed to a step 342 that then sends the logic flow to the "FIRST 1" routine at step 220 on FIG. 13. On the other hand if the safety is still actuated, the logic flow is directed to a decision step 350 that determines if the trigger is still pulled. If the answer is NO, then the logic flow is directed to a step 352 that also directs the logic flow to the "FIRST 1" step at 220 on FIG. 13. Finally, if the trigger is still pulled, then a decision step 360 determines whether or not a "reset" timeout has occurred, and if the answer is YES, the logic flow is directed to a step 362 that sends the logic flow to the "STOP 1" routine at step 380 on FIG. 15. If the reset timeout has not yet occurred at step 360, then the logic flow is directed back to the decision step 340 and the inspection of all of the switches will again be performed.

[00133] The logic flow is continued on FIG. 15, in which there are two different types of stop routines. The routine called "STOP" at step 370 will first turn off the motor at a step 372, turn off the solenoid at a step 374, and turn off the work light at a step 376. The STOP routine will then clear the timers at a step 378. The logic flow then becomes a "DO-Loop," and continues back to the STOP routine at step 370. This is a fault mode, and the tool must be inspected. As a minimum, it needs to be reset to terminate the DO-Loop processing of the

software, which means that the battery must be disconnected from the tool. If the user has been using the tool properly, this may be an indication that there is some operational problem with the tool itself, or that a fastener perhaps has jammed somewhere in the tool and the operator did not notice that fact.

[00134] The other type of STOP routine is the "STOP 1" routine at step 380. Once that occurs, a step 382 turns off the motor, turn off the solenoid at a step 384, and turn off the work light at a step 386. The STOP 1 routine will then clear the timers at a step 388, and a decision step 390 determines whether or not the trigger is still pulled. If the answer is YES, then the logic flow is directed back to the STOP 1 routine at step 380. If the trigger is not pulled at step 390, the logic flow is then directed to a decision step 392 that determines if the safety is still actuated. If YES, the logic flow is directed back to the STOP 1 routine at step 380. However, if the safety is not actuated, the logic flow is directed to a step 398 that sends the logic flow to the "FIRST 1" routine at step 220 on FIG. 13. At this point, the tool has been successfully used, and is ready for the next firing (driving) actuation.

[00135] Referring now to FIG. 16, a second embodiment of a fastener driving tool is generally designated by the reference numeral 401. Tool 401 is mainly designed to linearly drive fasteners such as nails and staples. Tool 401 includes a handle portion 403, a fastener driver portion 405, a fastener magazine portion 407, and a fastener exit portion 409.

[00136] A "right" outer cover or "housing" of the driver portion is indicated at 411. A "top" cover is indicated at 412, while a "front" outer cover of the driver portion is indicated at 413. A "rear" cover for the handle portion is indicated at 415 (which is also the battery pack cover), while a "rear" cover of the magazine portion is indicated at 416. It will be understood that the various directional nomenclature provided above is with respect to the illustration of FIG. 16, and the second embodiment fastener driving tool 401 can be used in many other angular positions, without departing from the principles of the present invention.

[00137] The area of the second embodiment tool 401 in which a fastener is released is indicated approximately by the reference numeral 417, which is the "bottom" of the fastener exit portion of tool 401. Before the tool is actuated, a safety contact element 418 extends beyond the bottom 417 of the fastener exit, and this extension of the safety contact element is depicted at 419, which is the bottom or "front" portion of the safety contact element. Other elements that are depicted in FIG. 16 include an upper guide body 421 and a front cover 423;

the upper guide body generally is in mechanical communication with the magazine portion 407.

[00138] Reference numeral 445 indicates a magazine housing, while reference numeral 447 indicates a fastener track through which the individual fasteners run while they remain within the magazine portion 407. A feeder carriage 448 (see FIG. 18) is used to feed an individual fastener from the magazine into the drive mechanism area, and a back plate 449 is used to carry an individual fastener while it is being driven. In the illustrated embodiment, the feeder carriage 448 positions a fastener to a position within the upper guide body 421 that is coincident with the path of the driver member 490 (see FIG. 20), so that when the driver 490 moves through a driving stroke, its driving end will basically intercept the fastener and carry that fastener to the exit end of the tool 401, essentially at the bottom portion 417 of the tool's exit area.

[00139] The second embodiment fastener driving tool 401 also includes a motor 427 (see FIG. 17) which acts as a prime mover for the tool, and which has an output that drives a gearbox 428 (see FIG. 17). An output shaft 429 (see FIG. 17) of the gearbox drives a lifter drive shaft 402 (see FIG. 27). A solenoid 431 (see FIG. 17) is included in tool 401, and further details of its operation are discussed below. A battery 433 is attached near the rear of the handle portion 403, and this battery provides electrical power for the motor 427 as well as for a control system.

[00140] A printed circuit board (see FIG. 17) that contains a controller is generally designated by the reference numeral 435, and is placed within the handle portion 403 in this embodiment. A trigger switch 437 (see FIG. 17) is activated by a trigger actuator 439. As can been seen by viewing FIG. 16, the handle portion 403 is designed for gripping by a human hand, and the trigger actuator 439 is designed for linear actuation by a person's finger while gripping the handle portion 403. Trigger switch 437 provides an input to the control system 435.

[00141] A three-position selector switch, acting as a "mode" control switch, is mounted on tool 401 at 441. This switch 441 allows the user (the tool's operator) to select an operating "Mode A" or an operating "Mode B", or to turn the tool OFF. These operating modes are described in detail below, and in conjunction with logic flow charts in the drawings.

[00142] There also are one or more light-emitting diodes (LEDs) 443 mounted on tool 401, which provides an indication as to certain functions of the tool. This is described below in greater detail, in the description of the logic flow charts. There are also other input devices for the controller, however those input devices are not seen in FIG. 16.

[00143] The controller at 435 will typically include a microprocessor or a microcomputer device that acts as a processing circuit. At least one memory circuit will also typically be part of the controller, including Random Access Memory (RAM) and Read Only Memory (ROM) devices. To store user-inputted information (if applicable for a particular tool model), a non-volatile memory device would typically be included, such as EEPROM, NVRAM, or a Flash memory device.

[00144] Referring now to FIGS. 19 and 20 (which are similar to FIGS. 2 and 3), a working cylinder subassembly is designated by the reference numeral 453, and this is included as part of the fastener driver portion 405. The working cylinder 453 includes a cylinder wall 451, and within this cylinder wall 451 is a movable piston 458. Further details of this piston arrangement are illustrated in FIG. 28, described below. Surrounding the cylinder wall 451, in the illustrated second embodiment, is a main storage chamber 454 (also sometimes referred to herein as a “pressure vessel storage space”) and an outer pressure vessel wall 456 (which corresponds to the "front" cover 413 of FIG. 16, along the right portion of this view). At the top (as seen in these views) of the fastener driver portion 405 is an upper end portion at 455 for the cylinder mechanism.

[00145] Also within the fastener driver portion 405 are mechanisms that will actually drive a fastener into a solid object. This includes a driver 490, a cylinder “venting chamber” 492 beneath the piston 458 (which would typically always be at atmospheric pressure), a driver track (not seen in this view; however, see FIG. 21 at 494), a rotary-to-linear lifter 400, and a latch 420. The driver 490 is also sometimes referred to herein as a "driver member" and the rotary-to-lifter 400 is also sometimes referred to herein as a "lifter member," or simply as a "lifter." Driver 490 is rather elongated, and as an individual element can best be seen in FIGS. 23 and 24. There are multiple “teeth” 491 that are positioned along the driver. In the illustrated embodiment, these teeth 491 are spaced-apart not only in a transverse direction from the elongated centerline of driver 490, but they are also spaced-apart from one

another along the outer longitudinal edges of the driver 490. The positions of teeth 491 are clearly illustrated in FIG. 24.

[00146] It will be understood that the precise positions for the teeth 92 and 491 could be different from those illustrated for the driver 90 or 490, without departing from the principles of the present invention. It will also be understood that the precise shapes of teeth 92 and 491 could be different from those illustrated for the driver 90 or 490, without departing from the principles of the present invention. It will be further understood that the longitudinal edges of the driver elements 90 and 490 do not necessarily have to be linear or straight, although a straight edge is probably the simplest to construct and use. Moreover, the longitudinal edges of the driver elements 90 and 490 do not necessarily need to be parallel to one another, or parallel to the longitudinal axis of the driver itself, although again, such parallel construction is probably the simplest to build and use.

[00147] There is a cylinder base 493 that mainly separates the gas pressure portions of the fastener driver portion 405 from the mechanical portions of that driver portion 405. The venting of air from the cylinder venting chamber 492 passes through the cylinder base 493, as seen at a vent 450 on FIG. 20. The mechanical portions of FIG. 20 begin with a rotary-to-linear lifter 400 which was briefly mentioned above, along with a lifter drive shaft 402. Drive shaft 402 protrudes through the center portions of the fastener driver portion 405 and through the center of the lifter 400, and this shaft is used to rotate the lifter, as desired by the control system. (See also FIG. 27.)

[00148] Lifter 400 can be designed with an entirely circular outer perimeter, or it can have a different shape. In the first embodiment of FIGS. 1-12, lifter 100 was arcuate and portions of its perimeter exhibited an eccentric shape of a cam (see FIG. 2). A portion of the lifter's outer perimeter was mainly circular for about half of a circle (designated by the reference numeral 116), but the other half of the lifter's outer perimeter was more eccentric, which provided an elliptical surface (designated by the reference numeral 110). In the second embodiment of FIGS. 16-29, the outer shape of lifter 400 is still illustrated as half-circular and half-eccentric. However, it will be understood that the lifter's exact outer shape is not important, so long as it provides a base to hold in place certain protrusions (or "pins") that will make physical contact with teeth on the driver 490, but in a manner that creates a

discontinuous contact surface with those teeth. This will be discussed below in greater detail. (See, for example, FIGS. 30-33.)

[00149] The rotary-to-linear lifter 400 includes three cylindrical protrusions (or "extensions") that will also be referred to herein as "pins." The first such pin ("pin 1") is designated 404, the second pin ("pin 2") is designated 406, while the third pin ("pin 3") is designated 408. (See, FIG. 29.) These pins are mainly not visible on FIG. 19, since they face away from the viewer of this FIG. 19.

[00150] It should be noted that FIGS. 19 and 20 do not show a "boss portion" of the three pins 404, 406, and 408, (as did pins 104, 106, and 108 on FIG. 3), since such boss portions of the pins 404, 406, 408 are not entirely necessary for the proper functioning of the rotary-to-linear lifter 400. Instead, the surface of the lifter 400 may be perfectly smooth (e.g., flat) at those locations rather than exhibiting a "boss."

[00151] It should be understood that the "working side" of these three pins 404, 406, and 408 is on the opposite side of the lifter 400 in the view of FIG. 20. When discussing these pins 404, 406, and 408 with respect to FIG. 20 in this written description, it is with reference to the non-protruding side of those pins; however, the effects of the "working side" of those pins is discussed in some detail with respect to other structures that are also illustrated on FIGS. 20-25.

[00152] It should also be noted that pins 404, 406, and 408 are illustrated as having circular cross-sectional shapes, which is desirable for this embodiment, although other cross-sectional shapes could instead be used without departing from the principles of the present invention. For example, the pins could have a smooth arcuate outer surface along the portions that will come into contact with the protrusions or "teeth" of the lifter 490, and the remaining portion of the outer surface of the pins could exhibit a sharp angular cut-off edge, that for example, would have the appearance of a slice of pie. This alternative shape can apply both to the pins 104, 106, and 108 of the first embodiment and to the pins 404, 406, and 408 of the second embodiment, without departing from the principles of the present invention. Moreover, the pins do not necessarily need to protrude from the lifter surface at right angles.

[00153] In the first embodiment of FIGS. 1-12, there was a fourth cylindrical pin ("pin 4") that protruded from the opposite side of the lifter 100, designated pin 114. In this second

embodiment of FIGS. 16-29, there is no fourth pin at all. Instead a small permanent magnet at 414 is placed in the lifter 400. A Hall effect sensor (described below) is used to sense the movements of this magnet 414, and thus the movements of lifter 400.

[00154] The latch 420 that was briefly noted above is depicted on FIG. 20, and has a latch shaft 422 protruding therethrough, and this shaft rotates the latch 420 as determined by the controller. Latch 420 includes a latch "catching surface" at 424 (see FIG. 22), and this will be more fully explained below.

[00155] In FIG. 19, the piston 458 depicted at or near its uppermost or top-most position (in this view), and a gas pressure chamber 457 can be seen above the top-most area of the piston, near the top piston seal 482 (see FIG. 28). It will be understood that the gas pressure chamber 457 and the main storage chamber (or storage space) 454 are in fluidic communication with one another. It will also be understood that the portion to the interior of the cylinder wall 451 forms a displacement volume that is created by the stroke of the piston 458. In other words, the gas pressure chamber 457 is not a fixed volume, but this chamber will vary in volume as the piston 458 moves up and down (as seen in FIGS. 19 and 20). As noted above, this type of mechanical arrangement is often referred to as a "displacement volume," and that terminology will mainly be used herein for this non-fixed volume 457.

[00156] In FIG. 20, the piston 458 is piston is depicted at or near its bottom-most travel position (in this view), and a gas pressure chamber 457 can be seen above the top-most area of the piston. It will be understood that the gas pressure chamber 457 and the main storage chamber (or storage space) 454 are in fluidic communication with one another. It will also be understood that the portion to the interior of the cylinder wall 451 forms a displacement volume that is created by the stroke of the piston 458. In other words, the gas pressure chamber 457 is not a fixed volume, but this chamber will vary in volume as the piston 458 moves up and down. This type of mechanical arrangement is often referred to as a "displacement volume," and that terminology will mainly be used herein for this non-fixed volume 457.

[00157] It will be further understood that the main storage chamber 454 preferably comprises a fixed volume, which typically would make it less expensive to manufacture; however, it is not an absolute requirement that the main storage chamber actually be of a fixed volume. It would be possible to allow a portion of this chamber 454 to deform in size

and/or shape so that the size of its volume would actually change, during operation of the present invention, without departing from the principles of the present invention.

[00158] In the illustrated embodiment for the second embodiment fastener driving tool 401, the main storage chamber 454 substantially surrounds the working cylinder 453. Moreover, the main storage chamber 454 is annular in shape, and it is basically co-axial with the cylinder 453. This is a preferred configuration of the illustrated second embodiment, but it will be understood that alternative physical arrangements could be designed without departing from the principles of the present invention.

[00159] For example, FIG. 34 illustrates a fastener driver mechanism 714 in which a main storage chamber 774 is not co-axial with a working cylinder 771 of the fastener driving tool, which is generally designated by the reference numeral 710. In other words, storage chamber 774 does not substantially surround the working cylinder 771, and instead is located off to one side of this working cylinder. This arrangement allows for various physical component arrangements of the tool 710, and offers a different possible center of mass, which might be advantageous for some special applications.

[00160] In FIG. 34, the main storage chamber 774 has an outer pressure vessel wall 778, and the working cylinder 771 has a cylinder wall 770. These two spaces 774 and 771 are pneumatically in communication with one another by way of a passageway 752, near the top (in this view) of the working cylinder, at 772. Within cylinder wall 770 is a movable piston 780 (not visible in this view), which can be constructed in a similar manner to the movable piston 458 illustrated in FIG. 28, described above. Also within the fastener driver portion 714 is a driver member 790 (not visible in this view), which can be constructed in a similar manner to the driver 490 illustrated in FIGS. 23 and 24, and described above.

[00161] A cylinder base 796 separates the gas pressure portions of the fastener driver portion 714 from the mechanical portions of that fastener driver portion 714. The tool 710 can include a handle portion (not shown), a fastener magazine portion 407 (not shown), and a fastener exit portion 718. The remaining parts of tool 710 can be very similar, or identical, to other parts of the second embodiment too1 401, illustrated in FIGS. 16-29.

[00162] Referring again to FIG. 20, the piston 458 is depicted near or at its bottom-most travel position, and in this configuration, the displacement volume 457 and the main storage chamber 454 are at their largest combined volumes, while the cylinder venting

chamber 492 is at its minimum volume. This bottom position is also sometimes referred to herein as the "driven position." In FIG. 20, movable piston 458 is now in contact with the stationary piston stop 463, which is why the cylinder venting chamber 492 is at its minimum (or zero) volume. In FIG. 20, the driver 490 is also at its bottom-most travel position, and its lower-most tip can be seen extending out the exit port at the bottom of a lower guide body 425.

[00163] In FIG. 20, the rotary-to-linear lifter 400 and the latch 420 are in their respective positions at the end of a firing (driving) stroke, and the latch 420 has its latching surface 424 in a location that will not interfere with the teeth 491 of the driver 490. This is necessary so that the driver 490 can make a driving stroke from its top-most position to its bottom-most position (see also, FIG. 22). However, the latch 420 will later be slightly rotated by the latch shaft 422 (which is spring-loaded) so that its catching surface 424 will be able to interfere with the teeth 491.

[00164] In the configuration depicted on FIG. 20, the fastener driving tool 401 has been used to drive a fastener, and the tool now must cause the driver 490 to be "lifted" back to its top-most position for a new firing (driving) stroke. This is accomplished by rotating the lifter 400, which is actuated by the motor 427, through its gearbox 428, etc.

[00165] As rotary-to-linear lifter 400 rotates counterclockwise (as seen in FIG. 20) at least one of its pins 404, 406, or 408 will come into contact with one of the teeth 491 along the left side (as seen in FIG. 20) of the driver 490. This will cause the driver 490 to be "lifted" upward (as seen in FIG. 20) in a "return" stroke. As the lifter 400 rotates, one of the teeth 491 will be in contact with one of the rotating pins 404, 406, 408 throughout a portion of the rotational travel of the lifter, and the "next" pin will then come into contact with the "next" tooth 491 so that the driver 490 continues to be moved upward. This lifting procedure will continue until the controller determines that the driver has been moved to its proper position for a new driving stroke. When this occurs, the latch 420, which is spring-loaded, will have its latch catching surface 424 in a proper location to "catch" the closest tooth 491 along the right-hand side (as seen in FIG. 20) of the driver 490, thereby preventing the driver from falling downward for any significant distance. After this occurs, the "next" lifter pin (which will be the pin 404) will then come along and again make contact with one of the

teeth 491 along the left-hand side (as seen in FIG. 20) of the driver 490, thereby continuing to lift the driver toward the top (as seen in FIG. 20) of the cylinder 453.

[00166] In the illustrated embodiment of the second embodiment fastener driving tool 401, the rotary-to-linear lifter 400 makes two complete rotations to lift the driver 490 from its bottom-most position to its top-most position. (The upper position is also sometimes referred to herein as the "ready position.") At the end of the second rotation, the parts will be configured as illustrated in FIG. 21. The piston 458 will again be near the top of the cylinder 453, and the combined volumes of the main storage chamber 454 and displacement volume 457 have now been reduced to a smaller volume, which means their gases are under a greater pressure, since the gas that was above the piston and in chamber 454 was compressed during the lift of the driver. (As noted above, the actual volume of the main storage chamber 454 does not change in the illustrated embodiment.) During the lift of the driver, the latch 420 was "engaged" with the teeth 491, however, the latch has a smooth surface in one direction that allows the teeth 491 to push the latch out of the way during the upward lift of the driver. This is much like a ratchet-type action, remembering that the latch is spring-loaded (and thus has a mechanical bias) so as to act in this manner.

[00167] At the end of the piston's normal upward movement, the "last" tooth along the right-hand side (as best seen in FIG. 23) of the driver 490 is engaged with the latch catching surface 424, and so latch 420 now prevents the driver from being moved downward (as seen in this view). (This is similar to the arrangement of components depicted in FIG. 4, for the first embodiment.) The third pin 408 is still in contact with the lower-most tooth 491 along the left-hand side of the driver 490, at this point in the rotational travel of the rotary-to-linear lifter 400. There is a sensor which, in the illustrated embodiment, is a Hall effect sensor 430 (see FIG. 25) that detects the rotational movements of the lifter 400. This sensor detects the magnet 414, as discussed below in greater detail.

[00168] When the sensor 430 detects the magnet 414 a first time (in this second embodiment), the control system turns off the solenoid 431, which will then allow the latch 420 to engage the right-hand teeth (in these views) of the lifter 400. Note that the solenoid can also be turned off earlier during the lift, if desired. When sensor 430 detects this magnet 414 a second time (in the second embodiment), the current to the motor 427 is turned off, and

the motor thus is de-energized and stops the lifting action of the driver 490. As described herein, the solenoid 431 acts as a latch actuator.

[00169] In the second illustrated embodiment tool 401, the latch surface 424 is not in contact with the driver teeth 491 when the driver 490 has been moved to its “ready” position. In this second illustrated embodiment, the gearbox 428 has an attribute by which it essentially is self-locking from its output side (i.e., from its output shaft 429), and this prevents the lifter 400 from allowing the driver 490 to move "backward," which is the "down" direction in FIG. 21. Therefore, the driver/piston subassembly will not drift downward a small distance, and thus, the driver teeth 491 do not come into contact with the latch, even in view of the gas pressure above piston 458 (in the space 457).

[00170] At the "ready" position for the driver 490, the latch 420 may be positioned such that it would interfere with the driver teeth 491 (i.e., in an “interfering position”) as a safety feature (i.e., in which the latch surface 424 would “catch” the teeth 491 of the driver 490, if the driver somehow would move downward). However, the gearbox/lifter combination does not allow the "last tooth" 426 to contact that latch 420 at this point in the tool's operation.

[00171] This is the position illustrated in FIG. 21 of the second embodiment tool, and this configuration is considered to be the “rest” position of the tool 401. Although the gas pressure in the combined main storage chamber 454 and displacement volume 457 is at its maximum, the gearbox prevents the driver 490 from being moved further downward (in this view), so the piston/driver combination is essentially locked in this position until something else occurs. In a preferred mode of the invention, the pressure vessel may be pressurized at about 130 PSIG to 140 PSIG, just before a driving stroke.

[00172] It should be noted that, for the second embodiment tool 401, the gearbox can be of yet another alternative construction. For example, instead of being self-locking from its output side, a "regular" gearbox could be used if provided with a "one-way" feature, such as an adjacent one-way clutch (or a one-way clutch constructed therewithin). In this manner, the driver 490 would still be prevented from moving down (in FIG. 21) and contacting the latch surface 424, just before a driving stroke.

[00173] When it is time to drive a fastener, the next action in the illustrated second embodiment is to cause the motor 427 to become energized once again, so that the lifter 400

rotates further in its original direction. This occurs by two independent actions by the user: in some modes of the invention, these two independent actions can occur in either order. (There is also an optional "restrictive mode" of operation, in which the two independent actions must occur in a specific order.) These two actions are: pressing the nose 419 of the safety contact element 418 against a solid surface, and depressing the trigger actuator 439. The trigger actuator will cause the trigger switch 437 to change state, which is one condition that will start sending current to the motor 427. The safety contact element 418 has an upper arm 434 (see FIG. 25) that will be moved as the nose 419 is pushed into the tool 401, and this upper arm 434 will actuate another sensor which, in the illustrated embodiment, is a small limit switch 432 (see FIG. 25).

[00174] When both of these actions occur simultaneously, current is delivered to the motor 427 which will once again turn the rotary-to-linear lifter 400 a short distance. Also, the controller energizes the solenoid 431, which rotates the latch 420 a small angular distance clockwise (as seen in FIG. 20) to move the latch catching surface 424 from an interfering position, so that the latch will not prevent the driver 490 from moving downward when it is correctly time for a driving stroke. Therefore, the "last" tooth 426 of driver 490 (as seen in FIGS. 21 and 22) would not "catch" on this latch catching surface. Note that FIGS. 23 and 24 show details of the same structure depicted in FIG. 22 at different perspective angles.

[00175] Now that all this has occurred, the latch 420 is in its disengaged position so that its catching surface 424 will not interfere with any of the teeth 491 along the right-hand side (as seen in FIG. 20) of the driver 490; and none of the three "working" pins of the lifter 400 will interfere with those left-hand teeth 491. Once the driver tooth 491 "drops off" the last lifting pin 408, the driver 490 is quickly thrust downward in a driving stroke, due to the high gas pressure within the main storage chamber 454 and displacement volume 457. (This is the "gas spring" effect.) Along the way, the driver 490 will pick up a fastener that is waiting at the feeder carriage 448, and drive that fastener along the back plate 449 to the exit area at the bottom (at the area 417 on FIG. 16). After this action has occurred, the driver 490 will be situated at its lower-most position, as viewed in FIG. 20.

[00176] The pressure of the gas in the combined main storage chamber 454 and displacement volume 457 is sufficiently high to quickly force the driver 490 downward, and such pneumatic means is typically much faster than a nail driving gun that uses exclusively

mechanical means (such as a spring) for driving a fastener. This is due to the "gas spring" effect caused by the high gas pressure within the main storage chamber 454 and displacement volume 457 that, once the driver is released, can quickly and easily move the driver 490 in a downward stroke.

[00177] As the driver 490 is being moved downward, the piston 458 and the movable piston stop 459 are forcing air (or possibly some other gas) out of the cylinder venting chamber 492 that is below the piston. This volume of air is moved through a vent to atmosphere 450, and it is desired that this be a low resistance passageway, so as to not further impede the movement of the piston and driver during their downward stroke. The gas above the piston is not vented to atmosphere, but instead remains within the displacement volume 457, which is also in fluidic communication with the main storage chamber 454.

[00178] One aspect of the present invention is to provide a rather large storage space or volume to hold the pressurized gas that is also used to drive the piston downward during a driving stroke of the driver 490. There is a fluidic passage 452 between the upper portion of the cylinder and the main storage chamber 454. (In the illustrated second embodiment, the cylinder wall 451 does not extend all the way to the top end region 455.) It is preferred that the volume of the main storage chamber be larger than the total volume of the cylinder working spaces (i.e., the displacement volume) by a volumetric ratio of at least 2.0:1, and more preferably at least 3.0:1. This will allow for a powerful stroke, and a quick stroke; moreover, it provides for an efficient operating air spring.

[00179] The illustrated second embodiment of the present invention allows for both a quick firing (or driving) stroke time and also a fairly quick "lifting" time to bring the driver back to its upper position, ready for the next firing (driving) stroke. Both of these mechanical actions can sequentially occur in less than 340 milliseconds (combined time), and allow a user to quickly place fasteners into a surface. In one operating mode of the present invention, the human user can hold the trigger in the engaged position and quickly place a fastener at a desired location merely by pressing the nose (or "bottom") of the tool against the working surface to actuate the fastener driver and place the fastener. Then the user can quickly remove the fastener driver tool from that surface, and move it to a second position along the work surface, while still depressing the trigger the entire time, and then press the nose (or bottom) of the tool against the working surface at a different position, and it will drive a

fastener at that "different" position. This is referred to as a "bottom fire" capability, and when using the illustrated embodiment it can occur virtually as fast as a human can place the tool against a surface, then pick up the tool and accurately place it against the surface at a different position, and thereby repeat these steps as often as desired until emptying the magazine of fasteners. This type of mode of operation will be discussed in greater detail below in connection with the logic flow chart starting at FIG. 35, with respect to the control system of the fastener driving tool 401.

[00180] Referring now to FIG. 25, another side sectional view is provided that shows some of the elements beneath the latch and other portions of the second embodiment fastener driving tool 401. There are two limit switches 430 and 432. The limit switch 430 is a Hall-effect sensor that detects movements of the magnet 414 of the rotary-to-linear lifter 400 (as noted above). The limit switch 432 is a small electromechanical limit switch that detects movement of the upper arm 434, which is a portion of the safety contact element 418 that is pushed rearward (or "up" in these views) with respect to the overall tool 401 when the nose of the tool is pressed against a working surface. These limit switches provide electrical input signals to the controller, which is discussed below in greater detail. It will be understood that other types of sensors could be used instead of electromechanical limit switches or Hall-effect switches, such as optoelectronic sensors, or magnetic sensors, or even a metal-sensing proximity switch.

[00181] Also viewed on FIG. 25 is a return spring 436, which causes the safety contact element 418 to be pushed back downward (in this view) once the user releases the nose of the tool 401 from the working surface. In addition, there is a depth of drive adjustment at 438.

[00182] As generally indicated on FIG. 26 at a reference numeral 498, the driver 490 may be driven toward the exit end by a type of driver actuation device other than a gas spring. For example, the driver member 490 could have a top circular area 497 that is forced downward (in this view) by a mechanical spring 496, which could be a fast-acting coil spring, for example, thereby also causing driver 490 to move downward (in this view). Or an alternative driver actuation device could use a different type of mechanical force, for example, applied by compressed foam (in the area at 498). In such alternative embodiments, there would be no need for a cylinder at all, and instead the spring 496 (or other device at 498) would merely need a mechanical guide to keep it moving in a correct motion.

[00183] Further alternative ways to force the driver 490 of FIG. 26 to move in a driving stroke toward the exit end are the use of a fast-acting motor, or the use of a compressed gas valve (releasing compressed air into a cylinder against, for example, a piston 458 instead of the circular area 497), or perhaps a pressurized liquid valve (releasing pressurized hydraulic fluid into a cylinder against the piston 458, for example). If a piston 458 is used with compressed gas or pressurized liquid, then a cylinder (not shown) would also be added to the unit of FIG. 26, instead of merely using a mechanical guide.

[00184] Referring now to FIG. 27, further details of the solenoid are viewed. In FIG. 27, the solenoid 440 has a plunger 442 that will move linearly either in or out from the main coil body of the solenoid 440. When the solenoid is energized, it pulls the plunger 442 in toward the solenoid body 440, which rotates a solenoid arm 446 (part of the solenoid's "linkage"), which in turn rotates the latch shaft 422 that also rotates the latch 420 a small arcuate distance. This causes the latch 420 to disengage from an interfering position with the driver 490. On the other hand, when the solenoid 440 becomes de-energized, the plunger will be pushed out by the plunger spring 444, which will rotate the solenoid arm 446 a short distance, and that in turn rotates the latch shaft 422 and the latch 420. This will tend to cause the latch to engage the teeth 491 along the right-hand side (as seen in FIG. 20) of the driver 490. However, since this is a spring action, the teeth 491 can slide against the surface of the latch 420 and move the latch out of the way if the teeth are attempting to move upward along with the driver 490. However, the spring action of the solenoid plunger spring will be strong enough to push the latch 420 into its engaged position, and any teeth 491 attempting to move downward will be caught by the catching surface 424 of the latch 420.

[00185] This “catching” action of the latch 420 has more than one benefit. In the first place, the latch remains in its interfering position as the piston 458 is lifted to its top or “firing” position. The driver 490 cannot be fired until the latch 420 is moved out of the way, as discussed above. On the other hand, if there is some type of jam or an improper use of the tool by a user such that the driver 490 does not totally complete its travel during a firing (driving) stroke, the latch 420 will also prevent a misfire from occurring at an inconvenient time.

[00186] More specifically, if the driver jams during a driving stroke, and if a person tries to clear the jam, and if there was no precaution taken to prevent the remainder of the

stroke from occurring at that moment, then possibly an injury could occur when the driver 490 suddenly becomes released from its jammed condition. In other words, a fastener could be driven during the attempt to clear the jam, and that fastener would likely be directed somewhere that is not the original target surface. In the present invention, the latch 420 will have its solenoid 440 become de-energized once the jam occurs (because solenoid 440 will de-energize after a "timeout" interval occurs), and therefore the latch 420 will be engaged and the catching surface 424 will be in a position to interfere with the downward movement of the driver teeth 491. By use of this configuration, the driver could only move a short distance even if the jam was suddenly cleared, because the latch catching surface 424 will literally "catch" the "next" tooth 491 that unexpectedly comes along during a downward travel of the driver 490. This makes the tool much safer in situations where a complete driving stroke has not occurred.

[00187] The process for controlling the solenoid and the moments when the solenoid will either be energized or de-energized are discussed below in connection with the flow chart that begins on FIG. 35.

[00188] It will be understood that the latch 120 or 420 could be controlled by a device other than a solenoid, without departing from the principles of the present invention. For example, the solenoid 140 or 440 could be replaced by motor, or some type of air or hydraulic valve, if desired. Moreover, the latch action could be linear rather than rotational (pivotable), if desired.

[00189] With respect to various types of firing (or driving) modes, a "trigger fire" mode is where the user first presses the tool nose against a working surface, and then depresses the trigger actuator 439. It is the trigger being depressed that causes the driving stroke to occur in this situation. With respect to a "bottom fire" mode, the trigger is actuated first, and then the user presses the nose of the tool against a work surface, and it is the work surface contact that causes the driving stroke to occur. As discussed above, the user can continue to hold the trigger down while pressing against and releasing the tool from the work surface multiple times, and obtain quick multiple firing strokes (or driving strokes), thereby quickly dispensing multiple fasteners into the working surface at various locations.

[00190] There is also an optional "restrictive firing mode," in which the nose of the tool must be first placed against a working surface before the trigger is pulled. If the

sequence of events does not unfold in that manner, then the driving stroke will not occur at all. This is strictly an optional mode that is not used by all users, and certainly in not all situations.

[00191] With regard to alternative embodiments of the present invention second embodiment, an exemplary fastener driving tool can be made with a main storage chamber volume of about 11.25 cubic inches and a cylinder displacement volume of about 3.75 cubic inches. This would provide a volumetric ratio of the main storage chamber versus the displacement volume of about 3.0:1. As discussed above, it is desirable for the volumetric ratio of the main storage chamber's volume to the displacement volume to be at least 2.0:1, and it could be much higher if desired by the fastener driving tool's designer.

[00192] The working pressure in the system could be around 120 PSIG, and should probably be at least 100 PSIG for a quick-firing tool. By the term "working pressure" the inventors are referring to the pressure in the displacement volume 457 (and main storage chamber 454) at the time the piston 458 is at its "ready" position, which is when it is at (or proximal to) its uppermost travel position.

[00193] It should be noted that other gases besides air can be used for the main storage chamber and the displacement volume, if desired. While air will work fine in many or most applications, alternative gases could be used as the "charge gas," such as carbon dioxide or nitrogen gas. Moreover, the use of nitrogen gas can have other benefits during the manufacturing stage, such as for curing certain adhesives, for example.

[00194] In the illustrated second embodiment, there is no fill valve on the fastener driving tool 401 at the storage tank (main storage chamber) 454. This is a preferred mode of the present invention, although an optional fill valve could be provided, if desired by a tool designer. The design of the preferred mode of the present invention is such that the charge gas should not significantly leak from the tool, and therefore a fill valve would not be required.

[00195] Another feature of the present invention is that a variable stroke is possible by causing the rotary-to-linear lifter 400 to be rotated a multiple number of times to create a shorter or longer firing (driving) stroke, if desired. In the illustrated second embodiment, the lifter 400 makes a complete rotation two times to lift the piston from its lower-most position to its top-most position. This number of rotations of the lifter could be increased to three

times or four times if desired, or even could be decreased to a single turn for a shorter stroke tool, if desired.

[00196] Another possible variation is to use a composite sleeve for the internal cylinder wall 451, which would make contact with the seals of the piston 458. In addition, the outer pressure vessel wall 456 could also be made of a composite material, if desired. The use of a carbon fiber composite, for example, would decrease weight, but would maintain the desired strength.

[00197] Referring now to FIG. 28, some of the details of the piston arrangement are illustrated in cross-section for the second embodiment 401 of the present invention. This piston is designated by the reference number 458. There are upper and lower seals at 482 and 484, respectively. Between these seals is an annular space 486 that is at least partially filled with lubricating fluid, such as oil. This oil will tend to lubricate the movements of the piston 458 along the inner surface of the cylinder wall 451. Part of the piston mechanism of this embodiment includes a piston scraper 489.

[00198] The seals 482 and 484 are designed to hold the oil 488 within the annular space 186 indefinitely, or at least to lose the oil only at a very slow rate. In a preferred mode of the invention, the seals have a "slick" coating material to provide a long operational life. In the illustrated embodiment, an exemplary material for this coating is XYLAN™, which is a TEFLON™ material that includes molybdenum powder.

[00199] The driver element 90 of tool 10 and the driver element 490 of tool 401 both retract into their respective working cylinder areas 71 and 453. This is a unique arrangement, in that some of the driver's latching protrusions (or "teeth") 92 and 491 also retract into the working cylinder areas 71 and 453. This is made possible by the positioning of the respective lifters 100 and 400, and by the shapes of the driver elements 90 and 490, and also by the sealing arrangement of the pistons 80 and 458, discussed in the previous paragraphs.

[00200] It will be understood that the fastener magazine portion 16 of tool 10 and the fastener magazine portion 407 of the tool 401 are essentially optional features. In other words, the fastener driving tools 10 and 401 could be constructed to act as "single-shot" devices, and no magazine would be provided for such a tool. Alternatively, the tools 10 and 401 could be provided with a standard detachable magazine, but the tools themselves could also be constructed to work in a "single-shot mode" such that a single fastener is placed in the

tool 10 or 401, near its front end or tip (e.g., near 30) and that single fastener is then driven by tool 10 or 401. In this mode, the magazine 16 or 407 could be dismounted from the tool 10 or 401 during the single-shot procedure; later, the magazine 16 or 407 could be re-mounted to the tool 10 or 401, and the collated fasteners in the magazine could then be driven by the tool, as desired by the user.

[00201] Referring now to FIG. 30, an alternative embodiment rotary-to-linear lifter is illustrated, generally designated by the reference numeral 460. Lifter 460 has only a single protrusion (or "pin") at 462, and the lifter 460 rotates about a pivot axis at 461. The outer perimeter shape of lifter 461 is mainly arcuate at 464, and only comprises a small sector of a full circle. Yet lifter 460 can achieve the goals of the present invention, in that its protrusion 462 will provide a discontinuous contact surface with the "teeth" of a driver element, such as the driver 90 or driver 490. Lifter 460, having only a single "pin" would need to rotate more quickly that the other lifters 100 and 400, described above and in the drawings showing the first and second embodiments of a tool 10 or 401 (assuming that it was attempting to lift a driver having the same size and shape, and "teeth" spacings, as those previously described drivers).

[00202] Referring now to FIG. 31, another alternative embodiment rotary-to-linear lifter is illustrated, generally designated by the reference numeral 465. Lifter 465 has two protrusions (or "pins") at 467 and 468, and the lifter 465 rotates about a pivot axis at 466. The outer perimeter shape of lifter 465 has a very irregular geometric shape at 469. Yet lifter 465 can achieve the goals of the present invention, in that its protrusions 467 and 468 will provide a discontinuous contact surface with the "teeth" of a driver element, such as the driver 90 or driver 490. Lifter 465, having only two "pins" would need to rotate more quickly that the other lifters 100 and 400, described above and in the drawings showing the first and second embodiments of a tool 10 or 401 (assuming that it was attempting to lift a driver having the same size and shape, and "teeth" spacings, as those previously described drivers).

[00203] Referring now to FIG. 32, yet another alternative embodiment rotary-to-linear lifter is illustrated, generally designated by the reference numeral 470. Lifter 470 has three protrusions (or "pins") at 472, 473, and 474, and the lifter 470 rotates about a pivot axis at 471. The outer perimeter shape of lifter 471 has a very regular geometric shape at 475, which is that of a circle. Yet lifter 470 can achieve the goals of the present invention, in that its

protrusions 472, 473, and 474 will provide a discontinuous contact surface with the "teeth" of a driver element, such as the driver 90 or driver 490. Lifter 470, having three "pins" would need to rotate generally at the same speed as the other lifters 100 and 400, described above and in the drawings showing the first and second embodiments of a tool 10 or 401 (assuming that it was attempting to lift a driver having the same size and shape, and "teeth" spacings, as those previously described drivers).

[00204] Referring now to FIG. 33, still another alternative embodiment rotary-to-linear lifter is illustrated, generally designated by the reference numeral 480. Lifter 480 has two protrusions (or "pins") at 482 and 483, and the lifter 480 rotates about a pivot axis at 481. The outer perimeter shape of lifter 481 has a very regular geometric shape at 484, which is that of a square. Yet lifter 480 can achieve the goals of the present invention, in that its protrusions 482 and 483 will provide a discontinuous contact surface with the "teeth" of a driver element, such as the driver 90 or driver 490. Lifter 480, having only two "pins" would need to rotate more quickly that the other lifters 100 and 400, described above and in the drawings showing the first and second embodiments of a tool 10 or 401 (assuming that it was attempting to lift a driver having the same size and shape, and "teeth" spacings, as those previously described drivers).

[00205] Referring now to FIG. 35, a logic flow chart is provided to show some of the important steps used by a system controller for the fastener driving tool 401 of the second illustrated embodiment for the present invention. Starting at an initializing step 500, a step 502 loads registers with predetermined values, and a step 504 loads special function registers with predetermined values. A step 506 now “checks” the RAM (Random Access Memory) to be sure it is functioning properly, and then a step 508 clears the RAM. A step 510 now loads unused RAM with predetermined values, based on the software coding for the system controller (typically in firmware or hard-coded).

[00206] A step 512 now determines the stability of the system electrical power supply. Then a step 514 causes an electrical output to blink one or more LEDs (light-emitting diodes) 443 on tool 510, so the user is made aware that the tool 510 has entered its "startup" mode of operation. Step 514 also initializes the interrupts that will be used for the controller, and the controller is now ready to enter into an operational routine.

[00207] A decision step 516 now determines if the safety has been actuated (i.e., whether the safety contact element 418 has been pressed against a solid object to an extent that actuates the sensor, e.g., limit switch 432). Step 516 also determines if the trigger 439 has been pulled. If the answer is YES for either of these questions, then the logic flow is directed to a step 520. If the answer is NO for both of these questions, then the logic flow is directed to another decision step 518.

[00208] Step 518 determines whether or not the LEDs 443 have flashed a predetermined maximum number of times. If the answer is YES, then the logic flow is directed to step 520. If the answer is NO, then the logic flow loops back to step 514.

[00209] At a step 520, the control logic enters a “BEGIN” routine. A decision step 540 now determines whether or not the current operating mode is the "RESTRICTIVE" mode. This determination involves inspecting the current state of the selector switch 441 which, as noted above, has three positions: "Off", "Mode A", or "Mode B". This three-position switch 441 is part of an exemplary arrangement of the second embodiment of the fastener driving tool 401, and in this description of the second tool embodiment, Mode A and Mode B are also referred to as a "Restrictive Mode," and a "Contact Actuation Mode."

[00210] If the current operating mode is not the RESTRICTIVE mode, then the logic flow is directed to a decision step 522. On the other hand, if the current mode is the RESTRICTIVE mode, then the logic flow is directed to a step 542 in which the tool enters a “restrictive fire” routine. The logic flow is directed now to a decision step 544 that determines if the trigger has been pulled. If the answer is NO, then the logic flow is directed to a decision step 541. On the other hand, if the trigger has been pulled, then the logic flow is directed to a step 546 that will further direct the logic flow to the “STOP 1” function (or routine) at a step 680 on FIG. 37. It should be noted that, in the “restrictive fire” mode of operation, the trigger cannot be pulled first; instead the nose of the fastener driving tool must be pushed against the solid surface before the trigger is pulled. In other words, this particular "firing mode" is a predetermined sequential mode of operation (and the term "restrictive fire mode" is also referred to herein as the "sequential mode").

[00211] If the logic flow at decision step 544 resulted in a NO result, the logic flow at decision step 541 determines whether or not the safety has been actuated. If the answer is NO, then the logic flow is directed back to the "restrictive fire" routine, just before step 544.

However, if the answer is YES, the logic flow is directed to a step 543, in which the controller turns on the "work light," which is a small electric lamp (e.g., an LED) that illuminates the workpiece where the fastener is to be driven.

[00212] A decision step 545 now determines whether or not a "sequential mode timeout" has occurred, and if the answer is YES, the logic flow is directed to a step 547 that directs the logic flow to the "STOP 1" function at step 680 on FIG. 37. This temporarily stops the tool from operating. On the other hand, if the timeout has not yet occurred, the logic flow is directed to a decision step 548 that determines whether the trigger has been pulled. If the answer is NO, the logic flow is directed back to the decision step 544. On the other hand, if the answer is YES, the logic flow is directed to a step 549 that causes the tool to enter the "DRIVE" mode of operation at step 560 on FIG. 36.

[00213] If the answer at step 540 was NO, the decision step 522 now determines whether or not the trigger has been pulled. If the answer is YES, the logic flow is directed to a step 530 in which the logic flow enters a "TRIGGER" routine. A step 531 turns on a "work light," which is the same lamp/LED that was discussed above in reference to step 543.

[00214] A decision step 532 now determines whether or not a predetermined "trigger timeout" has occurred, and if the answer is YES, a step 534 directs the logic flow to a "STOP 1" routine, that is illustrated on FIG. 37 at a step 680. What this actually means is that a user pulled the trigger, but then did not actually use the tool against a solid surface, and rather than having the tool ready and primed to fire a fastener at any moment for an indefinite period of time, a predetermined amount of time will pass (i.e., the "timeout" interval), and once that has occurred, the system will be basically deactivated in the STOP 1 mode. This is not a permanent stoppage of the functioning of the tool, but is only temporary. Note that the "timeouts" are interrupt driven, in an exemplary embodiment of the present invention.

[00215] If the timeout has not occurred at decision step 532, then a decision step 536 determines if the safety has been actuated. If the answer is NO, then the logic flow is directed back to the BEGIN routine 520. On the other hand, if the safety has been actuated at step 536, then the logic flow is directed to a step 538 that will send the logic flow to a "DRIVE" routine, which is on FIG. 36 at a step 560. This will be discussed below in greater detail.

[00216] If, at step 522, the trigger was not yet pulled, then the logic flow is directed to the decision step 524. When the logic flow reaches decision step 524, the logic now determines whether or not the safety has been actuated. This step determines whether or not the safety contact element 418 has been pressed against a solid object to an extent that actuates the sensor (e.g., limit switch 432), which means that the tool is now pressed against a surface where the user intends to place a fastener. If the answer is NO, the logic flow is directed back to the mode switch query at decision step 540. However, if the answer is YES, the logic flow is directed to a step 550 in which the controller enters a "SAFETY" routine.

[00217] Once at the SAFETY routine at step 550, a step 551 turns on the "work light," which is the same lamp/LED that was discussed above in reference to step 531. A decision step 552 now determines whether or not a "safety timeout" has occurred, and if the answer is YES, the logic flow is directed to a step 554 that directs the logic flow to the "STOP 1" function at step 680 on FIG. 37. This temporarily stops the tool from operating. On the other hand, if the timeout has not yet occurred, the logic flow is directed to a decision step 556 that determines whether the trigger has been pulled. If the answer is NO, the logic flow is directed back to the decision step 524. On the other hand, if the answer is YES, the logic flow is directed to a step 558 that causes the tool to enter the "DRIVE" mode of operation at step 560 on FIG. 36.

[00218] As can be seen by reviewing the flow chart of FIG. 35, unless the tool 401 is in the restrictive fire mode (at step 542), the tool can be actuated with either one of the two important triggering steps occurring first: i.e., the trigger could be pulled before the safety is actuated, or vice versa.

[00219] Referring now to FIG. 36, the logic flow from FIG. 35 is directed to the "DRIVE" routine 560 from two other steps on FIG. 35: these are step 538 and step 558. Once at the DRIVE routine 560, a switch debounce step 562 is executed to determine whether or not one or both of the triggering elements was somehow only actuated intermittently. If so, the system designers have determined that the tool should not operate until it is more certain that the input switches have actually been actuated. To do this, the logic flow is directed to a decision step 564 to determine if the safety is still actuated. If the answer is NO, then the logic flow is directed to a step 566 that sends the logic flow back to the SAFETY routine at step 550. On the other hand, if the safety still is actuated at step 564,

then the logic flow is directed to a decision step 570 to determine if the trigger is still being pulled. If the answer is NO, then the logic flow is directed to a step 572 that sends the logic flow back to the TRIGGER routine at step 530.

[00220] On the other hand, if decision steps 564 and 570 are both answered affirmatively, then a step 580 clears the operational timers, and the logic flow is then directed to a decision step 582 that determines if the software code flow is within certain parameters. This is a fault-checking mode of the software itself, and if the system does not determine a satisfactory result, then the logic flow is directed to a step 584 that sends the logic flow to a "STOP" routine at a step 670 on FIG. 37. This will ultimately turn the tool off and require a safety inspection of the tool, or at least have the tool reset. However, the tool does not need to be completely disabled, and after the safety inspection and tool reset procedure, the tool will be ready to use again without being sent to a service center. In an exemplary mode of the invention, the code flow check step determines if a correct number resides in a register or memory location; this number is the result of being incremented at predetermined executable steps of the software for the system controller.

[00221] If the software code flow check is within acceptable parameters at decision step 582, then the logic flow is directed to a step 590 that turns on the motor, and then a step 592 that turns on the solenoid. A step 594 now starts the solenoid timer and a step 596 now starts the motor run timer. As will be discussed below, these timers will be periodically checked by the system controller to make sure that certain things have occurred while the solenoid is on and while the motor is running. Otherwise, after a predetermined maximum amount of time, the motor will be turned off and the solenoid will be turned off due to these timers actually timing out, which should not occur if the tool is being used in a normal operation, and if the tool is functioning normally.

[00222] In addition to the solenoid and motor run timers discussed above, a "dwell timer" is used to allow the tool to begin its normal operation before any further conditions are checked. This is accomplished by a decision step 598 on FIG. 36, which causes the logic flow to essentially wait a short amount of time before continuing to the next logic steps.

[00223] Once the dwell timer has finished at step 598, the logic flow is directed to a decision step 600 that determines if the solenoid "on time" has been exceeded. If the answer is YES, the logic flow is directed to a step 602 that turns off the solenoid. This situation does

not necessarily mean the tool is being misused or is not functioning properly, and therefore the logic flow does not travel to a "stop step" from the step 602. Instead, the logic flow is directed to a decision step 604, discussed below.

[00224] If the solenoid on time has not been exceeded, then the logic flow also is directed to the decision step 604, which determines if the cam limit switch has received a first signal. This is the Hall effect sensor 430 that detects the presence or absence of the magnet 414 of the lifter. If the tool of the illustrated embodiment is being used, the lifter 410 will make two complete rotations when lifting the driver and piston from their bottom-most positions to their top-most positions. Therefore, the cam limit switch 430 will receive two different signals during this lift. Step 604 determines if the first signal has occurred. If not, then a decision step 610 determines whether the motor timeout has occurred. If the answer is NO, then the logic flow is directed back to decision step 600. On the other hand, if the motor run timer has indeed timed out, then the logic flow is directed to a step 612 that sends the logic flow to a "STOP" routine at step 670. This would likely indicate that there is a problem with the tool, or a problem with the way the user is attempting to operate the tool.

[00225] Referring back to decision step 604, if the first signal from the cam has occurred, then the logic flow is directed to a step 606 that turns off the solenoid. This will allow the latch 420 to engage the teeth 491 of the driver 490, in case there has been some type of jam, or other type of unusual operation while the driver and piston are being lifted. It also allows the latch 420 eventually to properly engage the bottom-most tooth 426 of the driver, which is the normal operation once the driver and piston have been raised to their top-most (or firing) position.

[00226] The logic flow is now directed to a decision step 620 that determines whether a second signal has been received from the cam limit switch. If the answer is NO, then the logic flow is directed to a decision step 622 that determines whether or not the motor run timer has timed out. If the answer is NO, then the logic flow is directed back to decision step 620. On the other hand, if the motor timer has timed out, the logic flow is directed to a step 624 that directs the logic flow to the "STOP" routine at 670, and indicates that there is some type of problem.

[00227] Once decision step 620 determines that the second signal from the cam has been received, then the logic flow is directed to a step 630 that turns off the motor, then to a

step 632 that starts a "reset" timeout referred to as "all switches on." In this mode, it is either assumed that both the actuation (input) devices are still actuated, or at least that the controller needs to make an examination of those input devices to see what the proper status of the tool should be. Accordingly, the logic flow is first directed to a decision step 634, which determines whether the operator mode selector switch 441 is set to the Restrictive Mode, and if not, the logic flow is directed to a decision step 640 (discussed below).

[00228] If the answer is YES at step 634, the logic flow is directed to a decision step 635 that determines whether or not the reset timeout has occurred. If the answer is YES, then the logic flow is directed to a step 636, and the tool then enters the STOP1 routine at step 680 on FIG. 37. If the answer was NO at step 635, a decision step 637 determines whether or not the safety is still actuated (or "pulled"). If the answer is YES, then the logic flow is directed back to step 635; if the answer is NO, the logic flow is directed to a decision step 638 which determines whether or not the trigger is still being pulled. If the answer is YES, then the logic flow is directed back to step 635; if the answer is NO, the logic flow is directed to a step 639, and the tool then enters the BEGIN routine at step 520 on FIG. 35.

[00229] Back at step 634, if the current selector switch mode was not Restrictive, then the logic flow is directed to a decision step 640 that determines if the safety is still actuated. If the answer is NO, then the logic flow is directed to a step 642 that then sends the logic flow to the "BEGIN" routine at step 520 on FIG. 35. On the other hand if the safety is still actuated, the logic flow is directed to a decision step 650 that determines if the trigger is still pulled. If the answer is NO, then the logic flow is directed to a step 652 that also directs the logic flow to the "BEGIN" step at 520 on FIG. 35. Finally, if the trigger is still being pulled, then a decision step 660 determines whether or not a "reset" timeout has occurred, and if the answer is YES, the logic flow is directed to a step 662 that sends the logic flow to the "STOP 1" routine at step 680 on FIG. 37. If the reset timeout has not yet occurred at step 660, then the logic flow is directed back to the decision step 640 and the inspection of all of the switches will again be performed.

[00230] The logic flow is continued on FIG. 37, in which there are two different types of stop routines. The routine called "STOP" at step 670 will first turn off the motor at a step 672, turn off the solenoid at a step 674, and turn off the work light at a step 676. The STOP routine will then clear the timers at a step 678. The logic flow then becomes a "DO-Loop,"

and continues back to the STOP routine at step 670. This is a fault mode, and the tool must be inspected. As a minimum, it needs to be reset to terminate the DO-Loop processing of the software, which means that the battery must be disconnected from the tool. If the user has been using the tool properly, this may be an indication that there is some operational problem with the tool itself, or that a fastener perhaps has jammed somewhere in the tool and the operator did not notice that fact.

[00231] The other type of STOP routine is the "STOP 1" routine at step 680. Once that occurs, a step 682 turns off the motor, turn off the solenoid at a step 684, and turn off the work light at a step 686. The STOP 1 routine will then clear the timers at a step 688, and a decision step 690 determines whether or not the trigger is still pulled. If the answer is YES, then the logic flow is directed back to the STOP 1 routine at step 680. If the trigger is not pulled at step 690, the logic flow is then directed to a decision step 692 that determines if the safety is still actuated. If YES, the logic flow is directed back to the STOP 1 routine at step 680. However, if the safety is not actuated, the logic flow is directed to a step 698 that sends the logic flow to the "BEGIN" routine at step 520 on FIG. 35. At this point, the tool has been successfully used, and is ready for the next firing (driving) actuation.

[00232] In the above detailed description, there are a number of various timeouts that may occur during the operation of the tools built according to the present invention. As of the writing of this patent application, all of the timeout intervals are set for three (3) seconds. However, each of the timeouts is designed so as to be independently settable by the system designer, in case it becomes desirable to alter one or more of the individual timeout intervals (i.e., to a time value other than three seconds). Normally this would be done in software code (stored in the memory circuit), used to instruct the processing circuit in its operations, although hardware timers could instead be used.

[00233] It will also be understood that the logical operations described in relation to the flow charts of FIGS. 13-15 and FIGS. 35-37 can be implemented using sequential logic, such as by using microprocessor technology, or using a logic state machine, or perhaps by discrete logic; it even could be implemented using parallel processors. One preferred embodiment may use a microprocessor or microcontroller to execute software instructions that are stored in memory cells within an ASIC. In fact, the entire microprocessor or microcontroller, along with RAM and executable ROM, may be contained within a single

ASIC, in one mode of the present invention. Of course, other types of circuitry could be used to implement these logical operations depicted in the drawings without departing from the principles of the present invention.

[00234] It will be further understood that the precise logical operations depicted in the flow charts of FIGS. 13-15 and FIGS. 35-37, and discussed above, could be somewhat modified to perform similar, although not exact, functions without departing from the principles of the present invention. The exact nature of some of the decision steps and other commands in these flow charts are directed toward specific future models of fastener driver tools (those involving Senco Products tools, for example) and certainly similar, but somewhat different, steps would be taken for use with other models or brands of fastener driving tools in many instances, with the overall inventive results being the same.

[00235] Other aspects of the present invention may have been present in earlier fastener driving tools sold by the Assignee, Senco Products, Inc. (or Senco Brands, Inc.), including information disclosed in previous U.S. patents and published applications. Examples of such publications are patent numbers US 6,431,425; US 5,927,585; US 5,918,788; US 5,732,870; US 4,986,164; and US 4,679,719.

[00236] All documents cited in the Background of the Invention and in the Detailed Description of the Invention are, in relevant part, incorporated herein by reference; the citation of any document is not to be construed as an admission that it is prior art with respect to the present invention.

[00237] The foregoing description of a preferred embodiment of the invention has been presented for purposes of illustration and description. It is not intended to be exhaustive or to limit the invention to the precise form disclosed. Any examples described or illustrated herein are intended as non-limiting examples, and many modifications or variations of the examples, or of the preferred embodiment(s), are possible in light of the above teachings, without departing from the spirit and scope of the present invention. The embodiment(s) was chosen and described in order to illustrate the principles of the invention and its practical application to thereby enable one of ordinary skill in the art to utilize the invention in various embodiments and with various modifications as are suited to particular uses contemplated. It is intended to cover in the appended claims all such changes and modifications that are within the scope of this invention.

[00238] While this invention has been described with respect to embodiments of the invention, the present invention may be further modified within the spirit and scope of this disclosure. This application is therefore intended to cover any variations, uses, or adaptations of the invention using its general principles. Further, this application is intended to cover such departures from the present disclosure as come within known or customary practice in the art to which this invention pertains and which fall within the limits of the appended claims.

CLAIMS

What is claimed is:

1. A portable fastener driving tool, comprising:

a housing with a storage chamber that contains a pressurized gas, a hollow cylinder that includes a movable piston, a movable driver that is in communication with said piston at least during a drive stroke, a lifter that is in communication with said driver at least during a return stroke, a prime mover, and a source of energy;

said storage chamber being in fluidic communication with said hollow cylinder; and

said storage chamber including a removable top cap at a location proximal to an end of said hollow cylinder.

2. The tool of claim 1, further comprising:

said movable driver including at least one protrusion; and

said lifter including at least one extension;

wherein:

said at least one extension of the lifter mechanically engages with said at least one protrusion of the driver during said return stroke.

3. The tool of claim 2, further comprising:

a guide body with a linear passageway for said driver;

wherein: said lifter moves in a rotational motion and causes said driver to move in a linear motion along said linear passageway.

4. The tool of claim 2, wherein:

said cylinder and piston act as a gas spring during said drive stroke, and said lifter does not mechanically engage said driver during said drive stroke.

5. A portable fastener driving tool, comprising:

a housing with a main storage chamber that contains a pressurized gas;

a hollow cylinder that includes a movable piston, wherein:

(a) during an operating cycle, a displacement volume of the hollow cylinder is always in fluidic communication with said main storage chamber, and

(b) said pressurized gas is not exhausted to atmosphere after a driving stroke, but instead is re-used for a plurality of said operating cycles;

a driver that is in communication with said piston at least during a drive stroke;

a lifter that is in communication with said driver at least during a return stroke;

a guide body with a linear passageway for said driver;

a handle portion;

a motor that provides motive power for said lifter;

a removable battery pack that provides energy for said motor; and

a removable magazine that holds a plurality of fasteners;

wherein:

said removable battery pack is attached proximal to said handle portion; and

said removable magazine is attached proximal to an exit end of said guide body, wherein said magazine extends past said removable battery pack.

6. The tool of claim 5, further comprising:

said movable driver including at least one protrusion; and

said lifter including at least one extension;

wherein, during said return stroke:

(a) said at least one extension of the lifter mechanically engages with said at least one protrusion of the driver, and

(b) said lifter moves in a rotational motion and causes said driver to move in a linear motion along said linear passageway.

7. The tool of claim 6, wherein:

said cylinder and piston act as a gas spring during said drive stroke, and said lifter does not engage said driver during said drive stroke.

8. The tool of claim 5, wherein:

a bottommost surface of said magazine is farther from a centerline of said exit end of the guide body than is a bottommost surface of said battery pack.

9. A portable fastener driving tool, comprising:

(a) a housing with a storage chamber that contains a pressurized gas;

(b) a hollow cylinder that includes a movable piston, wherein said storage chamber is in fluidic communication with said hollow cylinder;

(c) a movable driver that is in communication with said piston at least during a drive stroke;

(d) a lifter that is in communication with said driver at least during a return stroke;

(e) a guide body that is located proximal to said hollow cylinder, and having a linear passageway for said driver, and having an exit end that is located distal from said hollow cylinder;

(f) a removable battery pack that is located at a rear portion of said tool; and

(g) a safety contact element proximal to said exit end, said safety contact element being disposed at a front portion of the tool, above said guide body.

10. The tool of claim 9, further comprising:

an electric motor that derives energy from said battery pack, which provides motive power for said lifter.

11. The tool of claim 10, wherein:

said safety contact element prevents said drive stroke from occurring unless said safety contact element is pressed against a solid surface.

12. The tool of claim 10, further comprising:

(a) said movable driver including at least one protrusion; and

(b) said lifter including at least one extension;

(c) wherein, during said return stroke:

(i) said at least one extension of the lifter mechanically engages with said at least one protrusion of the driver, and

(ii) said lifter moves in a rotational motion and causes said driver to move in a linear motion along said linear passageway.

13. The tool of claim 10, wherein:

said cylinder and piston act as a gas spring during said drive stroke, and said lifter does not engage said driver during said drive stroke.

14. The tool of claim 9, wherein:

said safety contact element is located directly above said guide body, and extends from said front portion of the tool toward a rear portion of the tool, extending along at least a surface of the guide body that is on the opposite side of the tool from where said battery pack is located.

FASTENER DRIVING TOOL USING A GAS SPRING

ABSTRACT OF THE DISCLOSURE

A portable linear fastener driving tool is provided that drive staples, nails, or other linearly driven fasteners. The tool uses a gas spring principle, in which a cylinder filled with compressed gas is used to quickly force a piston through a driving stroke movement, while a driver also drives a fastener into a workpiece. The piston/driver is then moved back to its starting position by use of a rotary-to-linear lifter, and the piston again compresses the gas above the piston, thereby preparing the tool for another driving stroke. The driver has protrusions along its edges that contact the lifter, which lifts the driver during a return stroke. A pivotable latch is controlled to move into either an interfering position or a non-interfering position with respect to the driver protrusions, and acts as a safety device, by preventing the driver from making a full driving stroke at an improper time.

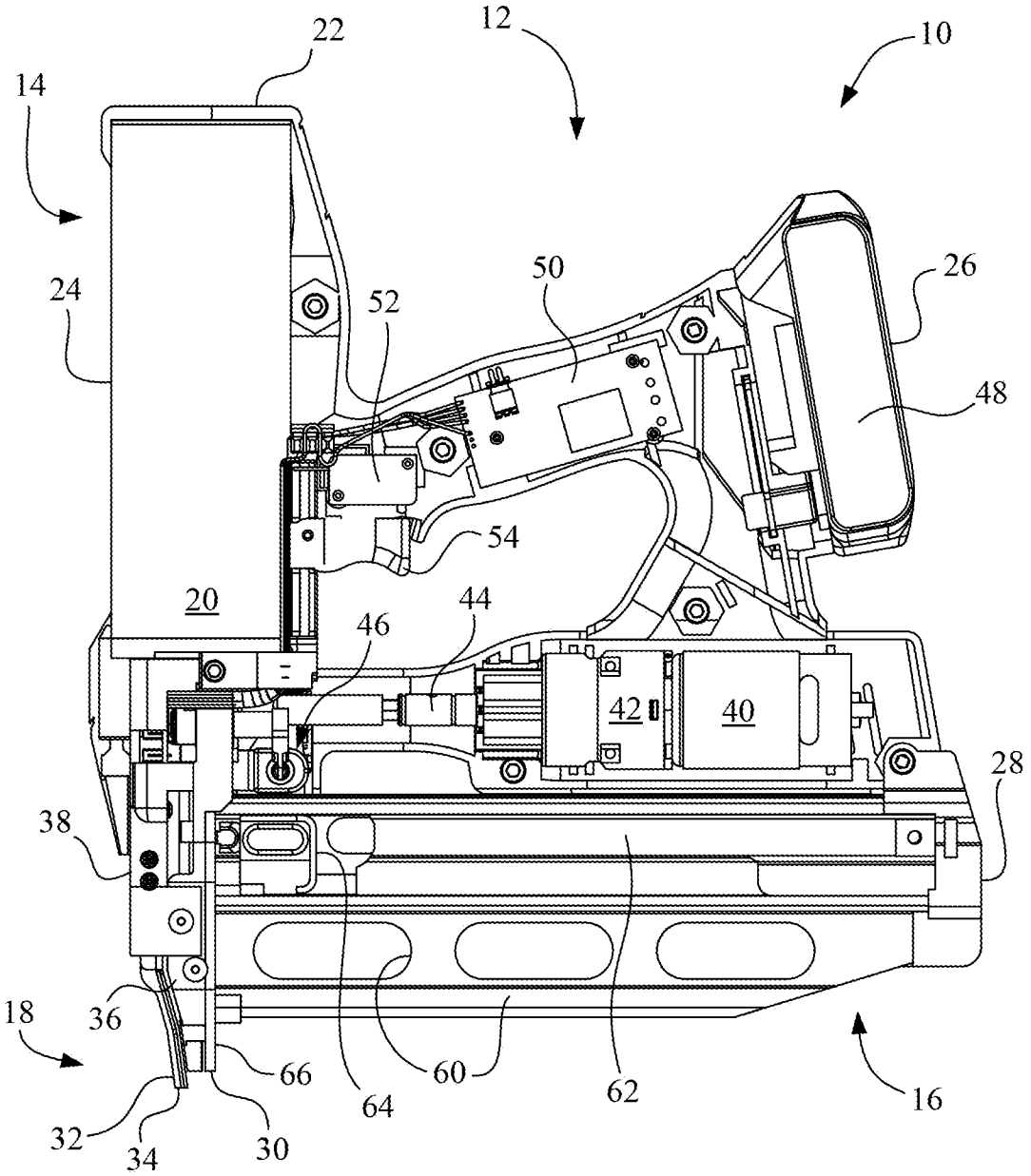
10
12
14
16
18
20
22
24
26
28
30
32
34
36
38
40
42
44
46
48
50
52
54
60
62
64
66

Fig. 1

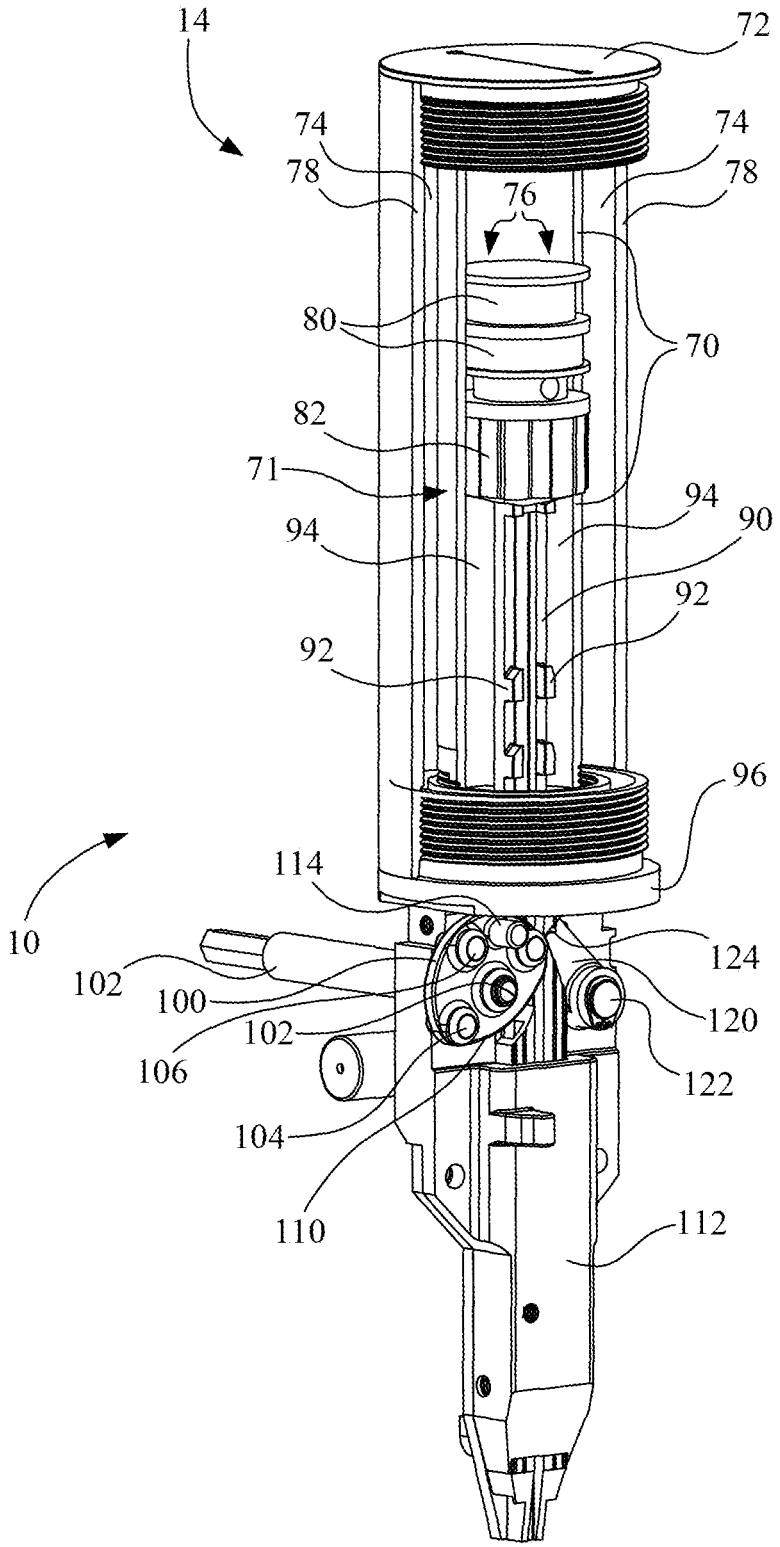
14
72
74
74
78
78
76
80
70
82
71
94
90
94
92
92
96
114
10
124
102
100
120
102
106
122
104
110
112

Fig. 2

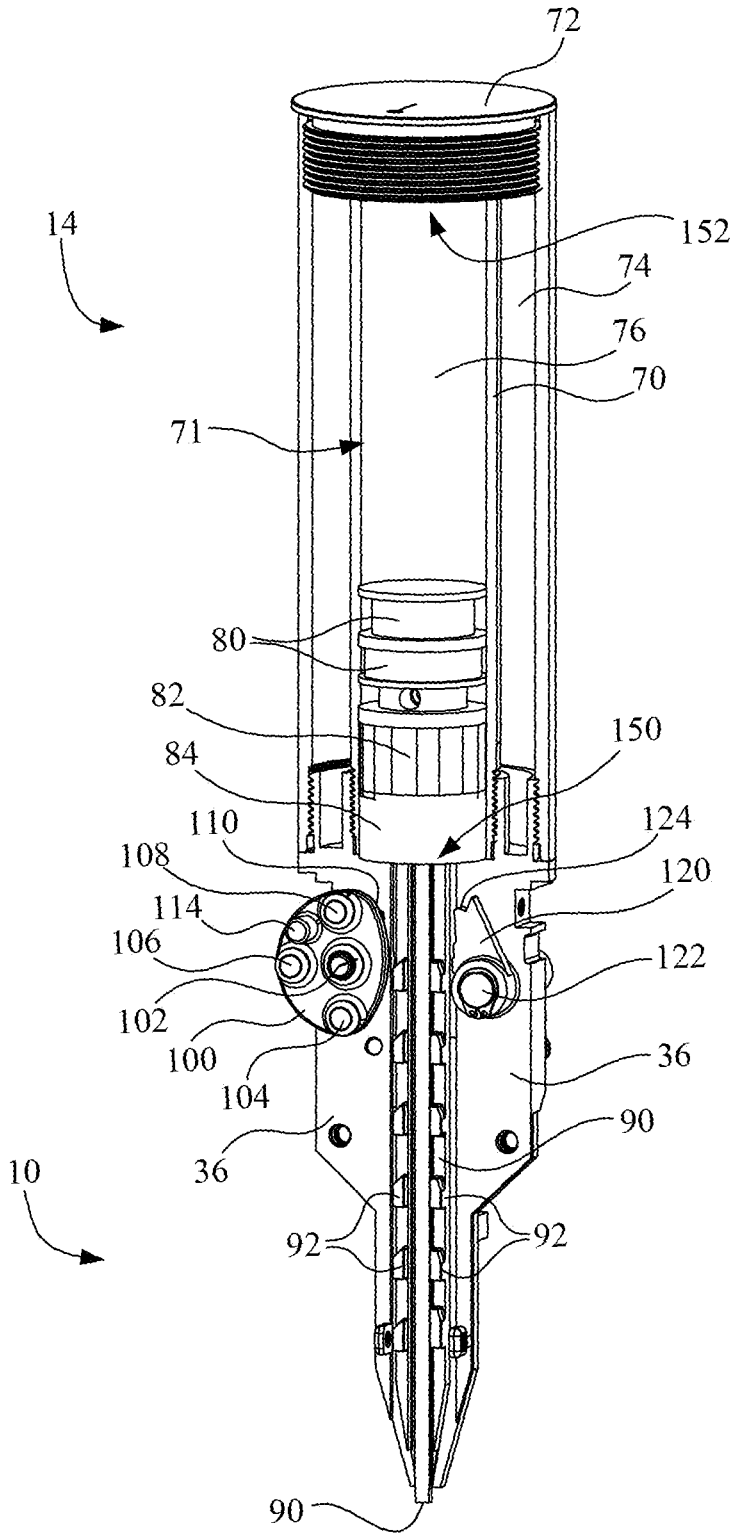
72
14
152
74
76
70
71
80
82
150
84
110
124
108
120
114
106
122
102
100
36
104
90
10
36
92
92
90

Fig. 3

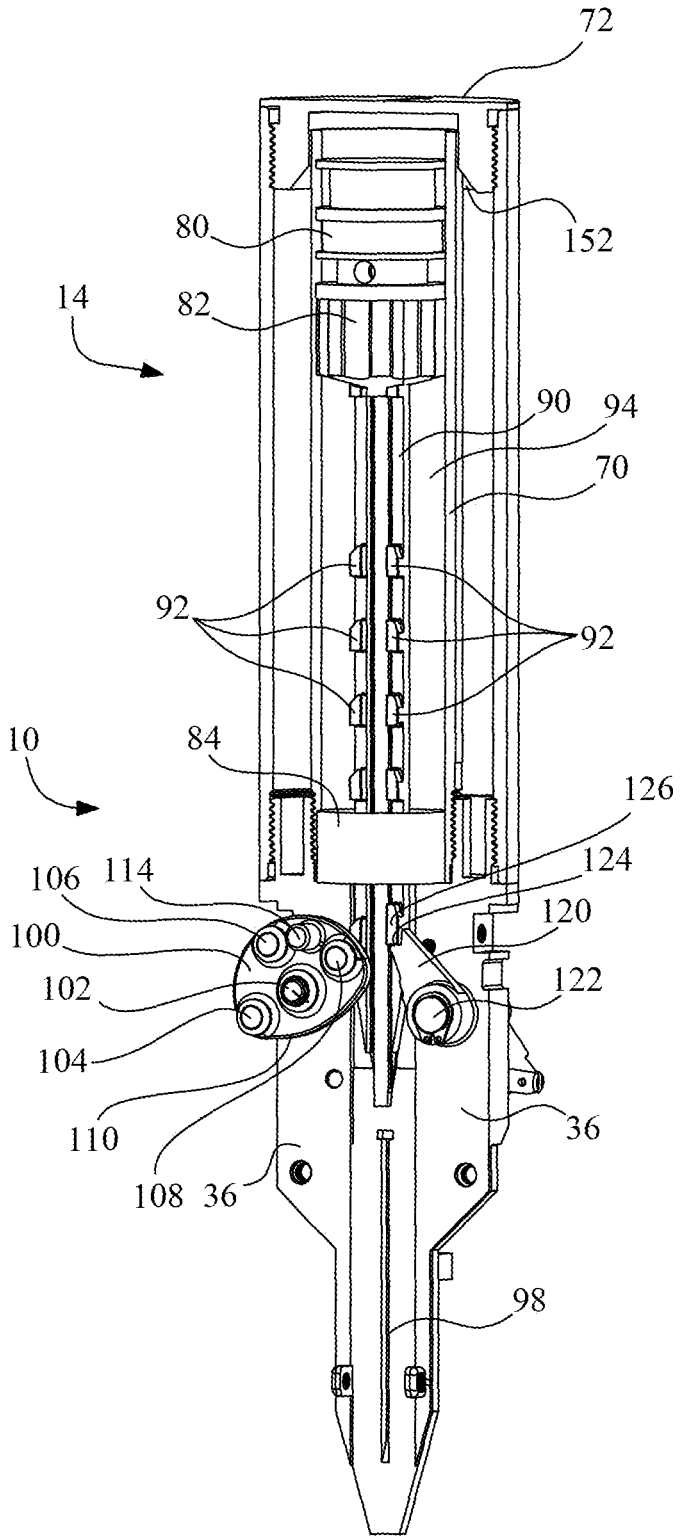
72
152
80
14
82
90
94
70
92
92
10
84
126
124
106
114
120
100
122
102
104
110
36
108
36
98

Fig. 4

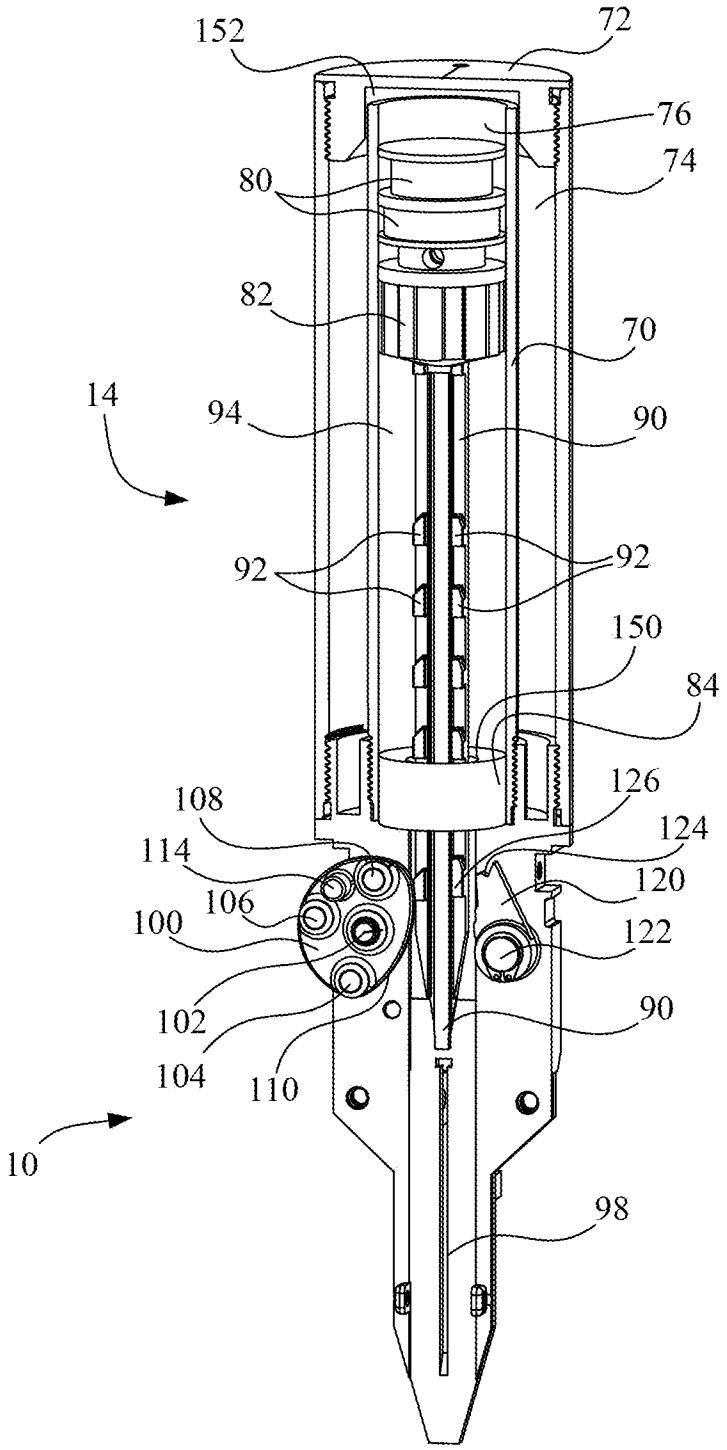
152
72
76
74
80
82
70
14
94
90
92
92
150
84
108
126
124
114
120
106
100
122
102
90
104
110
10
98

Fig. 5

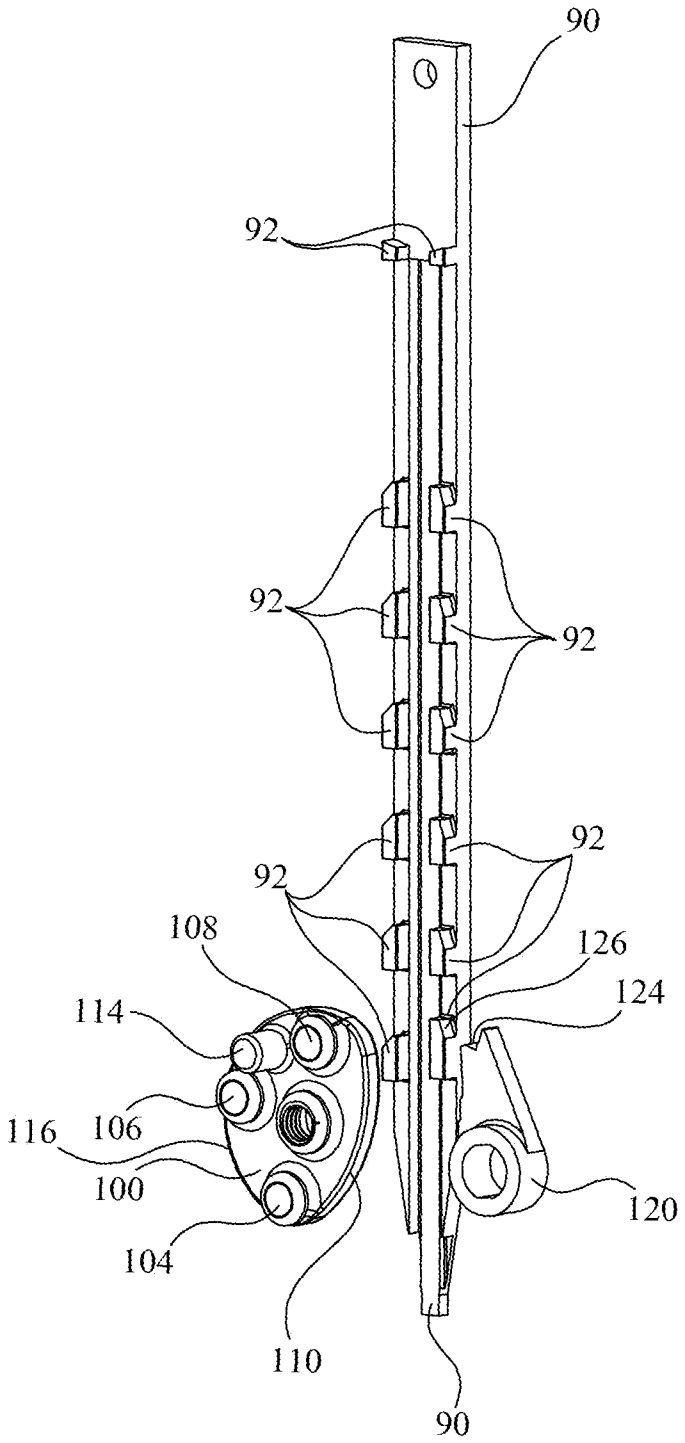

Fig. 6

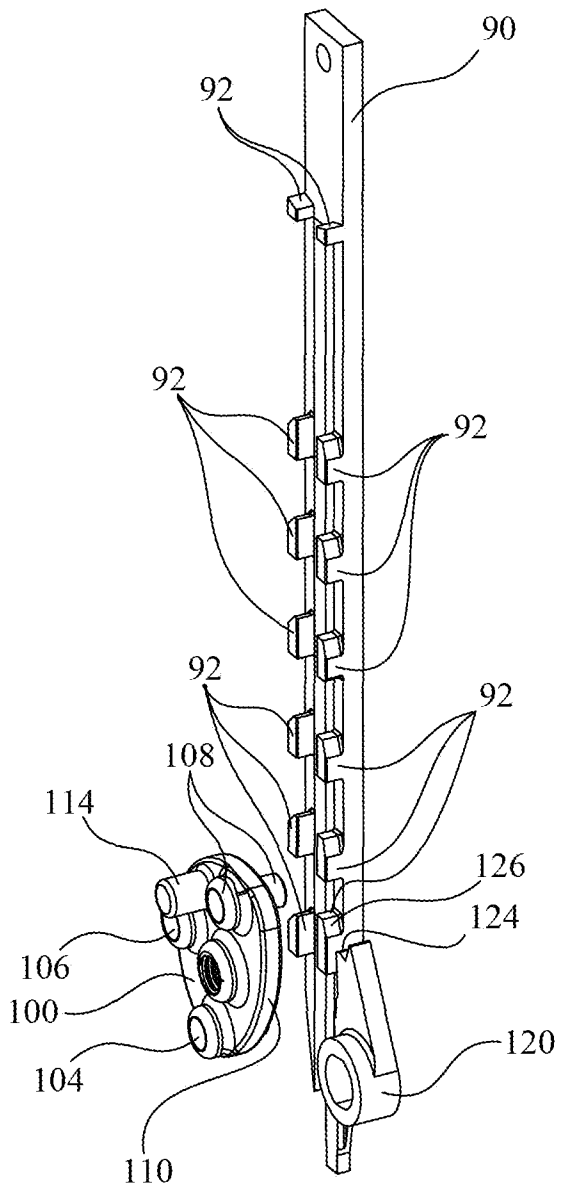

Fig. 7

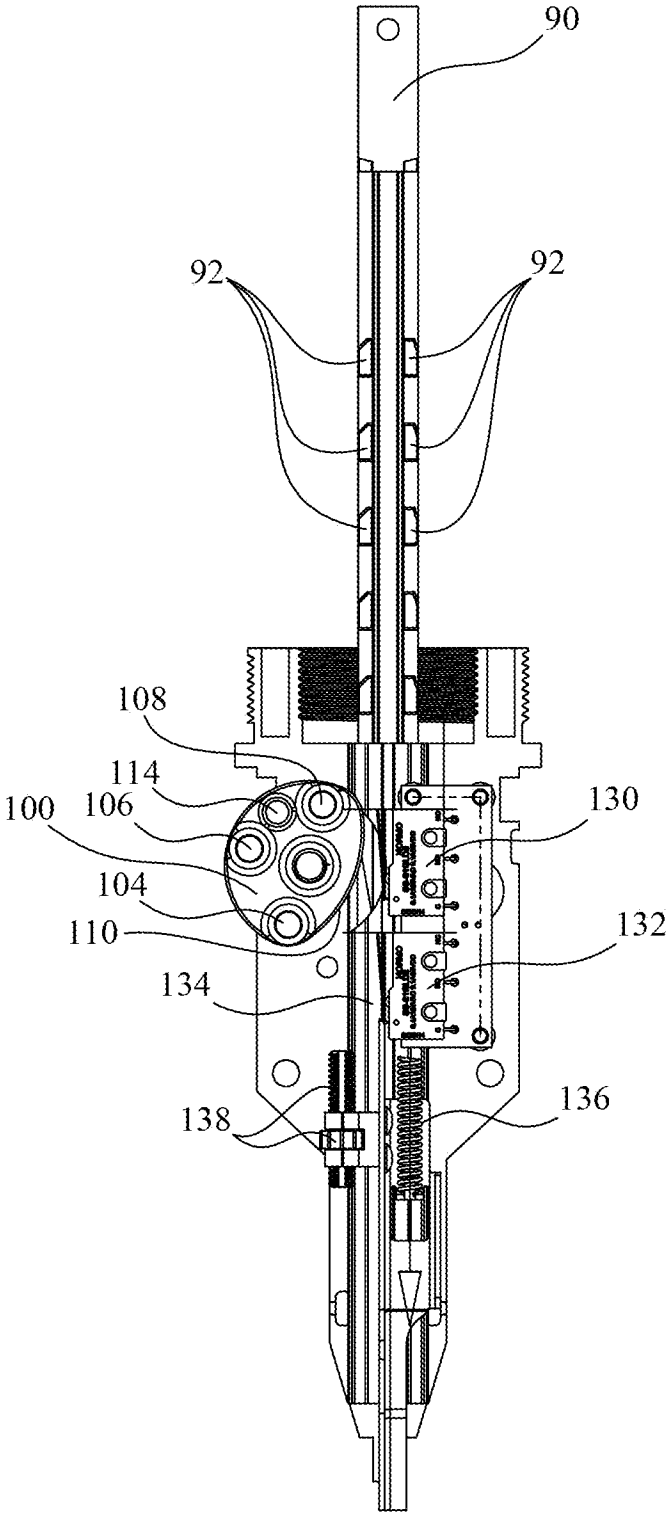

Fig. 8

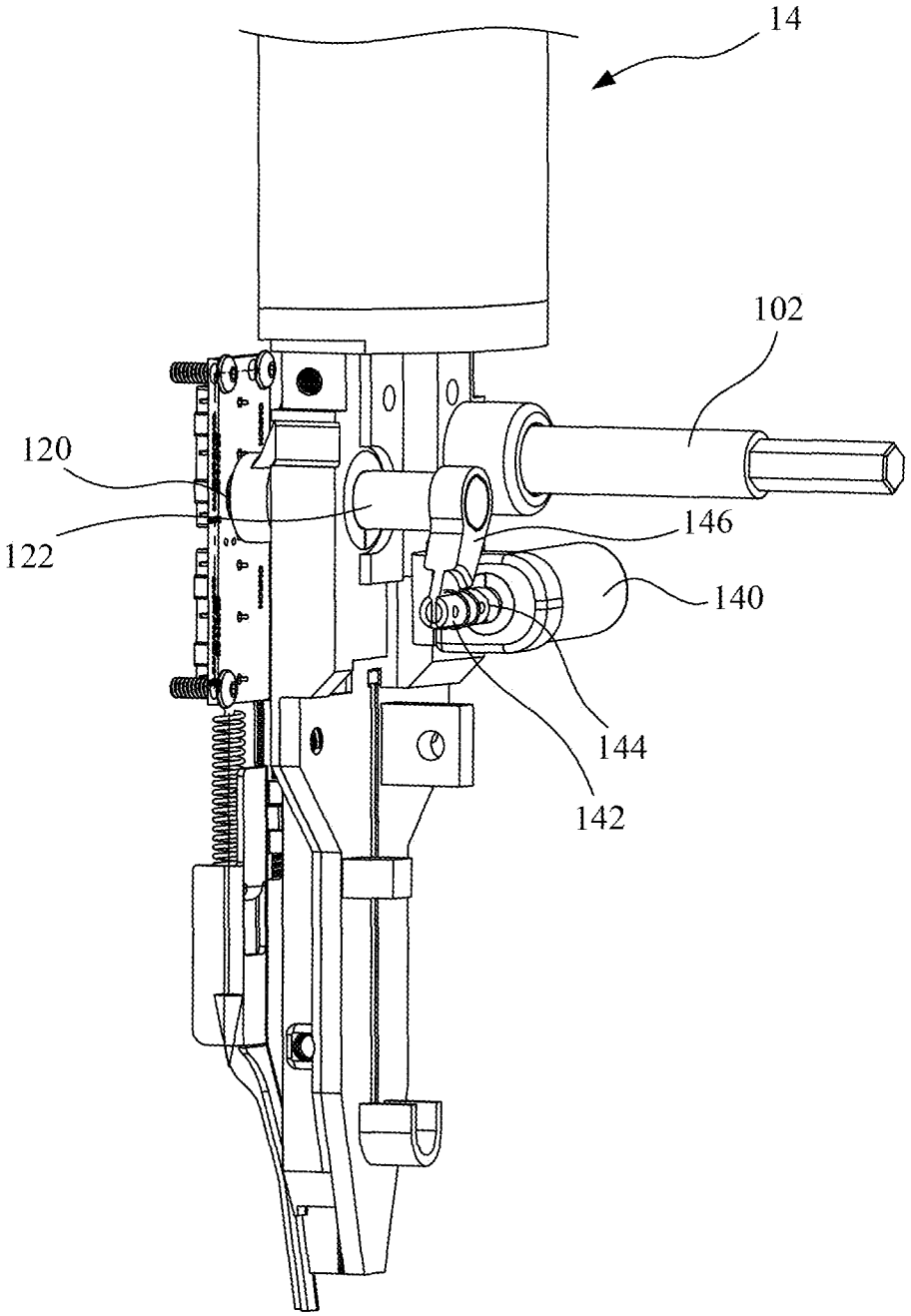

Fig. 9

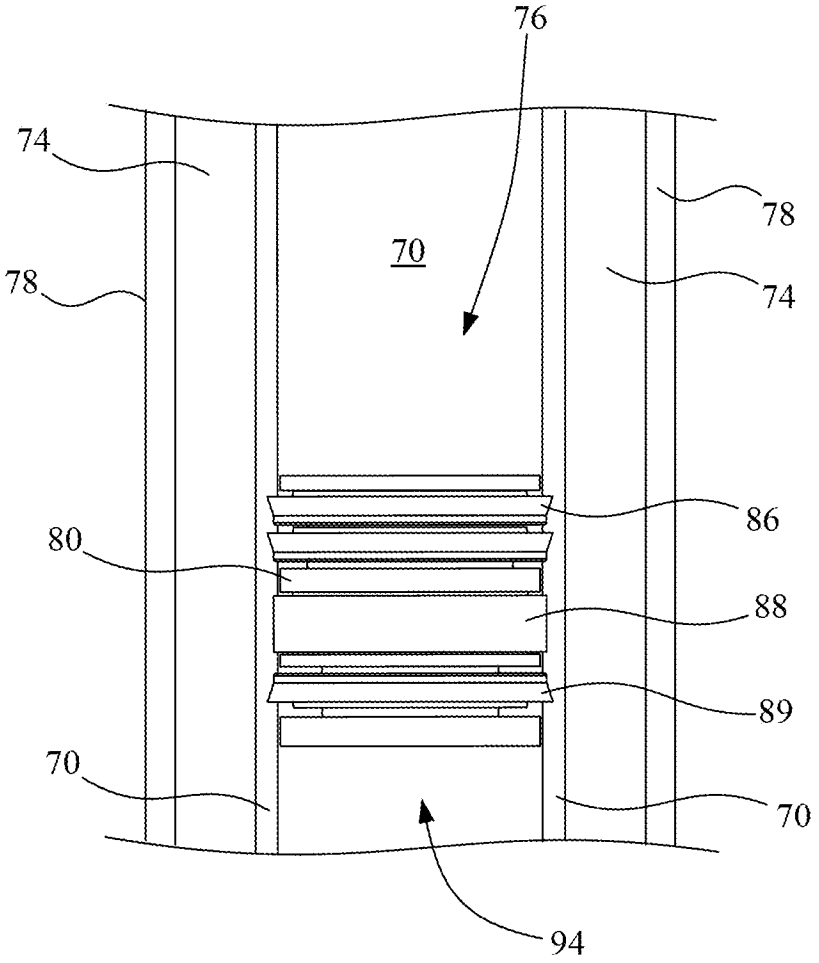

Fig. 10

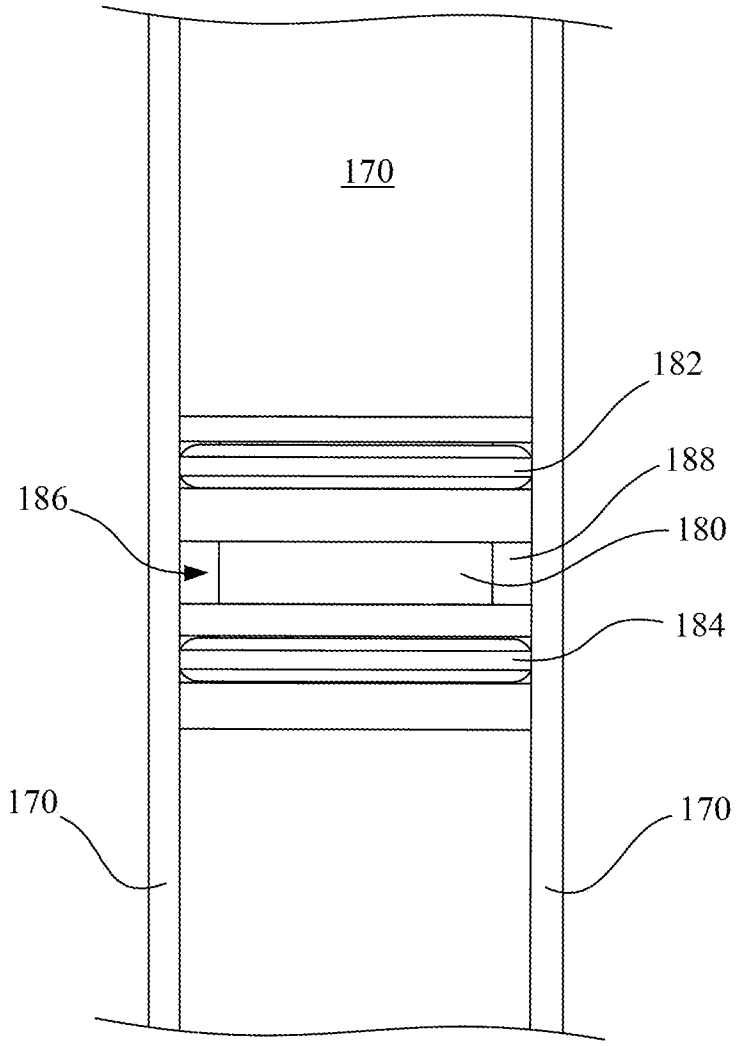

Fig. 11

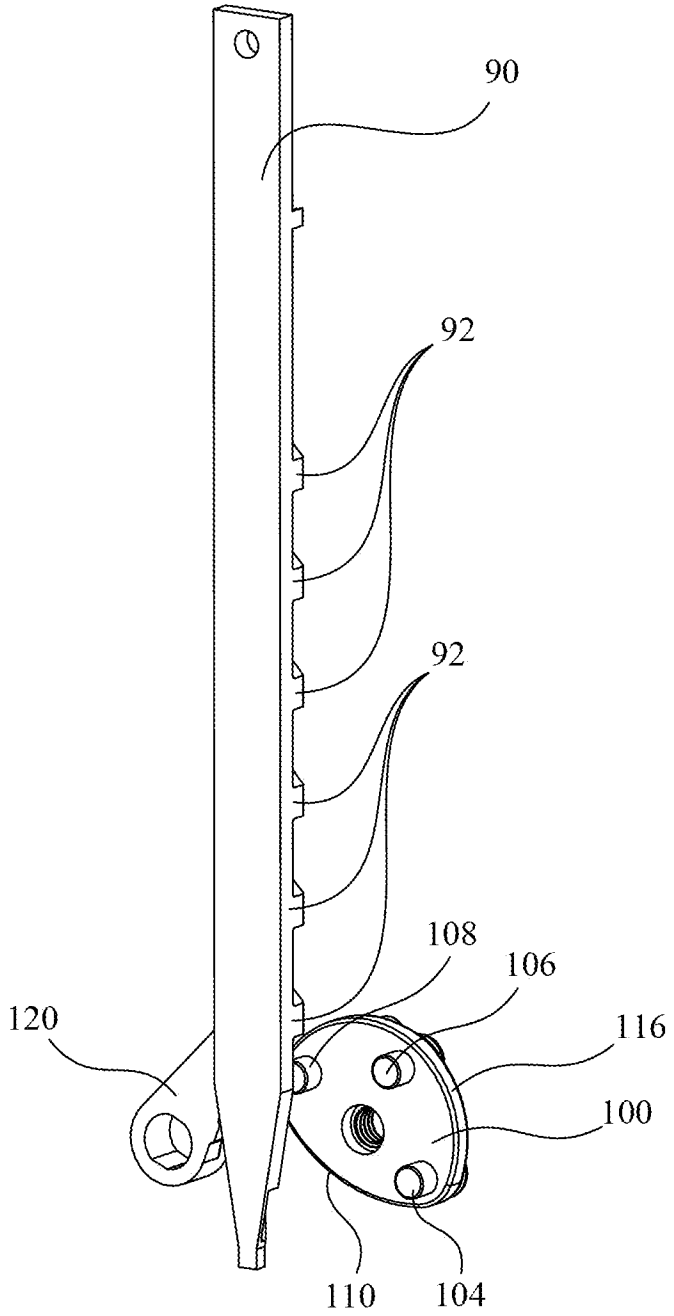

Fig. 12

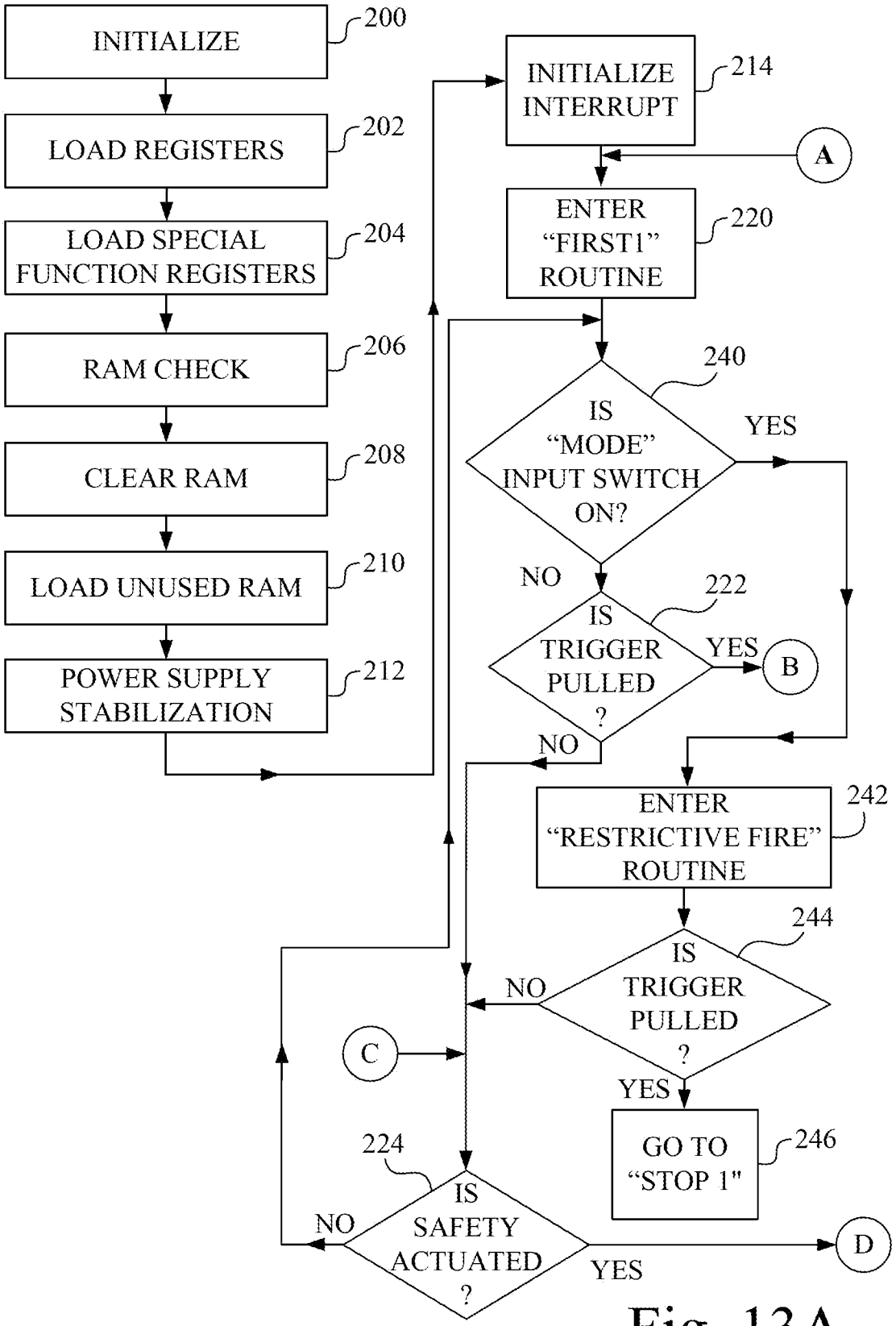
INITIALIZE
200
LOAD REGISTERS
202
LOAD SPECIAL FUNCTION REGISTERS
204
RAM CHECK
206
CLEAR RAM
208
LOAD UNUSED RAM
210
POWER SUPPLY STABILIZATION
212
INITIALIZE INTERRUPT
214
A
ENTER "FIRST1" ROUTINE
220
240
IS "MODE" INPUT SWITCH ON?
YES
NO
222
IS TRIGGER PULLED ?
YES
B
NO
ENTER "RESTRICTIVE FIRE" ROUTINE
242
244
IS TRIGGER PULLED ?
NO
C
YES
GO TO "STOP 1"
246
224
IS SAFETY ACTUATED ?
NO
YES
D

Fig. 13A

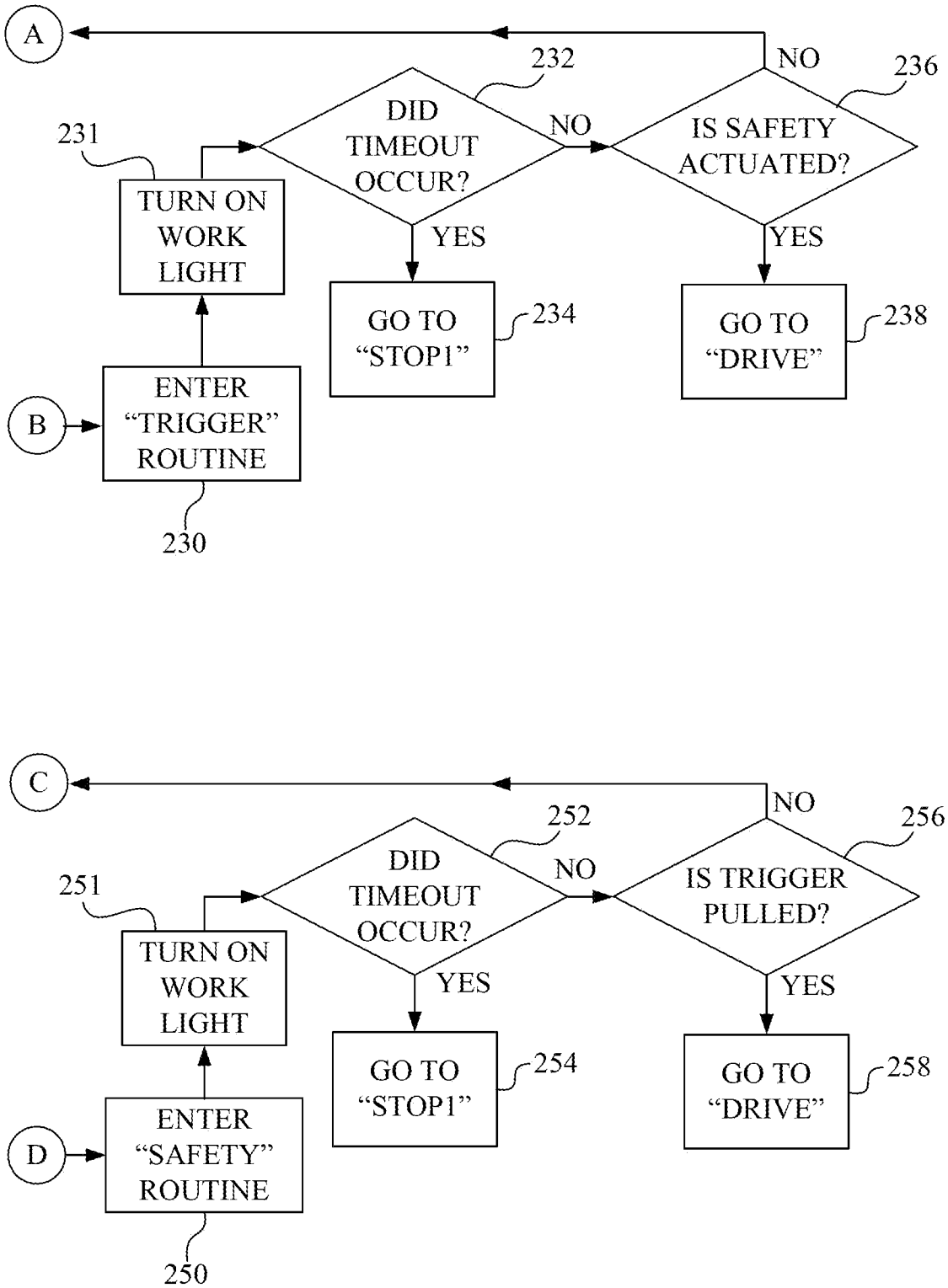
A
NO
232
236
DID TIMEOUT OCCUR?
NO
IS SAFETY ACTUATED?
231
TURN ON WORK LIGHT
YES
YES
GO TO "STOP1"
234
GO TO "DRIVE"
238
ENTER "TRIGGER" ROUTINE
B
230
C
NO
252
256
DID TIMEOUT OCCUR?
NO
IS TRIGGER PULLED?
251
TURN ON WORK LIGHT
YES
YES
GO TO "STOP1"
254
GO TO "DRIVE"
258
ENTER "SAFETY" ROUTINE
D
250

Fig. 13B

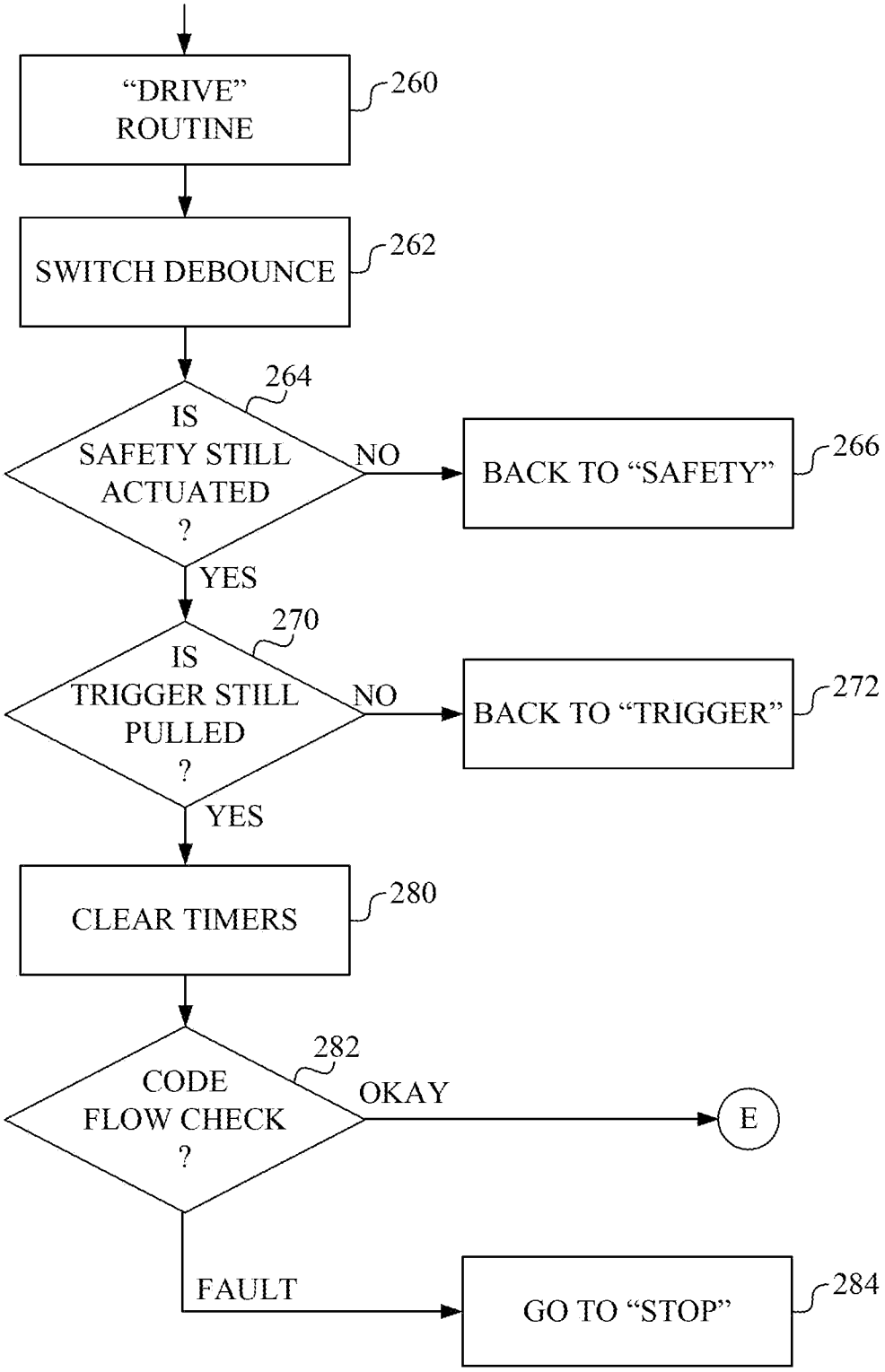
"DRIVE" ROUTINE
260
SWITCH DEBOUNCE
262
264
IS SAFETY STILL ACTUATED ?
NO
BACK TO "SAFETY"
266
YES
270
IS TRIGGER STILL PULLED ?
NO
BACK TO "TRIGGER"
272
YES
CLEAR TIMERS
280
282
CODE FLOW CHECK ?
OKAY
E
FAULT
GO TO "STOP"
284

Fig. 14A

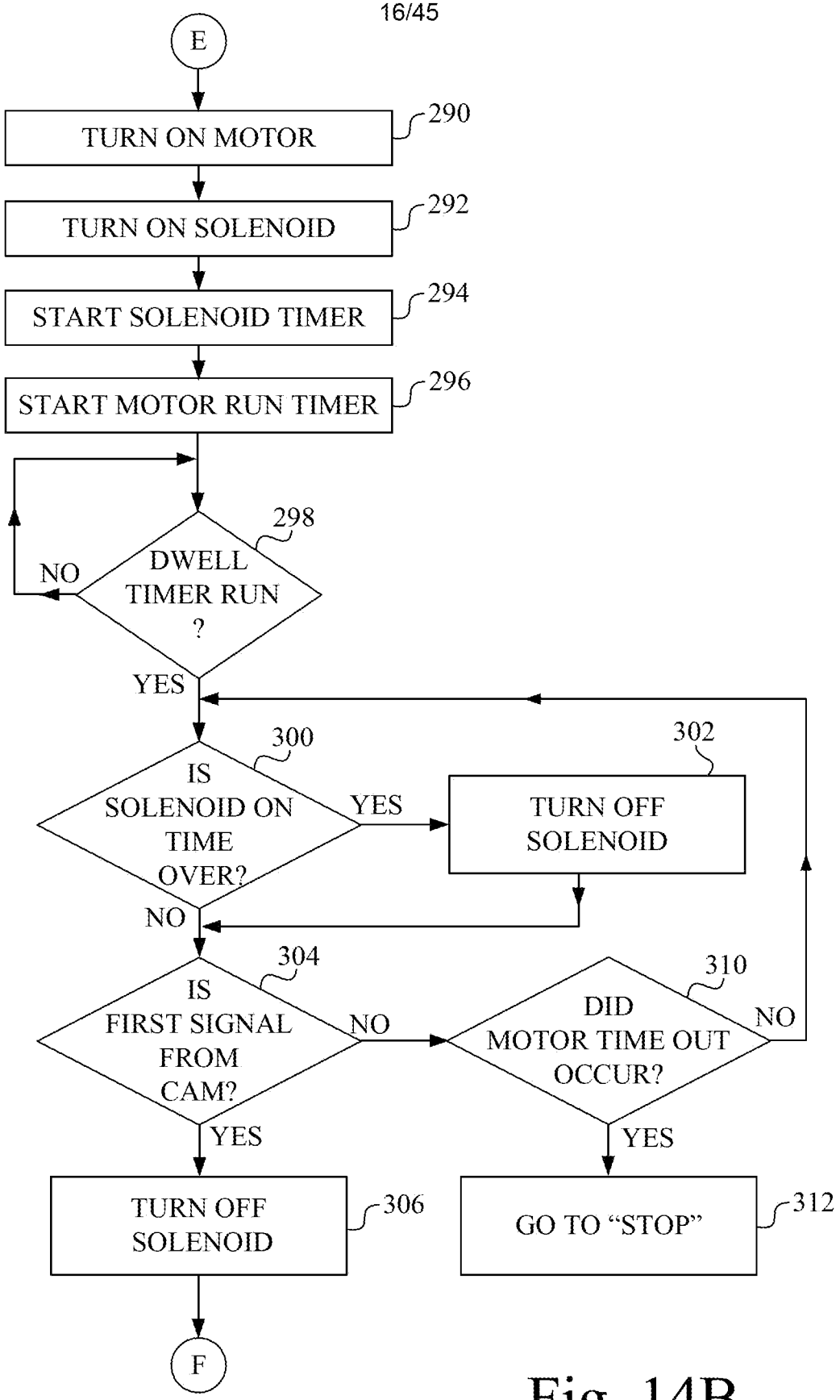
E
TURN ON MOTOR
290
TURN ON SOLENOID
292
START SOLENOID TIMER
294
START MOTOR RUN TIMER
296
298
DWELL TIMER RUN ?
NO
YES
300
IS SOLENOID ON TIME OVER?
YES
302
TURN OFF SOLENOID
NO
304
IS FIRST SIGNAL FROM CAM?
NO
310
DID MOTOR TIME OUT OCCUR?
NO
YES
YES
TURN OFF SOLENOID
306
GO TO "STOP"
312
F

Fig. 14B

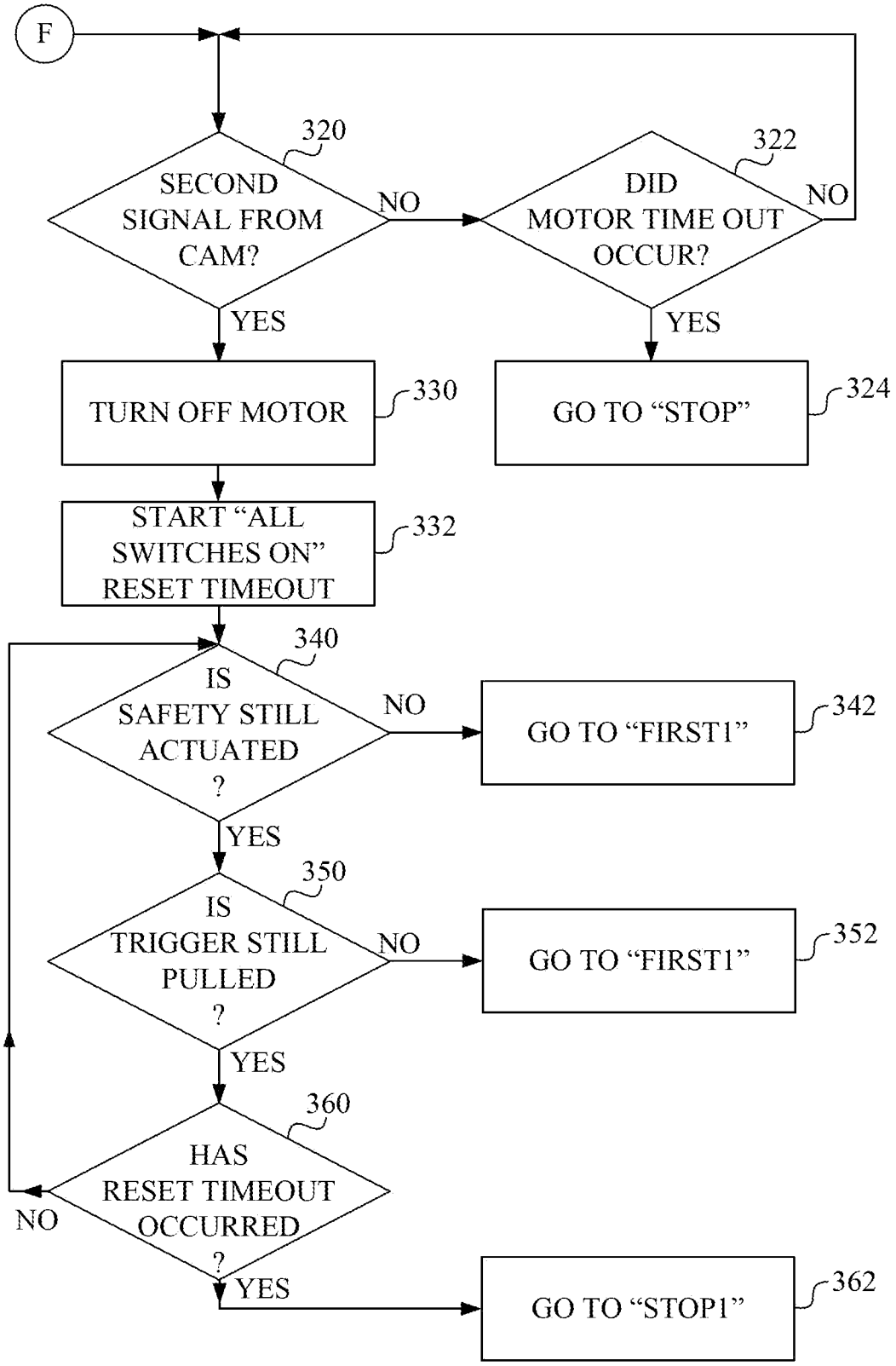
F
320
SECOND SIGNAL FROM CAM?
NO
322
DID MOTOR TIME OUT OCCUR?
NO
YES
YES
TURN OFF MOTOR
330
GO TO "STOP"
324
START "ALL SWITCHES ON" RESET TIMEOUT
332
340
IS SAFETY STILL ACTUATED ?
NO
GO TO "FIRST1"
342
YES
350
IS TRIGGER STILL PULLED ?
NO
GO TO "FIRST1"
352
YES
360
HAS RESET TIMEOUT OCCURRED ?
NO
YES
GO TO "STOP1"
362

Fig. 14C

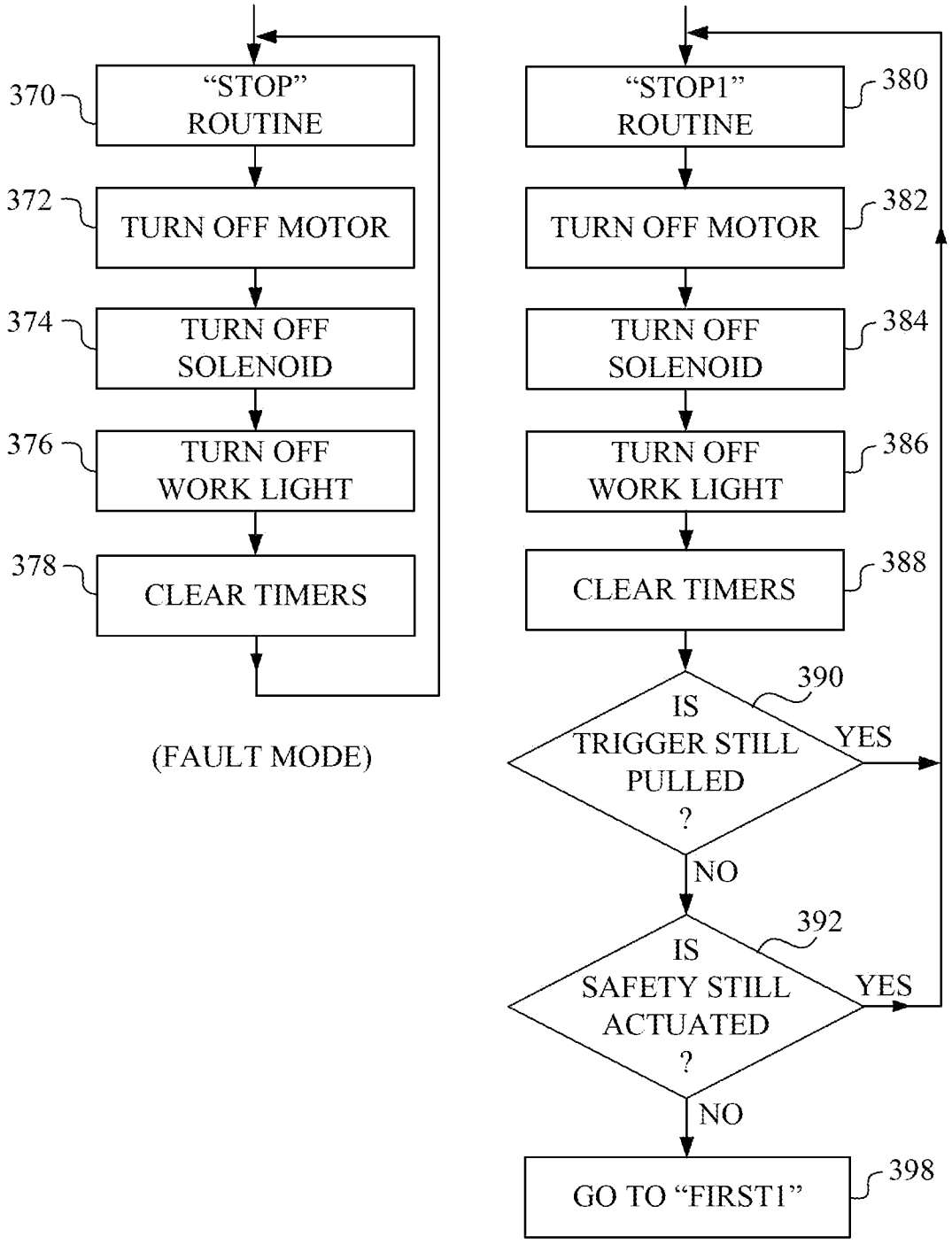
370
"STOP" ROUTINE
372
TURN OFF MOTOR
374
TURN OFF SOLENOID
376
TURN OFF WORK LIGHT
378
CLEAR TIMERS
(FAULT MODE)
"STOP1" ROUTINE
380
TURN OFF MOTOR
382
TURN OFF SOLENOID
384
TURN OFF WORK LIGHT
386
CLEAR TIMERS
388
390
IS TRIGGER STILL PULLED ?
YES
NO
392
IS SAFETY STILL ACTUATED ?
YES
NO
GO TO "FIRST1"
398

Fig. 15

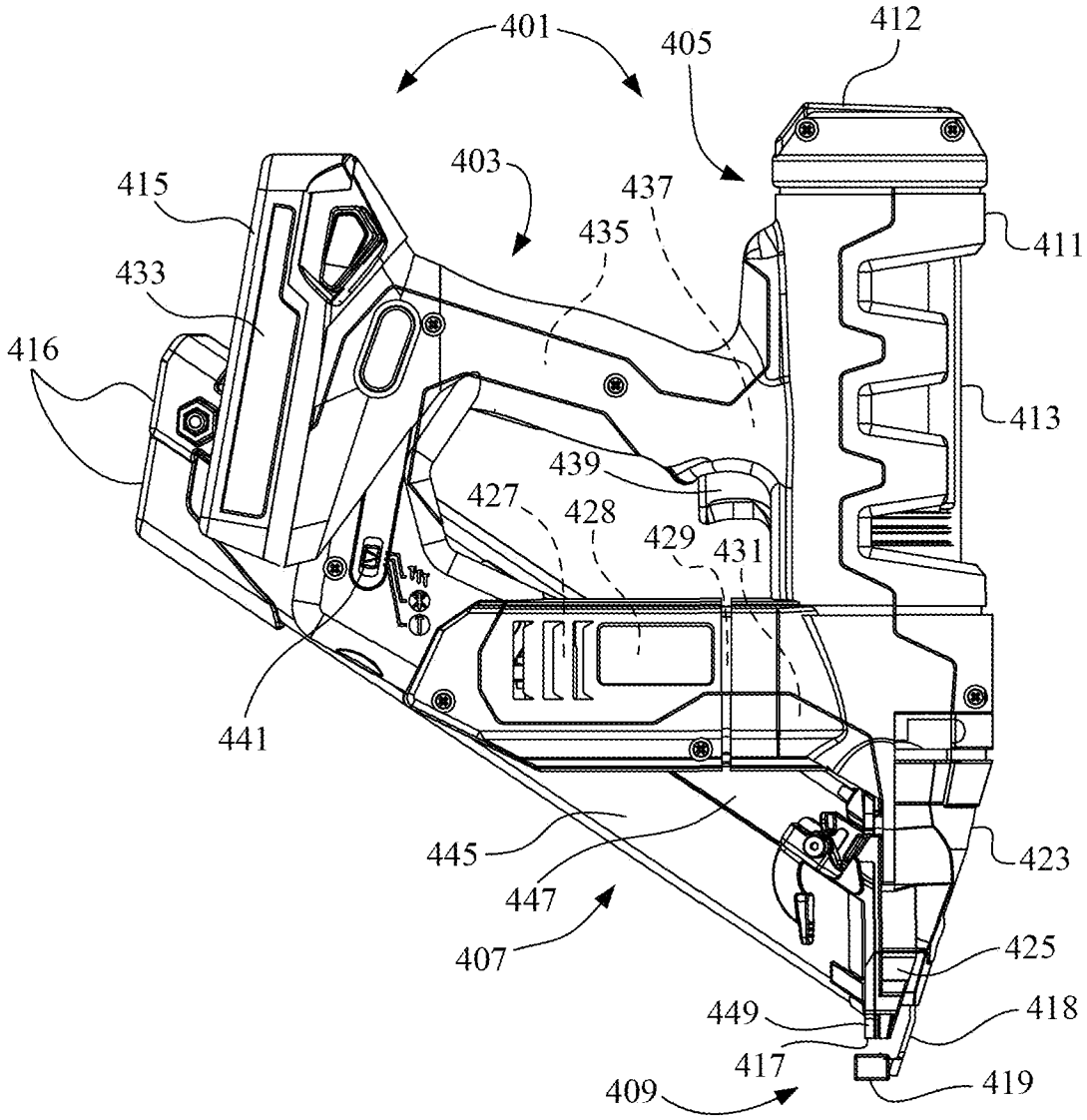
401
405
412
403
415
437
435
411
433
416
413
439
427
428
429
431
441
445
423
447
407
425
449
418
417
409
419

Fig. 16

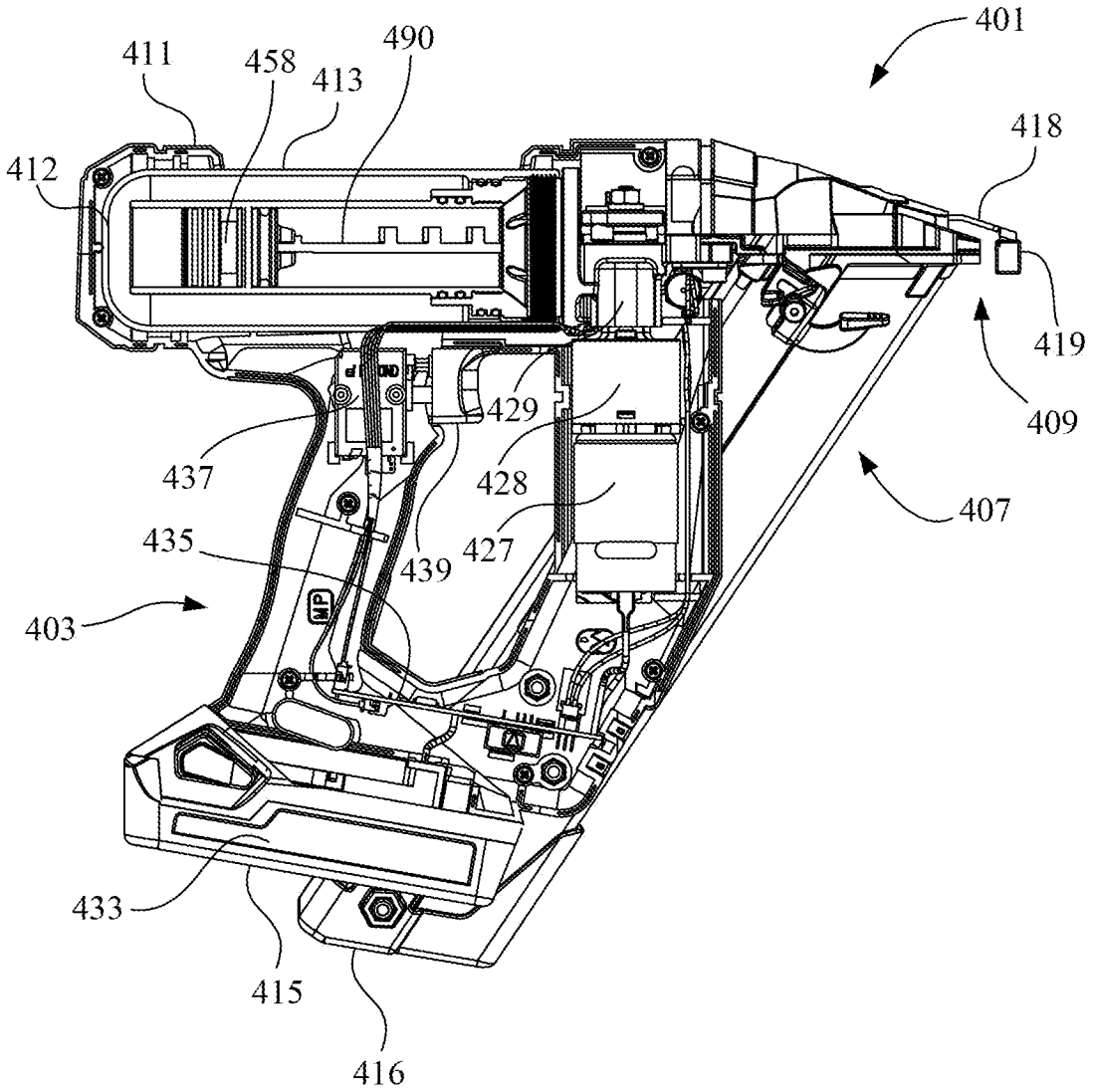
401
411
458
413
490
418
412
419
409
429
437
428
407
435
439
427
403
433
415
416

Fig. 17

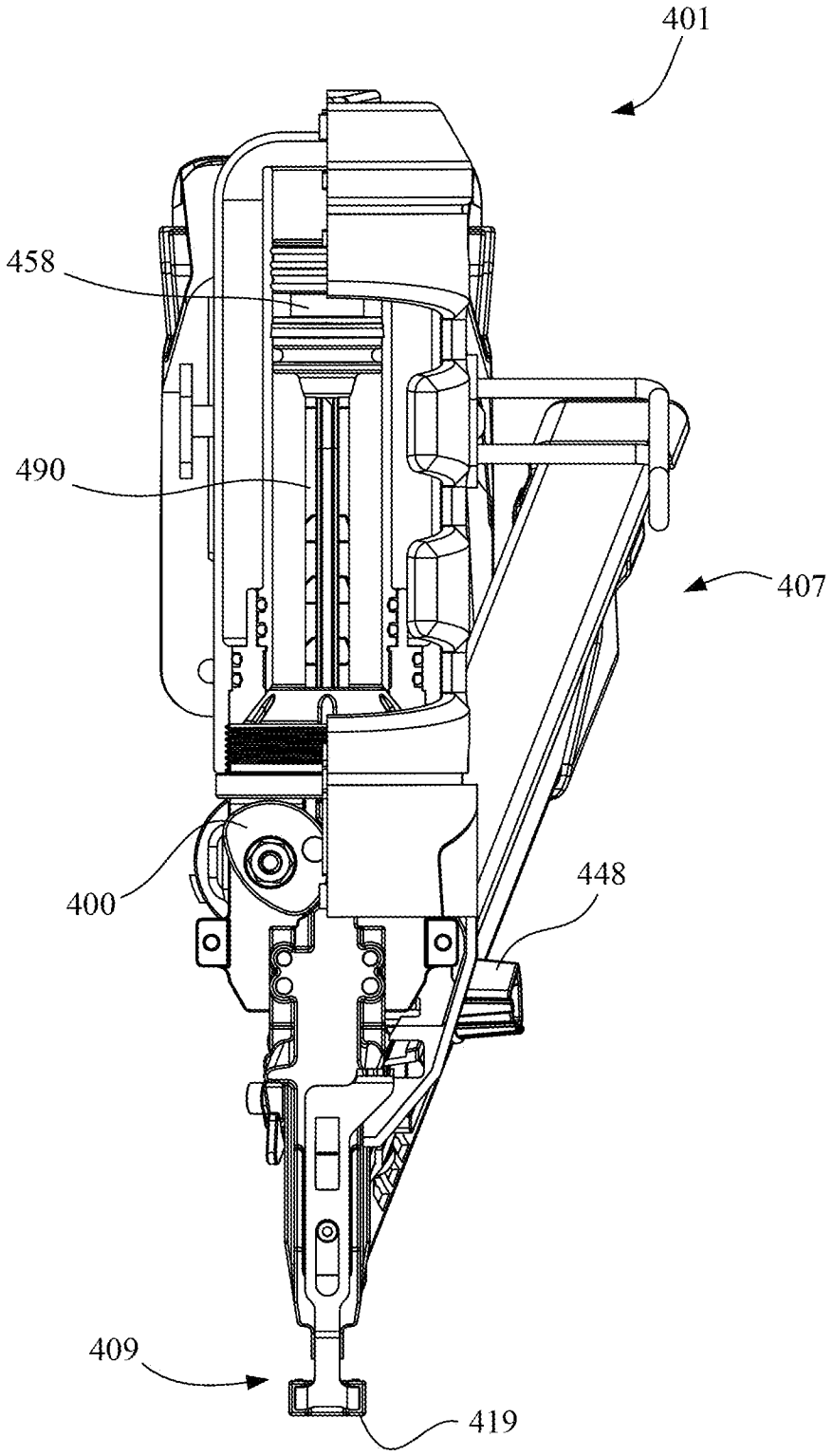

Fig. 18

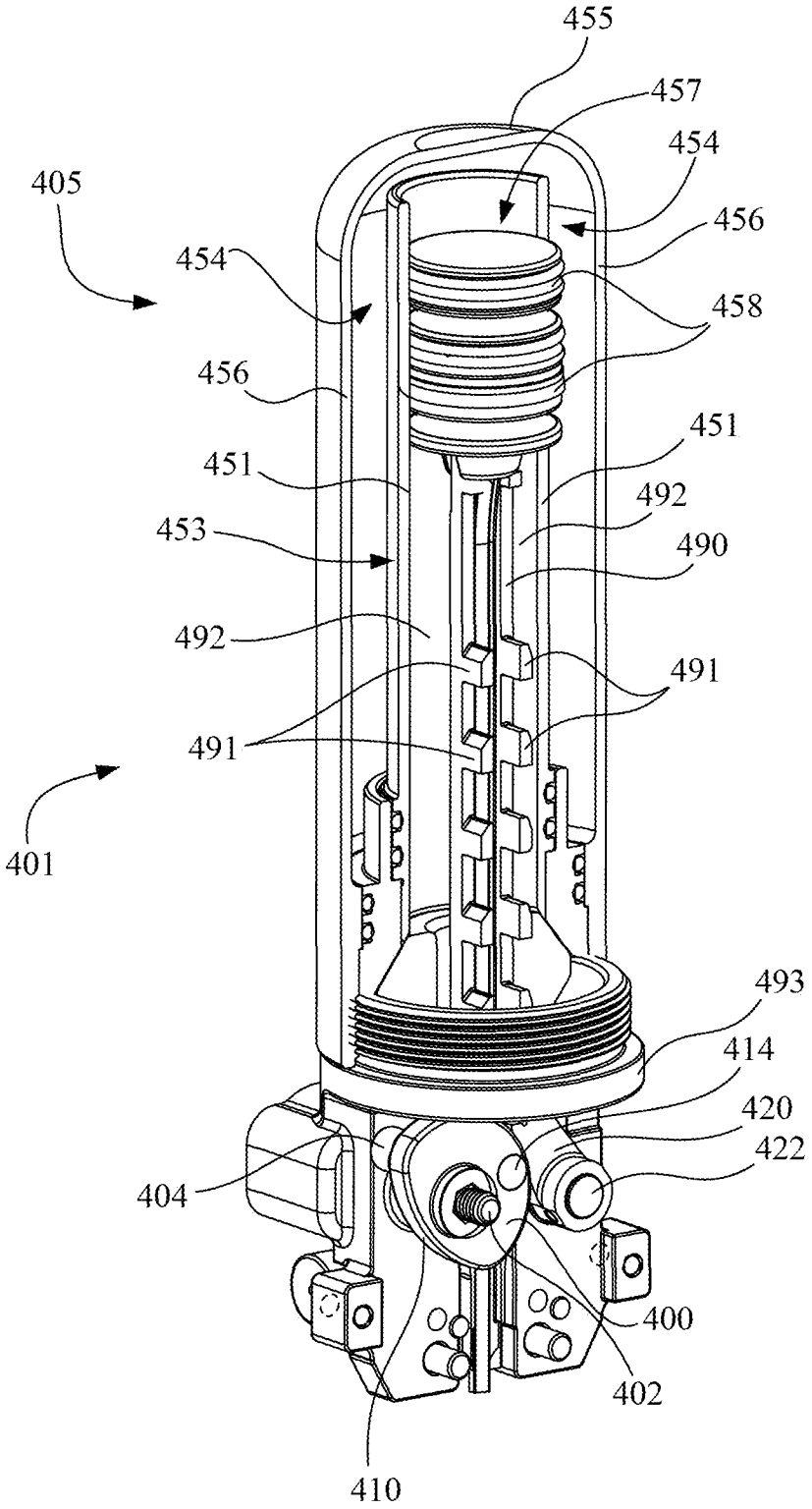
455
457
454
405
456
454
458
456
451
451
492
453
490
492
491
491
401
493
414
420
422
404
400
402
410

Fig. 19

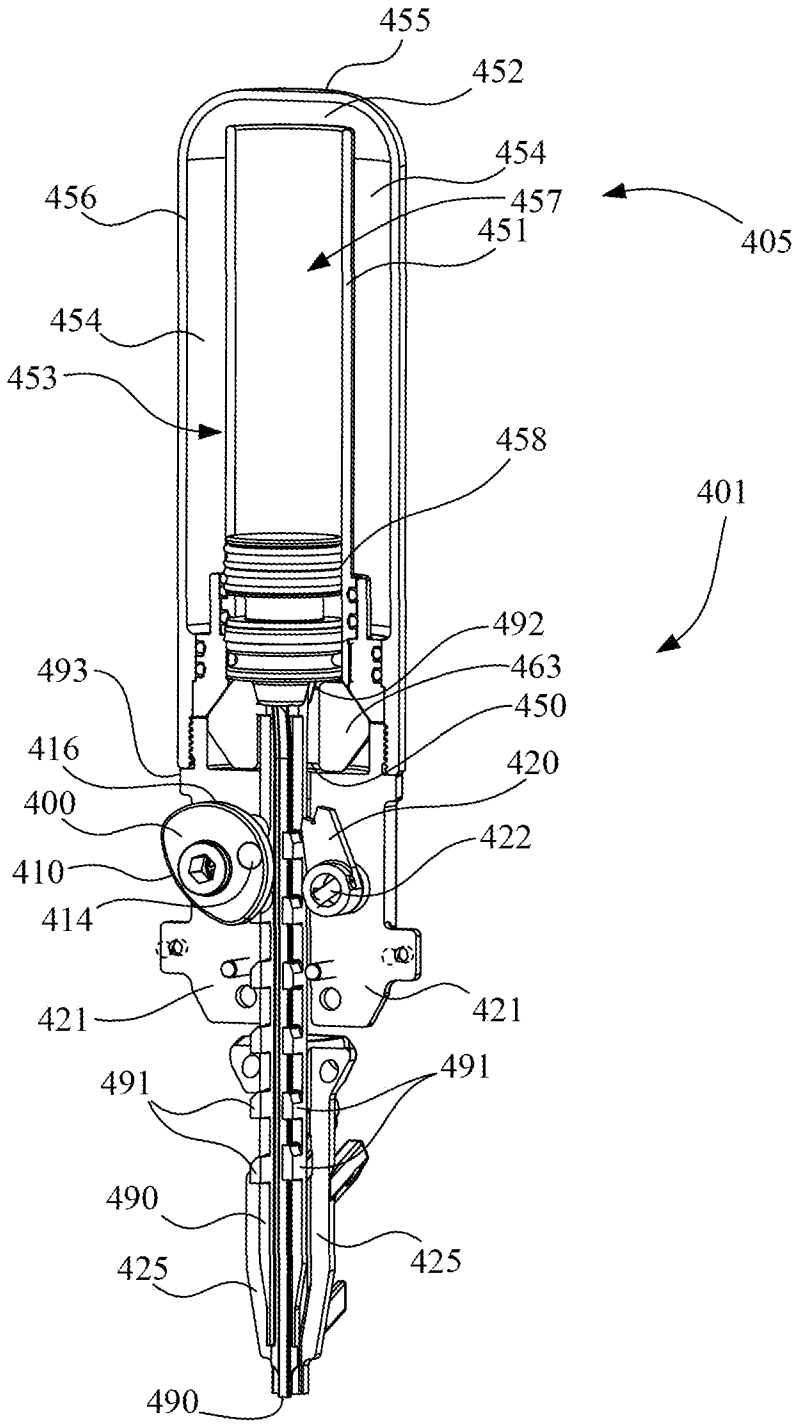
455
452
454
456
457
451
405
454
453
458
401
492
493
463
450
416
420
400
422
410
414
421
421
491
491
490
425
425
490

Fig. 20

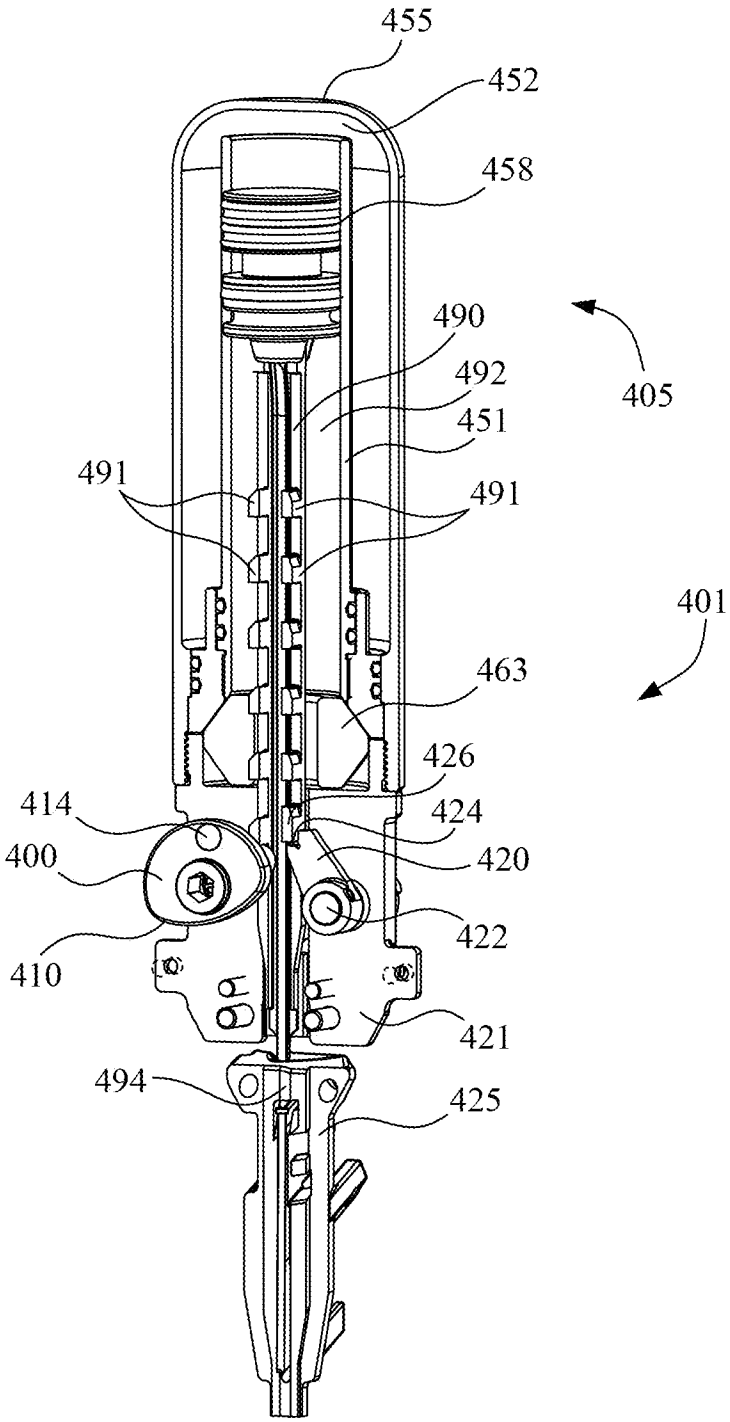
455
452
458
490
492
451
405
491
491
401
463
426
414
424
400
420
422
410
421
494
425

Fig. 21

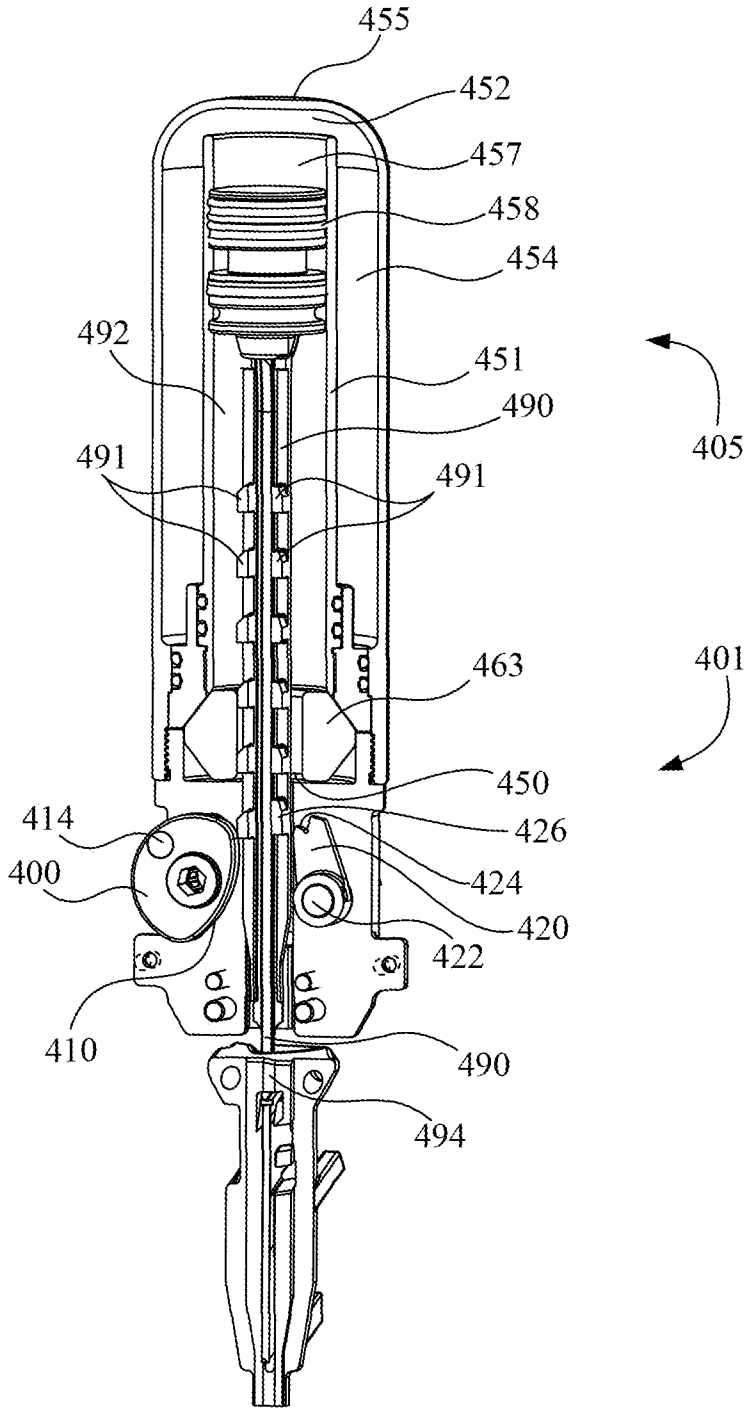
455
452
457
458
454
492
451
490
405
491
491
463
401
450
414
426
400
424
420
422
410
490
494

Fig. 22

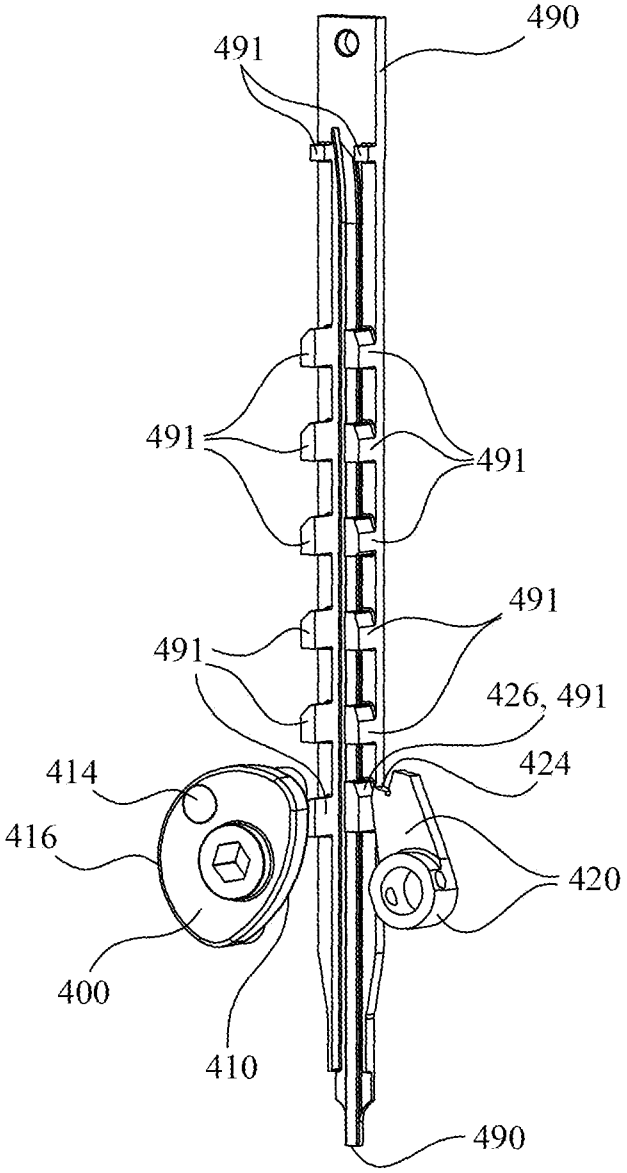

Fig. 23

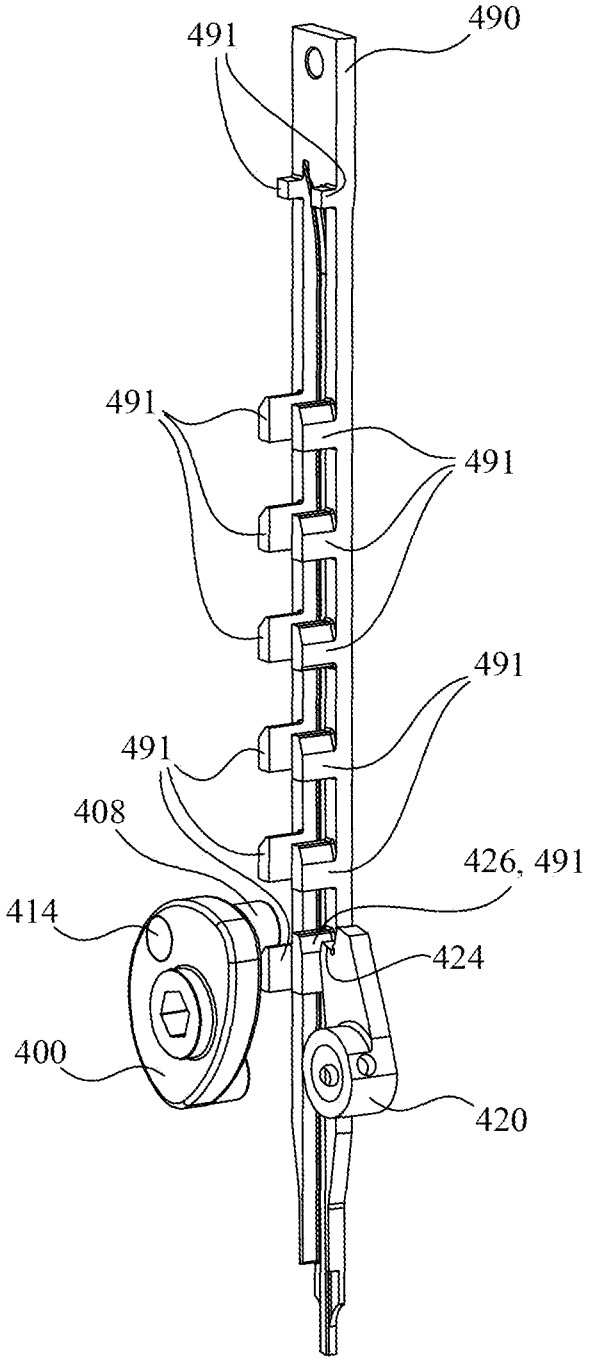

Fig. 24

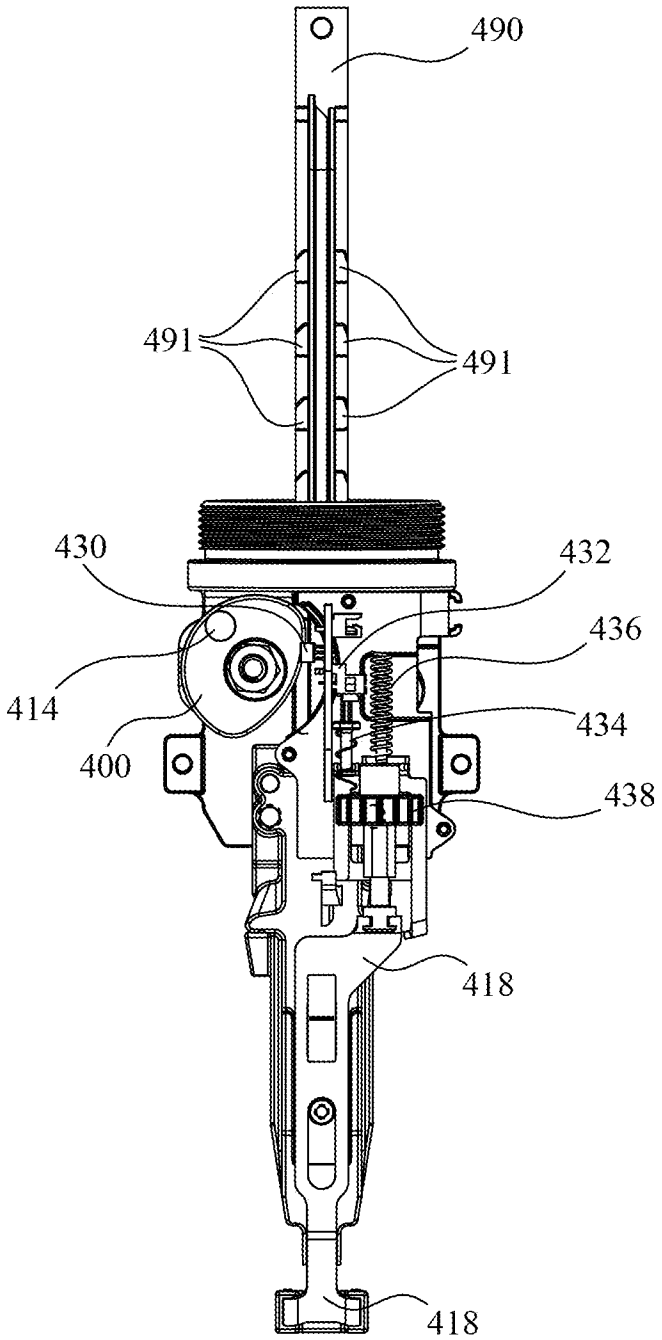

Fig. 25

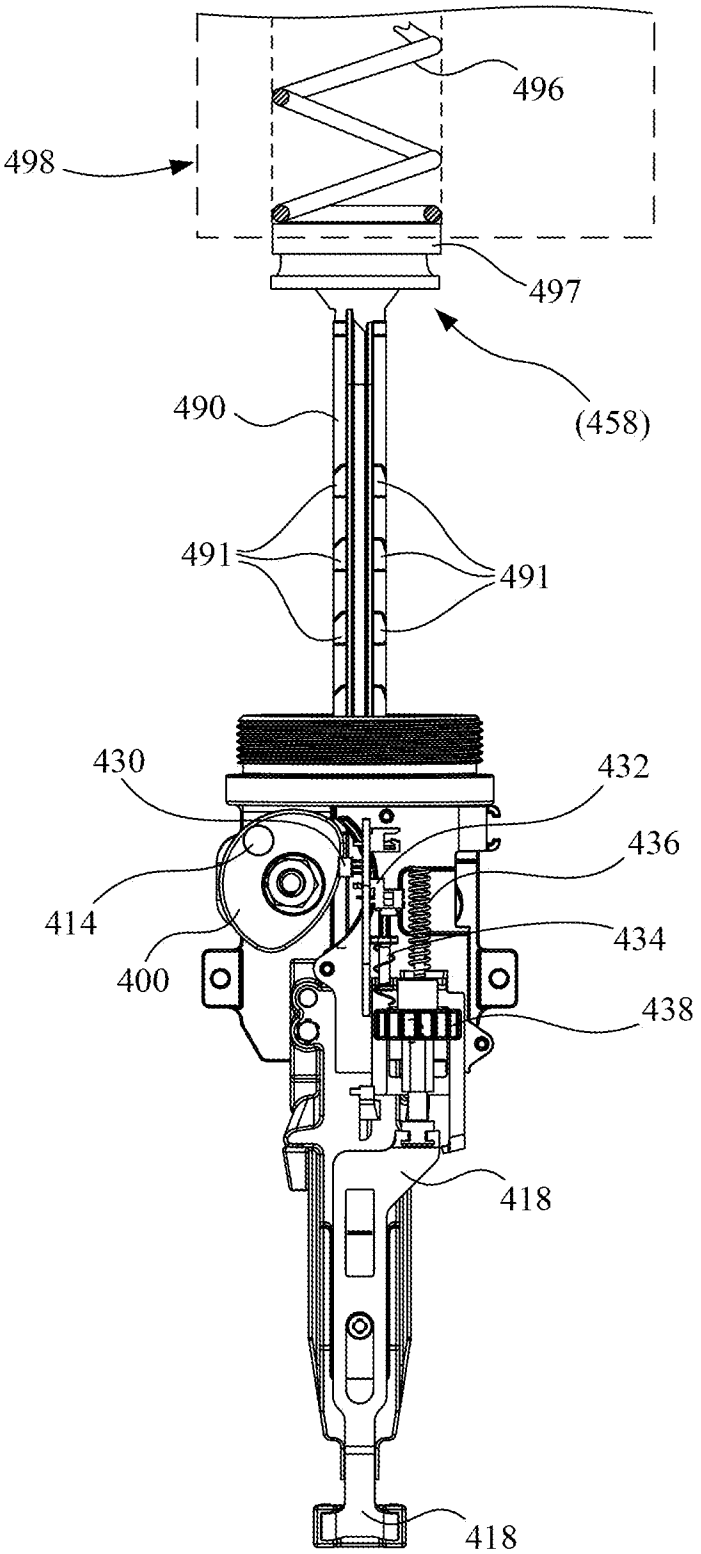

Fig. 26

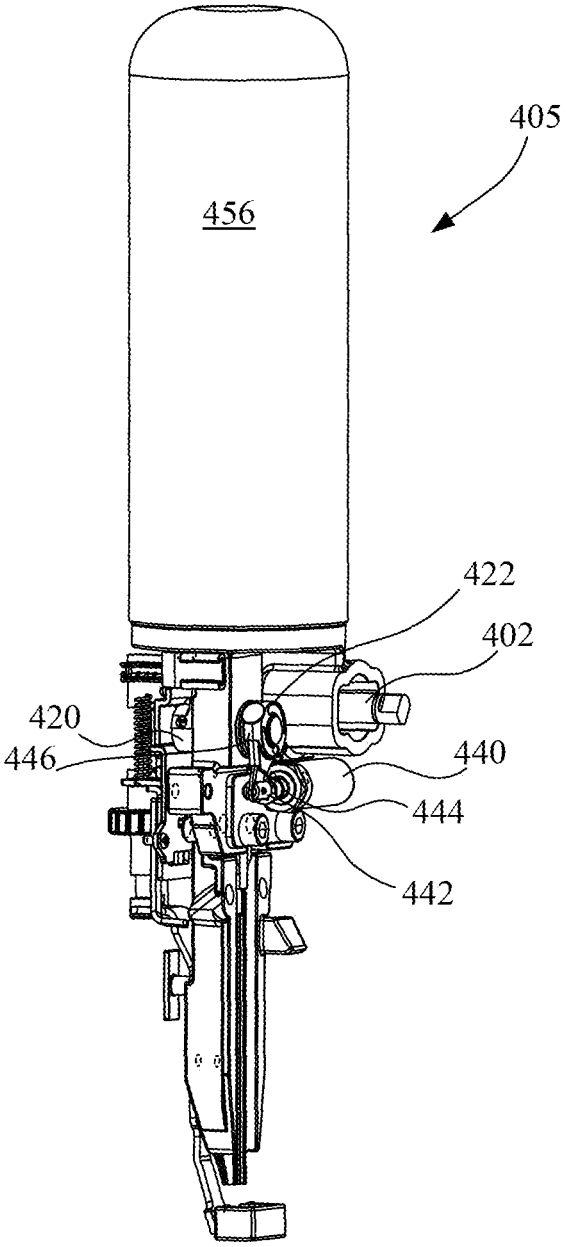

Fig. 27

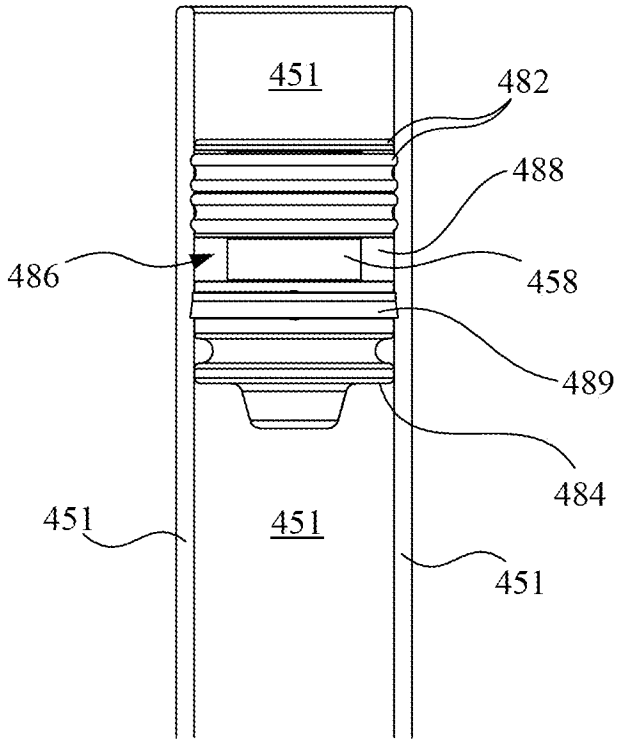

Fig. 28

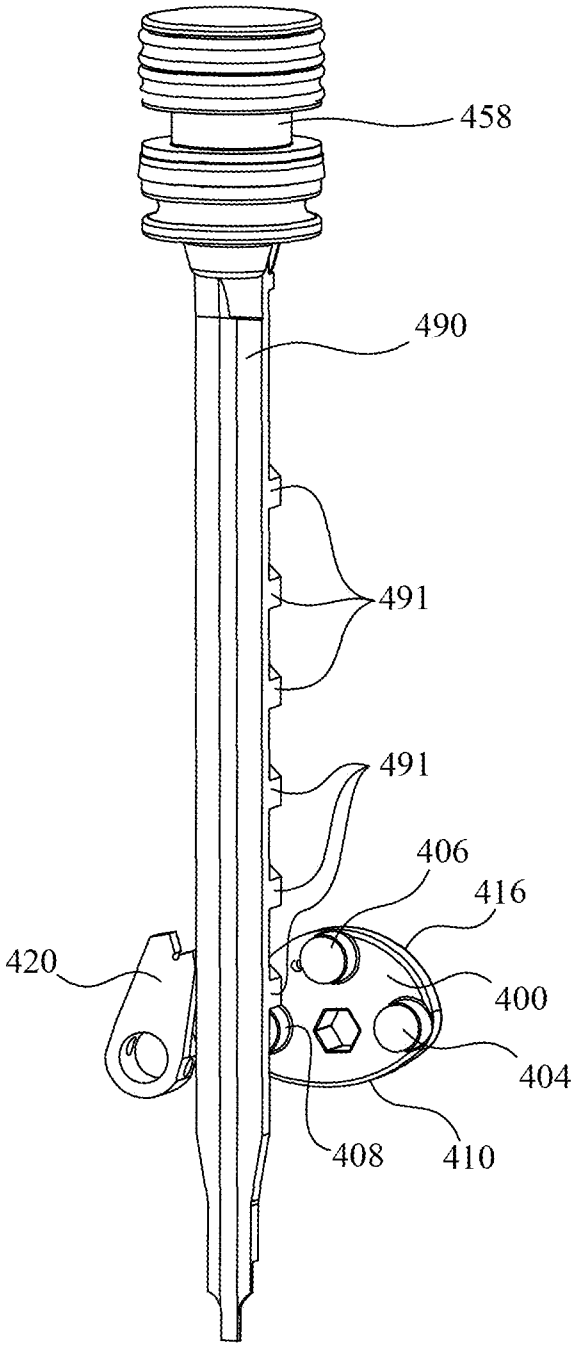

Fig. 29

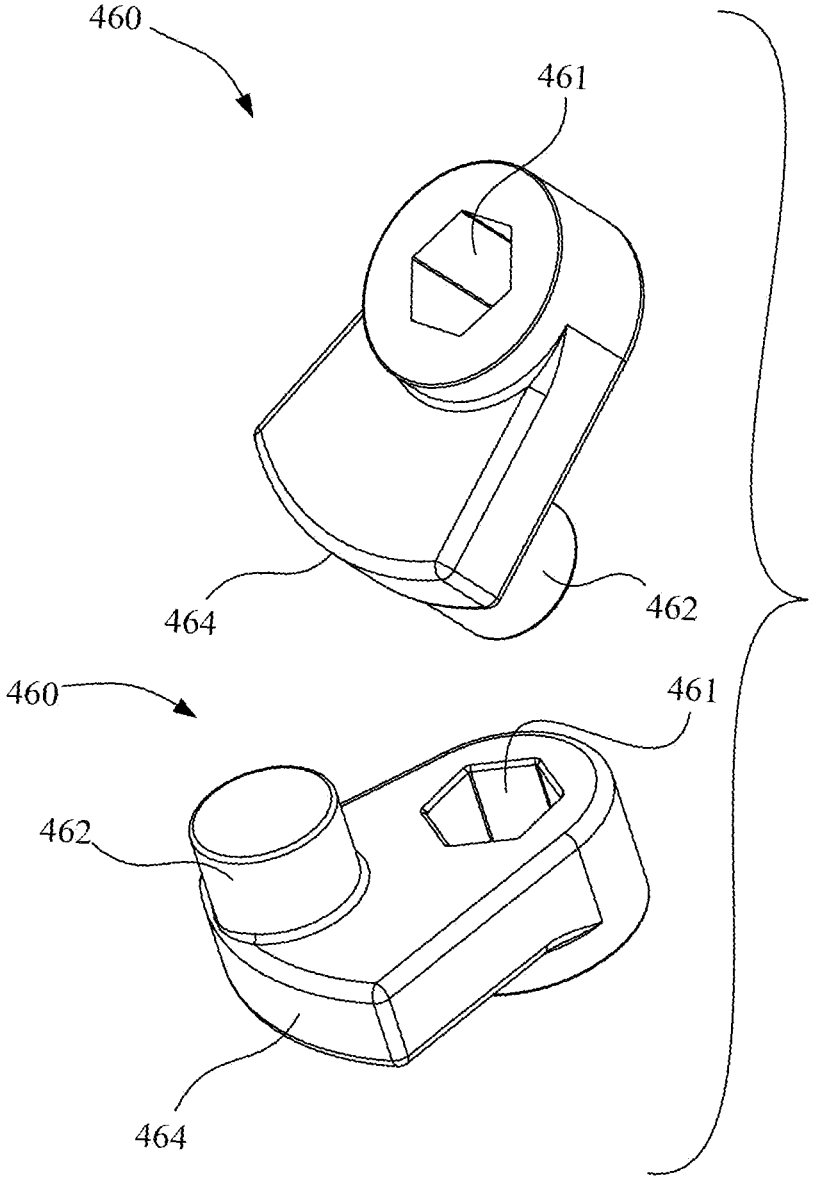

Fig. 30

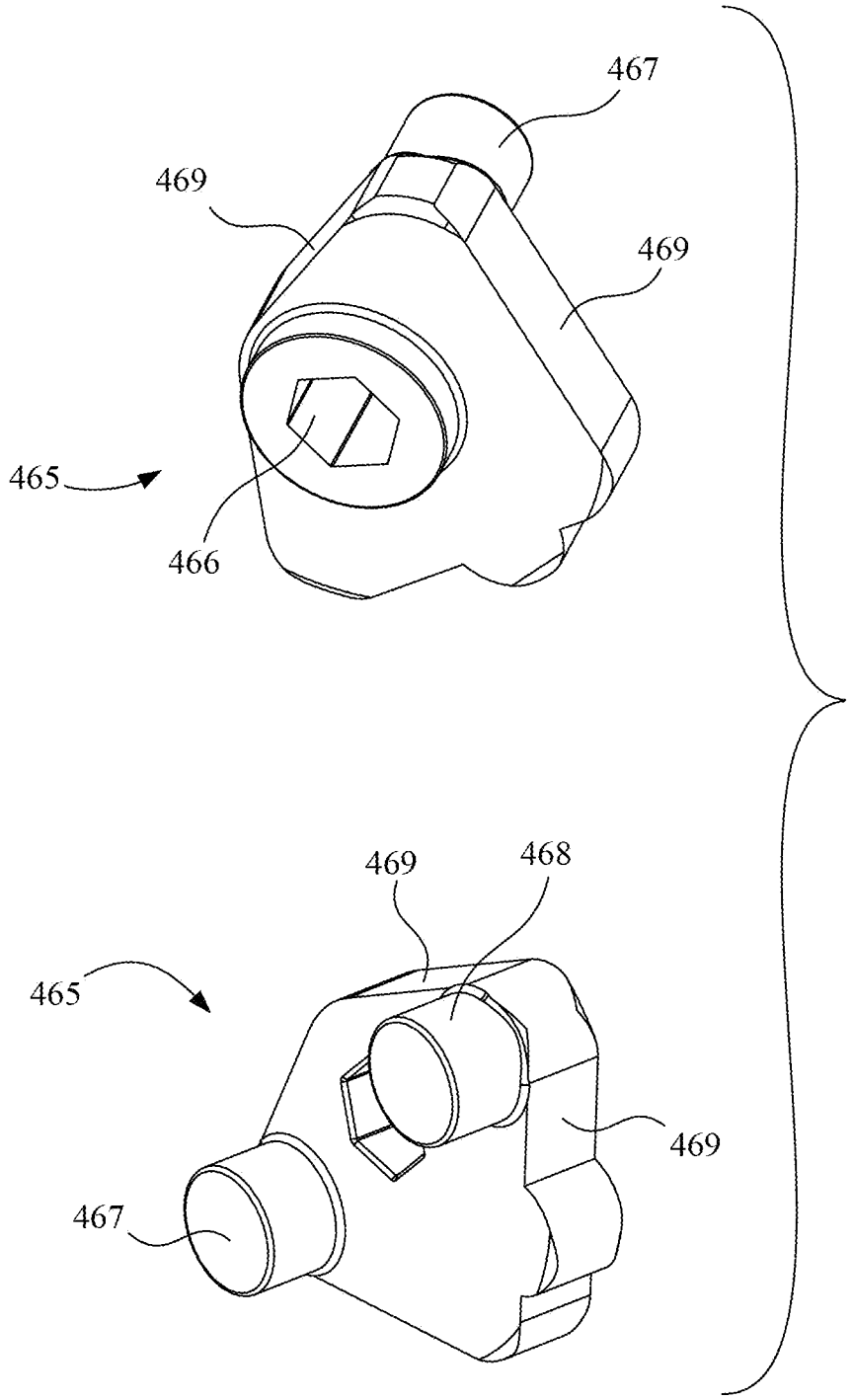

Fig. 31

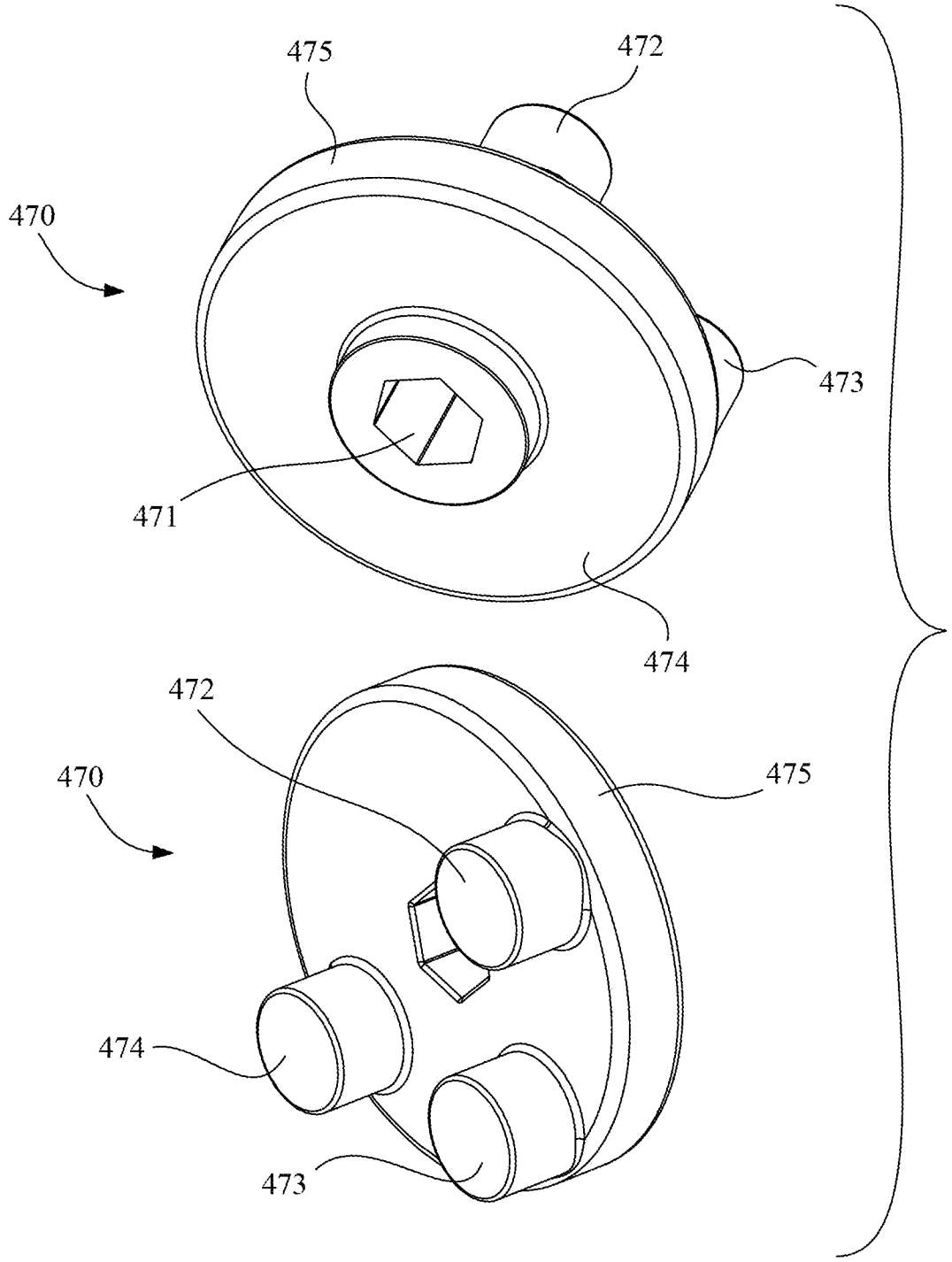

Fig. 32

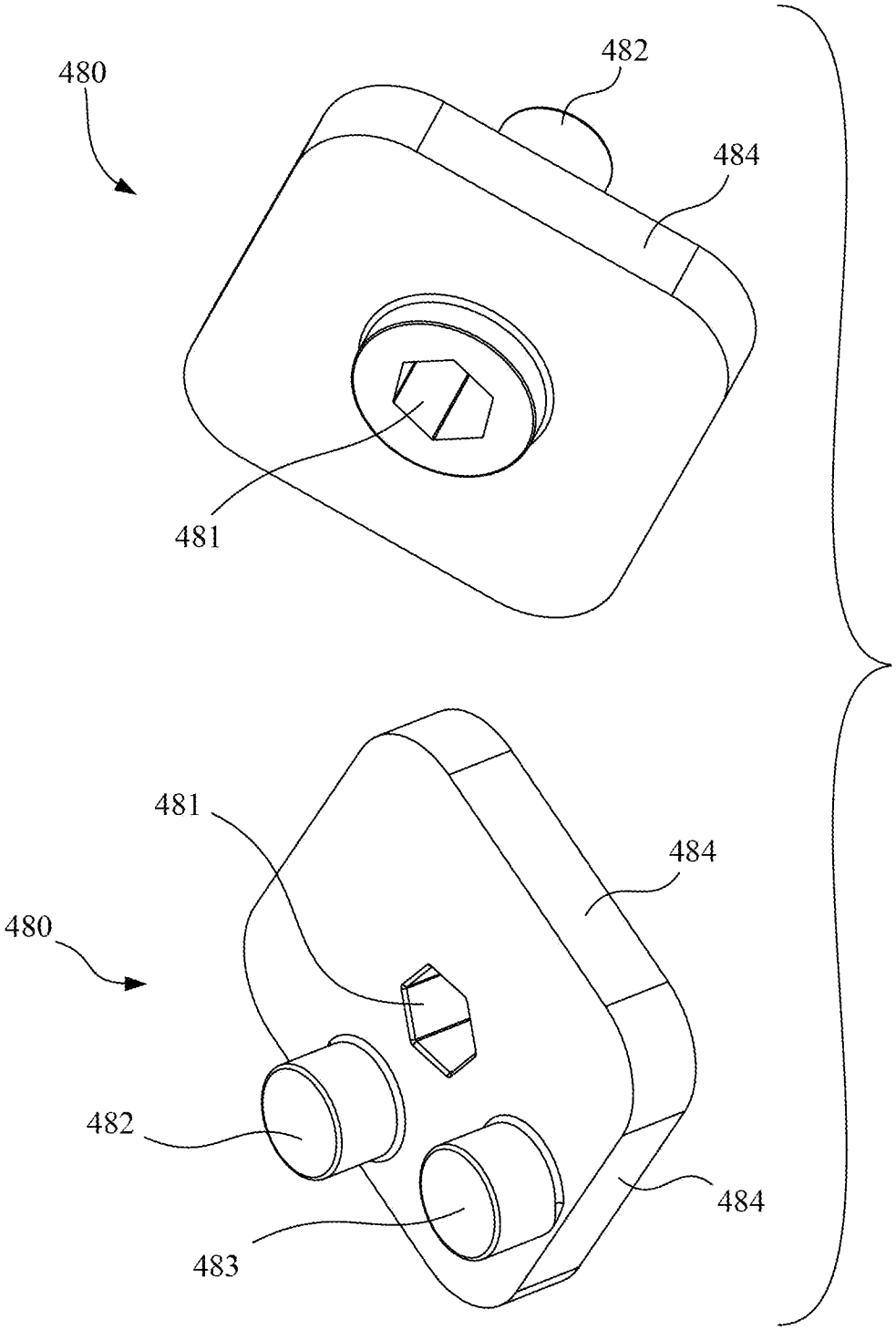

Fig. 33

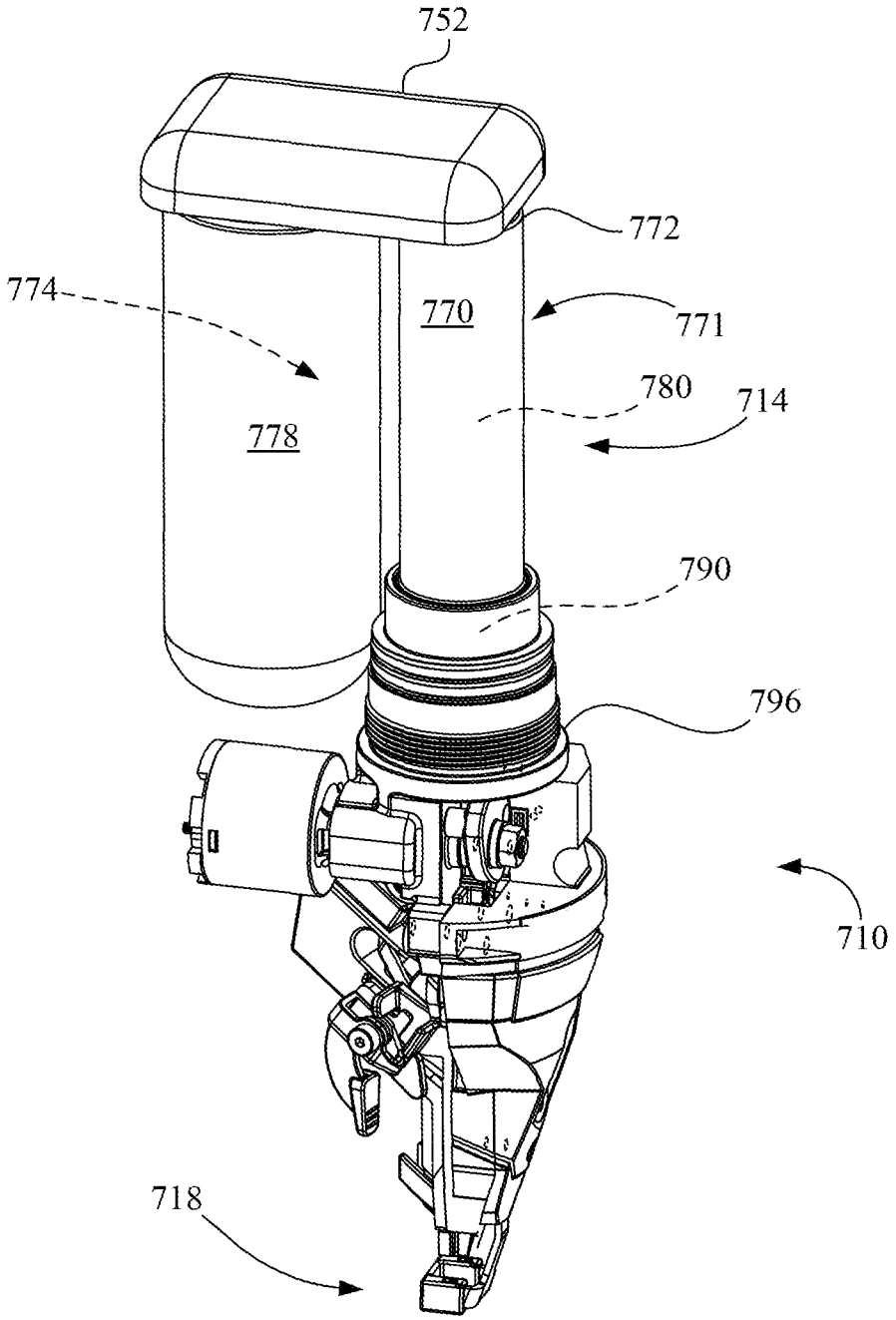

Fig. 34

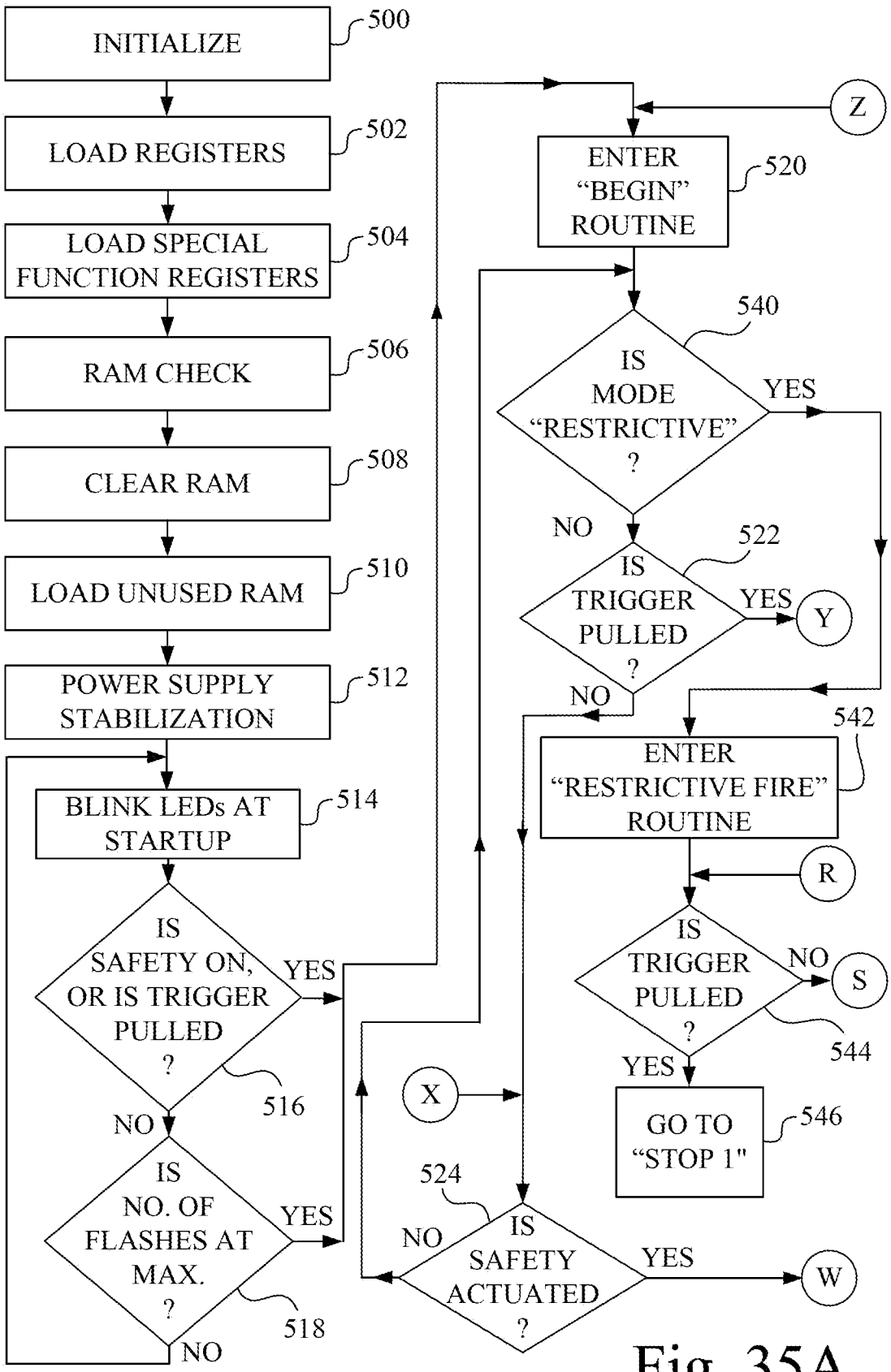
INITIALIZE
500
LOAD REGISTERS
502
LOAD SPECIAL FUNCTION REGISTERS
504
RAM CHECK
506
CLEAR RAM
508
LOAD UNUSED RAM
510
POWER SUPPLY STABILIZATION
512
BLINK LEDs AT STARTUP
514
IS SAFETY ON, OR IS TRIGGER PULLED ?
YES
516
NO
IS NO. OF FLASHES AT MAX. ?
YES
518
NO
Z
ENTER "BEGIN" ROUTINE
520
540
IS MODE "RESTRICTIVE" ?
YES
NO
522
IS TRIGGER PULLED ?
YES
Y
NO
542
ENTER "RESTRICTIVE FIRE" ROUTINE
R
IS TRIGGER PULLED ?
NO
S
544
YES
GO TO "STOP 1"
546
X
524
IS SAFETY ACTUATED ?
NO
YES
W

Fig. 35A

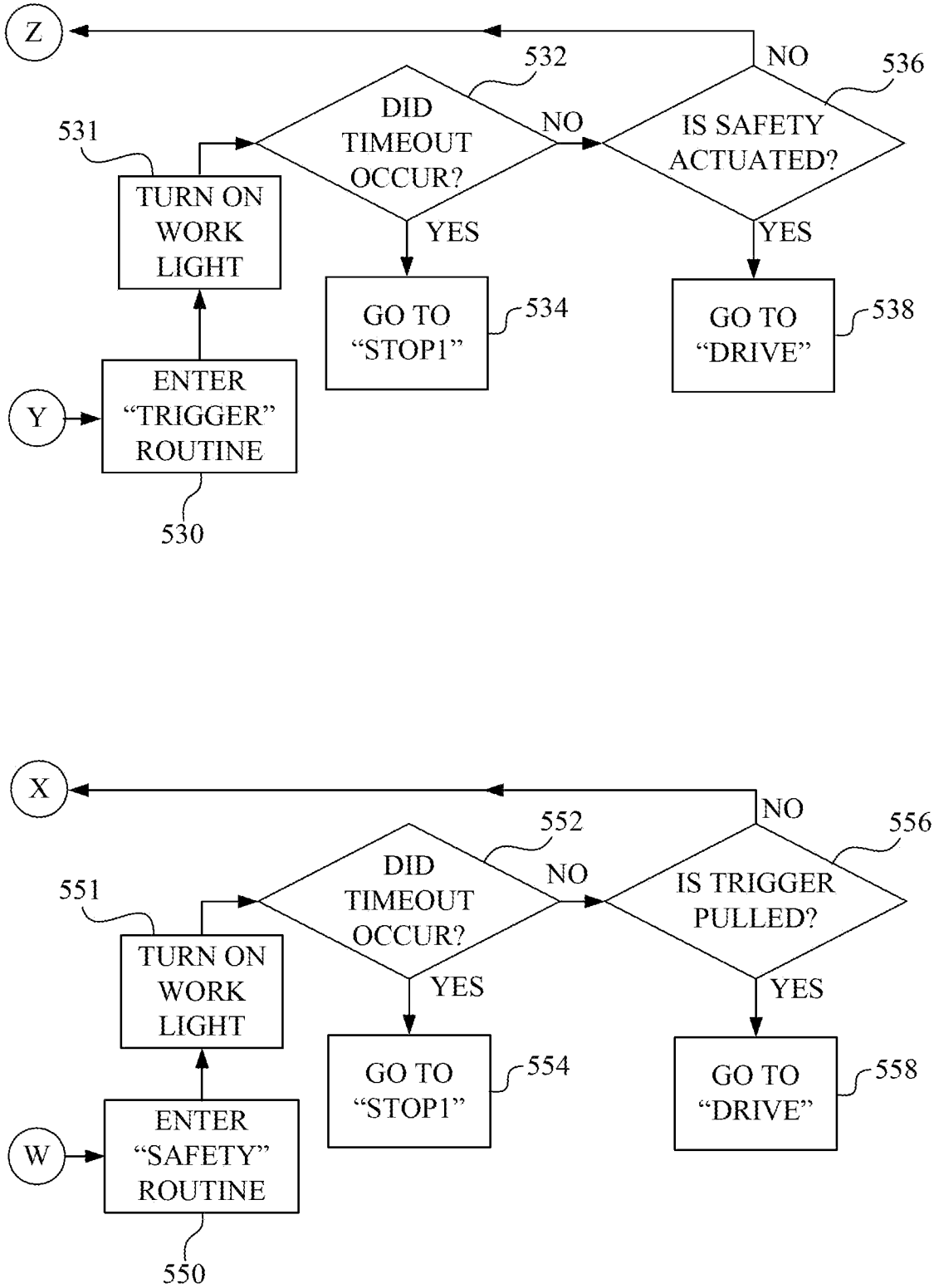
Z
NO
532
536
DID TIMEOUT OCCUR?
NO
IS SAFETY ACTUATED?
531
TURN ON WORK LIGHT
YES
YES
GO TO "STOP1"
534
GO TO "DRIVE"
538
ENTER "TRIGGER" ROUTINE
Y
530
X
NO
552
556
DID TIMEOUT OCCUR?
NO
IS TRIGGER PULLED?
551
TURN ON WORK LIGHT
YES
YES
GO TO "STOP1"
554
GO TO "DRIVE"
558
ENTER "SAFETY" ROUTINE
W
550

Fig. 35B

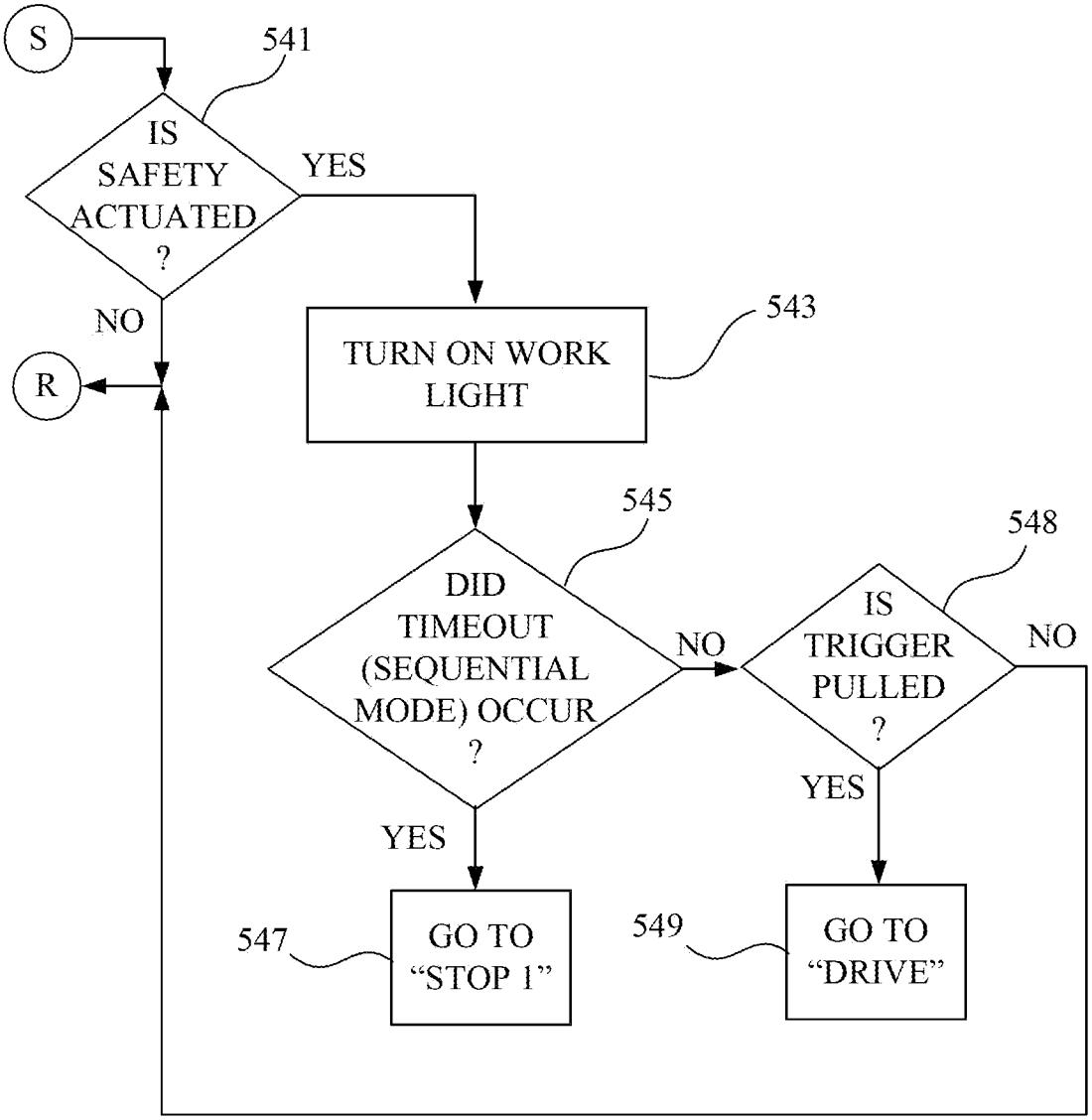
S
541
IS SAFETY ACTUATED ?
YES
NO
R
TURN ON WORK LIGHT
543
545
DID TIMEOUT (SEQUENTIAL MODE) OCCUR ?
NO
548
IS TRIGGER PULLED ?
NO
YES
YES
547
GO TO "STOP 1"
549
GO TO "DRIVE"

Fig. 35C

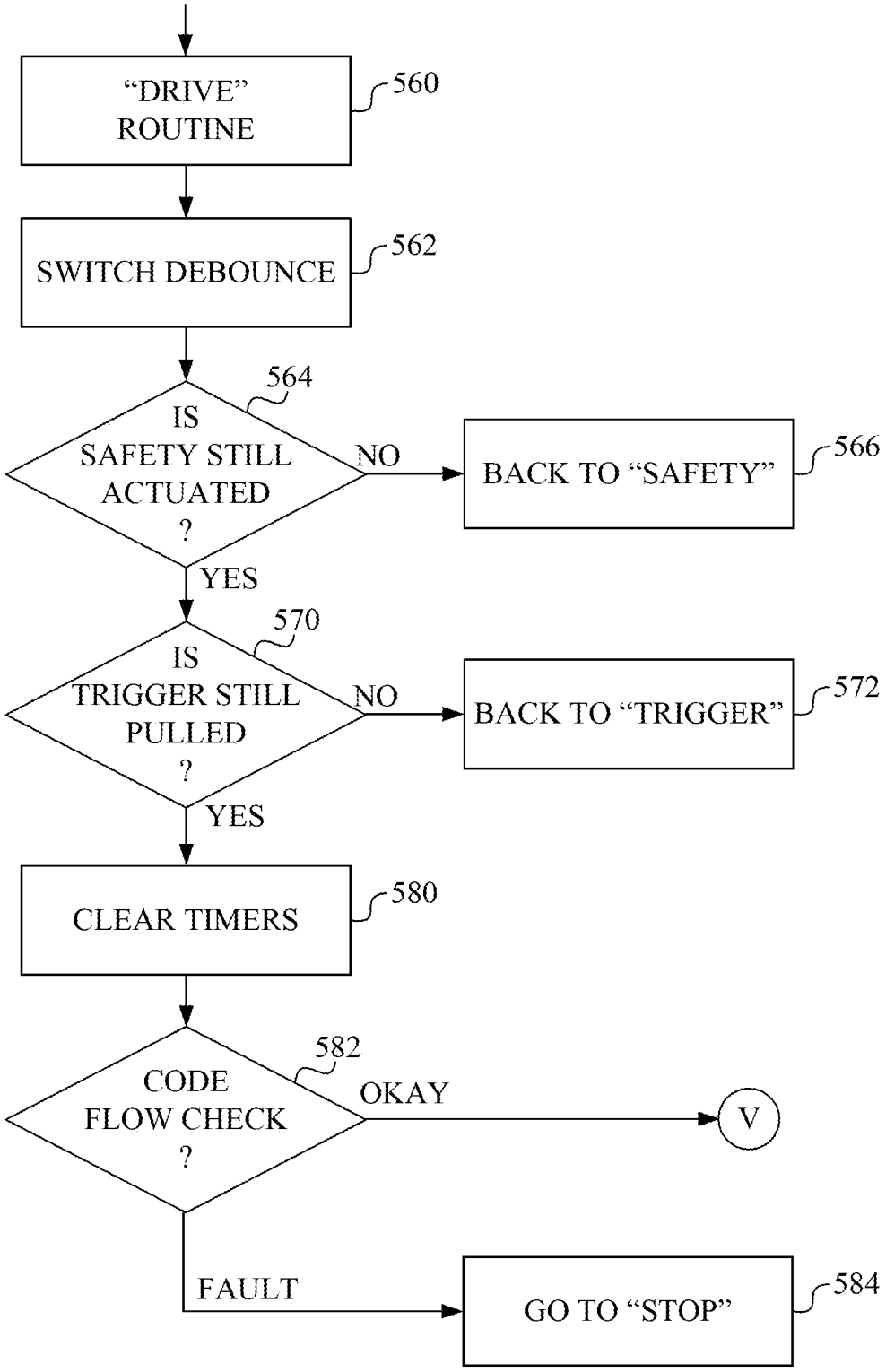
"DRIVE" ROUTINE
560
SWITCH DEBOUNCE
562
564
IS SAFETY STILL ACTUATED ?
NO
BACK TO "SAFETY"
566
YES
570
IS TRIGGER STILL PULLED ?
NO
BACK TO "TRIGGER"
572
YES
CLEAR TIMERS
580
582
CODE FLOW CHECK ?
OKAY
V
FAULT
GO TO "STOP"
584

Fig. 36A

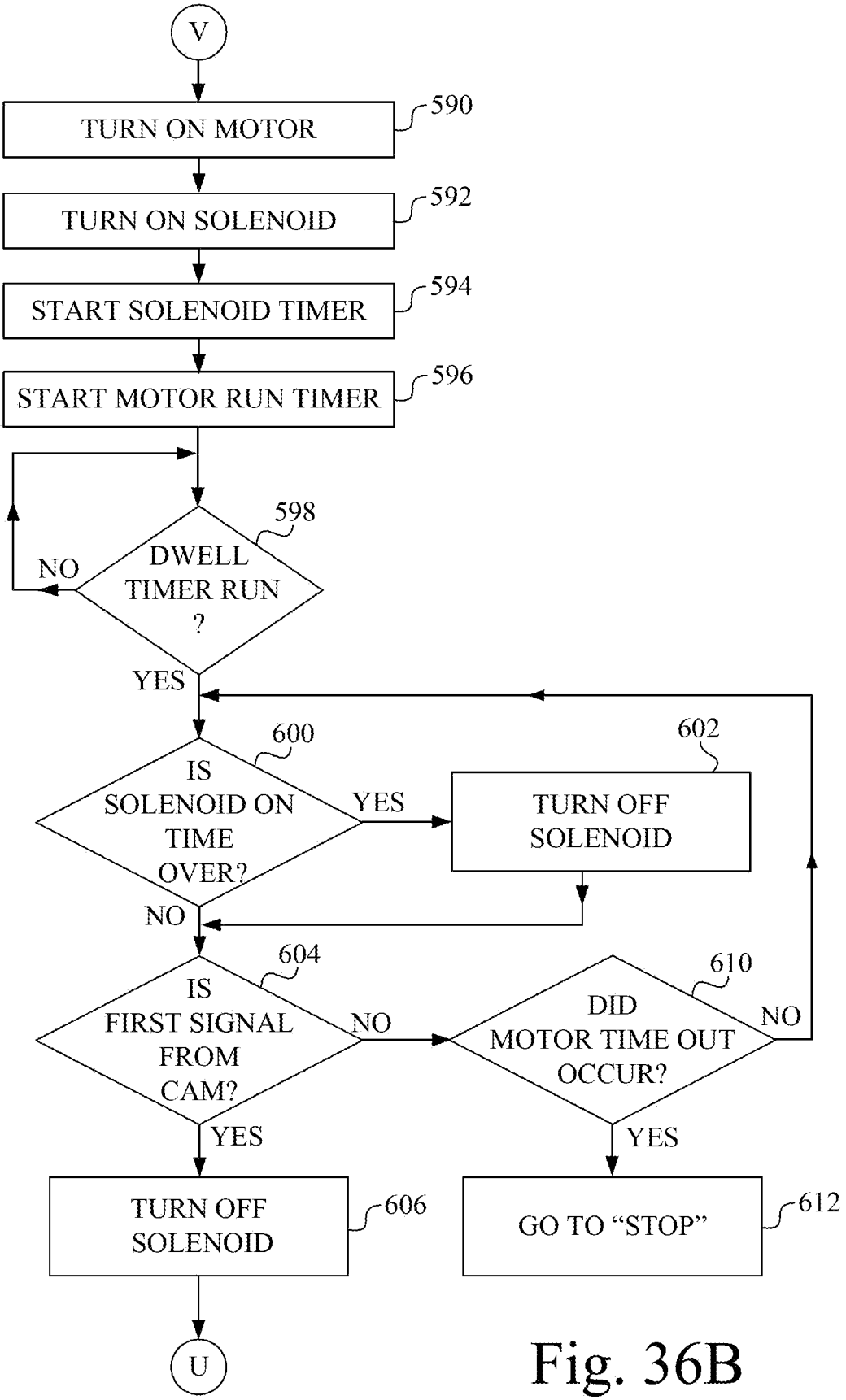
V
TURN ON MOTOR
590
TURN ON SOLENOID
592
START SOLENOID TIMER
594
START MOTOR RUN TIMER
596
598
DWELL TIMER RUN ?
NO
YES
600
IS SOLENOID ON TIME OVER?
YES
602
TURN OFF SOLENOID
NO
604
IS FIRST SIGNAL FROM CAM?
NO
610
DID MOTOR TIME OUT OCCUR?
NO
YES
YES
TURN OFF SOLENOID
606
GO TO "STOP"
612
U

Fig. 36B

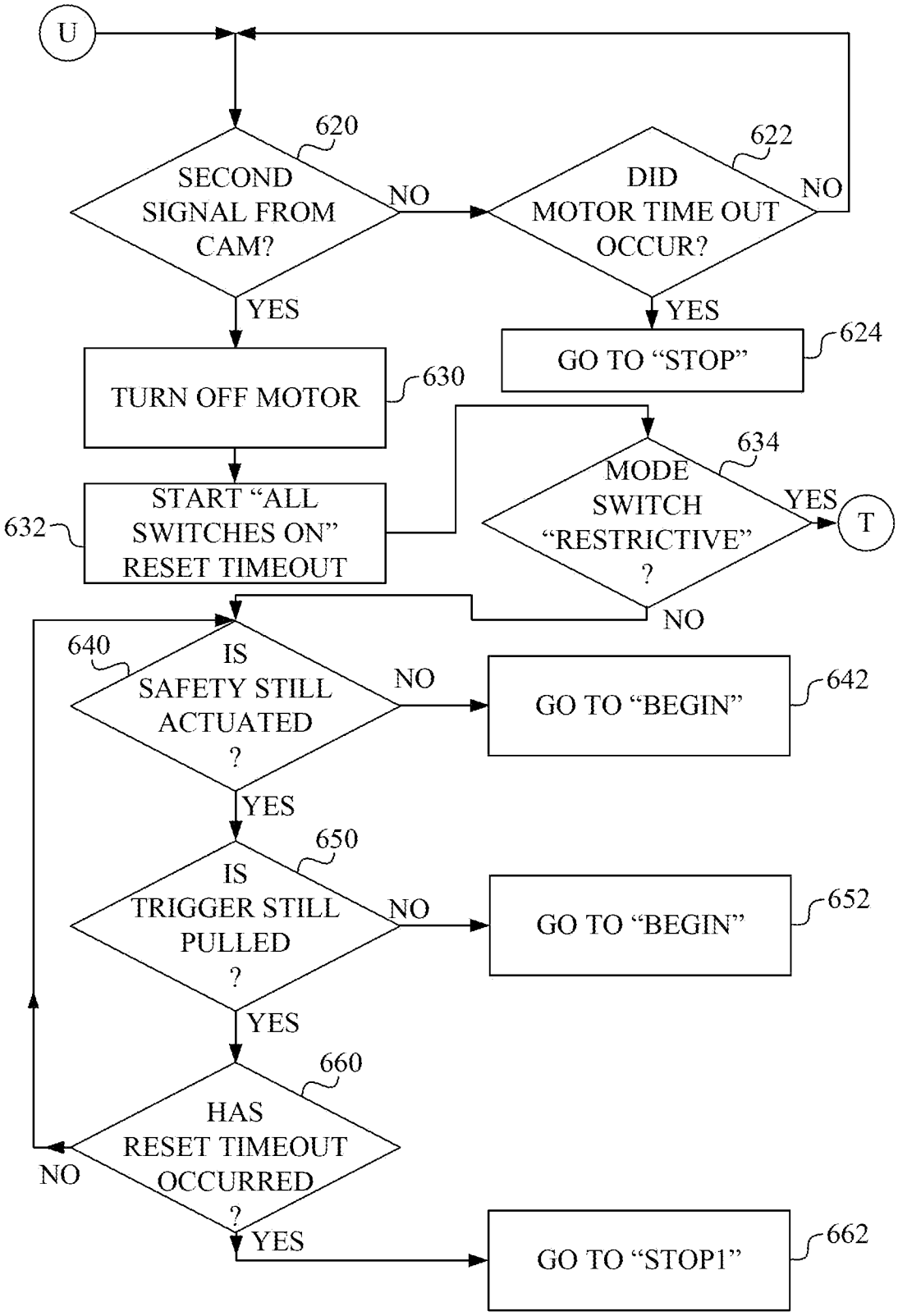
U
620
SECOND SIGNAL FROM CAM?
NO
622
DID MOTOR TIME OUT OCCUR?
NO
YES
YES
624
GO TO "STOP"
TURN OFF MOTOR
630
634
MODE SWITCH "RESTRICTIVE" ?
YES
T
632
START "ALL SWITCHES ON" RESET TIMEOUT
NO
640
IS SAFETY STILL ACTUATED ?
NO
642
GO TO "BEGIN"
YES
650
IS TRIGGER STILL PULLED ?
NO
652
GO TO "BEGIN"
YES
660
HAS RESET TIMEOUT OCCURRED ?
NO
YES
662
GO TO "STOP1"

Fig. 36C

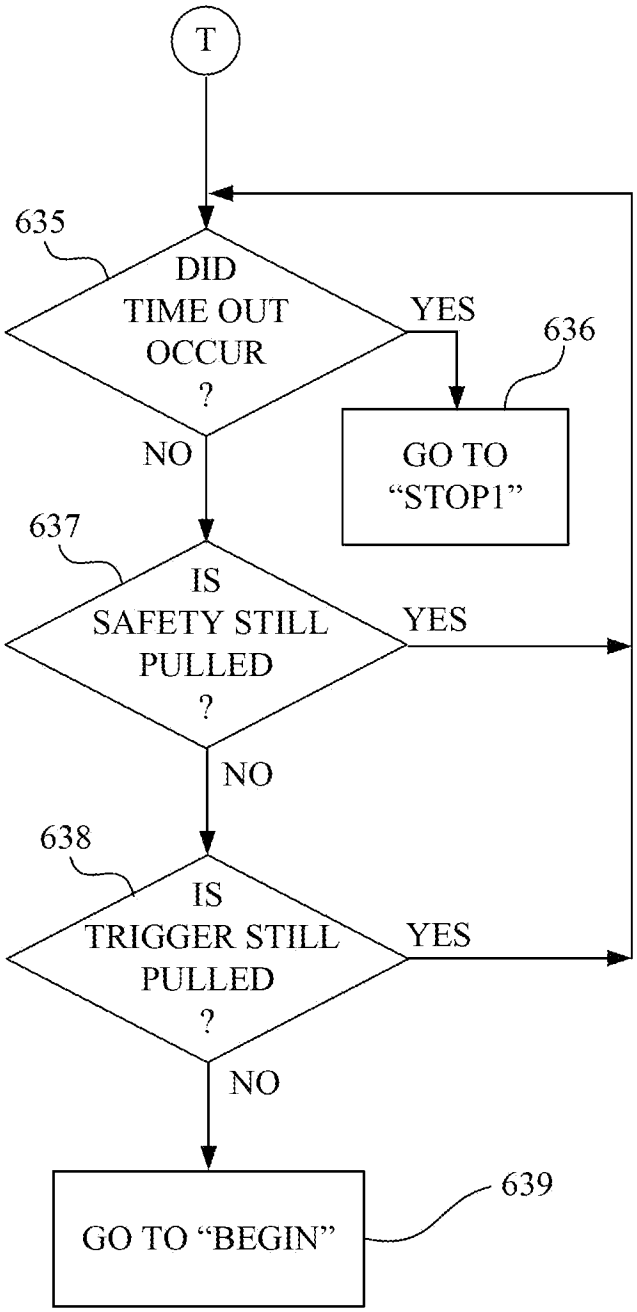
T
635
DID TIME OUT OCCUR ?
YES
636
GO TO "STOP1"
NO
637
IS SAFETY STILL PULLED ?
YES
NO
638
IS TRIGGER STILL PULLED ?
YES
NO
GO TO "BEGIN"
639

Fig. 36D

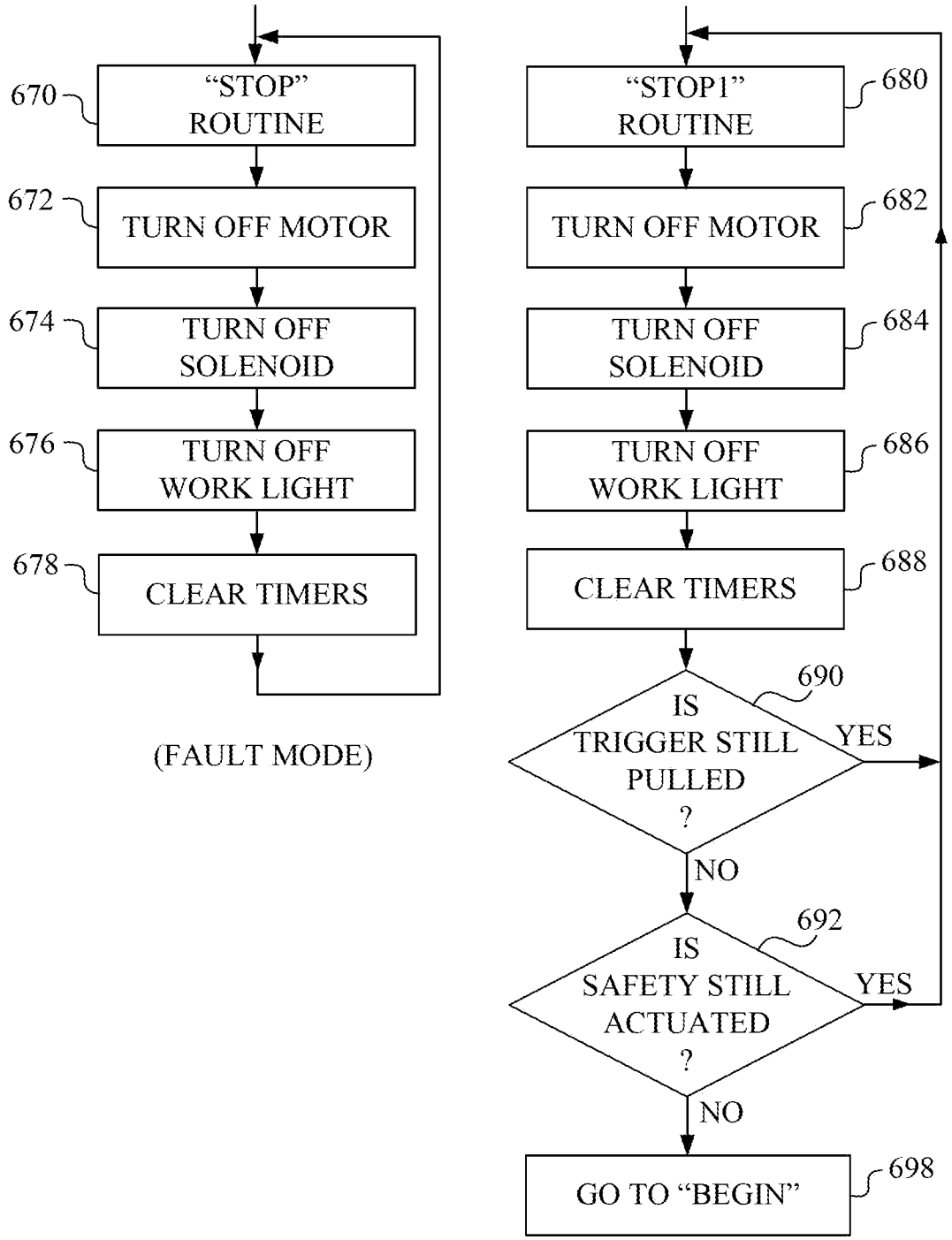
670
"STOP" ROUTINE
672
TURN OFF MOTOR
674
TURN OFF SOLENOID
676
TURN OFF WORK LIGHT
678
CLEAR TIMERS
(FAULT MODE)
"STOP1" ROUTINE
680
TURN OFF MOTOR
682
TURN OFF SOLENOID
684
TURN OFF WORK LIGHT
686
CLEAR TIMERS
688
IS TRIGGER STILL PULLED ?
690
YES
NO
IS SAFETY STILL ACTUATED ?
692
YES
NO
GO TO "BEGIN"
698

Fig. 37

PTO/AIA/14 (02-18)
Approved for use through 11/30/2020. OMB 0651-0032
U.S. Patent and Trademark Office; U.S. DEPARTMENT OF COMMERCE
Under the Paperwork Reduction Act of 1995, no persons are required to respond to a collection of information unless it contains a valid OMB control number.

Application Data Sheet 37 CFR 1.76	Attorney Docket Number	SEN0523.US10
	Application Number	
Title of Invention	FASTENER DRIVING TOOL USING A GAS SPRING	

The application data sheet is part of the provisional or nonprovisional application for which it is being submitted. The following form contains the bibliographic data arranged in a format specified by the United States Patent and Trademark Office as outlined in 37 CFR 1.76.
This document may be completed electronically and submitted to the Office in electronic format using the Electronic Filing System (EFS) or the document may be printed and included in a paper filed application.

Secrecy Order 37 CFR 5.2:

☐ Portions or all of the application associated with this Application Data Sheet may fall under a Secrecy Order pursuant to 37 CFR 5.2 (Paper filers only. Applications that fall under Secrecy Order may not be filed electronically.)

Inventor Information:

Inventor 1 Remove

Legal Name

Prefix	Given Name	Middle Name	Family Name	Suffix
	Richard	L.	Leimbach	

Residence Information (Select One) ● US Residency Non US Residency Active US Military Service

City	Cincinnati	State/Province	OH	Country of Residence i	US

Mailing Address of Inventor:

Address 1	2901 Markbreit Avenue
Address 2	
City	Cincinnati
State/Province	OH
Postal Code	45209
Country i	US

Inventor 2 Remove

Legal Name

Prefix	Given Name	Middle Name	Family Name	Suffix
	Thomas	A.	McCardle	

Residence Information (Select One) ◉ US Residency Non US Residency Active US Military Service

City	Cincinnati	State/Province	OH	Country of Residence i	US

Mailing Address of Inventor:

Address 1	525 Riddle Road
Address 2	
City	Cincinnati
State/Province	OH
Postal Code	45215
Country i	US

Inventor 3 Remove

Legal Name

Prefix	Given Name	Middle Name	Family Name	Suffix
	Danny	L.	Bolender	

Residence Information (Select One) ◉ US Residency Non US Residency Active US Military Service

Under the Paperwork Reduction Act of 1995, no persons are required to respond to a collection of information unless it contains a valid OMB control number.

Application Data Sheet 37 CFR 1.76	Attorney Docket Number	SEN0523.US10
	Application Number	
Title of Invention	FASTENER DRIVING TOOL USING A GAS SPRING	

City	Sardinia	State/Province	OH	Country of Residence i	US

Mailing Address of Inventor:

Address 1	13225 Wardlow Road		
Address 2			
City	Sardinia	State/Province	OH
Postal Code	45171	Country i	US

Inventor 4 Remove

Legal Name

Prefix	Given Name	Middle Name	Family Name	Suffix
	Steve		Dickinson	

Residence Information (Select One) ◉ US Residency Non US Residency Active US Military Service

City	Cincinnati	State/Province	OH	Country of Residence i	US

Mailing Address of Inventor:

Address 1	4064 Lenox Drive		
Address 2			
City	Cincinnati	State/Province	OH
Postal Code	45245	Country i	US

Inventor 5 Remove

Legal Name

Prefix	Given Name	Middle Name	Family Name	Suffix
	Joseph	R.	Knueven	

Residence Information (Select One) ◉ US Residency Non US Residency Active US Military Service

City	Cincinnati	State/Province	OH	Country of Residence i	US

Mailing Address of Inventor:

Address 1	7286 Rita Lane		
Address 2			
City	Cincinnati	State/Province	OH
Postal Code	45243	Country i	US

Inventor 6 Remove

Legal Name

Prefix	Given Name	Middle Name	Family Name	Suffix
	Robert	L.	Lance	Jr.

Residence Information (Select One) ◉ US Residency Non US Residency Active US Military Service

City	Midland	State/Province	OH	Country of Residence i	US

Koki Holdings America Ltd.
Ex. 1002, p. 259

Under the Paperwork Reduction Act of 1995, no persons are required to respond to a collection of information unless it contains a valid OMB control number.

Application Data Sheet 37 CFR 1.76	Attorney Docket Number	SEN0523.US10
	Application Number	
Title of Invention	FASTENER DRIVING TOOL USING A GAS SPRING	

Mailing Address of Inventor:

Address 1	14461 U.S. 68		
Address 2			
City	Midland	**State/Province**	OH
Postal Code	45148	**Country** i	US

Inventor 7 Remove

Legal Name

Prefix	Given Name	Middle Name	Family Name	Suffix
	Dan		Stoltz	

Residence Information (Select One) ◉ US Residency Non US Residency Active US Military Service

City	Sardinia	**State/Province**	OH	**Country of Residence** i	US

Mailing Address of Inventor:

Address 1	12978 Prudy Road		
Address 2			
City	Sardinia	**State/Province**	OH
Postal Code	45171	**Country** i	US

Inventor 8 Remove

Legal Name

Prefix	Given Name	Middle Name	Family Name	Suffix
	Michael	V.	Petrocelli	

Residence Information (Select One) ◉ US Residency Non US Residency Active US Military Service

City	Bethel	**State/Province**	OH	**Country of Residence** i	US

Mailing Address of Inventor:

Address 1	3114 State Route 133		
Address 2			
City	Bethel	**State/Province**	OH
Postal Code	45106	**Country** i	US

All Inventors Must Be Listed - Additional Inventor Information blocks may be generated within this form by selecting the **Add** button. Add

Correspondence Information:

Enter either Customer Number or complete the Correspondence Information section below.
For further information see 37 CFR 1.33(a).

☐ **An Address is being provided for the correspondence Information of this application.**

Customer Number	40628

Koki Holdings America Ltd.
Ex. 1002, p. 260

Under the Paperwork Reduction Act of 1995, no persons are required to respond to a collection of information unless it contains a valid OMB control number.

Application Data Sheet 37 CFR 1.76	Attorney Docket Number	SEN0523.US10
	Application Number	
Title of Invention	FASTENER DRIVING TOOL USING A GAS SPRING	

Email Address	patents@gribbelllaw.com	Add Email	Remove Email

Application Information:

Title of the Invention	FASTENER DRIVING TOOL USING A GAS SPRING		
Attorney Docket Number	SEN0523.US10	**Small Entity Status Claimed**	☐
Application Type	Nonprovisional		
Subject Matter	Utility		
Total Number of Drawing Sheets (if any)	45	**Suggested Figure for Publication (if any)**	16

Filing By Reference:

Only complete this section when filing an application by reference under 35 U.S.C. 111(c) and 37 CFR 1.57(a). Do not complete this section if application papers including a specification and any drawings are being filed. Any domestic benefit or foreign priority information must be provided in the appropriate section(s) below (i.e., "Domestic Benefit/National Stage Information" and "Foreign Priority Information").

For the purposes of a filing date under 37 CFR 1.53(b), the description and any drawings of the present application are replaced by this reference to the previously filed application, subject to conditions and requirements of 37 CFR 1.57(a).

Application number of the previously filed application	Filing date (YYYY-MM-DD)	Intellectual Property Authority or Country

Publication Information:

☐ Request Early Publication (Fee required at time of Request 37 CFR 1.219)

☐ **Request Not to Publish.** I hereby request that the attached application not be published under 35 U.S.C. 122(b) and certify that the invention disclosed in the attached application **has not and will not** be the subject of an application filed in another country, or under a multilateral international agreement, that requires publication at eighteen months after filing.

Representative Information:

Representative information should be provided for all practitioners having a power of attorney in the application. Providing this information in the Application Data Sheet does not constitute a power of attorney in the application (see 37 CFR 1.32).
Either enter Customer Number or complete the Representative Name section below. If both sections are completed the customer Number will be used for the Representative Information during processing.

Please Select One:	● Customer Number	US Patent Practitioner	○ Limited Recognition (37 CFR 11.9)
Customer Number	40628		

Under the Paperwork Reduction Act of 1995, no persons are required to respond to a collection of information unless it contains a valid OMB control number.

Application Data Sheet 37 CFR 1.76	Attorney Docket Number	SEN0523.US10
	Application Number	
Title of Invention	FASTENER DRIVING TOOL USING A GAS SPRING	

Domestic Benefit/National Stage Information:

This section allows for the applicant to either claim benefit under 35 U.S.C. 119(e), 120, 121, 365(c), or 386(c) or indicate National Stage entry from a PCT application. Providing benefit claim information in the Application Data Sheet constitutes the specific reference required by 35 U.S.C. 119(e) or 120, and 37 CFR 1.78.
When referring to the current application, please leave the "Application Number" field blank.

Prior Application Status	Pending		Remove
Application Number	Continuity Type	Prior Application Number	Filing or 371(c) Date (YYYY-MM-DD)
	Continuation of	16398944	2019-04-30

Prior Application Status	Patented				Remove
Application Number	Continuity Type	Prior Application Number	Filing Date (YYYY-MM-DD)	Patent Number	Issue Date (YYYY-MM-DD)
16398944	Continuation of	15583202	2017-05-01	10478954	2019-11-19

Prior Application Status	Patented				Remove
Application Number	Continuity Type	Prior Application Number	Filing Date (YYYY-MM-DD)	Patent Number	Issue Date (YYYY-MM-DD)
15583202	Continuation of	14077313	2013-11-12	9676088	2017-06-13

Prior Application Status	Patented				Remove
Application Number	Continuity Type	Prior Application Number	Filing Date (YYYY-MM-DD)	Patent Number	Issue Date (YYYY-MM-DD)
14077313	Division of	13770481	2013-02-19	8602282	2013-12-10

Prior Application Status	Patented				Remove
Application Number	Continuity Type	Prior Application Number	Filing Date (YYYY-MM-DD)	Patent Number	Issue Date (YYYY-MM-DD)
13770481	Continuation of	12913049	2010-10-27	8387718	2013-03-05

Prior Application Status	Patented				Remove
Application Number	Continuity Type	Prior Application Number	Filing Date (YYYY-MM-DD)	Patent Number	Issue Date (YYYY-MM-DD)
12913049	Division of	12243693	2008-10-01	8011441	2011-09-06

Prior Application Status	Expired		Remove
Application Number	Continuity Type	Prior Application Number	Filing or 371(c) Date (YYYY-MM-DD)
12243693	Claims benefit of provisional	60977678	2007-10-05

Additional Domestic Benefit/National Stage Data may be generated within this form by selecting the **Add** button. Add

Foreign Priority Information:

Under the Paperwork Reduction Act of 1995, no persons are required to respond to a collection of information unless it contains a valid OMB control number.

Application Data Sheet 37 CFR 1.76	Attorney Docket Number	SEN0523.US10
	Application Number	
Title of Invention	FASTENER DRIVING TOOL USING A GAS SPRING	

This section allows for the applicant to claim priority to a foreign application. Providing this information in the application data sheet constitutes the claim for priority as required by 35 U.S.C. 119(b) and 37 CFR 1.55. When priority is claimed to a foreign application that is eligible for retrieval under the priority document exchange program (PDX)[i] the information will be used by the Office to automatically attempt retrieval pursuant to 37 CFR 1.55(i)(1) and (2). Under the PDX program, applicant bears the ultimate responsibility for ensuring that a copy of the foreign application is received by the Office from the participating foreign intellectual property office, or a certified copy of the foreign priority application is filed, within the time period specified in 37 CFR 1.55(g)(1).

Remove

Application Number	Country[i]	Filing Date (YYYY-MM-DD)	Access Code[i] (if applicable)

Additional Foreign Priority Data may be generated within this form by selecting the **Add** button. Add

Statement under 37 CFR 1.55 or 1.78 for AIA (First Inventor to File) Transition Applications

☐ This application (1) claims priority to or the benefit of an application filed before March 16, 2013 and (2) also contains, or contained at any time, a claim to a claimed invention that has an effective filing date on or after March 16, 2013.
NOTE: By providing this statement under 37 CFR 1.55 or 1.78, this application, with a filing date on or after March 16, 2013, will be examined under the first inventor to file provisions of the AIA.

Application Data Sheet 37 CFR 1.76	Attorney Docket Number	SEN0523.US10
	Application Number	
Title of Invention	FASTENER DRIVING TOOL USING A GAS SPRING	

Authorization or Opt-Out of Authorization to Permit Access:

When this Application Data Sheet is properly signed and filed with the application, applicant has provided written authority to permit a participating foreign intellectual property (IP) office access to the instant application-as-filed (see paragraph A in subsection 1 below) and the European Patent Office (EPO) access to any search results from the instant application (see paragraph B in subsection 1 below).

Should applicant choose not to provide an authorization identified in subsection 1 below, applicant **must opt-out** of the authorization by checking the corresponding box A or B or both in subsection 2 below.

NOTE: This section of the Application Data Sheet is **ONLY** reviewed and processed with the **INITIAL** filing of an application. After the initial filing of an application, an Application Data Sheet cannot be used to provide or rescind authorization for access by a foreign IP office(s). Instead, Form PTO/SB/39 or PTO/SB/69 must be used as appropriate.

1. Authorization to Permit Access by a Foreign Intellectual Property Office(s)

A. Priority Document Exchange (PDX) - Unless box A in subsection 2 (opt-out of authorization) is checked, the undersigned hereby **grants the USPTO authority** to provide the European Patent Office (EPO), the Japan Patent Office (JPO), the Korean Intellectual Property Office (KIPO), the State Intellectual Property Office of the People's Republic of China (SIPO), the World Intellectual Property Organization (WIPO), and any other foreign intellectual property office participating with the USPTO in a bilateral or multilateral priority document exchange agreement in which a foreign application claiming priority to the instant patent application is filed, access to: (1) the instant patent application-as-filed and its related bibliographic data, (2) any foreign or domestic application to which priority or benefit is claimed by the instant application and its related bibliographic data, and (3) the date of filing of this Authorization. See 37 CFR 1.14(h)(1).

B. Search Results from U.S. Application to EPO - Unless box B in subsection 2 (opt-out of authorization) is checked, the undersigned hereby **grants the USPTO authority** to provide the EPO access to the bibliographic data and search results from the instant patent application when a European patent application claiming priority to the instant patent application is filed. See 37 CFR 1.14(h)(2).

The applicant is reminded that the EPO's Rule 141(1) EPC (European Patent Convention) requires applicants to submit a copy of search results from the instant application without delay in a European patent application that claims priority to the instant application.

2. Opt-Out of Authorizations to Permit Access by a Foreign Intellectual Property Office(s)

☐ A. Applicant **DOES NOT** authorize the USPTO to permit a participating foreign IP office access to the instant application-as-filed. If this box is checked, the USPTO will not be providing a participating foreign IP office with any documents and information identified in subsection 1A above.

☐ B. Applicant **DOES NOT** authorize the USPTO to transmit to the EPO any search results from the instant patent application. If this box is checked, the USPTO will not be providing the EPO with search results from the instant application.

NOTE: Once the application has published or is otherwise publicly available, the USPTO may provide access to the application in accordance with 37 CFR 1.14.

Under the Paperwork Reduction Act of 1995, no persons are required to respond to a collection of information unless it contains a valid OMB control number.

Application Data Sheet 37 CFR 1.76	Attorney Docket Number	SEN0523.US10
	Application Number	
Title of Invention	FASTENER DRIVING TOOL USING A GAS SPRING	

Applicant Information:

Providing assignment information in this section does not substitute for compliance with any requirement of part 3 of Title 37 of CFR to have an assignment recorded by the Office.

Applicant 1 Remove

If the applicant is the inventor (or the remaining joint inventor or inventors under 37 CFR 1.45), this section should not be completed. The information to be provided in this section is the name and address of the legal representative who is the applicant under 37 CFR 1.43; or the name and address of the assignee, person to whom the inventor is under an obligation to assign the invention, or person who otherwise shows sufficient proprietary interest in the matter who is the applicant under 37 CFR 1.46. If the applicant is an applicant under 37 CFR 1.46 (assignee, person to whom the inventor is obligated to assign, or person who otherwise shows sufficient proprietary interest) together with one or more joint inventors, then the joint inventor or inventors who are also the applicant should be identified in this section. Clear

● Assignee	Legal Representative under 35 U.S.C. 117	Joint Inventor
Person to whom the inventor is obligated to assign.	Person who shows sufficient proprietary interest	

If applicant is the legal representative, indicate the authority to file the patent application, the inventor is:

Name of the Deceased or Legally Incapacitated Inventor:

If the Applicant is an Organization check here. ☒

Organization Name	Kyocera Senco Industrial Tools, Inc.		
Mailing Address Information For Applicant:			
Address 1	4270 Ivy Pointe Boulevard		
Address 2			
City	Cincinnati	**State/Province**	OH
Country	US	Postal Code	45245
Phone Number	513-388-2000	Fax Number	
Email Address			

Additional Applicant Data may be generated within this form by selecting the Add button. Add

Assignee Information including Non-Applicant Assignee Information:

Providing assignment information in this section does not substitute for compliance with any requirement of part 3 of Title 37 of CFR to have an assignment recorded by the Office.

Under the Paperwork Reduction Act of 1995, no persons are required to respond to a collection of information unless it contains a valid OMB control number.

Application Data Sheet 37 CFR 1.76	Attorney Docket Number	SEN0523.US10
	Application Number	
Title of Invention	FASTENER DRIVING TOOL USING A GAS SPRING	

Assignee 1

Complete this section if assignee information, including non-applicant assignee information, is desired to be included on the patent application publication. An assignee-applicant identified in the "Applicant Information" section will appear on the patent application publication as an applicant. For an assignee-applicant, complete this section only if identification as an assignee is also desired on the patent application publication.

Remove

If the Assignee or Non-Applicant Assignee is an Organization check here. ☒

Organization Name	Kyocera Senco Industrial Tools, Inc.

Mailing Address Information For Assignee including Non-Applicant Assignee:

Address 1	4270 Ivy Pointe Boulevard		
Address 2			
City	Cincinnati	**State/Province**	OH
Country i	US	Postal Code	45245
Phone Number	513-388-2000	Fax Number	
Email Address			

Additional Assignee or Non-Applicant Assignee Data may be generated within this form by selecting the Add button. Add

Signature:

Remove

NOTE: This Application Data Sheet must be signed in accordance with 37 CFR 1.33(b). **However, if this Application Data Sheet is submitted with the INITIAL filing of the application and either box A or B is not checked in subsection 2 of the "Authorization or Opt-Out of Authorization to Permit Access" section, then this form must also be signed in accordance with 37 CFR 1.14(c).**

This Application Data Sheet **must** be signed by a patent practitioner if one or more of the applicants is a **juristic entity** (e.g., corporation or association). If the applicant is two or more joint inventors, this form must be signed by a patent practitioner, **all** joint inventors who are the applicant, or one or more joint inventor-applicants who have been given power of attorney (e.g., see USPTO Form PTO/AIA/81) on behalf of **all** joint inventor-applicants.

See 37 CFR 1.4(d) for the manner of making signatures and certifications.

Signature	/Russell Gribbell/			Date (YYYY-MM-DD)	2022-01-10
First Name	Russell	Last Name	Gribbell	Registration Number	77316

Additional Signature may be generated within this form by selecting the Add button. Add

Under the Paperwork Reduction Act of 1995, no persons are required to respond to a collection of information unless it contains a valid OMB control number.

Application Data Sheet 37 CFR 1.76	Attorney Docket Number	SEN0523.US10
	Application Number	
Title of Invention	FASTENER DRIVING TOOL USING A GAS SPRING	

This collection of information is required by 37 CFR 1.76. The information is required to obtain or retain a benefit by the public which is to file (and by the USPTO to process) an application. Confidentiality is governed by 35 U.S.C. 122 and 37 CFR 1.14. This collection is estimated to take 23 minutes to complete, including gathering, preparing, and submitting the completed application data sheet form to the USPTO. Time will vary depending upon the individual case. Any comments on the amount of time you require to complete this form and/or suggestions for reducing this burden, should be sent to the Chief Information Officer, U.S. Patent and Trademark Office, U.S. Department of Commerce, P.O. Box 1450, Alexandria, VA 22313-1450. DO NOT SEND FEES OR COMPLETED FORMS TO THIS ADDRESS. **SEND TO: Commissioner for Patents, P.O. Box 1450, Alexandria, VA 22313-1450.**

Privacy Act Statement

The Privacy Act of 1974 (P.L. 93-579) requires that you be given certain information in connection with your submission of the attached form related to a patent application or patent. Accordingly, pursuant to the requirements of the Act, please be advised that: (1) the general authority for the collection of this information is 35 U.S.C. 2(b)(2); (2) furnishing of the information solicited is voluntary; and (3) the principal purpose for which the information is used by the U.S. Patent and Trademark Office is to process and/or examine your submission related to a patent application or patent. If you do not furnish the requested information, the U.S. Patent and Trademark Office may not be able to process and/or examine your submission, which may result in termination of proceedings or abandonment of the application or expiration of the patent.

The information provided by you in this form will be subject to the following routine uses:

1 The information on this form will be treated confidentially to the extent allowed under the Freedom of Information Act (5 U.S.C. 552) and the Privacy Act (5 U.S.C. 552a). Records from this system of records may be disclosed to the Department of Justice to determine whether the Freedom of Information Act requires disclosure of these records.

2. A record from this system of records may be disclosed, as a routine use, in the course of presenting evidence to a court, magistrate, or administrative tribunal, including disclosures to opposing counsel in the course of settlement negotiations.

3 A record in this system of records may be disclosed, as a routine use, to a Member of Congress submitting a request involving an individual, to whom the record pertains, when the individual has requested assistance from the Member with respect to the subject matter of the record.

4. A record in this system of records may be disclosed, as a routine use, to a contractor of the Agency having need for the information in order to perform a contract. Recipients of information shall be required to comply with the requirements of the Privacy Act of 1974, as amended, pursuant to 5 U.S.C. 552a(m).

5. A record related to an International Application filed under the Patent Cooperation Treaty in this system of records may be disclosed, as a routine use, to the International Bureau of the World Intellectual Property Organization, pursuant to the Patent CooperationTreaty.

6. A record in this system of records may be disclosed, as a routine use, to another federal agency for purposes of National Security review (35 U.S.C. 181) and for review pursuant to the Atomic Energy Act (42 U.S.C. 218(c)).

7. A record from this system of records may be disclosed, as a routine use, to the Administrator, General Services, or his/her designee, during an inspection of records conducted by GSA as part of that agency's responsibility to recommend improvements in records management practices and programs, under authority of 44 U.S.C. 2904 and 2906. Such disclosure shall be made in accordance with the GSA regulations governing inspection of records for this purpose, and any other relevant (i.e., GSA or Commerce) directive. Such disclosure shall not be used to make determinations about individuals.

8. A record from this system of records may be disclosed, as a routine use, to the public after either publication of the application pursuant to 35 U.S.C. 122(b) or issuance of a patent pursuant to 35 U.S.C. 151. Further, a record may be disclosed, subject to the limitations of 37 CFR 1.14, as a routine use, to the public if the record was filed in an application which became abandoned or in which the proceedings were terminated and which application is referenced by either a published application, an application open to public inspections or an issued patent.

9. A record from this system of records may be disclosed, as a routine use, to a Federal, State, or local law enforcement agency, if the USPTO becomes aware of a violation or potential violation of law or regulation.

Koki Holdings America Ltd.
Ex. 1002, p. 268

PTO/AIA/80 (07-17)
Approved for use through 01/31/2018. OMB 0651-0035
U.S. Patent and Trademark Office; U.S. DEPARTMENT OF COMMERCE
Under the Paperwork Reduction Act of 1995, no person is required to respond to a collection of information unless it displays a valid OMB control number

POWER OF ATTORNEY TO PROSECUTE APPLICATIONS BEFORE THE USPTO

I hereby revoke all previous powers of attorney given in the application identified in the attached statement under 37 CFR 3.73(c).

I hereby appoint:

[X] Practitioners associated with Customer Number: 40628

OR

[ ] Practitioner(s) named below (if more than ten patent practitioners are to be named, then a customer number must be used):

Name	Registration Number	Name	Registration Number

As attorney(s) or agent(s) to represent the undersigned before the United States Patent and Trademark Office (USPTO) in connection with any and all patent applications assigned only to the undersigned according to the USPTO assignment records or assignment documents attached to this form in accordance with 37 CFR 3.73(c).

Please change the correspondence address for the application identified in the attached statement under 37 CFR 3.73(c) to:

[X] The address associated with Customer Number: 40628

OR

[ ]

Firm or individual name		
Address		
City	State	Zip
Country		
Telephone	Email	

Assignee name and address: Kyocera Senco Industrial Tools, Inc.
4270 Ivy Pointe Blvd.
Cincinnati, Ohio 45245

A copy of this form, together with a statement under 37 CFR 3.73(c) (Form PTO/AIA/96 or equivalent) is required to be filed in each application in which this form is used. The statement under 37 CFR 3.73(c) may be completed by one of the practitioners appointed in this form, and must identify the application in which this Power of Attorney is to be filed.

SIGNATURE of Assignee of Record

The individual whose signature and title is supplied below is authorized to act on behalf of the assignee.

Signature	Date April 19, 2018
Name Clifford C. Mentrup	Telephone 513-388-2523
Title Vice President, Legal, Risk and HR	

This collection of information is required by 37 CFR 1.31, 1.32, and 1.33. The information is required to obtain or retain a benefit by the public, which is to update (and by the USPTO to process) the file of a patent or reexamination proceeding. Confidentiality is governed by 35 U.S.C. 122 and 37 CFR 1.11 and 1.14. This collection is estimated to take 18 minutes to complete, including gathering, preparing, and submitting the completed application form to the USPTO. Time will vary depending upon the individual case. Any comments on the amount of time you require to complete this form and/or suggestions for reducing this burden, should be sent to the Chief Information Officer, U.S. Patent and Trademark Office, U.S. Department of Commerce, P.O. Box 1450, Alexandria, VA 22313-1450. DO NOT SEND FEES OR COMPLETED FORMS TO THIS ADDRESS. SEND TO: Commissioner for Patents, P.O. Box 1450, Alexandria, VA 22313-1450.
If you need assistance in completing the form, call 1-800-PTO-9199 and select option 2.

PTO/AIA/96 (08-12)
Approved for use through 01/31/2013. OMB 0651-0031
U.S. Patent and Trademark Office; U.S. DEPARTMENT OF COMMERCE
Under the Paperwork Reduction Act of 1995, no persons are required to respond to a collection of information unless it displays a valid OMB control number.

STATEMENT UNDER 37 CFR 3.73(c)

Applicant/Patent Owner: Richard L. Leimbach, et al.

Application No./Patent No.: _____ Filed/Issue Date: _____

Titled: FASTENER DRIVING TOOL USING A GAS SPRING

Kyocera Senco Industrial Tools, Inc., a Corporation

(Name of Assignee) (Type of Assignee, e.g., corporation, partnership, university, government agency, etc.)

states that, for the patent application/patent identified above, it is (choose **one** of options 1, 2, 3 or 4 below):

1. ☑ The assignee of the entire right, title, and interest.

2. ☐ An assignee of less than the entire right, title, and interest (check applicable box):

☐ The extent (by percentage) of its ownership interest is _____%. Additional Statement(s) by the owners holding the balance of the interest must be submitted to account for 100% of the ownership interest.

☐ There are unspecified percentages of ownership. The other parties, including inventors, who together own the entire right, title and interest are:

Additional Statement(s) by the owner(s) holding the balance of the interest must be submitted to account for the entire right, title, and interest.

3. ☐ The assignee of an undivided interest in the entirety (a complete assignment from one of the joint inventors was made). The other parties, including inventors, who together own the entire right, title, and interest are:

Additional Statement(s) by the owner(s) holding the balance of the interest must be submitted to account for the entire right, title, and interest.

4. ☐ The recipient, via a court proceeding or the like (*e.g.*, bankruptcy, probate), of an undivided interest in the entirety (a complete transfer of ownership interest was made). The certified document(s) showing the transfer is attached.

The interest identified in option 1, 2 or 3 above (not option 4) is evidenced by either (choose **one** of options A or B below):

A. ☐ An assignment from the inventor(s) of the patent application/patent identified above. The assignment was recorded in the United States Patent and Trademark Office at Reel _____, Frame _____, or for which a copy thereof is attached.

B. ☑ A chain of title from the inventor(s), of the patent application/patent identified above, to the current assignee as follows:

1. From: the inventors of the parent case 12/243,693 To: Senco Products, Inc.

The document was recorded in the United States Patent and Trademark Office at Reel 021619, Frame 0753, or for which a copy thereof is attached.

2. From: Senco Products, Inc. To: Senco Brands, Inc.

The document was recorded in the United States Patent and Trademark Office at Reel 025301, Frame 0204, or for which a copy thereof is attached.

This collection of information is required by 37 CFR 3.73(b). The information is required to obtain or retain a benefit by the public which is to file (and by the USPTO to process) an application. Confidentiality is governed by 35 U.S.C. 122 and 37 CFR 1.11 and 1.14. This collection is estimated to take 12 minutes to complete, including gathering, preparing, and submitting the completed application form to the USPTO. Time will vary depending upon the individual case. Any comments on the amount of time you require to complete this form and/or suggestions for reducing this burden, should be sent to the Chief Information Officer, U.S. Patent and Trademark Office, U.S. Department of Commerce, P.O. Box 1450, Alexandria, VA 22313-1450. DO NOT SEND FEES OR COMPLETED FORMS TO THIS ADDRESS. **SEND TO: Commissioner for Patents, P.O. Box 1450, Alexandria, VA 22313-1450.**

If you need assistance in completing the form, call 1-800-PTO-9199 and select option 2.

Under the Paperwork Reduction Act of 1995, no persons are required to respond to a collection of information unless it displays a valid OMB control number.

STATEMENT UNDER 37 CFR 3.73(c)

3. From: Senco Brands, Inc. To: Kyocera Senco Brands, Inc.

The document was recorded in the United States Patent and Trademark Office at
Reel 048467, Frame 0077, or for which a copy thereof is attached.

4. From: Kyocera Senco Brands, Inc. To: Kyocera Senco Industrial Tools, Inc.

The document was recorded in the United States Patent and Trademark Office at
Reel 048467, Frame 0478, or for which a copy thereof is attached.

5. From: _____ To: _____

The document was recorded in the United States Patent and Trademark Office at
Reel _____, Frame _____, or for which a copy thereof is attached.

6. From: _____ To: _____

The document was recorded in the United States Patent and Trademark Office at
Reel _____, Frame _____, or for which a copy thereof is attached.

☐ Additional documents in the chain of title are listed on a supplemental sheet(s).

☑ As required by 37 CFR 3.73(c)(1)(i), the documentary evidence of the chain of title from the original owner to the assignee was, or concurrently is being, submitted for recordation pursuant to 37 CFR 3.11.

[NOTE: A separate copy (i.e., a true copy of the original assignment document(s)) must be submitted to Assignment Division in accordance with 37 CFR Part 3, to record the assignment in the records of the USPTO. See MPEP 302.08]

The undersigned (whose title is supplied below) is authorized to act on behalf of the assignee.

/Russell Gribbell/	January 10, 2022
Signature	Date
Russell F. Gribbell	77316
Printed or Typed Name	Title or Registration Number

Privacy Act Statement

The **Privacy Act of 1974 (P.L. 93-579)** requires that you be given certain information in connection with your submission of the attached form related to a patent application or patent. Accordingly, pursuant to the requirements of the Act, please be advised that: (1) the general authority for the collection of this information is 35 U.S.C. 2(b)(2); (2) furnishing of the information solicited is voluntary; and (3) the principal purpose for which the information is used by the U.S. Patent and Trademark Office is to process and/or examine your submission related to a patent application or patent. If you do not furnish the requested information, the U.S. Patent and Trademark Office may not be able to process and/or examine your submission, which may result in termination of proceedings or abandonment of the application or expiration of the patent.

The information provided by you in this form will be subject to the following routine uses:

1. The information on this form will be treated confidentially to the extent allowed under the Freedom of Information Act (5 U.S.C. 552) and the Privacy Act (5 U.S.C 552a). Records from this system of records may be disclosed to the Department of Justice to determine whether disclosure of these records is required by the Freedom of Information Act.
2. A record from this system of records may be disclosed, as a routine use, in the course of presenting evidence to a court, magistrate, or administrative tribunal, including disclosures to opposing counsel in the course of settlement negotiations.
3. A record in this system of records may be disclosed, as a routine use, to a Member of Congress submitting a request involving an individual, to whom the record pertains, when the individual has requested assistance from the Member with respect to the subject matter of the record.
4. A record in this system of records may be disclosed, as a routine use, to a contractor of the Agency having need for the information in order to perform a contract. Recipients of information shall be required to comply with the requirements of the Privacy Act of 1974, as amended, pursuant to 5 U.S.C. 552a(m).
5. A record related to an International Application filed under the Patent Cooperation Treaty in this system of records may be disclosed, as a routine use, to the International Bureau of the World Intellectual Property Organization, pursuant to the Patent Cooperation Treaty.
6. A record in this system of records may be disclosed, as a routine use, to another federal agency for purposes of National Security review (35 U.S.C. 181) and for review pursuant to the Atomic Energy Act (42 U.S.C. 218(c)).
7. A record from this system of records may be disclosed, as a routine use, to the Administrator, General Services, or his/her designee, during an inspection of records conducted by GSA as part of that agency's responsibility to recommend improvements in records management practices and programs, under authority of 44 U.S.C. 2904 and 2906. Such disclosure shall be made in accordance with the GSA regulations governing inspection of records for this purpose, and any other relevant (*i.e.*, GSA or Commerce) directive. Such disclosure shall not be used to make determinations about individuals.
8. A record from this system of records may be disclosed, as a routine use, to the public after either publication of the application pursuant to 35 U.S.C. 122(b) or issuance of a patent pursuant to 35 U.S.C. 151. Further, a record may be disclosed, subject to the limitations of 37 CFR 1.14, as a routine use, to the public if the record was filed in an application which became abandoned or in which the proceedings were terminated and which application is referenced by either a published application, an application open to public inspection or an issued patent.
9. A record from this system of records may be disclosed, as a routine use, to a Federal, State, or local law enforcement agency, if the USPTO becomes aware of a violation or potential violation of law or regulation.

UNITED STATES PATENT AND TRADEMARK OFFICE

UNITED STATES DEPARTMENT OF COMMERCE
United States Patent and Trademark Office
Address: COMMISSIONER FOR PATENTS
P.O. Box 1450
Alexandria, Virginia 22313-1450
www.uspto.gov

APPLICATION NUMBER	FILING or 371(c) DATE	GRP ART UNIT	FIL FEE REC'D	ATTY.DOCKET.NO	TOT CLAIMS	IND CLAIMS
17/571,811	01/10/2022	3731	1820	SEN0523.US10	14	3

CONFIRMATION NO. 1007

FILING RECEIPT

OC000000131240093

40628
Frederick H. Gribbell, LLC
5515 Timber Way Drive
Cincinnati, OH 45238

Date Mailed: 01/20/2022

Receipt is acknowledged of this non-provisional utility patent application. The application will be taken up for examination in due course. Applicant will be notified as to the results of the examination. Any correspondence concerning the application must include the following identification information: the U.S. APPLICATION NUMBER, FILING DATE, NAME OF FIRST INVENTOR, and TITLE OF INVENTION. Fees transmitted by check or draft are subject to collection.

Please verify the accuracy of the data presented on this receipt. If an error is noted on this Filing Receipt, please submit a written request for a corrected Filing Receipt, including a properly marked-up ADS showing the changes with strike-through for deletions and underlining for additions. If you received a "Notice to File Missing Parts" or other Notice requiring a response for this application, please submit any request for correction to this Filing Receipt with your reply to the Notice. When the USPTO processes the reply to the Notice, the USPTO will generate another Filing Receipt incorporating the requested corrections provided that the request is grantable.

Inventor(s)

Richard L. Leimbach, Cincinnati, OH;
Thomas A. McCardle, Cincinnati, OH;
Danny L. Bolender, Sardinia, OH;
Steve Dickinson, Cincinnati, OH;
Joseph R. Knueven, Cincinnati, OH;
Robert L. Lance JR., Midland, OH;
Dan Stoltz, Sardinia, OH;
Michael V. Petrocelli, Bethel, OH;

Applicant(s)

Kyocera Senco Industrial Tools, Inc., Cincinnati, OH;

Assignment For Published Patent Application

Kyocera Senco Industrial Tools, Inc., Cincinnati, OH

Power of Attorney: The patent practitioners associated with Customer Number 40628

Domestic Priority data as claimed by applicant

This application is a CON of 16/398,944 04/30/2019 PAT 11241776
which is a CON of 15/583,202 05/01/2017 PAT 10478954
which is a CON of 14/077,313 11/12/2013 PAT 9676088
which is a DIV of 13/770,481 02/19/2013 PAT 8602282
which is a CON of 12/913,049 10/27/2010 PAT 8387718
which is a DIV of 12/243,693 10/01/2008 PAT 8011441
which claims benefit of 60/977,678 10/05/2007

Foreign Applications for which priority is claimed (You may be eligible to benefit from the **Patent Prosecution Highway** program at the USPTO. Please see http://www.uspto.gov for more information.) - None.
Foreign application information must be provided in an Application Data Sheet in order to constitute a claim to foreign priority. See 37 CFR 1.55 and 1.76.

Permission to Access Application via Priority Document Exchange: Yes

Permission to Access Search Results: Yes

Applicant may provide or rescind an authorization for access using Form PTO/SB/39 or Form PTO/SB/69 as appropriate.

If Required, Foreign Filing License Granted: 01/20/2022

The country code and number of your priority application, to be used for filing abroad under the Paris Convention, is **US 17/571,811**

Projected Publication Date: 04/28/2022

Non-Publication Request: No

Early Publication Request: No
Title

FASTENER DRIVING TOOL USING A GAS SPRING

Preliminary Class

227

Statement under 37 CFR 1.55 or 1.78 for AIA (First Inventor to File) Transition Applications: No

PROTECTING YOUR INVENTION OUTSIDE THE UNITED STATES

Since the rights granted by a U.S. patent extend only throughout the territory of the United States and have no effect in a foreign country, an inventor who wishes patent protection in another country must apply for a patent in a specific country or in regional patent offices. Applicants may wish to consider the filing of an international application under the Patent Cooperation Treaty (PCT). An international (PCT) application generally has the same effect as a regular national patent application in each PCT-member country. The PCT process **simplifies** the filing of patent applications on the same invention in member countries, but **does not result** in a grant of "an international patent" and does not eliminate the need of applicants to file additional documents and fees in countries where patent protection is desired.

Almost every country has its own patent law, and a person desiring a patent in a particular country must make an application for patent in that country in accordance with its particular laws. Since the laws of many countries differ in various respects from the patent law of the United States, applicants are advised to seek guidance from specific foreign countries to ensure that patent rights are not lost prematurely.

Applicants also are advised that in the case of inventions made in the United States, the Director of the USPTO must issue a license before applicants can apply for a patent in a foreign country. The filing of a U.S. patent application serves as a request for a foreign filing license. The application's filing receipt contains further information and guidance as to the status of applicant's license for foreign filing.

Applicants may wish to consult the USPTO booklet, "General Information Concerning Patents" (specifically, the section entitled "Treaties and Foreign Patents") for more information on timeframes and deadlines for filing foreign patent applications. The guide is available either by contacting the USPTO Contact Center at 800-786-9199, or it can be viewed on the USPTO website at http://www.uspto.gov/web/offices/pac/doc/general/index.html.

For information on preventing theft of your intellectual property (patents, trademarks and copyrights), you may wish to consult the U.S. Government website, http://www.stopfakes.gov. Part of a Department of Commerce initiative, this website includes self-help "toolkits" giving innovators guidance on how to protect intellectual property in specific countries such as China, Korea and Mexico. For questions regarding patent enforcement issues, applicants may call the U.S. Government hotline at 1-866-999-HALT (1-866-999-4258).

LICENSE FOR FOREIGN FILING UNDER

Title 35, United States Code, Section 184

Title 37, Code of Federal Regulations, 5.11 & 5.15

GRANTED

The applicant has been granted a license under 35 U.S.C. 184, if the phrase "IF REQUIRED, FOREIGN FILING LICENSE GRANTED" followed by a date appears on this form. Such licenses are issued in all applications where the conditions for issuance of a license have been met, regardless of whether or not a license may be required as set forth in 37 CFR 5.15. The scope and limitations of this license are set forth in 37 CFR 5.15(a) unless an earlier license has been issued under 37 CFR 5.15(b). The license is subject to revocation upon written notification. The date indicated is the effective date of the license, unless an earlier license of similar scope has been granted under 37 CFR 5.13 or 5.14.

This license is to be retained by the licensee and may be used at any time on or after the effective date thereof unless it is revoked. This license is automatically transferred to any related applications(s) filed under 37 CFR 1.53(d). This license is not retroactive.

The grant of a license does not in any way lessen the responsibility of a licensee for the security of the subject matter as imposed by any Government contract or the provisions of existing laws relating to espionage and the national security or the export of technical data. Licensees should apprise themselves of current regulations especially with respect to certain countries, of other agencies, particularly the Office of Defense Trade Controls, Department of State (with respect to Arms, Munitions and Implements of War (22 CFR 121-128)); the Bureau of Industry and Security, Department of Commerce (15 CFR parts 730-774); the Office of Foreign AssetsControl, Department of Treasury (31 CFR Parts 500+) and the Department of Energy.

NOT GRANTED

No license under 35 U.S.C. 184 has been granted at this time, if the phrase "IF REQUIRED, FOREIGN FILING LICENSE GRANTED" DOES NOT appear on this form. Applicant may still petition for a license under 37 CFR 5.12, if a license is desired before the expiration of 6 months from the filing date of the application. If 6 months has lapsed from the filing date of this application and the licensee has not received any indication of a secrecy order under 35 U.S.C. 181, the licensee may foreign file the application pursuant to 37 CFR 5.15(b).

SelectUSA

The United States represents the largest, most dynamic marketplace in the world and is an unparalleled location for business investment, innovation, and commercialization of new technologies. The U.S. offers tremendous resources and advantages for those who invest and manufacture goods here. Through SelectUSA, our nation works to promote and facilitate business investment. SelectUSA provides information assistance to the international investor community; serves as an ombudsman for existing and potential investors; advocates on behalf of U.S. cities, states, and regions competing for global investment; and counsels U.S. economic development organizations on investment attraction best practices. To learn more about why the United States is the best country in the world to develop technology, manufacture products, deliver services, and grow your business, visit http://www.SelectUSA.gov or call +1-202-482-6800.

PATENT APPLICATION FEE DETERMINATION RECORD

Substitute for Form PTO-875

Application or Docket Number
17/571,811

APPLICATION AS FILED - PART I

FOR	(Column 1) NUMBER FILED	(Column 2) NUMBER EXTRA	SMALL ENTITY RATE($)	SMALL ENTITY FEE($)	OR	OTHER THAN SMALL ENTITY RATE($)	OTHER THAN SMALL ENTITY FEE($)
BASIC FEE (37 CFR 1.16(a), (b), or (c))	N/A	N/A	N/A			N/A	320
SEARCH FEE (37 CFR 1.16(k), (i), or (m))	N/A	N/A	N/A			N/A	700
EXAMINATION FEE (37 CFR 1.16(o), (p), or (q))	N/A	N/A	N/A			N/A	800
TOTAL CLAIMS (37 CFR 1.16(i))	14 minus 20 =	*			OR	x 100 =	0.00
INDEPENDENT CLAIMS (37 CFR 1.16(h))	3 minus 3 =	*				x 480 =	0.00
APPLICATION SIZE FEE (37 CFR 1.16(s))	If the specification and drawings exceed 100 sheets of paper, the application size fee due is $310 ($155 for small entity) for each additional 50 sheets or fraction thereof. See 35 U.S.C. 41(a)(1)(G) and 37 CFR 1.16(s).						0.00
MULTIPLE DEPENDENT CLAIM PRESENT (37 CFR 1.16(j))							0.00
* If the difference in column 1 is less than zero, enter "0" in column 2.			TOTAL			TOTAL	1820

APPLICATION AS AMENDED - PART II

		(Column 1) CLAIMS REMAINING AFTER AMENDMENT		(Column 2) HIGHEST NUMBER PREVIOUSLY PAID FOR	(Column 3) PRESENT EXTRA	SMALL ENTITY RATE($)	SMALL ENTITY ADDITIONAL FEE($)	OR	OTHER THAN SMALL ENTITY RATE($)	OTHER THAN SMALL ENTITY ADDITIONAL FEE($)
AMENDMENT A	Total (37 CFR 1.16(i))	*	Minus	**	=	x =		OR	x =	
AMENDMENT A	Independent (37 CFR 1.16(h))	*	Minus	***	=	x =		OR	x =	
AMENDMENT A	Application Size Fee (37 CFR 1.16(s))									
AMENDMENT A	FIRST PRESENTATION OF MULTIPLE DEPENDENT CLAIM (37 CFR 1.16(j))							OR		
						TOTAL ADD'L FEE		OR	TOTAL ADD'L FEE	

		(Column 1) CLAIMS REMAINING AFTER AMENDMENT		(Column 2) HIGHEST NUMBER PREVIOUSLY PAID FOR	(Column 3) PRESENT EXTRA	SMALL ENTITY RATE($)	SMALL ENTITY ADDITIONAL FEE($)	OR	OTHER THAN SMALL ENTITY RATE($)	OTHER THAN SMALL ENTITY ADDITIONAL FEE($)
AMENDMENT B	Total (37 CFR 1.16(i))	*	Minus	**	=	x =		OR	x =	
AMENDMENT B	Independent (37 CFR 1.16(h))	*	Minus	***	=	x =		OR	x =	
AMENDMENT B	Application Size Fee (37 CFR 1.16(s))									
AMENDMENT B	FIRST PRESENTATION OF MULTIPLE DEPENDENT CLAIM (37 CFR 1.16(j))							OR		
						TOTAL ADD'L FEE		OR	TOTAL ADD'L FEE	

* If the entry in column 1 is less than the entry in column 2, write "0" in column 3.
** If the "Highest Number Previously Paid For" IN THIS SPACE is less than 20, enter "20".
*** If the "Highest Number Previously Paid For" IN THIS SPACE is less than 3, enter "3".
The "Highest Number Previously Paid For" (Total or Independent) is the highest found in the appropriate box in column 1.

UNITED STATES PATENT AND TRADEMARK OFFICE

UNITED STATES DEPARTMENT OF COMMERCE
United States Patent and Trademark Office
Address: COMMISSIONER FOR PATENTS
P.O. Box 1450
Alexandria, Virginia 22313-1450
www.uspto.gov

APPLICATION NUMBER	FILING OR 371(C) DATE	FIRST NAMED APPLICANT	ATTY. DOCKET NO./TITLE
17/571,811	01/10/2022	Richard L. Leimbach	SEN0523.US10

CONFIRMATION NO. 1007

PUBLICATION NOTICE

OC000000133482940

40628
Frederick H. Gribbell, LLC
5515 Timber Way Drive
Cincinnati, OH 45238

Title:FASTENER DRIVING TOOL USING A GAS SPRING

Publication No.US-2022-0126433-A1
Publication Date:04/28/2022

NOTICE OF PUBLICATION OF APPLICATION

The above-identified application will be electronically published as a patent application publication pursuant to 37 CFR 1.211, et seq. The patent application publication number and publication date are set forth above.

The publication may be accessed through the USPTO's publically available Searchable Databases via the Internet at www.uspto.gov. The direct link to access the publication is currently http://www.uspto.gov/patft/.

The publication process established by the Office does not provide for mailing a copy of the publication to applicant. A copy of the publication may be obtained from the Office upon payment of the appropriate fee set forth in 37 CFR 1.19(a)(1). Orders for copies of patent application publications are handled by the USPTO's Public Records Division. The Public Records Division can be reached by telephone at (571) 272-3150 or (800) 972-6382, by facsimile at (571) 273-3250, by mail addressed to the United States Patent and Trademark Office, Public Records Division, Alexandria, VA 22313-1450 or via the Internet.

In addition, information on the status of the application, including the mailing date of Office actions and the dates of receipt of correspondence filed in the Office, may also be accessed via the Internet through the Patent Electronic Business Center at www.uspto.gov using the public side of the Patent Application Information and Retrieval (PAIR) system. The direct link to access this status information is currently https://portal.uspto.gov/pair/PublicPair. Prior to publication, such status information is confidential and may only be obtained by applicant using the private side of PAIR.

Further assistance in electronically accessing the publication, or about PAIR, is available by calling the Patent Electronic Business Center at 1-866-217-9197.

Office of Data Managment, Application Assistance Unit (571) 272-4000, or (571) 272-4200, or 1-888-786-0101

Notice of References Cited	Application/Control No. 17/571,811	Applicant(s)/Patent Under Reexamination Leimbach et al.	
	Examiner MICHELLE LOPEZ	Art Unit 3731	Page 1 of 1

U.S. PATENT DOCUMENTS

*		Document Number Country Code-Number-Kind Code	Date MM-YYYY	Name	CPC Classification	US Classification
*	A	US-4215808-A	08-1980	Sollberger; Roger W.	B25C1/041	227/132
*	B	US-2933290-A	04-1960	RYDER JR HAROLD E	E21B7/021	173/148
*	C	US-5720423-A	02-1998	Kondo; Masayoshi	B25C1/06	227/132
	D					
	E					
	F					
	G					
	H					
	I					
	J					
	K					
	L					
	M					

FOREIGN PATENT DOCUMENTS

*		Document Number Country Code-Number-Kind Code	Date MM-YYYY	Country	Name	CPC Classification
	N					
	O					
	P					
	Q					
	R					
	S					
	T					

NON-PATENT DOCUMENTS

*		Include as applicable: Author, Title Date, Publisher, Edition or Volume, Pertinent Pages)
	U	
	V	
	W	
	X	

*A copy of this reference is not being furnished with this Office action. (See MPEP § 707.05(a).)
Dates in MM-YYYY format are publication dates. Classifications may be US or foreign.

Koki Holdings America Ltd.
Ex. 1002, p. 279

Search Notes	Application/Control No.	Applicant(s)/Patent Under Reexamination
	17/571,811	Leimbach et al.
	Examiner	**Art Unit**
	MICHELLE LOPEZ	3731

CPC - Searched*		
Symbol	**Date**	**Examiner**
B25C1/047 OR B25C1/041 OR B25C1/06 OR B25C5/13 OR B25C1/04		

CPC Combination Sets - Searched*		
Symbol	**Date**	**Examiner**

US Classification - Searched*			
Class	**Subclass**	**Date**	**Examiner**
227	8,130	02/20/2023	ml

* See search history printout included with this form or the SEARCH NOTES box below to determine the scope of the search.

Search Notes		
Search Notes	**Date**	**Examiner**
Inventors name search; IDs review; text search combined with CPC	02/20/2023	ml

Interference Search			
US Class/CPC Symbol	**US Subclass/CPC Group**	**Date**	**Examiner**

/MICHELLE LOPEZ/ Primary Examiner, Art Unit 3731	

Koki Holdings America Ltd.
Ex. 1002, p. 280

PE2E SEARCH - Search History (Prior Art)

Ref #	Hits	Search Query	DBs	Default Operator	Plurals	British Equivalents	Time Stamp
L20	10214	(B25C1/047 OR B25C1/041 OR B25C1/06 OR B25C5/13 OR B25C1/04).CPC.	(US-PGPUB; USPAT; USOCR; FIT (WO); FPRS; EPO; JPO; DERWENT; IBM_TDB)	OR	ON	ON	2023/02/20 02:22 PM
L21	1286	L20 AND piston AND cylinder AND air AND spring	(US-PGPUB; USPAT; USOCR; FIT (WO); FPRS; EPO; JPO; DERWENT; IBM_TDB)	OR	ON	ON	2023/02/20 02:22 PM
L23	678	((("LEIMBACH") near3 ("Richard")) OR (("MCCARDLE") near3 ("Thomas")) OR (("BOLENDER") near3 ("Danny")) OR (("DICKINSON") near3 ("Steve")) OR (("KNUEVEN") near3 ("Joseph")) OR (("LANCE") near3 ("Robert")) OR (("STOLTZ") near3 ("Dan")) OR (("PETROCELLI") near3 ("Michael"))).INV.	(US-PGPUB; USPAT; USOCR; EPO; JPO; DERWENT)	OR	ON	ON	2023/02/20 03:25 PM

PE2E SEARCH - Search History (Interference)

There are no Interference searches to show.

Koki Holdings America Ltd.
Ex. 1002, p. 281

PTO/SB/08a (07-09)
Approved for use through 11/30/2020. OMB 0651-0031
U.S. Patent and Trademark Office; U.S. DEPARTMENT OF COMMERCE
Under the Paperwork Reduction Act of 1995, no persons are required to respond to a collection of information unless it contains a valid OMB control number.

Substitute for form 1449/PTO

INFORMATION DISCLOSURE STATEMENT BY APPLICANT

(Use as many sheets as necessary)

Sheet 1 of 1

Complete if Known	
Application Number	
Filing Date	
First Named Inventor	Richard L. Leimbach
Art Unit	
Examiner Name	
Attorney Docket Number	SEN0523.US10

U. S. PATENT DOCUMENTS

Examiner Initials*	Cite No.[1]	Document Number Number-Kind Code[2] (if known)	Publication Date MM-DD-YYYY	Name of Patentee or Applicant of Cited Document	Pages, Columns, Lines, Where Relevant Passages or Relevant Figures Appear
		US- 860536	07-16-1907	Ellingham	
		US- 6669072	12-30-2003	Burke	FIGS. 6-7
		US-			
		US-			
		US-			
		US-			
		US-			
		US-			
		US-			
		US-			
		US-			
		US-			
		US-			
		US-			
		US-			
		US-			
		US-			
		US-			

FOREIGN PATENT DOCUMENTS

Examiner Initials*	Cite No.[1]	Foreign Patent Document Country Code[3]-Number[4]-Kind Code[5] (if known)	Publication Date MM-DD-YYYY	Name of Patentee or Applicant of Cited Document	Pages, Columns, Lines, Where Relevant Passages Or Relevant Figures Appear	T[6]

Examiner Signature	/MICHELLE LOPEZ/	Date Considered	02/20/2023

*EXAMINER: Initial if reference considered, whether or not citation is in conformance with MPEP 609. Draw line through citation if not in conformance and not considered. Include copy of this form with next communication to applicant. [1] Applicant's unique citation designation number (optional). [2] See Kinds Codes of USPTO Patent Documents at www.uspto.gov or MPEP 901.04. [3] Enter Office that issued the document, by the two-letter code (WIPO Standard ST.3). [4] For Japanese patent documents, the indication of the year of the reign of the Emperor must precede the serial number of the patent document. [5] Kind of document by the appropriate symbols as indicated on the document under WIPO Standard ST.16 if possible. [6] Applicant is to place a check mark here if English language Translation is attached.

This collection of information is required by 37 CFR 1.97 and 1.98. The information is required to obtain or retain a benefit by the public which is to file (and by the USPTO to process) an application. Confidentiality is governed by 35 U.S.C. 122 and 37 CFR 1.14. This collection is estimated to take 2 hours to complete, including gathering, preparing, and submitting the completed application form to the USPTO. Time will vary depending upon the individual case. Any comments on the amount of time you require to complete this form and/or suggestions for reducing this burden, should be sent to the Chief Information Officer, U.S. Patent and Trademark Office, P.O. Box 1450, Alexandria, VA 22313-1450. DO NOT SEND FEES OR COMPLETED FORMS TO THIS ADDRESS. **SEND TO: Commissioner for Patents, P.O. Box 1450, Alexandria, VA 22313-1450.**

If you need assistance in completing the form, call 1-800-PTO-9199 (1-800-786-9199) and select option 2.

ALL REFERENCES CONSIDERED EXCEPT WHERE LINED THROUGH. /M.L/

Privacy Act Statement

The Privacy Act of 1974 (P.L. 93-579) requires that you be given certain information in connection with your submission of the attached form related to a patent application or patent. Accordingly, pursuant to the requirements of the Act, please be advised that: (1) the general authority for the collection of this information is 35 U.S.C. 2(b)(2); (2) furnishing of the information solicited is voluntary; and (3) the principal purpose for which the information is used by the U.S. Patent and Trademark Office is to process and/or examine your submission related to a patent application or patent. If you do not furnish the requested information, the U.S. Patent and Trademark Office may not be able to process and/or examine your submission, which may result in termination of proceedings or abandonment of the application or expiration of the patent.

The information provided by you in this form will be subject to the following routine uses:

1. The information on this form will be treated confidentially to the extent allowed under the Freedom of Information Act (5 U.S.C. 552) and the Privacy Act (5 U.S.C 552a). Records from this system of records may be disclosed to the Department of Justice to determine whether disclosure of these records is required by the Freedom of Information Act.
2. A record from this system of records may be disclosed, as a routine use, in the course of presenting evidence to a court, magistrate, or administrative tribunal, including disclosures to opposing counsel in the course of settlement negotiations.
3. A record in this system of records may be disclosed, as a routine use, to a Member of Congress submitting a request involving an individual, to whom the record pertains, when the individual has requested assistance from the Member with respect to the subject matter of the record.
4. A record in this system of records may be disclosed, as a routine use, to a contractor of the Agency having need for the information in order to perform a contract. Recipients of information shall be required to comply with the requirements of the Privacy Act of 1974, as amended, pursuant to 5 U.S.C. 552a(m).
5. A record related to an International Application filed under the Patent Cooperation Treaty in this system of records may be disclosed, as a routine use, to the International Bureau of the World Intellectual Property Organization, pursuant to the Patent Cooperation Treaty.
6. A record in this system of records may be disclosed, as a routine use, to another federal agency for purposes of National Security review (35 U.S.C. 181) and for review pursuant to the Atomic Energy Act (42 U.S.C. 218(c)).
7. A record from this system of records may be disclosed, as a routine use, to the Administrator, General Services, or his/her designee, during an inspection of records conducted by GSA as part of that agency's responsibility to recommend improvements in records management practices and programs, under authority of 44 U.S.C. 2904 and 2906. Such disclosure shall be made in accordance with the GSA regulations governing inspection of records for this purpose, and any other relevant (i.e., GSA or Commerce) directive. Such disclosure shall not be used to make determinations about individuals.
8. A record from this system of records may be disclosed, as a routine use, to the public after either publication of the application pursuant to 35 U.S.C. 122(b) or issuance of a patent pursuant to 35 U.S.C. 151. Further, a record may be disclosed, subject to the limitations of 37 CFR 1.14, as a routine use, to the public if the record was filed in an application which became abandoned or in which the proceedings were terminated and which application is referenced by either a published application, an application open to public inspection or an issued patent.
9. A record from this system of records may be disclosed, as a routine use, to a Federal, State, or local law enforcement agency, if the USPTO becomes aware of a violation or potential violation of law or regulation.

Bibliographic Data

Application No: 17/571,811

Foreign Priority claimed: ○ Yes ◉ No

35 USC 119 (a-d) conditions met: ☐ Yes ☑ No ☐ Met After Allowance

Verified and Acknowledged: /MICHELLE LOPEZ/ (Examiner's Signature) | ml (Initials)

Title: FASTENER DRIVING TOOL USING A GAS SPRING

FILING or 371(c) DATE	CLASS	GROUP ART UNIT	ATTORNEY DOCKET NO.
01/10/2022 **RULE**	227	3731	SEN0523.US10

APPLICANTS

Kyocera Senco Industrial Tools, Inc., Cincinnati, OH, UNITED STATES

INVENTORS

Richard L. Leimbach, Cincinnati, OH, UNITED STATES

Thomas A. McCardle, Cincinnati, OH, UNITED STATES

Danny L. Bolender, Sardinia, OH, UNITED STATES

Steve Dickinson, Cincinnati, OH, UNITED STATES

Joseph R. Knueven, Cincinnati, OH, UNITED STATES

Robert L. Lance JR., Midland, OH, UNITED STATES

Dan Stoltz, Sardinia, OH, UNITED STATES

Michael V. Petrocelli, Bethel, OH, UNITED STATES

CONTINUING DATA

This application is a CON of 16398944 04/30/2019 PAT 11241776

16398944 is a CON of 15583202 05/01/2017 PAT 10478954

15583202 is a CON of 14077313 11/12/2013 PAT 9676088

14077313 is a DIV of 13770481 02/19/2013 PAT 8602282

13770481 is a CON of 12913049 10/27/2010 PAT 8387718

12913049 is a DIV of 12243693 10/01/2008 PAT 8011441

12243693 has PRO of 60977678 10/05/2007

FOREIGN APPLICATIONS

IF REQUIRED, FOREIGN LICENSE GRANTED**

01/20/2022

STATE OR COUNTRY

UNITED STATES

ADDRESS

Frederick H. Gribbell, LLC
5515 Timber Way Drive
Cincinnati, OH 45238
UNITED STATES

FILING FEE RECEIVED

$1,820

PTO/SB/08a (02-18)
Approved for use through 11/30/2020. OMB 0651-0031
U.S. Patent and Trademark Office; U.S. DEPARTMENT OF COMMERCE
Under the Paperwork Reduction Act of 1995, no persons are required to respond to a collection of information unless it contains a valid OMB control number.

INFORMATION DISCLOSURE STATEMENT BY APPLICANT

(Not for submission under 37 CFR 1.99)

Application Number	
Filing Date	
First Named Inventor	Richard L. Leimbach, et al.
Art Unit	
Examiner Name	
Attorney Docket Number	SEN0523.US10

U.S.PATENTS Remove

Examiner Initial*	Cite No	Patent Number	Kind Code[1]	Issue Date	Name of Patentee or Applicant of cited Document	Pages,Columns,Lines where Relevant Passages or Relevant Figures Appear
	1	6938811		2005-09-06	Ehmig et al.	
	2	4215808		1980-08-05	Sollberger et al.	FIGS. 1,3,4,5; Col.4, ln.26-29; Col.6, ln.8-28; Col.6, ln.43-53; Col.7, ln.3-12; Col.8, ln.60-Col.9, ln.5.
	3	5720423		1998-02-24	Kondo et al.	
	4	2933290		1960-04-19	Ryder	
	5	3878902		1975-04-22	Matsuo	
	6	2575455		1951-11-20	Lang	
	7	4530455		1985-07-23	Vornberger	
	8	7225961		2007-06-05	Lee	

ALL REFERENCES CONSIDERED EXCEPT WHERE LINED THROUGH. /M.L/

INFORMATION DISCLOSURE STATEMENT BY APPLICANT (Not for submission under 37 CFR 1.99)		
	Application Number	
	Filing Date	
	First Named Inventor	Richard L. Leimbach, et al.
	Art Unit	
	Examiner Name	
	Attorney Docket Number	SEN0523.US10

	9	7225962		2007-06-05	Porth et al.	
	10	6997367		2006-02-14	Hu	
	11	4203353		1980-05-20	Bernham et al.	
	12	5503319		1996-04-02	Lai	
	13	6533156		2003-03-18	Chang	
	14	7040521		2006-05-09	Kolodziej et al.	
	15	3924692		1975-12-09	Saari	
	16	3150488		1964-09-29	Haley	
	17	1774967		1930-09-02	Ellis	
	18	3847322		1974-11-12	Smith	
	19	3913685		1975-10-21	Enstrom	

INFORMATION DISCLOSURE STATEMENT BY APPLICANT (Not for submission under 37 CFR 1.99)		
	Application Number	
	Filing Date	
	First Named Inventor	Richard L. Leimbach, et al.
	Art Unit	
	Examiner Name	
	Attorney Docket Number	SEN0523.US10

	20	2814041		1957-11-26	Haley	
	21	4741518		1988-05-03	Wallis	
	22	3589588		1971-06-29	Vasku	
	23	5199627		1993-04-06	Christensen	
	24	5605268		1997-02-25	Hayashi	
	25	7494036		2009-02-24	Shima	

If you wish to add additional U.S. Patent citation information please click the Add button. Add

U.S.PATENT APPLICATION PUBLICATIONS Remove

Examiner Initial*	Cite No	Publication Number	Kind Code[1]	Publication Date	Name of Patentee or Applicant of cited Document	Pages,Columns,Lines where Relevant Passages or Relevant Figures Appear
	1	20070045377		2007-03-01	Towfighi	
	2	20030218042		2003-11-27	Odoni et al.	
	3	20060180631		2006-08-17	Pedicini	FIGS. 1-4; Pg.2 [0020]; Pg.4 [0077]; Pg.5 [0080], [0081], [0082].

INFORMATION DISCLOSURE STATEMENT BY APPLICANT (Not for submission under 37 CFR 1.99)		
	Application Number	
	Filing Date	
	First Named Inventor	Richard L. Leimbach, et al.
	Art Unit	
	Examiner Name	
	Attorney Docket Number	SEN0523.US10

	4	20050082334		2005-04-21	Hu	
	5	20080190988		2008-08-14	Pedicini	
	6	20050217875		2005-10-06	Forster	
	7	20080067213		2008-03-20	Shima	
	8	20070007319		2007-01-11	Simonelli	
	9	20080041914		2008-02-21	Simonelli	

If you wish to add additional U.S. Published Application citation information please click the Add button. Add

FOREIGN PATENT DOCUMENTS Remove

Examiner Initial*	Cite No	Foreign Document Number[3]	Country Code[2] i	Kind Code[4]	Publication Date	Name of Patentee or Applicant of cited Document	Pages,Columns,Lines where Relevant Passages or Relevant Figures Appear	T[5]
	1	1503164	DE		1970-03-19	Haley	See US 3,150,488 (above)	☒
	2	1559571	GB		1980-01-23	Blumham et al.		☐
	3	3711784	DE		1987-08-26	Hauck		☒

If you wish to add additional Foreign Patent Document citation information please click the Add button Add

ALL REFERENCES CONSIDERED EXCEPT WHERE LINED THROUGH. /M.L/

INFORMATION DISCLOSURE STATEMENT BY APPLICANT (Not for submission under 37 CFR 1.99)		
	Application Number	
	Filing Date	
	First Named Inventor	Richard L. Leimbach, et al.
	Art Unit	
	Examiner Name	
	Attorney Docket Number	SEN0523.US10

NON-PATENT LITERATURE DOCUMENTS Remove

Examiner Initials*	Cite No	Include name of the author (in CAPITAL LETTERS), title of the article (when appropriate), title of the item (book, magazine, journal, serial, symposium, catalog, etc), date, pages(s), volume-issue number(s), publisher, city and/or country where published.	T[5]
	1	International Search Report, PCT/US2008/078408, 10 pages (December 8, 2008)	
	2	Two-page "TOOL ASSEMBLY" drawing of Senco Model No. SN952XP pneumatic tool; dated March 4, 2008; representative of earlier tools in public use before 2006; ADMITTED PRIOR ART.	
	3	One-page magnified view of "TOOL ASSEMBLY" drawing of Senco Model No. SN952XP pneumatic tool; March 4, 2008; representative of earlier tools in public use before 2006; ADMITTED PRIOR ART.	
	4	European Search Report for EP 08 83 4872, November 19, 2015.	
	5	Sixteen page Operating Instructions for Senco AirFree 41 Cordless Finish Nailer; September 7, 2001. NOTE: this is an old "flywheel" tool--see Patent No. US 6669072.	
	6	Four page Parts Reference Guide for Senco AirFree 41 Cordless Finish Nailer; 2004. NOTE: this is an old "flywheel" tool--see Patent No. US 6669072.	
	7	Four page Parts Reference Guide for Senco Cordless Finish 41 15 ga. Finish Nailer; 2008. NOTE: this is an old "flywheel" tool--see Patent No. US 6669072.	

If you wish to add additional non-patent literature document citation information please click the Add button Add

EXAMINER SIGNATURE

Examiner Signature	/MICHELLE LOPEZ/	Date Considered	02/20/2023

*EXAMINER: Initial if reference considered, whether or not citation is in conformance with MPEP 609. Draw line through a citation if not in conformance and not considered. Include copy of this form with next communication to applicant.

INFORMATION DISCLOSURE STATEMENT BY APPLICANT (Not for submission under 37 CFR 1.99)	Application Number	
	Filing Date	
	First Named Inventor	Richard L. Leimbach, et al.
	Art Unit	
	Examiner Name	
	Attorney Docket Number	SEN0523.US10

[1] See Kind Codes of USPTO Patent Documents at www.USPTO.GOV or MPEP 901.04. [2] Enter office that issued the document, by the two-letter code (WIPO Standard ST.3). [3] For Japanese patent documents, the indication of the year of the reign of the Emperor must precede the serial number of the patent document. [4] Kind of document by the appropriate symbols as indicated on the document under WIPO Standard ST.16 if possible. [5] Applicant is to place a check mark here if English language translation is attached.

INFORMATION DISCLOSURE STATEMENT BY APPLICANT (Not for submission under 37 CFR 1.99)	Application Number	
	Filing Date	
	First Named Inventor	Richard L. Leimbach, et al.
	Art Unit	
	Examiner Name	
	Attorney Docket Number	SEN0523.US10

CERTIFICATION STATEMENT

Please see 37 CFR 1.97 and 1.98 to make the appropriate selection(s):

That each item of information contained in the information disclosure statement was first cited in any communication from a foreign patent office in a counterpart foreign application not more than three months prior to the filing of the information disclosure statement. See 37 CFR 1.97(e)(1).

OR

☐ That no item of information contained in the information disclosure statement was cited in a communication from a foreign patent office in a counterpart foreign application, and, to the knowledge of the person signing the certification after making reasonable inquiry, no item of information contained in the information disclosure statement was known to any individual designated in 37 CFR 1.56(c) more than three months prior to the filing of the information disclosure statement. See 37 CFR 1.97(e)(2).

See attached certification statement.

The fee set forth in 37 CFR 1.17 (p) has been submitted herewith.

X A certification statement is not submitted herewith.

SIGNATURE

A signature of the applicant or representative is required in accordance with CFR 1.33, 10.18. Please see CFR 1.4(d) for the form of the signature.

Signature	/Russell Gribbell/	Date (YYYY-MM-DD)	2022-01-10
Name/Print	Russell F. Gribbell	Registration Number	77316

This collection of information is required by 37 CFR 1.97 and 1.98. The information is required to obtain or retain a benefit by the public which is to file (and by the USPTO to process) an application. Confidentiality is governed by 35 U.S.C. 122 and 37 CFR 1.14. This collection is estimated to take 1 hour to complete, including gathering, preparing and submitting the completed application form to the USPTO. Time will vary depending upon the individual case. Any comments on the amount of time you require to complete this form and/or suggestions for reducing this burden, should be sent to the Chief Information Officer, U.S. Patent and Trademark Office, U.S. Department of Commerce, P.O. Box 1450, Alexandria, VA 22313-1450. DO NOT SEND FEES OR COMPLETED FORMS TO THIS ADDRESS. **SEND TO: Commissioner for Patents, P.O. Box 1450, Alexandria, VA 22313-1450.**

Privacy Act Statement

The Privacy Act of 1974 (P.L. 93-579) requires that you be given certain information in connection with your submission of the attached form related to a patent application or patent. Accordingly, pursuant to the requirements of the Act, please be advised that: (1) the general authority for the collection of this information is 35 U.S.C. 2(b)(2); (2) furnishing of the information solicited is voluntary; and (3) the principal purpose for which the information is used by the U.S. Patent and Trademark Office is to process and/or examine your submission related to a patent application or patent. If you do not furnish the requested information, the U.S. Patent and Trademark Office may not be able to process and/or examine your submission, which may result in termination of proceedings or abandonment of the application or expiration of the patent.

The information provided by you in this form will be subject to the following routine uses:

1. The information on this form will be treated confidentially to the extent allowed under the Freedom of Information Act (5 U.S.C. 552) and the Privacy Act (5 U.S.C. 552a). Records from this system of records may be disclosed to the Department of Justice to determine whether the Freedom of Information Act requires disclosure of these record s.

2. A record from this system of records may be disclosed, as a routine use, in the course of presenting evidence to a court, magistrate, or administrative tribunal, including disclosures to opposing counsel in the course of settlement negotiations.

3. A record in this system of records may be disclosed, as a routine use, to a Member of Congress submitting a request involving an individual, to whom the record pertains, when the individual has requested assistance from the Member with respect to the subject matter of the record.

4. A record in this system of records may be disclosed, as a routine use, to a contractor of the Agency having need for the information in order to perform a contract. Recipients of information shall be required to comply with the requirements of the Privacy Act of 1974, as amended, pursuant to 5 U.S.C. 552a(m).

5. A record related to an International Application filed under the Patent Cooperation Treaty in this system of records may be disclosed, as a routine use, to the International Bureau of the World Intellectual Property Organization, pursuant to the Patent Cooperation Treaty.

6. A record in this system of records may be disclosed, as a routine use, to another federal agency for purposes of National Security review (35 U.S.C. 181) and for review pursuant to the Atomic Energy Act (42 U.S.C. 218(c)).

7. A record from this system of records may be disclosed, as a routine use, to the Administrator, General Services, or his/her designee, during an inspection of records conducted by GSA as part of that agency's responsibility to recommend improvements in records management practices and programs, under authority of 44 U.S.C. 2904 and 2906. Such disclosure shall be made in accordance with the GSA regulations governing inspection of records for this purpose, and any other relevant (i.e., GSA or Commerce) directive. Such disclosure shall not be used to make determinations about individuals.

8. A record from this system of records may be disclosed, as a routine use, to the public after either publication of the application pursuant to 35 U.S.C. 122(b) or issuance of a patent pursuant to 35 U.S.C. 151. Further, a record may be disclosed, subject to the limitations of 37 CFR 1.14, as a routine use, to the public if the record was filed in an application which became abandoned or in which the proceedings were terminated and which application is referenced by either a published application, an application open to public inspections or an issued patent.

9. A record from this system of records may be disclosed, as a routine use, to a Federal, State, or local law enforcement agency, if the USPTO becomes aware of a violation or potential violation of law or regulation.

UNITED STATES PATENT AND TRADEMARK OFFICE

UNITED STATES DEPARTMENT OF COMMERCE
United States Patent and Trademark Office
Address: COMMISSIONER FOR PATENTS
P.O. Box 1450
Alexandria, Virginia 22313-1450
www.uspto.gov

APPLICATION NO.	FILING DATE	FIRST NAMED INVENTOR	ATTORNEY DOCKET NO.	CONFIRMATION NO.
17/571,811	01/10/2022	Richard L. Leimbach	SEN0523.US10	1007

40628 7590 02/22/2023
Frederick H. Gribbell, LLC
5515 Timber Way Drive
Cincinnati, OH 45238

EXAMINER
LOPEZ, MICHELLE

ART UNIT	PAPER NUMBER
3731	

MAIL DATE	DELIVERY MODE
02/22/2023	PAPER

Please find below and/or attached an Office communication concerning this application or proceeding.

The time period for reply, if any, is set in the attached communication.

PTOL-90A (Rev. 04/07)

Office Action Summary	Application No. 17/571,811	Applicant(s) Leimbach et al.	
	Examiner MICHELLE LOPEZ	Art Unit 3731	AIA (FITF) Status No

-- The MAILING DATE of this communication appears on the cover sheet with the correspondence address --

Period for Reply

A SHORTENED STATUTORY PERIOD FOR REPLY IS SET TO EXPIRE 3 MONTHS FROM THE MAILING DATE OF THIS COMMUNICATION.

- Extensions of time may be available under the provisions of 37 CFR 1.136(a). In no event, however, may a reply be timely filed after SIX (6) MONTHS from the mailing date of this communication.
- If NO period for reply is specified above, the maximum statutory period will apply and will expire SIX (6) MONTHS from the mailing date of this communication.
- Failure to reply within the set or extended period for reply will, by statute, cause the application to become ABANDONED (35 U.S.C. § 133). Any reply received by the Office later than three months after the mailing date of this communication, even if timely filed, may reduce any earned patent term adjustment. See 37 CFR 1.704(b).

Status

1)☑ Responsive to communication(s) filed on 1/10/22.

☐ A declaration(s)/affidavit(s) under **37 CFR 1.130(b)** was/were filed on _____.

2a)☐ This action is **FINAL.** 2b) ☑ This action is non-final.

3)☐ An election was made by the applicant in response to a restriction requirement set forth during the interview on _____; the restriction requirement and election have been incorporated into this action.

4)☐ Since this application is in condition for allowance except for formal matters, prosecution as to the merits is closed in accordance with the practice under *Ex parte Quayle*, 1935 C.D. 11, 453 O.G. 213.

Disposition of Claims*

5) ☑ Claim(s) 1-14 is/are pending in the application.

5a) Of the above claim(s) _____ is/are withdrawn from consideration.

6) ☑ Claim(s) 9-14 is/are allowed.

7) ☑ Claim(s) 1-8 is/are rejected.

8) ☐ Claim(s) _____ is/are objected to.

9) ☐ Claim(s) _____ are subject to restriction and/or election requirement

* If any claims have been determined allowable, you may be eligible to benefit from the **Patent Prosecution Highway** program at a participating intellectual property office for the corresponding application. For more information, please see http://www.uspto.gov/patents/init_events/pph/index.jsp or send an inquiry to **PPHfeedback@uspto.gov.**

Application Papers

10)☐ The specification is objected to by the Examiner.

11)☐ The drawing(s) filed on _____ is/are: a)☐ accepted or b)☐ objected to by the Examiner.

Applicant may not request that any objection to the drawing(s) be held in abeyance. See 37 CFR 1.85(a).

Replacement drawing sheet(s) including the correction is required if the drawing(s) is objected to. See 37 CFR 1.121(d).

Priority under 35 U.S.C. § 119

12)☐ Acknowledgment is made of a claim for foreign priority under 35 U.S.C. § 119(a)-(d) or (f).

Certified copies:

a)☐ All b)☐ Some** c)☐ None of the:

1.☐ Certified copies of the priority documents have been received.

2.☐ Certified copies of the priority documents have been received in Application No. _____.

3.☐ Copies of the certified copies of the priority documents have been received in this National Stage application from the International Bureau (PCT Rule 17.2(a)).

** See the attached detailed Office action for a list of the certified copies not received.

Attachment(s)

1) ☑ Notice of References Cited (PTO-892)

2) ☑ Information Disclosure Statement(s) (PTO/SB/08a and/or PTO/SB/08b) Paper No(s)/Mail Date _____.

3) ☐ Interview Summary (PTO-413) Paper No(s)/Mail Date _____.

4) ☐ Other: _____.

Notice of Pre-AIA or AIA Status

1. The present application is being examined under the pre-AIA first to invent provisions.

2. This action is in response to the application filed on 01/10/22.

3. Claims 1-14 are pending and have been examined.

Information Disclosure Statement

4. The information disclosure statement (IDS) submitted on 01/10/22 are in compliance with the provisions of 37 CFR 1.97. Accordingly, the information disclosure statement is being considered by the examiner.

Claim Rejections - 35 USC § 112

The following is a quotation of 35 U.S.C. 112(b):
(b) CONCLUSION.—The specification shall conclude with one or more claims particularly pointing out and distinctly claiming the subject matter which the inventor or a joint inventor regards as the invention.

The following is a quotation of 35 U.S.C. 112 (pre-AIA), second paragraph:
The specification shall conclude with one or more claims particularly pointing out and distinctly claiming the subject matter which the applicant regards as his invention.

5. Claims 5-8 are rejected under 35 U.S.C. 112(b) or 35 U.S.C. 112 (pre-AIA), second paragraph, as being indefinite for failing to particularly point out and distinctly claim the subject matter which the inventor or a joint inventor (or for applications subject to pre-AIA 35 U.S.C. 112, the applicant), regards as the invention.

In claim 5, the limitation of "during an operating cycle, a displacement volume of the hollow cylinder is always in fluidic communication with said main storage chamber" is functional and predicated on a future act. The functional language is no supported by sufficient structure such as a strucutral connection between the cylinder and the chamber capable of displace a volume of pressurized gas between them. Also, it is

unclear to determine what is specifically described by “a displacement volume”. Note that there is pressurized gas displaced within the cylinder above and below the piston.

Claim Rejections - 35 USC § 102

The following is a quotation of the appropriate paragraphs of pre-AIA 35 U.S.C. 102 that form the basis for the rejections under this section made in this Office action:

> A person shall be entitled to a patent unless –
>
> (b) the invention was patented or described in a printed publication in this or a foreign country or in public use or on sale in this country, more than one year prior to the date of application for patent in the United States.

6. Claim(s) 1-4 is/are rejected under pre-AIA 35 U.S.C. 102b as being anticipated by Sollberger et al. (4,215,808).

Regarding claim 1, Sollberger discloses a portable fastener driving tool, comprising: a housing (Fig. 2) with a storage chamber (not shown numerically) that contains a pressurized gas (col. 6, lines 50-55), a hollow cylinder (49) that includes a movable piston (55), a movable driver (30) that is in communication with said piston at least during a drive stroke, a lifter (22) that is in communication with said driver at least during a return stroke, a prime mover (16), and a source of energy (i.e. battery 19); said storage chamber (not shown numerically) being in fluidic communication with said hollow cylinder (col. 6, lines 50-55); said storage chamber including a removable top cap (51) at a location proximal to an end of said hollow cylinder (Fig. 3).

Regarding claim 2, Sollberger discloses wherein said movable driver (30) including at least one protrusion (flanges 31, 32); and said lifter (22) including at least one extension (61); wherein: said at least one extension of the lifter mechanically engages with said at least one protrusion of the driver during said return stroke.

Regarding claim 3, Sollberger discloses a guide body (formed by plates; Figs. 4-5) with a linear passageway for said driver; wherein: said lifter moves in a rotational motion and causes said driver to move in a linear motion along said linear passageway.

Regarding claim 4, Sollberger discloses wherein said cylinder and piston act as a gas spring during said drive stroke, and said lifter does not mechanically engage said driver during said drive stroke (col. 6, lines 8-29).

Allowable Subject Matter

7. Claims 5-8 would be allowable if rewritten or amended to overcome the rejection(s) under 35 U.S.C. 112(b) or 35 U.S.C. 112 (pre-AIA), 2nd paragraph, set forth in this Office action.

8. Claims 9-14 are allowed.

Reasons for allowance

8. The following is an examiner's statement of reasons for allowance. The prior art of record fails to anticipate or show in combination all the features of applicant's invention: Claim 9 recites a novel portable fastener driving tool comprising a safety contact element proximal to said exit end, said safety contact element being disposed at a front portion of the tool, above said guide body. It is the safety contact disposed above the guide body in combination with the other claimed elements of the device that are

novel over the prior art of record.

Conclusion

6. Any inquiry concerning this communication or earlier communications from the examiner should be directed to MICHELLE LOPEZ whose telephone number is (571)272-4464. The examiner can normally be reached Monday thru Friday 8:30 am to 4:30 pm.

Examiner interviews are available via telephone, in-person, and video conferencing using a USPTO supplied web-based collaboration tool. To schedule an interview, applicant is encouraged to use the USPTO Automated Interview Request (AIR) at http://www.uspto.gov/interviewpractice.

If attempts to reach the examiner by telephone are unsuccessful, the examiner's supervisor, Anna Kinsaul can be reached on (571) 270 - 1926. The fax phone number for the organization where this application or proceeding is assigned is 571-273-8300.

Information regarding the status of published or unpublished applications may be obtained from Patent Center. Unpublished application information in Patent Center is available to registered users. To file and manage patent submissions in Patent Center, visit: https://patentcenter.uspto.gov. Visit https://www.uspto.gov/patents/apply/patent-center for more information about Patent Center and https://www.uspto.gov/patents/docx for information about filing in DOCX format. For additional questions, contact the Electronic Business Center (EBC) at 866-217-9197 (toll-free). If you would like assistance from a USPTO Customer Service Representative, call 800-786-9199 (IN USA OR CANADA) or 571-272-1000.

/MICHELLE LOPEZ/
Primary Examiner, Art Unit 3731

PTO/SB/06 (09-11)
Approved for use through 1/31/2014. OMB 0651-0032
U.S. Patent and Trademark Office; U.S. DEPARTMENT OF COMMERCE
Under the Paperwork Reduction Act of 1995, no persons are required to respond to a collection of information unless it displays a valid OMB control number.

PATENT APPLICATION FEE DETERMINATION RECORD Substitute for Form PTO-875	Application or Docket Number 17/571,811	Filing Date 01/10/2022	☐ To be Mailed

ENTITY: ☑ LARGE ☐ SMALL ☐ MICRO

APPLICATION AS FILED - PART I

FOR	(Column 1) NUMBER FILED	(Column 2) NUMBER EXTRA		RATE ($)	FEE ($)
☐ BASIC FEE (37 CFR 1.16(a), (b), or (c))	N/A	N/A		N/A	
☐ SEARCH FEE (37 CFR 1.16(k), (i), or (m))	N/A	N/A		N/A	
☐ EXAMINATION FEE (37 CFR 1.16(o), (p), or (q))	N/A	N/A		N/A	
TOTAL CLAIMS (37 CFR 1.16(i))	minus 20 =	*		x $100 =	
INDEPENDENT CLAIMS (37 CFR 1.16(h))	minus 3 =	*		x $480 =	
☐ APPLICATION SIZE FEE (37 CFR 1.16(s))	If the specification and drawings exceed 100 sheets of paper, the application size fee due is $310 ($155 for small entity) for each additional 50 sheets or fraction thereof. See 35 U.S.C. 41(a)(1)(G) and 37 CFR 1.16(s).				
☐ MULTIPLE DEPENDENT CLAIM PRESENT (37 CFR 1.16(j))					
* If the difference in column 1 is less than zero, enter "0" in column 2.				TOTAL	

APPLICATION AS AMENDED - PART II

AMENDMENT		(Column 1) CLAIMS REMAINING AFTER AMENDMENT		(Column 2) HIGHEST NUMBER PREVIOUSLY PAID FOR	(Column 3) PRESENT EXTRA		RATE ($)	ADDITIONAL FEE ($)
	05/22/2023							
	Total (37 CFR 1.16(i))	* 15	Minus	** 20	= 0		x $100 =	0
	Independent (37 CFR 1.16(h))	* 3	Minus	*** 3	= 0		x $480 =	0
	☐ Application Size Fee (37 CFR 1.16(s))							
	☐ FIRST PRESENTATION OF MULTIPLE DEPENDENT CLAIM (37 CFR 1.16(j))							
							TOTAL ADD'L FEE	0

AMENDMENT		(Column 1) CLAIMS REMAINING AFTER AMENDMENT		(Column 2) HIGHEST NUMBER PREVIOUSLY PAID FOR	(Column 3) PRESENT EXTRA		RATE ($)	ADDITIONAL FEE ($)
	Total (37 CFR 1.16(i))	*	Minus	**	=		x $0 =	
	Independent (37 CFR 1.16(h))	*	Minus	***	=		x $0 =	
	☐ Application Size Fee (37 CFR 1.16(s))							
	☐ FIRST PRESENTATION OF MULTIPLE DEPENDENT CLAIM (37 CFR 1.16(j))							
							TOTAL ADD'L FEE	

* If the entry in column 1 is less than the entry in column 2, write "0" in column 3.	LIE
** If the "Highest Number Previously Paid For" IN THIS SPACE is less than 20, enter "20".	/DAWN BREWER/
*** If the "Highest Number Previously Paid For" IN THIS SPACE is less than 3, enter "3".	
The "Highest Number Previously Paid For" (Total or Independent) is the highest number found in the appropriate box in column 1.	

This collection of information is required by 37 CFR 1.16. The information is required to obtain or retain a benefit by the public which is to file (and by the USPTO to process) an application. Confidentiality is governed by 35 U.S.C. 122 and 37 CFR 1.14. This collection is estimated to take 12 minutes to complete, including gathering, preparing, and submitting the completed application form to the USPTO. Time will vary depending upon the individual case. Any comments on the amount of time you require to complete this form and/or suggestions for reducing this burden, should be sent to the Chief Information Officer, U.S. Patent and Trademark Office, U.S. Department of Commerce, P.O. Box 1450, Alexandria, VA 22313-1450. DO NOT SEND FEES OR COMPLETED FORMS TO THIS ADDRESS. **SEND TO: Commissioner for Patents, P.O. Box 1450, Alexandria, VA 22313-1450.**

If you need assistance in completing the form, call 1-800-PTO-9199 and select option 2.

PATENT

IN THE UNITED STATES PATENT AND TRADEMARK OFFICE

Inventor:	Richard L. Leimbach	: Art Unit: 3731
Serial No.:	17/571,811	: Examiner: Michelle Lopez
Filed:	January 10, 2022	: Confirmation No. 1007

For: **FASTENER DRIVING TOOL USING A GAS SPRING**

AMENDMENT

Mail Stop Amendment
COMMISSIONER FOR PATENTS
PO Box 1450
Alexandria, VA 22313-1450

Dear Sir or Madam:

INTRODUCTORY COMMENTS

Claims 1-14 are pending in the application.

Claims 1-8 currently stand rejected (a non-Final rejection).

Claims 9-14 are allowed.

Please amend the above-identified application as follows, and please consider the arguments presented below.

Koki Holdings America Ltd.
Ex. 1002, p. 302

AMENDMENTS TO THE CLAIMS

Please add *new* claim 15, as below.

Please amend claims 1 and 5, as follows:

1. (Currently amended) A portable fastener driving tool, comprising:

a housing with a storage chamber that contains a pressurized gas that is always above atmospheric pressure; [[,]]

a hollow cylinder that includes a movable piston; [[,]]

a movable driver that is in communication with said piston at least during a drive stroke; [[,]]

a lifter that is in communication with said driver at least during a return stroke; [[,]]

a prime mover; [[,]] and

a source of electrical energy that is removably attached to said housing;

said storage chamber being in fluidic communication with a first end of said hollow cylinder; and

said storage chamber including a removable top cap at a location proximal to [[an]] said first end of said hollow cylinder;

wherein:

said piston travels through said hollow cylinder between a higher pressure position and a lower pressure position; said piston has a rest position between operational cycles; and a location of said rest position is proximal to said higher pressure position; and

said pressurized gas is not vented to atmosphere after said drive stroke.

2. (Original) The tool of claim 1, further comprising:

said movable driver including at least one protrusion; and

said lifter including at least one extension;

wherein:

said at least one extension of the lifter mechanically engages with said at least one protrusion of the driver during said return stroke.

3. (Original) The tool of claim 2, further comprising:

a guide body with a linear passageway for said driver;

wherein: said lifter moves in a rotational motion and causes said driver to move in a linear motion along said linear passageway.

4. (Original) The tool of claim 2, wherein:

said cylinder and piston act as a gas spring during said drive stroke, and said lifter does not mechanically engage said driver during said drive stroke.

5. (Currently amended) A portable fastener driving tool, comprising:

a housing with a main storage chamber that contains a pressurized gas;

a hollow cylinder that includes a movable piston, wherein:

(a) ~~during an operating cycle, a displacement volume~~ a first end of the hollow cylinder is always in fluidic communication with said main storage chamber, and

(b) said pressurized gas is not exhausted to atmosphere after a drive ~~driving~~ stroke~~, but instead is re-used for a plurality of said operating cycles~~;

a driver that is in communication with said piston at least during a drive stroke;

a lifter that is in communication with said driver at least during a return stroke;

a guide body with a linear passageway for said driver;

a handle portion;

a motor that provides motive power for said lifter;

a removable battery pack that provides energy for said motor; and

a removable magazine that holds a plurality of fasteners;

wherein:

said removable battery pack is attached proximal to said handle portion; and

said removable magazine is attached proximal to an exit end of said guide body, wherein said magazine extends past said removable battery pack.

6. (Original) The tool of claim 5, further comprising:

said movable driver including at least one protrusion; and

said lifter including at least one extension;

wherein, during said return stroke:

(a) said at least one extension of the lifter mechanically engages with said at least one protrusion of the driver, and

(b) said lifter moves in a rotational motion and causes said driver to move in a linear motion along said linear passageway.

7. (Original) The tool of claim 6, wherein:

said cylinder and piston act as a gas spring during said drive stroke, and said lifter does not engage said driver during said drive stroke.

8. (Original) The tool of claim 5, wherein:

a bottommost surface of said magazine is farther from a centerline of said exit end of the guide body than is a bottommost surface of said battery pack.

9. (Original) A portable fastener driving tool, comprising:

(a) a housing with a storage chamber that contains a pressurized gas;

(b) a hollow cylinder that includes a movable piston, wherein said storage chamber is in fluidic communication with said hollow cylinder;

(c) a movable driver that is in communication with said piston at least during a drive stroke;

(d) a lifter that is in communication with said driver at least during a return stroke;

(e) a guide body that is located proximal to said hollow cylinder, and having a linear passageway for said driver, and having an exit end that is located distal from said hollow cylinder;

(f) a removable battery pack that is located at a rear portion of said tool; and

(g) a safety contact element proximal to said exit end, said safety contact element being disposed at a front portion of the tool, above said guide body.

10. (Original) The tool of claim 9, further comprising:

an electric motor that derives energy from said battery pack, which provides motive power for said lifter.

11. (Original) The tool of claim 10, wherein:

said safety contact element prevents said drive stroke from occurring unless said safety contact element is pressed against a solid surface.

12. (Original) The tool of claim 10, further comprising:

(a) said movable driver including at least one protrusion; and

(b) said lifter including at least one extension;

(c) wherein, during said return stroke:

(i) said at least one extension of the lifter mechanically engages with said at least one protrusion of the driver, and

(ii) said lifter moves in a rotational motion and causes said driver to move in a linear motion along said linear passageway.

13. (Original) The tool of claim 10, wherein:

said cylinder and piston act as a gas spring during said drive stroke, and said lifter does not engage said driver during said drive stroke.

14. (Original) The tool of claim 9, wherein:

said safety contact element is located directly above said guide body, and extends from said front portion of the tool toward a rear portion of the tool, extending along at least a surface of the guide body that is on the opposite side of the tool from where said battery pack is located.

15. (New) The tool of claim 1, wherein the piston is positioned inside the top cover when the piston is at or near the first end of the hollow cylinder.

REMARKS

Indefiniteness Rejections

In the Office Action mailed on February 22, 2023, the Examiner rejected claims 5-8 for being indefinite. In particular, the Examiner stated that claim 5's limitation of "during an operating cycle, a displacement volume of the hollow cylinder is always in fluidic communication with said main storage chamber" is functional and predicated on a future act. The Examiner also stated that there is pressurized gas displaced with the cylinder above and below the piston.

Applicant respectfully disagrees with the Examiner's statement that "pressurized gas [is] displaced with the cylinder above and below the piston." The volume 'below' the piston is specifically described as a "venting chamber" 94 (depicted on FIG. 2), and the specification clearly states that the venting chamber is at atmospheric pressure (see paragraph [0074]). The gas above the piston is highly pressurized, around 100 PSIG to 120 PSIG, for example (see paragraph [0090]). In other words, the volume below the piston (at 94) is not pressurized at all—it is at atmospheric pressure, which is zero PSI 'gauge' pressure, and can do no work. Realistically, the only thing the air molecules in that volume below the piston can do is to get out of the way when the piston is being driven by the highly pressurized gas that is above the piston (during a drive stroke).

While the Examiner is correct in stating that gas 'below' the piston (i.e., "air" in this case) is displaced within the cylinder, that, however, is not gas that is able to do any work, and Applicant did not define that portion of the cylinder to be part of the "displacement volume" of this structure. The Examiner also stated that it was unclear what was meant by the term "displacement volume" in the instant application. Please note: that term is defined in Paragraph [0079] in conjunction with FIGS. 2 and 3, in which the reference numeral 76 represents a gas pressure chamber (of variable size) that is formed by the stroke of the piston. In FIG. 2, the volume (or space) 76 is relatively small, since the piston has moved to an upper position, while in FIG. 3, the volume (or space) 76 is much larger, since the piston has moved to a lower position. This space 76 is the "displacement volume."

Admittedly, the definition in Paragraph [0079] could have been more clear, but it does state

that the "displacement volume" 76 is variable in size, and that it is formed by the stroke of the piston. Moreover, the "venting chamber" 94 is definitely 'below' the piston, as seen in FIG. 2, and thus, it is not part of the 'high pressure' gas that exists 'above' the piston. Finally, please note that this discussion about the "displacement volume" 76 and the "venting chamber" 94 is merely to clarify this particular terminology, so it will be more clearly understood if used in any of Applicant's claims. However, Applicant is amending this claim language—see below.

Applicant has amended independent claim 5 to remove the so-called "functional" language, and instead recites that "a first end of the hollow cylinder is always in fluidic communication with said main storage chamber," and "said pressurized gas is not exhausted to atmosphere after a drive stroke." Applicant respectfully submits that amended claim 5 is not indefinite, and that claims 5-8 should now be allowable.

Please note: the above-noted amendments to the claims are being made solely for the purpose of overcoming § 112 rejections by the Examiner; the amendments are <u>not</u> for a reason related to patentability in view of prior art.

<u>Prior Art Rejections</u>

In the above-identified Office Action, the Examiner rejected claims 1-4 as being anticipated by Sollberger (4,215,808). Sollberger discloses a portable fastener driving tool, including a cylinder 49, an air spring 21, a piston 51, a cylinder wall 50, and an end cap 51 (see Sollberger, FIG. 3). The piston 51 is raised, compressing the gas (i.e., the air spring 21) inside the cylinder 49. It should be noted that Sollberger does not have a "prime mover" nor a power source on board his tool; instead, that prime mover (an electric motor 16) and power source (a battery pack 19, or an electrical power cord 18) are carried on a belt by the human operator of the tool. From that standpoint alone, the Sollberger 'system' is very different from the claimed apparatus of this instant application. The Sollberger device definitely is not a stand-alone tool.

Applicant has amended claim 1 to include a limitation about the location of a "rest position" of the piston between operational cycles, which is quite unlike that disclosed in Sollberger. Applicant respectfully submits that claim 1 should now be allowable over the prior art of record.

Sollberger fails to teach or suggest the features of amended claim 1, such as, for example: a portable fastener driving tool that comprises a storage chamber that contains a pressurized gas that is always above atmospheric pressure; a hollow cylinder that includes a movable piston; and a source of electrical energy that is removably attached to said housing; in which "said piston travels through said hollow cylinder between a higher pressure position and a lower pressure position; said piston has a rest position between operational cycles; and a location of said rest position is proximal to said higher pressure position; and said pressurized gas is not vented to atmosphere after said drive stroke."

New Claim

Claim 15 has been added herein. Claim 15 depends from independent claim 1. Support for the subject matter of claim 15 is found in FIG. 4 of the instant application—see the orientation of the upper portion of the piston 80, as compared to the bottom portion of the "top cap 72" (note that FIG. 5 shows the upper portion of the piston 80 better than FIG. 4); and also in FIG. 17 of the instant application—see the orientation of the upper portion (which is to the left in this view) of the piston 458, as compared to the bottom portions (which is to the right in this view) of the combination of the "top" cover 412 portion and the "right" cover 411 portion.

Conclusion

Applicant has amended claim 5 to overcome an indefiniteness rejection. Applicant has amended claim 1 to overcome the cited prior art of Sollberger, and has pointed out some significant differences between the prior art and the amended claims.

There are now fifteen (15) total claims pending, of which three (3) are independent. There should be no fees associated with this amendment. However, the Director of Patents and Trademarks is hereby authorized to charge any underpayment of fees incurred due to this amendment to Deposit Account No. 50-2116.

Applicant respectfully requests the Examiner to favorably reconsider and allow the pending claims.

Respectfully submitted,

RICHARD L. LEIMBACH

By: *___/ Russell F. Gribbell /_____*

Russell F. Gribbell
Attorney for Applicant
Registration No. 77,316

FREDERICK H. GRIBBELL, LLC
5515 Timber Way Drive
Cincinnati, Ohio 45238
(513) 891-2100
FAX: (513) 891-2100
e-mail: patents@gribbelllaw.com

(Submitted electronically, May 22, 2023)

Electronic Acknowledgement Receipt

EFS ID:	48037823
Application Number:	17571811
International Application Number:	
Confirmation Number:	1007
Title of Invention:	FASTENER DRIVING TOOL USING A GAS SPRING
First Named Inventor/Applicant Name:	Richard L. Leimbach
Customer Number:	40628
Filer:	Russell Frederick Gribbell
Filer Authorized By:	
Attorney Docket Number:	SEN0523.US10
Receipt Date:	22-MAY-2023
Filing Date:	10-JAN-2022
Time Stamp:	14:24:15
Application Type:	Utility under 35 USC 111(a)

Payment information:

Submitted with Payment	no

File Listing:

Document Number	Document Description	File Name	File Size(Bytes)/ Message Digest	Multi Part /.zip	Pages (if appl.)
1		sen0523us10_amd1.pdf	56286 a6761220491c586cecff4cf118f76dfb791e4f38	yes	10

	Multipart Description/PDF files in .zip description		
	Document Description	**Start**	**End**
	Amendment/Request for Reconsideration-After Non-Final Rejection	1	1
	Claims	2	6
	Applicant Arguments/Remarks Made in an Amendment	7	10

Warnings:	
Information:	
Total Files Size (in bytes):	56286

This Acknowledgement Receipt evidences receipt on the noted date by the USPTO of the indicated documents, characterized by the applicant, and including page counts, where applicable. It serves as evidence of receipt similar to a Post Card, as described in MPEP 503.

New Applications Under 35 U.S.C. 111
If a new application is being filed and the application includes the necessary components for a filing date (see 37 CFR 1.53(b)-(d) and MPEP 506), a Filing Receipt (37 CFR 1.54) will be issued in due course and the date shown on this Acknowledgement Receipt will establish the filing date of the application.
National Stage of an International Application under 35 U.S.C. 371
If a timely submission to enter the national stage of an international application is compliant with the conditions of 35 U.S.C. 371 and other applicable requirements a Form PCT/DO/EO/903 indicating acceptance of the application as a national stage submission under 35 U.S.C. 371 will be issued in addition to the Filing Receipt, in due course.
New International Application Filed with the USPTO as a Receiving Office
If a new international application is being filed and the international application includes the necessary components for an international filing date (see PCT Article 11 and MPEP 1810), a Notification of the International Application Number and of the International Filing Date (Form PCT/RO/105) will be issued in due course, subject to prescriptions concerning national security, and the date shown on this Acknowledgement Receipt will establish the international filing date of the application.

Search Notes	Application/Control No.	Applicant(s)/Patent Under Reexamination
	17/571,811	Leimbach et al.
	Examiner	**Art Unit**
	MICHELLE LOPEZ	3731

CPC - Searched*		
Symbol	**Date**	**Examiner**
B25C1/047 OR B25C1/041 OR B25C1/06 OR B25C5/13 OR B25C1/04		

CPC Combination Sets - Searched*		
Symbol	**Date**	**Examiner**

US Classification - Searched*			
Class	**Subclass**	**Date**	**Examiner**
227	8,130	02/20/2023	ml

* See search history printout included with this form or the SEARCH NOTES box below to determine the scope of the search.

Search Notes		
Search Notes	**Date**	**Examiner**
Inventors name search; IDs review; text search combined with CPC	02/20/2023	ml
Text-limited CPC search	08/08/2023	ml
interference text search	08/08/2023	ml

Interference Search			
US Class/CPC Symbol	**US Subclass/CPC Group**	**Date**	**Examiner**
all as above	all as above	08/08/2023	ml

/MICHELLE LOPEZ/ Primary Examiner, Art Unit 3731	

Koki Holdings America Ltd.
Ex. 1002, p. 314

Issue Classification	Application/Control No.	Applicant(s)/Patent Under Reexamination
	17/571,811	Leimbach et al.
	Examiner	**Art Unit**
	MICHELLE LOPEZ	3731

CPC						
Symbol					**Type**	**Version**
B25C	/	1	/	047	F	2013-01-01
B25C	/	1	/	06	I	2013-01-01
B25C	/	1	/	041	I	2013-01-01
B25C	/	5	/	13	I	2013-01-01
B25C	/	1	/	04	A	2013-01-01

CPC Combination Sets								
Symbol					**Type**	**Set**	**Ranking**	**Version**
	/		/					

NONE (Assistant Examiner)	(Date)	**Total Claims Allowed:** 15	
/MICHELLE LOPEZ/ Primary Examiner, Art Unit 3731 (Primary Examiner)	08 August 2023 (Date)	O.G. Print Claim(s) 1	O.G. Print Figure 5

U.S. Patent and Trademark Office

Part of Paper No.: 20230808

Koki Holdings America Ltd.
Ex. 1002, p. 315

Issue Classification	Application/Control No.	Applicant(s)/Patent Under Reexamination
	17/571,811	Leimbach et al.
	Examiner	**Art Unit**
	MICHELLE LOPEZ	3731

INTERNATIONAL CLASSIFICATION				
CLAIMED				
B25C1/04	/	1	/	04

NON-CLAIMED				
	/		/	

US ORIGINAL CLASSIFICATION	
CLASS	**SUBCLASS**

CROSS REFERENCES(S)						
CLASS	**SUBCLASS (ONE SUBCLASS PER BLOCK)**					

NONE (Assistant Examiner)	(Date)	**Total Claims Allowed:** 15	
/MICHELLE LOPEZ/ Primary Examiner, Art Unit 3731 (Primary Examiner)	08 August 2023 (Date)	O.G. Print Claim(s) 1	O.G. Print Figure 5

U.S. Patent and Trademark Office

Part of Paper No.: 20230808

Issue Classification	Application/Control No.	Applicant(s)/Patent Under Reexamination
	17/571,811	Leimbach et al.
	Examiner	**Art Unit**
	MICHELLE LOPEZ	3731

☐ Claims renumbered in the same order as presented by applicant ☐ CPA ☐ T.D. ☐ R.1.47

CLAIMS

Final	Original	Final	Original	Final	Original	Final	Original	Final	Original	Final	Original	Final	Original	Final	Original
1	1	11	10												
2	2	12	11												
3	3	13	12												
4	4	14	13												
6	5	15	14												
7	6	5	15												
8	7														
9	8														
10	9														

NONE (Assistant Examiner)	(Date)	**Total Claims Allowed:** 15	
/MICHELLE LOPEZ/ Primary Examiner, Art Unit 3731 (Primary Examiner)	08 August 2023 (Date)	O.G. Print Claim(s) 1	O.G. Print Figure 5

U.S. Patent and Trademark Office

Part of Paper No.: 20230808

Bibliographic Data

Application No: 17/571,811

Foreign Priority claimed: ○ Yes ◉ No

35 USC 119 (a-d) conditions met: ☐ Yes ☑ No ☐ Met After Allowance

Verified and Acknowledged: /MICHELLE LOPEZ/ (Examiner's Signature) | ml (Initials)

Title: FASTENER DRIVING TOOL USING A GAS SPRING

FILING or 371(c) DATE	CLASS	GROUP ART UNIT	ATTORNEY DOCKET NO.
01/10/2022 **RULE**	227	3731	SEN0523.US10

APPLICANTS

Kyocera Senco Industrial Tools, Inc., Cincinnati, OH, UNITED STATES

INVENTORS

Richard L. Leimbach, Cincinnati, OH, UNITED STATES

Thomas A. McCardle, Cincinnati, OH, UNITED STATES

Danny L. Bolender, Sardinia, OH, UNITED STATES

Steve Dickinson, Cincinnati, OH, UNITED STATES

Joseph R. Knueven, Cincinnati, OH, UNITED STATES

Robert L. Lance JR., Midland, OH, UNITED STATES

Dan Stoltz, Sardinia, OH, UNITED STATES

Michael V. Petrocelli, Bethel, OH, UNITED STATES

CONTINUING DATA

This application is a CON of 16398944 04/30/2019 PAT 11241776

16398944 is a CON of 15583202 05/01/2017 PAT 10478954

15583202 is a CON of 14077313 11/12/2013 PAT 9676088

14077313 is a DIV of 13770481 02/19/2013 PAT 8602282

13770481 is a CON of 12913049 10/27/2010 PAT 8387718

12913049 is a DIV of 12243693 10/01/2008 PAT 8011441

12243693 has PRO of 60977678 10/05/2007

FOREIGN APPLICATIONS

IF REQUIRED, FOREIGN LICENSE GRANTED**

01/20/2022

STATE OR COUNTRY

UNITED STATES

ADDRESS

Frederick H. Gribbell, LLC
5515 Timber Way Drive
Cincinnati, OH 45238
UNITED STATES

FILING FEE RECEIVED

$1,820

PE2E SEARCH - Search History (Prior Art)

Ref #	Hits	Search Query	DBs	Default Operator	Plurals	British Equivalents	Time Stamp
L55	61	(gas adj3 spring) AND ((above OR high OR higher) near5(atmospheric adj3 pressure)) SAME (pressurized adj3 gas) AND piston AND cylinder	(US-PGPUB; USPAT; FIT (WO); DERWENT)	OR	ON	ON	2023/08/08 11:36 PM

PE2E SEARCH - Search History (Interference)

There are no Interference searches to show.

Koki Holdings America Ltd.
Ex. 1002, p. 320

PE2E SEARCH - Search History (Prior Art)

Ref #	Hits	Search Query	DBs	Default Operator	Plurals	British Equivalents	Time Stamp
L20	10214	(B25C1/047 OR B25C1/041 OR B25C1/06 OR B25C5/13 OR B25C1/04).CPC.	(US-PGPUB; USPAT; USOCR; FIT (WO); FPRS; EPO; JPO; DERWENT; IBM_TDB)	OR	ON	ON	2023/02/20 02:22 PM
L21	1286	L20 AND piston AND cylinder AND air AND spring	(US-PGPUB; USPAT; USOCR; FIT (WO); FPRS; EPO; JPO; DERWENT; IBM_TDB)	OR	ON	ON	2023/02/20 02:22 PM
L25	531	((above OR high OR higher) near5(atmospheric adj3 pressure)) SAME (pressurized adj3 gas) AND piston	(US-PGPUB; USPAT; FIT (WO); DERWENT)	OR	ON	ON	2023/08/07 11:56 AM
L26	387	((above OR high OR higher) near5(atmospheric adj3 pressure)) SAME (pressurized adj3 gas) AND piston AND cylinder	(US-PGPUB; USPAT; FIT (WO); DERWENT)	OR	ON	ON	2023/08/07 11:57 AM
L31	2143	(gas adj3 chamber) WITH damper	(US-PGPUB; USPAT; FIT (WO); DERWENT)	OR	ON	ON	2023/08/07 12:50 PM
L32	1148	L31 AND piston	(US-PGPUB; USPAT; FIT (WO); DERWENT)	OR	ON	ON	2023/08/07 12:50 PM
L33	127	L31 AND piston AND (gun OR tool)	(US-PGPUB; USPAT; FIT (WO); DERWENT)	OR	ON	ON	2023/08/07 12:52 PM
L52	4331	(B25c1/047 OR B25C1/041 OR B25C1/06 OR B25C5/13 OR B25C1/04).cpc.	(US-PGPUB; USPAT; FIT (WO); DERWENT)	OR	ON	ON	2023/08/08 11:23 PM
L54	17	L52 AND ((above OR high OR higher) near5(atmospheric adj3 pressure)) SAME (pressurized adj3 gas) AND piston AND cylinder	(US-PGPUB; USPAT; FIT (WO); DERWENT)	OR	ON	ON	2023/08/08 11:25 PM

PE2E SEARCH - Search History (Interference)

There are no Interference searches to show.

Koki Holdings America Ltd.
Ex. 1002, p. 321

UNITED STATES PATENT AND TRADEMARK OFFICE

UNITED STATES DEPARTMENT OF COMMERCE
United States Patent and Trademark Office
Address: COMMISSIONER FOR PATENTS
P.O. Box 1450
Alexandria, Virginia 22313-1450
www.uspto.gov

NOTICE OF ALLOWANCE AND FEE(S) DUE

40628 7590 08/09/2023
Frederick H. Gribbell, LLC
5515 Timber Way Drive
Cincinnati, OH 45238

EXAMINER
LOPEZ, MICHELLE

ART UNIT	PAPER NUMBER
3731	

DATE MAILED: 08/09/2023

APPLICATION NO.	FILING DATE	FIRST NAMED INVENTOR	ATTORNEY DOCKET NO.	CONFIRMATION NO.
17/571,811	01/10/2022	Richard L. Leimbach	SEN0523.US10	1007

TITLE OF INVENTION: FASTENER DRIVING TOOL USING A GAS SPRING

APPLN. TYPE	ENTITY STATUS	ISSUE FEE DUE	PUBLICATION FEE DUE	PREV. PAID ISSUE FEE	TOTAL FEE(S) DUE	DATE DUE
nonprovisional	UNDISCOUNTED	$1200	$0.00	$0.00	$1200	11/09/2023

THE APPLICATION IDENTIFIED ABOVE HAS BEEN EXAMINED AND IS ALLOWED FOR ISSUANCE AS A PATENT. PROSECUTION ON THE MERITS IS CLOSED. THIS NOTICE OF ALLOWANCE IS NOT A GRANT OF PATENT RIGHTS. THIS APPLICATION IS SUBJECT TO WITHDRAWAL FROM ISSUE AT THE INITIATIVE OF THE OFFICE OR UPON PETITION BY THE APPLICANT. SEE 37 CFR 1.313 AND MPEP 1308.

THE ISSUE FEE AND PUBLICATION FEE (IF REQUIRED) MUST BE PAID WITHIN THREE MONTHS FROM THE MAILING DATE OF THIS NOTICE OR THIS APPLICATION SHALL BE REGARDED AS ABANDONED. THIS STATUTORY PERIOD CANNOT BE EXTENDED. SEE 35 U.S.C. 151. THE ISSUE FEE DUE INDICATED ABOVE DOES NOT REFLECT A CREDIT FOR ANY PREVIOUSLY PAID ISSUE FEE IN THIS APPLICATION. IF AN ISSUE FEE HAS PREVIOUSLY BEEN PAID IN THIS APPLICATION (AS SHOWN ABOVE), THE RETURN OF PART B OF THIS FORM WILL BE CONSIDERED A REQUEST TO REAPPLY THE PREVIOUSLY PAID ISSUE FEE TOWARD THE ISSUE FEE NOW DUE.

HOW TO REPLY TO THIS NOTICE:

I. Review the ENTITY STATUS shown above. If the ENTITY STATUS is shown as SMALL or MICRO, verify whether entitlement to that entity status still applies.

If the ENTITY STATUS is the same as shown above, pay the TOTAL FEE(S) DUE shown above.

If the ENTITY STATUS is changed from that shown above, on PART B - FEE(S) TRANSMITTAL, complete section number 5 titled "Change in Entity Status (from status indicated above)".

For purposes of this notice, small entity fees are 40% the amount of undiscounted fees, and micro entity fees are 20% the amount of undiscounted fees.

II. PART B - FEE(S) TRANSMITTAL, or its equivalent, must be completed and returned to the United States Patent and Trademark Office (USPTO) with your ISSUE FEE and PUBLICATION FEE (if required). If you are charging the fee(s) to your deposit account, section "4b" of Part B - Fee(s) Transmittal should be completed. If an equivalent of Part B is filed, a request to reapply a previously paid issue fee must be clearly made, and delays in processing may occur due to the difficulty in recognizing the paper as an equivalent of Part B.

III. All communications regarding this application must give the application number. Please direct all communications prior to issuance to Mail Stop ISSUE FEE unless advised to the contrary.

IMPORTANT REMINDER: Maintenance fees are due in utility patents issuing on applications filed on or after Dec. 12, 1980. It is patentee's responsibility to ensure timely payment of maintenance fees when due. More information is available at www.uspto.gov/PatentMaintenanceFees.

Koki Holdings America Ltd.
Ex. 1002, p. 322

PART B - FEE(S) TRANSMITTAL

Complete and send this form, together with applicable fee(s), by mail or fax, or via EFS-Web.

By mail, send to: Mail Stop ISSUE FEE
Commissioner for Patents
P.O. Box 1450
Alexandria, Virginia 22313-1450

By fax, send to: (571)-273-2885

INSTRUCTIONS: This form should be used for transmitting the ISSUE FEE and PUBLICATION FEE (if required). Blocks 1 through 5 should be completed where appropriate. All further correspondence will be mailed to the current correspondence address as indicated unless corrected below or directed otherwise in Block 1, by (a) specifying a new correspondence address; and/or (b) indicating a separate "FEE ADDRESS" for maintenance fee notifications. **Because electronic patent issuance may occur shortly after issue fee payment, any desired continuing application should preferably be filed prior to payment of this issue fee in order not to jeopardize copendency.**

CURRENT CORRESPONDENCE ADDRESS (Note: Use Block 1 for any change of address)

40628 7590 08/09/2023
Frederick H. Gribbell, LLC
5515 Timber Way Drive
Cincinnati, OH 45238

Note: A certificate of mailing can only be used for domestic mailings of the Fee(s) Transmittal. This certificate cannot be used for any other accompanying papers. Each additional paper, such as an assignment or formal drawing, must have its own certificate of mailing or transmission.

Certificate of Mailing or Transmission

I hereby certify that this Fee(s) Transmittal is being deposited with the United States Postal Service with sufficient postage for first class mail in an envelope addressed to the Mail Stop ISSUE FEE address above, or being transmitted to the USPTO via EFS-Web or by facsimile to (571) 273-2885, on the date below.

(Typed or printed name)

(Signature)

(Date)

APPLICATION NO.	FILING DATE	FIRST NAMED INVENTOR	ATTORNEY DOCKET NO.	CONFIRMATION NO.
17/571,811	01/10/2022	Richard L. Leimbach	SEN0523.US10	1007

TITLE OF INVENTION: FASTENER DRIVING TOOL USING A GAS SPRING

APPLN. TYPE	ENTITY STATUS	ISSUE FEE DUE	PUBLICATION FEE DUE	PREV. PAID ISSUE FEE	TOTAL FEE(S) DUE	DATE DUE
nonprovisional	UNDISCOUNTED	$1200	$0.00	$0.00	$1200	11/09/2023

EXAMINER	ART UNIT	CLASS-SUBCLASS
LOPEZ, MICHELLE	3731	227-130000

1. Change of correspondence address or indication of "Fee Address" (37 CFR 1.363).

❑ Change of correspondence address (or Change of Correspondence Address form PTO/AIA/122 or PTO/SB/122) attached.

❑ "Fee Address" indication (or "Fee Address" Indication form PTO/AIA/47 or PTO/SB/47; Rev 03-02 or more recent) attached. **Use of a Customer Number is required.**

2. For printing on the patent front page, list
(1) The names of up to 3 registered patent attorneys or agents OR, alternatively,
(2) The name of a single firm (having as a member a registered attorney or agent) and the names of up to 2 registered patent attorneys or agents. If no name is listed, no name will be printed.

1_____
2_____
3_____

3. ASSIGNEE NAME AND RESIDENCE DATA TO BE PRINTED ON THE PATENT (print or type)

PLEASE NOTE: Unless an assignee is identified below, no assignee data will appear on the patent. If an assignee is identified below, the document must have been previously recorded, or filed for recordation, as set forth in 37 CFR 3.11 and 37 CFR 3.81(a). Completion of this form is NOT a substitute for filing an assignment.

(A) NAME OF ASSIGNEE (B) RESIDENCE: (CITY and STATE OR COUNTRY)

Please check the appropriate assignee category or categories (will not be printed on the patent) : ❑ Individual ❑ Corporation or other private group entity ❑ Government

4a. Fees submitted: ❑Issue Fee ❑Publication Fee (if required)

4b. Method of Payment: *(Please first reapply any previously paid fee shown above)*

❑ Electronic Payment via Patent Center or EFS-Web ❑ Enclosed check ❑ Non-electronic payment by credit card (Attach form PTO-2038)

❑ The Director is hereby authorized to charge the required fee(s), any deficiency, or credit any overpayment to Deposit Account No. _____

5. **Change in Entity Status** (from status indicated above)

❑ Applicant certifying micro entity status. See 37 CFR 1.29

❑ Applicant asserting small entity status. See 37 CFR 1.27

❑ Applicant changing to regular undiscounted fee status.

NOTE: Absent a valid certification of Micro Entity Status (see forms PTO/SB/15A and 15B), issue fee payment in the micro entity amount will not be accepted at the risk of application abandonment.

NOTE: If the application was previously under micro entity status, checking this box will be taken to be a notification of loss of entitlement to micro entity status.

NOTE: Checking this box will be taken to be a notification of loss of entitlement to small or micro entity status, as applicable.

NOTE: This form must be signed in accordance with 37 CFR 1.31 and 1.33. See 37 CFR 1.4 for signature requirements and certifications.

Authorized Signature _____ Date _____

Typed or printed name _____ Registration No. _____

Koki Holdings America Ltd.
Ex. 1002, p. 323

UNITED STATES DEPARTMENT OF COMMERCE
United States Patent and Trademark Office
Address: COMMISSIONER FOR PATENTS
P.O. Box 1450
Alexandria, Virginia 22313-1450
www.uspto.gov

APPLICATION NO.	FILING DATE	FIRST NAMED INVENTOR	ATTORNEY DOCKET NO.	CONFIRMATION NO.
17/571,811	01/10/2022	Richard L. Leimbach	SEN0523.US10	1007

40628 7590 08/09/2023
Frederick H. Gribbell, LLC
5515 Timber Way Drive
Cincinnati, OH 45238

EXAMINER
LOPEZ, MICHELLE

ART UNIT	PAPER NUMBER
3731	

DATE MAILED: 08/09/2023

Determination of Patent Term Adjustment under 35 U.S.C. 154 (b)
(Applications filed on or after May 29, 2000)

The Office has discontinued providing a Patent Term Adjustment (PTA) calculation with the Notice of Allowance.

Section 1(h)(2) of the AIA Technical Corrections Act amended 35 U.S.C. 154(b)(3)(B)(i) to eliminate the requirement that the Office provide a patent term adjustment determination with the notice of allowance. See Revisions to Patent Term Adjustment, 78 Fed. Reg. 19416, 19417 (Apr. 1, 2013). Therefore, the Office is no longer providing an initial patent term adjustment determination with the notice of allowance. The Office will continue to provide a patent term adjustment determination with the Issue Notification Letter that is mailed to applicant approximately three weeks prior to the issue date of the patent, and will include the patent term adjustment on the patent. Any request for reconsideration of the patent term adjustment determination (or reinstatement of patent term adjustment) should follow the process outlined in 37 CFR 1.705.

Any questions regarding the Patent Term Extension or Adjustment determination should be directed to the Office of Patent Legal Administration at (571)-272-7702. Questions relating to issue and publication fee payments should be directed to the Customer Service Center of the Office of Patent Publication at 1-(888)-786-0101 or (571)-272-4200.

OMB Clearance and PRA Burden Statement for PTOL-85 Part B

The Paperwork Reduction Act (PRA) of 1995 requires Federal agencies to obtain Office of Management and Budget approval before requesting most types of information from the public. When OMB approves an agency request to collect information from the public, OMB (i) provides a valid OMB Control Number and expiration date for the agency to display on the instrument that will be used to collect the information and (ii) requires the agency to inform the public about the OMB Control Number's legal significance in accordance with 5 CFR 1320.5(b).

The information collected by PTOL-85 Part B is required by 37 CFR 1.311. The information is required to obtain or retain a benefit by the public which is to file (and by the USPTO to process) an application. Confidentiality is governed by 35 U.S.C. 122 and 37 CFR 1.14. This collection is estimated to take 30 minutes to complete, including gathering, preparing, and submitting the completed application form to the USPTO. Time will vary depending upon the individual case. Any comments on the amount of time you require to complete this form and/or suggestions for reducing this burden, should be sent to the Chief Information Officer, U.S. Patent and Trademark Office, U.S. Department of Commerce, P.O. Box 1450, Alexandria, Virginia 22313-1450. DO NOT SEND FEES OR COMPLETED FORMS TO THIS ADDRESS. SEND TO: Commissioner for Patents, P.O. Box 1450, Alexandria, Virginia 22313-1450. Under the Paperwork Reduction Act of 1995, no persons are required to respond to a collection of information unless it displays a valid OMB control number.

Privacy Act Statement

The Privacy Act of 1974 (P.L. 93-579) requires that you be given certain information in connection with your submission of the attached form related to a patent application or patent. Accordingly, pursuant to the requirements of the Act, please be advised that: (1) the general authority for the collection of this information is 35 U.S.C. 2(b)(2); (2) furnishing of the information solicited is voluntary; and (3) the principal purpose for which the information is used by the U.S. Patent and Trademark Office is to process and/or examine your submission related to a patent application or patent. If you do not furnish the requested information, the U.S. Patent and Trademark Office may not be able to process and/or examine your submission, which may result in termination of proceedings or abandonment of the application or expiration of the patent.

The information provided by you in this form will be subject to the following routine uses:

1. The information on this form will be treated confidentially to the extent allowed under the Freedom of Information Act (5 U.S.C. 552) and the Privacy Act (5 U.S.C 552a). Records from this system of records may be disclosed to the Department of Justice to determine whether disclosure of these records is required by the Freedom of Information Act.
2. A record from this system of records may be disclosed, as a routine use, in the course of presenting evidence to a court, magistrate, or administrative tribunal, including disclosures to opposing counsel in the course of settlement negotiations.
3. A record in this system of records may be disclosed, as a routine use, to a Member of Congress submitting a request involving an individual, to whom the record pertains, when the individual has requested assistance from the Member with respect to the subject matter of the record.
4. A record in this system of records may be disclosed, as a routine use, to a contractor of the Agency having need for the information in order to perform a contract. Recipients of information shall be required to comply with the requirements of the Privacy Act of 1974, as amended, pursuant to 5 U.S.C. 552a(m).
5. A record related to an International Application filed under the Patent Cooperation Treaty in this system of records may be disclosed, as a routine use, to the International Bureau of the World Intellectual Property Organization, pursuant to the Patent Cooperation Treaty.
6. A record in this system of records may be disclosed, as a routine use, to another federal agency for purposes of National Security review (35 U.S.C. 181) and for review pursuant to the Atomic Energy Act (42 U.S.C. 218(c)).
7. A record from this system of records may be disclosed, as a routine use, to the Administrator, General Services, or his/her designee, during an inspection of records conducted by GSA as part of that agency's responsibility to recommend improvements in records management practices and programs, under authority of 44 U.S.C. 2904 and 2906. Such disclosure shall be made in accordance with the GSA regulations governing inspection of records for this purpose, and any other relevant (i.e., GSA or Commerce) directive. Such disclosure shall not be used to make determinations about individuals.
8. A record from this system of records may be disclosed, as a routine use, to the public after either publication of the application pursuant to 35 U.S.C. 122(b) or issuance of a patent pursuant to 35 U.S.C. 151. Further, a record may be disclosed, subject to the limitations of 37 CFR 1.14, as a routine use, to the public if the record was filed in an application which became abandoned or in which the proceedings were terminated and which application is referenced by either a published application, an application open to public inspection or an issued patent.
9. A record from this system of records may be disclosed, as a routine use, to a Federal, State, or local law enforcement agency, if the USPTO becomes aware of a violation or potential violation of law or regulation.

Notice of Allowability	Application No. 17/571,811	Applicant(s) Leimbach et al.	
	Examiner MICHELLE LOPEZ	Art Unit 3731	AIA (FITF) Status No

-- The MAILING DATE of this communication appears on the cover sheet with the correspondence address--

All claims being allowable, PROSECUTION ON THE MERITS IS (OR REMAINS) CLOSED in this application. If not included herewith (or previously mailed), a Notice of Allowance (PTOL-85) or other appropriate communication will be mailed in due course. **THIS NOTICE OF ALLOWABILITY IS NOT A GRANT OF PATENT RIGHTS.** This application is subject to withdrawal from issue at the initiative of the Office or upon petition by the applicant. See 37 CFR 1.313 and MPEP 1308.

1. ☑ This communication is responsive to the amendment filed on 05/22/23.
   ☐ A declaration(s)/affidavit(s) under **37 CFR 1.130(b)** was/were filed on _____.

2. ☐ An election was made by the applicant in response to a restriction requirement set forth during the interview on _____; the restriction requirement and election have been incorporated into this action.

3. ☑ The allowed claim(s) is/are 1-15 . As a result of the allowed claim(s), you may be eligible to benefit from the **Patent Prosecution Highway** program at a participating intellectual property office for the corresponding application. For more information, please see **http://www.uspto.gov/patents/init_events/pph/index.jsp** or send an inquiry to **PPHfeedback@uspto.gov.**

4. ☐ Acknowledgment is made of a claim for foreign priority under 35 U.S.C. § 119(a)-(d) or (f).

   Certified copies:

   a) ☐ All b) ☐ Some* c) ☐ None of the:

   1. ☐ Certified copies of the priority documents have been received.
   2. ☐ Certified copies of the priority documents have been received in Application No. _____ .
   3. ☐ Copies of the certified copies of the priority documents have been received in this national stage application from the International Bureau (PCT Rule 17.2(a)).

   * Certified copies not received: _____ .

Applicant has THREE MONTHS FROM THE "MAILING DATE" of this communication to file a reply complying with the requirements noted below. Failure to timely comply will result in ABANDONMENT of this application.
THIS THREE-MONTH PERIOD IS NOT EXTENDABLE.

5. ☐ CORRECTED DRAWINGS (as "replacement sheets") must be submitted.
   ☐ including changes required by the attached Examiner's Amendment / Comment or in the Office action of Paper No./Mail Date _____ .

   Identifying indicia such as the application number (see 37 CFR 1.84(c)) should be written on the drawings in the front (not the back) of each sheet. Replacement sheet(s) should be labeled as such in the header according to 37 CFR 1.121(d).

6. ☐ DEPOSIT OF and/or INFORMATION about the deposit of BIOLOGICAL MATERIAL must be submitted. Note the attached Examiner's comment regarding REQUIREMENT FOR THE DEPOSIT OF BIOLOGICAL MATERIAL.

Attachment(s)

1. ☐ Notice of References Cited (PTO-892)
2. ☐ Information Disclosure Statements (PTO/SB/08), Paper No./Mail Date _____.
3. ☐ Examiner's Comment Regarding Requirement for Deposit of Biological Material _____.
4. ☐ Interview Summary (PTO-413), Paper No./Mail Date. _____.
5. ☑ Examiner's Amendment/Comment
6. ☑ Examiner's Statement of Reasons for Allowance
7. ☐ Other _____.

/MICHELLE LOPEZ/
Primary Examiner, Art Unit 3731

Koki Holdings America Ltd.
Ex. 1002, p. 326

Notice of Pre-AIA or AIA Status

1. The present application is being examined under the pre-AIA first to invent provisions.

2. This action is in response to the amendment filed on 05/22/23.

3. Claims 1-15 are pending and have been examined.

Reasons for allowance

4. The following is a statement of reasons for the indication of allowable subject matter: The prior art does not disclose or make obvious the claimed combination including the following features:

- a housing with a storage chamber that contains a pressurized gas that is always above atmospheric pressure: a hollow cylinder that includes a movable piston; said storage chamber being in fluidic communication with a first end of said hollow cylinder; and said storage chamber including a removable top cap at a location proximal to said first end of said hollow cylinder; wherein: said piston has a rest position between operational cycles proximal to a higher pressure position; and said pressurized gas is not vented to atmosphere after said drive stroke;
- a guide body that is located proximal to said hollow cylinder, and having a linear passageway for said driver, and having an exit end that is located distal from said hollow cylinder; and a safety contact element proximal to said exit end, said safety contact element being disposed at a front portion of the tool, above said guide body.

It is the pressurized gas that is always above atmospheric pressure, wherein said piston has a rest position between operational cycles proximal to a higher pressure position; said pressurized gas is not vented to atmosphere after said drive stroke; and, a safety contact element proximal to said exit end, said safety contact element being disposed at a front portion of the tool, above said guide body in combination with the other claimed elements of the device that are novel over the prior art of record.

The combinations of the claimed limitations are novel and found to be allowable over prior art. The cited references taken singly or in combination do not anticipate or make obvious the Applicant's claimed invention.

Any comments considered necessary by applicant must be submitted no later than the payment of the issue fee and, to avoid processing delays, should preferably accompany the issue fee. Such submissions should be clearly labeled "Comments on Statement of Reasons for Allowance."

Conclusion

4. Any inquiry concerning this communication or earlier communications from the examiner should be directed to MICHELLE LOPEZ whose telephone number is (571)272-4464. The examiner can normally be reached Monday thru Friday 8:30 am to 4:30 pm.

Examiner interviews are available via telephone, in-person, and video conferencing using a USPTO supplied web-based collaboration tool. To schedule an interview, applicant is encouraged to use the USPTO Automated Interview Request (AIR) at http://www.uspto.gov/interviewpractice.

If attempts to reach the examiner by telephone are unsuccessful, the examiner's supervisor, Anna Kinsaul can be reached on (571) 270 - 1926. The fax phone number for the organization where this application or proceeding is assigned is 571-273-8300.

Information regarding the status of published or unpublished applications may be obtained from Patent Center. Unpublished application information in Patent Center is available to registered users. To file and manage patent submissions in Patent Center, visit: https://patentcenter.uspto.gov. Visit https://www.uspto.gov/patents/apply/patent-center for more information about Patent Center and https://www.uspto.gov/patents/docx for information about filing in DOCX format. For additional questions, contact the Electronic Business Center (EBC) at 866-217-9197 (toll-free). If you would like assistance from a USPTO Customer Service Representative, call 800-786-9199 (IN USA OR CANADA) or 571-272-1000.

/MICHELLE LOPEZ/
Primary Examiner, Art Unit 3731

UNITED STATES PATENT AND TRADEMARK OFFICE

UNITED STATES DEPARTMENT OF COMMERCE
United States Patent and Trademark Office
Address: COMMISSIONER FOR PATENTS
P.O. Box 1450
Alexandria, Virginia 22313-1450
www.uspto.gov

APPLICATION NUMBER	FILING or 371(c) DATE	GRP ART UNIT	FIL FEE REC'D	ATTY.DOCKET.NO	TOT CLAIMS	IND CLAIMS
17/571,811	01/10/2022	3731	1820	SEN0523.US10	14	3

CONFIRMATION NO. 1007

REPLACEMENT FILING RECEIPT

OC000000060787995

40628
Frederick H. Gribbell, LLC
5515 Timber Way Drive
Cincinnati, OH 45238

Date Mailed: 08/21/2023

Receipt is acknowledged of this non-provisional utility patent application. The application will be taken up for examination in due course. Applicant will be notified as to the results of the examination. Any correspondence concerning the application must include the following identification information: the U.S. APPLICATION NUMBER, FILING DATE, NAME OF FIRST INVENTOR, and TITLE OF INVENTION. Fees transmitted by check or draft are subject to collection.

Please verify the accuracy of the data presented on this receipt. If an error is noted on this Filing Receipt, please submit a written request for a corrected Filing Receipt, including a properly marked-up ADS showing the changes with strike-through for deletions and underlining for additions. If you received a "Notice to File Missing Parts" or other Notice requiring a response for this application, please submit any request for correction to this Filing Receipt with your reply to the Notice. When the USPTO processes the reply to the Notice, the USPTO will generate another Filing Receipt incorporating the requested corrections provided that the request is grantable.

Inventor(s)

Richard L. Leimbach, Cincinnati, OH;
Thomas A. McCardle, Cincinnati, OH;
Danny L. Bolender, Sardinia, OH;
Steve Dickinson, Cincinnati, OH;
Joseph R. Knueven, Cincinnati, OH;
Robert L. Lance, JR., Midland, OH;
Dan Stoltz, Sardinia, OH;
Michael V. Petrocelli, Bethel, OH, Deceased;

Applicant(s)

Kyocera Senco Industrial Tools, Inc., Cincinnati, OH;

Assignment For Published Patent Application

Kyocera Senco Industrial Tools, Inc., Cincinnati, OH

Power of Attorney: The patent practitioners associated with Customer Number 40628

Domestic Priority data as claimed by applicant

This application is a CON of 16/398,944 04/30/2019 PAT 11,241,776
which is a CON of 15/583,202 05/01/2017 PAT 10,478,954
which is a CON of 14/077,313 11/12/2013 PAT 9,676,088
which is a DIV of 13/770,481 02/19/2013 PAT 8,602,282
which is a CON of 12/913,049 10/27/2010 PAT 8,387,718
which is a DIV of 12/243,693 10/01/2008 PAT 8,011,441
which claims benefit of 60/977,678 10/05/2007

Foreign Applications for which priority is claimed (You may be eligible to benefit from the **Patent Prosecution Highway** program at the USPTO. Please see http://www.uspto.gov for more information.) - None.
Foreign application information must be provided in an Application Data Sheet in order to constitute a claim to foreign priority. See 37 CFR 1.55 and 1.76.

Permission to Access Application via Priority Document Exchange: Yes

Permission to Access Search Results: Yes

Applicant may provide or rescind an authorization for access using Form PTO/SB/39 or Form PTO/SB/69 as appropriate.

If Required, Foreign Filing License Granted: 01/20/2022

The country code and number of your priority application, to be used for filing abroad under the Paris Convention, is **US 17/571,811**

Projected Publication Date: 04/28/2022

Non-Publication Request: No

Early Publication Request: No
Title

FASTENER DRIVING TOOL USING A GAS SPRING

Preliminary Class

227

Statement under 37 CFR 1.55 or 1.78 for AIA (First Inventor to File) Transition Applications: No

PROTECTING YOUR INVENTION OUTSIDE THE UNITED STATES

Since the rights granted by a U.S. patent extend only throughout the territory of the United States and have no effect in a foreign country, an inventor who wishes patent protection in another country must apply for a patent in a specific country or in regional patent offices. Applicants may wish to consider the filing of an international application under the Patent Cooperation Treaty (PCT). An international (PCT) application generally has the same effect as a regular national patent application in each PCT-member country. The PCT process **simplifies** the filing of patent applications on the same invention in member countries, but **does not result** in a grant of "an international patent" and does not eliminate the need of applicants to file additional documents and fees in countries where patent protection is desired.

Almost every country has its own patent law, and a person desiring a patent in a particular country must make an application for patent in that country in accordance with its particular laws. Since the laws of many countries differ in various respects from the patent law of the United States, applicants are advised to seek guidance from specific foreign countries to ensure that patent rights are not lost prematurely.

Applicants also are advised that in the case of inventions made in the United States, the Director of the USPTO must issue a license before applicants can apply for a patent in a foreign country. The filing of a U.S. patent application serves as a request for a foreign filing license. The application's filing receipt contains further information and guidance as to the status of applicant's license for foreign filing.

Applicants may wish to consult the USPTO booklet, "General Information Concerning Patents" (specifically, the section entitled "Treaties and Foreign Patents") for more information on timeframes and deadlines for filing foreign patent applications. The guide is available either by contacting the USPTO Contact Center at 800-786-9199, or it can be viewed on the USPTO website at http://www.uspto.gov/web/offices/pac/doc/general/index.html.

For information on preventing theft of your intellectual property (patents, trademarks and copyrights), you may wish to consult the U.S. Government website, http://www.stopfakes.gov. Part of a Department of Commerce initiative, this website includes self-help "toolkits" giving innovators guidance on how to protect intellectual property in specific countries such as China, Korea and Mexico. For questions regarding patent enforcement issues, applicants may call the U.S. Government hotline at 1-866-999-HALT (1-866-999-4258).

LICENSE FOR FOREIGN FILING UNDER

Title 35, United States Code, Section 184

Title 37, Code of Federal Regulations, 5.11 & 5.15

GRANTED

The applicant has been granted a license under 35 U.S.C. 184, if the phrase "IF REQUIRED, FOREIGN FILING LICENSE GRANTED" followed by a date appears on this form. Such licenses are issued in all applications where the conditions for issuance of a license have been met, regardless of whether or not a license may be required as set forth in 37 CFR 5.15. The scope and limitations of this license are set forth in 37 CFR 5.15(a) unless an earlier license has been issued under 37 CFR 5.15(b). The license is subject to revocation upon written notification. The date indicated is the effective date of the license, unless an earlier license of similar scope has been granted under 37 CFR 5.13 or 5.14.

This license is to be retained by the licensee and may be used at any time on or after the effective date thereof unless it is revoked. This license is automatically transferred to any related applications(s) filed under 37 CFR 1.53(d). This license is not retroactive.

The grant of a license does not in any way lessen the responsibility of a licensee for the security of the subject matter as imposed by any Government contract or the provisions of existing laws relating to espionage and the national security or the export of technical data. Licensees should apprise themselves of current regulations especially with respect to certain countries, of other agencies, particularly the Office of Defense Trade Controls, Department of State (with respect to Arms, Munitions and Implements of War (22 CFR 121-128)); the Bureau of Industry and Security, Department of Commerce (15 CFR parts 730-774); the Office of Foreign AssetsControl, Department of Treasury (31 CFR Parts 500+) and the Department of Energy.

NOT GRANTED

No license under 35 U.S.C. 184 has been granted at this time, if the phrase "IF REQUIRED, FOREIGN FILING LICENSE GRANTED" DOES NOT appear on this form. Applicant may still petition for a license under 37 CFR 5.12, if a license is desired before the expiration of 6 months from the filing date of the application. If 6 months has lapsed from the filing date of this application and the licensee has not received any indication of a secrecy order under 35 U.S.C. 181, the licensee may foreign file the application pursuant to 37 CFR 5.15(b).

SelectUSA

The United States represents the largest, most dynamic marketplace in the world and is an unparalleled location for business investment, innovation, and commercialization of new technologies. The U.S. offers tremendous resources and advantages for those who invest and manufacture goods here. Through SelectUSA, our nation works to promote and facilitate business investment. SelectUSA provides information assistance to the international investor community; serves as an ombudsman for existing and potential investors; advocates on behalf of U.S. cities, states, and regions competing for global investment; and counsels U.S. economic development organizations on investment attraction best practices. To learn more about why the United States is the best country in the world to develop technology, manufacture products, deliver services, and grow your business, visit http://www.SelectUSA.gov or call +1-202-482-6800.

Document Description: Issue Fee Payment (PTO-85B)

Issue Fee Transmittal Form

Application Number	Filing Date	First Named Inventor	Atty. Docket No.	Confirmation No.
17571811	10-Jan-2022	Richard L. Leimbach	SEN0523.US10	1007

TITLE OF INVENTION :

FASTENER DRIVING TOOL USING A GAS SPRING

Entity Status	Application Type	Art Unit	Class - Subclass	EXAMINER
Regular Undiscounted	Utility under 35 USC 111(a)	3731	130000	MICHELLE LOPEZ

Issue Fee Due	Publication Due	Total Fee(s) Due	Date Due	Prev. Paid Fee
$1200	$0	$1200	09-Nov-2023	$0

1.Change of Correspondence Address and/or Indication Of Fee Address (37 CFR 1.33 & 1.363)

Current Correspondence Address:	Current Indicated Fee Address :
40628 Frederick H. Gribbell, LLC 5515 Timber Way Drive Cincinnati OH 45238 UNITED STATES 513-891-2100 fred.gribbell@ieee.org	
☐ Change of correspondence address requested, system generated AIA/122-EFS form attached	☐ Fee Address indication requested, system generated SB/47-EFS form attached

2.Entity Status

Change in Entity Status

○ Applicant certifying micro entity status; system generated Micro Entity certification form attached. See 37 CFR 1.29.
Note: Absent a valid certification of micro entity status, issue fee payment in the micro entity amount will not be accepted at the risk of application abandonment. If this box is checked, you will be prompted to choose a micro entity status on the gross income basis (37 CFR 1.29(a)) or the institution of higher education basis (37 CFR 1.29(d)), and make the applicable certification online.

○ Applicant asserting small entity status. See 37 CFR 1.27.
Note: If the application was previously under micro entity status, checking this box will be taken to be a notification of loss of entitlement to micro entity status.

◉ Applicant changing to regular undiscounted fee status.
Note: Checking this box will be taken to be a notification of loss of entitlement to small or micro entity status, as applicable.

Document Description: Issue Fee Payment (PTO-85B)

3.The Following Fee(s) Are Submitted:

☒ Issue Fee

☐ I authorize USPTO to apply my previously paid issue fee to the current fees due

☐ Publication Fee

☐ The Director is hereby authorized to apply my previously paid issue fee to the current fee due and to charge deficient fees to Deposit Account Number _____

☒ If **in addition to** the payment of the issue fee amount submitted with this form, there are any discrepancies in any amount(s) due, the Director is authorized to charge any deficiency, or credit any overpayment, to Deposit Account Number 502116 . The **issue fee must be submitted** with this form. **If payment of the issue fee does not accompany this form, checking this box and providing a deposit account number will NOT be effective to satisfy full payment of the fee(s) due.**

4.Firm and/or Attorney Names To Be Printed

NOTE: If no name is listed, no name will be printed
For printing on the patent front page, list to be displayed as entered

1. Frederick H. Gribbell
2. Russell F. Gribbell
3.

5.Assignee Name(s) and Residence Data To Be Printed

PLEASE NOTE: Unless an assignee is identified below, no assignee data will appear on the patent. If an assignee is identified below, the document has been filed for recordation as set forth in 37 CFR 3.11. Completion of this form is NOT a substitute for filing an assignment.

Name	City	State	Country	Category
Kyocera Senco Industrial Tools, Inc.	Cincinnati	OHIO	UNITED STATES	corporation

6.Signature

I certify, in accordance with 37 CFR 1.4(d)(4) that I am an attorney or agent registered to practice before the Patent and Trademark Office who has filed and has been granted power of attorney in this application. I also certify that this Fee(s) Transmittal form is being transmitted to the USPTO via EFS-WEB on the date indicated below.

Signature	/Russell Gribbell/	**Date**	11-08-2023
Name	Russell Frederick Gribbell	**Registration Number**	77316

Electronic Patent Application Fee Transmittal

Application Number:	17571811
Filing Date:	10-Jan-2022
Title of Invention:	FASTENER DRIVING TOOL USING A GAS SPRING
First Named Inventor/Applicant Name:	Richard L. Leimbach
Filer:	Russell Frederick Gribbell
Attorney Docket Number:	SEN0523.US10

Filed as Large Entity

Filing Fees for Utility under 35 USC 111(a)

Description	Fee Code	Quantity	Amount	Sub-Total in USD($)
Basic Filing:				
UTILITY APPL ISSUE FEE	1501	1	1200	1200
PUBL. FEE- EARLY, VOLUNTARY, OR NORMAL	1504	1	0	0
Pages:				
Claims:				
Miscellaneous-Filing:				
Petition:				
Patent-Appeals-and-Interference:				

Description	Fee Code	Quantity	Amount	Sub-Total in USD($)
Post-Allowance-and-Post-Issuance:				
Extension-of-Time:				
Miscellaneous:				
			Total in USD ($)	**1200**

Electronic Acknowledgement Receipt

EFS ID:	48808772
Application Number:	17571811
International Application Number:	
Confirmation Number:	1007
Title of Invention:	FASTENER DRIVING TOOL USING A GAS SPRING
First Named Inventor/Applicant Name:	Richard L. Leimbach
Customer Number:	40628
Filer:	Russell Frederick Gribbell
Filer Authorized By:	
Attorney Docket Number:	SEN0523.US10
Receipt Date:	08-NOV-2023
Filing Date:	10-JAN-2022
Time Stamp:	09:09:12
Application Type:	Utility under 35 USC 111(a)

Payment information:

Submitted with Payment	yes
Payment Type	CARD
Payment was successfully received in RAM	$1200
RAM confirmation Number	E2023A8009109735
Deposit Account	502116
Authorized User	Russell Gribbell

The Director of the USPTO is hereby authorized to charge indicated fees and credit any overpayment as follows:

37 CFR 1.20 (Post Issuance fees)

37 CFR 1.21 (Miscellaneous fees and charges)

File Listing:

Document Number	Document Description	File Name	File Size(Bytes)/ Message Digest	Multi Part /.zip	Pages (if appl.)
1	Issue Fee Payment (PTO-85B)	Web85b.pdf	60746 a37a5f4b4ee8cab32dc70c9e82dc9f55d7dde3a8	no	2
Warnings:					
Information:					
2	Fee Worksheet (SB06)	fee-info.pdf	40041 93a41e3c53034d2e1bdf0d69f97169f60b1ca79d	no	2
Warnings:					
Information:					
		Total Files Size (in bytes):	100787		

This Acknowledgement Receipt evidences receipt on the noted date by the USPTO of the indicated documents, characterized by the applicant, and including page counts, where applicable. It serves as evidence of receipt similar to a Post Card, as described in MPEP 503.

New Applications Under 35 U.S.C. 111
If a new application is being filed and the application includes the necessary components for a filing date (see 37 CFR 1.53(b)-(d) and MPEP 506), a Filing Receipt (37 CFR 1.54) will be issued in due course and the date shown on this Acknowledgement Receipt will establish the filing date of the application.
National Stage of an International Application under 35 U.S.C. 371
If a timely submission to enter the national stage of an international application is compliant with the conditions of 35 U.S.C. 371 and other applicable requirements a Form PCT/DO/EO/903 indicating acceptance of the application as a national stage submission under 35 U.S.C. 371 will be issued in addition to the Filing Receipt, in due course.
New International Application Filed with the USPTO as a Receiving Office
If a new international application is being filed and the international application includes the necessary components for an international filing date (see PCT Article 11 and MPEP 1810), a Notification of the International Application Number and of the International Filing Date (Form PCT/RO/105) will be issued in due course, subject to prescriptions concerning national security, and the date shown on this Acknowledgement Receipt will establish the international filing date of the application.

UNITED STATES PATENT AND TRADEMARK OFFICE

UNITED STATES DEPARTMENT OF COMMERCE
United States Patent and Trademark Office
Address: COMMISSIONER FOR PATENTS
P.O. Box 1450
Alexandria, Virginia 22313-1450
www.uspto.gov

APPLICATION NO.	ISSUE DATE	PATENT NO.	ATTORNEY DOCKET NO.	CONFIRMATION NO.
17/571,811	12/19/2023	11845167	SEN0523.US10	1007

40628 7590 11/29/2023

Frederick H. Gribbell, LLC
5515 Timber Way Drive
Cincinnati, OH 45238

ISSUE NOTIFICATION

The projected patent number and issue date are specified above. The patent will issue electronically. The electronically issued patent is the official patent grant pursuant to 35 U.S.C. § 153. The patent may be accessed on or after the issue date through Patent Center at https://patentcenter.uspto.gov/. The patent will be available in both the public and the private sides of Patent Center. Further assistance in electronically accessing the patent, or about Patent Center, is available by calling the Patent Electronic Business Center at 1-888-217-9197.

The USPTO is implementing electronic patent issuance with a transition period, during which period the USPTO will mail a ceremonial paper copy of the electronic patent grant to the correspondence address of record. Additional copies of the patent (i.e., certified and presentation copies) may be ordered for a fee from the USPTO's Certified Copy Center at https://certifiedcopycenter.uspto.gov/index.html. The Certified Copy Center may be reached at (800)972-6382.

Determination of Patent Term Adjustment under 35 U.S.C. 154 (b)
(application filed on or after May 29, 2000)

The Patent Term Adjustment is 0 day(s). Any patent to issue from the above-identified application will include an indication of the adjustment on the front page.

If a Continued Prosecution Application (CPA) was filed in the above-identified application, the filing date that determines Patent Term Adjustment is the filing date of the most recent CPA.

Applicant will be able to obtain more detailed information by accessing the Patent Center (https://patentcenter.uspto.gov).

Any questions regarding the Patent Term Extension or Adjustment determination should be directed to the Office of Patent Legal Administration at (571)-272-7702. Questions relating to issue and publication fee payments should be directed to the Application Assistance Unit (AAU) of the Office of Patents Stakeholder Experience (OPSE), Stakeholder Support Division (SSD) at (571)-272-4200.

INVENTOR(s) (Please see PATENT CENTER site https://patentcenter.uspto.gov for additional inventors):

Richard L. Leimbach, Cincinnati, OH;
Thomas A. McCardle, Cincinnati, OH;
Danny L. Bolender, Sardinia, OH;
Steve Dickinson, Cincinnati, OH;
Joseph R. Knueven, Cincinnati, OH;

APPLICANT(s) (Please see PATENT CENTER site https://patentcenter.uspto.gov for additional applicants):

Kyocera Senco Industrial Tools, Inc., Cincinnati, OH;

The United States represents the largest, most dynamic marketplace in the world and is an unparalleled location for business investment, innovation, and commercialization of new technologies. The USA offers tremendous resources and advantages for those who invest and manufacture goods here. Through SelectUSA, our nation works to encourage and facilitate business investment. To learn more about why the USA is the best country in the world to develop technology, manufacture products, and grow your business, visit SelectUSA.gov.

UNITED STATES PATENT AND TRADEMARK OFFICE

UNITED STATES DEPARTMENT OF COMMERCE
United States Patent and Trademark Office
Address: COMMISSIONER FOR PATENTS
P.O. Box 1450
Alexandria, Virginia 22313-1450
www.uspto.gov

APPLICATION NO.	FILING DATE	FIRST NAMED INVENTOR	ATTORNEY DOCKET NO.	CONFIRMATION NO.
17/571,811	01/10/2022	Richard L. Leimbach	SEN0523.US10	1007

40628 7590 12/20/2023
Frederick H. Gribbell, LLC
5515 Timber Way Drive
Cincinnati, OH 45238

EXAMINER
LOPEZ, MICHELLE

ART UNIT	PAPER NUMBER
3731	

MAIL DATE	DELIVERY MODE
12/20/2023	PAPER

Please find below and/or attached an Office communication concerning this application or proceeding.

The time period for reply, if any, is set in the attached communication.

PTOL-90A (Rev. 04/07)

UNITED STATES PATENT AND TRADEMARK OFFICE

UNITED STATES DEPARTMENT OF COMMERCE
United States Patent and Trademark Office
Address: COMMISSIONER FOR PATENTS
P.O. Box 1450
Alexandria, Virginia 22313-1450
www.uspto.gov

APPLICATION NO.	ISSUE DATE	PATENT NO.
17/571,811	19-Dec-2023	11845167

Frederick H. Gribbell, LLC
5515 Timber Way Drive
Cincinnati, OH 45238

EGRANT NOTIFICATION

Your electronic patent grant (eGrant) is now available, which can be accessed via Patent Center at https://patentcenter.uspto.gov

The electronic patent grant is the official patent grant under 35 U.S.C. 153. For more information, please visit https://www.uspto.gov/electronicgrants