United States Patent [19]

Lai

[11] **Patent Number: 4,953,774**

[45] **Date of Patent: Sep. 4, 1990**

[54] **ELECTRIC STAPLING GUN WITH AUTO-RESET, ENERGY-SAVING AND SHOCK-ABSORBING FUNCTIONS**

[75] Inventor: **Motor Lai,** Taichung-Hsien, Taiwan

[73] Assignee: **Regitar Power Tools Co., Ltd.,** Taya Taichung Hsien, Taiwan

[21] Appl. No.: **344,684**

[22] Filed: **Apr. 26, 1989**

[51] **Int. Cl.**[5] **B25C 5/15**

[52] **U.S. Cl.** **227/131;** 227/8; 227/156

[58] **Field of Search** 227/8, 131, 156

[56] **References Cited**

U.S. PATENT DOCUMENTS

4,530,454	7/1985	Gloor et al.	227/131 X
4,618,087	10/1986	Lai	227/131
4,640,452	2/1987	Matt et al.	227/131
4,807,793	2/1989	Ghibely	227/131
4,811,885	3/1989	Lai	227/131
4,834,278	5/1989	Lin	227/131 X

Primary Examiner—Paul A. Bell

Attorney, Agent, or Firm—Morton J. Rosenberg; David I. Klein

[57] **ABSTRACT**

This invention relates to an electric stapling gun with auto-reset, energy-saving and shock-absorbing functions and in particular to one utilizing a lobe of a cam to press a second link rod to turn on a micro-switch once again so as to avoid the dead point of a prior art stapling gun. Further, a spring with different pitches at both ends is used to reduce the work required for producing same momentum on a staple in comparison with the prior art thereby saving energy. In addition, the stapling gun is provided a metallic protective ferrule for keeping the housing of the stapling gun from being damaged.

1 Claim, 9 Drawing Sheets

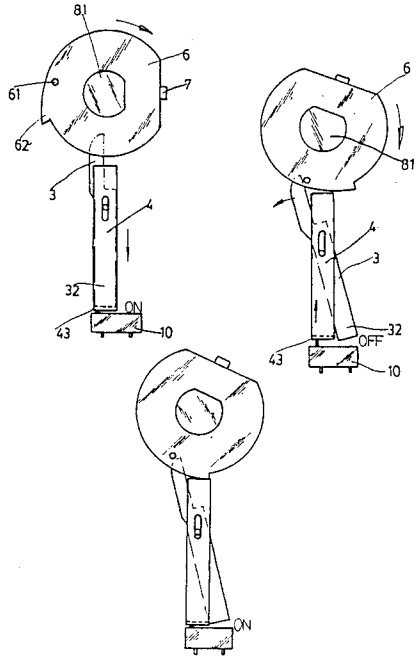

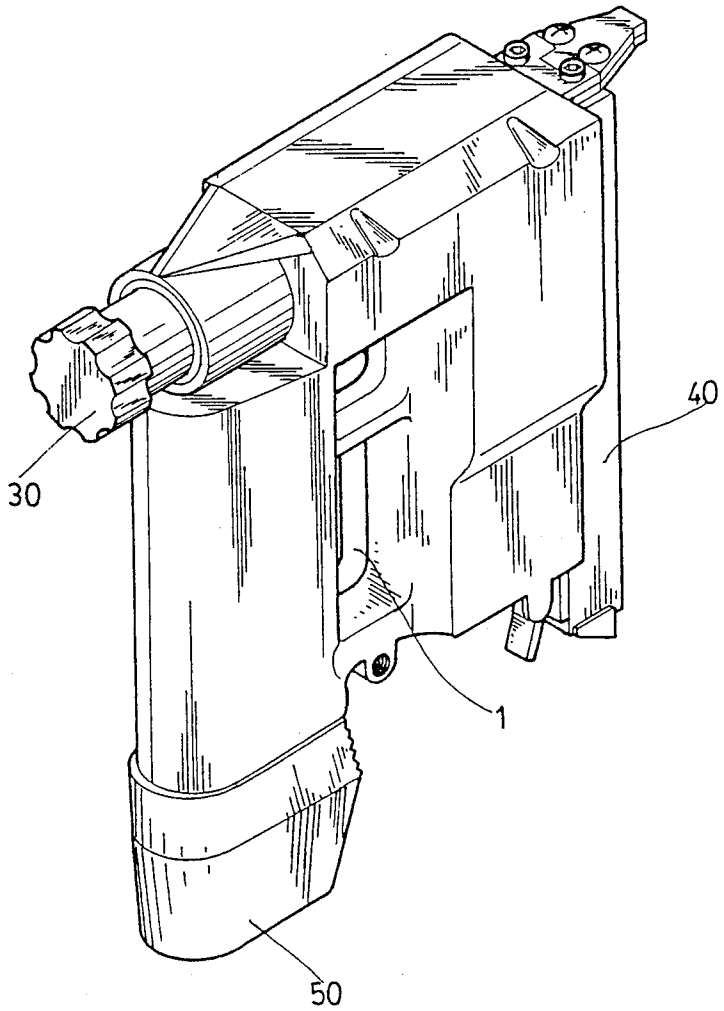

FIG. 1

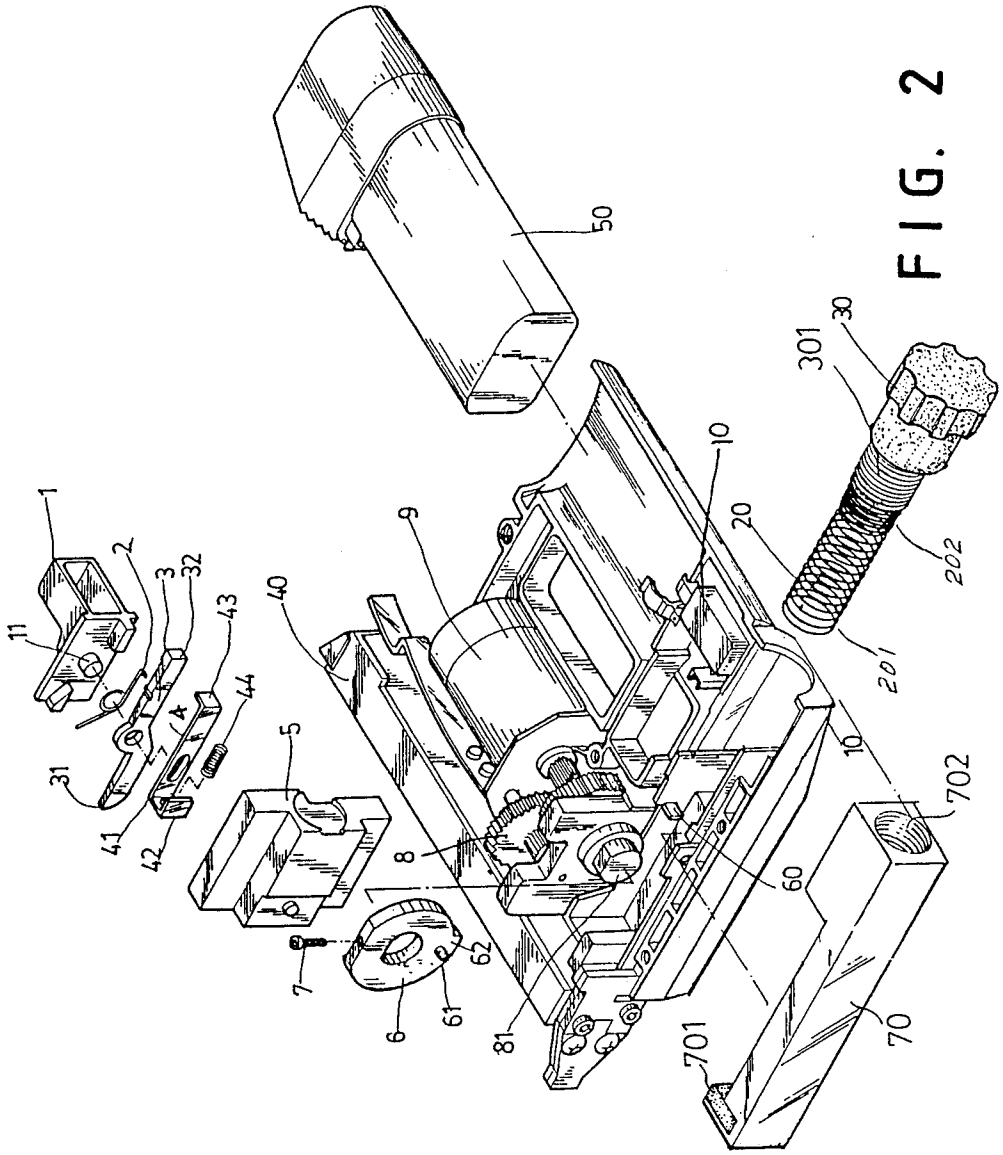
1
2
3
32
11
43
44
31
41
42
5
40
9
8
7
6
61
62
81
50
10
20
301
30
202
201
702
60
70
701

FIG. 2

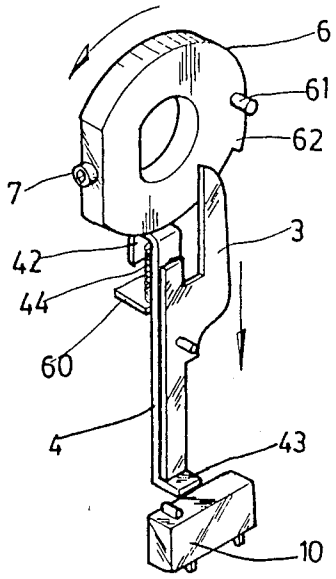

FIG. 3A

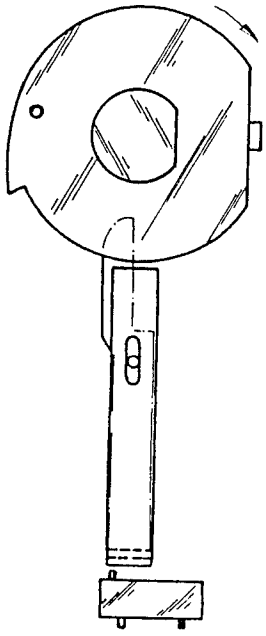

FIG. 3B

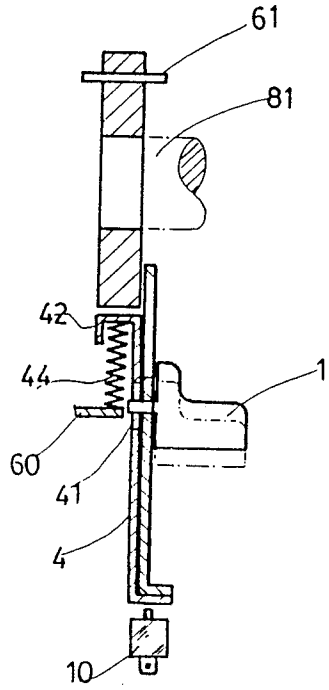

FIG. 3C

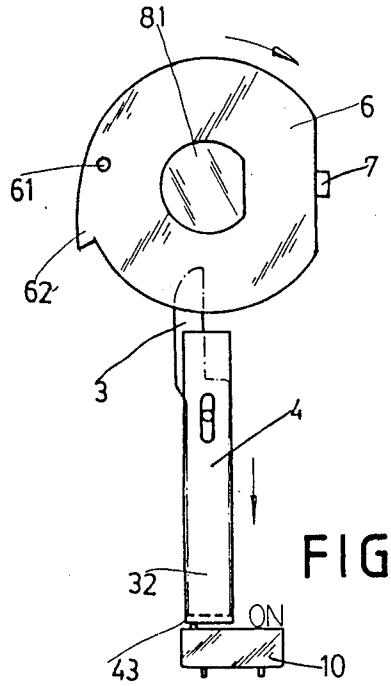

FIG. 4A

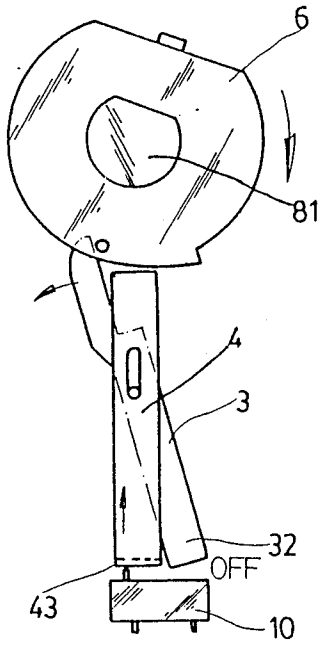

FIG. 4B

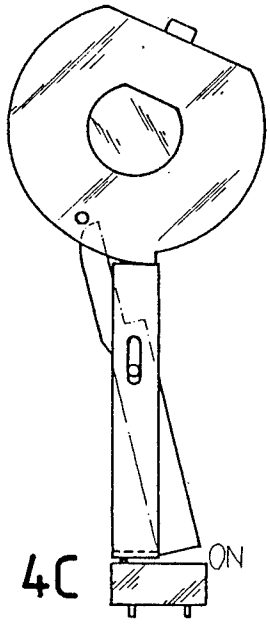

FIG. 4C

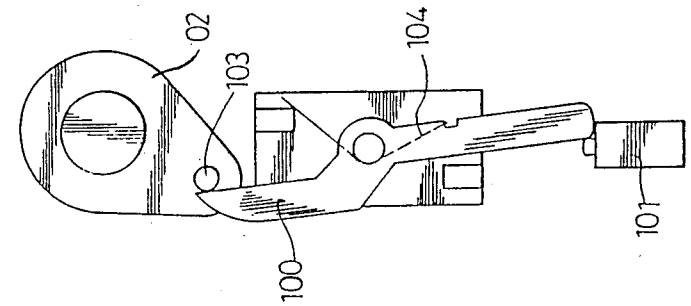

FIG. 5A

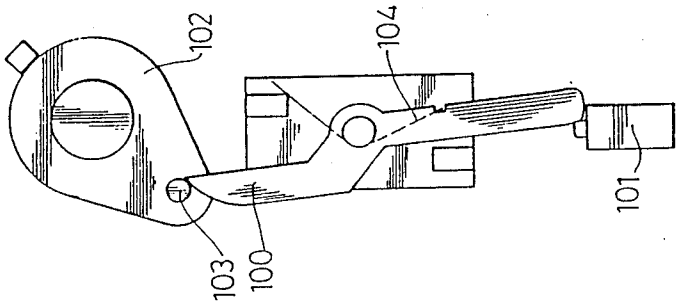

FIG. 5B

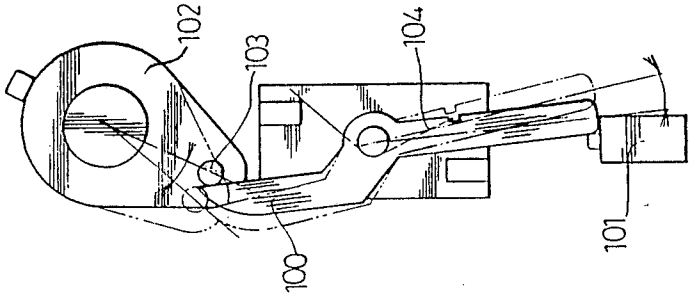

FIG. 5C

FIG. 5D

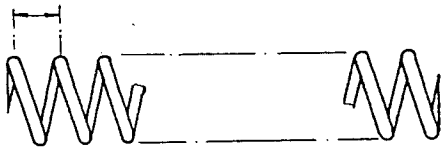

FIG. 6A

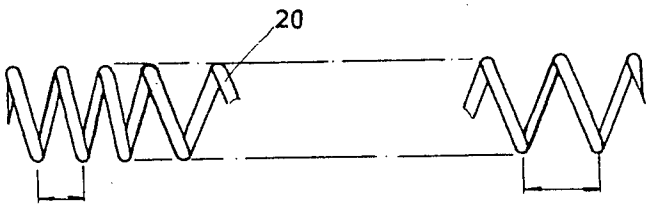

FIG. 6B

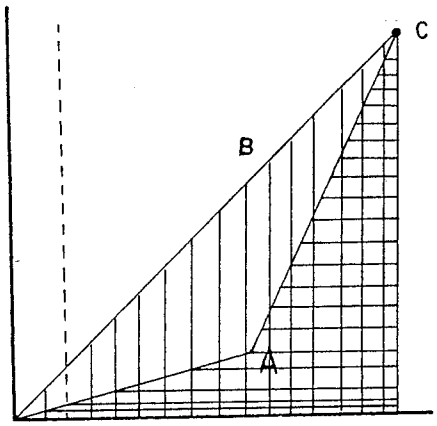

FIG. 6C

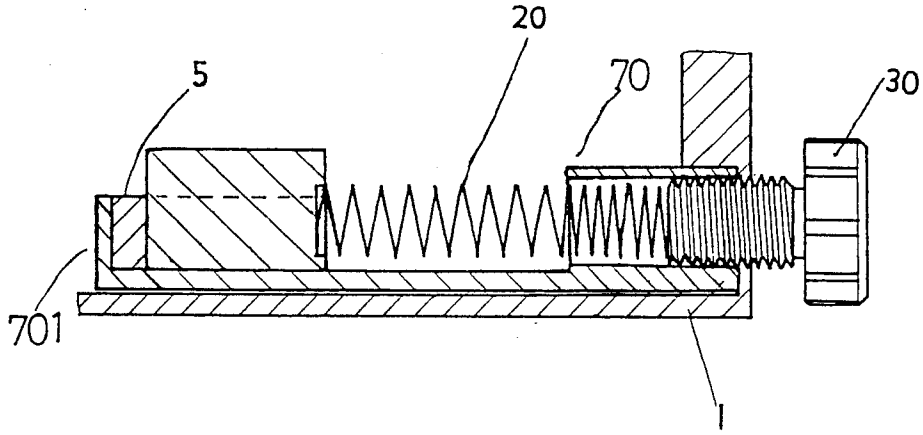

FIG 7

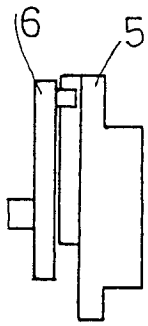

FIG. 8A

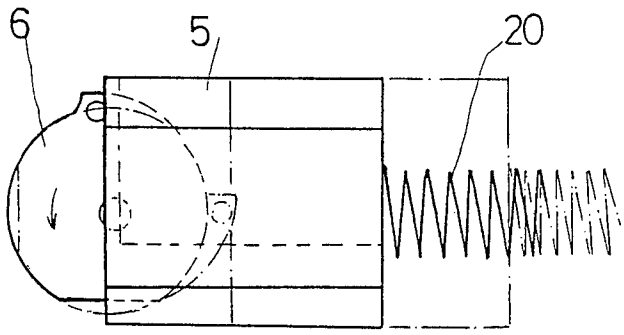

FIG. 8B

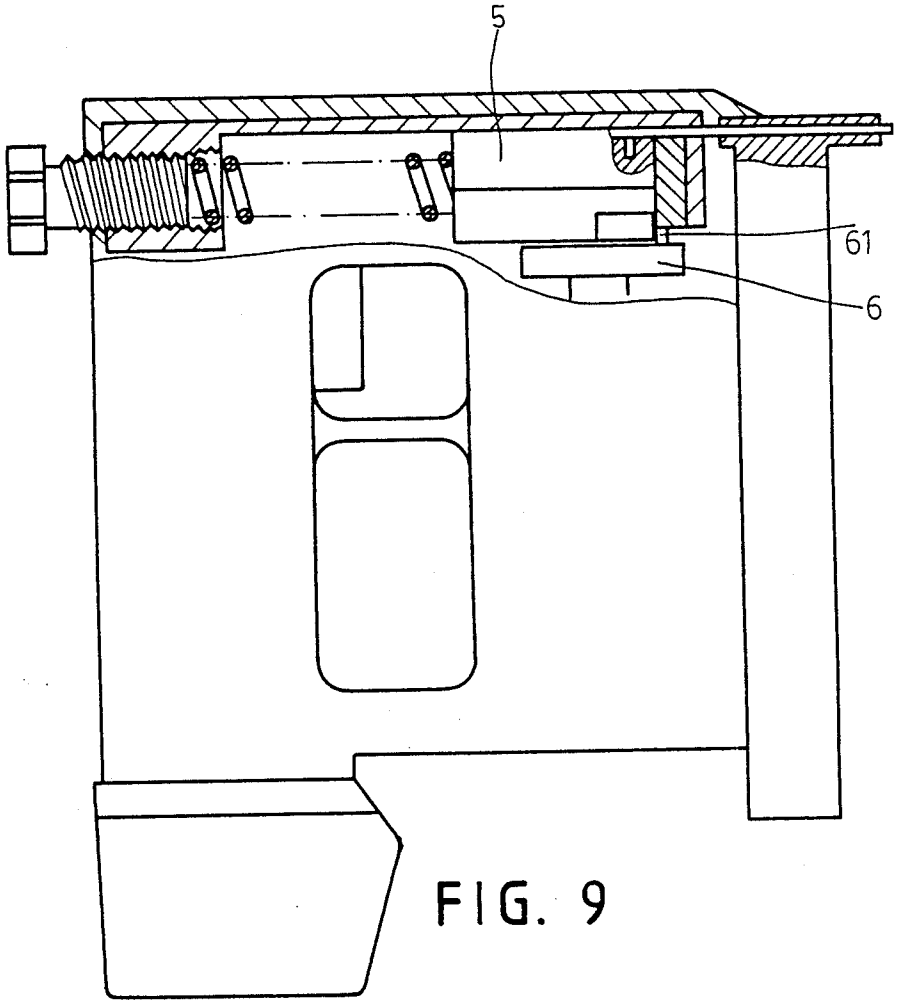

FIG. 9

ELECTRIC STAPLING GUN WITH AUTO-RESET, ENERGY-SAVING AND SHOCK-ABSORBING FUNCTIONS

BACKGROUND OF THE INVENTION

It is found that the prior art stapling gun is controlled by a micro-switch. As illustrated in FIG. **5** when the trigger is pressed, the link rod **100** on the trigger will press the micro-switch **101**, turning on the power and actuating the motor. The motor will rotate a cam **102** the pin **103** of which will urge a ram to compress a spring. As the pin **103** of the cam **102** gets out of the hammer, the compressed spring will press the ram to strike a staple out of the stapling gun. The cam **102** will continue to rotate to push the link rod **100** aside and separating the lower end of the link rod **100** from the micro-switch (see FIG. **5C**) thereby turning off the power. Hence, when the trigger is pressed once, only a staple will be struck out of the stapling gun thus ensuring safety. However, due to inertia, the cam **102** will continue to rotate for a little while and stop at the position at FIG. **5B**, for example. When the trigger is released, the link rod **100** will be moved back to the original vertical position (see FIG. **5A**) by the spring **104** waiting for next operation.

Nevertheless, the cam **102** will sometime stop at the position shown in FIG. **5D** in case of unstable operation or insufficient power. Meanwhile, the link rod **100** is disposed at an inclined position so that even when the trigger is pressed, the link rod **100** cannot press the micro-switch **101**. In short, the link rod **100** is disposed at the dead point. Thus, in order to use the stapling gun, it is necessary to insert a screw driver into the stapling gun to turn on the micro-switch **101** so as to move the link rod **100** away from the dead point.

It is, therefore, an object of the present invention to provide a stapling gun which may obviate and mitigate the above-mentioned drawbacks.

SUMMARY OF THE INVENTION

This invention relates to a power stapling gun with auto-reset, energy-saving and shock-absoring functions.

It is the principle object of the present invention to provide a power stapling gun which utilizes a cam to turn on a micro-switch at the dead point of the prior art power stapling gun so as to actuate the motor once again to move the cam away from the dead point thereby achieving the auto-reset purpose.

It is another object of the present invention to provide a power stapling gun which makes use of a helical spring with different pitches at both ends so as to reduce the energy required for striking the staple.

It is a further object of the present invention to provide a power stapling gun which is provided with a shock absorbing means for decreasing shock and extending the service life thereof.

BRIEF DESCRIPTION OF THE DRAWINGS

FIG. **1** is a perspective view of a power stapling gun with auto-reset, energy-saving and shock-absorbing functions according to the present invention;

FIG. **2** is an exploded view of the power stapling gun;

FIGS. **3A–3C** show the normal position of the auto-reset means of the power stapling gun;

FIGS. **4A–4C** show the principle of the auto-reset means of the power stapling gun;

FIGS. **5A–5D** show how the dead point occurs in the prior art stapling gun;

FIGS. **6A–6C** show the energy-saving principle of the power stapling gun;

FIG. **7** shows the construction of the shock-absorbing means of the power stapling gun; and

FIGS. **8*a*** and **8*b*** show how the ram works.

FIG. **9** is a cut away view showing how the ram works.

DETAILED DESCRIPTION OF THE PREFERRED EMBODIMENT

With reference to the drawings and in particular to FIGS. **1** and **2** thereof, the power stapling gun according to the present invention mainly comprises a trigger **1**, a first link rod **3**, a second link rod **4**, a cam **6** and a micro-switch **10**. The trigger **1** is mounted in some position near the central part of the stapling gun so as to control the stapling action. The first link rod **3** is pivoted on the inner side of the trigger **1** and kept at a vertical position by a spring **2** normally (see FIG. **3**). Hence, when the trigger **1** is pressed, the first link rod **3** will go downwards accordingly. The second link rod **4** is formed with an elongated slot **41** put on to a pin **11** of the trigger **1** and can move upwards and downwards therealong. A spring **44** is disposed between the end **42** of the second link rod **4** and a positioning lug **60** of the house of the stapling gun so as to return the second link rod **4** to its original position when released. At the other end of the second link rod **4** there is a projection **43** for receiving the lower end **32** of the first link rod **3** so that when the first link rod **4** is moved downwards, the second link rod **4** will move downwards too. The cam **6** is fixedly mounted on an output shaft **81** of the gearing **8** the input shaft of which is connected to a driving shaft (not shown) of the motor **9**. Consequently, when the motor **9** rotates, the cam **6** will rotate therewith via the gearing **8**. One end of the cam **6** has a pin **61** for urging a ram **5** to compress a spring **20** which will push the ram **5** to hit a staple (not shown) out of a guiding groove (not shown) when the cam **6** continues to rotate so that the pin **61** of the cam **6** gets away from the ram **5**. The micro-switch **10** is disposed below the first link rod **3** and aligned with the lower end **32** of the first link rod **3** normally. Thus, when the trigger **1** is pressed, the first link rod **3** will move vertically downwards to turn on the micro-switch **10**. Therefore, the power supply **50** will be connected to the motor **9** which will carry out stapling action. The threaded nut **30** is used for keeping the spring **20** in the stapling gun and adjusting the force to compress the ram **5**.

When in use, first press the trigger **1** to move down the first link rod **3** which will press downward the projection **43** of the second link rod **4** thereby activating the micro-switch **10** to connect the power supply **50** to the motor **9**. Then, the cam **6** will rotate and the pin **61** thereof will urge the ram **5** to compress the spring **20**. As the cam **6** further rotates and the pin **61** gets away from the ram **5**, the spring **20** will force the ram **5** to hit a staple out of the guiding groove **40**. The cam **6** continues to rotate (see FIG. **4B**) and move the first link rod **3** sidewards with the pin **61** hence separating the lower end **32** of the first link rod **3** from the micro-switch **10** and turning off the power supply. In consequence, the cam **6** will stop hitting the ram **5** and so only a staple will be hitted out when the trigger **1** is pressed down once thus ensuring safety. In case the cam **6** stops at the dead point of the prior art electric stapling gun (see

FIG. 4B), the lobe **62** of the cam **6** will press the second link rod **4** the projection **43** of which will turn on the micro-switch **10** activating the motor **9** again so as to move the cam **6** to get away from the dead point and achieving the auto-reset purpose. When the cam **6** continues to rotate so that the lobe **62** thereof gets away from the second link rod **4**, the second link rod **4** and the first link rod **3** will return to their orginal positions by means of the springs **43** and **2**.

Referring to the FIGS. **2**, **6** and **7**, one end **201** of the spring **20** has a large pitch than the other end **201** thereof. Looking again at FIG. **2**, the work required by the spring **200** with equidistant pitch compressed to point C is equal to the area under line B while the work required by the present spring **20** with different pitches compressed to point C is equal to the area under line A. As illustrated, the area under line A is smaller than that under line B. In brief, the present invention will require a lesser work than the prior art in order to render the same momentum to the staple thereby saving electric power. Further, as shown in FIG. **6**, the force for compressing the spring **20** is smaller at the beginning and so the impact at the last stage will be smaller too, hence relieving the destruction caused by impact and extending the service life of the driving mechanism as well.

FIG. **7** shows a sectional view of the shock-absorbing means of the present invention. As can be seen, the shock-absorbing means **70** comprises a metallic protective ferrule embedded on the housing of the electric stapling gun so as to strengthen construction thereof. The right end of the shock-absorbing means **70** is provided with internal threads **702** for engaging with external threads **301** of the threaded nut **30**. The spring **20** is mounted at the left side of the threaded nut **30** and the ram **5** is partially disposed within the metallic protective ferrle and urged by the spring **20** to bear against a piece of rubber pad **701** at the left end of the metallic protective ferrule. Hence, when the trigger **1** is pressed, the motor **9** rotates to drive the cam **6** the pin **62** of which will urge the ram **5** to compress the spring **20**. As the pin **62** of the cam **6** gets away from the ram **5**, the compressed spring **20** will push the ram **5** to hit a staple out of the guiding groove **40**. Since the shock-absorbing means **70** is directly engaged with the threaded nut **30** and the ram **5** may slide within the shock-absorbing means **70**, the ram **5** will not directly strike on the housing of the electric stapling gun. In addition, the rubber pad **701** is used to absorb the shocking when the ram **5** is pushed out by the spring **20** thus reducing the internal stress and the keeping the housing from being damaged. Further, the oscillation is reduced and the service life is extended.

Although this invention has been described with a certain degree of particularity, it is understood that present disclosure is made by way of example only and that numerous changes in the construction and the combination and arrangement of parts may be resorted to without departing from the spirit and scope of the invention as hereinafter claimed.

I claim:

1. An electric stapling gun comprising:

a trigger mounted in the stapling gun:

a first link rod pivoted on an inner side of said trigger and capable of moving therewith;

a second link rod formed with an elongated slot put on to a pin on the inner side of said trigger and a projection for receiving a lower end of said first link rod so that said second link rod will move downwards when said first link rod is pressed and will return to original position by means of a spring when said trigger is released;

a cam fixedly mounted on an output shaft of a gearing and having a lobe on which there is a pin for pushing a ram, said lobe being designed such that when said cam rotates, said lobe will push said first link rod away from said micro-switch and press said second link rod to activate said micro-switch once again;

a micro-switch disposed below said first link rod so that when said trigger is pressed to move said first link rod downwards, said first link rod will turn on said micro-switch with a lower end thereof and connect a power supply to a driving motor to rotate said cam so as to urge said ram to hit a staple out of said stapling gun;

a spring with different pitches at both ends and used to push said ram to carry out stapling action; and

a metallic protective ferrule fixedly mounted in said electric stapling gun and used to receive said spring and part of said ram and having a rubber pad on an inner end thereof.

* * * * *