US007139283B2

(12) **United States Patent**
Quigley et al.

(10) **Patent No.: US 7,139,283 B2**
(45) **Date of Patent: Nov. 21, 2006**

(54) **ROBUST TECHNIQUES FOR OPTIMAL UPSTREAM COMMUNICATION BETWEEN CABLE MODEM SUBSCRIBERS AND A HEADEND**

(75) Inventors: **Thomas J. Quigley**, Lawrenceville, GA (US); **Jonathan S. Min**, Buena Park, CA (US); **Lisa V. Denney**, Suwanee, GA (US); **Henry Samueli**, Corona Del Mar, CA (US); **Sean F. Nazareth**, Anaheim Hills, CA (US); **Feng Chen**, Irvine, CA (US); **Fang Lu**, Irvine, CA (US); **Christopher R. Jones**, Newport Beach, CA (US)

(73) Assignee: **Broadcom Corporation**, Irvine, CA (US)

(*) Notice: Subject to any disclaimer, the term of this patent is extended or adjusted under 35 U.S.C. 154(b) by 843 days.

(21) Appl. No.: **09/780,179**

(22) Filed: **Feb. 9, 2001**

(65) **Prior Publication Data**

US 2001/0055319 A1 Dec. 27, 2001

Related U.S. Application Data

(63) Continuation of application No. 09/574,558, filed on May 19, 2000, now Pat. No. 6,650,624, which is a continuation-in-part of application No. 09/430,821, filed on Oct. 29, 1999.

(60) Provisional application No. 60/106,441, filed on Oct. 30, 1998, provisional application No. 60/106,440, filed on Oct. 30, 1998, provisional application No. 60/106,439, filed on Oct. 30, 1998, provisional application No. 60/106,438, filed on Oct. 30, 1998, provisional application No. 60/106,427, filed on Oct. 30, 1998, provisional application No. 60/106,264, filed on Oct. 30, 1998.

(51) **Int. Cl.**
H04J 3/26 (2006.01)

(52) **U.S. Cl.** **370/432**; 370/468; 725/146

(58) **Field of Classification Search** 370/432, 370/276, 312, 352, 412, 443, 445, 448, 462, 370/468, 478, 221, 437, 447, 458, 436, 314, 370/901; 455/4.2, 5.1; 371/37.4, 436; 375/261, 375/264, 132, 324, 222; 702/182; 725/119, 725/126, 129, 146
See application file for complete search history.

(56) **References Cited**

U.S. PATENT DOCUMENTS

3,839,678 A 10/1974 Bell

(Continued)

FOREIGN PATENT DOCUMENTS

EP 0 353 779 2/1990

(Continued)

OTHER PUBLICATIONS

Thomas J. Kolz, "Upstream HFC Channel Modeling and Physical Layer Design", General Instruments Corporation, SPIE vol. 2917, Nov. 1996, pp. 240-251.

Primary Examiner—Doris H. To
Assistant Examiner—Ian N. Moore
(74) *Attorney, Agent, or Firm*—Sterne, Kessler, Goldstein & Fox, PLLC

(57) **ABSTRACT**

A number of features for enhancing the performance of a cable transmission system in which data is transmitted between a cable modem termination system at a headend and a plurality of cable modems located different distances from the headend. The power transmission level, slot timing, and equalization of the cable modems are set by a ranging process. Data is transmitted by the modems in fragmented form. Various measures are taken to make transmission from the cable modems robust. The upstream data transmission is controlled to permit multiple access from the cable modems.

42 Claims, 82 Drawing Sheets

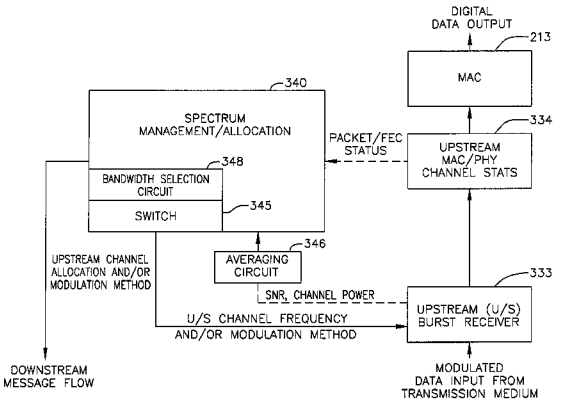

LENOVO-1006

U.S. PATENT DOCUMENTS

4,383,272	A	5/1983	Netravali et al.	
4,520,490	A	5/1985	Wei	
4,617,676	A	10/1986	Jayant et al.	
4,928,272	A	5/1990	Ohue	
4,941,154	A	7/1990	Wei	
4,958,226	A	9/1990	Haskell et al.	
5,115,453	A	5/1992	Calderbank et al.	
5,206,864	A *	4/1993	McConnell	714/755
5,227,878	A	7/1993	Puri et al.	
5,276,706	A	1/1994	Critchlow	
5,339,384	A	8/1994	Chen	
5,341,457	A	8/1994	Hall, II et al.	
5,488,633	A	1/1996	Laroia	
5,491,725	A *	2/1996	White	375/324
5,533,004	A	7/1996	Jasper et al.	
5,553,064	A	9/1996	Paff et al.	
5,572,511	A *	11/1996	Ouyang et al.	370/248
5,579,513	A	11/1996	Strohmer	
5,600,651	A *	2/1997	Molle	370/448
5,612,975	A	3/1997	Becker et al.	
5,627,938	A	5/1997	Johnston	
5,631,846	A	5/1997	Szurkowski	
5,640,424	A	6/1997	Banavong et al.	
5,666,358	A *	9/1997	Paratore et al.	370/347
5,696,765	A *	12/1997	Safadi	370/436
5,703,539	A	12/1997	Gillig et al.	
5,710,765	A	1/1998	Lee et al.	
5,859,671	A	1/1999	Kim	
5,881,363	A	3/1999	Ghosh et al.	
5,903,231	A	5/1999	Emelko	
5,909,564	A *	6/1999	Alexander et al.	710/316
5,943,604	A	8/1999	Chen et al.	
5,963,557	A *	10/1999	Eng	370/432
5,995,916	A *	11/1999	Nixon et al.	702/182
6,005,854	A	12/1999	Xu et al.	
6,011,970	A *	1/2000	McCarthy	455/436
6,028,860	A	2/2000	Laubach et al.	
6,032,019	A *	2/2000	Chen et al.	725/124
6,055,242	A	4/2000	Doshi et al.	
6,108,713	A *	8/2000	Sambamurthy et al.	709/250
6,137,793	A	10/2000	Gorman et al.	
6,208,656	B1 *	3/2001	Hrastar et al.	370/401
6,215,792	B1	4/2001	Abi-Nassif	
6,246,713	B1 *	6/2001	Mattisson	375/132
6,298,098	B1	10/2001	Krasner et al.	
6,353,604	B1	3/2002	Grimwood et al.	
6,438,174	B1 *	8/2002	Isaksson et al.	375/261
6,459,703	B1	10/2002	Grimwood et al.	
6,480,477	B1 *	11/2002	Treadaway et al.	370/314
6,529,520	B1	3/2003	Lee et al.	
6,546,017	B1	4/2003	Khaunte	
6,563,829	B1	5/2003	Lyles et al.	
6,614,799	B1	9/2003	Gummalla et al.	
6,647,069	B1	11/2003	Segal et al.	
6,647,070	B1	11/2003	Shalvi et al.	
6,650,624	B1	11/2003	Quigley et al.	
6,650,698	B1	11/2003	Liau et al.	
6,704,932	B1	3/2004	Matsunaga et al.	
6,785,252	B1	8/2004	Zimmerman et al.	
6,961,314	B1	11/2005	Quigley et al.	
6,965,616	B1	11/2005	Quigley et al.	

FOREIGN PATENT DOCUMENTS

EP	0 548 318	6/1993
EP	0 748 120	12/1996
EP	0 768 769	4/1997
GB	2 312 362	10/1997
JP	10-243371	9/1998
WO	97/10553	3/1997
WO	97/15129	4/1997
WO	97/16046	5/1997
WO	97/41691	11/1997
WO	WO 98/47236 A1	10/1998

OTHER PUBLICATIONS

James E. Dail, et al., "Adaptive Digital Access Protocol: A MAC Protocol for Multiservice Broadband Access Networks", AT&T Bell Laboratories, 2460 IEEE Communications Magazine 34, Mar. 1996, pp. 104-112.

Robert Wolters, et al., "An Initialisation for a Burst-Mode Transport HFC System with Delay Determination by Power Distribution Measurement", Alcatel Telecom Research Division, SPIE vol. 3233, Nov. 1997, pp. 353-360.

Bharat T. Doshi, et al., "A Broadband Multiple Access Protocol for STM, ATM, and Variable Length Data Services on Hybrid Fiber-Coax Networks", Bell Labs Technical Journal, Jun. 1996, pp. 36-65.

John O. Limb, "A Protocol for Efficient Transfer of Data Over Hybrid Fiber/Coax System", IEEE/ACM Transactions on Networking, vol. 5, No. 6, Dec. 1997, pp. 872-881.

Copy of International Search Report dated Jul. 28, 2000 relating to corresponding International Application No. PCT/US99/25675, 6 pages.

Declaration of Lisa V. Denney, executed Aug. 14, 2002, including attached Exhibits 1, 2 and 3.

Quigley, T.J. et al., U.S. Pat. Appl. No. 09/714,713, filed Nov. 16, 2000, entitled "Data Packet Fragmentation in a Cable Modem System".

Quigley, T.J. et al., U.S. Pat. Appl. No. 09/710,238, filed Nov. 9, 2000, entitled "Pre-Equilization Technique For Upstream Communication Between Cable Modem And Headend".

Quigley, T.J. et al., U.S. Pat. Appl. No. 11/292,098, filed Dec. 2, 2005, entitled "Data Packet Fragmentation in a Cable Modem System".

Declaration of Lisa V. Denney, dated Mar. 22, 2004, (7 pages), with Exhibits 1-4.

Declaration of Lisa V. Denney, dated Mar. 22, 2004, (8 pages), with Exhibits 1-5.

Erup, L. et al., "Interpolation in Digital Modems - Part II: Implementation and Performance," *IEEE Transactions on Communications,* vol. 41, No. 6, pp. 998-1008 (Jun. 1993).

Franks, L.E., "Evaluation of the Effects of Notch Filters on Digital Data Transmission," *IEEE Transactions on Communication Technology,* pp. 447-449 (Aug. 1970).

Gardner, F.M., "Interpolation in Digital Modems - Part I: Fundamentals," *IEEE Transactions on Communications,* vol. 41, No. 3, pp. 501-507 (Mar. 1993).

Office Action, dated Aug. 5, 2004, from U.S. Pat. Appl. No. 09/430,821, filed Oct. 29, 1999, 25 pages.

International Search Report, dated Oct. 9, 2000, from PCT Patent Appl. No. PCT/US99/25675, 8 pages.

Written Opinion, dated Nov. 15, 2000, from PCT Patent Appl. No. PCT/US99/25675, 10 pages.

* cited by examiner

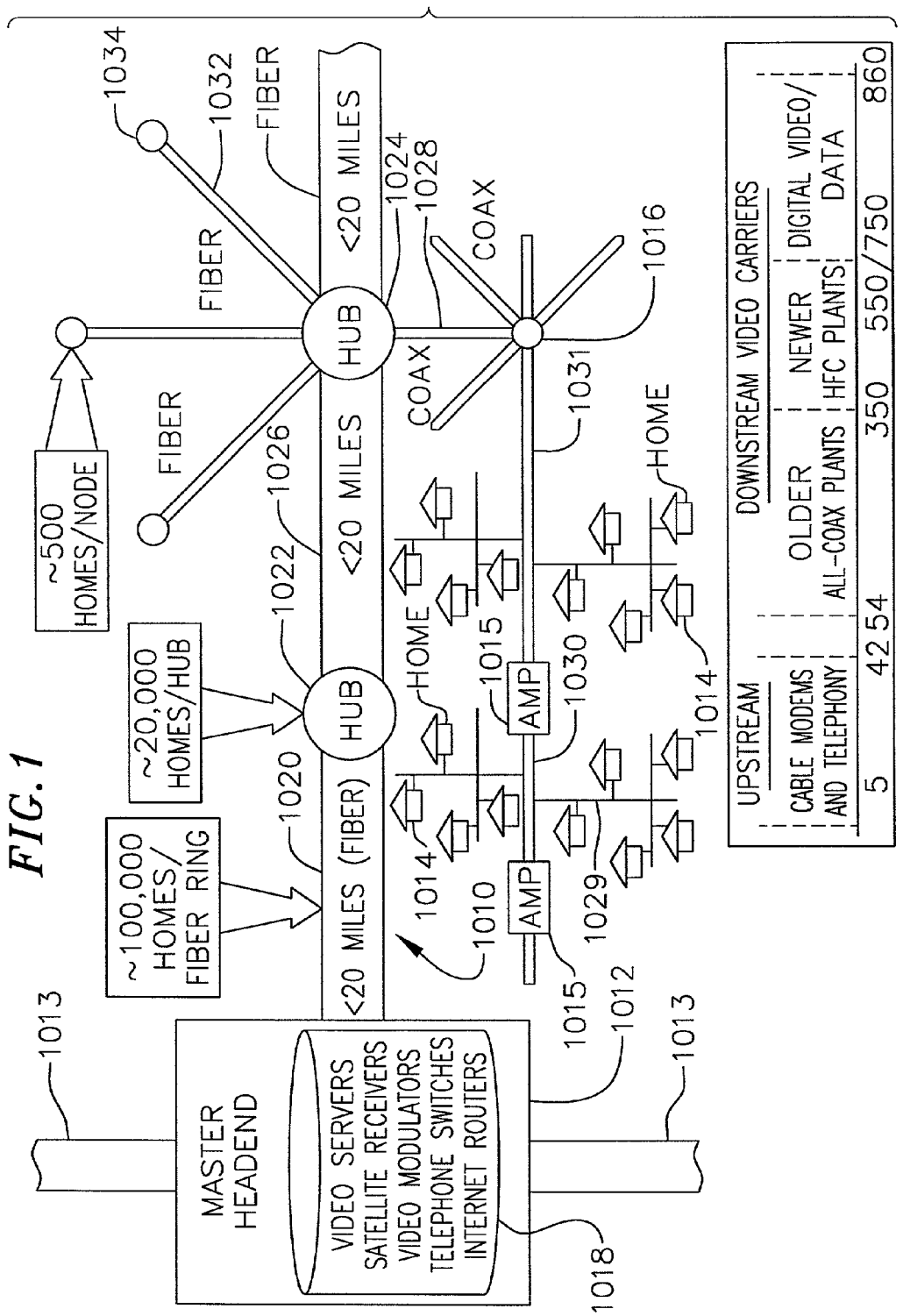
~500 HOMES/NODE
~20,000 HOMES/HUB
~100,000 HOMES/ FIBER RING
MASTER HEADEND
VIDEO SERVERS
SATELLITE RECEIVERS
VIDEO MODULATORS
TELEPHONE SWITCHES
INTERNET ROUTERS
<20 MILES (FIBER)
<20 MILES
<20 MILES
<20 MILES
HUB
HUB
FIBER
FIBER
FIBER
COAX
COAX
AMP
AMP
HOME
HOME
1010
1012
1013
1013
1014
1014
1015
1015
1016
1018
1020
1022
1024
1026
1028
1029
1030
1031
1032
1034
UPSTREAM
CABLE MODEMS AND TELEPHONY
5
42 54
DOWNSTREAM VIDEO CARRIERS
OLDER ALL-COAX PLANTS
350
NEWER HFC PLANTS
550/750
DIGITAL VIDEO/ DATA
860

FIG. 1

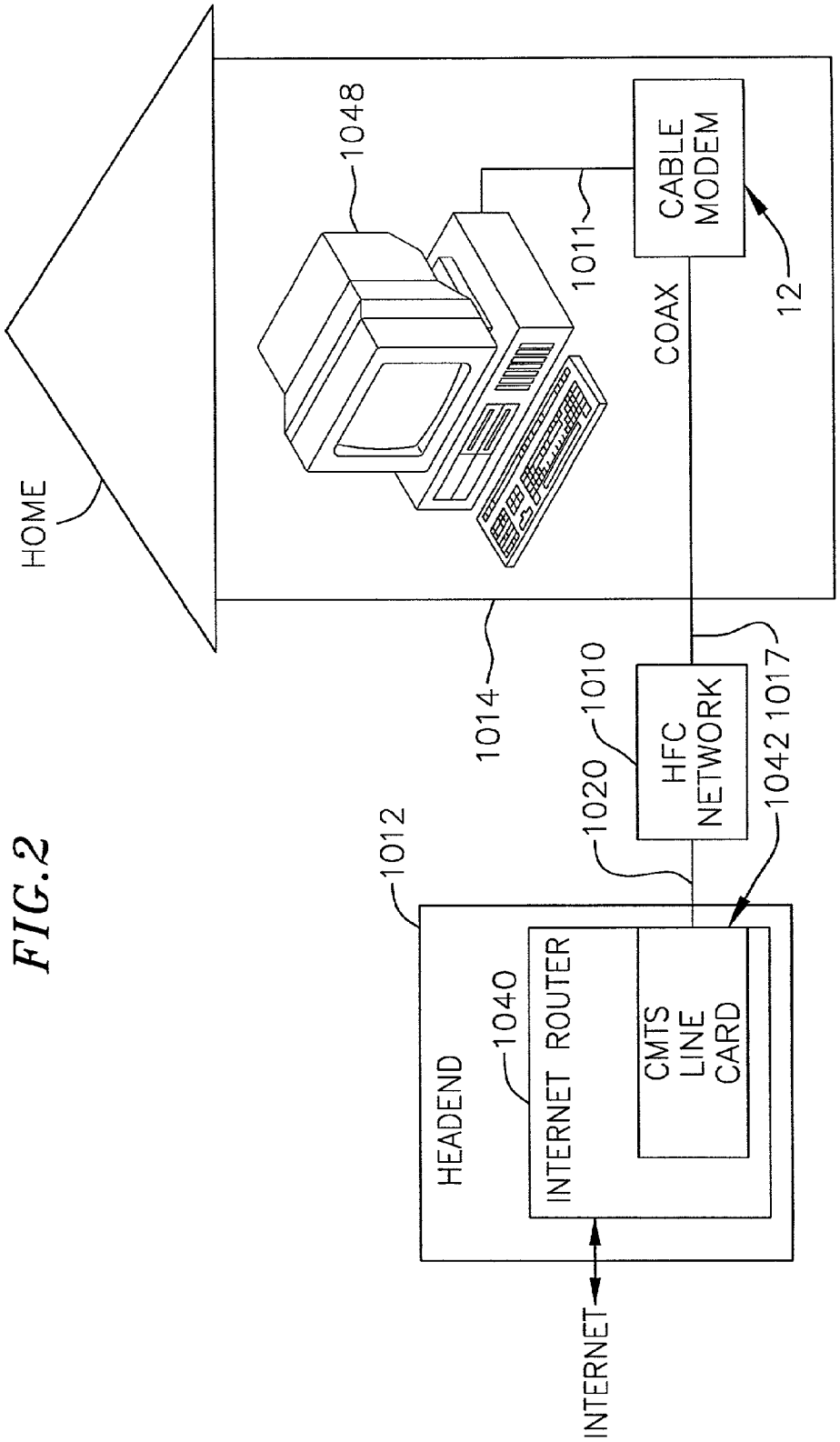
HOME
1048
1011
CABLE MODEM
12
COAX
1014
1010
HFC NETWORK
1017
1042
1020
1012
HEADEND
1040
INTERNET ROUTER
CMTS LINE CARD
INTERNET

FIG. 2

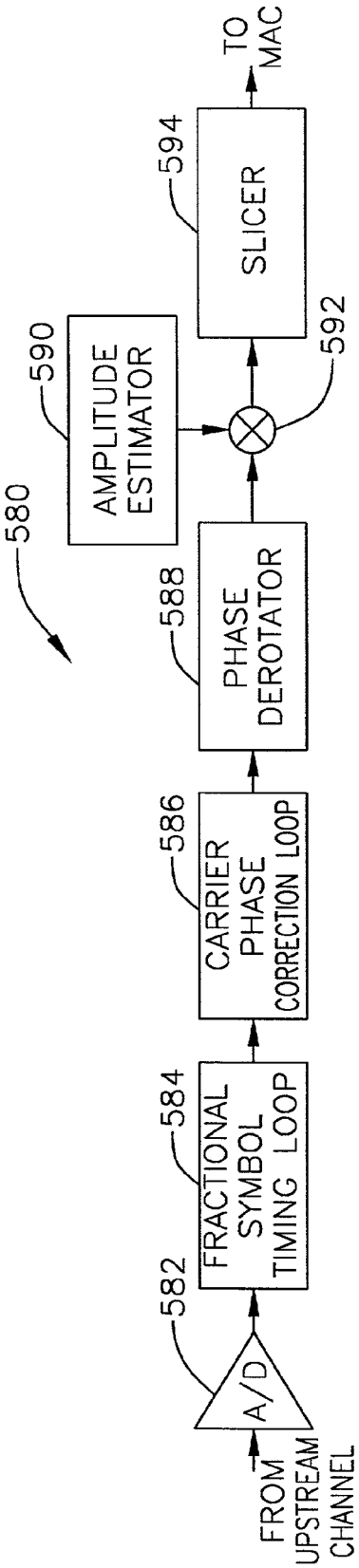
580
FROM UPSTREAM CHANNEL
582
A/D
584
FRACTIONAL SYMBOL TIMING LOOP
586
CARRIER PHASE CORRECTION LOOP
588
PHASE DEROTATOR
590
AMPLITUDE ESTIMATOR
592
594
SLICER
TO MAC

FIG. 3

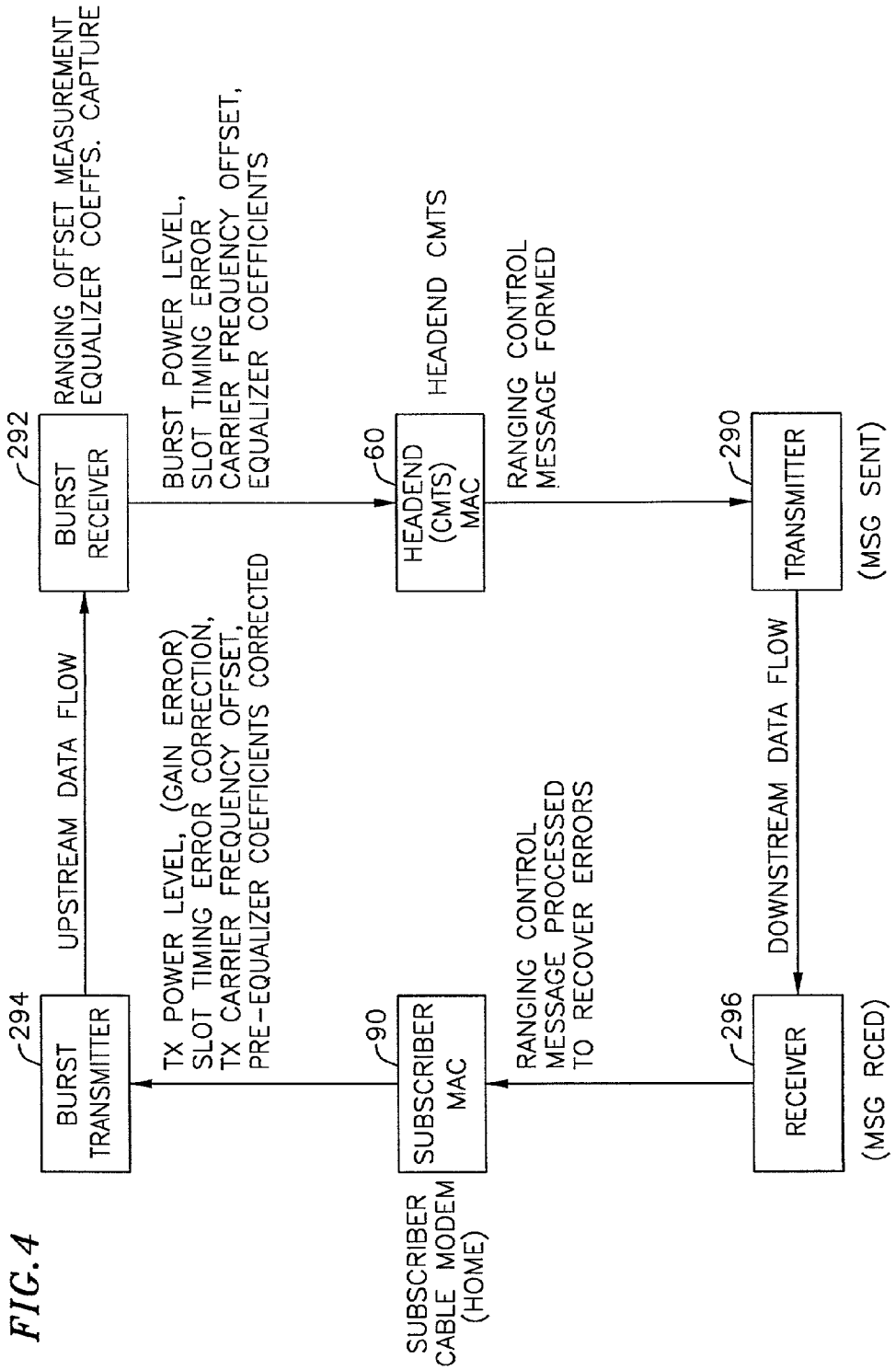
294
BURST TRANSMITTER
UPSTREAM DATA FLOW
292
BURST RECEIVER
RANGING OFFSET MEASUREMENT
EQUALIZER COEFFS. CAPTURE
TX POWER LEVEL, (GAIN ERROR)
SLOT TIMING ERROR CORRECTION,
TX CARRIER FREQUENCY OFFSET,
PRE-EQUALIZER COEFFICIENTS CORRECTED
BURST POWER LEVEL,
SLOT TIMING ERROR
CARRIER FREQUENCY OFFSET,
EQUALIZER COEFFICIENTS
90
SUBSCRIBER MAC
SUBSCRIBER CABLE MODEM (HOME)
60
HEADEND (CMTS) MAC
HEADEND CMTS
RANGING CONTROL
MESSAGE PROCESSED
TO RECOVER ERRORS
RANGING CONTROL
MESSAGE FORMED
290
TRANSMITTER
(MSG SENT)
DOWNSTREAM DATA FLOW
296
RECEIVER
(MSG RCED)

FIG. 4

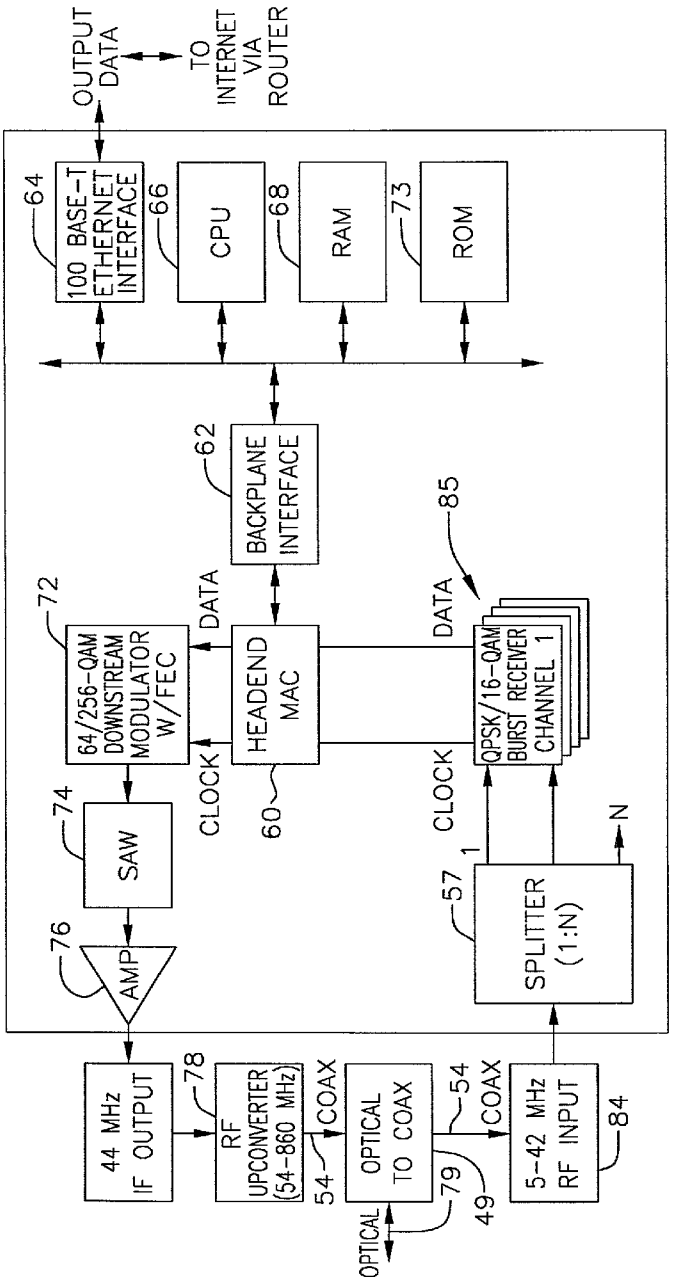
1042
OUTPUT DATA
TO INTERNET VIA ROUTER
64
100 BASE-T ETHERNET INTERFACE
66
CPU
68
RAM
73
ROM
62
BACKPLANE INTERFACE
72
64/256-QAM DOWNSTREAM MODULATOR W/FEC
DATA
HEADEND MAC
CLOCK
60
85
DATA
QPSK/16-QAM BURST RECEIVER CHANNEL 1
CLOCK
74
SAW
76
AMP
57
SPLITTER (1:N)
1
N
44 MHz IF OUTPUT
78
RF UPCONVERTER (54-860 MHz)
54
COAX
OPTICAL TO COAX
79
OPTICAL
54
COAX
49
5-42 MHz RF INPUT
84

FIG. 5A

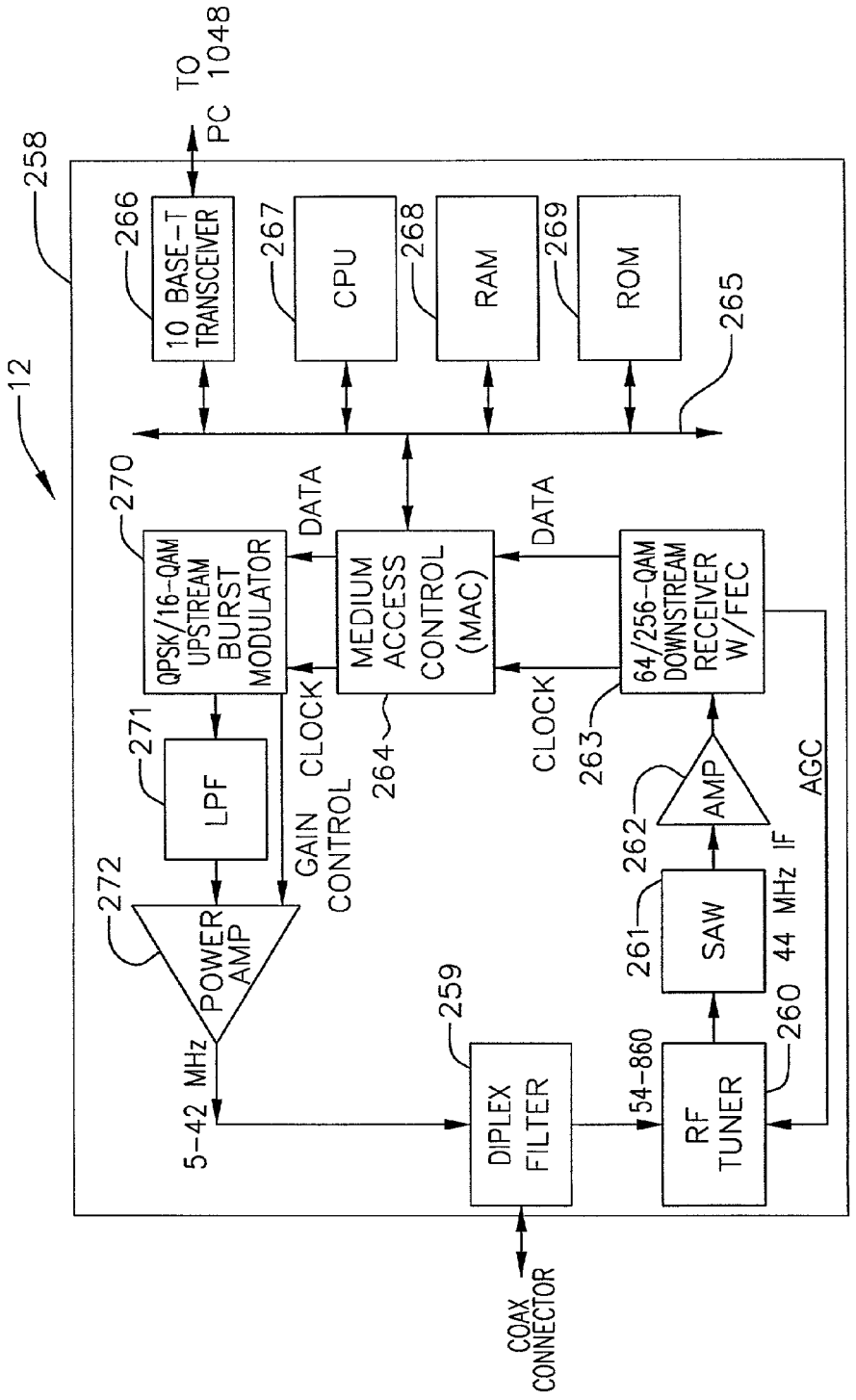
12
258
TO PC 1048
266
10 BASE-T TRANSCEIVER
267
CPU
268
RAM
269
ROM
265
270
QPSK/16-QAM UPSTREAM BURST MODULATOR
DATA
MEDIUM ACCESS CONTROL (MAC)
DATA
64/256-QAM DOWNSTREAM RECEIVER W/FEC
271
LPF
CLOCK
264
CLOCK
263
262
AMP
AGC
272
POWER AMP
GAIN CONTROL
261
SAW
44 MHz IF
259
DIPLEX FILTER
5-42 MHz
54-860
RF TUNER
260
COAX CONNECTOR

FIG. 5B

FIG. 6A

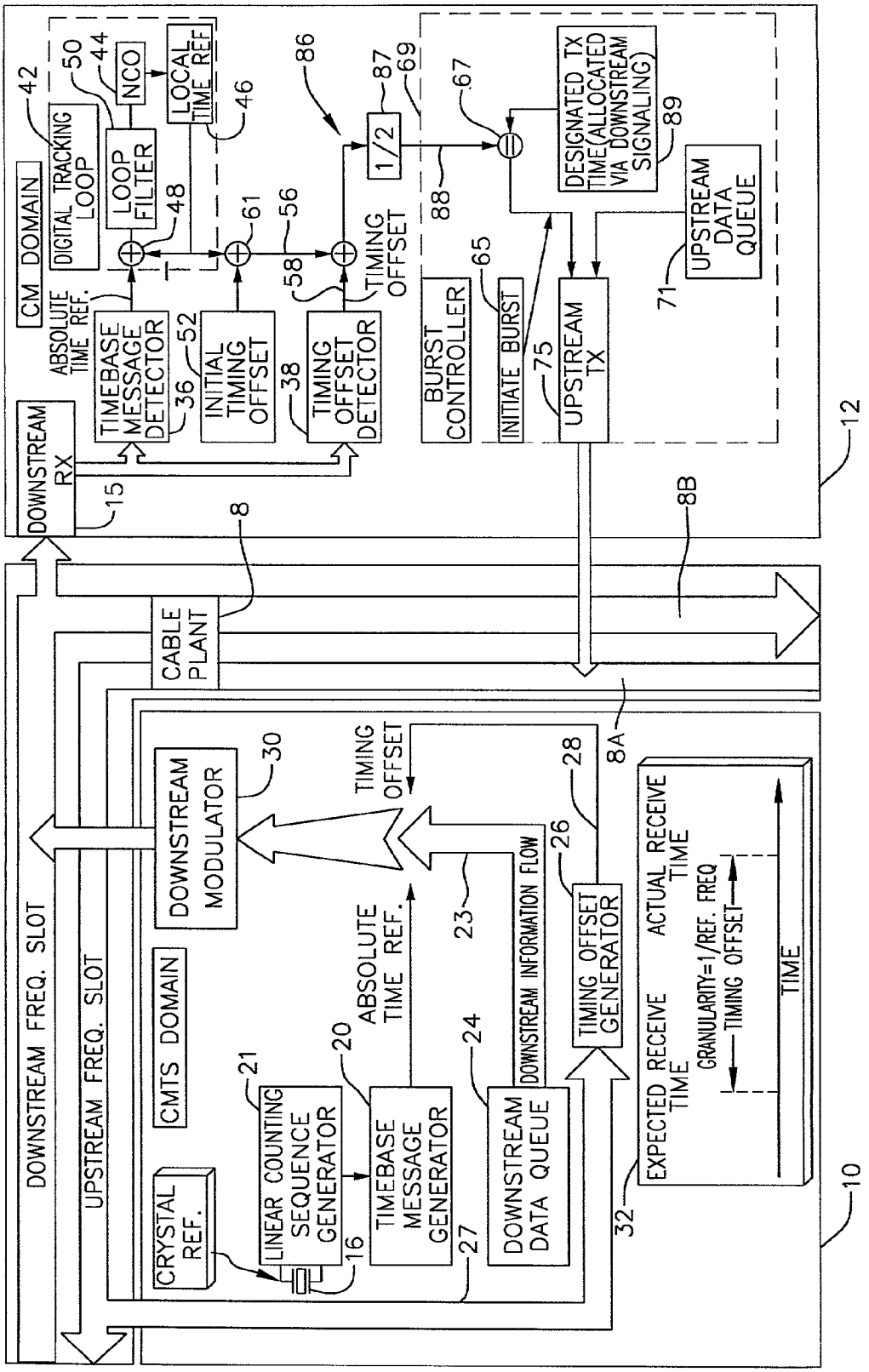
CM DOMAIN
DIGITAL TRACKING LOOP
LOOP FILTER
NCO
LOCAL TIME REF
ABSOLUTE TIME REF.
TIMEBASE MESSAGE DETECTOR
INITIAL TIMING OFFSET
TIMING OFFSET DETECTOR
TIMING OFFSET
1/2
BURST CONTROLLER
INITIATE BURST
UPSTREAM TX
DESIGNATED TX TIME (ALLOCATED VIA DOWNSTREAM SIGNALING)
UPSTREAM DATA QUEUE
DOWNSTREAM RX
CABLE PLANT
DOWNSTREAM FREQ. SLOT
UPSTREAM FREQ. SLOT
CMTS DOMAIN
DOWNSTREAM MODULATOR
TIMING OFFSET
ABSOLUTE TIME REF.
DOWNSTREAM INFORMATION FLOW
TIMING OFFSET GENERATOR
CRYSTAL REF.
LINEAR COUNTING SEQUENCE GENERATOR
TIMEBASE MESSAGE GENERATOR
DOWNSTREAM DATA QUEUE
EXPECTED RECEIVE TIME
ACTUAL RECEIVE TIME
GRANULARITY=1/REF. FREQ
TIMING OFFSET
TIME
42
50
44
46
48
61
56
58
86
87
69
67
88
89
71
65
75
36
52
38
15
8
8B
12
8A
30
28
26
23
21
20
24
16
27
32
10

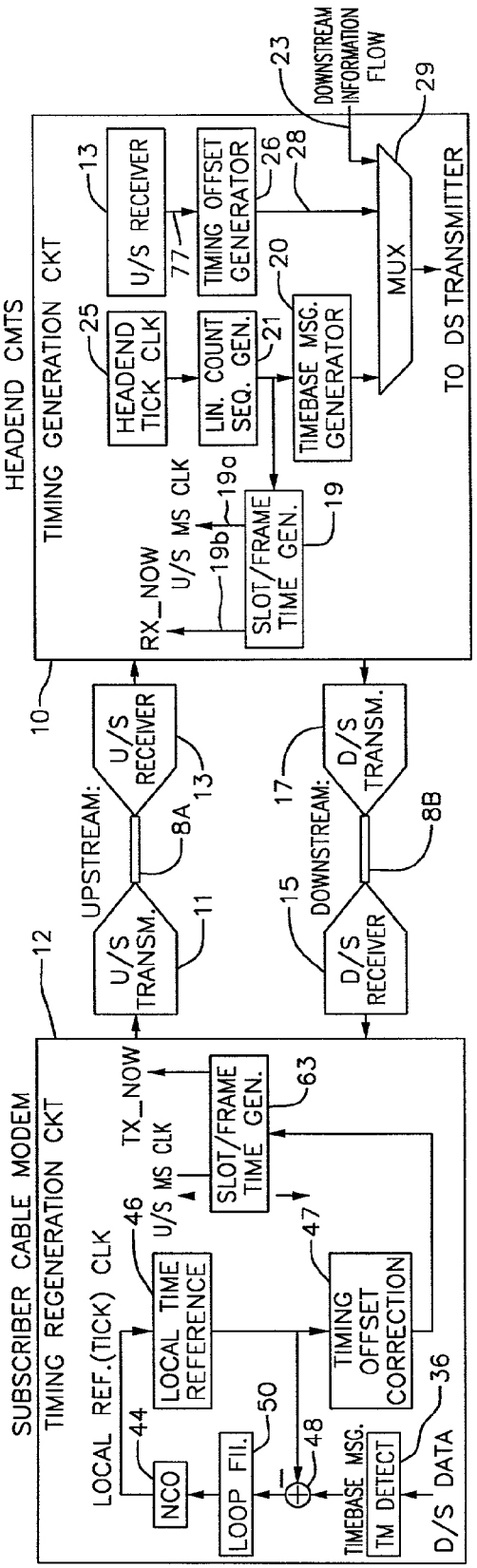
HEADEND CMTS
TIMING GENERATION CKT
10
U/S RECEIVER
13
HEADEND TICK CLK
25
TIMING OFFSET GENERATOR
26
77
LIN. COUNT SEQ. GEN.
21
TIMEBASE MSG. GENERATOR
20
MUX
28
DOWNSTREAM INFORMATION FLOW
23
29
TO DS TRANSMITTER
SLOT/FRAME TIME GEN.
19
19a
19b
U/S MS CLK
RX_NOW
UPSTREAM:
U/S RECEIVER
13
8A
U/S TRANSM.
11
DOWNSTREAM:
D/S TRANSM.
17
8B
D/S RECEIVER
15
12
SUBSCRIBER CABLE MODEM
TIMING REGENERATION CKT
LOCAL REF.(TICK) CLK
NCO
44
LOOP FIL.
50
LOCAL TIME REFERENCE
46
U/S MS CLK
TX_NOW
SLOT/FRAME TIME GEN.
63
TIMING OFFSET CORRECTION
47
48
TIMEBASE MSG.
TM DETECT
36
D/S DATA

FIG. 6B

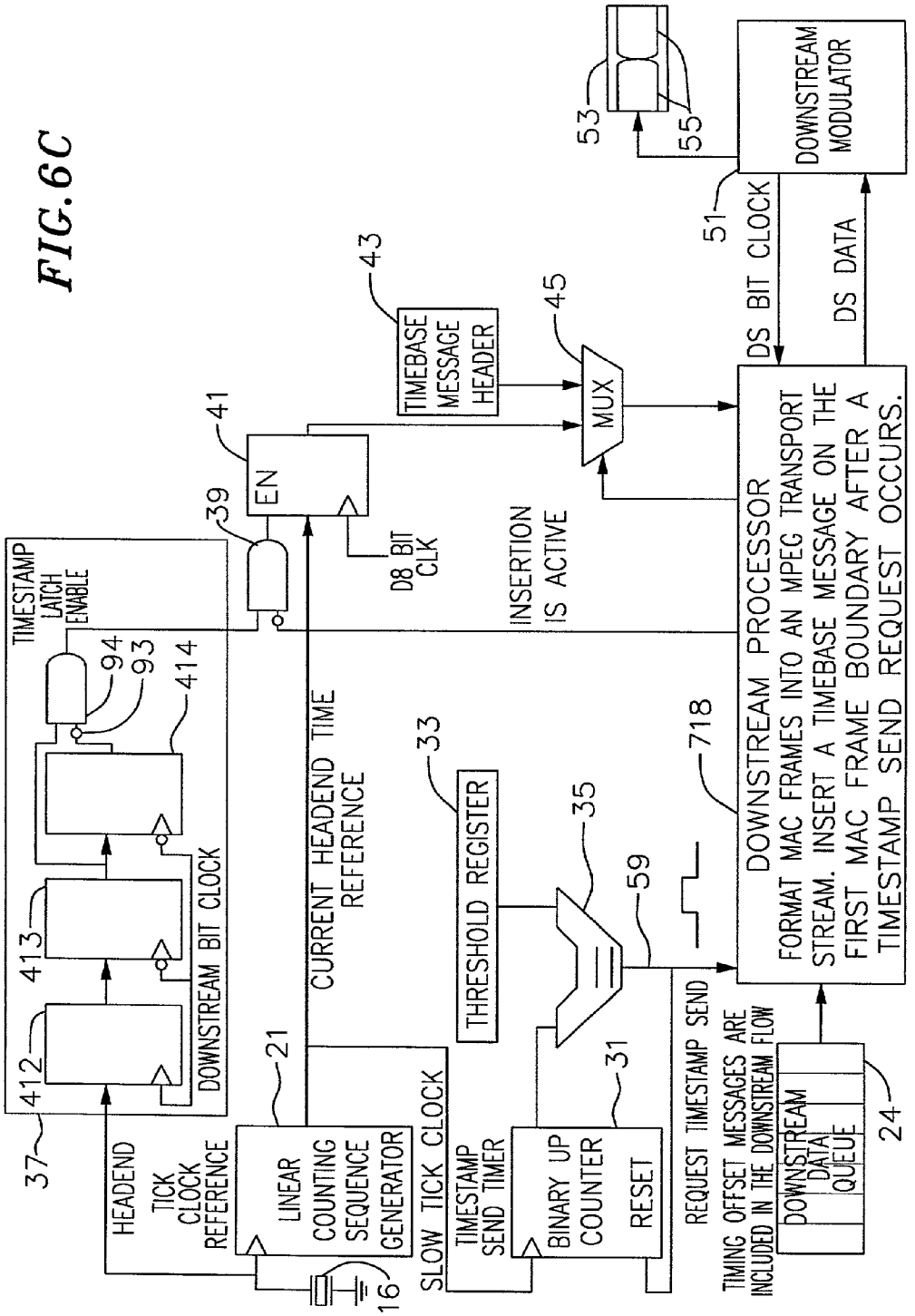
TIMESTAMP LATCH ENABLE
94
93
414
413
412
37
DOWNSTREAM BIT CLOCK
HEADEND TICK CLOCK REFERENCE
39
41
EN
D8 BIT CLK
CURRENT HEADEND TIME REFERENCE
21
LINEAR COUNTING SEQUENCE GENERATOR
16
SLOW TICK CLOCK
43
TIMEBASE MESSAGE HEADER
45
MUX
INSERTION IS ACTIVE
33
THRESHOLD REGISTER
35
59
TIMESTAMP SEND TIMER
BINARY UP COUNTER
RESET
31
REQUEST TIMESTAMP SEND
718
DOWNSTREAM PROCESSOR
FORMAT MAC FRAMES INTO AN MPEG TRANSPORT STREAM. INSERT A TIMEBASE MESSAGE ON THE FIRST MAC FRAME BOUNDARY AFTER A TIMESTAMP SEND REQUEST OCCURS.
TIMING OFFSET MESSAGES ARE INCLUDED IN THE DOWNSTREAM FLOW
DOWNSTREAM DATA QUEUE
24
53
55
51
DS BIT CLOCK
DS DATA
DOWNSTREAM MODULATOR

FIG. 6C

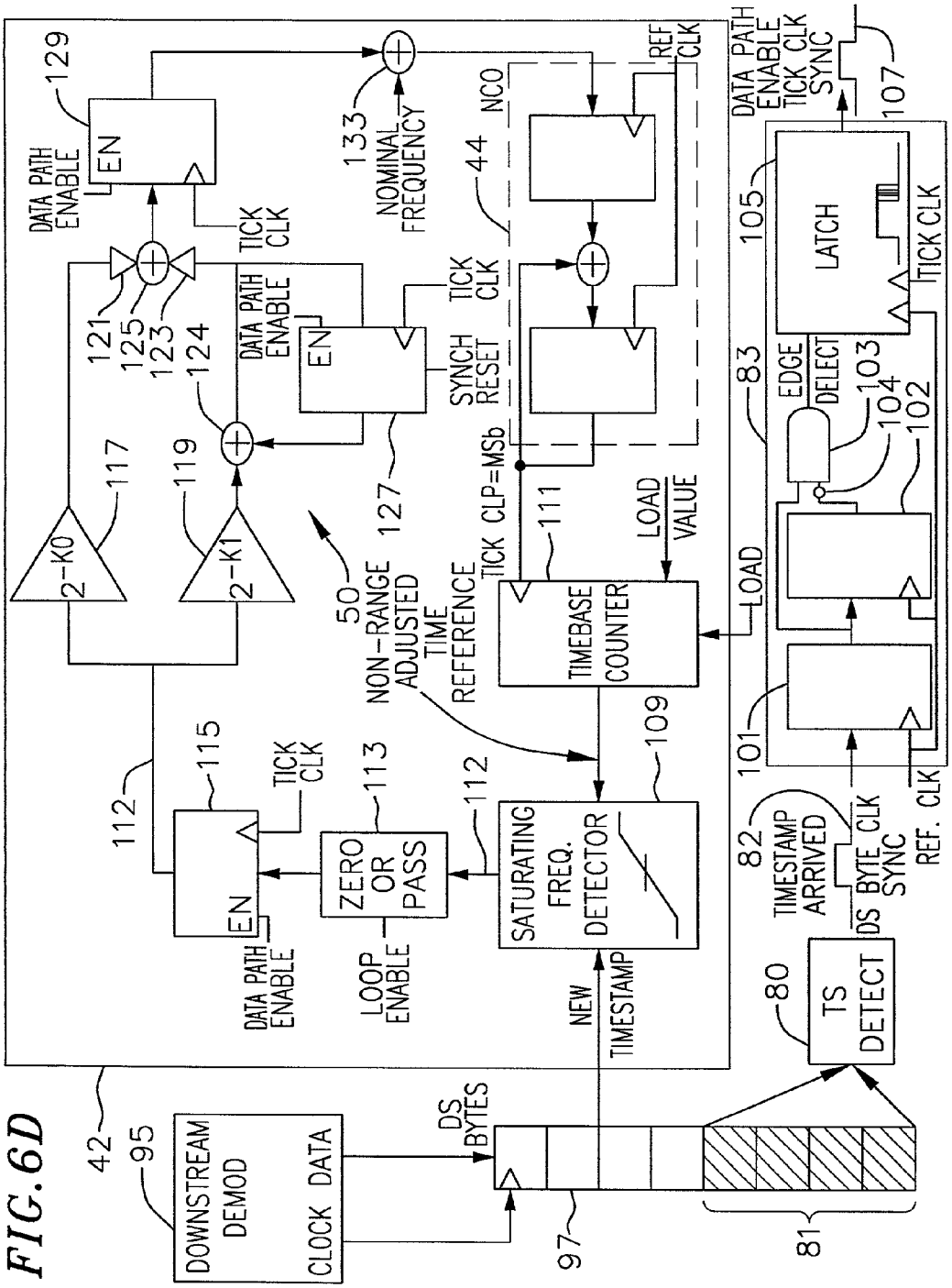
DOWNSTREAM DEMOD
CLOCK DATA
DS BYTES
TS DETECT
TIMESTAMP ARRIVED
DS BYTE CLK SYNC
REF. CLK
SATURATING FREQ. DETECTOR
ZERO OR PASS
LOOP ENABLE
NEW TIMESTAMP
TIMEBASE COUNTER
LOAD VALUE
LOAD
TICK CLP=MSb
NON-RANGE ADJUSTED TIME REFERENCE
2-K0
2-K1
DATA PATH ENABLE
EN
TICK CLK
SYNCH RESET
NOMINAL FREQUENCY
NCO
REF CLK
LATCH
EDGE DELECT
DATA PATH ENABLE TICK CLK SYNC
42
50
44
80
81
82
83
95
97
101
102
103
104
105
107
109
111
112
113
115
117
119
121
123
124
125
127
129
133

FIG. 6D

FIG.6E

UPDATE RATE	COARSE COEFFS	FINE COEFFICIENTS
1kHz(1ms)	$K0=2^{-11}$ $K1=2^{-15}$ (BW=50Hz)	$K0=2^{-16}$ $K1=2^{-25}$ (BW=1Hz)
300Hz(3.3ms)	$K0=2^{-12}$ $K1=2^{-15}$ (BW=20Hz)	$K0=2^{-16}$ $K1=2^{-23}$ (BW=1Hz)
100Hz(10ms)	$K0=2^{-13}$ $K1=2^{-16}$ (BW=10Hz)	$K0=2^{-16}$ $K1=2^{-22}$ (BW=1Hz)
50Hz(20ms)	$K0=2^{-14}$ $K1=2^{-17}$ (BW=5Hz)	$K0=2^{-16}$ $K1=2^{-21}$ (BW=1Hz)
30Hz(33ms)	$K0=2^{-15}$ $K1=2^{-18}$ (BW=3Hz)	$K0=2^{-17}$ $K1=2^{-21}$ (BW=1Hz)
10Hz(100ms)	$K0=2^{-17}$ $K1=2^{-20}$ (BW=1Hz)	$K0=2^{-17}$ $K1=2^{-20}$ (BW=1Hz)
5Hz(200ms)	$K0=2^{-18}$ $K1=2^{-20}$ (BW=1Hz)	$K0=2^{-18}$ $K1=2^{-20}$ (BW=1Hz)

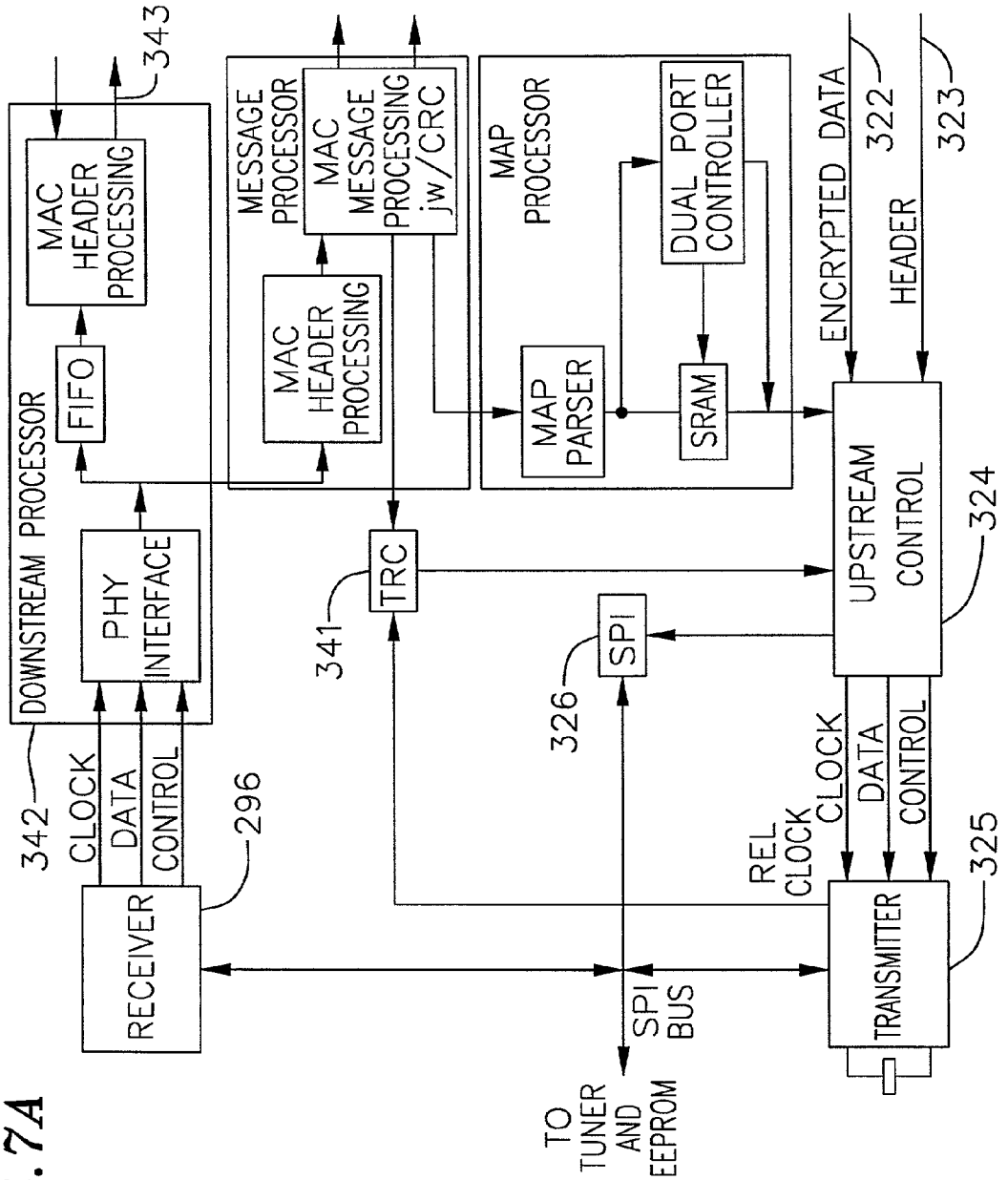
DOWNSTREAM PROCESSOR
342
343
MAC HEADER PROCESSING
FIFO
PHY INTERFACE
CLOCK
DATA
CONTROL
296
RECEIVER
MESSAGE PROCESSOR
MAC MESSAGE PROCESSING jw/CRC
MAC HEADER PROCESSING
TRC
341
MAP PROCESSOR
MAP PARSER
DUAL PORT CONTROLLER
SRAM
SPI
326
SPI BUS
TO TUNER AND EEPROM
ENCRYPTED DATA
HEADER
322
323
UPSTREAM CONTROL
324
REL CLOCK
CLOCK
DATA
CONTROL
TRANSMITTER
325

FIG. 7A

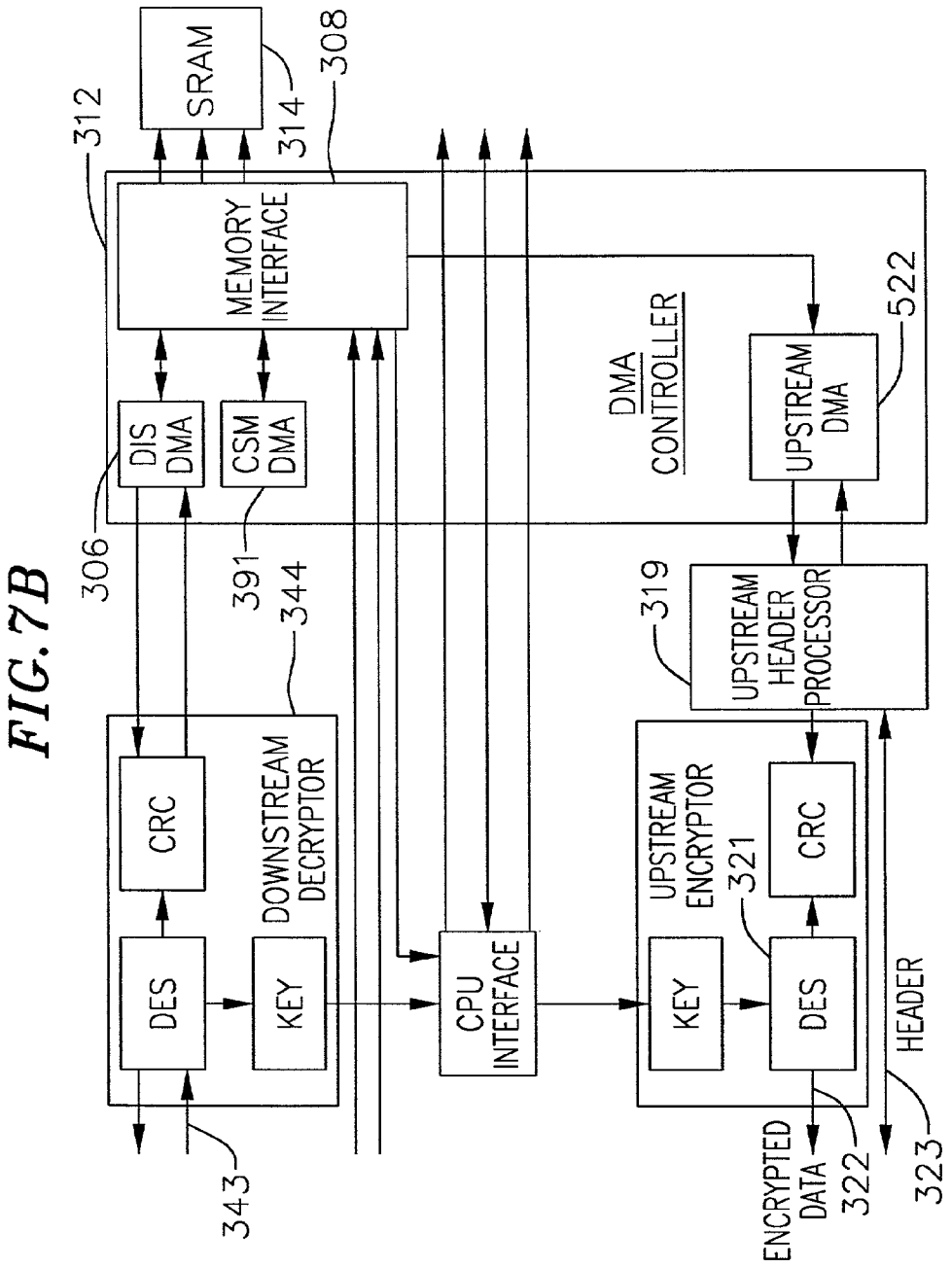
SRAM
312
314
308
MEMORY INTERFACE
DIS DMA
CSM DMA
306
391
344
DMA CONTROLLER
UPSTREAM DMA
522
319
UPSTREAM HEADER PROCESSOR
CRC
DES
KEY
DOWNSTREAM DECRYPTOR
343
CPU INTERFACE
UPSTREAM ENCRYPTOR
321
KEY
DES
CRC
ENCRYPTED DATA
322
HEADER
323

FIG. 7B

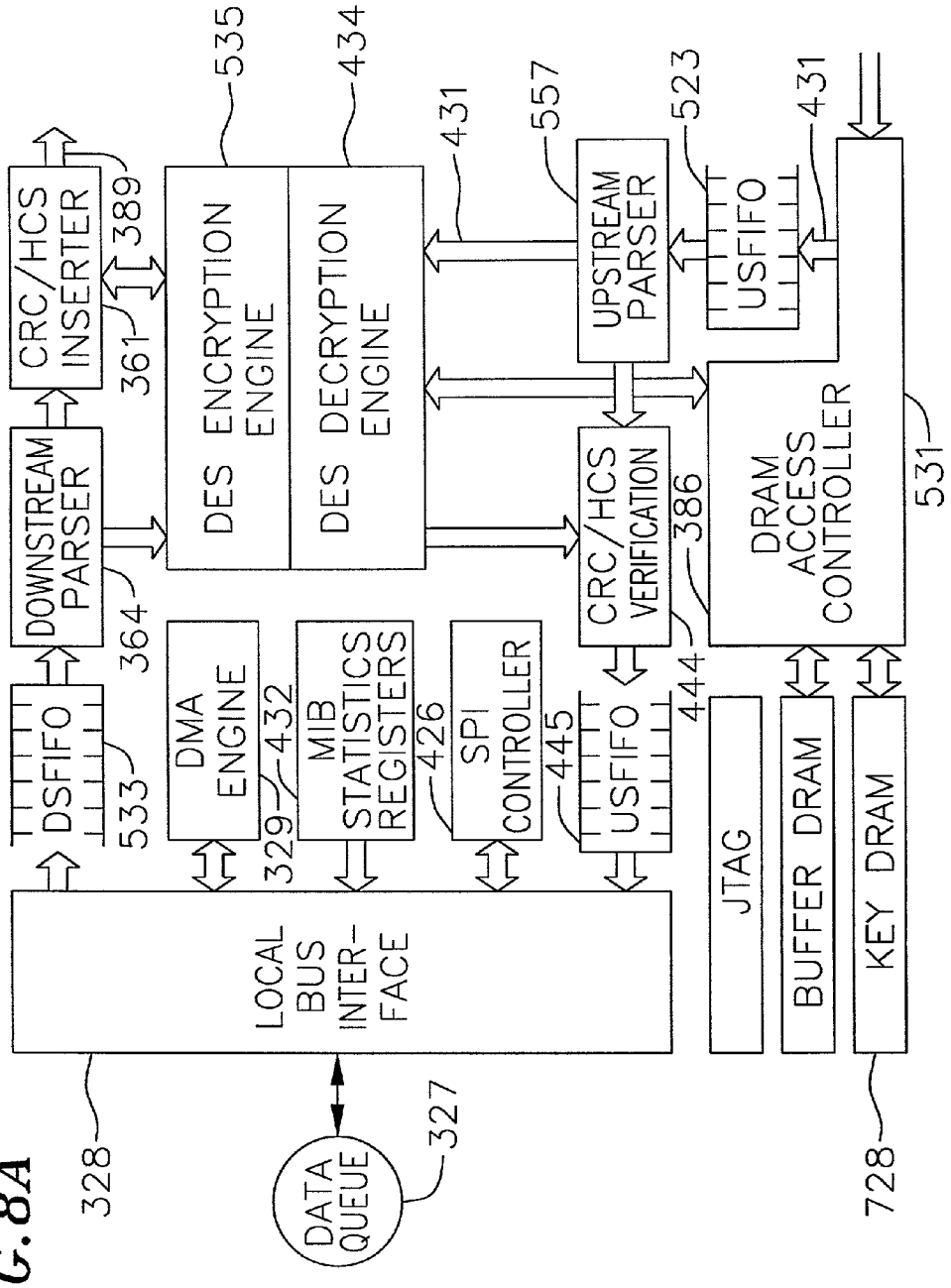
CRC/HCS INSERTER
389
361
DOWNSTREAM PARSER
364
DSFIFO
533
535
DES ENCRYPTION ENGINE
434
DES DECRYPTION ENGINE
431
557
UPSTREAM PARSER
523
USFIFO
431
CRC/HCS VERIFICATION
386
DRAM ACCESS CONTROLLER
531
DMA ENGINE
432
329
MIB STATISTICS REGISTERS
426
SPI CONTROLLER
445
USFIFO
444
JTAG
BUFFER DRAM
KEY DRAM
LOCAL BUS INTER-FACE
328
DATA QUEUE
327
728

FIG. 8A

FIG. 8B

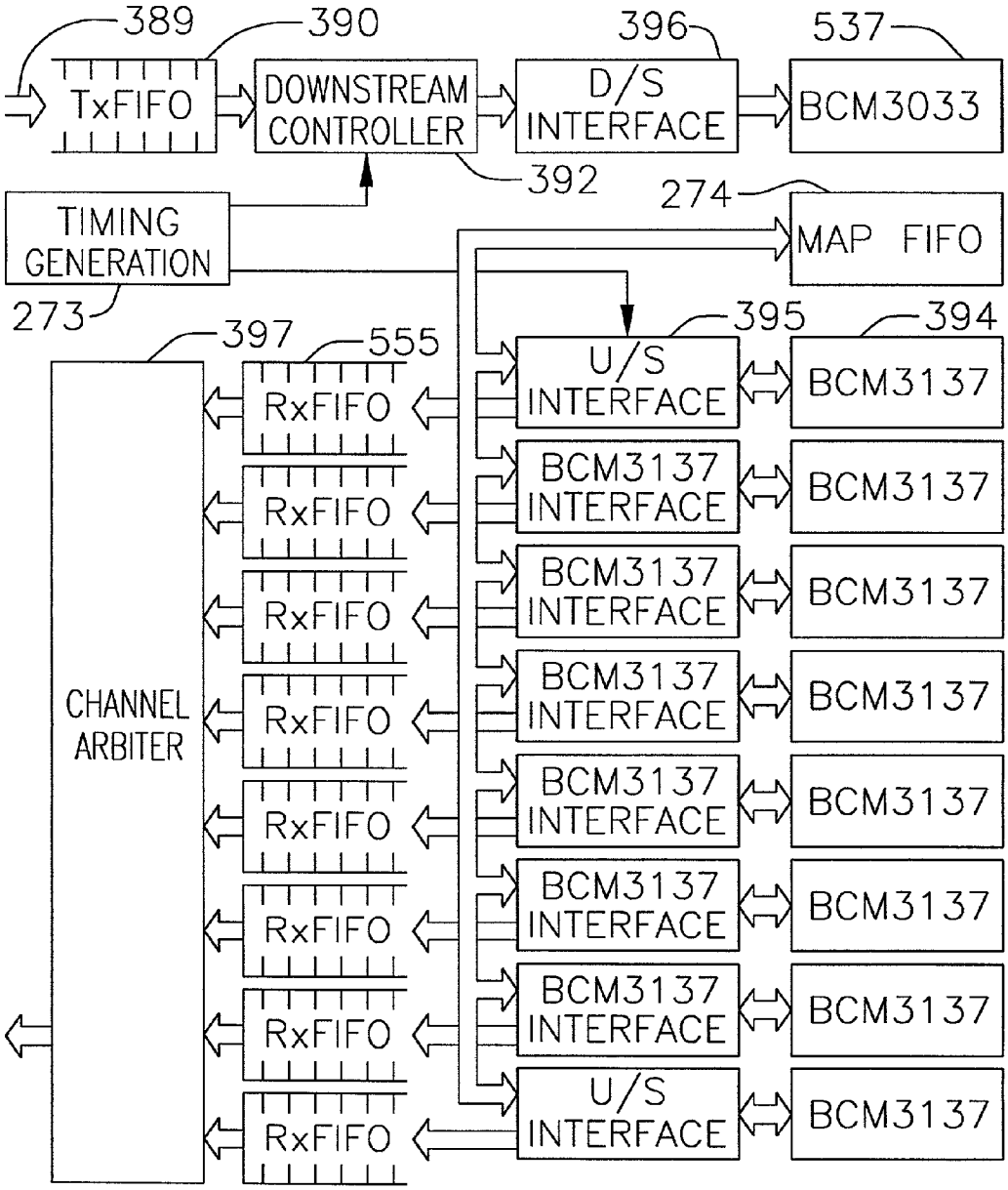
389
390
396
537
TxFIFO
DOWNSTREAM CONTROLLER
D/S INTERFACE
BCM3033
392
274
TIMING GENERATION
MAP FIFO
273
397
555
395
394
CHANNEL ARBITER
RxFIFO
U/S INTERFACE
BCM3137
BCM3137 INTERFACE
BCM3137
U/S INTERFACE

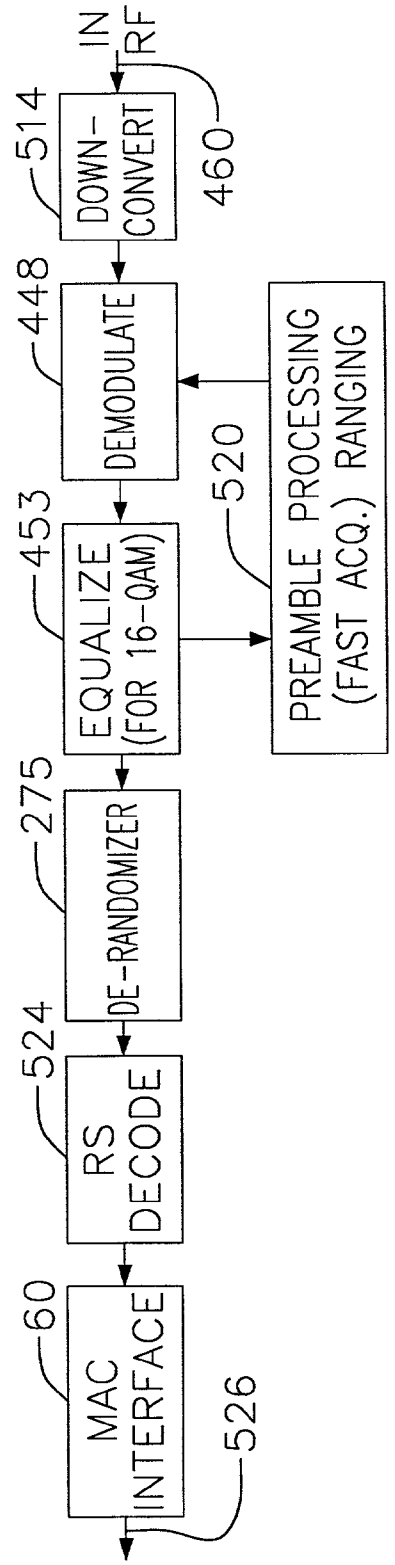
IN
RF
460
514
DOWN-CONVERT
448
DEMODULATE
453
EQUALIZE (FOR 16-QAM)
520
PREAMBLE PROCESSING (FAST ACQ.) RANGING
275
DE-RANDOMIZER
524
RS DECODE
60
MAC INTERFACE
526

FIG. 9

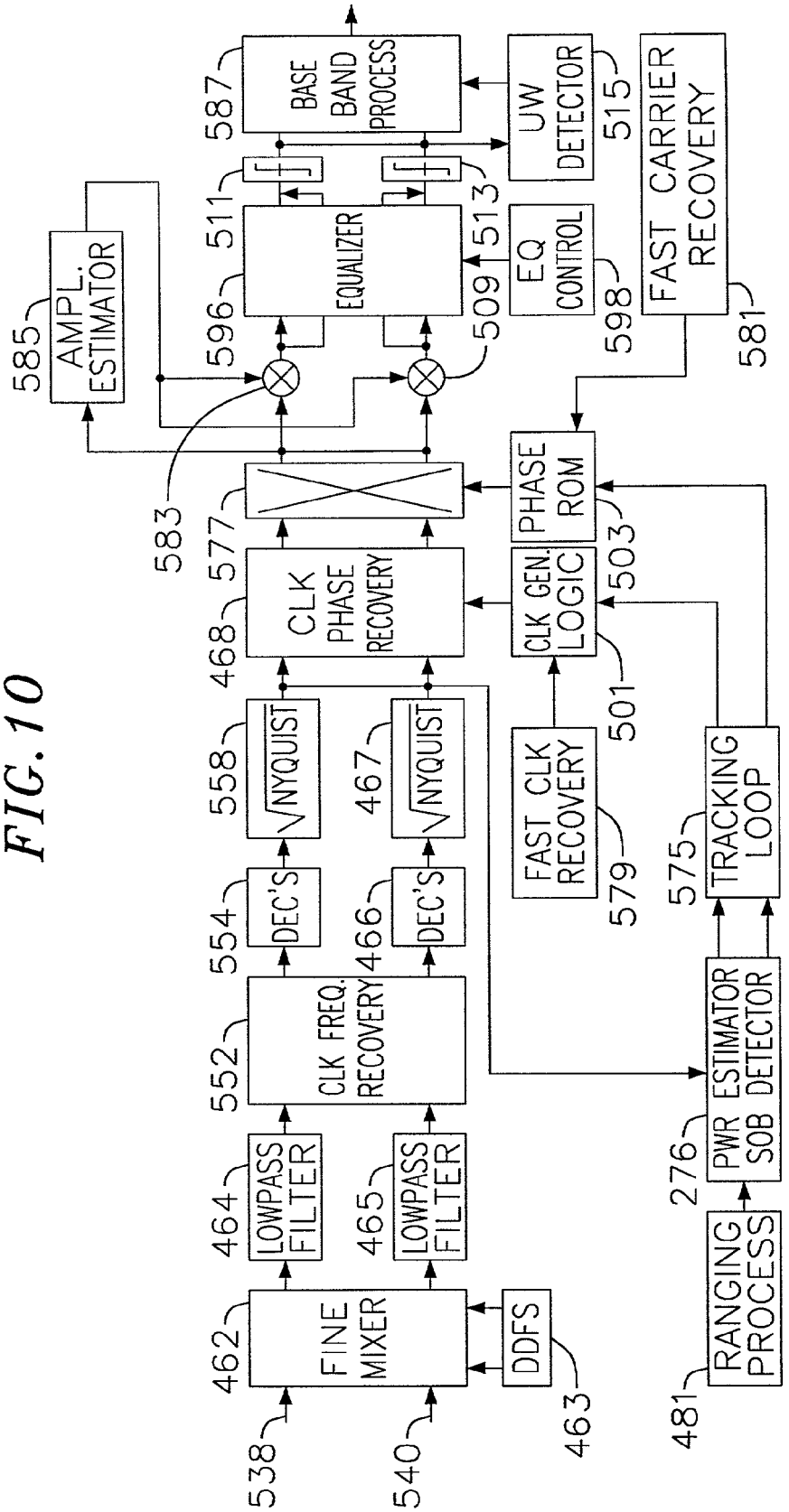
538
540
462
FINE MIXER
463
DDFS
464
LOWPASS FILTER
465
LOWPASS FILTER
552
CLK FREQ. RECOVERY
554
DEC'S
466
DEC'S
558
√NYQUIST
467
√NYQUIST
468
CLK PHASE RECOVERY
577
583
596
EQUALIZER
509
511
513
587
BASE BAND PROCESS
585
AMPL. ESTIMATOR
501
CLK GEN. LOGIC
503
PHASE ROM
579
FAST CLK RECOVERY
575
TRACKING LOOP
276
PWR ESTIMATOR SOB DETECTOR
481
RANGING PROCESS
515
UW DETECTOR
598
EQ CONTROL
581
FAST CARRIER RECOVERY

FIG. 10

FIG. 11

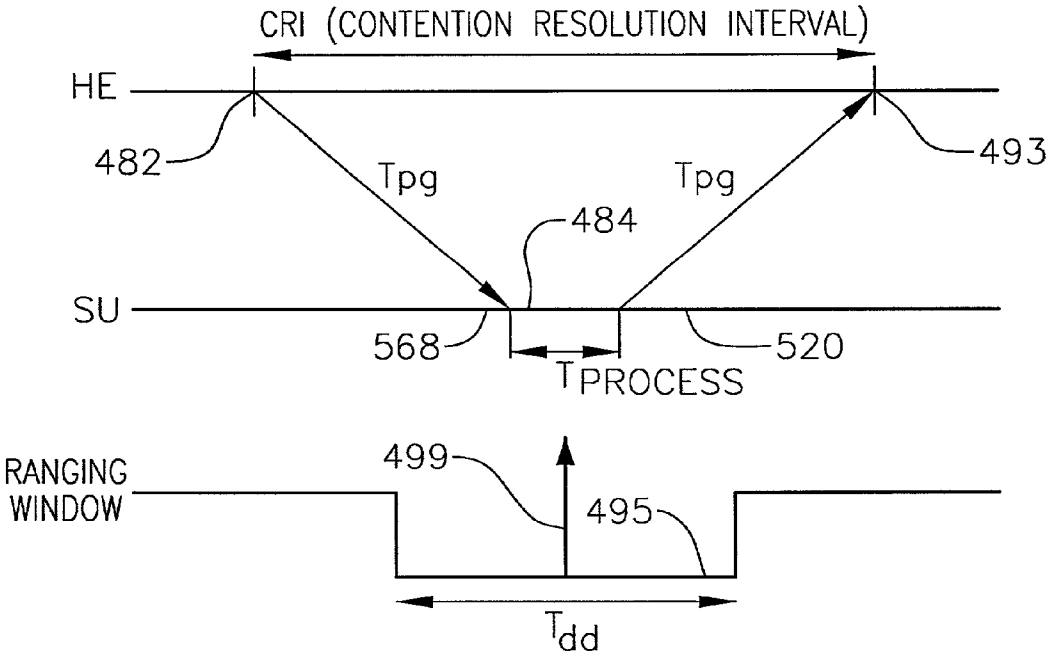
CRI (CONTENTION RESOLUTION INTERVAL)
HE
482
493
Tpg
Tpg
484
SU
568
520
TPROCESS
RANGING WINDOW
499
495
Tdd

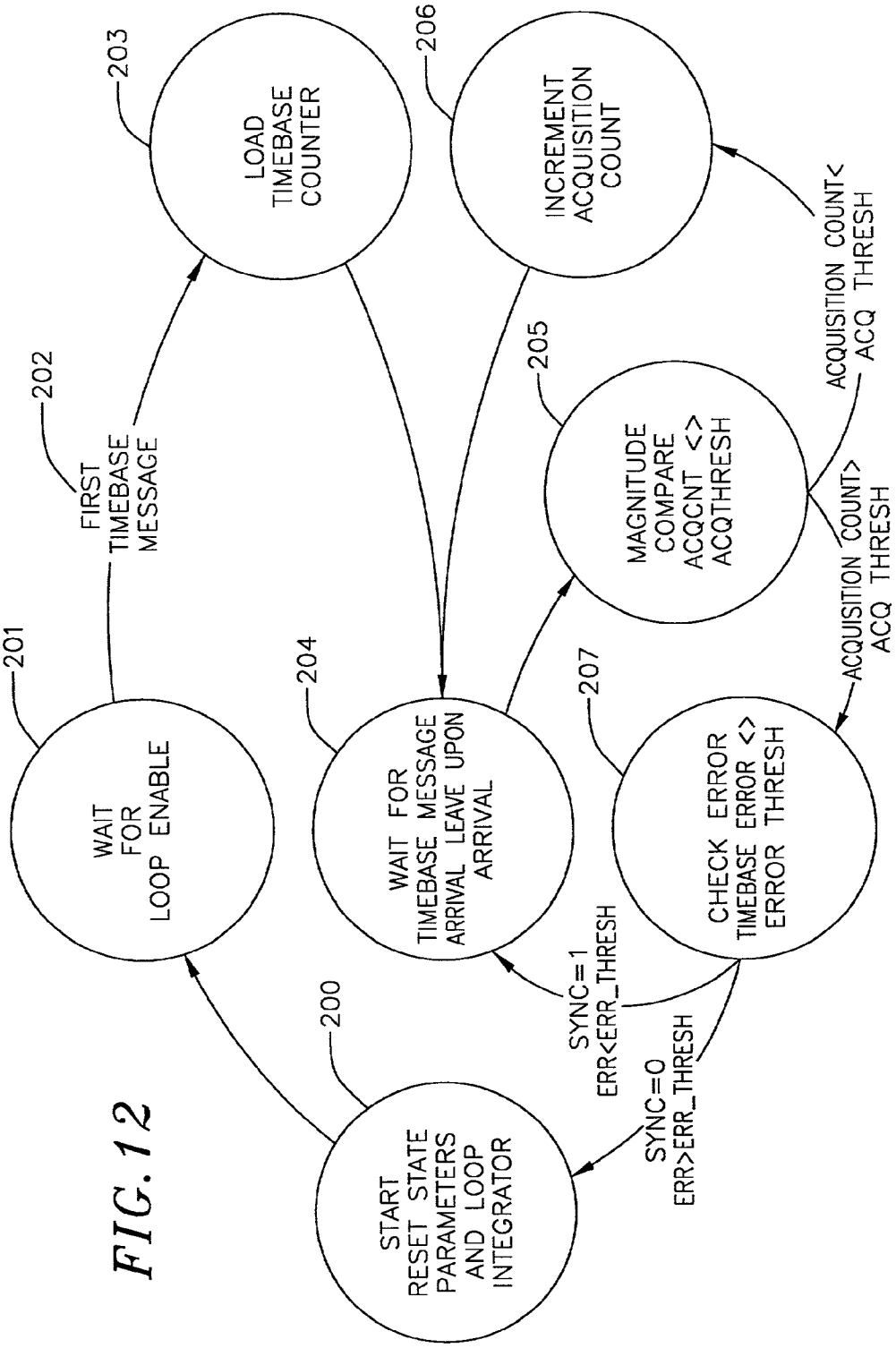
200
START
RESET STATE
PARAMETERS
AND LOOP
INTEGRATOR
201
WAIT
FOR
LOOP ENABLE
202
FIRST
TIMEBASE
MESSAGE
203
LOAD
TIMEBASE
COUNTER
204
WAIT FOR
TIMEBASE MESSAGE
ARRIVAL LEAVE UPON
ARRIVAL
205
MAGNITUDE
COMPARE
ACQCNT <>
ACQTHRESH
206
INCREMENT
ACQUISITION
COUNT
207
CHECK ERROR
TIMEBASE ERROR <>
ERROR THRESH
SYNC=1
ERR<ERR_THRESH
SYNC=0
ERR>ERR_THRESH
ACQUISITION COUNT<
ACQ THRESH
ACQUISITION COUNT>
ACQ THRESH

FIG. 12

FIG. 13

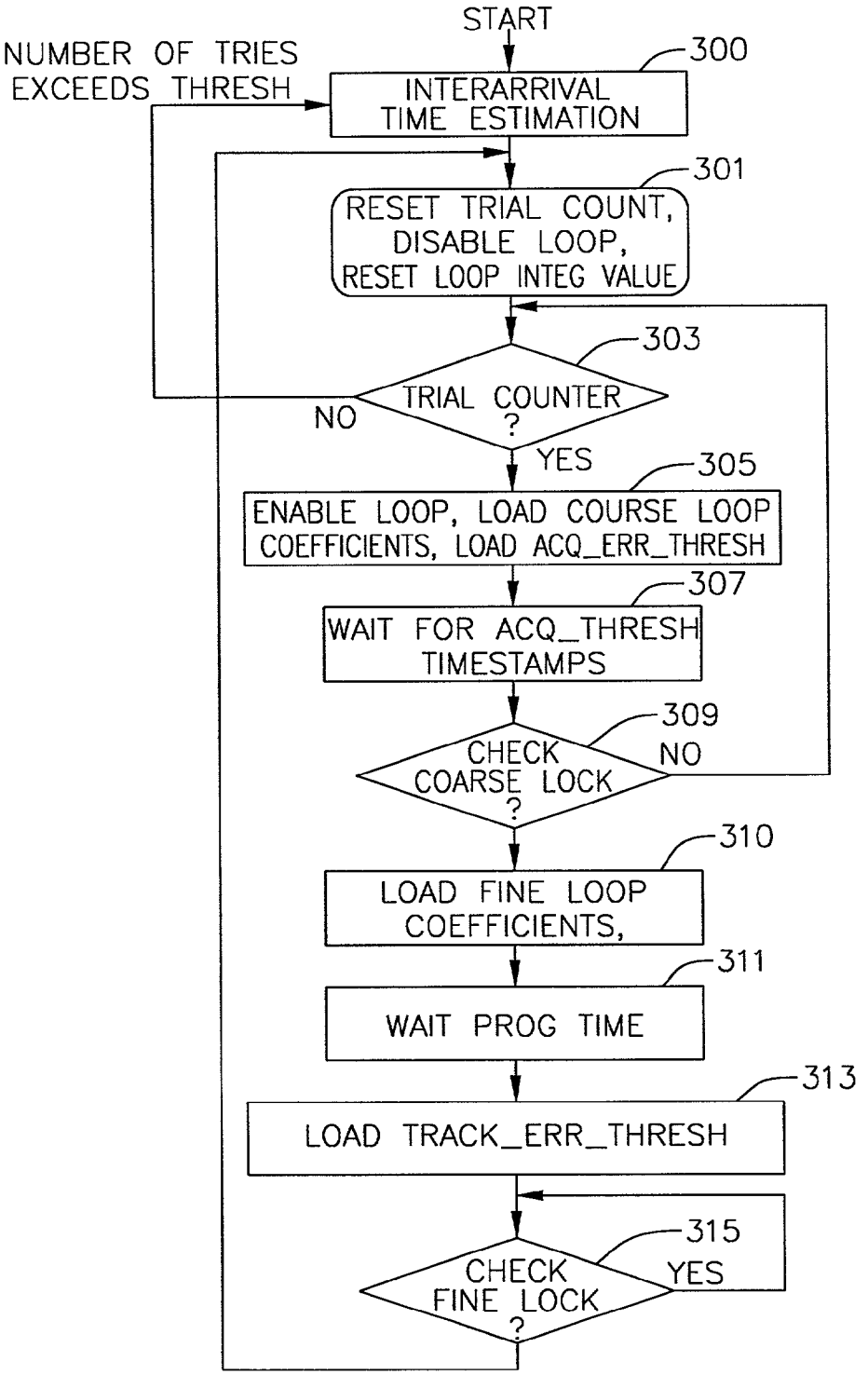
START
NUMBER OF TRIES EXCEEDS THRESH
300
INTERARRIVAL TIME ESTIMATION
301
RESET TRIAL COUNT, DISABLE LOOP, RESET LOOP INTEG VALUE
303
TRIAL COUNTER ?
NO
YES
305
ENABLE LOOP, LOAD COURSE LOOP COEFFICIENTS, LOAD ACQ_ERR_THRESH
307
WAIT FOR ACQ_THRESH TIMESTAMPS
309
CHECK COARSE LOCK ?
NO
310
LOAD FINE LOOP COEFFICIENTS,
311
WAIT PROG TIME
313
LOAD TRACK_ERR_THRESH
315
CHECK FINE LOCK ?
YES

FIG. 14

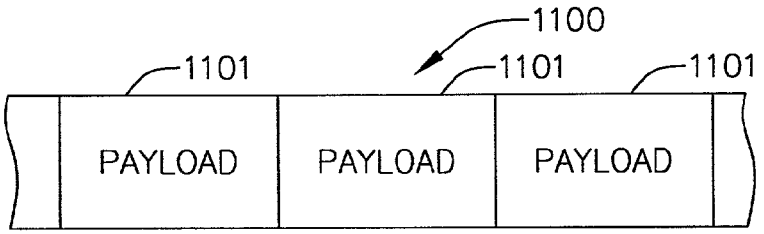

FIG. 15

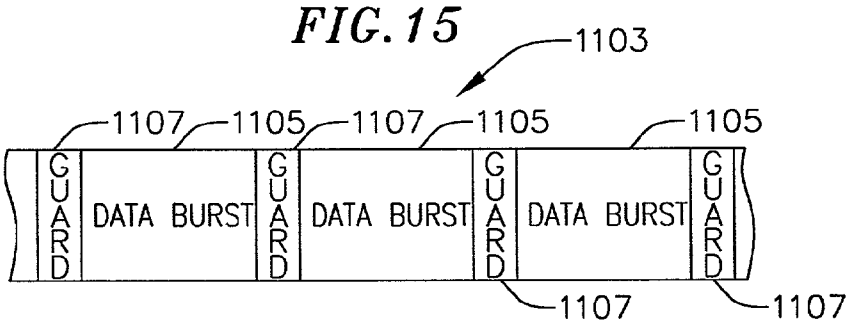

FIG. 16

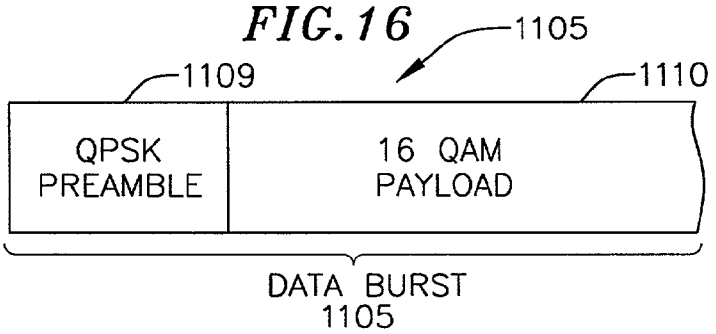

FIG. 17

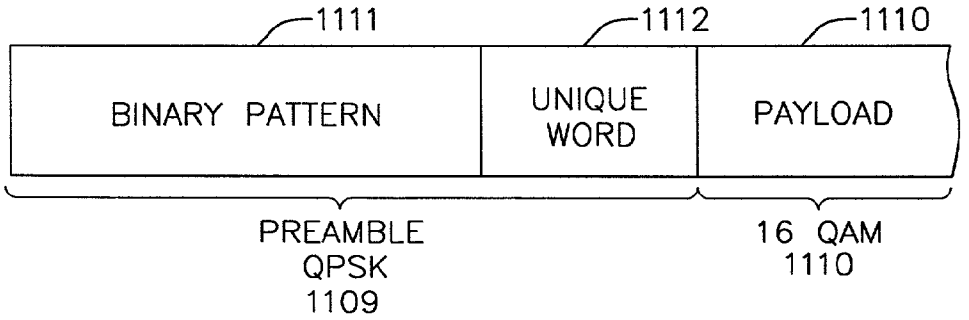

FIG. 18

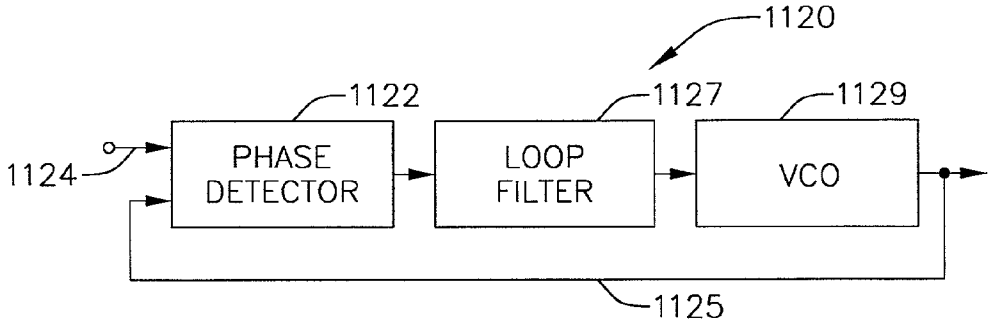

FIG. 19

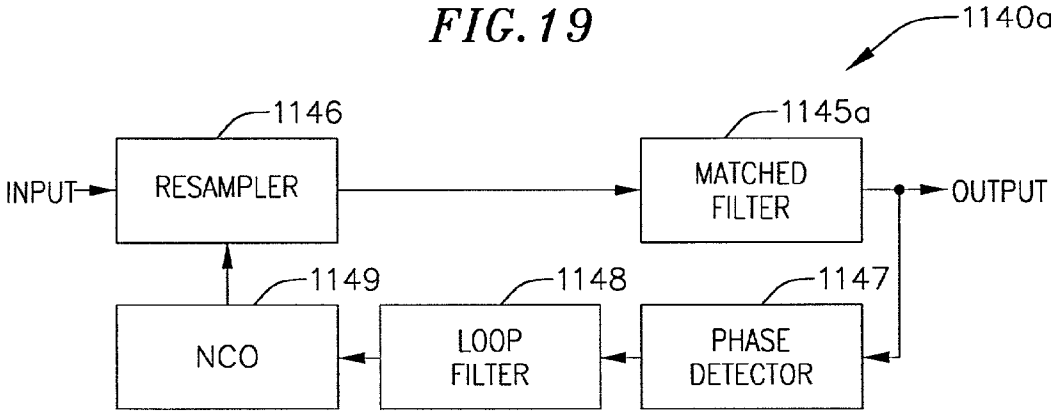

FIG. 20

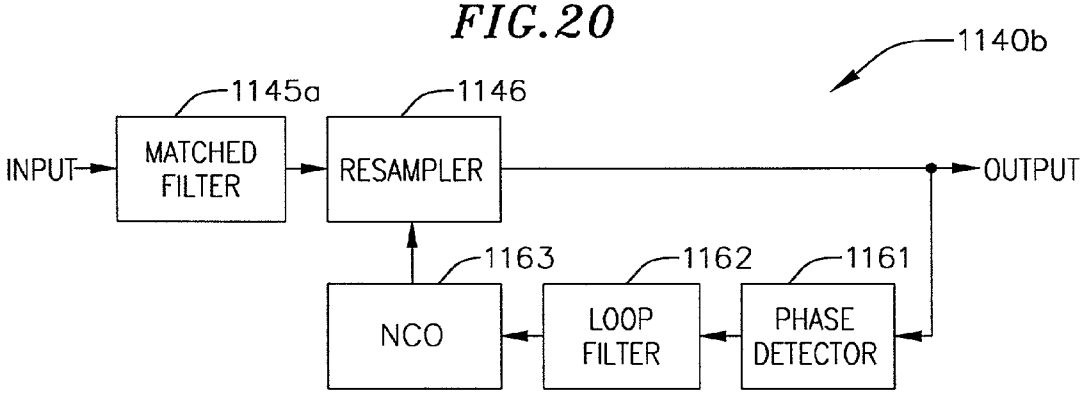

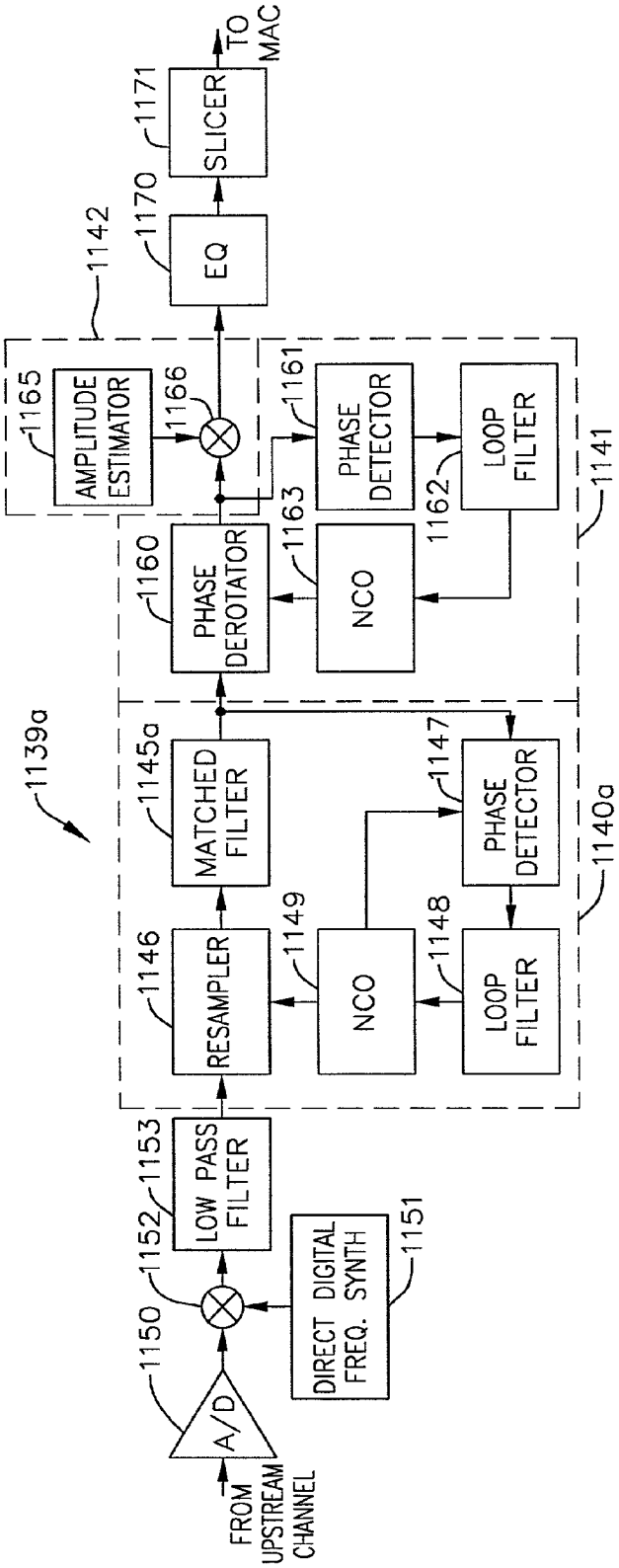
1139a
FROM UPSTREAM CHANNEL
A/D
1150
1152
1153
LOW PASS FILTER
DIRECT DIGITAL FREQ. SYNTH
1151
1146
RESAMPLER
1145a
MATCHED FILTER
1149
NCO
1148
LOOP FILTER
1147
PHASE DETECTOR
1140a
1160
PHASE DEROTATOR
1163
NCO
1162
LOOP FILTER
1161
PHASE DETECTOR
1141
1165
AMPLITUDE ESTIMATOR
1166
1142
1170
EQ
1171
SLICER
TO MAC

FIG. 21

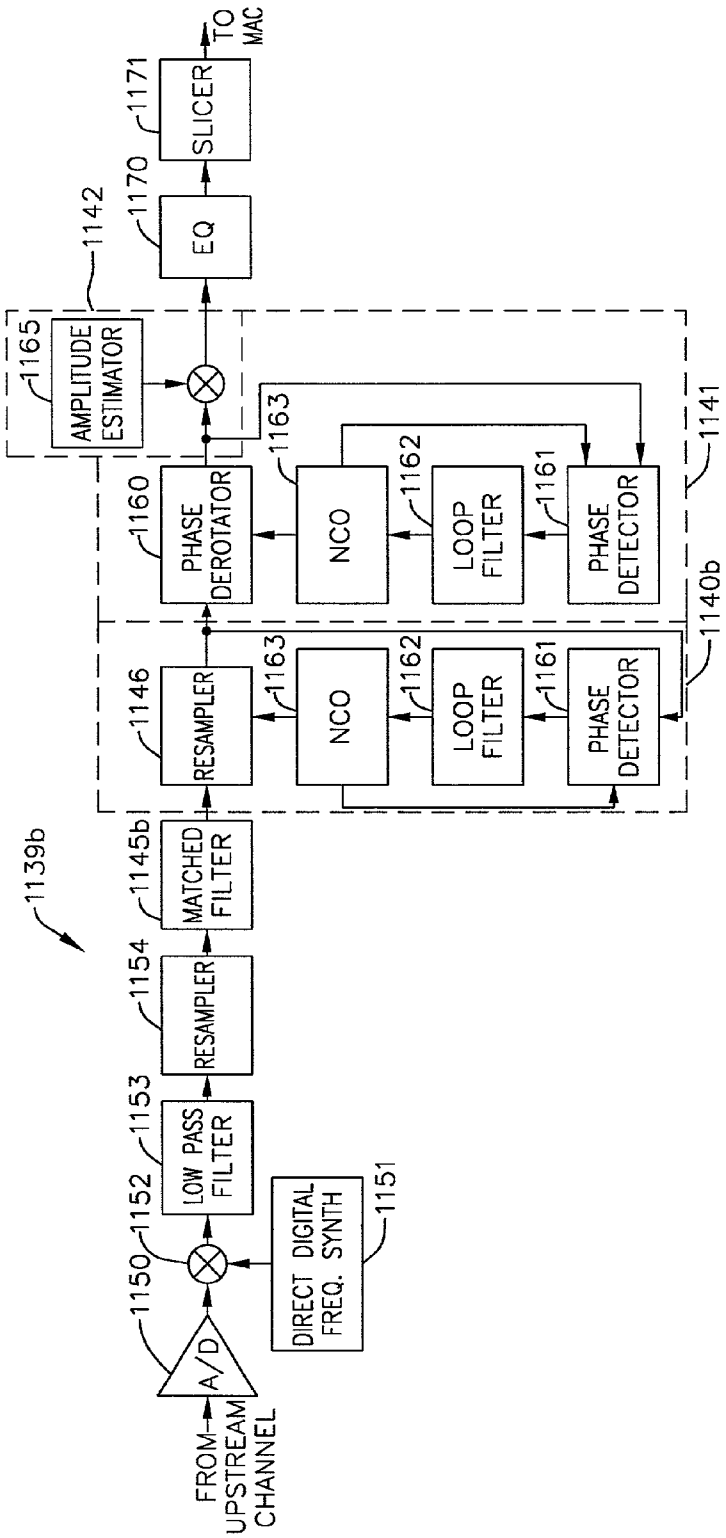
1139b
FROM UPSTREAM CHANNEL
A/D
1150
1152
1153
LOW PASS FILTER
1154
RESAMPLER
1145b
MATCHED FILTER
DIRECT DIGITAL FREQ. SYNTH
1151
1146
RESAMPLER
1163
NCO
1162
LOOP FILTER
1161
PHASE DETECTOR
1140b
1160
PHASE DEROTATOR
1163
NCO
1162
LOOP FILTER
1161
PHASE DETECTOR
1141
1165
AMPLITUDE ESTIMATOR
1142
1170
EQ
1171
SLICER
TO MAC

FIG. 22

FIG.23

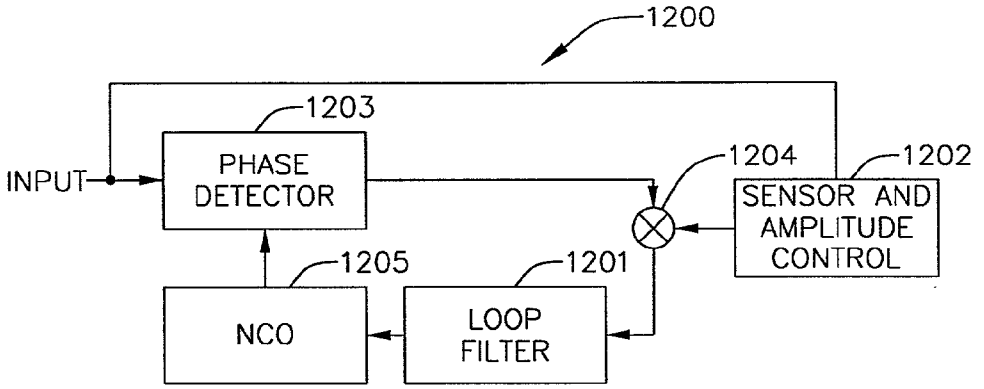
1200
1203
INPUT
PHASE DETECTOR
1204
1202
SENSOR AND AMPLITUDE CONTROL
1205
1201
NCO
LOOP FILTER

FIG.24

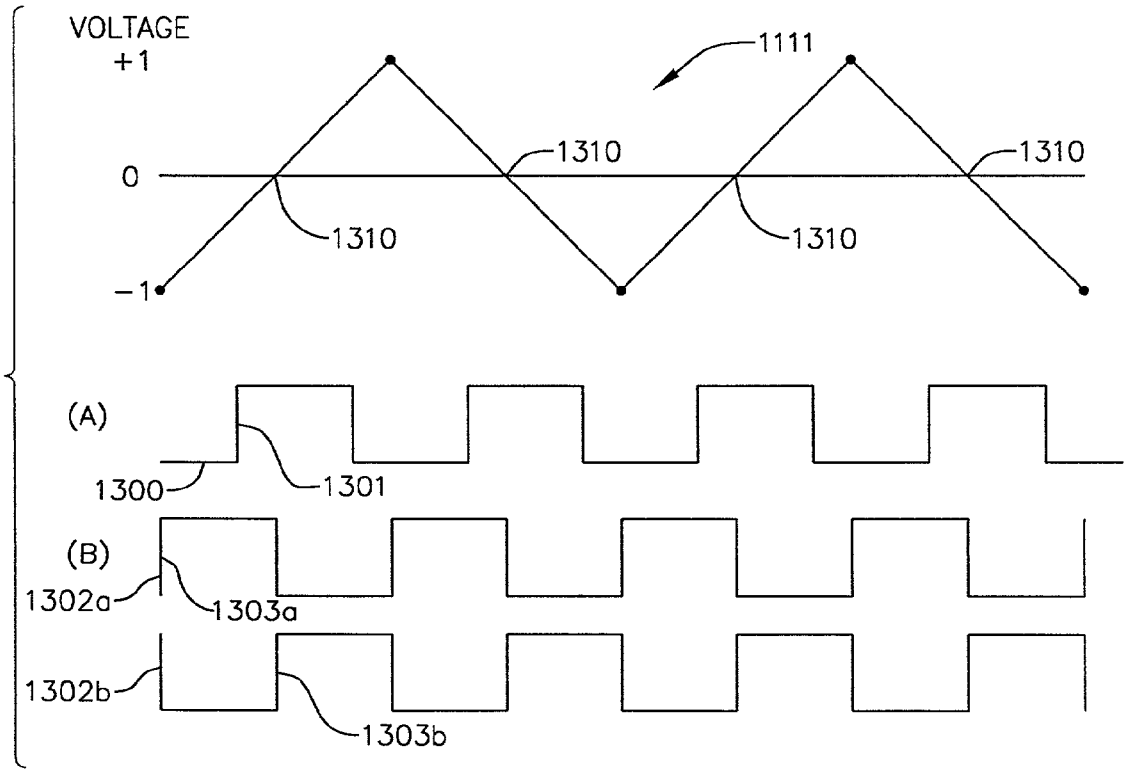
VOLTAGE
+1
0
−1
1111
1310
1310
1310
1310
(A)
1300
1301
(B)
1302a
1303a
1302b
1303b

FIG.25A

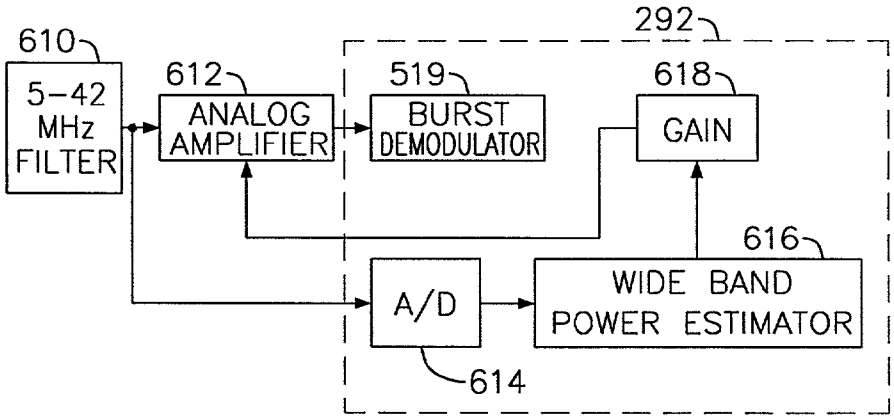

FIG.25B

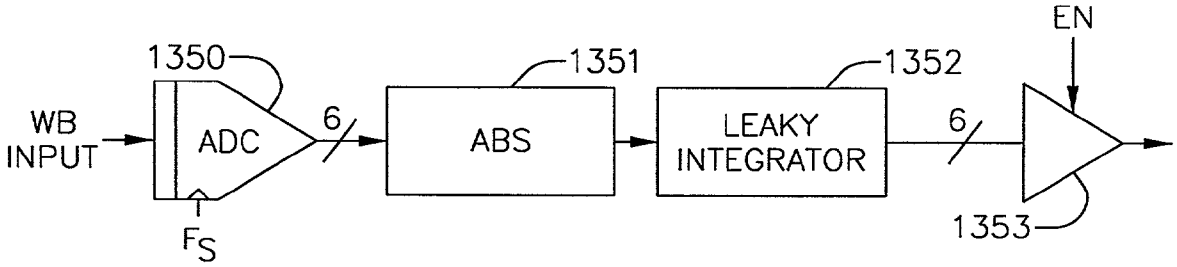

FIG.26

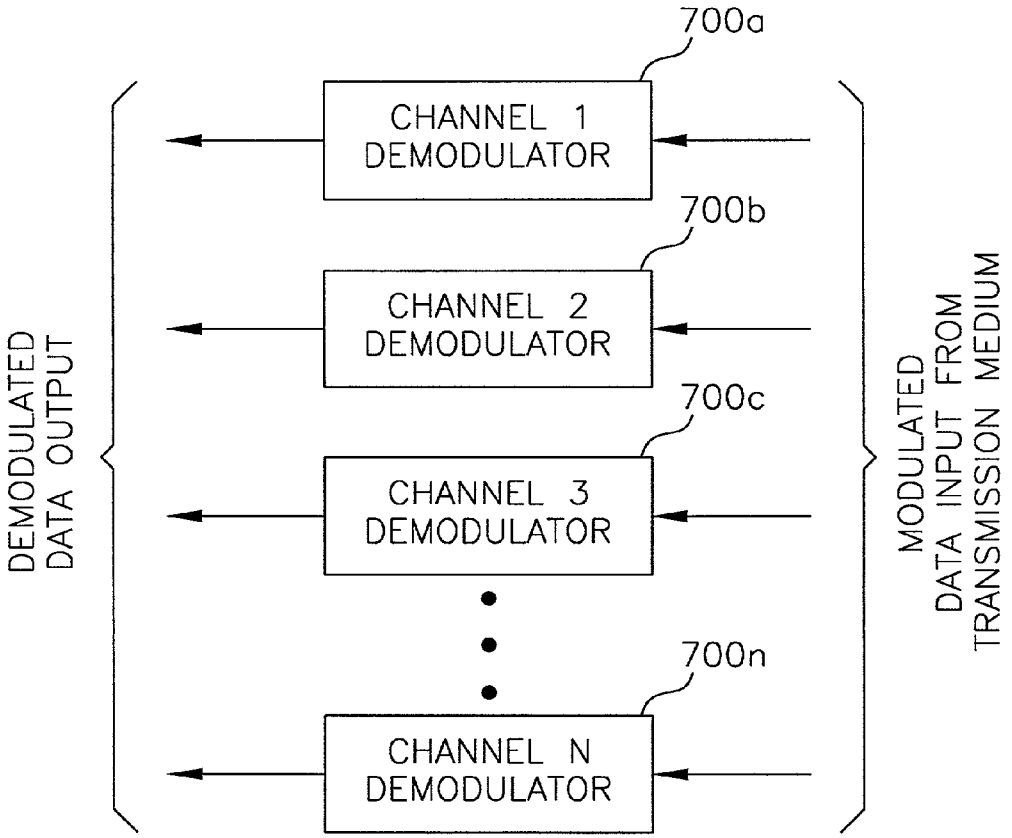
DEMODULATED DATA OUTPUT
CHANNEL 1 DEMODULATOR
700a
CHANNEL 2 DEMODULATOR
700b
CHANNEL 3 DEMODULATOR
700c
CHANNEL N DEMODULATOR
700n
MODULATED DATA INPUT FROM TRANSMISSION MEDIUM

FIG.27

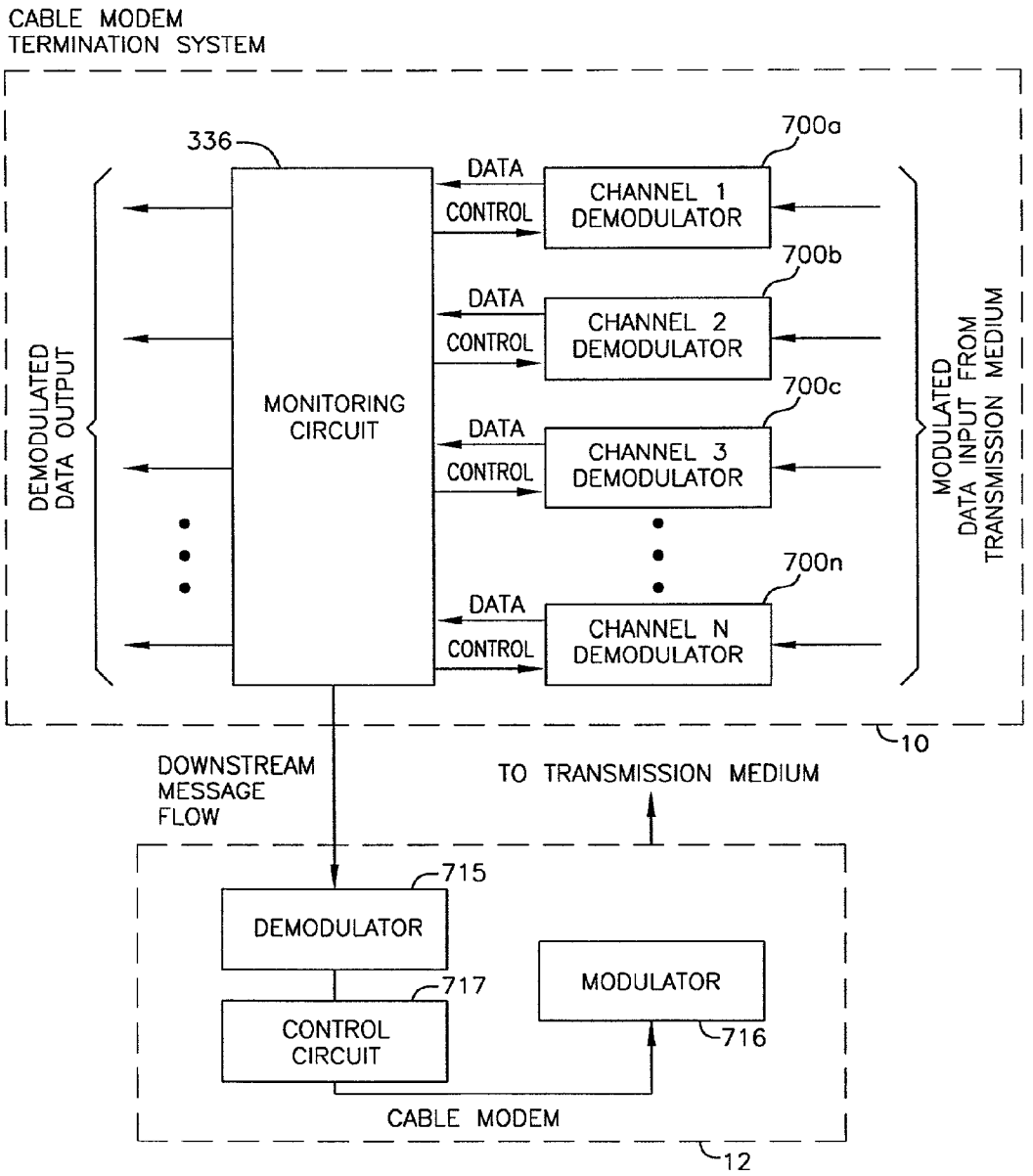
CABLE MODEM
TERMINATION SYSTEM
336
700a
DATA
CONTROL
CHANNEL 1
DEMODULATOR
700b
DATA
CONTROL
CHANNEL 2
DEMODULATOR
700c
DATA
CONTROL
CHANNEL 3
DEMODULATOR
700n
DATA
CONTROL
CHANNEL N
DEMODULATOR
MONITORING
CIRCUIT
DEMODULATED
DATA OUTPUT
MODULATED
DATA INPUT FROM
TRANSMISSION MEDIUM
10
DOWNSTREAM
MESSAGE
FLOW
TO TRANSMISSION MEDIUM
715
DEMODULATOR
717
CONTROL
CIRCUIT
MODULATOR
716
CABLE MODEM
12

FIG.28

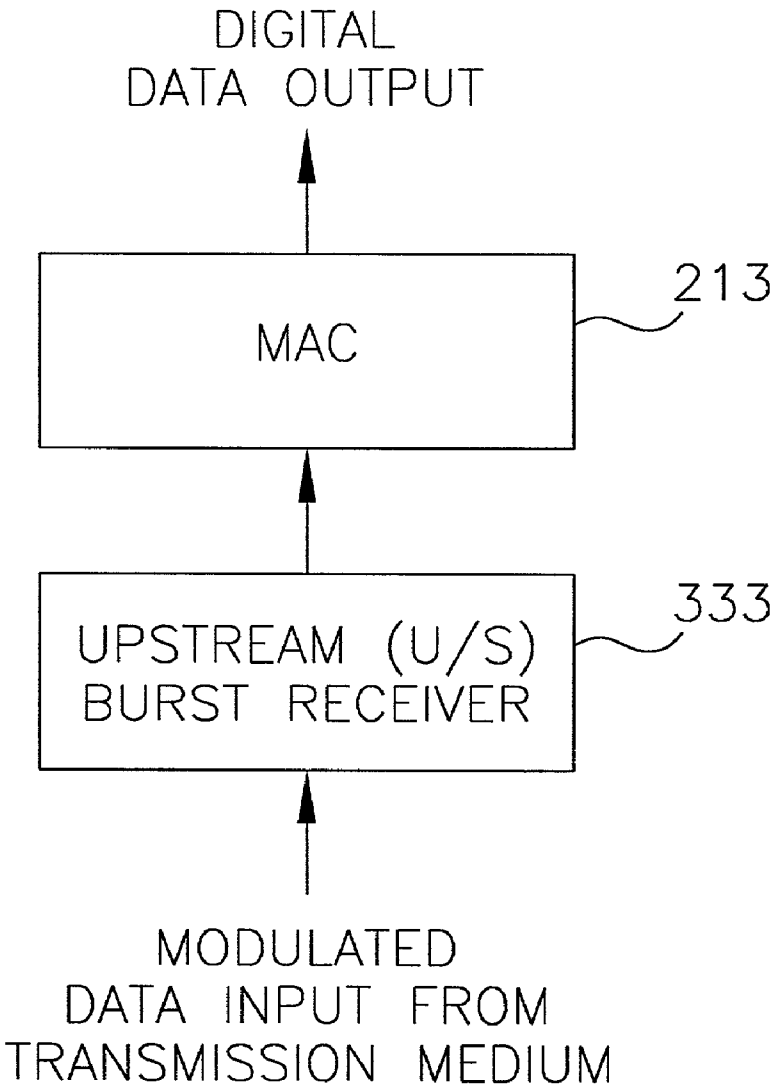
DIGITAL
DATA OUTPUT
MAC
213
UPSTREAM (U/S)
BURST RECEIVER
333
MODULATED
DATA INPUT FROM
TRANSMISSION MEDIUM

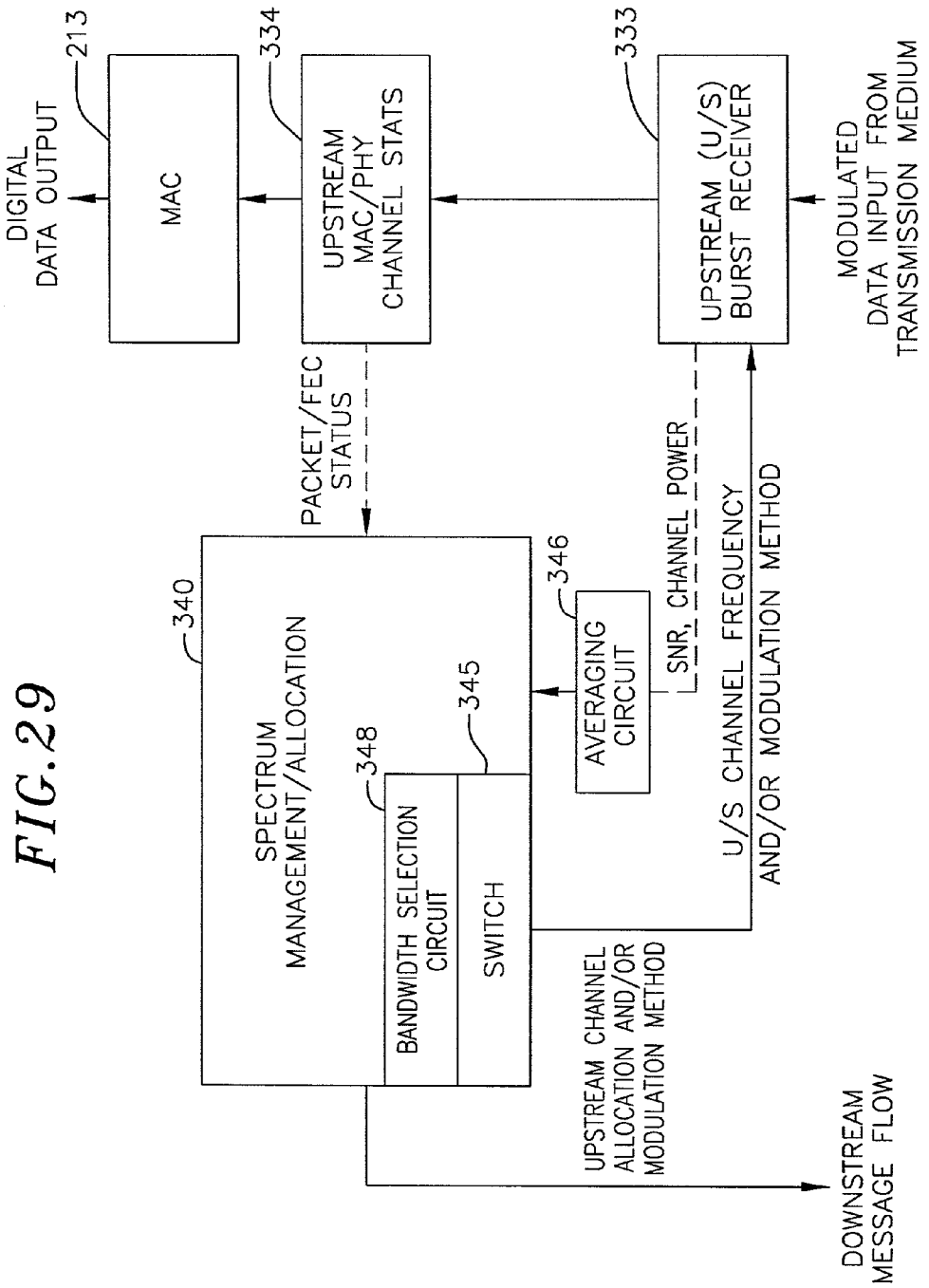
DIGITAL DATA OUTPUT
213
MAC
334
UPSTREAM MAC/PHY CHANNEL STATS
333
UPSTREAM (U/S) BURST RECEIVER
MODULATED DATA INPUT FROM TRANSMISSION MEDIUM
PACKET/FEC STATUS
340
SPECTRUM MANAGEMENT/ALLOCATION
348
BANDWIDTH SELECTION CIRCUIT
345
SWITCH
346
AVERAGING CIRCUIT
SNR, CHANNEL POWER
U/S CHANNEL FREQUENCY
AND/OR MODULATION METHOD
UPSTREAM CHANNEL ALLOCATION AND/OR MODULATION METHOD
DOWNSTREAM MESSAGE FLOW

FIG. 29

FIG. 30

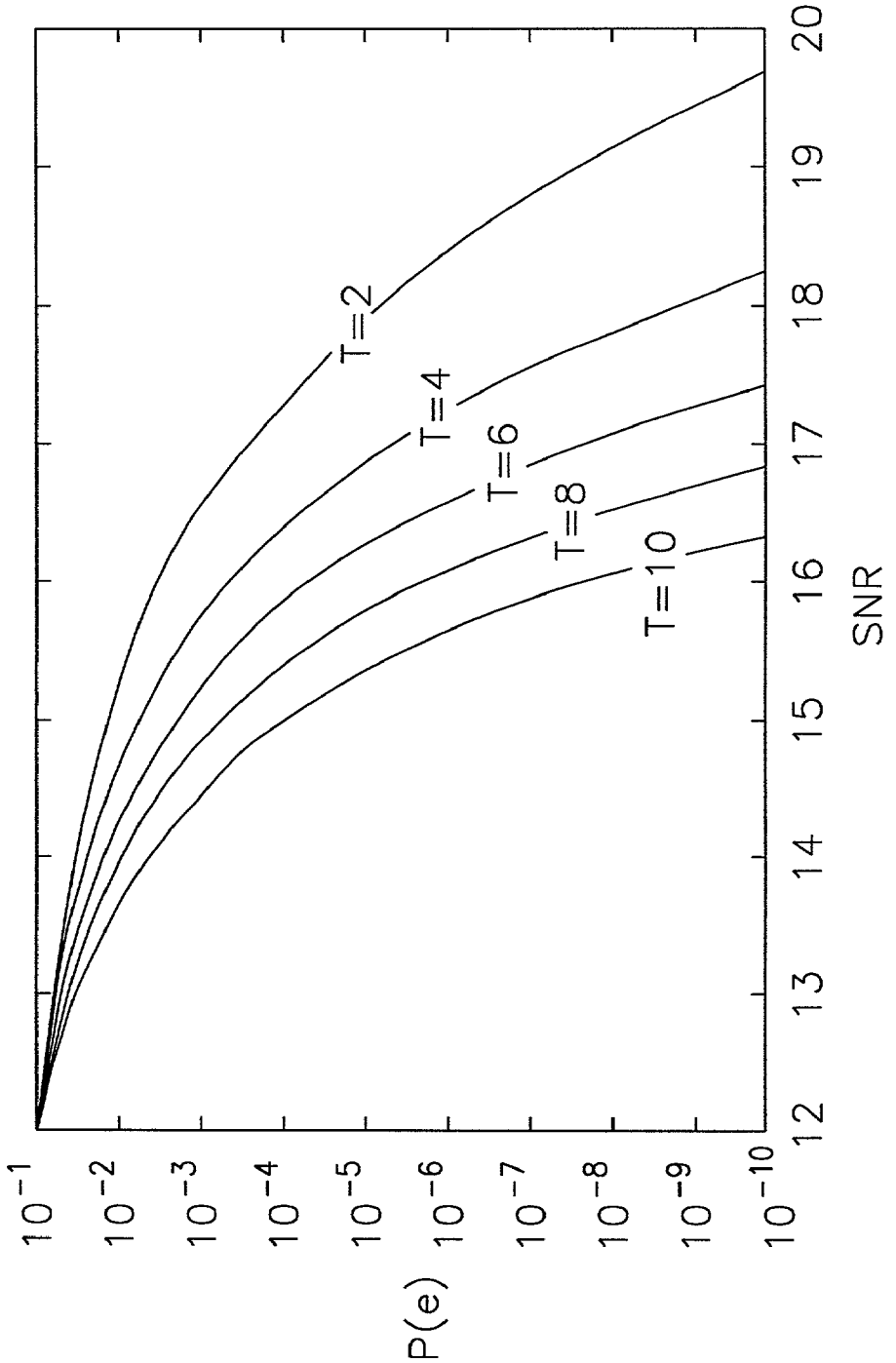
P(e)
10^{-1}
10^{-2}
10^{-3}
10^{-4}
10^{-5}
10^{-6}
10^{-7}
10^{-8}
10^{-9}
10^{-10}
12
13
14
15
16
17
18
19
20
SNR
T=2
T=4
T=6
T=8
T=10

FIG. 31

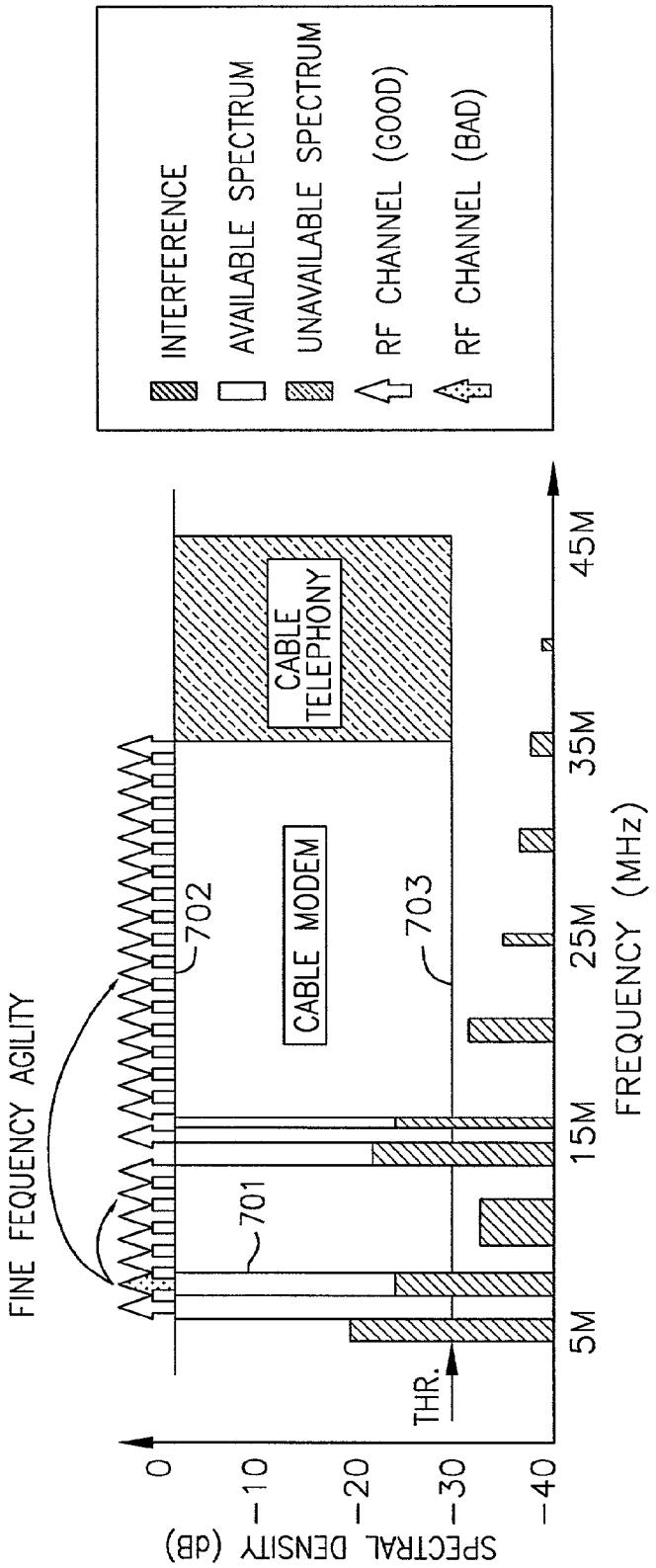
INTERFERENCE
AVAILABLE SPECTRUM
UNAVAILABLE SPECTRUM
RF CHANNEL (GOOD)
RF CHANNEL (BAD)
FINE FEQUENCY AGILITY
CABLE TELEPHONY
CABLE MODEM
702
703
701
THR.
0
-10
-20
-30
-40
SPECTRAL DENSITY (dB)
5M
15M
25M
35M
45M
FREQUENCY (MHz)

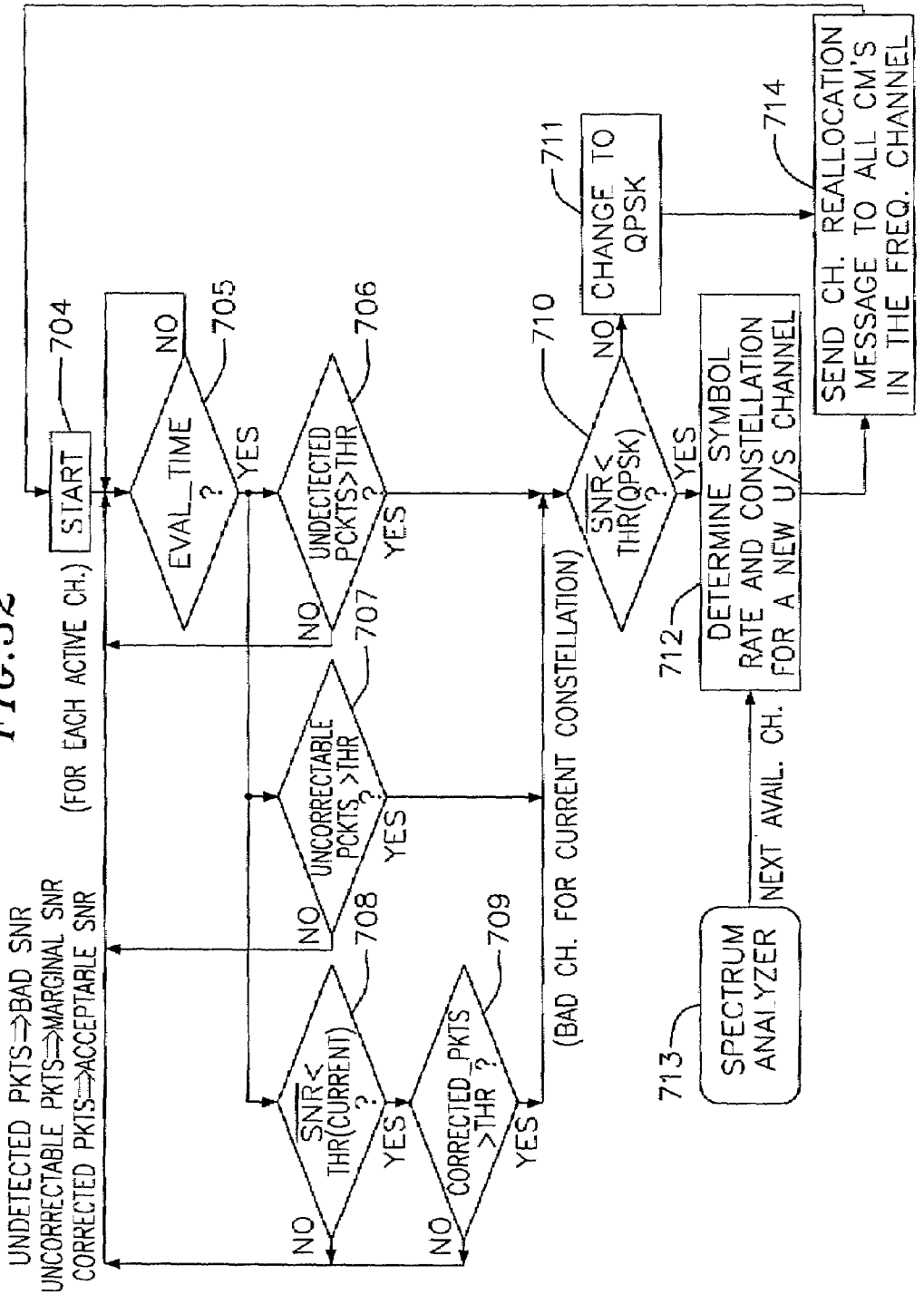
UNDETECTED PKTS⇒BAD SNR
UNCORRECTABLE PKTS⇒MARGINAL SNR
CORRECTED PKTS⇒ACCEPTABLE SNR
(FOR EACH ACTIVE CH.)
START
704
EVAL_TIME ?
705
NO
YES
UNDETECTED PCKTS>THR ?
706
NO
YES
UNCORRECTABLE PCKTS >THR ?
707
NO
YES
SNR< THR(CURRENT) ?
708
NO
YES
CORRECTED_PKTS >THR ?
709
NO
YES
(BAD CH. FOR CURRENT CONSTELLATION)
SNR< THR(QPSK) ?
710
NO
YES
CHANGE TO QPSK
711
DETERMINE SYMBOL RATE AND CONSTELLATION FOR A NEW U/S CHANNEL
712
SEND CH. REALLOCATION MESSAGE TO ALL CM'S IN THE FREQ. CHANNEL
714
SPECTRUM ANALYZER
713
NEXT AVAIL. CH.

FIG.32

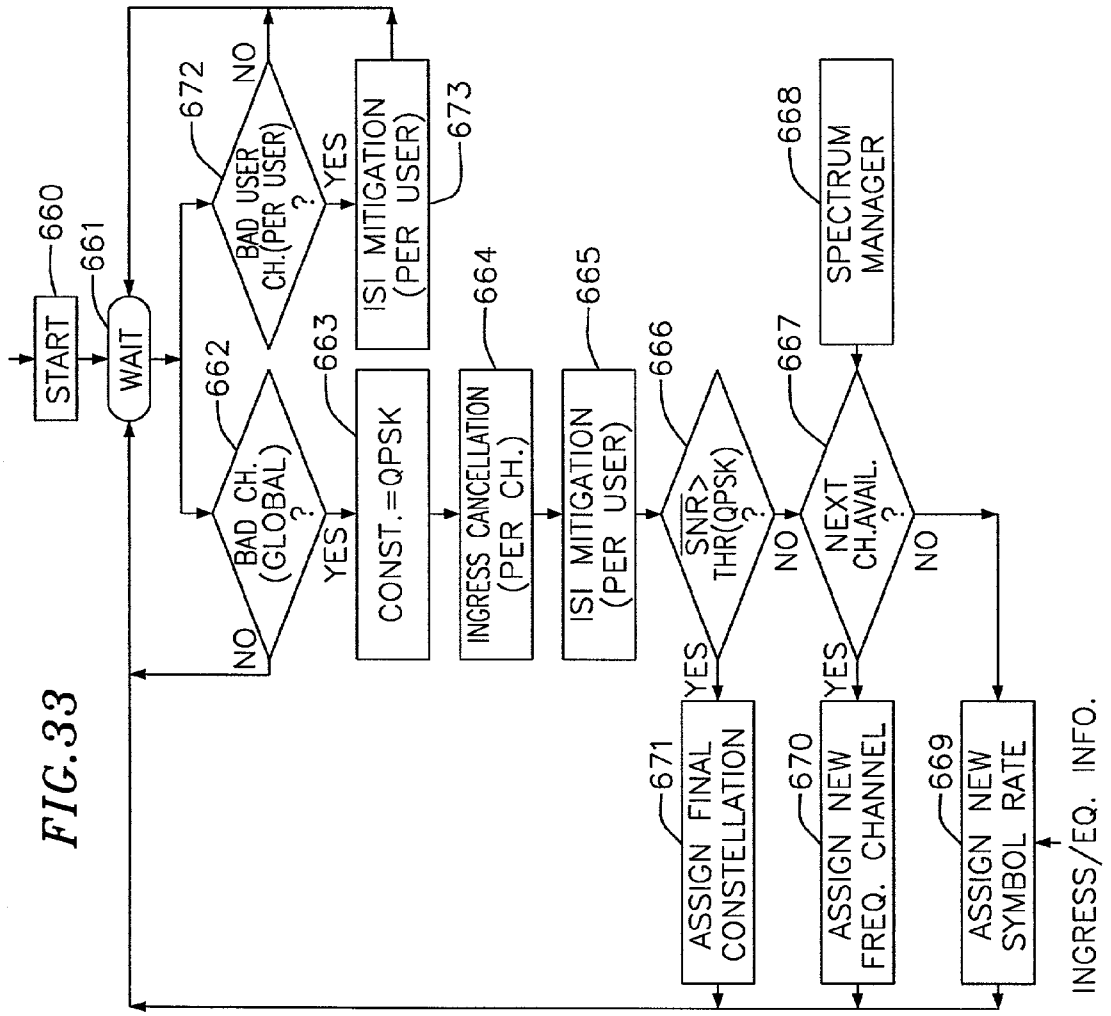
START
660
WAIT
661
BAD CH. (GLOBAL) ?
662
NO
YES
BAD USER CH.(PER USER) ?
672
NO
YES
CONST.=QPSK
663
ISI MITIGATION (PER USER)
673
INGRESS CANCELLATION (PER CH.)
664
ISI MITIGATION (PER USER)
665
SNR> THR(QPSK) ?
666
YES
NO
NEXT CH.AVAIL. ?
667
YES
NO
SPECTRUM MANAGER
668
ASSIGN FINAL CONSTELLATION
671
ASSIGN NEW FREQ. CHANNEL
670
ASSIGN NEW SYMBOL RATE
669
INGRESS/EQ. INFO.

FIG. 33

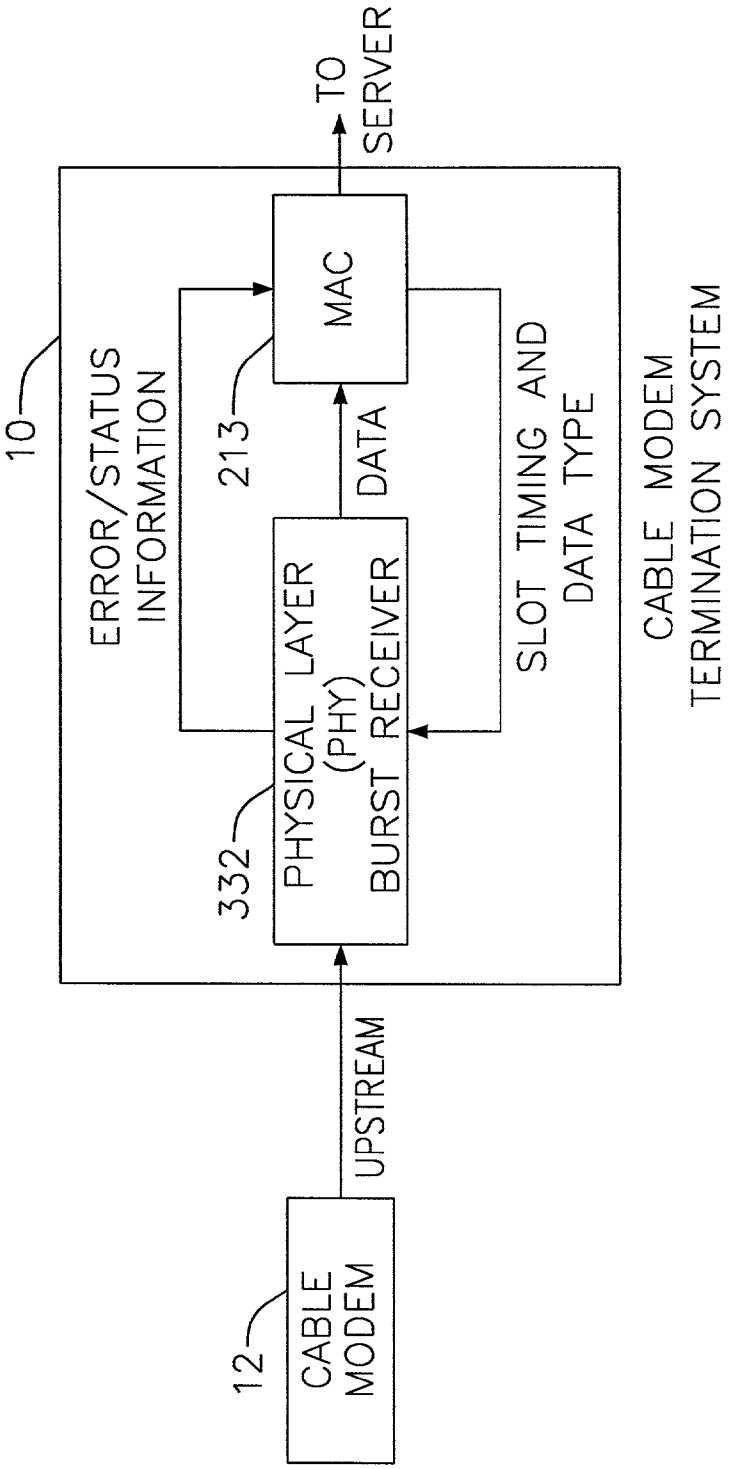
10
12
CABLE MODEM
UPSTREAM
332
PHYSICAL LAYER (PHY) BURST RECEIVER
ERROR/STATUS INFORMATION
213
DATA
MAC
TO SERVER
SLOT TIMING AND DATA TYPE
CABLE MODEM TERMINATION SYSTEM

FIG. 34

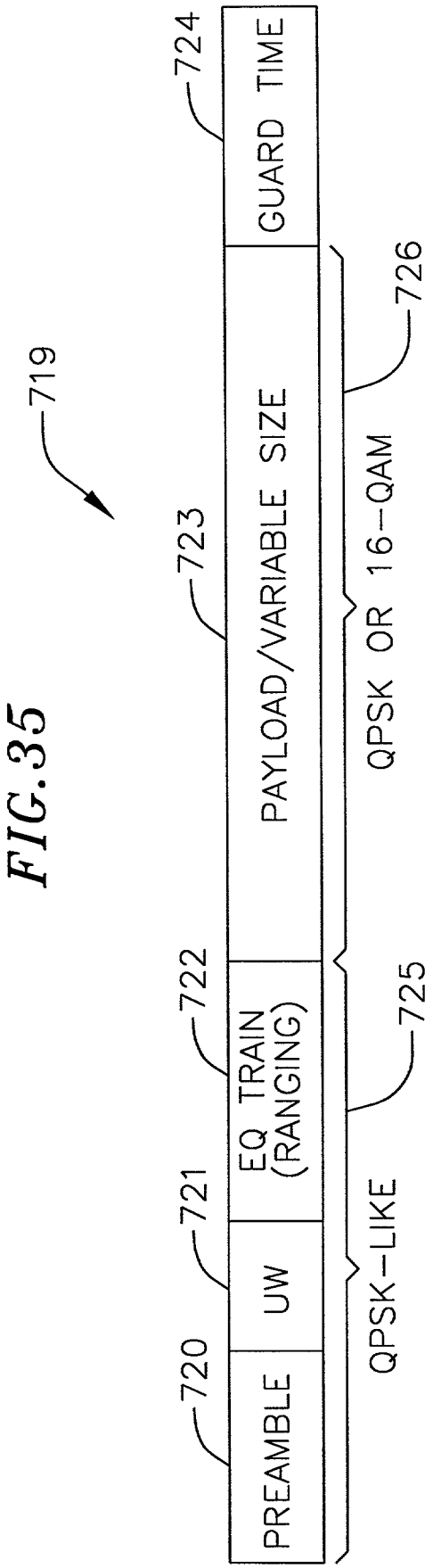
719
720
PREAMBLE
721
UW
722
EQ TRAIN
(RANGING)
723
PAYLOAD/VARIABLE SIZE
724
GUARD TIME
725
QPSK-LIKE
726
QPSK OR 16-QAM

FIG. 35

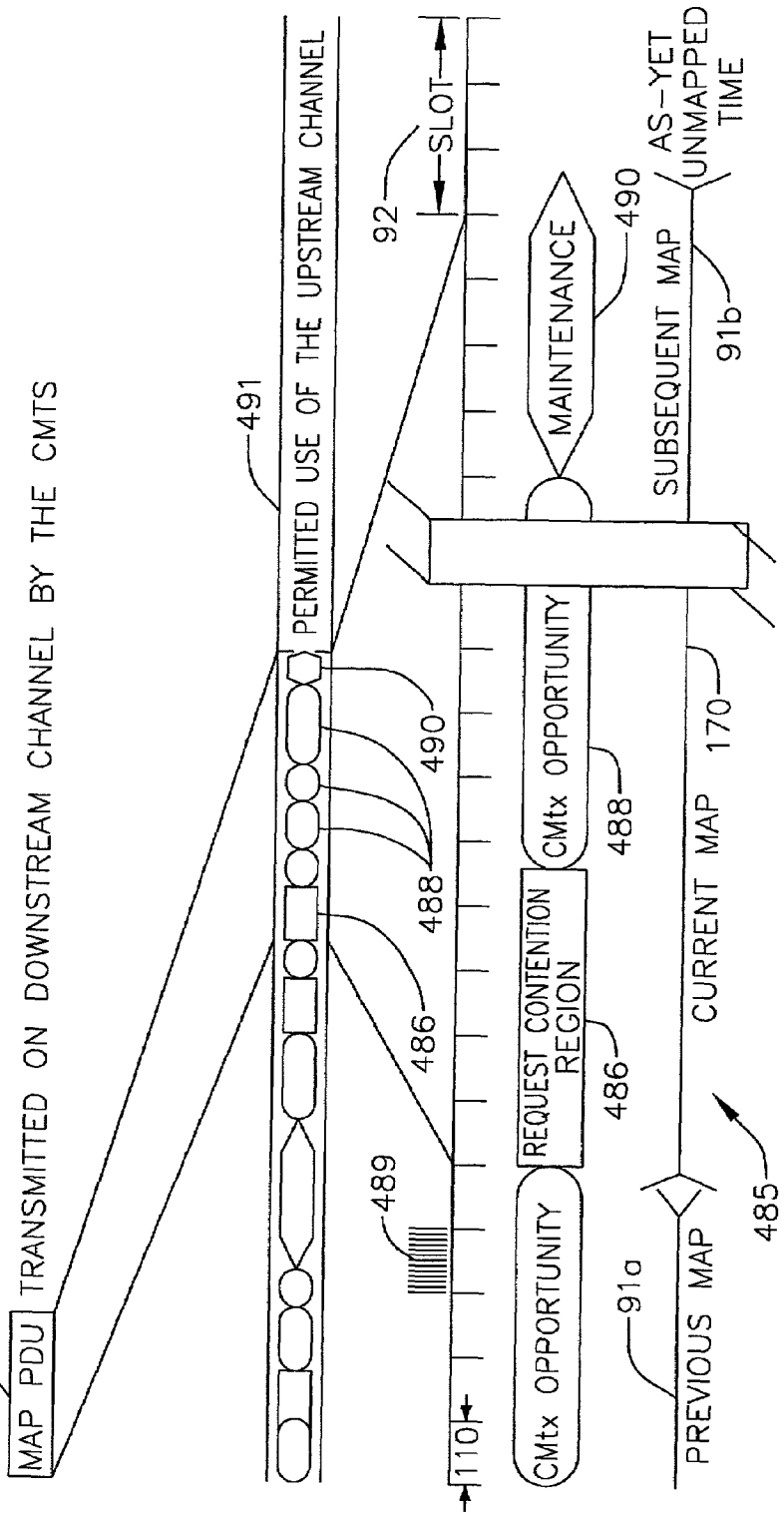
MAP PDU
487
TRANSMITTED ON DOWNSTREAM CHANNEL BY THE CMTS
PERMITTED USE OF THE UPSTREAM CHANNEL
491
490
488
486
489
110
92
SLOT
CMtx OPPORTUNITY
REQUEST CONTENTION REGION
CMtx OPPORTUNITY
MAINTENANCE
490
SUBSEQUENT MAP
91b
AS-YET UNMAPPED TIME
488
486
CURRENT MAP
170
485
PREVIOUS MAP
91a

FIG. 36

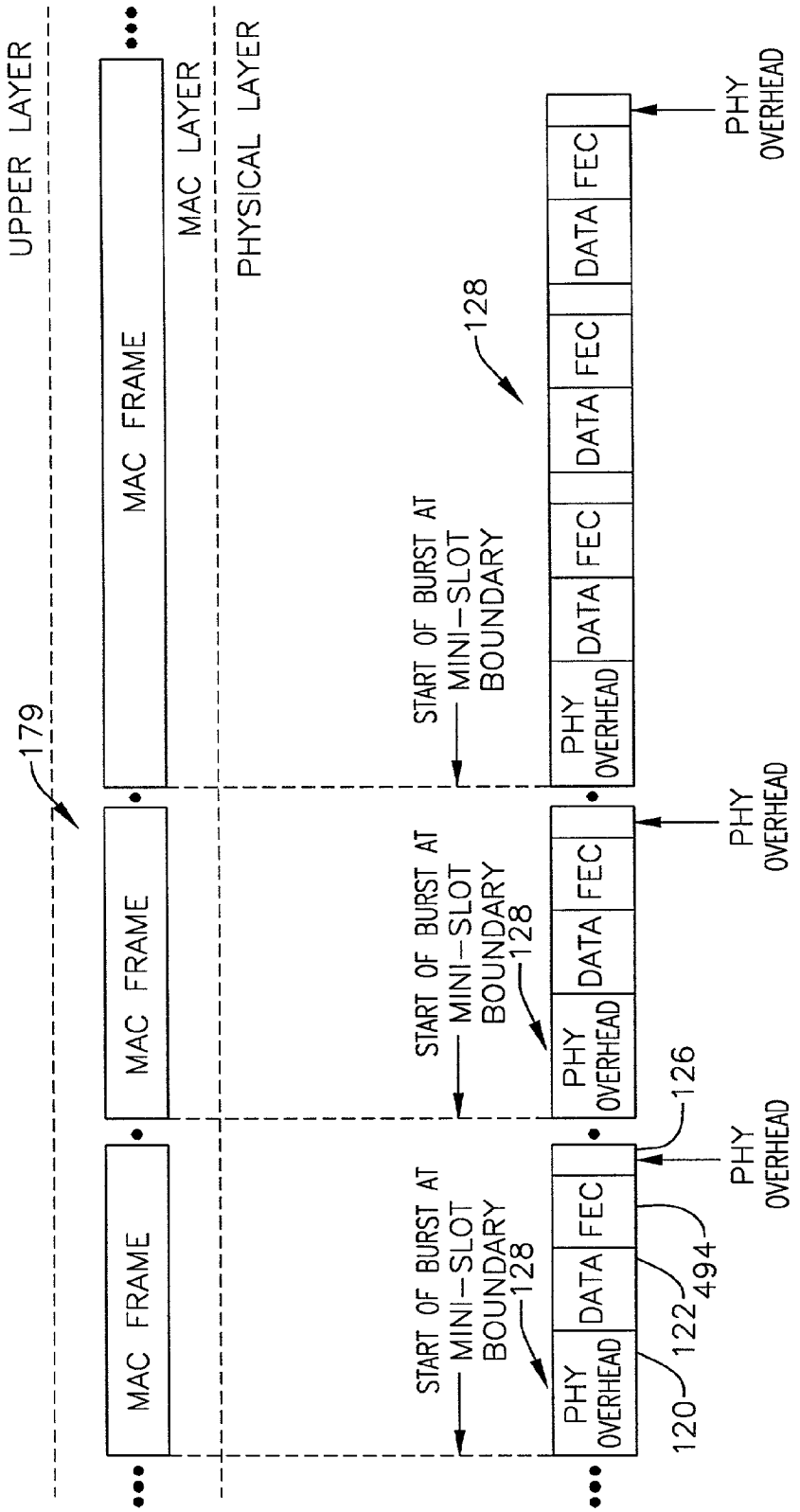
UPPER LAYER
MAC LAYER
PHYSICAL LAYER
179
MAC FRAME
MAC FRAME
MAC FRAME
START OF BURST AT MINI-SLOT BOUNDARY
128
PHY OVERHEAD
DATA
FEC
120
122
494
126
PHY OVERHEAD

FIG. 37

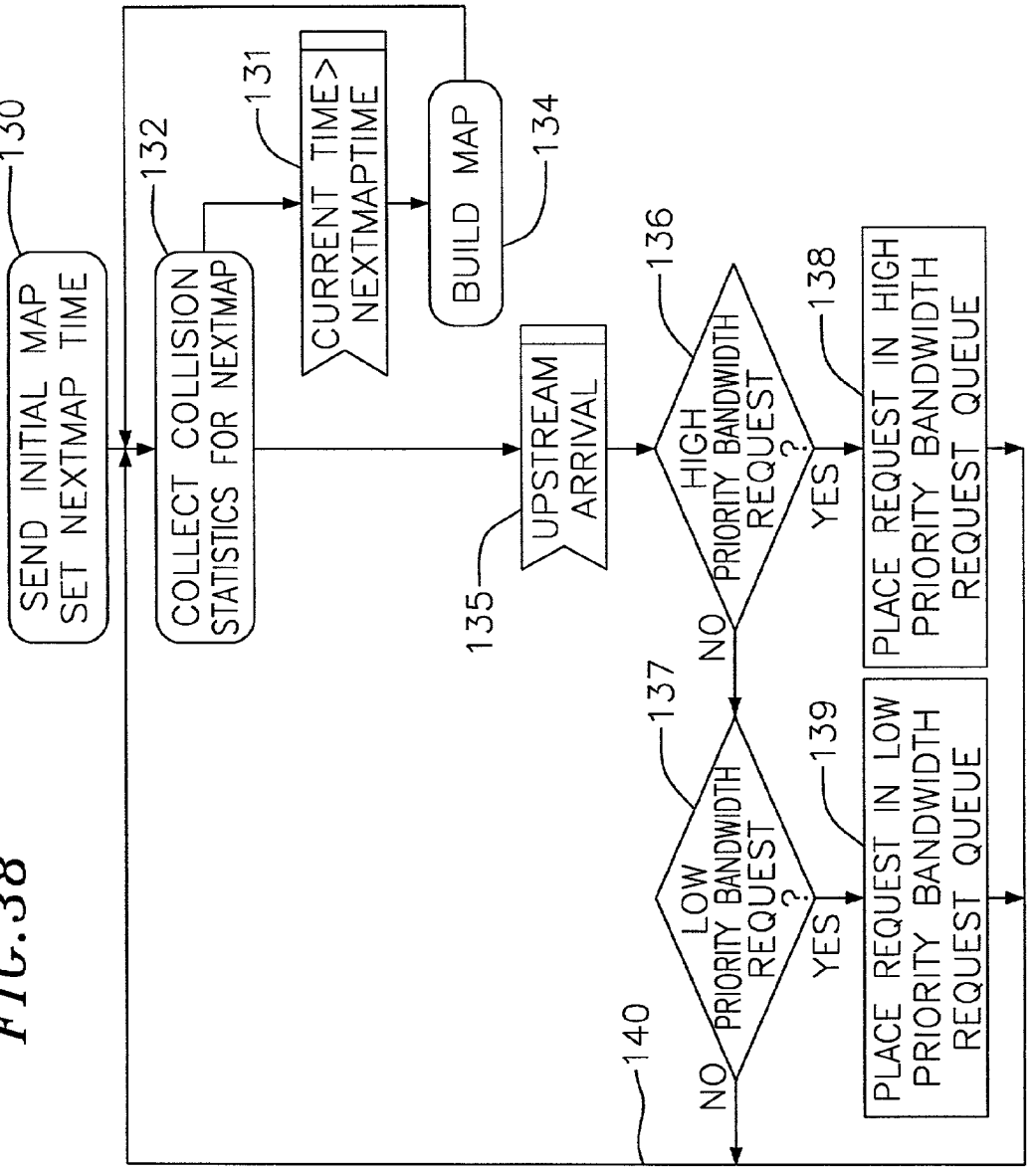
130
SEND INITIAL MAP
SET NEXTMAP TIME
132
COLLECT COLLISION
STATISTICS FOR NEXTMAP
131
CURRENT TIME>
NEXTMAPTIME
134
BUILD MAP
135
UPSTREAM
ARRIVAL
136
HIGH
PRIORITY BANDWIDTH
REQUEST
?
YES
NO
138
PLACE REQUEST IN HIGH
PRIORITY BANDWIDTH
REQUEST QUEUE
137
LOW
PRIORITY BANDWIDTH
REQUEST
?
YES
NO
139
PLACE REQUEST IN LOW
PRIORITY BANDWIDTH
REQUEST QUEUE
140

FIG. 38

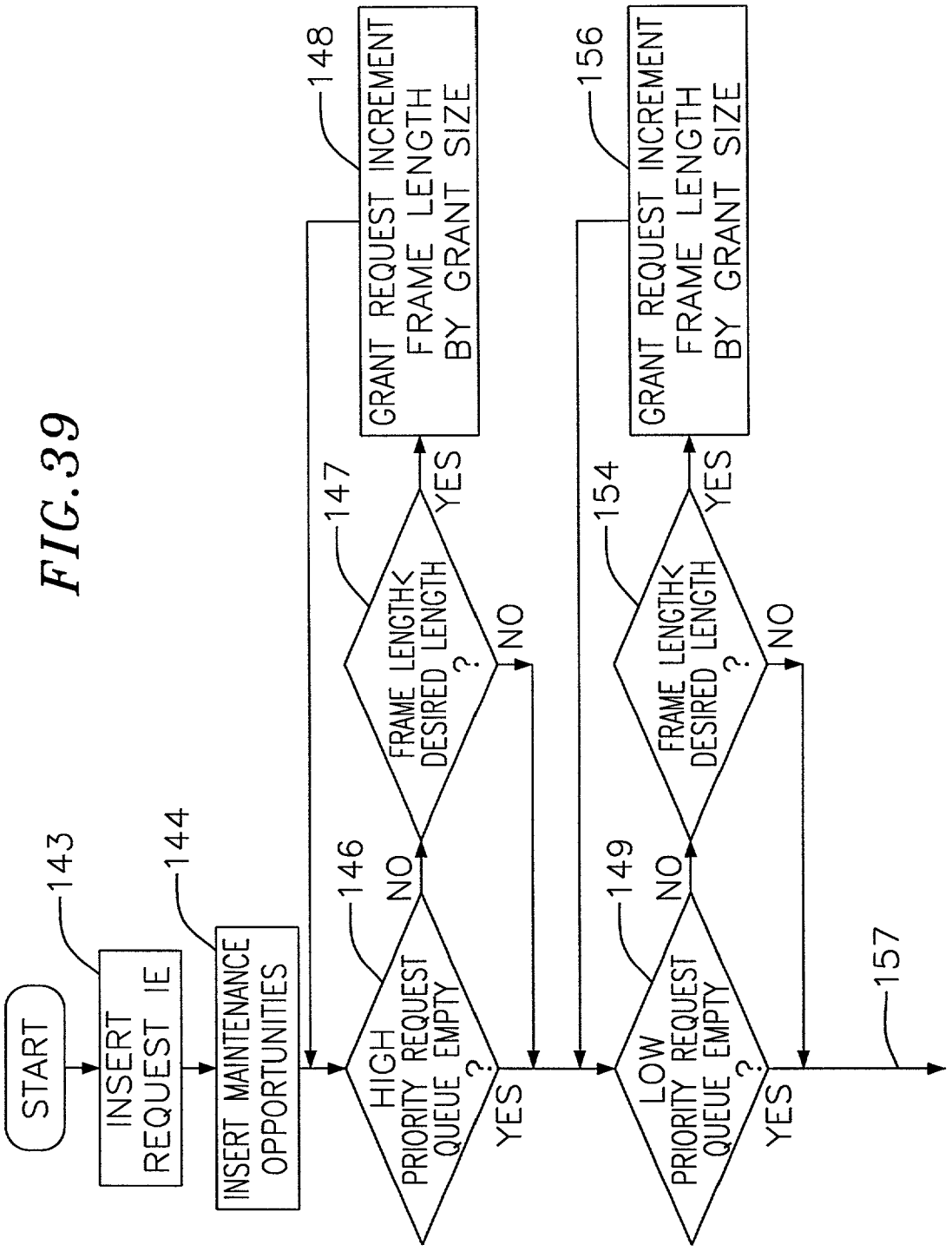
START
INSERT REQUEST IE
143
INSERT MAINTENANCE OPPORTUNITIES
144
HIGH PRIORITY REQUEST QUEUE EMPTY ?
146
NO
YES
FRAME LENGTH< DESIRED LENGTH ?
147
YES
NO
GRANT REQUEST INCREMENT FRAME LENGTH BY GRANT SIZE
148
LOW PRIORITY REQUEST QUEUE EMPTY ?
149
NO
YES
FRAME LENGTH< DESIRED LENGTH ?
154
YES
NO
GRANT REQUEST INCREMENT FRAME LENGTH BY GRANT SIZE
156
157

FIG. 39

FIG. 40

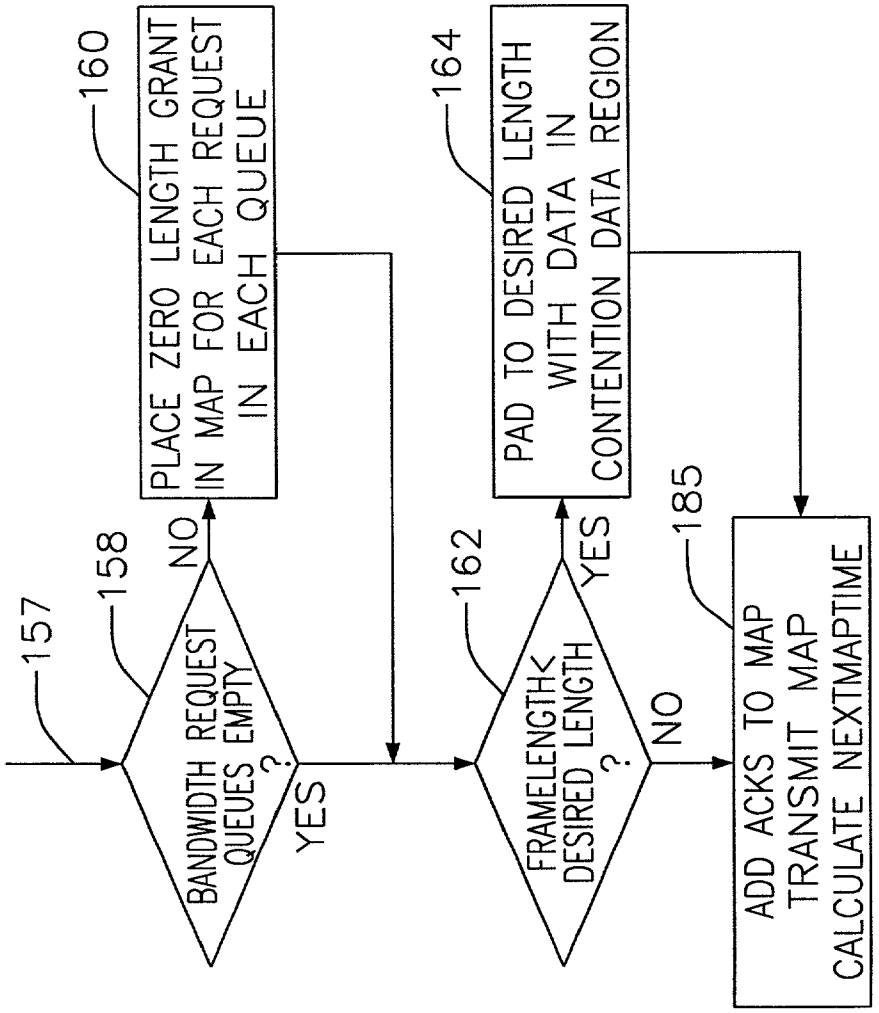
157
158
BANDWIDTH REQUEST QUEUES EMPTY ?
NO
YES
160
PLACE ZERO LENGTH GRANT IN MAP FOR EACH REQUEST IN EACH QUEUE
162
FRAMELENGTH< DESIRED LENGTH ?
YES
NO
164
PAD TO DESIRED LENGTH WITH DATA IN CONTENTION DATA REGION
185
ADD ACKS TO MAP
TRANSMIT MAP
CALCULATE NEXTMAPTIME

FIG. 41

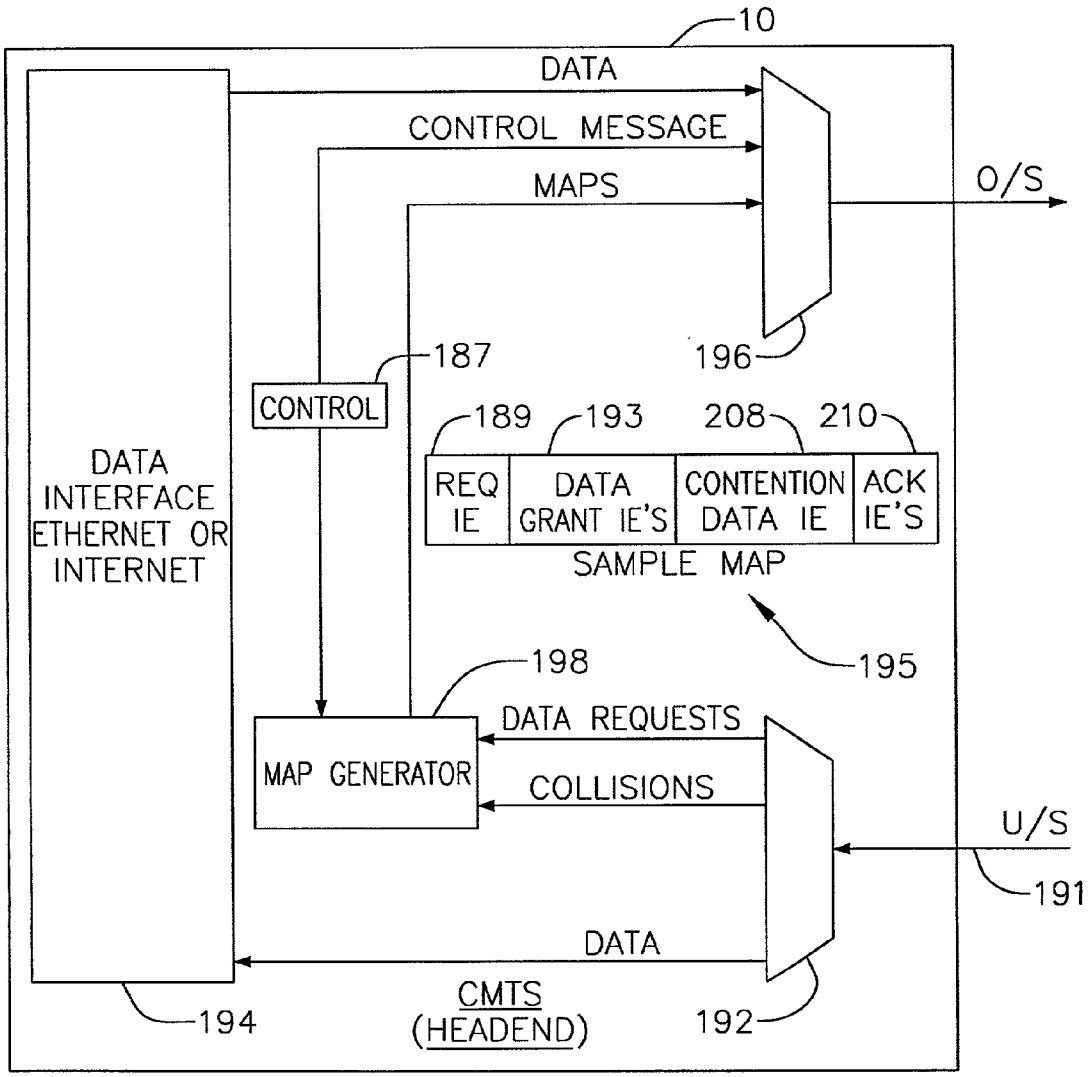
10
DATA
CONTROL MESSAGE
MAPS
O/S
196
187
CONTROL
189
193
208
210
REQ IE
DATA GRANT IE'S
CONTENTION DATA IE
ACK IE'S
SAMPLE MAP
195
DATA INTERFACE ETHERNET OR INTERNET
198
DATA REQUESTS
MAP GENERATOR
COLLISIONS
U/S
191
DATA
CMTS (HEADEND)
194
192

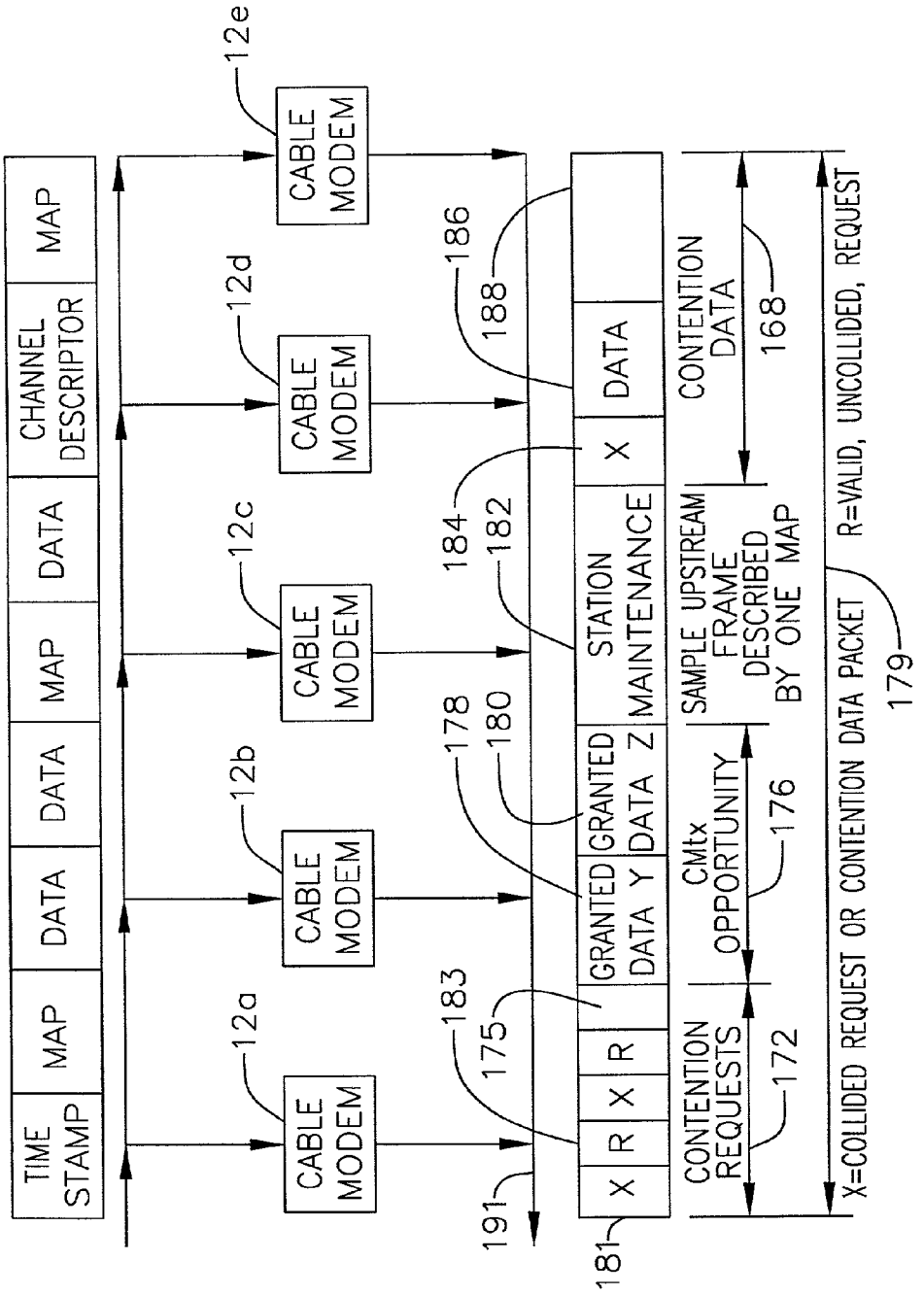
TIME STAMP
MAP
DATA
DATA
MAP
DATA
CHANNEL DESCRIPTOR
MAP
CABLE MODEM
12a
12b
12c
12d
12e
183
175
178
180
184
182
186
188
191
181
X
R
X
R
GRANTED DATA Y
GRANTED DATA Z
STATION MAINTENANCE
X
DATA
CONTENTION REQUESTS
CMtx OPPORTUNITY
SAMPLE UPSTREAM FRAME DESCRIBED BY ONE MAP
CONTENTION DATA
172
176
168
179
X=COLLIDED REQUEST OR CONTENTION DATA PACKET
R=VALID, UNCOLLIDED, REQUEST

FIG. 42

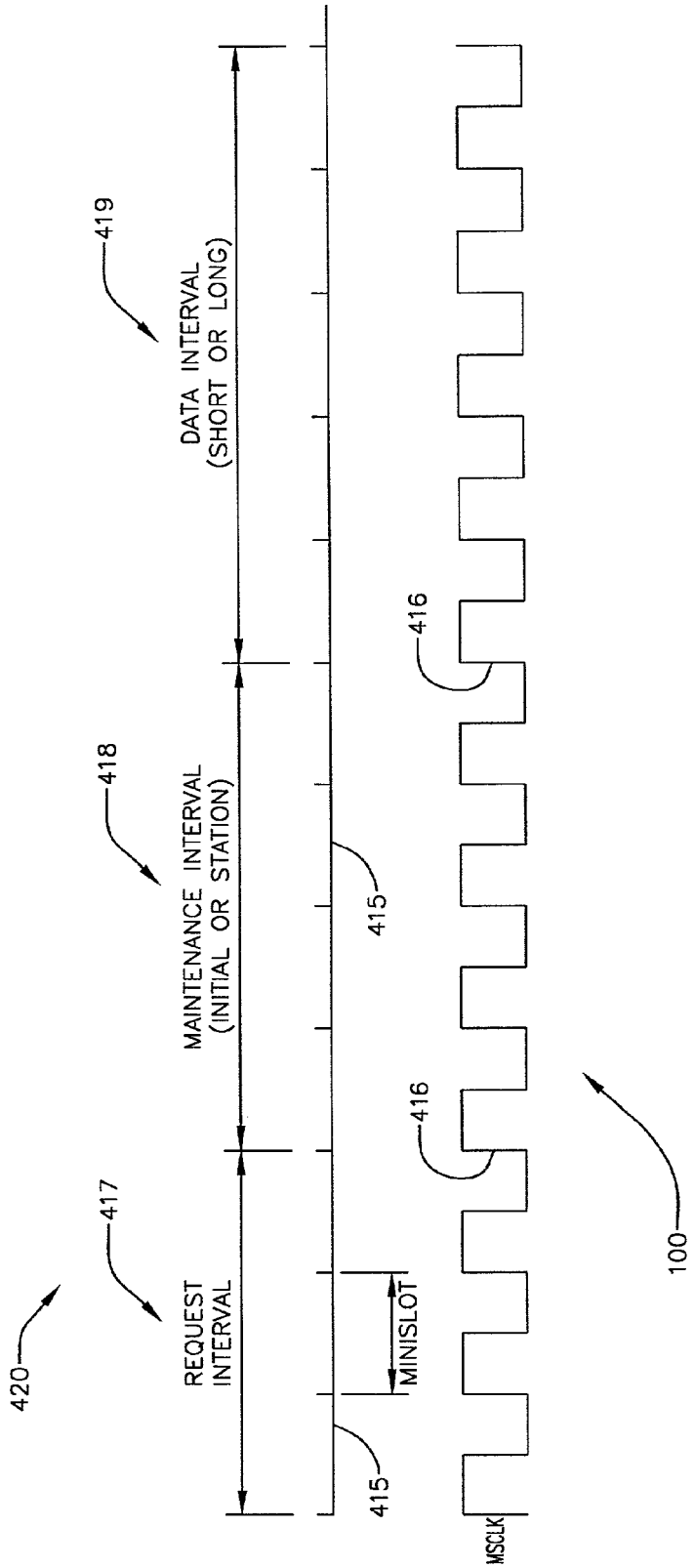
420
417
REQUEST INTERVAL
418
MAINTENANCE INTERVAL (INITIAL OR STATION)
419
DATA INTERVAL (SHORT OR LONG)
415
MINISLOT
415
416
416
MSCLK
100

FIG. 43

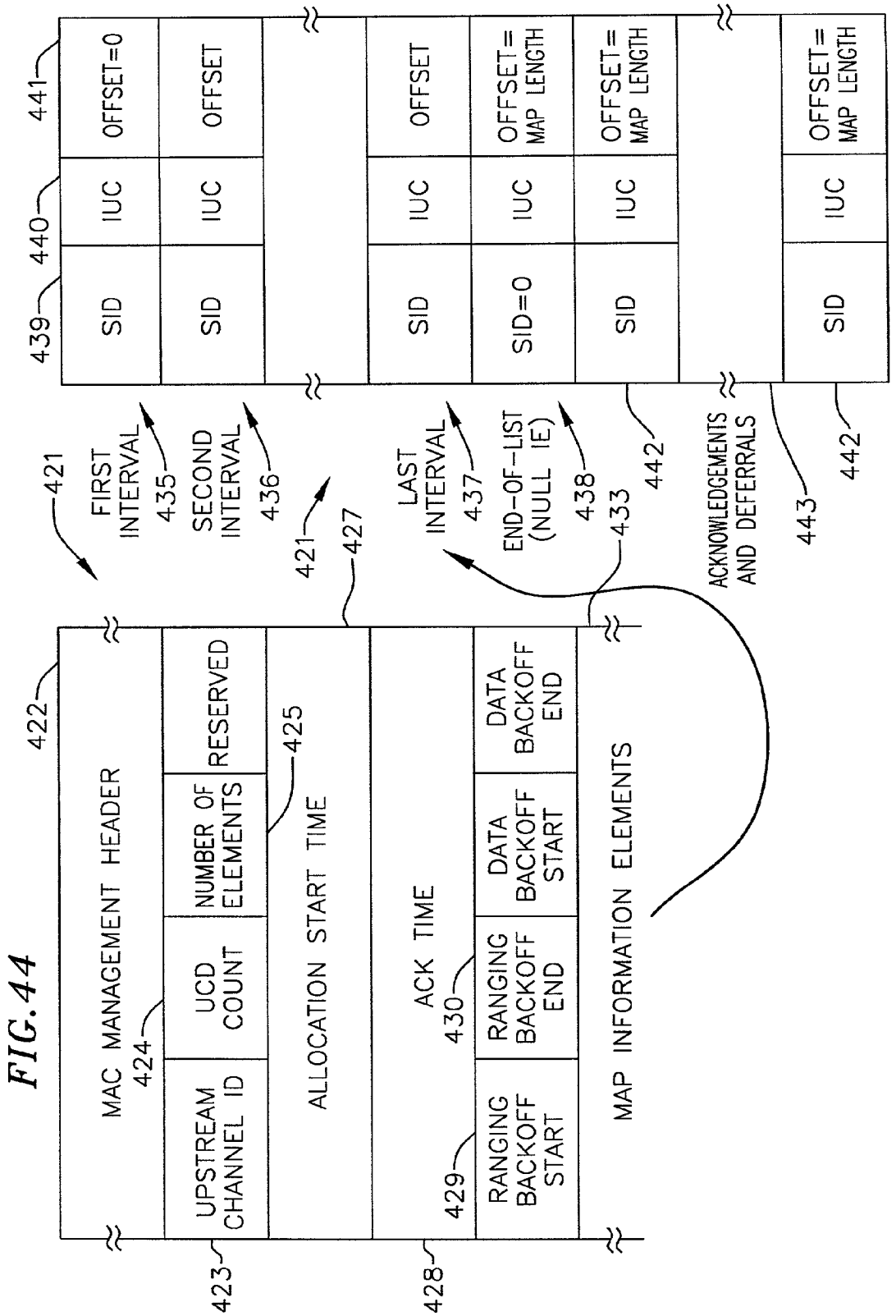
FIG. 44
MAC MANAGEMENT HEADER
UPSTREAM CHANNEL ID
UCD COUNT
NUMBER OF ELEMENTS
RESERVED
ALLOCATION START TIME
ACK TIME
RANGING BACKOFF START
RANGING BACKOFF END
DATA BACKOFF START
DATA BACKOFF END
MAP INFORMATION ELEMENTS
SID
IUC
OFFSET=0
OFFSET
SID=0
OFFSET= MAP LENGTH
FIRST INTERVAL
SECOND INTERVAL
LAST INTERVAL
END-OF-LIST (NULL IE)
ACKNOWLEDGEMENTS AND DEFERRALS
421
422
423
424
425
427
428
429
430
433
435
436
437
438
439
440
441
442
443

FIG. 45

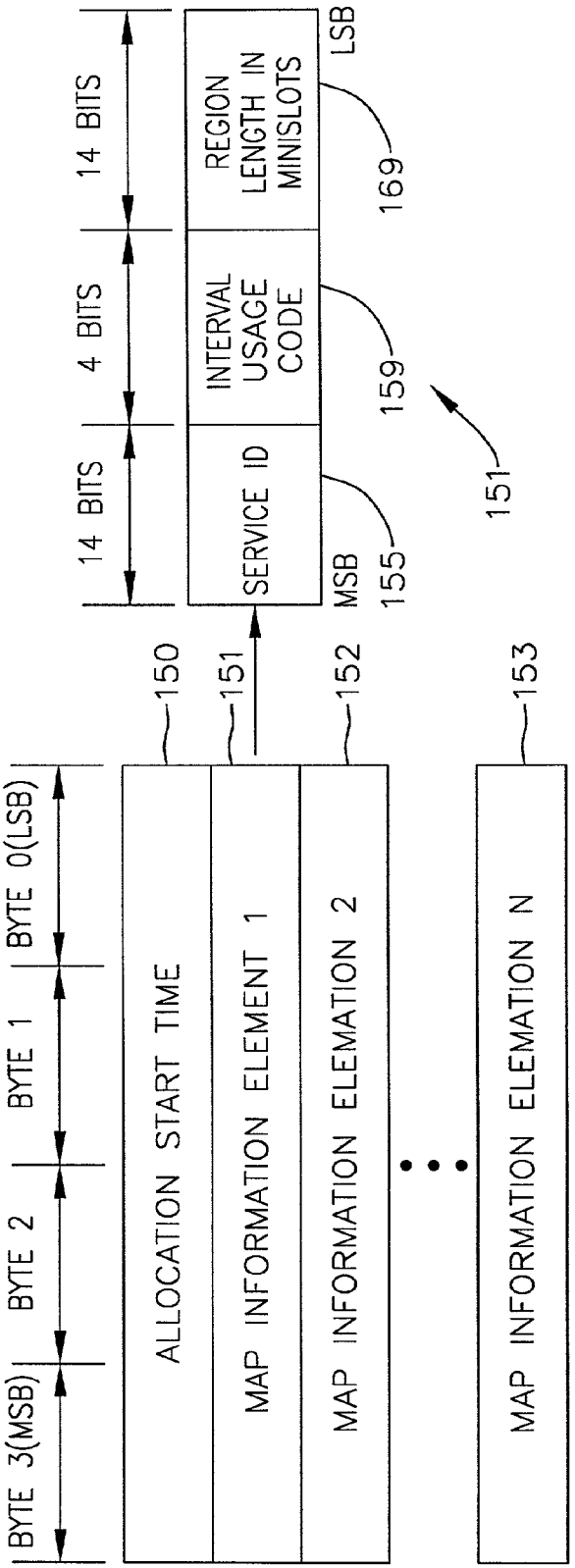
BYTE 3(MSB)
BYTE 2
BYTE 1
BYTE 0(LSB)
ALLOCATION START TIME
MAP INFORMATION ELEMENT 1
MAP INFORMATION ELEMATION 2
MAP INFORMATION ELEMATION N
150
151
152
153
14 BITS
4 BITS
14 BITS
SERVICE ID
INTERVAL USAGE CODE
REGION LENGTH IN MINISLOTS
MSB
LSB
155
159
169
151

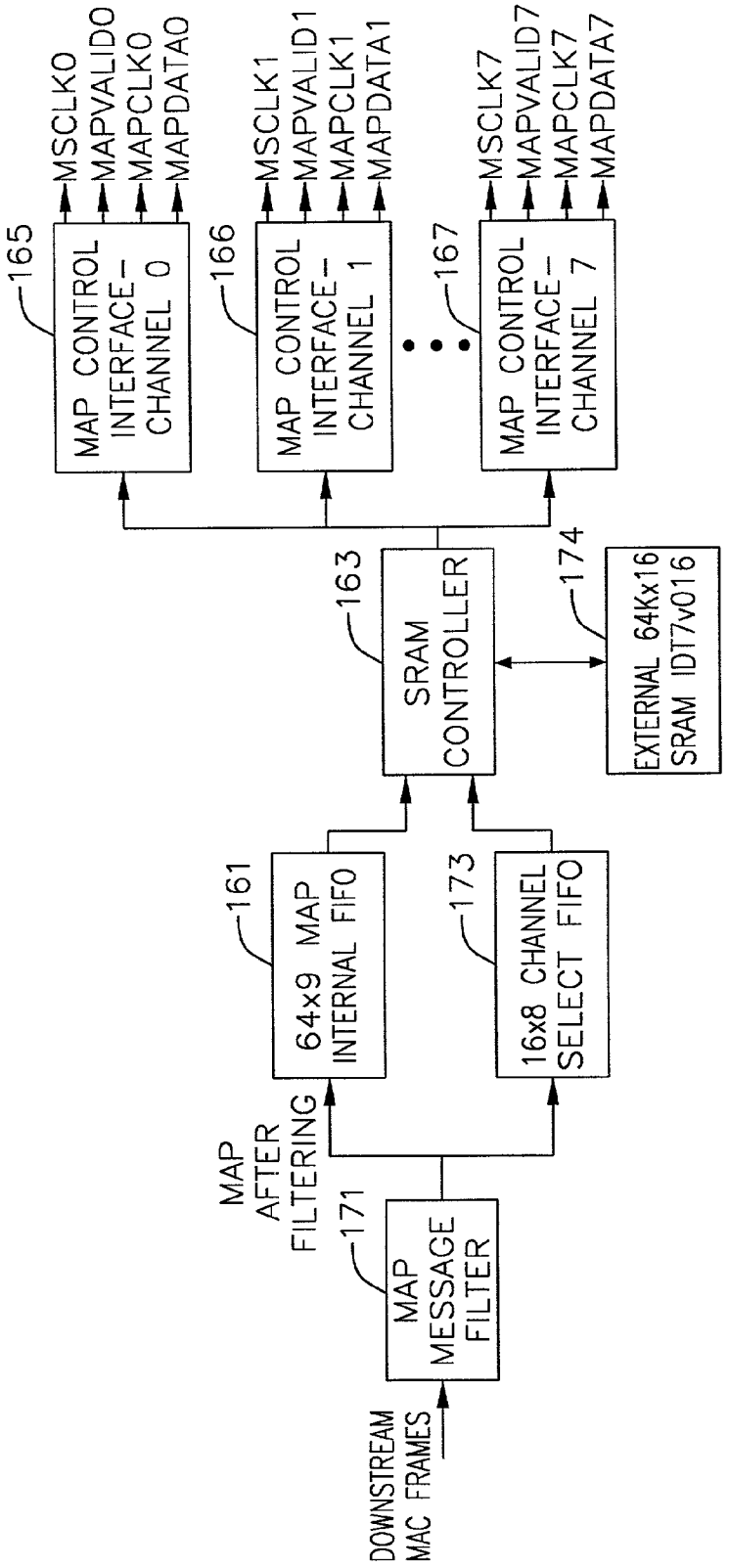
DOWNSTREAM MAC FRAMES
MAP MESSAGE FILTER
171
MAP AFTER FILTERING
64x9 MAP INTERNAL FIFO
161
16x8 CHANNEL SELECT FIFO
173
SRAM CONTROLLER
163
EXTERNAL 64Kx16 SRAM IDT7v016
174
MAP CONTROL INTERFACE-CHANNEL 0
165
MSCLK0
MAPVALID0
MAPCLK0
MAPDATA0
MAP CONTROL INTERFACE-CHANNEL 1
166
MSCLK1
MAPVALID1
MAPCLK1
MAPDATA1
MAP CONTROL INTERFACE-CHANNEL 7
167
MSCLK7
MAPVALID7
MAPCLK7
MAPDATA7

FIG. 46

FIG. 47

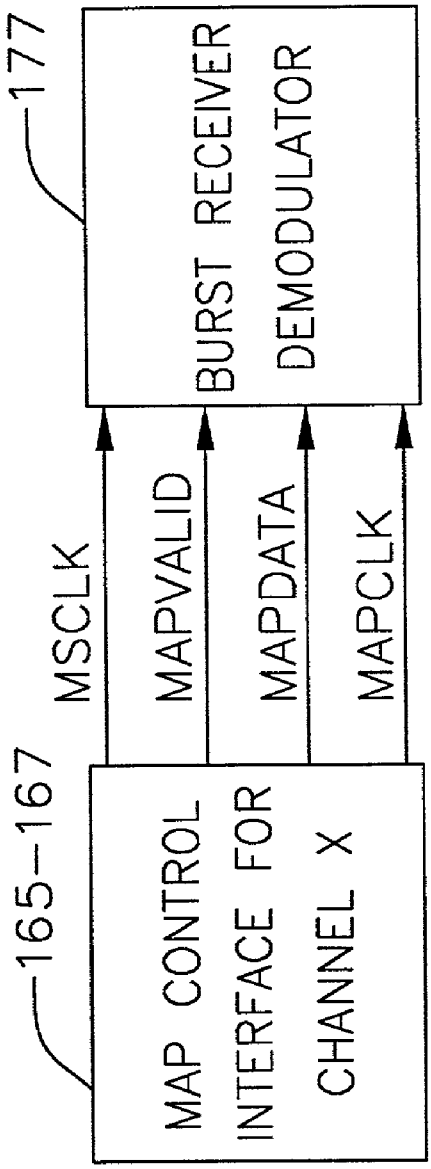
165–167
MAP CONTROL INTERFACE FOR CHANNEL X
MSCLK
MAPVALID
MAPDATA
MAPCLK
177
BURST RECEIVER DEMODULATOR

FIG. 48

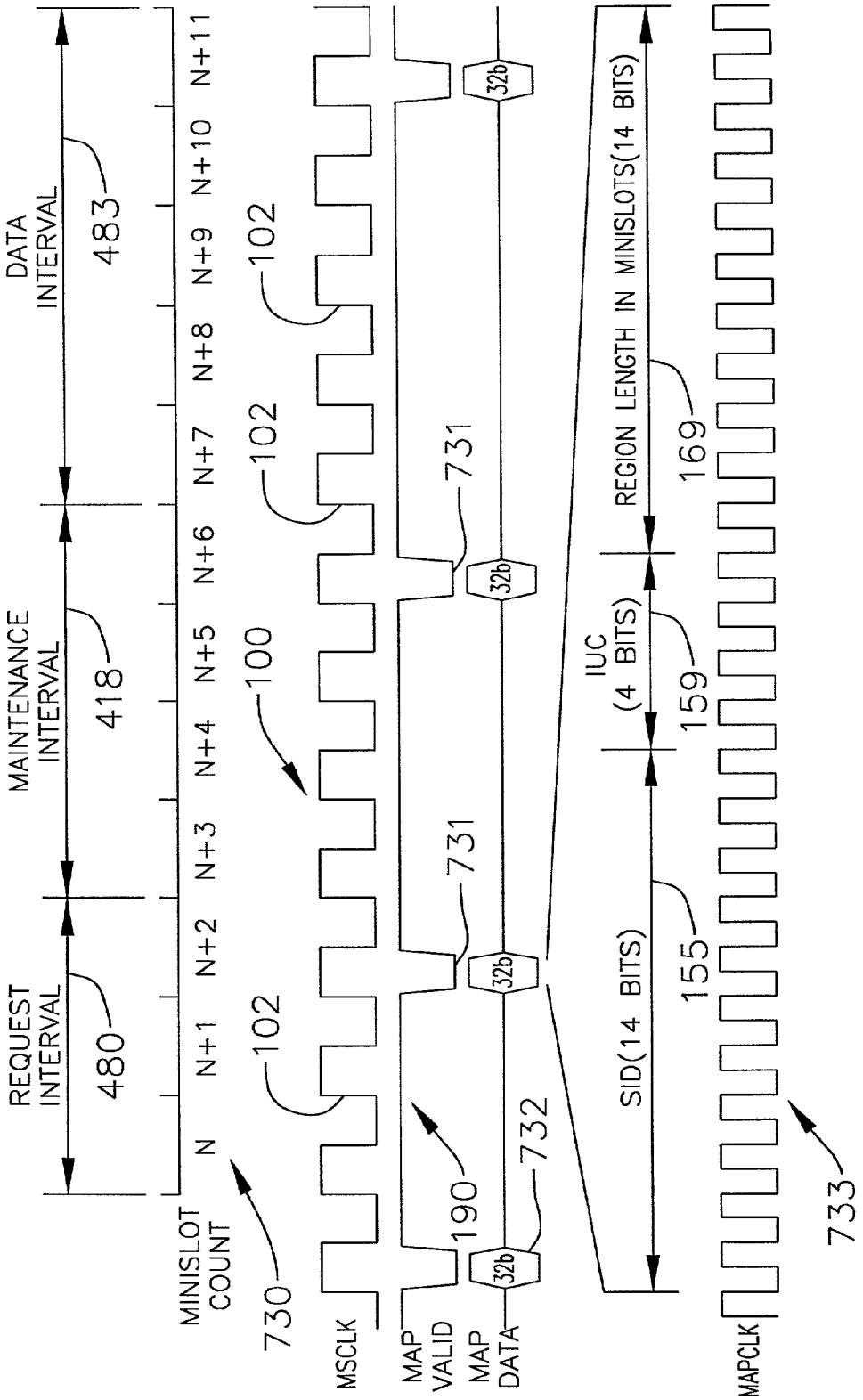
REQUEST INTERVAL
480
MAINTENANCE INTERVAL
418
DATA INTERVAL
483
MINISLOT COUNT
N
N+1
N+2
N+3
N+4
N+5
N+6
N+7
N+8
N+9
N+10
N+11
730
MSCLK
102
100
MAP VALID
190
MAP DATA
32b
731
732
SID(14 BITS)
155
IUC (4 BITS)
159
REGION LENGTH IN MINISLOTS(14 BITS)
169
MAPCLK
733

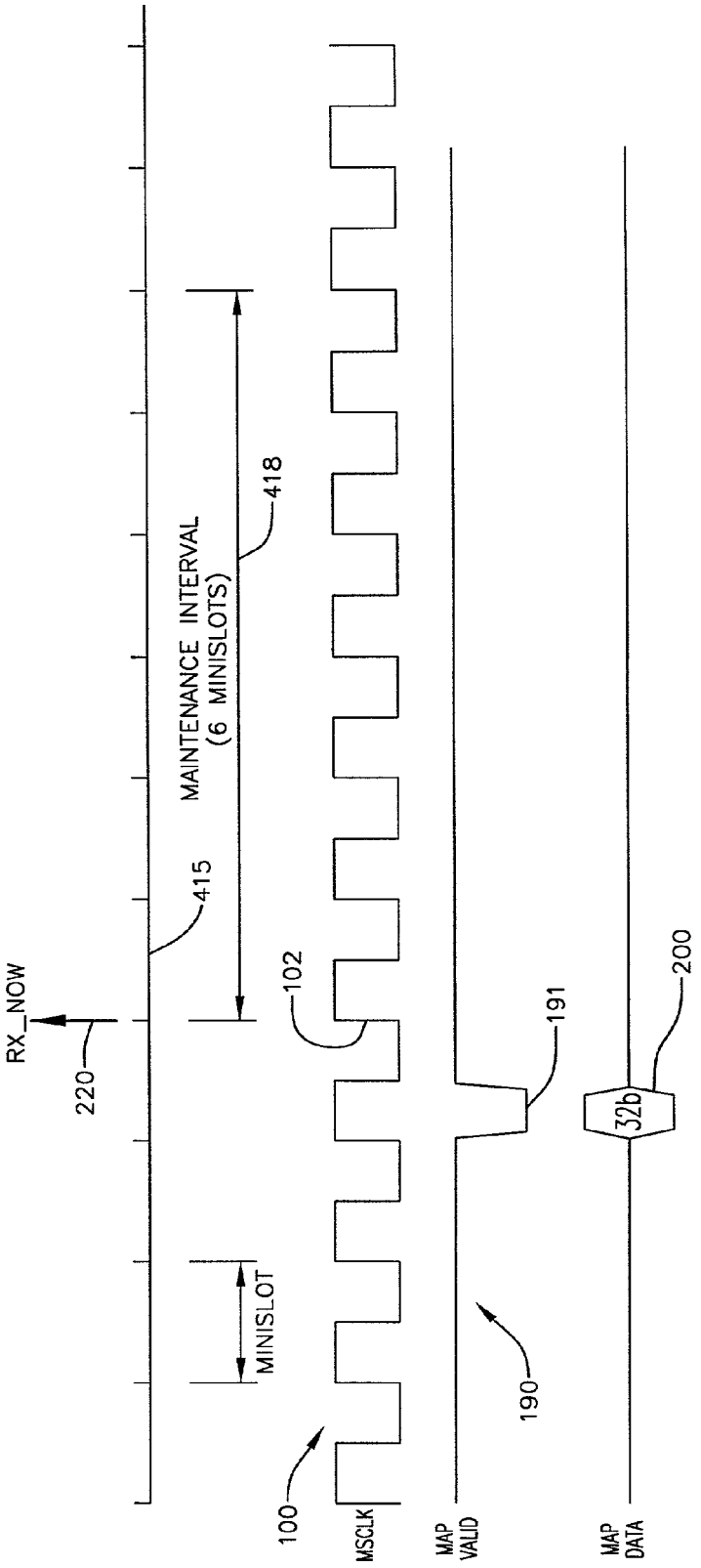
RX_NOW
220
415
MAINTENANCE INTERVAL
(6 MINISLOTS)
418
MINISLOT
100
102
MSCLK
190
191
MAP
VALID
32b
200
MAP
DATA

FIG. 49

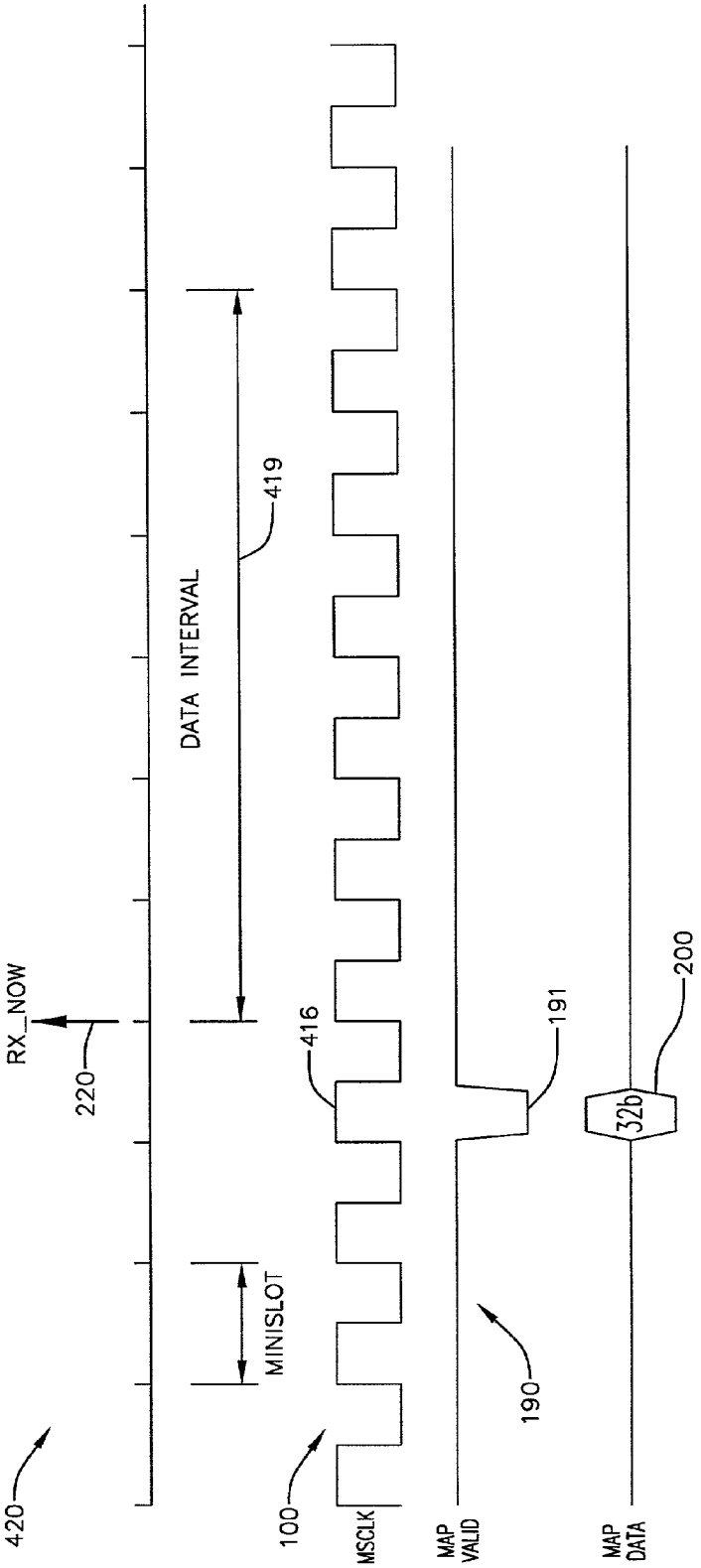
420
RX_NOW
220
DATA INTERVAL
419
MINISLOT
100
416
MSCLK
MAP VALID
190
191
MAP DATA
32b
200

FIG.50

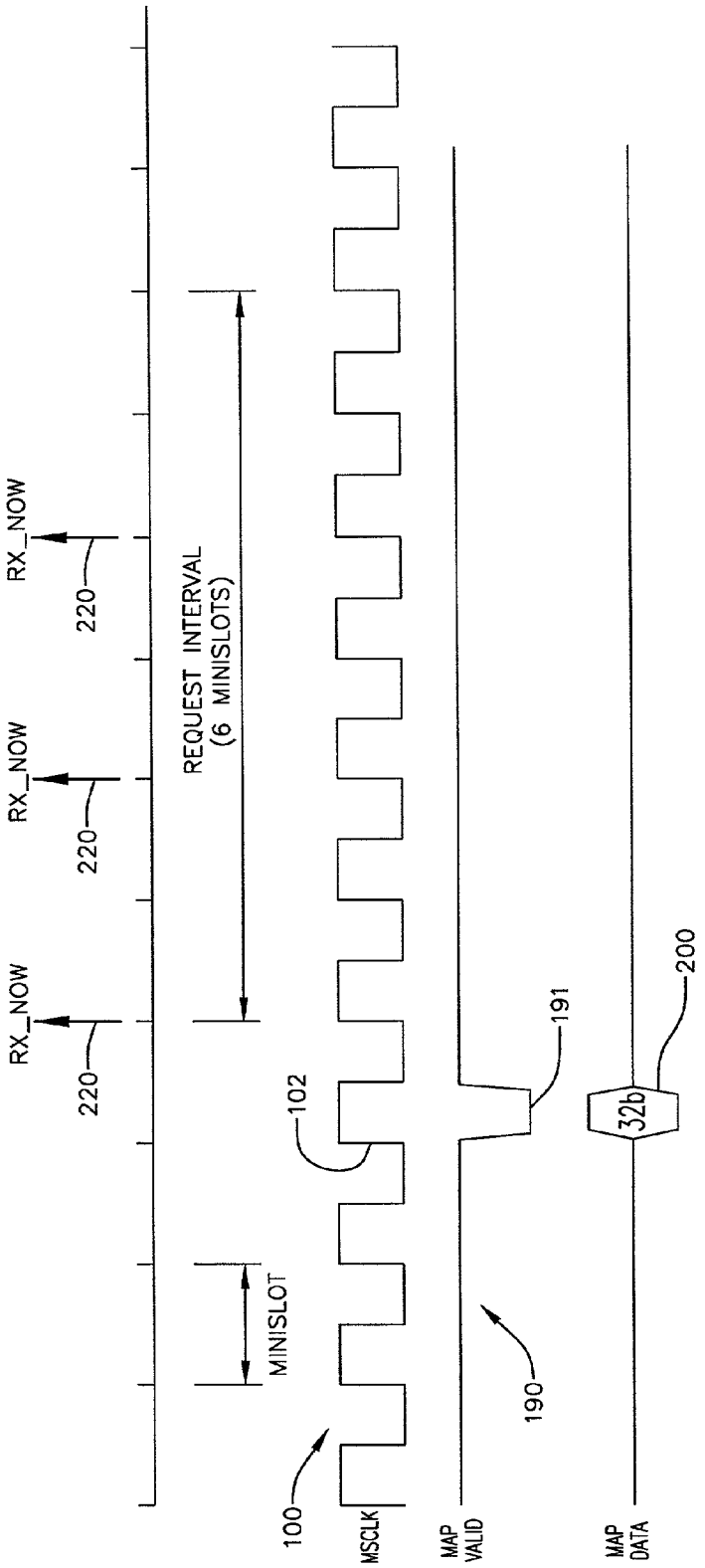
RX_NOW
220
RX_NOW
220
RX_NOW
220
REQUEST INTERVAL
(6 MINISLOTS)
MINISLOT
102
100
MSCLK
191
190
MAP
VALID
32b
200
MAP
DATA

FIG.51

FIG.52

RNG. OFFSET 7 BYTES

STATUS 2 BYTES	TIMESTAMP 4 BYTES	CH. ID 1 BYTE	SID 2 BYTES	PWR. 2 BYTES	FREQ. 2 BYTES	TIME 3 BYTES

FIG.53

RNG. OFFSET 7 BYTES

STATUS 2 BYTES	TIMESTAMP 4 BYTES	CH. ID 1 BYTE	SID 2 BYTES	PWR. 2 BYTES	FREQ. 2 BYTES	TIME 3 BYTES	EQUALIZER COEFFS. 32 BYTES

FIG.54

BASED ON THE STATUS BYTES[7:5] BITS, THE FOLLOWING STATISTICS ARE KEPT USING COUNTERS.

SLOT DEFINITION	STATISTICS	CALCULATION
DATA	1.NUMBER OF SLOTS 2.NUMBER OF SLOTS WITH POWER BUT NO DATA 3.NUMBER OF SLOTS WITH BAD DATA 4.NUMBER OF GOOD DATA-SLOTS 5.TOTAL NUMBER OF FEC BLOCKS 6.NUMBER OF FEC BLOCKS WITH CORRECTABLE ERRORS. 7.NUMBER OF UNCORRECTABLE FEC BLOCKS	NO UW UW AND (BAD FEC OR BAD HEC) UW AND GOOD HEC
REQUEST(CONTENTION)	1.NUMBER OF REQUESTS RECEIVED 2.NUMBER OF COLLIDED REQUESTS 3.NUMBER OF CORRUPTED REQUESTS	NO UW NO UW OR BAD FEC OR BAD HEC
REQUEST/DATA (CONTENTION)	1.NUMBER OF PACKETS RECEIVED 2.NUMBER OF COLLIDED PACKETS 3.NUMBER OF CORRUPTED PACKETS	NO UW NO UW OR BAD FEC OR BAD HEC
RANGING	1.NUMBER OF RANGING MESSAGES RECEIVED 2.NUMBER OF COLLIDED RANGING MESSAGES RECEIVED 3.NUMBER OF CORRUPTED RANGING MESSAGES	NO UW NO UW OR BAD FEC OR BAD HEC

FIG.55

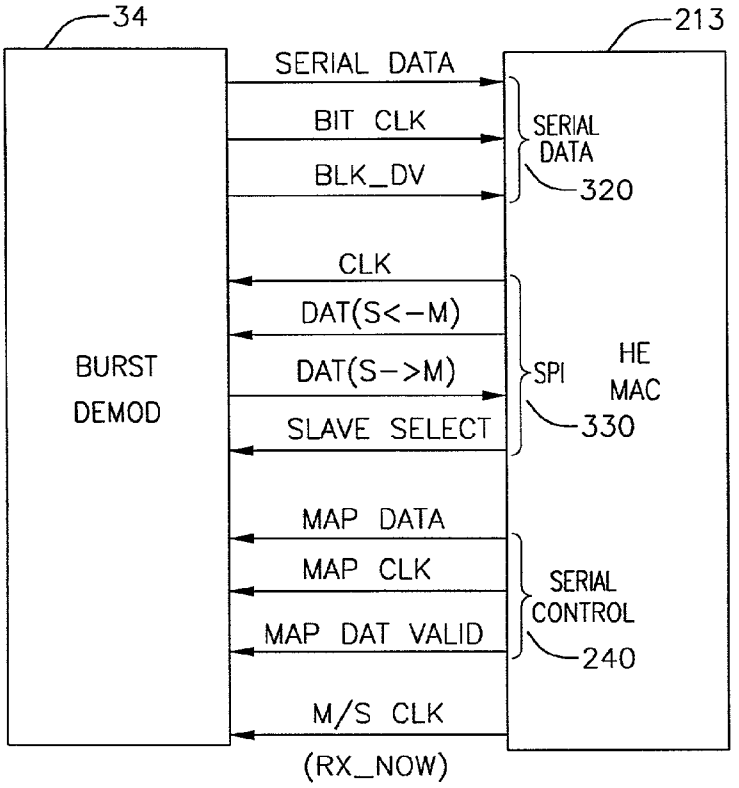
34
213
SERIAL DATA
BIT CLK
BLK_DV
SERIAL DATA
320
CLK
DAT(S<-M)
DAT(S->M)
SLAVE SELECT
SPI
330
HE MAC
BURST DEMOD
MAP DATA
MAP CLK
MAP DAT VALID
SERIAL CONTROL
240
M/S CLK
(RX_NOW)

FIG.56

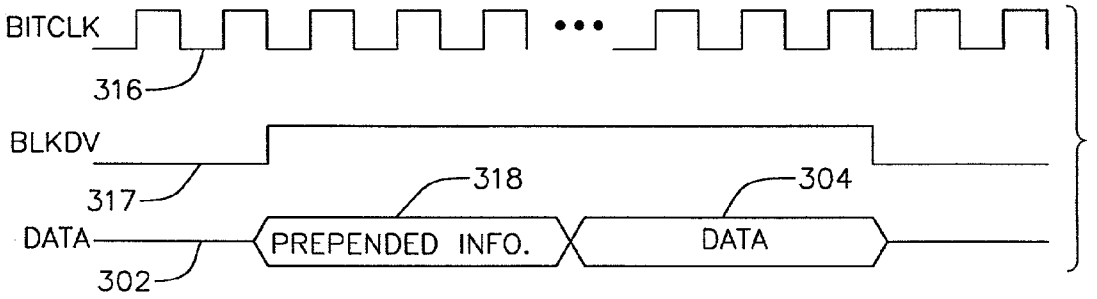
BITCLK
316
BLKDV
317
318
304
DATA
PREPENDED INFO.
DATA
302

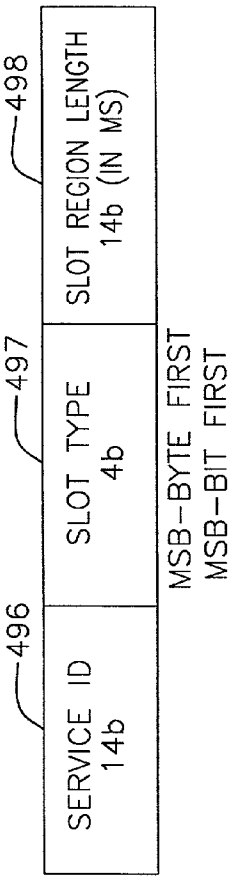

FIG.57

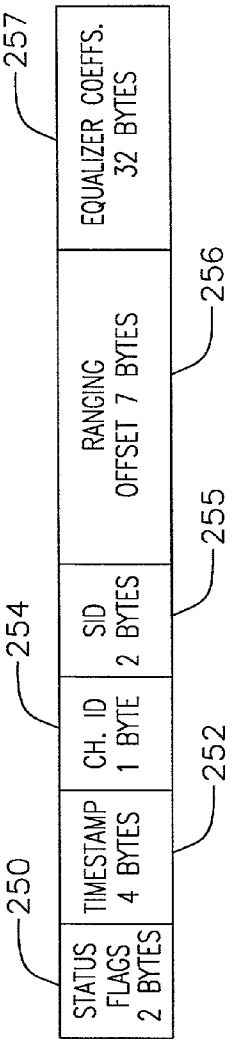

FIG.58

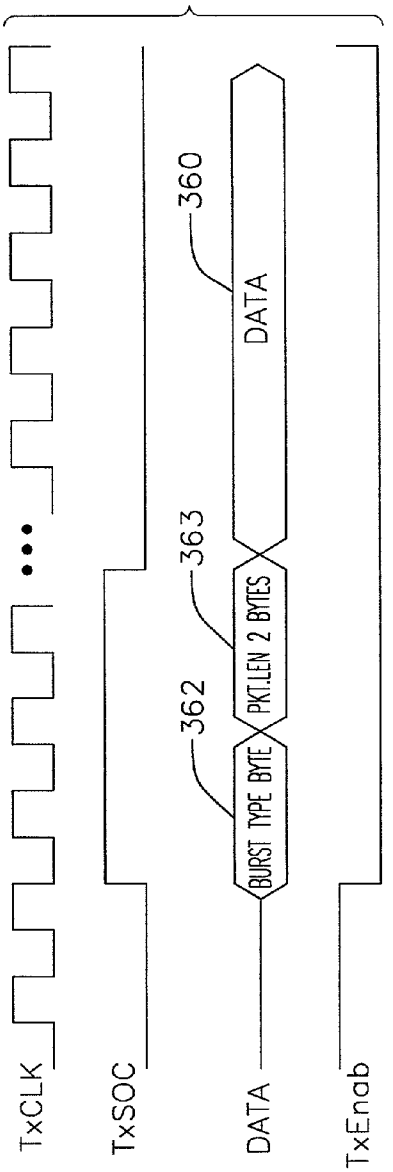

FIG.59

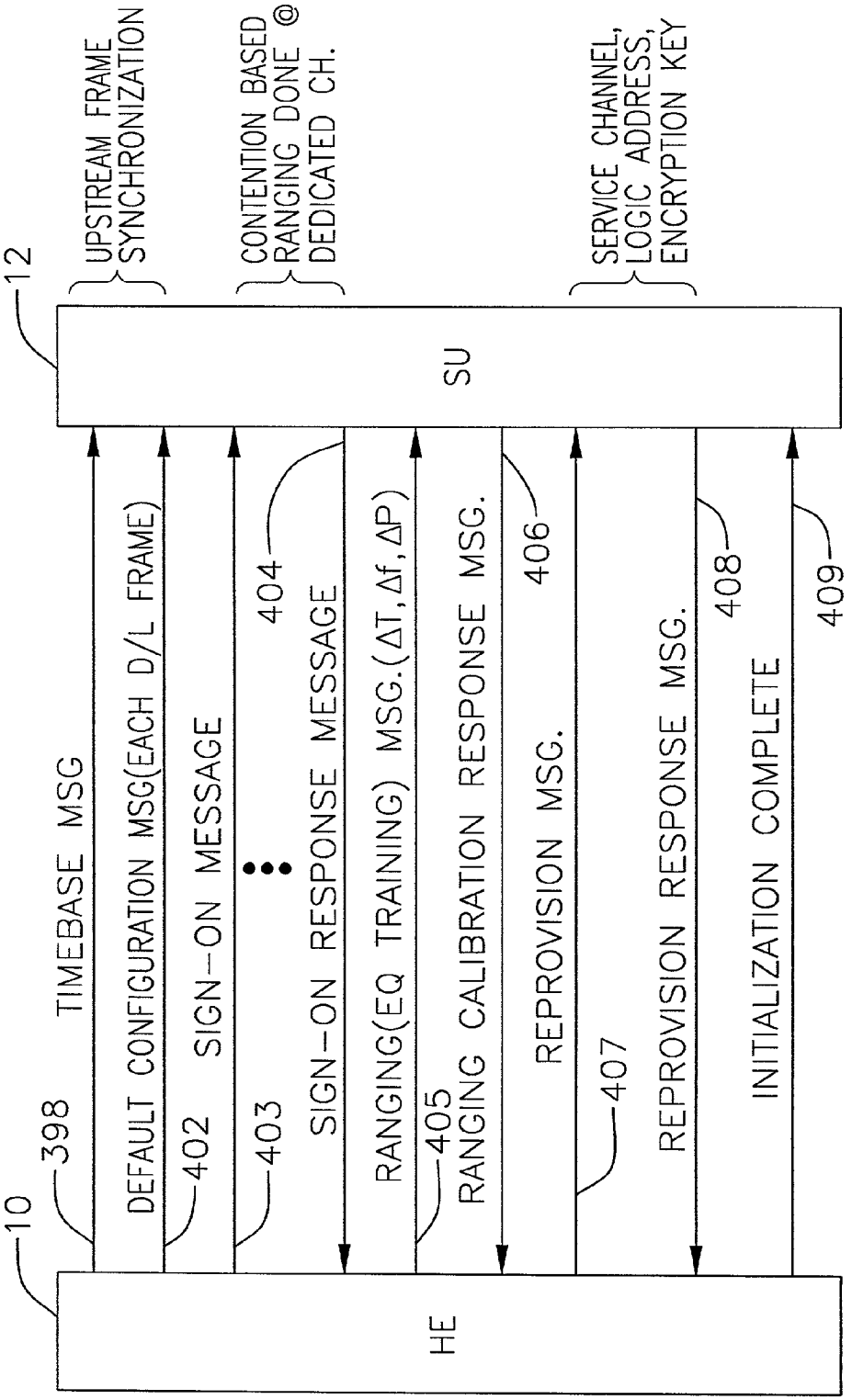
10
HE
12
SU
398
TIMEBASE MSG
402
DEFAULT CONFIGURATION MSG(EACH D/L FRAME)
403
SIGN-ON MESSAGE
404
SIGN-ON RESPONSE MESSAGE
405
RANGING(EQ TRAINING) MSG.(ΔT,Δf,ΔP)
406
RANGING CALIBRATION RESPONSE MSG.
407
REPROVISION MSG.
408
REPROVISION RESPONSE MSG.
409
INITIALIZATION COMPLETE
UPSTREAM FRAME SYNCHRONIZATION
CONTENTION BASED RANGING DONE @ DEDICATED CH.
SERVICE CHANNEL, LOGIC ADDRESS, ENCRYPTION KEY

FIG. 60

FIG. 61

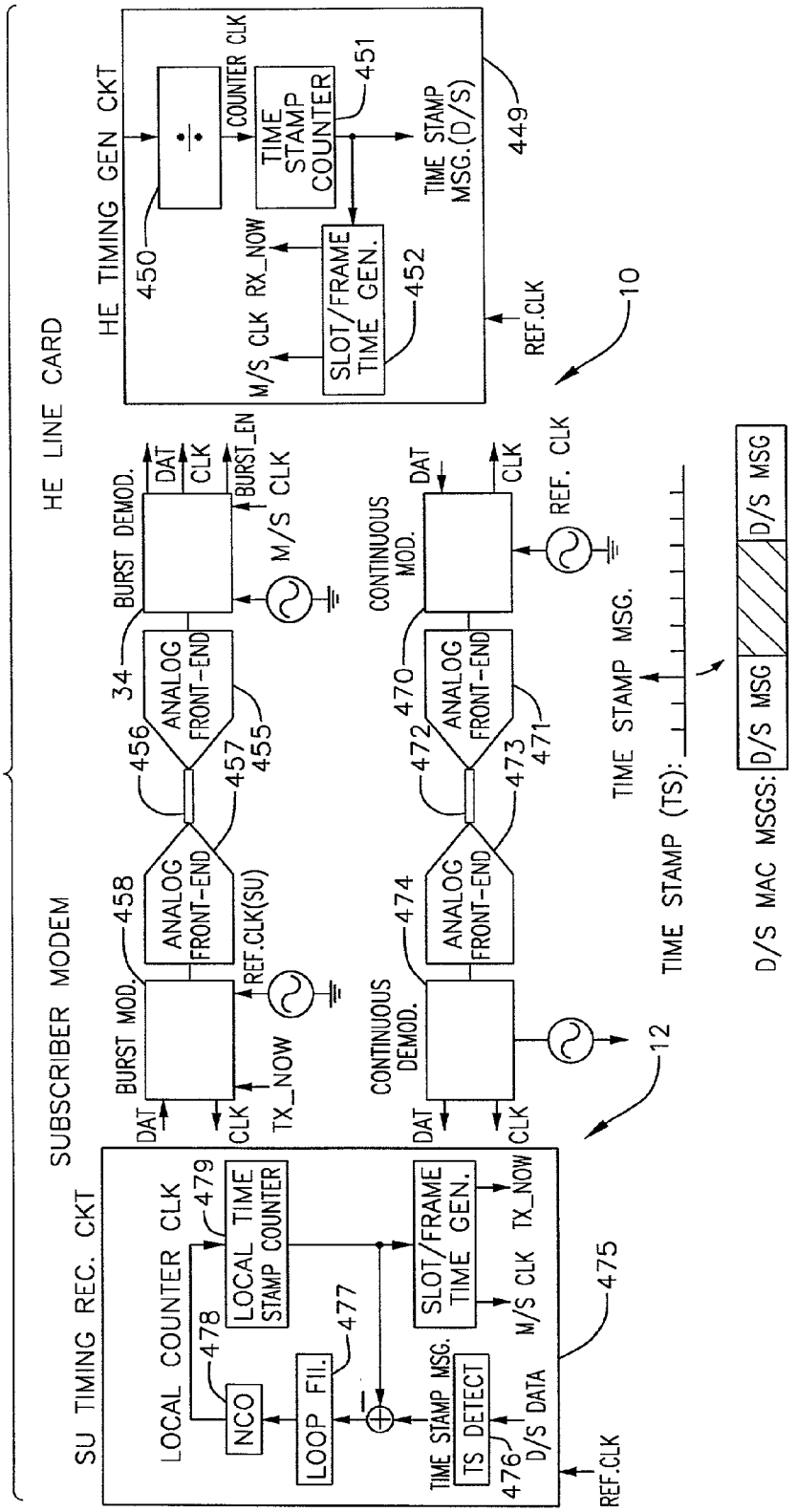
HE LINE CARD
HE TIMING GEN CKT
450
COUNTER CLK
TIME STAMP COUNTER
451
TIME STAMP MSG.(D/S)
449
M/S CLK
RX_NOW
SLOT/FRAME TIME GEN.
452
REF.CLK
10
SUBSCRIBER MODEM
BURST DEMOD.
DAT
CLK
BURST_EN
M/S CLK
34
ANALOG FRONT-END
456
457
455
BURST MOD.
458
REF.CLK(SU)
TX_NOW
CONTINUOUS MOD.
REF. CLK
470
472
473
471
CONTINUOUS DEMOD.
474
12
TIME STAMP MSG.
TIME STAMP (TS):
D/S MAC MSGS:
D/S MSG
SU TIMING REC. CKT
LOCAL COUNTER CLK
479
LOCAL TIME STAMP COUNTER
478
NCO
LOOP FIL.
477
SLOT/FRAME TIME GEN.
475
TIME STAMP MSG.
TS DETECT
476
D/S DATA

FIG. 62

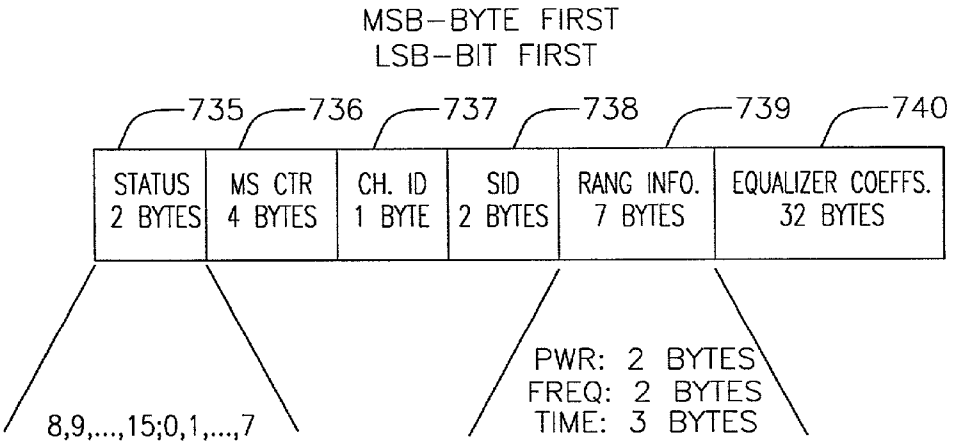
MSB–BYTE FIRST
LSB–BIT FIRST
735
736
737
738
739
740
STATUS 2 BYTES
MS CTR 4 BYTES
CH. ID 1 BYTE
SID 2 BYTES
RANG INFO. 7 BYTES
EQUALIZER COEFFS. 32 BYTES
8,9,...,15;0,1,...,7
PWR: 2 BYTES
FREQ: 2 BYTES
TIME: 3 BYTES

FIG.63

BIT FIELD	DEFINITION IF BIT[11]=1	DEFINITION IF BIT[11]=0
BIT[15:12]	DOCSIS IUC	RESERVED
BIT[11]	1:INDICATES 1ST. BLOCK OF TRANSMISSION	0:INDICATES NOT 1ST. BLOCK OF TRANSMISSION
BIT[10]	1:INDICATES LAST BLOCK OF TRANSMISSION	1:INDICATES LAST BLOCK OF TRANSMISSION
BIT[9]	1:INDICATES RANGING REQUIRED	RESERVED
BIT[8]	RESERVED	RESERVED
BIT[7:5]	000:FEC OK 001:CORRECTABLE FEC ERROR 010:UNCORRECTABLE FEC ERROR 011:NO UNIQUE WORD DETECTED 100:COLLIDED PACKET 101:NO ENERGY 110:PACKET LENGTH VIOLATION	000:FEC OK 001:CORRECTABLE FEC ERROR 010:UNCORRECTABLE FEC ERROR 011:NO UNIQUE WORD DETECTED 100:COLLIDED PACKET 101:NO ENERGY 110:PACKET LENGTH VIOLATION
BIT[4]	1:VALID MINISLOT COUNT PREPENDED	RESERVED
BIT[3]	1:VALID CHANNEL ID PREPENDED	RESERVED
BIT[2]	1:VALID SID PREPENDED	RESERVED
BIT[1]	1:RANGING INFO PREPENDED	RESERVED
BIT[0]	1:EQUALIZER COEFFICIENTS PREPENDED	RESERVED

FIG.64

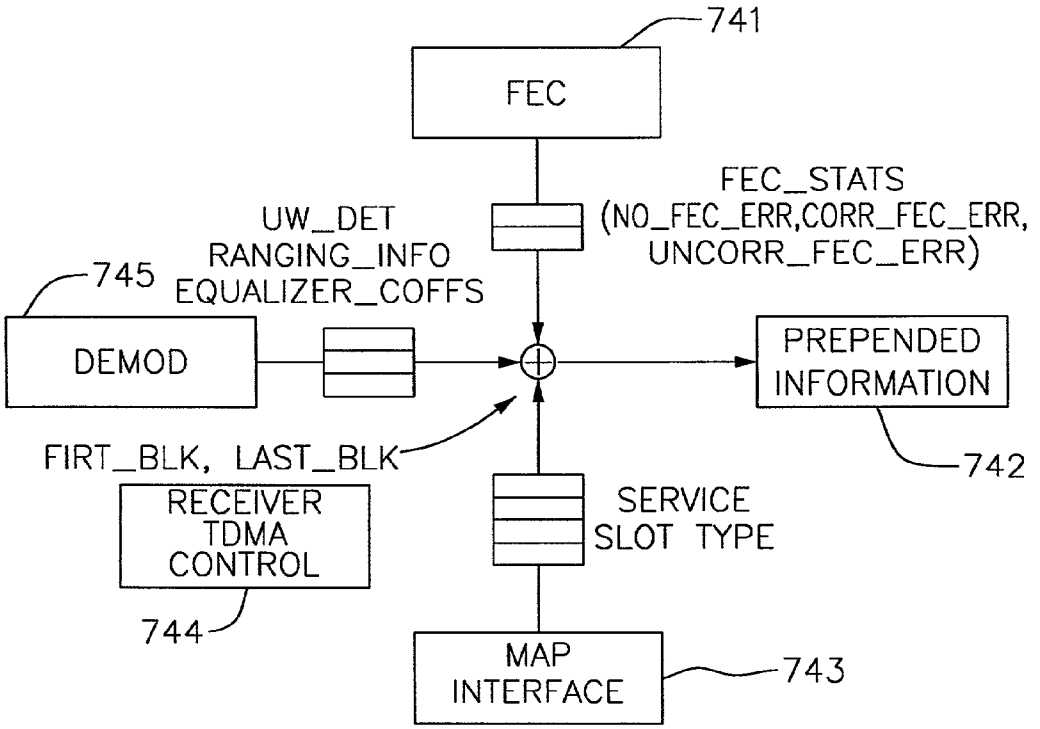
741
FEC
FEC_STATS
(NO_FEC_ERR,CORR_FEC_ERR,
UNCORR_FEC_ERR)
UW_DET
RANGING_INFO
EQUALIZER_COFFS
745
DEMOD
PREPENDED
INFORMATION
742
FIRT_BLK, LAST_BLK
RECEIVER
TDMA
CONTROL
744
SERVICE
SLOT TYPE
MAP
INTERFACE
743

FIG. 65

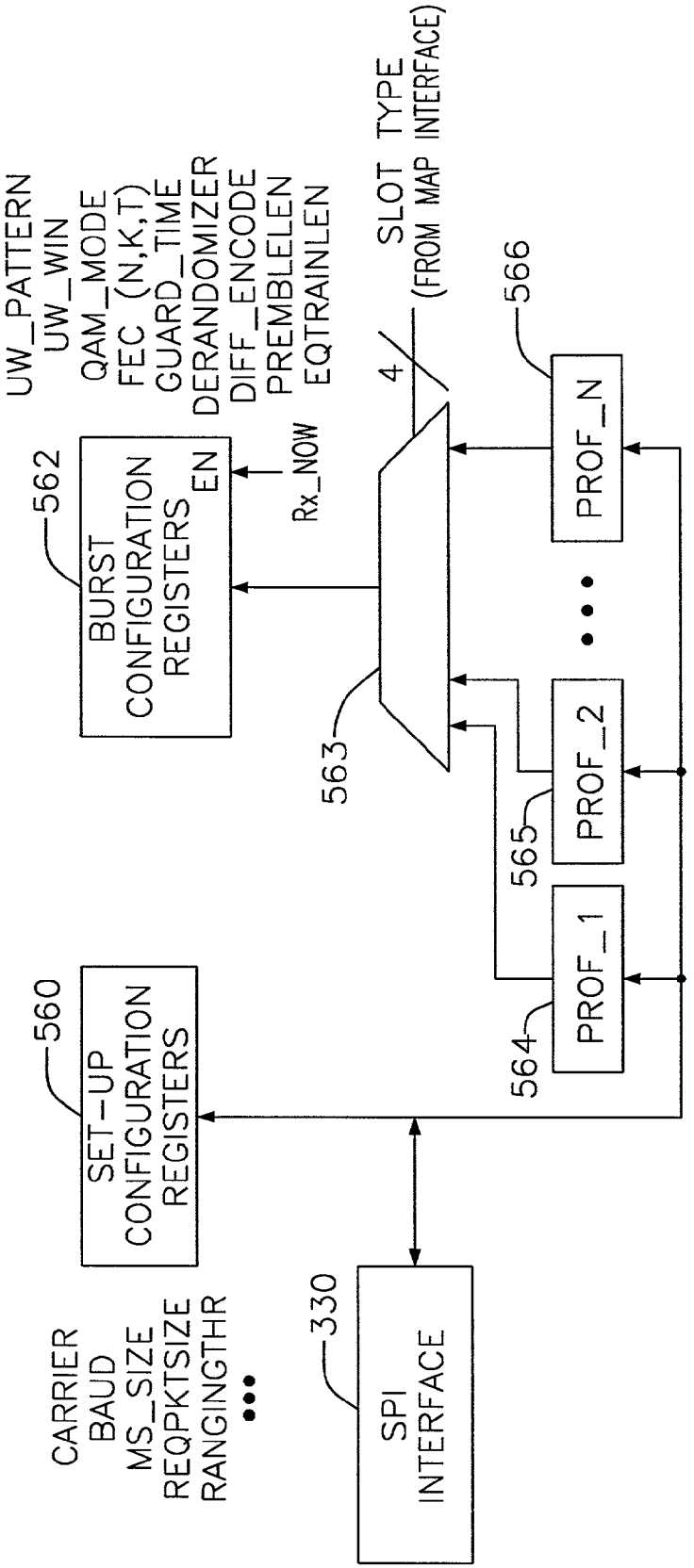
UW_PATTERN
UW_WIN
QAM_MODE
FEC (N,K,T)
GUARD_TIME
DERANDOMIZER
DIFF_ENCODE
PREMBLELEN
EQTRAINLEN
SLOT TYPE
(FROM MAP INTERFACE)
4
562
BURST CONFIGURATION REGISTERS
EN
Rx_NOW
563
566
PROF_N
PROF_2
PROF_1
565
564
560
SET-UP CONFIGURATION REGISTERS
CARRIER
BAUD
MS_SIZE
REQPKTSIZE
RANGINGTHR
330
SPI INTERFACE

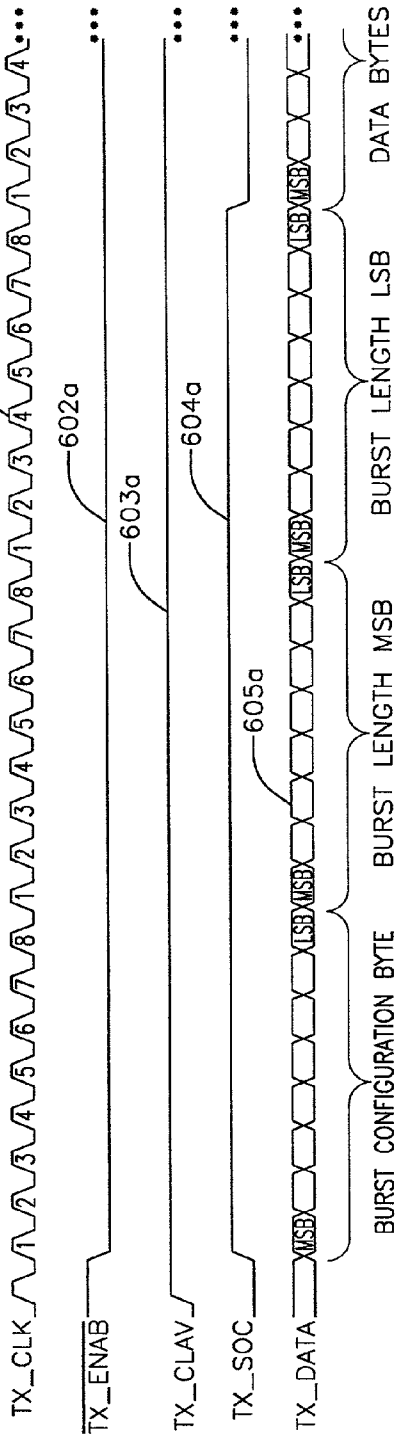
TX_CLK
TX_ENAB
TX_CLAV
TX_SOC
TX_DATA
601a
602a
603a
604a
605a
MSB
LSB
BURST CONFIGURATION BYTE
BURST LENGTH MSB
BURST LENGTH LSB
DATA BYTES

FIG. 66

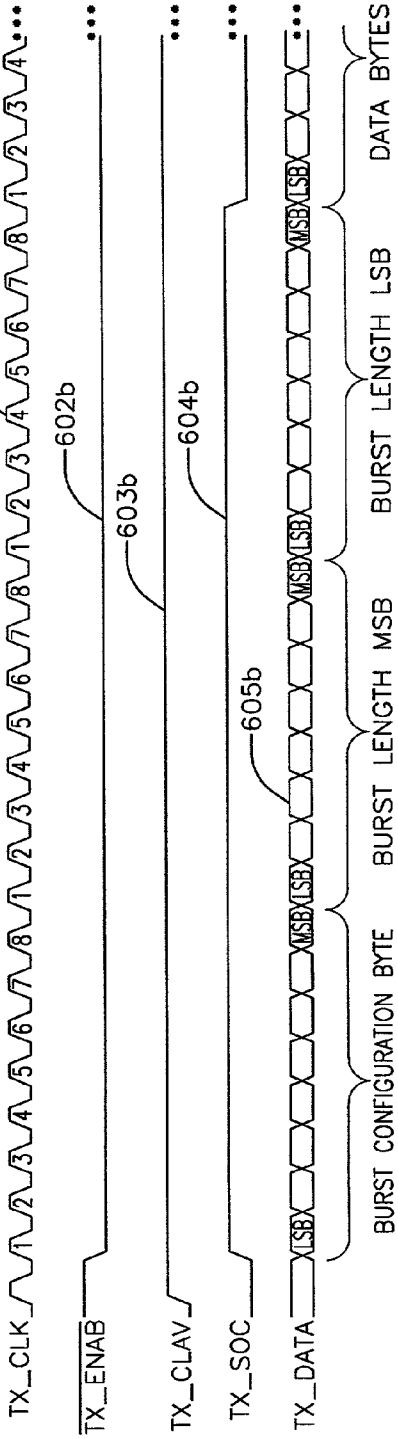
TX_CLK
TX_ENAB
TX_CLAV
TX_SOC
TX_DATA
601b
602b
603b
604b
605b
LSB
MSB
BURST CONFIGURATION BYTE
BURST LENGTH MSB
BURST LENGTH LSB
DATA BYTES

FIG. 67

FIG. 68

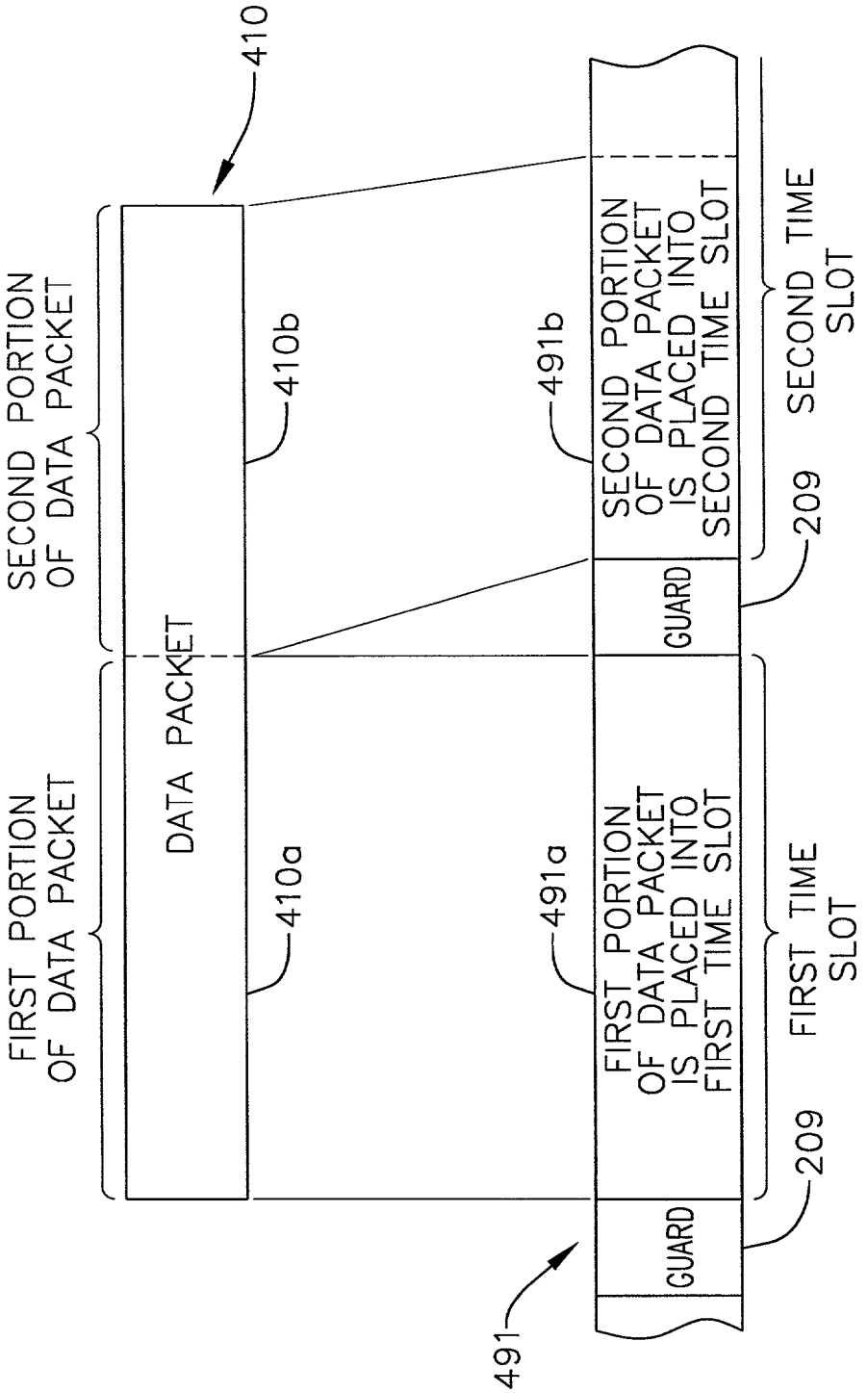
410
FIRST PORTION OF DATA PACKET
SECOND PORTION OF DATA PACKET
DATA PACKET
410a
410b
491
GUARD
FIRST PORTION OF DATA PACKET IS PLACED INTO FIRST TIME SLOT
491a
GUARD
SECOND PORTION OF DATA PACKET IS PLACED INTO SECOND TIME SLOT
491b
209
209
FIRST TIME SLOT
SECOND TIME SLOT

FIG.69

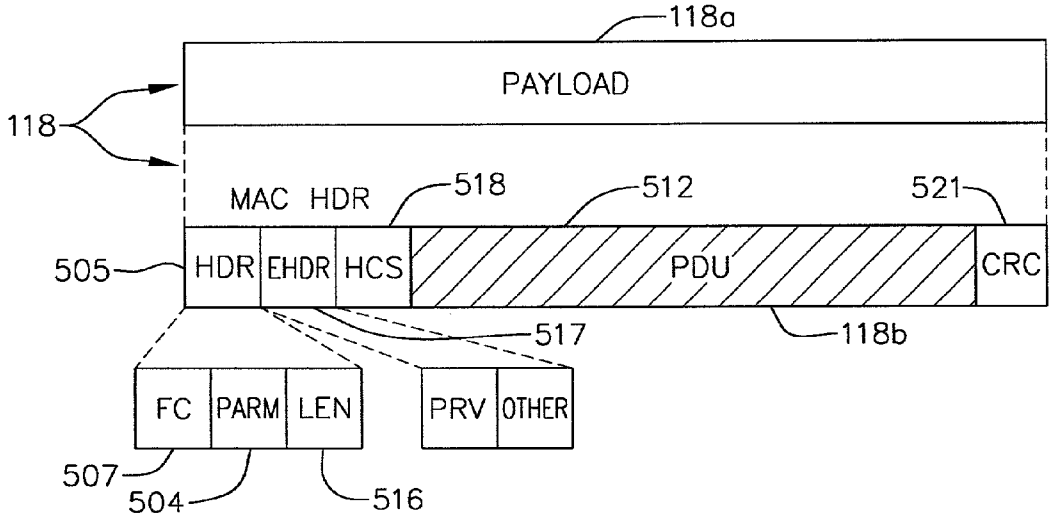
118a
PAYLOAD
118
MAC HDR
518
512
521
505
HDR
EHDR
HCS
PDU
CRC
517
118b
FC
PARM
LEN
PRV
OTHER
507
504
516

FIG.70

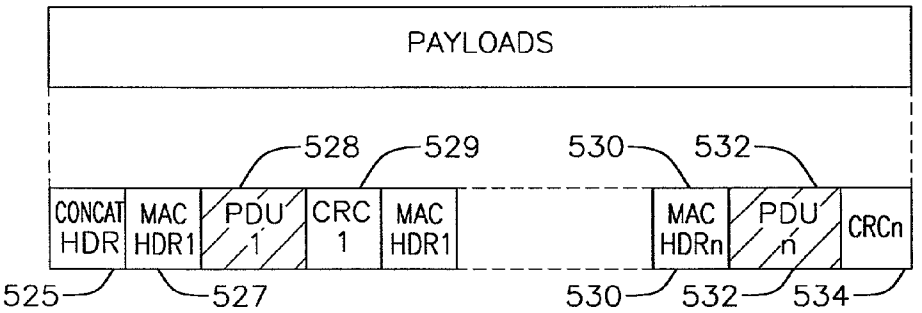
PAYLOADS
528
529
530
532
CONCAT HDR
MAC HDR1
PDU 1
CRC 1
MAC HDR1
MAC HDRn
PDU n
CRCn
525
527
530
532
534

FIG. 71

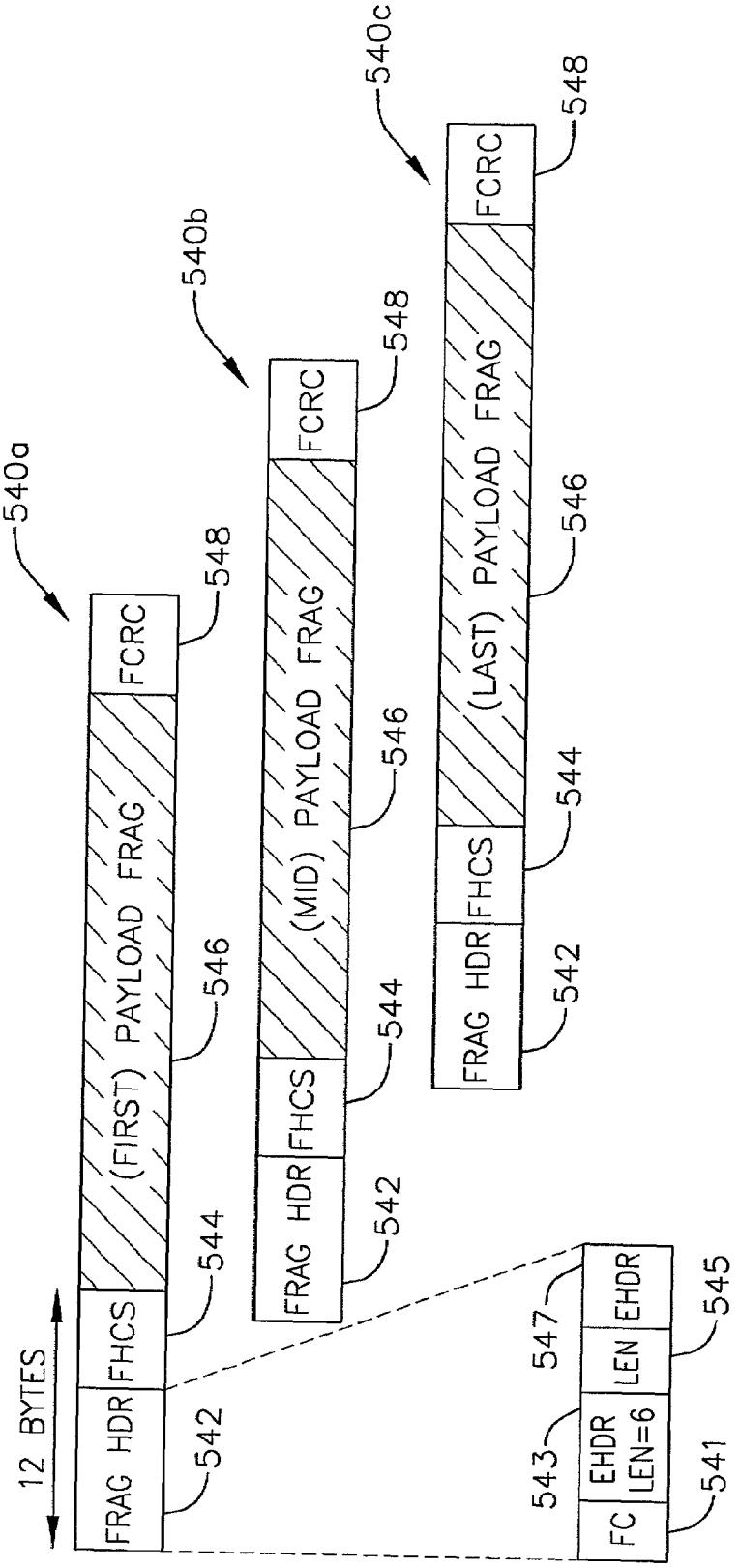
540a
540b
540c
12 BYTES
FRAG HDR
FHCS
(FIRST) PAYLOAD FRAG
FCRC
(MID) PAYLOAD FRAG
(LAST) PAYLOAD FRAG
FC
EHDR LEN=6
LEN
EHDR
541
542
543
544
545
546
547
548

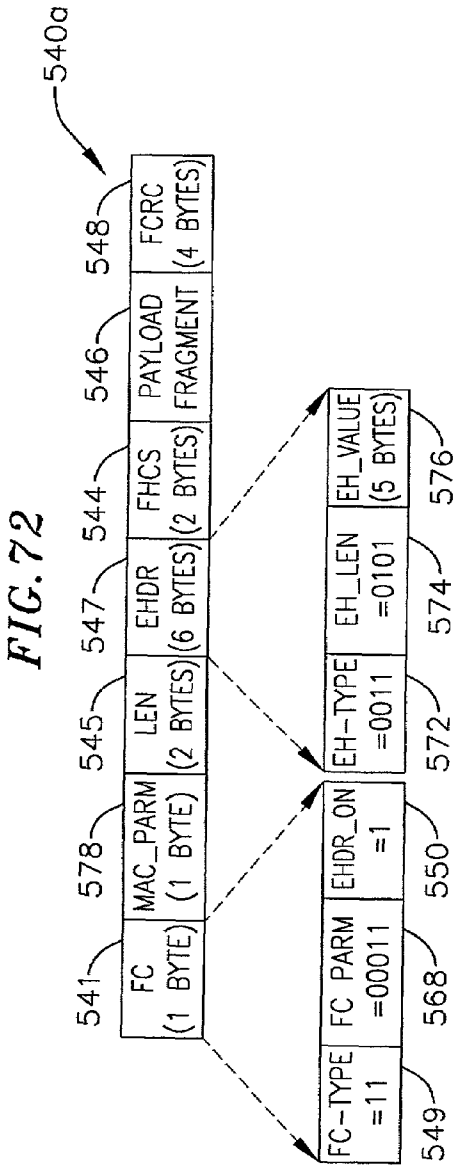

FIG. 72

FIG. 73

FIELD	USAGE	SIZE
FC	FC_TYPE=11;MAC-SPECIFIC HEADER FC_PARM [4:0]=00011;FRAGMENTATION MAC HEADER EHDR_ON = 1;FRAGMENTATION EHDR FOLLOWS	8 BITS
MAC_PARM	ELEN = 6 BYTES;LENGTH OF FRAGMENTATION EHDR	8 BITS
LEN	LEN = n+10;TOTAL LENGTH OF THIS FRAGMENT INCLUDING PAYLOAD, EHDR, FCRC	16 BITS

FIG. 74

FIELD	USAGE	SIZE	
EHDR	EH_TYPE=3;SAME TYPE AS BP_UP EH_LEN=5;LENGTH OF THIS EHDR KEY_SEQ;SAME AS IN BP_UP VER=0001;VERSION NUMBER FOR THIS EHDR ENABLE IF ENABLE=0, BPI DISABLED IF ENABLE=1, BPI ENABLED TOGGLE BIT;SAME AS IN BP_UP SID;SERVICE ID ASSOCIATED WITH THIS FRAGMENT REQ;NUMBER OF MINI-SLOTS FOR A PIGGYBACK REQUEST RESERVED;MUST BE SET TO ZERO FIRST_FRAG;SET TO ONE FOR FIRST FRAGMENT ONLY LAST_FRAG;SET TO ONE FOR LAST FRAGMENT ONLY FRAG_SEQ;FRAGMENT SEQUENCE COUNT, INCREMENTED FOR EACH FRAGMENT, SET TO ZERO FOR FIRST FRAGMENT	4 BITS 4 BITS 4 BITS 4 BITS 1 BIT 1 BIT 14 BITS 8 BITS 2 BITS 1 BIT 1 BIT 4 BITS	6 BYTES
FHCS	MAC HEADER CHECK SEQUENCE		2 BYTES
PAYLOAD	FRAGMENT PAYLOAD;PORTION OF TOTAL MAC PDU BEING SENT		n BYTES
FCRC	CRC ACROSS FRAGMENT PAYLOAD		4 BYTES
	LENGTH OF A MAC FRAGMENT FRAME	n + 16 BYTES	

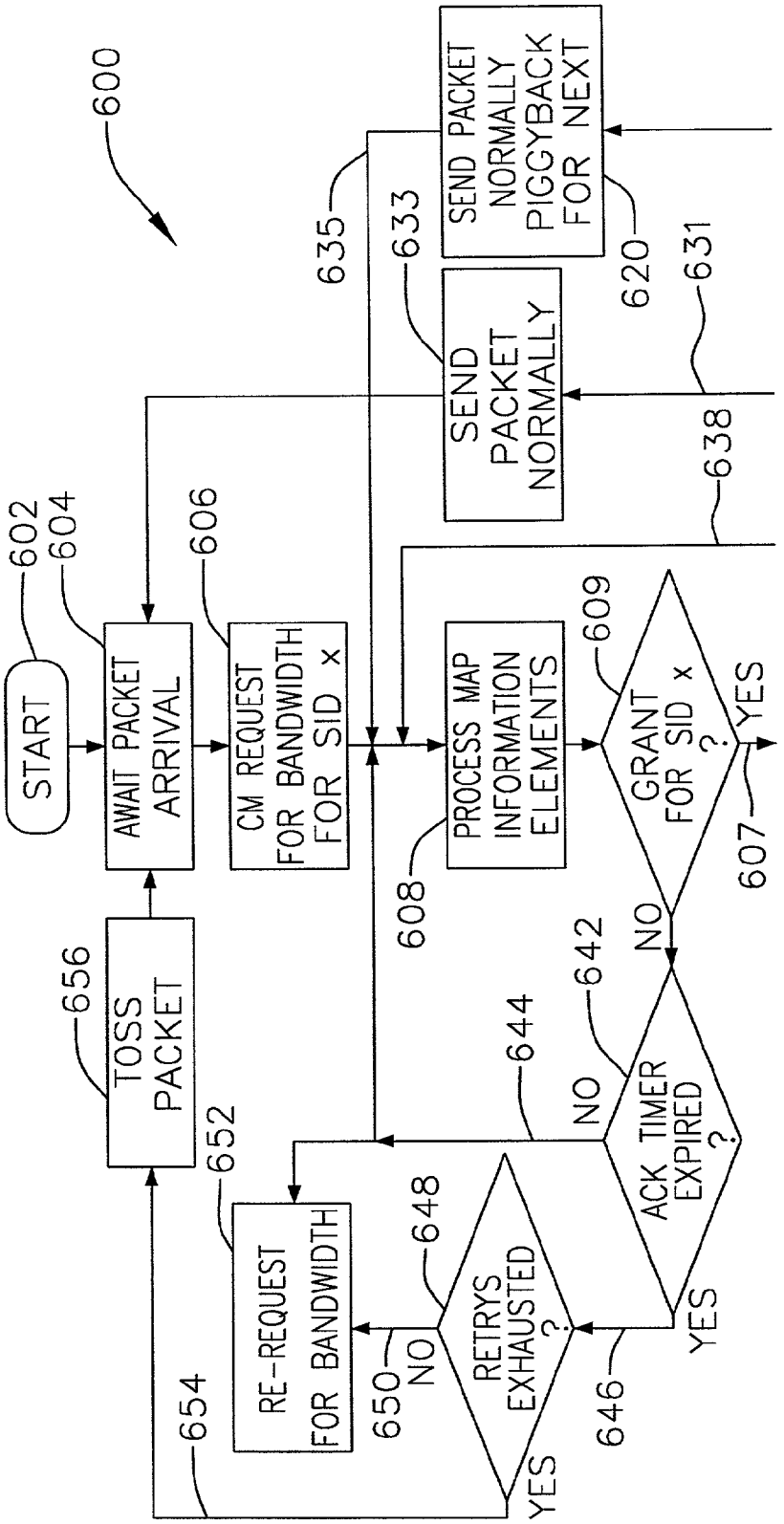
600
START
602
AWAIT PACKET ARRIVAL
604
CM REQUEST FOR BANDWIDTH FOR SID x
606
PROCESS MAP INFORMATION ELEMENTS
608
GRANT FOR SID x ?
609
YES
607
NO
ACK TIMER EXPIRED ?
642
NO
644
YES
646
RETRYS EXHAUSTED ?
648
NO
650
YES
RE-REQUEST FOR BANDWIDTH
652
TOSS PACKET
656
654
SEND PACKET NORMALLY
633
SEND PACKET NORMALLY PIGGYBACK FOR NEXT
620
635
631
638

FIG. 75

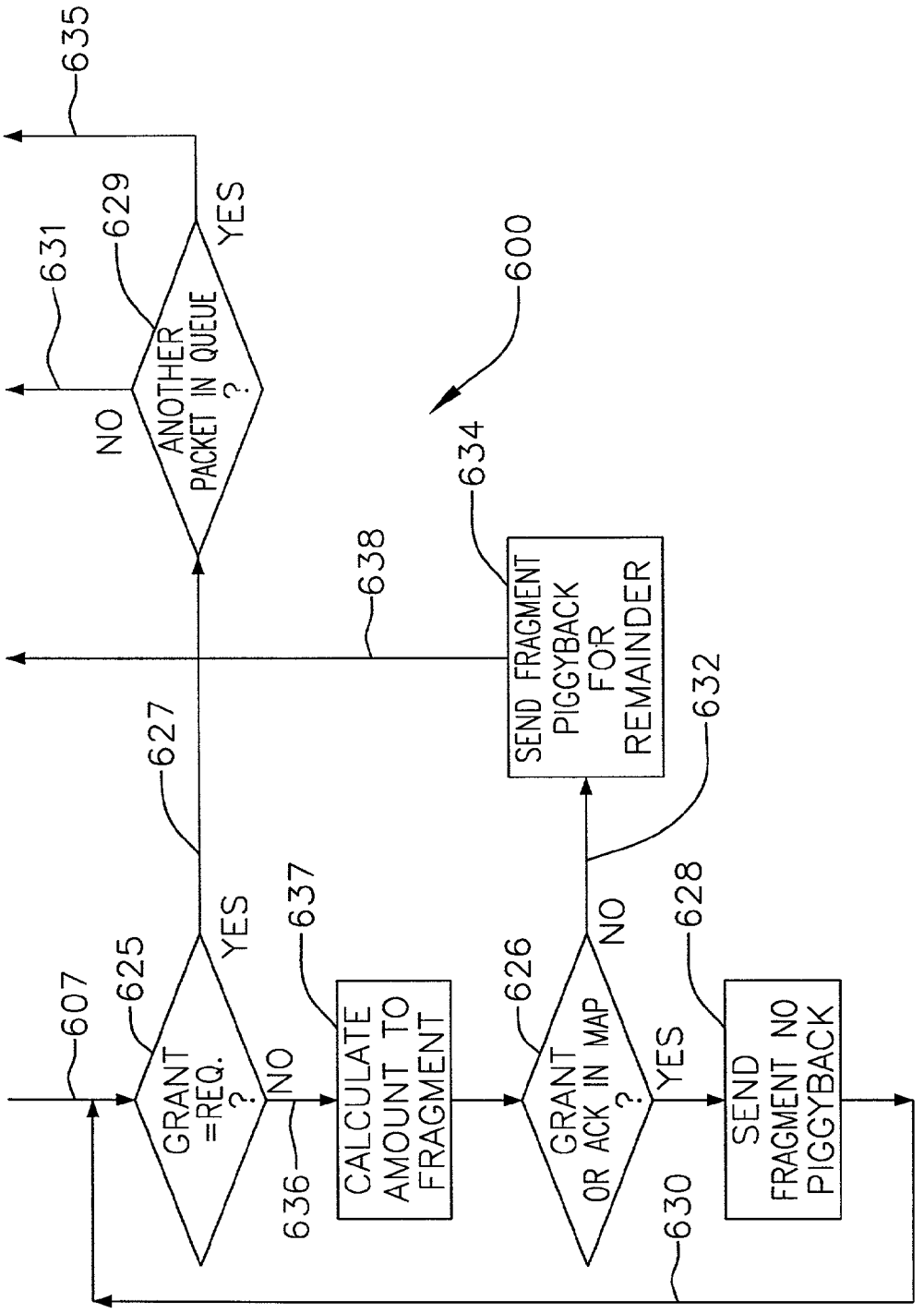
600
607
625
GRANT =REQ. ?
YES
NO
627
636
637
CALCULATE AMOUNT TO FRAGMENT
626
GRANT OR ACK IN MAP ?
NO
YES
632
628
SEND FRAGMENT NO PIGGYBACK
630
634
SEND FRAGMENT PIGGYBACK FOR REMAINDER
638
629
ANOTHER PACKET IN QUEUE ?
YES
NO
631
635

FIG. 76

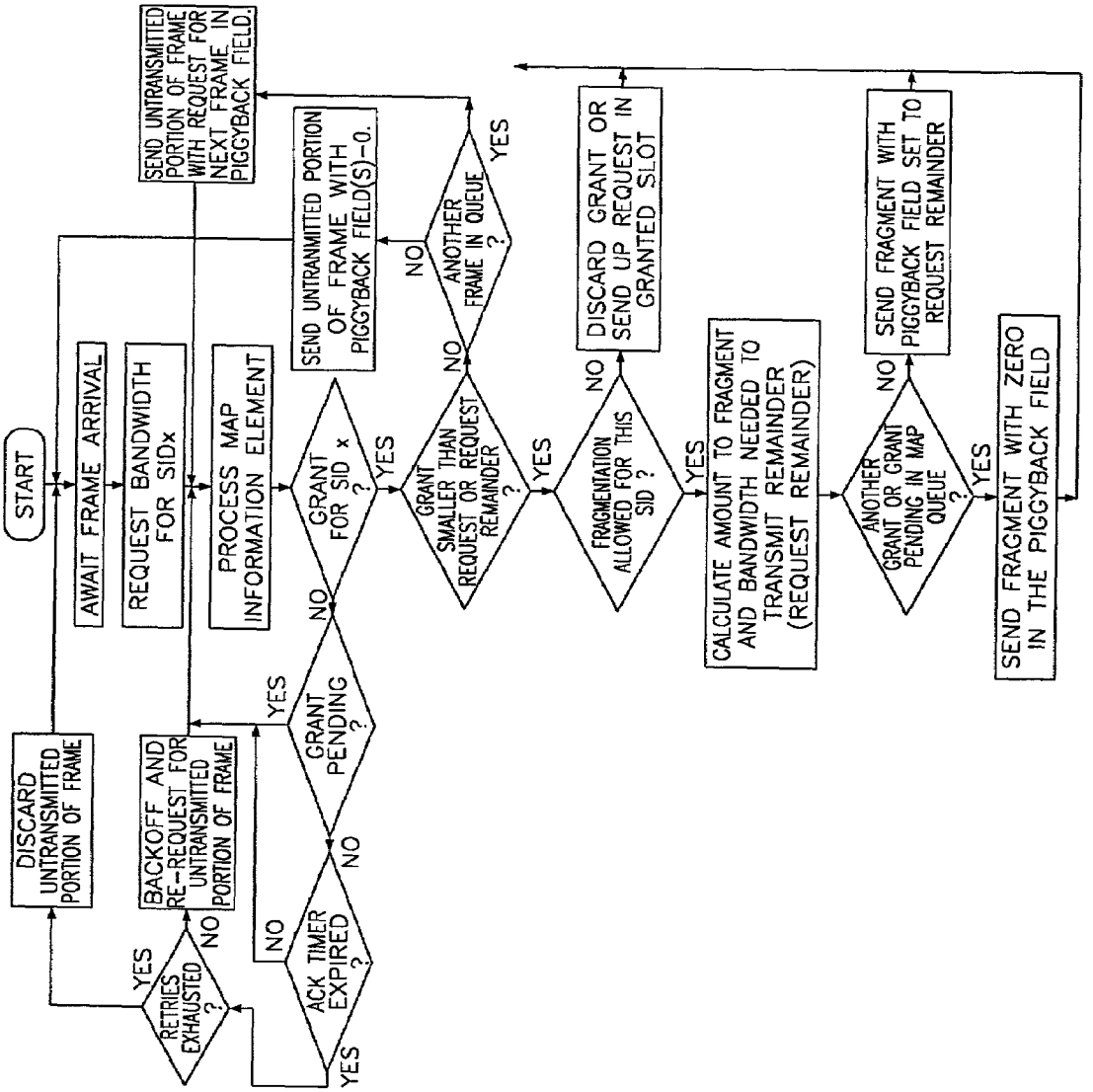
START
AWAIT FRAME ARRIVAL
REQUEST BANDWIDTH FOR SIDx
PROCESS MAP INFORMATION ELEMENT
GRANT FOR SID x ?
YES
NO
GRANT PENDING ?
YES
NO
ACK TIMER EXPIRED ?
YES
NO
RETRIES EXHAUSTED ?
YES
NO
DISCARD UNTRANSMITTED PORTION OF FRAME
BACKOFF AND RE-REQUEST FOR UNTRANSMITTED PORTION OF FRAME
SEND UNTRANSMITTED PORTION OF FRAME WITH PIGGYBACK FIELD(S)=0.
SEND UNTRANSMITTED PORTION OF FRAME WITH REQUEST FOR NEXT FRAME IN PIGGYBACK FIELD.
GRANT SMALLER THAN REQUEST OR REQUEST REMAINDER ?
YES
NO
ANOTHER FRAME IN QUEUE ?
YES
NO
FRAGMENTATION ALLOWED FOR THIS SID ?
YES
NO
DISCARD GRANT OR SEND UP REQUEST IN GRANTED SLOT
CALCULATE AMOUNT TO FRAGMENT AND BANDWIDTH NEEDED TO TRANSMIT REMAINDER (REQUEST REMAINDER)
ANOTHER GRANT OR GRANT PENDING IN MAP QUEUE ?
YES
NO
SEND FRAGMENT WITH ZERO IN THE PIGGYBACK FIELD
SEND FRAGMENT WITH PIGGYBACK FIELD SET TO REQUEST REMAINDER

FIG. 77

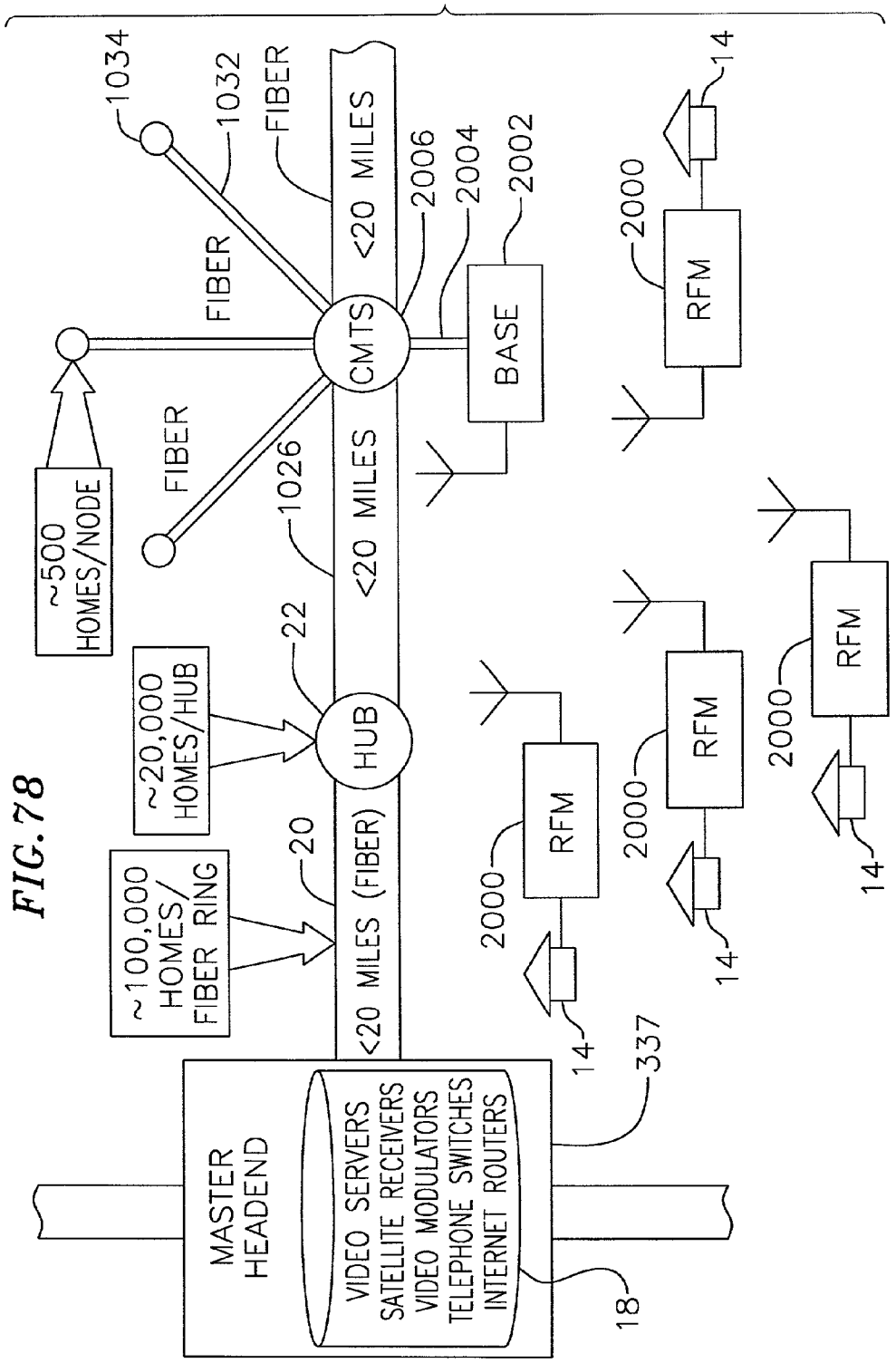
1034
1032
FIBER
FIBER
FIBER
<20 MILES
2006
2004
2002
CMTS
BASE
~500 HOMES/NODE
1026
<20 MILES
22
HUB
~20,000 HOMES/HUB
20
~100,000 HOMES/ FIBER RING
<20 MILES (FIBER)
MASTER HEADEND
VIDEO SERVERS
SATELLITE RECEIVERS
VIDEO MODULATORS
TELEPHONE SWITCHES
INTERNET ROUTERS
18
337
RFM
2000
14

FIG. 78

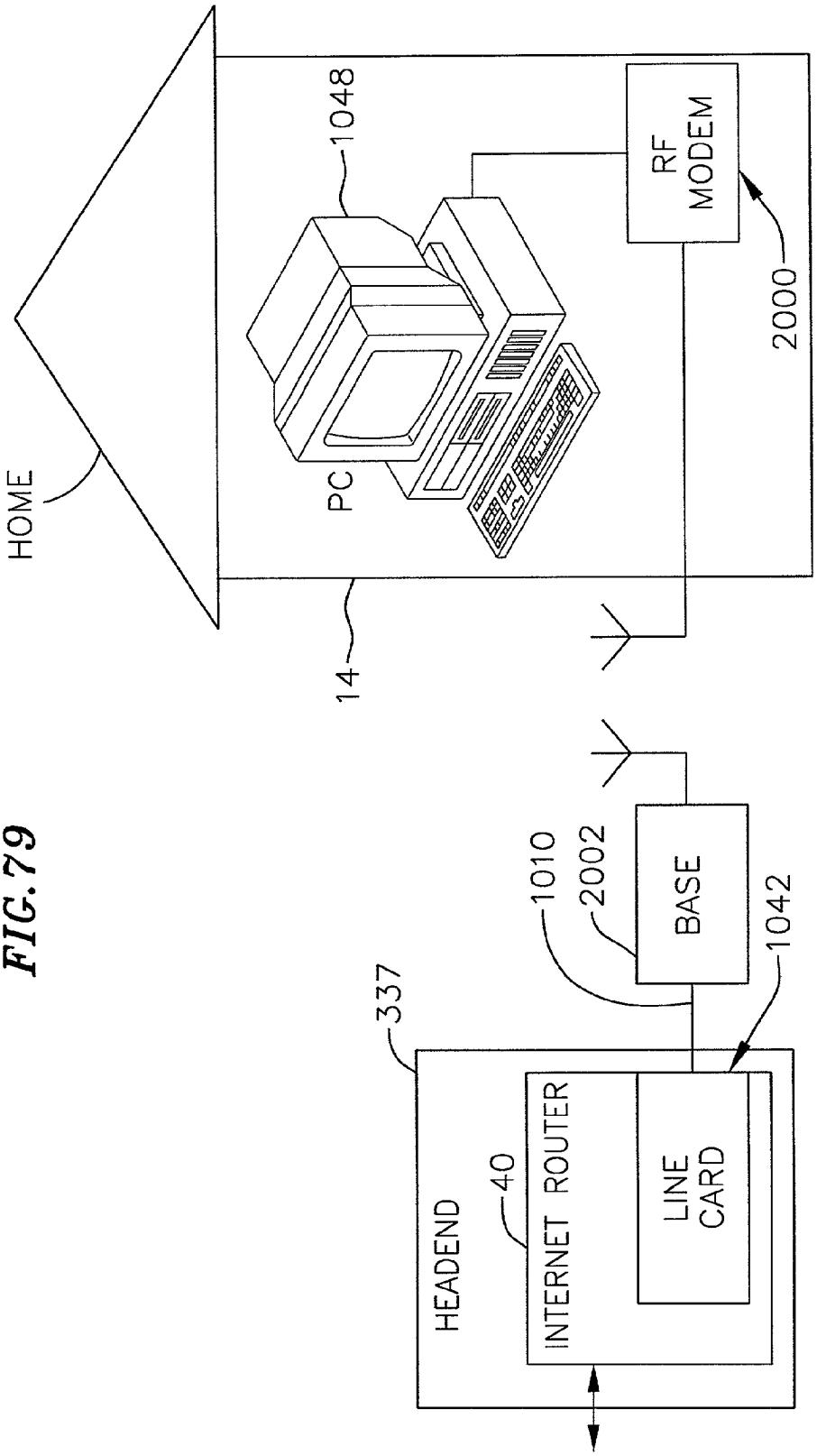
HOME
14
PC
1048
RF MODEM
2000
BASE
1010
2002
1042
337
HEADEND
40
INTERNET ROUTER
LINE CARD

FIG. 79

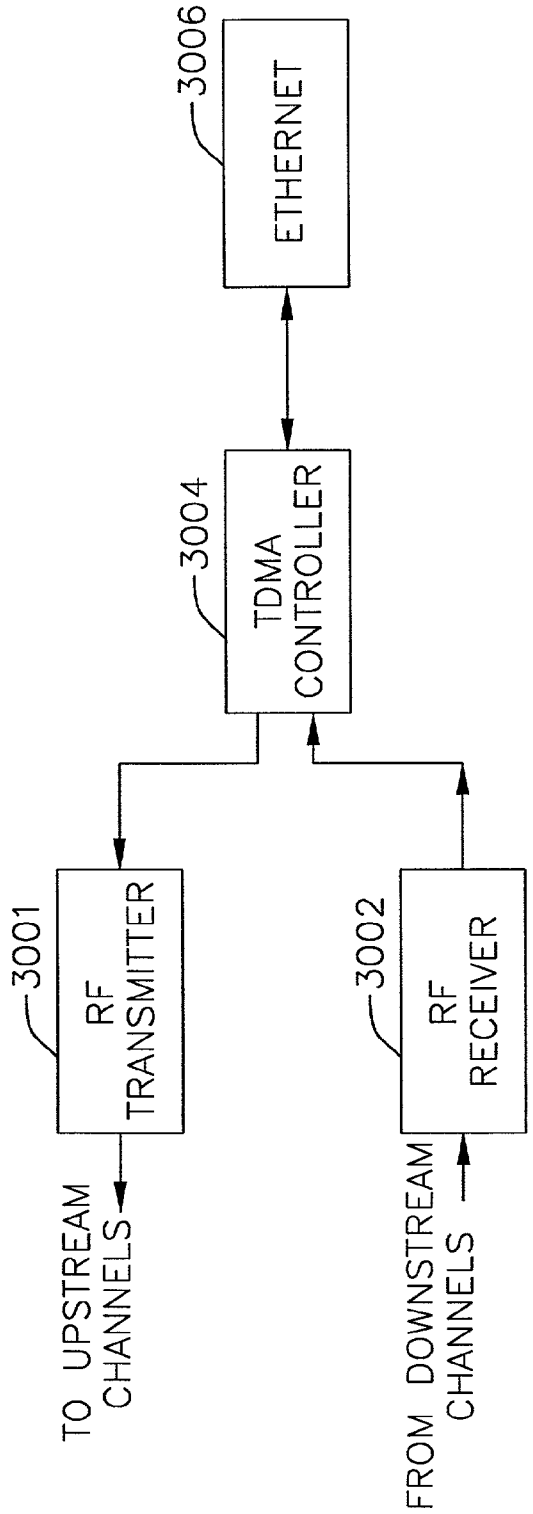
3006
ETHERNET
3004
TDMA CONTROLLER
3001
RF TRANSMITTER
3002
RF RECEIVER
TO UPSTREAM CHANNELS
FROM DOWNSTREAM CHANNELS

FIG. 80

FIG. 81

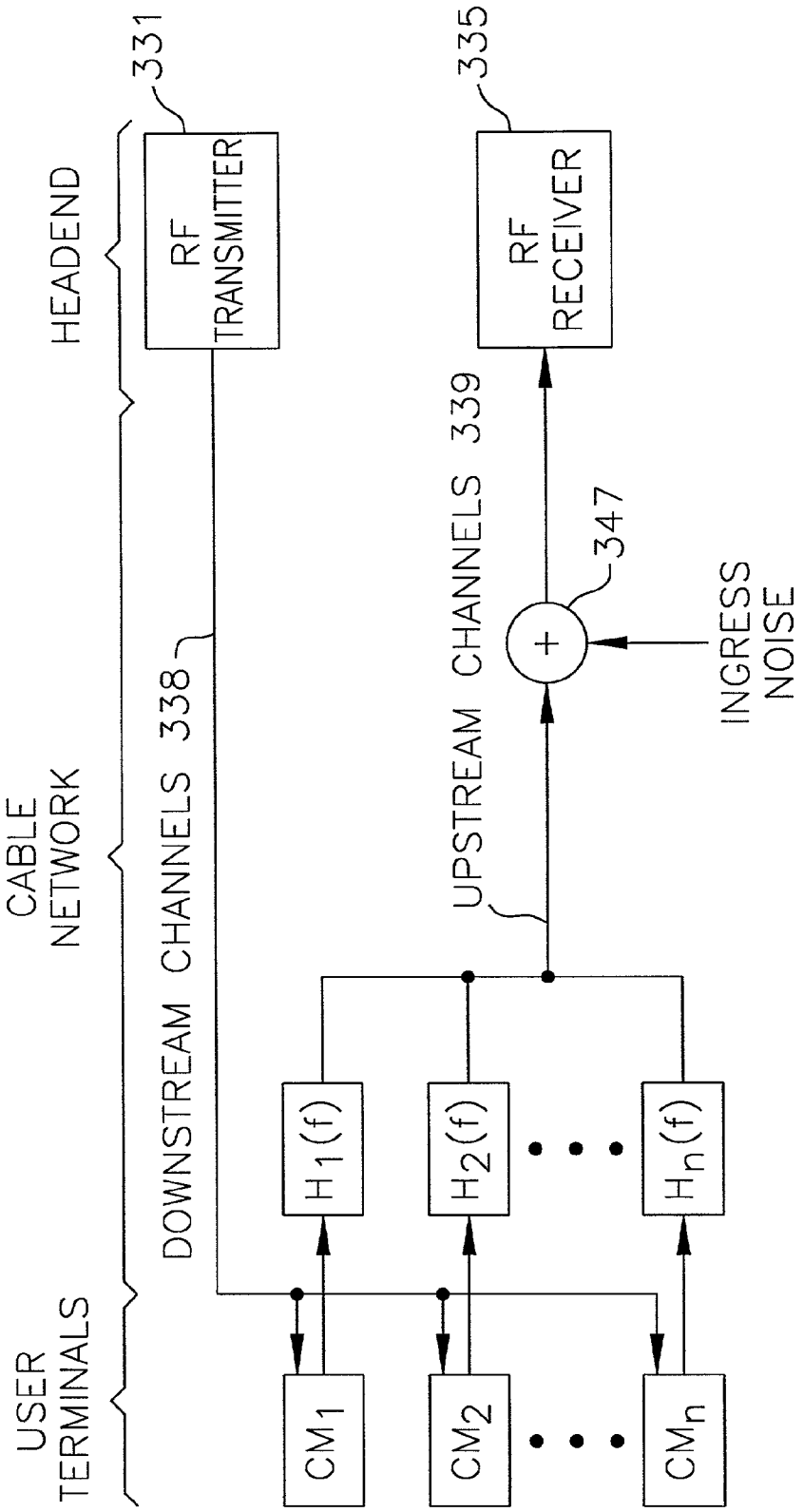
HEADEND
CABLE NETWORK
USER TERMINALS
331
RF TRANSMITTER
335
RF RECEIVER
DOWNSTREAM CHANNELS 338
UPSTREAM CHANNELS 339
347
INGRESS NOISE
H1(f)
H2(f)
Hn(f)
CM1
CM2
CMn

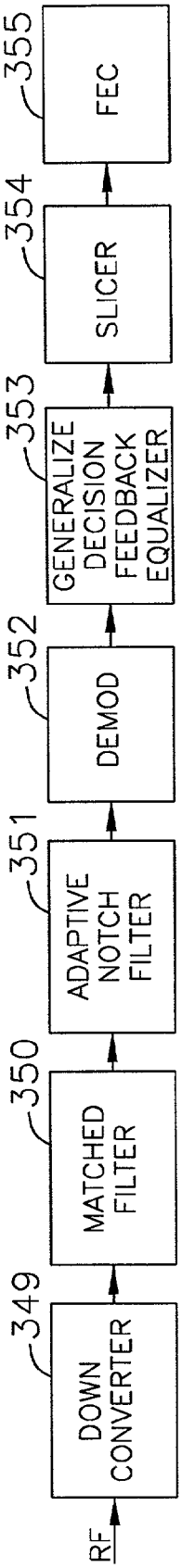
RF
349
DOWN CONVERTER
350
MATCHED FILTER
351
ADAPTIVE NOTCH FILTER
352
DEMOD
353
GENERALIZE DECISION FEEDBACK EQUALIZER
354
SLICER
355
FEC

FIG. 82

FIG.83

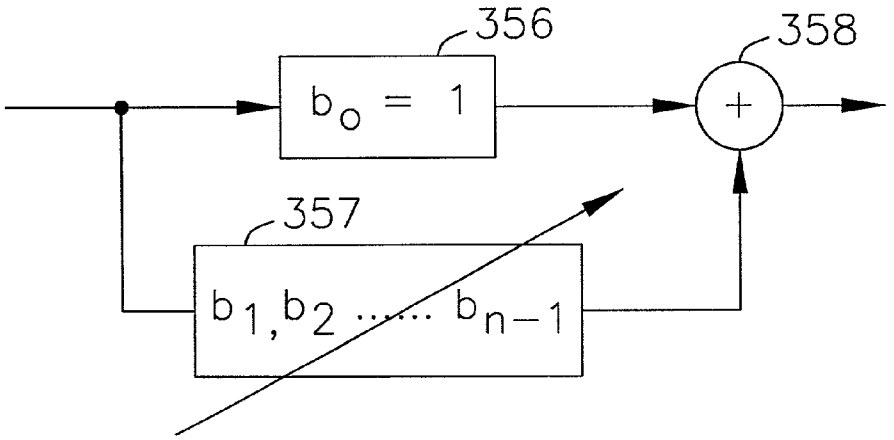
356
358
$b_o = 1$
+
357
$b_1, b_2 \ldots\ldots b_{n-1}$

FIG.84

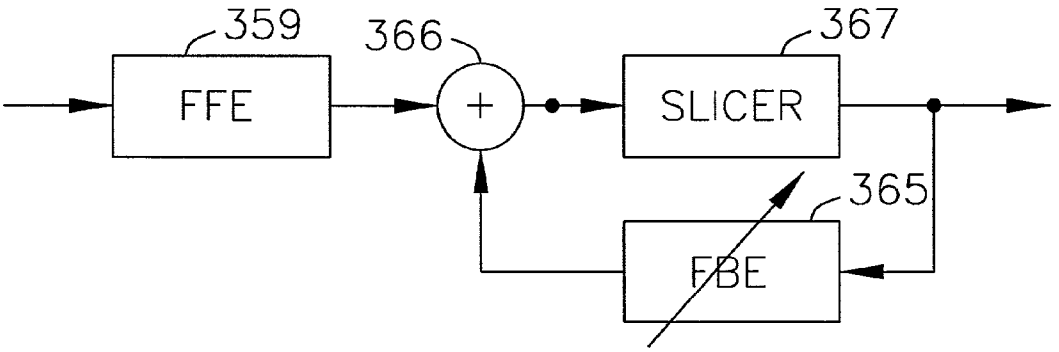
359
366
367
FFE
+
SLICER
365
FBE

FIG. 85

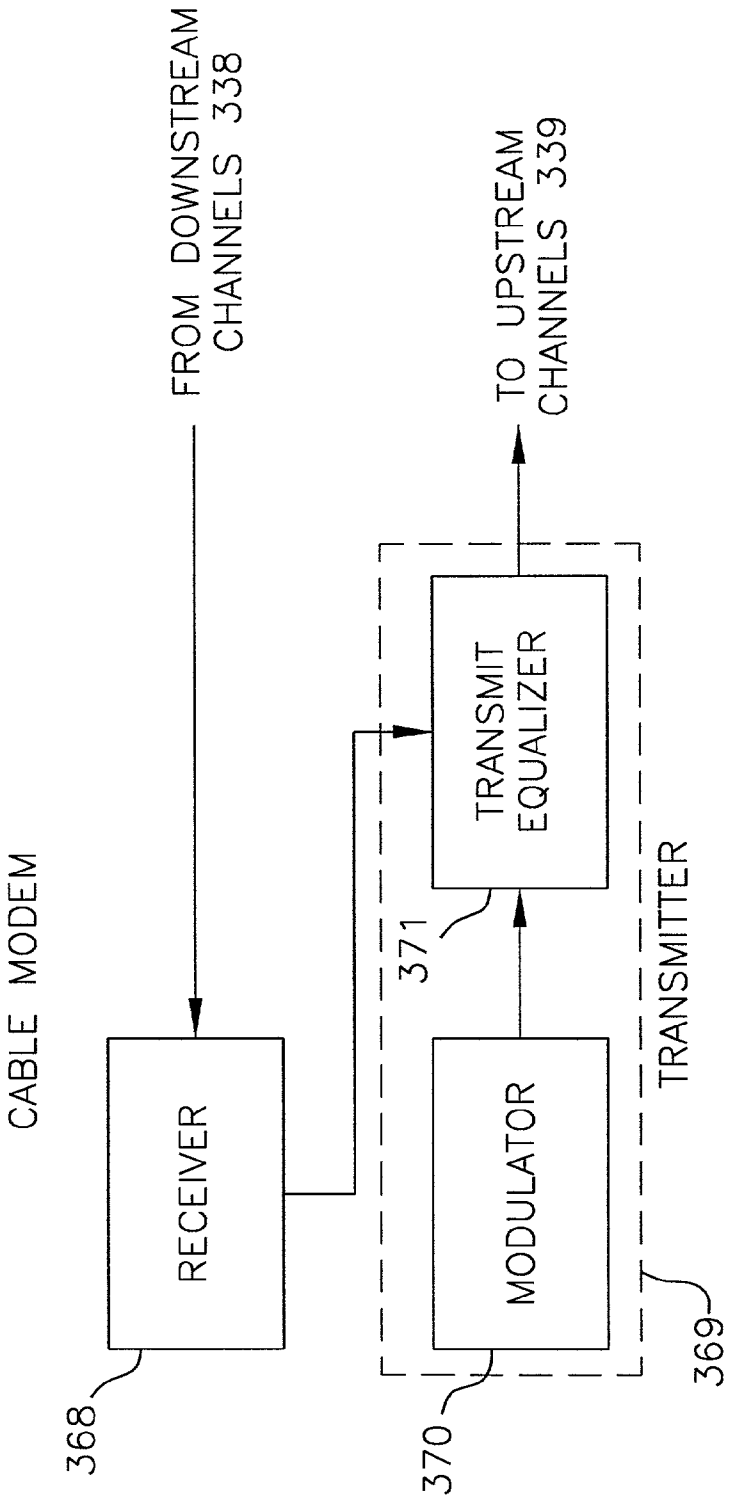
CABLE MODEM
FROM DOWNSTREAM CHANNELS 338
TO UPSTREAM CHANNELS 339
RECEIVER
TRANSMIT EQUALIZER
MODULATOR
TRANSMITTER
368
369
370
371

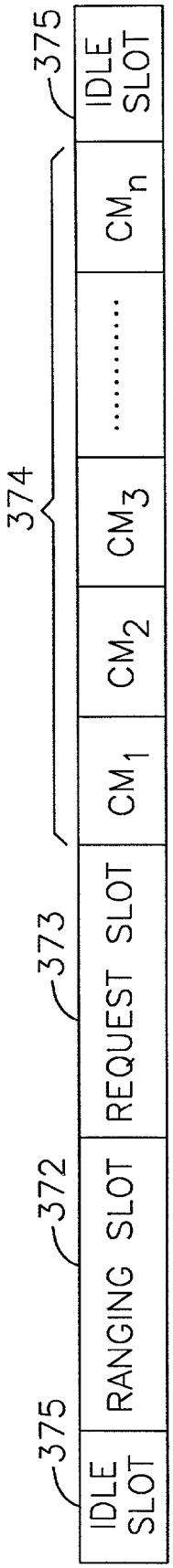
375
IDLE SLOT
372
RANGING SLOT
373
REQUEST SLOT
374
CM1
CM2
CM3
.....
CMn
375
IDLE SLOT

FIG. 86

FIG.87

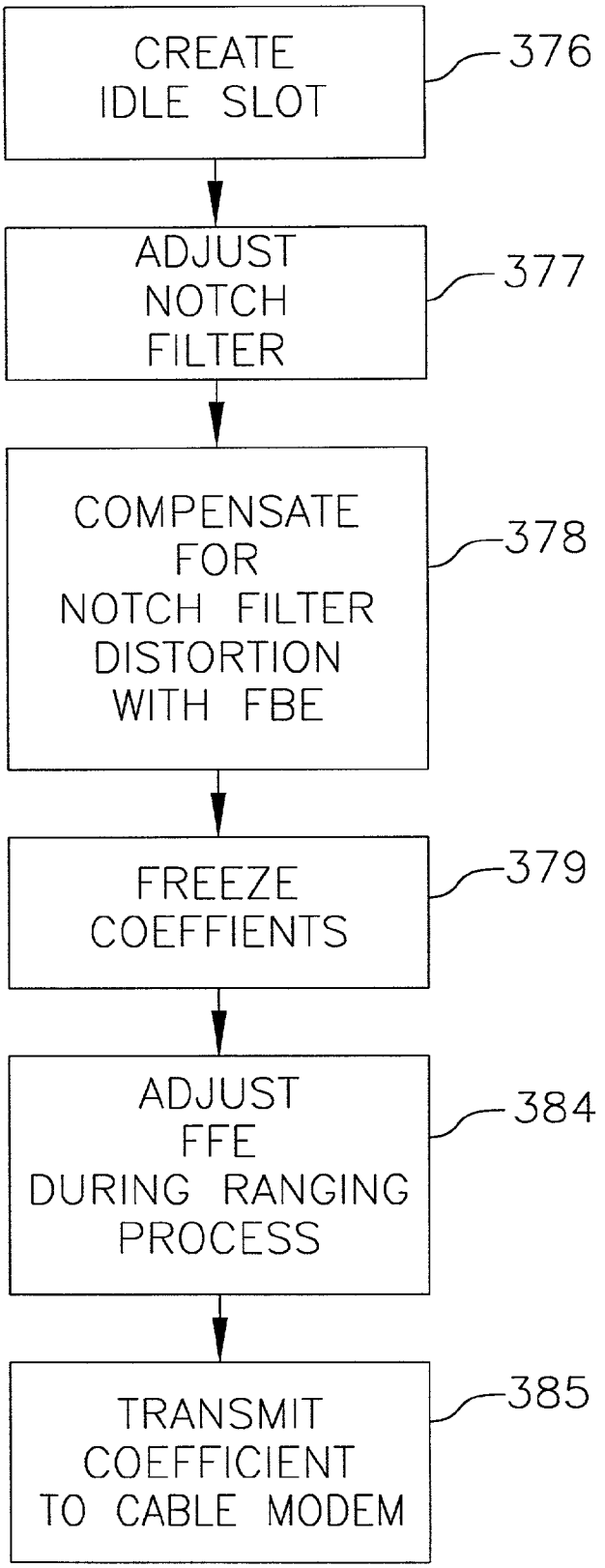
CREATE IDLE SLOT
376
ADJUST NOTCH FILTER
377
COMPENSATE FOR NOTCH FILTER DISTORTION WITH FBE
378
FREEZE COEFFIENTS
379
ADJUST FFE DURING RANGING PROCESS
384
TRANSMIT COEFFICIENT TO CABLE MODEM
385

FIG. 88A

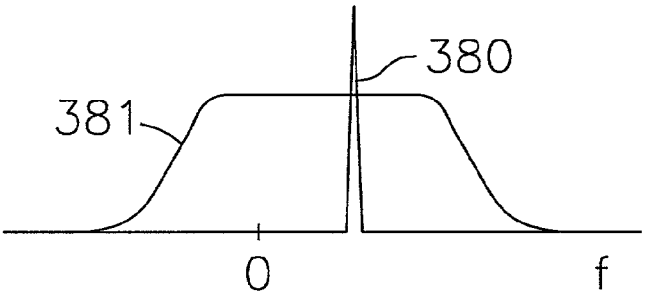

FIG. 88B

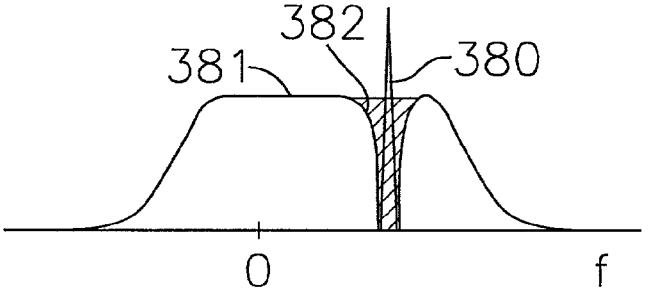

FIG. 88C

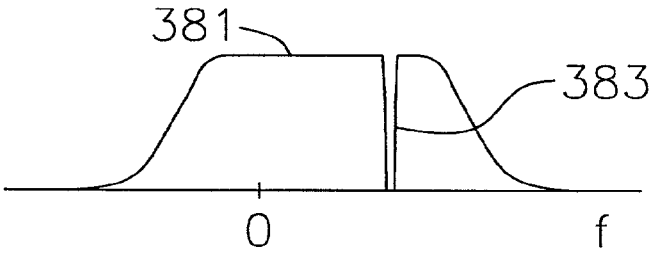

FIG.89A

16-QAM CONSTELLATION
BEFORE NOISE REJECTION

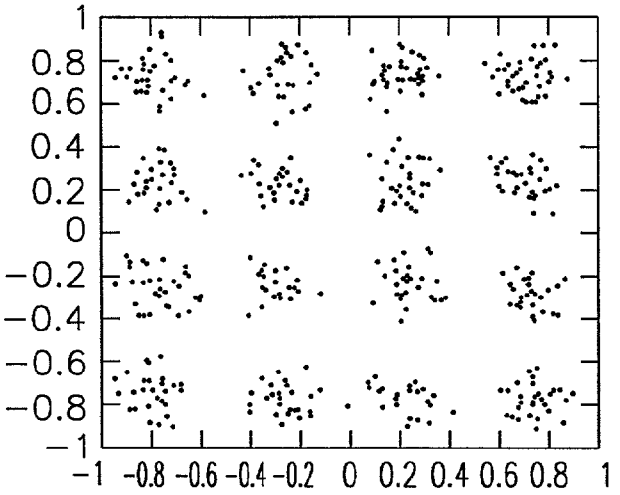

FIG.89B

16-QAM CONSTELLATION
AFTER NOISE REJECTION

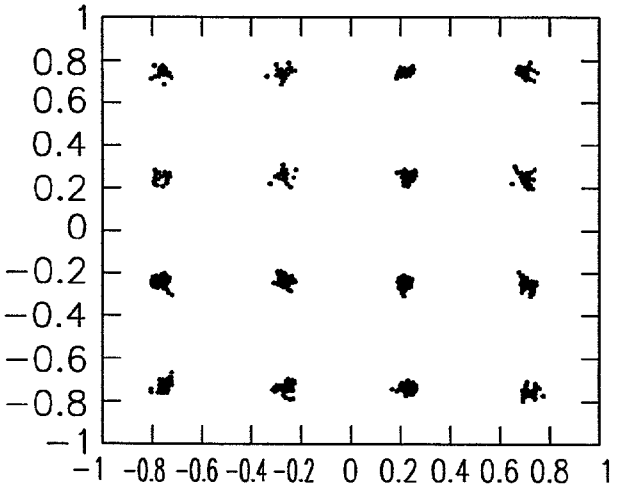

FIG. 90A

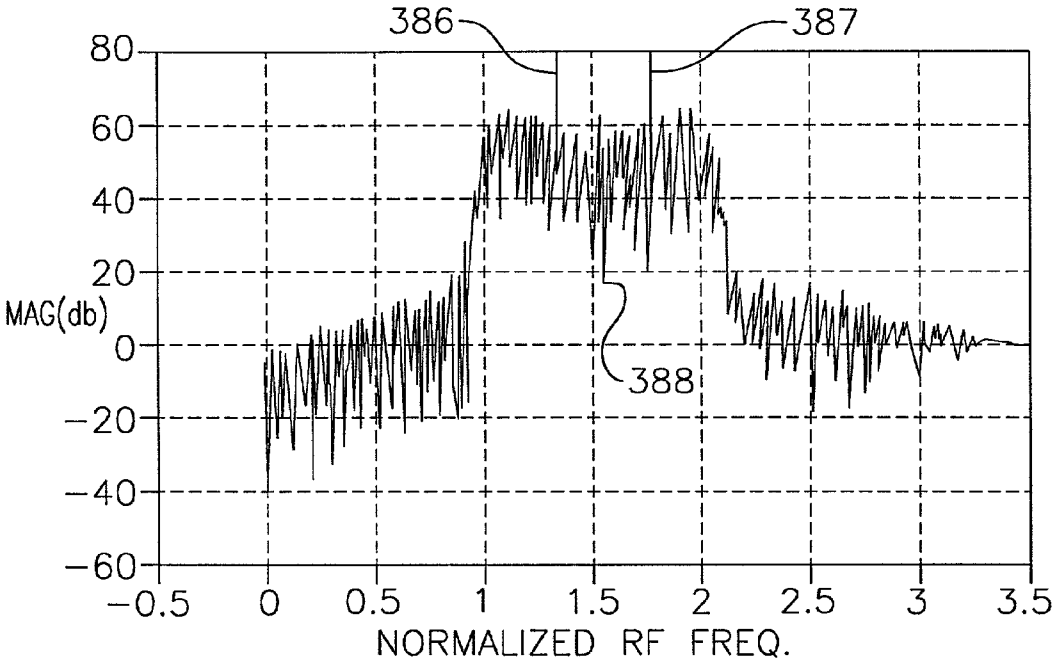

FIG. 90B

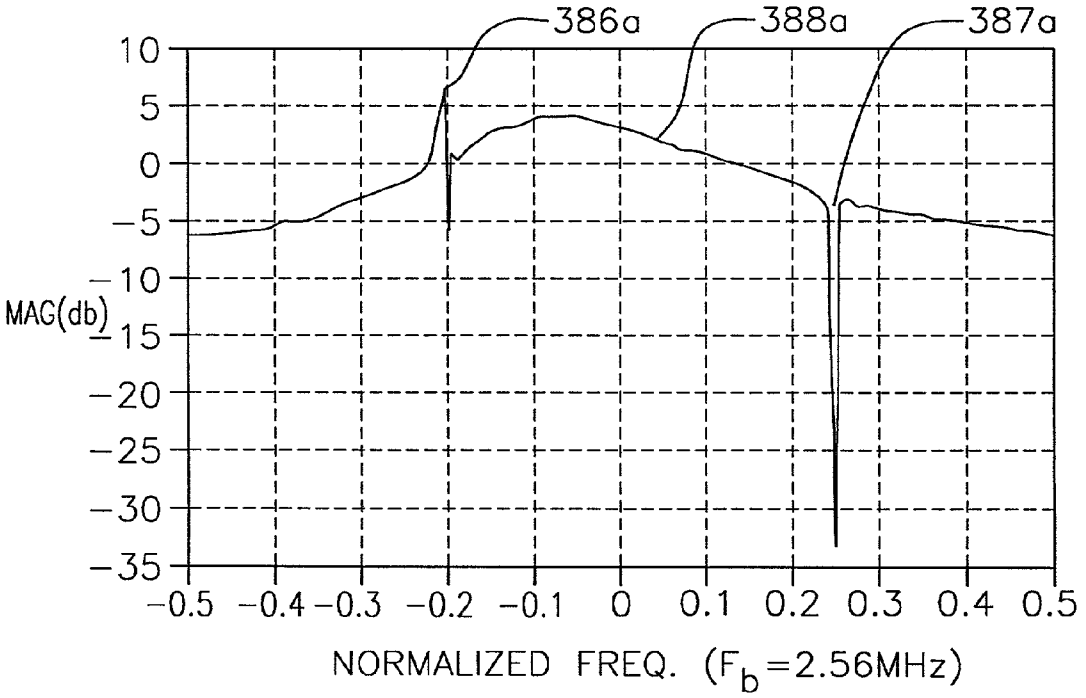

ROBUST TECHNIQUES FOR OPTIMAL UPSTREAM COMMUNICATION BETWEEN CABLE MODEM SUBSCRIBERS AND A HEADEND

CROSS-REFERENCE TO RELATED APPLICATIONS

This application is a continuation of U.S. application Ser. No. 09/574,558, filed on May 19, 2000, now U.S. Pat. No. 6,650,624 which is a continuation-in-part of U.S. regular application Ser. No. 09/430,821, filed on Oct. 29, 1999, which claimed the benefit of the filing date of U.S. Provisional Patent Application No. 60/106,264, filed Oct. 30, 1998 and entitled HEADEND UPSTREAM MAC/PHY INTERFACE; U.S. Provisional Patent Application No. 60/106,427, filed Oct. 30, 1998 and entitled ROBUST TECHNIQUE FOR OPTIMAL UPSTREAM COMMUNICATION BETWEEN CABLE MODEM SUBSCRIBER AND A HEADEND; U.S. Provisional Patent Application No. 60/106,438, filed Oct. 30, 1998 and entitled SYSTEM FOR, AND METHOD OF, FRAGMENTING DATA PACKETS IN A CABLE MODEM SYSTEM; U.S. Provisional Patent Application No. 60/106,439, filed Oct. 30, 1998 and entitled CABLE MODEM SYSTEM; U.S. Provisional Patent Application No. 60/106,440, filed Oct. 30, 1998 and entitled NETWORK DATA TRANSMISSION SYNCHRONIZATION SYSTEM AND METHOD; U.S. Provisional Patent Application No. 60/106,441, filed Oct. 30, 1998 and entitled BURST RECEIVER SYSTEM, the entire contents of all of which are hereby expressly incorporated by reference.

FIELD OF THE INVENTION

The present invention relates generally to communication systems. The present invention relates more particularly to a cable modem system wherein information is communicated between a plurality of cable modems and a cable modem termination system.

BACKGROUND OF THE INVENTION

The desired solution for high speed data communications appears to be cable modem. Cable modem is capable of providing data rates as high as 56 Mbps, and is thus suitable for high speed file transfer, video teleconferencing and pay-per-view television. Further, cable modems may simultaneously provide high speed Internet access, digital television (such as pay-per-view) and digital telephony.

Although cable modems are used in a shared access system, wherein a plurality of subscribers compete for bandwidth over a common coaxial cable, any undesirable reduction in actual data rate is easily controlled simply by limiting the number of shared users on each system. In this manner, each user is assured of a sufficient data rate to provide uninterrupted video teleconferencing or pay-per-view television, for example.

SUMMARY OF THE INVENTION

The present invention specifically addresses and alleviates the above-mentioned deficiencies associated with the prior art.

According to an aspect of the invention a modem communicates with a cable transmission system. The modem requests an amount of bandwidth on the cable system to

transmit data. The modem receives a grant of an amount of bandwidth to transmit data in response to the request. The modem compares the requested amount of bandwidth with the granted amount of bandwidth. Responsive to the comparison, the modem fragments the data to be transmitted into a plurality of segments if the requested amount is larger than the granted amount. One of the segments is no larger than the granted amount. Responsive to the grant, the modem transmits all the data to be transmitted to the cable system if the requested amount is no larger than the granted amount and transmits only the one segment to the cable system if the requested amount is larger than the granted amount.

In another aspect, the present invention includes a method for facilitating communications between a plurality of cable modems and a cable modem termination system. The method comprises transmitting a request from the cable modem to the cable modem termination system. The request is a request to transmit a data packet from the cable modem to the cable modem termination system. A time slot for transmitting the data packet from the cable modem to the cable modem termination system is allocated, optionally by the cable modem termination system. Information representative of the time slot is then transmitted, optionally by the cable modem termination system, to the cable modem. The cable modem then transmits the data packet from the cable modem to the cable modem termination system within the allocated time slot.

Transmitting the data packet from the cable modem to the cable modem termination system within the time slot mitigates collisions between data packets which are transmitted by different cable modems to the cable modem termination system at the same time and upon the same frequency channel.

In another aspect, the present invention includes an apparatus and method for synchronizing upstream communications between a plurality of cable modems and a cable modem termination system (CMTS). A first message representative of a frequency of a clock of the cable modem termination system is generated, particularly by the cable modem termination system. Similarly, a second message representative of a slot timing offset of a selected one of the cable modems with respect to the clock of the cable modem termination system is generated, again particularly by the cable modem termination system. The first and second messages are transmitted to the selected cable modem. Frequency synchronization of the clock of the selected cable modem is enhanced with respect to the cable modem termination system utilizing the first message. The slot timing offset of the clock of the cable modem with respect to the clock of the cable modem termination system is compensated for using the second message. This process is repeated, as necessary, for each cable modem which is to communicate with the cable modem termination system.

In another aspect, the present invention includes an apparatus and method for rapidly acquiring data packets in a receiver such as that of a cable modem termination system. The method generally comprises determining fractional symbol timing correction by a feedback loop process, determining carrier phase correction by a feedback loop process and determining fine amplitude by a conventional coherent estimation process.

Optionally, the amplitude of the input to the fractional symbol timing correction circuit and/or the input gain to the carrier phase correction circuit may be adjusted so as to be within the optimal operational range of the fractional symbol timing correction circuit and/or the carrier phase correction circuit via the use of phase detector gain boosting logic,

wherein a sensor senses the amplitude of the signal input to the fractional symbol timing correction circuit and/or the carrier phase correction circuit and the amplitude of the signal is then modified so as to be within the optimal range.

Optionally, timing recovery may be accelerated by utilizing two out-of-phase, e.g., 180 degree out-of-phase, sampling timing signals such that one of the two sampling timing signals will always be located sufficiently distant from a null point in a binary input sequence as to enhance timing recovery.

Another aspect of the present invention is a method for communicating modulated information from a plurality of cable modems to a cable modem termination system in a way that enhances the robustness of the upstream channels. One way is to monitor upstream channels for at least one modulation parameter which is indicative of channel quality and adjusting the modulation in response to the channel quality parameter.

Another way is to vary the symbol rate of information transmitted over a channel in a near-continuous manner by varying at least one of the upper and lower bounds.

Another way is to monitor the upstream channels and to use fine carrier frequency agility and/or variable symbol rate to facilitate dynamic channel allocation so as to communicate only within channels having quality which is above a predetermined threshold.

According to another aspect of the present invention, slot timing information and/or data-type information is transmitted from a MAC to a burst receiver so as to facilitate processing of upstream data packets by the burst receiver in an efficient and reliable manner. Channel status/error information is transmitted from the burst receiver to the MAC. The error information is used by the MAC to facilitate spectrum management which enhances the data rate and/or reliability of upstream communications.

In an aspect of the invention, noise is abated in a cable system. The cable system has a headend and a plurality of user terminals interconnected by a cable that has a single downstream transmission path from the headend to each of the user terminals and a plurality of upstream transmission paths from each of the user terminals to the headend. A notch filter at the headend is adjusted to reject one or more bands of common noise. A feedback equalizer (FBE) at the headend compensates for the distortion caused by the notch filter. Afterwards, a ranging signal is received at the headend from each user terminal and feedforward equalizer coefficients corresponding to the transmit equalizer coefficients for each user terminal are generated from the ranging signals. The feedforward equalizer (FFE) coefficients are transmitted to the respective user terminals, where they are applied to a transmit equalizer filter to compensate for individual noise at the respective user terminals.

BRIEF DESCRIPTION OF THE DRAWINGS

These and other features, aspects and advantages of the present invention will be more fully understood when considered with respect to the following detailed description, appended claims and accompanying drawings wherein:

FIG. **1** is a schematic diagram of a hybrid fiber coaxial (HFC) network showing typical pathways for data transmission between the headend (which contains the cable modem termination system) and a plurality of homes (each of which contain a cable modem);

FIG. **2** is a simplified block diagram of a cable modem system wherein a line card which defines a cable modem termination system CMTS) is disposed at the headend and a cable modem is disposed within a representative home;

FIG. **3** is a simplified block diagram showing the use of a fractional symbol timing loop, a carrier phase correction loop and a conventional amplitude estimator to enhance the rate at which acquisition of data packets is performed in a burst receiver of a cable modem termination system or the like;

FIG. **4** is a block diagram showing the interrelationships of the burst transmitter, subscriber medium access control (MAC) and receiver of the cable modem with the burst receiver, medium access control (MAC) and transmitter of the cable modem termination system;

FIG. **5**A is a schematic block diagram showing the interconnections of the burst receiver, medium access control (MAC) and transmitter downstream modulator within a cable modem termination system;

FIG. **5**B is a schematic block diagram showing the construction of the cable modem, shown in FIG. **2**, at the subscriber, such as the home;

FIG. **6**A is a block diagram showing a cable modem termination system and a representative cable modem communicating with one another via a cable plant;

FIG. **6**B is a block diagram showing the cable modem termination system and cable modem of FIG. **2** in further detail;

FIG. **6**C is a block diagram showing the cable modem termination system of FIG. **2** in further detail;

FIG. **6**D is a block diagram showing the cable modem of FIG. **3** in further detail;

FIG. **6**E is a table showing an example of loop filter coarse coefficients and fine coefficients which provide specified bandwidths at the listed update rates;

FIGS. **7**A and **7**B are block diagrams of a sub-system at the subscriber modem for receiving packets with encrypted data and control information, parsing the encrypted data from the control information, decrypting the encrypted data and separately storing the decrypted data and the control information and for restoring the packets with the encrypted data and the control information at the subscriber modem for transmission to the headend;

FIGS. **8**A and **8**B are block diagrams of a sub-system similar to that shown in FIGS. **7**A and **7**B (but at the headend) for providing a parsing of the signal packets received from the subscriber modem and a decryption of the encrypted data parsed from the packets and for providing an encryption of data for transmission to the subscriber modem and a reformulation of the packets from the encrypted data and the control information;

FIG. **9** is a block diagram in some additional detail of a burst receiver shown as a single block in FIG. **4**;

FIG. **10** is a block diagram in significantly increased detail of the burst receiver shown as a single block in FIG. **4**;

FIG. **11** is a schematic diagram illustrating the round trip transmission delay between a headend and a subscriber modem;

FIG. **12** is a flowchart showing the software level synchronization control of a cable modem;

FIG. **13** is a flowchart showing the hardware level synchronization control of a cable modem;

FIG. **14** shows a continuous data stream, such as that which may be received by a conventional continuous receiver;

FIG. **15** shows a plurality of data bursts separated by guard bands, such as those transmitted by cable modems to a cable modem termination system according to time division multiple access (TDMA);

FIG. **16** shows in further detail an exemplary data burst of FIG. **15**;

FIG. **17** shows the QPSK preamble of FIG. **16** in further detail;

FIG. **18** is a block diagram of a contemporary phase locked loop;

FIG. **19** is a block diagram of a fractional symbol timing loop in a typical digital receiver, wherein the matched filter is within the loop;

FIG. **20** is a block diagram of the fractional symbol timing loop of the present invention, wherein the matched filter has been moved outside the fractional symbol timing loop;

FIG. **21** is a block diagram showing a burst receiver having a fractional symbol timing loop, a carrier phase correction loop and an amplitude estimator so as to effect fast acquisition of data packets;

FIG. **22** is a block diagram showing a burst receiver having a fractional symbol timing loop, a carrier phase correction loop and an amplitude estimator, wherein the matched filter has been moved outside of the fractional symbol timing loop;

FIG. **23** is a block diagram of a phase detector gain boosting logic circuit wherein the amplitude of a signal input to a phase detector is monitored by a sensor and the amplitude of the signal to the low pass filter of the loop is controlled by the output of the sensor;

FIG. **24** is a timing diagram showing the use of a single contemporary clock signal to provide timing for a sampling circuit contemporary clock signal (FIG. **24**-A) to provide timing for a sampling circuit and also showing the use of two out-of-phase clock signals (FIG. **24**-B), wherein and also showing the use of two out-of-phase clock signals, wherein one of the two out-of-phase clock signals will always have a timing relationship relative to the input binary signal to effect sampling of the input binary signal.

FIG. **25**A is a schematic block diagram of a system for allocating different portions of a dynamic range of power between analog and digital states in the system.

FIG. **25**B is a schematic block diagram of an RMS estimator that is used to derive a variable gain amplifier setting.

FIG. **26** is a block diagram of a prior art technique showing a plurality of contemporary demodulators coupled to demodulate data which is input from a transmission medium such as a fiber optic or coaxial cable and which is coupled to provide the demodulated data as an output thereof;

FIG. **27** is a block diagram of one aspect of the present invention, showing a monitoring circuit coupled to monitor a plurality of upstream channels for at least one parameter which is indicative of channel quality;

FIG. **28** is a block diagram of a prior art upstream burst receiver and medium access control (MAC) showing modulated data input from a transmission medium, such as a coaxial cable, to the upstream burst receiver and showing digital data output from the MAC;

FIG. **29** is a block diagram showing an aspect of the present invention;

FIG. **30** is a chart showing RS coding gain for various T's using 16-QAM with K equals 64 bytes;

FIG. **31** is a schematic drawing providing an example of fine frequency agility, wherein the frequency spectrum is divided into a plurality of closely spaced channels;

FIG. **32** is a flowchart showing dynamic channel allocation control flow;

FIG. **33** is a flowchart showing CMTS dynamic channel allocation control flow;

FIG. **34** is a simplified block diagram showing the MAC/PHY interface of the present invention;

FIG. **35** is a schematic representation of a data packet showing the positioning of the data or payload therein and also showing the location of a guard band;

FIG. **36** is a schematic diagram showing the formation of an exemplary MAP which is transmitted by the cable modem termination system (CMTS) to all of the cable modems on a particular channel so as to facilitate communication of the cable modems with the cable modem termination system according to a time division multiple access (TDMA) protocol which avoids collisions among data packets from different cable modems;

FIG. **37** is a schematic diagram showing the formation of frames by a cable modem in response to receipt of a MAP, such as that shown in FIG. **36**;

FIG. **38** is a flowchart showing the operation of the cable modem termination system in separating high priority requests and low priority requests received from cable modems;

FIGS. **39** and **40**, taken together, define a flowchart showing the operation of the cable modem termination system in granting requests from cable modems to transmit data from the cable modems to the cable modem termination system;

FIGS. **41** and **42**, taken together, define a block diagram of that portion of the cable modem termination system which receives requests from the cable modems and which generates MAPs in response to these requests and also shows a plurality of cable modems which receive the MAPs and which generate frames in accordance with the MAPs;

FIG. **43** is a graphical representation of the relationship of the minislots which define the request interval, maintenance interval and data interval with respect to the minislot clock (MSCLK);

FIG. **44** is a graphical representation of the MAP message format prior to message filtering;

FIG. **45** is a graphical representation of the MAP message format after message filtering;

FIG. **46** is a block diagram showing the architecture of the shared SRAM-based MAC interface for eight upstream channels;

FIG. **47** is a block diagram showing the MAP timing control interface signals which are transmitted from the MAP to the demodulator of the burst receiver;

FIG. **48** is a graphical representation of the relationship between the minislots which define the request interval, the maintenance interval and the data interval with respect to the minislot clock, MapValid signal and MapData and also showing the MAP clock;

FIG. **49** is a graphical representation of the relationship between the minislots which define the maintenance interval, the minislot clock, the MapValid signal and MapData and also showing the timing of the receive now (Rx now) signal;

FIG. **50** is a graphical representation of the relationship between the minislots which define the data interval, the minislot clock, the MapValid signal and MapData and also showing the timing of the receive now (Rx now) signal;

FIG. **51** is a graphical representation of the relationship between the minislots which define the request interval, the minislot clock, the MapValid signal and MapData and also showing the timing of the receive now (Rx now) signals;

FIG. **52** is a graphical representation showing the prepended information when the first block TDMA transmission bit is set;

FIG. **53** is a graphical representation showing the prepended information when the equalizer prepend bit is set, thereby increasing the prepended information by 32 bytes (for a total length of 48 bytes) with respect to FIG. **52**;

FIG. **54** is a table showing the statistics and the calculation used for each slot definition;

FIG. **55** is a block diagram of the MAC/PHY interface;

FIG. **56** is a graphical representation showing the relationship of the bit clock with respect to the burst valid indicator (BlkDV) and the data;

FIG. **57** is a graphical representation showing the MAP serial interface field definitions;

FIG. **58** is a graphical representation showing the format of the prepended data;

FIG. **59** shows the signaling for the data/control MAC/PHY interface at the subscriber cable modem;

FIG. **60** is a block diagram showing the sign-on sequence for the cable modem initialization process;

FIG. **61** is a block diagram showing the relationship of the cable modem to the cable modem termination system;

FIG. **62** is a graphical representation showing the contents of the prepended information;

FIG. **63** is a table showing the definitions of the bit fields for the status bytes in the prepended information;

FIG. **64** is a block diagram showing the burst demodulator status information processing flow;

FIG. **65** is a block diagram showing the burst detector SPI bus interface;

FIG. **66** is a timing diagram showing one mode of the generic byte base serial input with control information prepended;

FIG. **67** is a timing chart showing another mode the generic byte base serial input with control information prepended;

FIG. **68** is a schematic diagram showing the fragmentation of a data packet of a cable modem into first and second portions thereof, wherein the first portion of the data packet is placed in a first time slot allocated by the cable modem termination system and the second portion of the data packet is placed in a second time slot allocated by the cable modem termination system;

FIG. **69** is a schematic diagram of a complete packet according to the present invention, which is used to transmit data from a cable modem to a cable modem termination system;

FIG. **70** is a schematic diagram of a plurality of complete packets according to the present invention, used to transmit data on a concatenated basis from a cable modem to the cable modem termination system;

FIG. **71** is a schematic diagram of a plurality of packet fragments transmitted from a cable modem to the cable modem termination system, wherein the packet fragments form, in composite, a complete packet;

FIG. **72** shows the format of one of the packets of FIG. **71** in further detail;

FIGS. **73** and FIG. **74**, taken together, define a table providing further detail of the fragmentation format of a frame which incorporates a packet;

FIGS. **75** and **76**, taken together, define a flowchart showing how a cable modem and a cable modem termination system cooperate to facilitate the fragmentation of packets by the cable modem for transmission to the cable modem termination system;

FIG. **77** is a flowchart illustrating the fragmentation process;

FIG. **78** is a modification of FIG. **1** adapting the invention to wireless transmission;

FIG. **79** is a modification of FIG. **2** adapting the invention to wireless transmission;

FIG. **80** is a schematic diagram of a single integrated circuit chip adapted to practice the invention;

FIG. **81** is a schematic block diagram of a bidirectional cable transmission system;

FIG. **82** is a schematic block diagram of a portion of the RF receiver at the headend of the cable system shown in FIG. **81**;

FIG. **83** is a schematic block diagram of the adaptive notch filter shown in FIG. **82**;

FIG. **84** is a schematic block diagram of the generalized decision feedback equalizer (DFE) shown in FIG. **82**;

FIG. **85** is a schematic block diagram of a portion of one of the cable modems shown in FIG. **81**;

FIG. **86** is a diagram of the TDMA slots for transmitting information in an upstream channel of the cable system shown in FIG. **81**;

FIG. **87** is a block diagram of a method for reducing noise in the cable system shown in FIG. **81**;

FIGS. **88**A–**88**C are frequency response diagrams illustrating common noise (such as ingress) cancellation according to the method shown in FIG. **87**;

FIGS. **89**A and **89**B are diagrams of a 16-QAM constellation before and after noise cancellation according to the method shown FIG. **87**; and

FIGS. **90**A and **90**B are frequency response diagrams illustrating both ingress and individual noise compensation according to the method shown in FIG. **87**.

DETAILED DESCRIPTION OF THE INVENTION

Introduction

In a cable modem system, a headend or cable modem termination system (CMTS) is located at a cable company facility and functions as a modem which services a large number of subscribers. Each subscriber has a cable modem (CM). Thus, the cable modem termination system must be capable of facilitating bidirectional communication with any desired one of the plurality of cable modems.

As used herein, the cable modem termination system (CMTS) is defined to include that portion of a headend which facilitates communication with a plurality of cable modems. A typical cable modem termination system includes a burst receiver, a continuous transmitter and a medium access control (MAC).

The cable modem termination system communicates with the plurality of cable modems via a hybrid fiber coaxial (HFC) network, wherein optical fiber provides communication to a plurality of fiber nodes and each fiber node typically serves approximately 500 to 2,000 subscribers, which communicate with the node via coaxial cable. A plurality of subscribers communicate with the fiber node via a common or shared coaxial cable. It is this sharing of the common coaxial cable which necessitates that the number of cable modems attached thereto be limited so as to mitigate the likelihood of undesirable bit rate reductions which inherently occur when an excessive number of cable modems communicate simultaneously over a single coaxial cable.

The hybrid fiber coaxial network of a cable modem system utilizes a point-to-multipoint topology to facilitate communication between the cable modem termination system and the plurality of cable modems. Frequency domain multiple access (FDMA)/time division multiplexing (TDM) is used to facilitate communication from the cable modem

termination system to each of the cable modems, i.e., in the downstream direction. Frequency domain multiple access (FDMA)/time domain multiple access (TDMA) is used to facilitate communication from each cable modem to the cable modem termination system, i.e., in the upstream direction.

The cable modem termination system includes a downstream modulator for facilitating the transmission of data communications therefrom to the cable modems and an upstream demodulator for facilitating the reception of data communications from the cable modems.

The downstream modulator of the cable modem termination system utilizes either 64 QAM or 256 QAM in a frequency band of 54 MHz to 860 MHz to provide a data rate of up to 56 Mbps.

Since the upstream channel has a much lower data rate requirement, the upstream demodulator uses either QPSK or 16 QAM in a frequency range of 5 MHz to 42 MHz to provide a data rate of up to 10 Mbps.

The asymmetric data throughput defined by the upstream channel requiring a much lower data rate than the downstream channel results from the inherently larger amount of data which is communicated via the downstream channel during pay-per-view, Internet access and the like, wherein a video signal is communicated via the downstream channel, while only control signals such as those associated with viewing of the video signal are communicated via the upstream channel. Thus, the downstream channel requirement may exceed 1.5 Mbps, while the upstream channel requirement may be as low as 16 Kbps.

Similarly, each cable modem includes an upstream modulator for facilitating the transmission of data to the cable modem termination system and a downstream demodulator for receiving data from the cable modem termination system. The upstream modulator of each cable modem uses either QPSK or 16 QAM within the 5 MHz to 42 MHz bandwidth of the upstream demodulator and the downstream demodulator of each cable modem utilizes either 64 QAM or 256 QAM in the 54 MHz to 860 MHz bandwidth of the downstream modulator (in North America).

Contemporary cable modem systems operate on a plurality of upstream channels and utilize time division multiple access (TDMA) in order to facilitate communication between a plurality of cable modems and a single cable modem termination system on each upstream channel. Typically, between 250 and 500 cable modems communicate with a single cable modem termination system on a given upstream channel.

In order to accomplish TDMA for upstream communication, it is necessary to assign time slots within which cable modems having a message to send to the cable modem termination system are allowed to transmit. The assignment of such time slots is accomplished by providing a request contention area in the upstream data path within which the cable modems are permitted to contend in order to place a message which requests additional time in the upstream data path for the transmission of their message. The cable modem termination system responds to these requests by assigning time slots to the cable modems making such a request, so that as many of the cable modems as possible may transmit their messages to the cable modem termination system utilizing TDMA and so that the transmissions are performed without undesirable collisions.

Because of the use of TDMA, the cable modem termination system must use a burst receiver, rather than a continuous receiver, to receive data packets from cable modems via upstream communications. As those skilled in the art will appreciate, a continuous receiver can only be utilized where generally continuous communications (as opposed to burst communications as in the present invention) are performed, so as to substantially maintain timing synchronization between the transmitter and the receiver, as is necessary for proper reception of the communicated information. During continuous communications, timing recovery is a more straightforward process since signal acquisition generally only occurs at the initiation of such communications. Thus, acquisition is generally only performed in continuous receivers once per continuous transmission and each continuous transmission may be very long.

However, the burst communications inherent to TDMA systems require periodic and frequent reacquisition of the signal. That is, during TDMA communications, the signal must be reacquired for each separate burst transmission being received.

Since continuous receivers generally only acquire the signal once, the need to minimize acquisition time is much less critical in continuous receivers than in burst receivers, wherein acquisition must be performed for each separate burst, and therefore occurs quite frequently. Thus, there is a strong motivation to minimize acquisition time in burst receivers, so as to enhance overall data transmission efficiency and throughput. As such, it is beneficial to provide techniques which enhance the speed at which data packets transmitted according to TDMA methodologies may be acquired by a burst receiver, such as that of a cable modem termination system.

Burst Receiver for Cable Modem System and Synchronization

Referring now to FIG. **1**, a hybrid fiber coaxial (HFC) network **1010** facilitates the transmission of data between a headend **1012**, which includes at least one cable modem termination system, and a plurality of homes **1014**, each of which contains a cable modem. Such hybrid fiber coaxial networks are commonly utilized by cable providers to provide Internet access, cable television, pay-per-view and the like to subscribers.

Approximately 500 homes **1014** are in electrical communication with each node **1016**, **1034** of the hybrid fiber coaxial network **1010**, typically via coaxial cables **1029**, **1030**, **1031**. Amplifiers **1015** facilitate the electrical connection of the more distant homes **1014** to the nodes **1016**, **1034** by boosting the electrical signals so as to desirably enhance the signal-to-noise ratio of such communications and by then transmitting the electrical signals over coaxial cables **1030**. **1031**. Coaxial cable **1029** electrically interconnects the homes **1014** with the coaxial cables **1030**, **1031**, which extend between amplifiers **1015** and nodes **1016**, **1034**.

Each node **1016**, **1034** is electrically connected to a hub **1022**, **1024**, typically via an optical fiber **1028**, **1032**. The hubs **1022**, **1024** are in communication with the headend **1012**, via optical fibers **1020**, **1026**. Each hub is typically capable of facilitating communication with approximately 20,000 homes **1014**.

The optical fibers **1020**, **1026** extending intermediate the headend **1012** and each hub **1022**, **1024** defines a fiber ring which is typically capable of facilitating communication between approximately 100,000 homes **1014** and the headend **1012**.

The headend **1012** may include video servers, satellite receivers, video modulators, telephone switches and/or Internet routers **1018**, as well as the cable modem termination system. The headend **1012** communicates via transmis-

sion line **1013**, which may be a T1 or T2 line, with the Internet, other headends and/or any other desired device(s) or network.

Referring now to FIG. **2**, a simplified block diagram shows the interconnection of the headend **1012** and an exemplary home **1014**, wherein a cable modem **12** communicates with a cable modem termination system, embodied as a line card **1042**, via hybrid fiber coaxial network **1010**.

More particularly, a personal computer **1048**, disposed within the home **1014**, is connected via cable **1011** to the cable modem **12** which communicates via coaxial cable **1017** with the hybrid fiber coaxial network **1010**, which in turn communicates via optical fiber **1020** with the cable modem termination system (CMTS) including line card **1042** of the headend **1012**. Internet router **1040** facilitates communication between the headend **1012** and the Internet or any other desired device or network.

Referring now to FIG. **3**, the present invention includes a cable modem termination system (defined by line card **1042** of FIG. **2**) which communicates with a plurality of cable modems **12**. Cable modem termination system (CMTS) **10** has an enhanced data packet acquisition burst receiver **580**. Burst receiver **580** includes an analog front-end such as an analog-to-digital converter **582** which receives analog data packets from an upstream channel and which converts the analog data packets into digital data packets, a fractional symbol timing loop **584** which determines a fractional symbol timing correction and applies the fractional symbol timing correction to the data packets, a carrier phase correction loop **586** which determines a carrier phase correction and applies the carrier phase correction to the data packets, a phase derotator **588** which corrects phase errors in the symbols of the data packets, and a conventional coherent amplitude estimator **590** which provides an amplitude correction by a conventional estimation process and applies the amplitude correction to the data packets via multiplier **592** prior to the data packets being provided to slicer **594**. This process is described in detail below.

The timestamp generation at the CMTS and the upstream timing recovery logic at the CM, and the flow of timestamp message are shown in FIG. **6**A. Although only one cable modem **12** is shown in FIG. **6**A for clarity, the cable modem termination system **10** actually communicates bidirectionally with a plurality of such cable modems **12**. Such communication as discussed herein may actually occur between the cable modem system and the plurality of cable modems by communicating simultaneously with the cable modems on a plurality of separate frequency channels.

This aspect of the invention primarily addresses communication of a plurality of different cable modems on a single frequency channel in a serial or time division multiplexing fashion, wherein the plurality of cable modems communicate with the cable modem termination system sequentially. However, it will be appreciated that while this plurality of cable modems is communicating on one channel with the cable modem termination system (using time division multiple access or TDMA), many other cable modems may be simultaneously communicating with the same cable modem termination system on a plurality of different channels (using frequency division multiplexing/time division multiple access or FDM/TDMA)

In a typical cable modem system, a single cable modem termination system including line card **1042** (FIG. **2**) will typically communicate with between 250 and 500 cable modems **12**. Thus, the cable modem system of the present invention includes a plurality of cable modems **12**. Although the following description generally discusses the operation of a single cable modem termination system including line card **1042** and a single cable modem **12**, those skilled in the art will appreciate that a plurality of cable modem termination systems including line cards **1042** and cable modems **12** may similarly be utilized.

The cable modem termination system **10** communicates with each of the cable modems **12** via a cable plant **8**, which typically includes a hybrid fiber coaxial (HFC) network in which optical fiber facilitates communication from the cable modem termination system **10** to a plurality of hubs, each of which distribute signals from the optical fiber to a plurality of coaxial cables. Each hub may be located at a distance of up to approximately 100 miles from either the cable modem termination system **10** or from the next hub along the optical fiber.

Optionally, a plurality of cable modem termination systems may be synchronized with respect to one another so as to facilitate communication between any desired cable modem termination system and any desired cable modem(s).

According to one aspect of the present invention, the cable modem termination system **10** includes a crystal oscillator timing reference **16** which provides an output to a linear counting sequence generator **21**. It is this timing reference **16** to which each of the cable modems **12** must be synchronized. The linear counting sequence generator **21** is incremented by the output of the crystal oscillator timing reference **16** and maintains a count representative of the number of cycles provided by the crystal oscillator timing reference **16** since the linear counting sequence generator **21** was last reset. According to the present invention, the linear counting sequence generator **21** includes a free-running counter having a sufficient count capacity to count for several minutes before resetting.

A timebase message (timebase message and timestamp message are used interchangeably herein) generator **20** receives the count of the linear counting sequence generator **21** to provide an absolute time reference which is inserted into the downstream information flow **23** provided by downstream data queue **24**, as discussed in detail below. The timebase message generator **20** performs a modulo function, i.e., a sawtooth pattern as a function of time, and the counter clock is generated by the oscillator with very tight accuracy.

Slot timing offset generator **26** receives a timing offset (ranging signal) message **27** from each individual cable modem **12** with which the cable modem termination system is in communication. The slot timing offset generator **26** provides a slot timing offset **28** which is representative of a slot timing offset between the cable modem termination system **10** and the cable modem **12** and inserts the slot timing offset **28** into the downstream information flow **23**. The slot timing offset **28** is calculated by determining the position of the slot timing offset from the expected time of message **27** within a dedicated timing slot of the upstream communications, as discussed in detail below. The timing offset generator **26** encodes the timing offset (ranging error) detected by the upstream receiver into a slot timing offset message.

Slot timing offset messages are sent only after the frequency of the local reference clock has been acquired by the cable modem.

Downstream modulator **30** primarily modulates the downstream information flow **23**. Absolute time references are inserted at quasi-periodic intervals as determined by a timestamp send timer in the form of a binary up counter **31** (FIG. **6**C). A slot timing offset **28** is inserted shortly after the arrival of a slot timing offset message **27**.

The time line **32** of the cable modem termination system **10** shows that the slot timing offset **28** is the difference between the expected receive time and the actual receive time of the slot timing offset message **27**.

According to one embodiment of the present invention, each cable modem **12** includes a downstream receiver **15** for facilitating demodulation of the data and timestamp message, and timing recovery of downstream communications from the cable modem termination system **10**. The output of the downstream receiver **15** is provided to timebase message detector **36** and slot timing offset detector **38**. The downstream information (any data communication, such as a file transfer or MPEG video signal) received by the downstream receiver **15** is also available for further processing, as desired.

The timebase message detector **36** detects the timebase message generated by timebase message generator **20** of the cable modem termination system **10**. Similarly, the slot timing offset detector **38** detects the slot timing offset **28** generated by the slot timing offset generator **26** of the cable modem termination system **10**. The timebase message detector **36** provides an absolute time reference which is representative of the frequency of the crystal oscillator timing reference **16** of the cable modem termination system **10**. The absolute time reference is provided to a digital tracking loop **42** which provides a substantially stable clock output for the cable modem **12** which corresponds closely in frequency to the frequency of the crystal oscillator timing reference **16** of the cable modem termination system **10**. Thus, the digital tracking loop **42** uses the absolute time reference, which is representative of the frequency of the crystal oscillator timing reference **16**, to form an oscillator drive signal which drives a numerically controlled oscillator **44** in a manner which closely matches the frequency of the crystal oscillator timing reference **16** of the cable modem termination system **10**, as discussed in detail below.

A difference between the absolute time reference and the output of a local time reference **46**, which is derived from the numerically controlled oscillator **44**, is formed by a differencer **48**. This difference defines a frequency error value which represents the difference between the clock of the cable modem **12** (which is provided by local time reference **46**) and the clock of the cable modem termination system **10** (which is provided by crystal oscillator timing reference **16**).

This frequency error value is filtered by loop averaging filter **50** which prevents undesirable deviations in the frequency error value from affecting the numerically controlled oscillator **44** in a manner which would decrease the stability thereof or cause the numerically controlled oscillator **44** to operate at other than the desired frequency. The loop filter **50** is configured so as to facilitate the rapid acquisition of the frequency error value, despite the frequency error value being large, and then to reject comparatively large frequency error values as the digital tracking loop **42** converges, i.e., as the output of the local timing reference **46** becomes nearly equal to the absolute time reference, thereby causing the frequency error value to approach zero.

According to one embodiment of the present invention, an initial slot timing offset **52** is added by summer **61** to the output of the local time reference **46** to provide a partially slot timing offset corrected output **56**. The partially slot timing offset corrected output **56** of summer **61** is then added to slot timing offset **58** provided by slot timing offset detector **38** to provide slot timing offset and frequency corrected time reference **86**. The timing offset correction is a simple addition which adds two message values. Such simplified operation is facilitated only when the resolution of the timing offset message is equal to or finer than that of the timestamp message.

The initial slot timing offset **52** is merely an approximation of the expected slot timing offset likely to occur due to the propagation and processing delays, whose approximate values have been predetermined. After frequency conversion using the phase locked loop and timebase message error, the slot timing offset **58** provides a final correction which is calculated by the cable modem termination system **10** in response to the cable modem termination system **10** receiving communications from the cable modem **12** which are not properly centered within their desired timing slots, as discussed in detail below.

Scaler **87** scales the frequency corrected time reference **86** so as to drive upstream transmitter **69** at the desired slot timing.

Time reference **88** is compared to the designated transmit time **89** which was allocated via downstream communication from the cable modem termination system **10** to the cable modem **12**. When the time reference **88** is equal 67 to the designated transmit time, then an initiate burst command **65** is issued and the upstream data queue **71** is modulated to form upstream transmission **75**.

The timing offset (error) message is generated by the cable modem termination system. The timing offset (error) is simply the difference between the expected time and the actual arrival time of the message during the ranging slot at the cable modem termination system receiver.

Referring now to FIG. **6**B, the cable modem termination system **10** and the cable modem **12** are described in further detail. The multiplexer **29** of the cable modem termination system **10** combines downstream information flow **23** with slot timing offset message **28** from slot timing offset generator **26** and with an absolute time reference from timebase message generator **20** to provide downstream communications to the downstream transmitter, which includes downstream modulator **30** (FIG. **6**A).

The slot timing offset generator **26** receives a slot timing offset signal **77** from the upstream receiver **13**. The location of the slot timing offset signal within a time slot of an upstream communication defines the need, if any, to perform a slot timing offset correction. Generally, a slot timing offset value will be transmitted, even if the actual slot timing offset is 0. When the slot timing offset signal is desirably located within the time slot, and does not extend into guard bands which are located at either end of the time slot, then no slot timing offset correction is necessary.

However, when the slot timing offset signal extends into one of the guard bands of the time slot of the upstream communication, then a slot timing offset message **28** is generated by the slot timing offset generator **26**, which is transmitted downstream to the cable modem **12** where the slot timing offset message **28** effects a desired correction to the time at which upstream communications occur, so as to cause the slot timing offset signal and other transmitted data to be positioned properly within their upstream time slots.

The headend tick clock **25** includes the crystal reference **16** of FIG. **6**A and provides a clock signal to linear counting sequence generator **21**. Slot/frame time generator **19** uses a clock signal provided by count sequence generator **21** to provide both a minislot clock **19***a* and a receive now signal **19***b*. The absolute time reference from generator **20** is the clock by which the message slots are synchronized to effect time division multiple access (TDMA) communications from each cable modem **12** to the cable modem termination system **10**. At the CM, a Transmit now signal is generated at

the beginning of each minislot of a transmission (FIG. **61**). At the CMTS, a Receive now signal is similarly generated at the beginning of a received packet (FIGS. **49**–**51**).

A minislot is a basic medium access control (MAC) timing unit which is utilized for allocation and granting of time division multiple access (TDMA) slots. Each minislot may, for example, be derived from the medium access control clock, such that the minislot begins and ends upon a rising edge of the medium access control clock. Generally, a plurality of upstream symbols define a minislot and a plurality of minislots define a time division multiple access slot.

The cable modem **12** receives downstream data from the downstream channel **8**B. A timebase message detector **36** detects the presence of a timebase message in the downstream data.

Slot timing offset correction **47** is applied to data transmitted on upstream channel **8**A prior to transmission thereof from the subscriber cable modem **12**. The slot timing offset correction is merely the difference between the actual slot timing offset and the desired slot timing offset. Thus, the slot timing offset correction is generated merely by subtracting the actual slot timing offset from the desired offset. Slot/frame timing generator **63** controls transmission of the upstream data queue **71** (FIG. **6**A) at the designated transmit time **89** (FIG. **6**A).

Summer **48** subtracts the local time reference **46** from the timebase message and provides an output to a loop filter **50** which drives numerically controlled oscillator **44**, as discussed in detail below.

Upstream transmitter **11** facilitates the transmission of upstream channels **8**A from the subscriber cable modem **12** and upstream receiver **13** facilitates the reception of the upstream channels **8**A by the cable modem termination system **10**.

Downstream transmitter **17** facilitates the transmission of downstream channels **8**B from the cable modem termination system **10** to the cable modem **12** where downstream receiver **15** facilitates reception thereof.

Referring now to FIG. **6**C, the cable modem termination system **10** is shown in further detail.

As discussed above, the crystal oscillator timing reference **16** provides an output to linear counting sequence generator **21** which increments to provide a count representative of the frequency of the crystal oscillator timing reference **16**. The counter **21** also provides a substantially jitterless headend reference which provides a clock signal for downstream data transmissions from the cable modem termination system **10**. The jitterless headend reference is synchronized to the downstream symbol rate via synchronizer **37** which includes counters **412**, **413**, **414**, inverter **93** and AND gate **94** which cooperate according to well-known principles to provide a timestamp latch enable to AND gate **39** to enable latch **41**.

The linear counting sequence generator **21** provides its count to latch **41**. Latch **41** provides the count from the linear counting sequence generator **21** to multiplexer **45** when an enable is provided to latch **41**. The enable is provided to latch **41** when the synchronizer **37** provides a high output and the downstream processor **718** provides a low output to AND gate **39**. The count from the linear counting sequence generator **21** is combined with a timebase message header **43** by multiplexer **45** and the combined count and timebase message header is provided to the downstream processor **718**. The downstream processor **718** provides a control signal to the multiplexer **45** to cause the multiplexer **45** to provide the count from the linear counting sequence generator **21** and the timebase message header **43** to the downstream processor **718** only when the downstream processor **718** is ready to insert the count and the timebase message header **43** into a downstream data communication.

Binary up counter **31** functions as a timestamp send timer so as to cause the count or absolute time reference (FIG. **6**A) from the linear counting sequence generator **21** to be inserted into a downstream communication in a generally periodic fashion. The binary up counter **31** receives a count from the linear counting sequence generator **21**. When the count of the binary up counter **31** equals a value stored in the threshold register **33**, equality comparitor **35** provides a request timestamp send to the downstream processor **718**. It is important to note that the timestamp includes the absolute time reference (FIG. **6**A).

However, the downstream processor **718** does not immediately insert every combined count and timebase message header from multiplexer **45** into a downstream communication when the request timestamp send **59** is provided by the equality comparitor **35** to the downstream processor **718**. Rather, the downstream processor **718** waits until any downstream message presently being transmitted is finished so as to prevent undesirable fragmentation thereof.

The downstream processor **718** provides downstream data, including downstream communications from the downstream data queue **24**, a count from the linear counting sequence generator **21**, and a timebase message header **43** from multiplexer **45** to the downstream modulator **51**, which modulates the data, count, and timebase message header to form a downstream data communication **53** which includes a plurality of individual messages **55**. Some of these individual messages **55** includes communicated data such as file transfers and MPEG video and some of these messages **55** include timestamps and/or slot timing offsets to facilitate synchronization of a selected cable modem **12** with the cable modem termination system **10**.

In this manner, a count which is representative of the frequency of the crystal oscillator timing reference **16** is transmitted from the cable modem termination system **10** to each cable modem **12**.

The output of the linear counting sequence generator **21** is divided down to provide a frequency reduced slow tick clock output signal.

Referring now to FIG. **6**D, an exemplary timing recovery circuit of a cable modem is shown in further detail. Downstream demodulator **95**, which forms a portion of downstream receiver **15** of FIG. **6**B, provides clock and data signals which are derived from downstream channels **8**B (FIG. **6**A). The data signals include downstream bytes which in turn include the count or timestamp **97** and timebase message header **81** transmitted by the cable modem termination system **10**. Slot timing offset messages are included in the downstream flow of downstream data.

Timestamp detector **80** detects the presence of a timestamp header **81** among the downstream bytes and provides a timestamp arrived signal **82** which functions as a downstream byte clock sync. The timestamp arrived signal **82** is provided to synchronizer **83** which includes register **101**, register **102**, AND gate **103**, inverter **104** and latch **105**, which stretches the input and generates a tick clock synch pulse **107**. Synchronizer **83** synchronizes the timestamp arrived signal **82** to the clock of the cable modem **12**, to provide a data path enable tick clock sync pulse **107** for enabling the digital tracking loop **42**.

When the digital tracking loop **42** is enabled by the pulse **107** from the synchronizer **83** in response to detecting a timestamp header by timestamp detector **80**, then the timestamp, which is a count provided by the linear counting

sequence generator **21** of FIG. **6**C, is provided to the digital tracking loop **42** and the digital tracking loop **42** is enabled so as to process the timestamp.

A differencing circuit or saturating frequency detector **109** compares the timestamp to a count provided to the saturating frequency detector **109** by timebase counter **111** which is representative of the frequency of numerically controlled oscillator **44**. The saturating frequency detector **109** provides a difference signal or frequency error value **112** which is proportional to the difference between the frequency of the numerically controlled oscillator **44** of the cable modem and the crystal oscillator reference **16** of the cable modem termination system.

If the difference between the timestamp and the value of the timebase counter **111** is too large, then the difference is saturated to a maximum or minimum level depending on the sense of the excessive difference.

Detector **109** is coupled by a zero or pass connection **113** to latch **115**. Responsive to a loop enable signal, the difference provided by the detector **109** is provided to latch **115** when a global enable is provided thereto. The loop enable is set active when functioning of the digital tracking loop is desired.

Latch **115** provides the frequency error value **112** to a loop filter which includes multipliers **117** and **119**, scalers **121** and **123**, summers **124**, **125** and latch **127**.

The multipliers **117** and **119** include shift registers which effect multiplication by shifting a desired number of bits in either direction. Scalers **121** and **123** operate in a similar manner. The loop filter functions according to well-known principles to filter out undesirable frequency error values, such that they do not adversely affect the stability or operation of numerically controlled oscillator **44**. Thus, the loop filter tends to smooth out undesirable deviations in the frequency error value signal, so as to provide a more stable drive signal for the numerically controlled oscillator **44**.

According to one embodiment of the present invention, the multipliers **117** and **119** can be loaded with different coefficients such that the bandwidth of the loop filter may be changed from a larger bandwidth during initial acquisition to a smaller bandwidth during operation. The larger bandwidth used initially facilitates fast acquisition by allowing frequency error values having larger deviations to be accepted. As the digital tracking loop **42** converges, the frequency error value tends to become smaller. At this time, frequency error values having larger deviations would tend to decrease stability of the digital tracking loop **42** and are thus undesirable. Therefore, different coefficients, which decrease the bandwidth of the loop filter, are utilized so as to maintain stability of the digital tracking loop **42**.

A table showing an example of coarse and fine coefficients K**0** and K**1** which are suitable for various different update rates and bandwidths are shown in FIG. **6**E.

The output of the loop filter is provided to latch **129**. The output of latch **129** is added to a nominal frequency by summer **133** so as to define a drive signal for numerically controlled oscillator **44**.

Those skilled in the art will appreciate that the addition of a frequency offset, if properly programmed to a normal frequency, will decrease the loop's acquisition time. This is due to the fact that the final value of the accumulated value of latch **127** will be closer to its initial value.

The nominal frequency is generally selected such that it is close in value to the desired output of the numerically controlled oscillator **44**. Thus, when the numerically controlled oscillator **44** is operating at the desired frequency, the filtered frequency error value provided by latch **129** is nominally zero.

Referring now to FIG. **12**, a flowchart showing the two levels of control, i.e., coarse lock and fine lock, of the digital tracking loop **42** is provided. As mentioned above, the coarse lock utilizes coefficients for the multipliers **117** and **119** which provide a large bandwidth of the loop filter which is suitable for the acquisition of the frequency error value so as to initiate tracking, while the fine coefficients provide enhanced stability of the numerically controlled oscillator **44**, so as to prevent undesirable fluctuations in the output thereof. According to one exemplary embodiment of the present invention, a hardware control level, i.e., utilizing coarse coefficients for the multipliers **117** and **119**, achieves a coarse frequency lock and then a software level changes the loop coefficients to achieve a final, low jitter frequency lock. At the hardware level, a state of frequency lock implies that the difference between arriving timebase message values and the clock, i.e., output of the numerically controlled oscillator **44**, of the cable modem **12** is below a predetermined or programmable error threshold. Software lock implies that a final low jitter lock state has been achieved.

The process for achieving coarse frequency lock or (sync=1) is now described. After starting **200**, the cable modem **12** first waits **201** for the loop or data path enable **107** (FIG. **6**D) before becoming active. After the first timebase message arrives, then the first timebase message **202** is loaded **203** into the timebase counter **111** (FIG. **6**D) of the digital tracking loop **42**. This allows the digital tracking loop **42** to be initiated with a value which produces a zero frequency error value, so as to facilitate faster acquisition and prevent undesirable swings in the output of the numerically controlled oscillator **44**. Thus, when the data path enable **107** is detected by the digital tracking loop **42**, then the next arriving timestamp is loaded into the timebase counter of the cable modem **12** and the digital tracking loop **42** then waits **204** for the next timebase message to arrive.

Loading **203** of the initial timebase message into the timebase counter **111** enhances acquisition time because it forces the counter **111** of the cable modem **12** to have a value close to that of the linear counting sequence generator **21** of the cable modem termination system **10**. When the next timebase message arrives **204**, the number of messages that have arrived thus far are compared **205** to a programmable threshold. If the number of messages (acquisition count) is less than the programmable threshold (acquisition threshold), then the acquisition count is incremented **206**. If the number of messages received so far (acquisition count) is greater than the programmable threshold (acquisition threshold), then the current timebase error is checked **207** against an error threshold to determine whether or not sync can be declared (sync=1). If the timebase error is below the threshold, then hardware coarse lock has been achieved and sync becomes active. The cable modem **12** then waits for the next timebase message to arrive. If the new timebase error exceeds the error threshold, then the cable modem **12** returns to the initial or start state **200**, resets the acquisition count and the loop integrator value, i.e., the value stored in latch **127**, and the acquisition process begins again.

Referring now to FIG. **13**, the software level of control occurs within a local processor and affects the digital tracking loop **42** via register writes to the loop filter's linear and integrator coefficients. The loop filter's linear coefficient is that coefficient placed in multiplier **117** and the loop filter's integrator coefficient is that coefficient placed in multiplier

119. Loading different sets of coefficients into a loop filter changes the loop filter's bandwidth, as discussed above.

Thus, coarse coefficients give the digital tracking loop **42** a relatively large bandwidth, which enables quick acquisition of frequency error values, while narrower loop bandwidths reject frequency error values representative of noisier variations in the error metric, thereby smoothing the digital tracking loop's **42** response. It is important to note that smooth response of the digital tracking loop **42** is important in achieving low jitter between the cable modem **12** and the cable modem termination system **10**.

According to the present invention, before enabling the hardware acquisition control, the first stage of software acquisition control includes estimation **300** of the timestamp interarrival time, which is particularly estimated by averaging the timestamp interarrival time over a plurality, e.g., 10 to 50 arrivals. This estimation is important because the coarse and fine coefficients are obtained from the table shown in FIG. **6**E, where they are dependent upon the update rate, i.e., timestamp interarrival time.

After interarrival time is estimated as represented by a block **300**, then the software controller enters an initialization state as represented by a block **301** wherein a trial counter (which counts the number of acquisition attempts thus far) is reset, the tracking loop **42** is disabled and the latch **127** of the loop integrator is reset.

Next, the trial counter is incremented and checked as represented by a block **303** to see if the number of acquisition attempts is less then a predetermined threshold. If the threshold is exceeded, then the controller takes a NO path back to block **300** and performs interarrival estimation again. Otherwise, the controller takes a YES path and the coarse coefficients are loaded as represented by a block **305** into the multipliers **117** and **119** of the digital tracking loop **42** and the loop is enabled. The software controller then waits as represented by a block **307** for the same number of timestamps to arrive as does the hardware controller, after which the sync bit that comes from the hardware controller is checked as represented by a block **309** to determine whether or not coarse lock has been achieved.

If sync is active (is equal to 1), then fine loop coefficients are loaded as represented by a block **310** and a programmable amount of time is allowed to lapse as represented by a block **311** before a sync bit is checked once again. As represented by a block **313**, the track error threshold value is loaded. The track error threshold is used to determine whether or not the tracking loop **42** is receiving timestamps suitable for updating the frequency of the numerically controlled oscillator **44**. As represented by a block **315** fine lock is checked. If fine lock is achieved the trial count is incremented via a YES path back to block **315** and further attempts to reacquire force lock can be made. Failure of fine lock causes a loop back to block **301** via a NO path and the acquisition process is restarted and also resets the trial counter. It is assumed that if fine lock has been achieved, then the interarrival estimation should be accurate.

The slot timing offset is determined by having the cable modem termination system **10** monitor a dedicated slot timing offset slot in upstream communications so as to determine the position of a slot timing offset message therein. The position of the slot timing offset message within the dedicated slot timing offset slot in the upstream communication determines the slot timing offset between the clock of the cable modem termination system **10** and the clock of the cable modem **12**. Thus, the cable modem termination system **10** may use this error to cause the cable modem **12** to transmit at an earlier point in time so as to compensate for propagation and processing delays. As illustrated in FIG. **11**, this slot timing offset correction is equal to 2 Tpg plus Tprocess.

Initially, the slot timing offset slot includes a comparatively large time slot, i.e., having comparatively large guard times, so as to accommodate comparatively large slot timing offset error. In a normal data packet, the width of the timing offset slot may be reduced when slot timing offset errors become lower (thus requiring smaller guard bands), so as to facilitate more efficient upstream communications.

Generally, communications will be initialized utilizing a comparatively large guard time. After acquisition, when slot timing accuracy has been enhanced, then the guard time may be reduced substantially, so as to provide a corresponding increase in channel utilization efficiency.

According to a further aspect of the present invention, data packets are acquired rapidly, e.g., in an order of sixteen symbol or so, so as to facilitate enhanced efficiency of bandwidth usage. As those skilled in the art will appreciate, it is desirable to acquire data packets as fast as possible, so as to minimize the length of a header, preamble or other non-information bearing portion of the data packet which is used exclusively for such acquisition.

As used herein, acquisition is defined to include the modifications or adjustments made to a receiver so that the receiver can properly interpret the information content of data packets transmitted thereto. Any time spent acquiring a data packet detracts from the time available to transmit information within the data packet (because of the finite bandwidth of the channel), and is therefore considered undesirable.

According to the present invention, acquisition includes the performance of fine adjustments to the parameters which are defined or adjusted during the ranging processes. During the ranging processes, slot timing, carrier frequency, and gross amplitude (power) of the data packet are determined. During acquisition, these parameters are fine-tuned so as to accommodate fractional symbol timing, carrier phase correction and fine amplitude of the data packet.

Moreover, according to the present invention, a ranging process is used to control power, slot timing and carrier frequency in the upstream TDMA channel. Power must be controlled so as to provide normalized received power at the cable modem termination system, in order to mitigate interchannel interference. The carrier frequency must be controlled so as to ensure proper channelization in the frequency domain. Slot timing must be controlled so as to mitigate the undesirable collision of data packets in the time domain and to account for differential propagation delays among different cable modems.

Fractional symbol timing is a precise modification to slot timing. In slot timing, the clocks of the cable modems are synchronized such that a data packet is transmitted within a slot defined by the cable modem termination system, so as to avoid collisions of data packets transmitted simultaneously by different cable modems. During acquisition, fractional symbol timing allows the receiver to sample symbols at the correct time. Thus, fractional symbol timing causes the receive symbols of the data packet to be aligned in time such that they are properly demodulated. As those skilled in the art will appreciate, it is important to detect the amplitude of QAM symbols at the correct time, so as to facilitate proper interpretation of the amplitude thereof.

Carrier phase correction is a fine tuning of carrier frequency correction, which is performed during the ranging

process. Carrier phase correction is necessary in order for the phase derotator to properly compensate for phase errors in the received packet.

Fine amplitude correction is a more precise correction to gross amplitude correction, which is performed during a ranging process. Amplitude corrections must be applied to the incoming data packet, so as to assure that the amplitude is properly defined prior to amplitude detection by the slicer.

Thus, according to the present invention, acquiring a data packet in a cable modem termination system includes determining fractional symbol timing correction, determining carrier phase correction and determining fine amplitude correction. According to the present invention, fractional symbol timing correction is determined by a feedback loop process, carrier phase correction is determined by a loop process and fine amplitude correction is determined by an estimation process. Unlike conventional methodology where fractional symbol timing correction, carrier phase correction, and fine amplitude are all determined by an estimation or correlation technique, this architecture can take advantages of the following merits: a) the same feedback loops can be used both for acquisition and tracking of symbol timing and carrier phase, and b) the carrier phase acquisition and small frequency offset correction (important during the ranging process) can be performed by using the second-order loop architecture.

More particularly, the present invention includes determining fractional symbol timing correction via a fractional symbol timing phase locked loop which controls a phase of a signal representative of the data packet being acquired as the data packet is processed in a resampler which provides an input to a phase derotator and includes determining a carrier phase correction which is performed by a carrier phase correction phase locked loop which controls a phase of a signal representative of the data packet being acquired in the phase derotator. In this manner, the fractional symbol timing is controlled as the signal representative of the data packet being acquired is processed by the resampler and the carrier phase is controlled as the derotator performs phase correction.

The first resampler **1154** (shown in FIG. **22**) provides a sample rate suitable for processing by a matched filter and/or the phase derotator. It allows the analog-to-digital converter sample rate and the symbol rate to be independent and also programmable by the resampling factor. Optionally, the matched filter processes the signal representative of the data packet being acquired before the resampler which provides a sample rate suitable for carrier phase recovery and a separate resampler **1146** (shown in FIG. **22**) is used to perform fast clock phase recovery, as discussed in detail below.

The matched filter compensates for the effects produced by a shaping filter of the cable modem transmitter which provided the data packet being acquired, according to well-known principles.

Thus, according to one aspect of the present invention, the signal representative of the data packet being acquired is processed by a first resampler to provide a sample rate suitable for the matched filter. Then, a signal representative of the data packet being acquired is processed by the matched filter. Then, the signal representative of the data packet being acquired is processed by a second resampler to provide a sample rate suitable for the phase derotator which the phase of the signal representative of the data packet being acquired is processed by a phase derotator to effect correction of a phase of either the in-phase (I) or quadrature (Q) channel of a QAM signal while the phase of the signal representative of the data packet being acquired is controlled by a carrier phase correction phase locked loop. Then, the signal representative of the data packet being acquired is multiplied by an estimated amplitude correction factor to provide a signal suitable for processing by the slicer. Then, the signal representative of the data packet being acquired is processed by the slicer to effect demodulation of an amplitude component of the I or Q channel of the QAM signal.

Optionally, the input gain (or phase detector gain) of the fractional symbol timing phase locked loop and/or the carrier phase correction phase locked loop by sensing an amplitude input to a phase detector of the loop and modifying the amplitude of the input to the loop filter.

As those skilled in the art will appreciate, loop filters tend to be amplitude sensitive since the coefficients selected therefor may not be valid if the input to the phase detector has an amplitude which is substantially different from that for which the coefficients were selected. The use of coefficients which are not suitable for the input amplitude to the phase detector may therefore result in undesirably increased acquisition time of the signal being acquired.

According to the present invention, use of the fractional symbol timing feedback loop and the carrier phase loop with minimum loop delay, as well as the fine amplitude estimation process, facilitate the acquisition of a data packet having a preamble which is sixteen symbols or less in length.

According to the present invention, the preamble includes a binary pattern **1111** and a unique word **1112** (FIG. **17**). Further, according to the present invention, both the binary pattern and the unique word are modulated using quadrature phase shift keying (QPSK). Thus, the entire preamble is modulated using QPSK.

The fractional symbol timing and the carrier phase are determined using the binary pattern of the preamble. The fine amplitude correction is determined using the unique word of the preamble.

According to one aspect of the present invention, as shown in FIG. **24**, the fractional symbol timing acquisition is accelerated by utilizing two offset symbol sampling clocks and selecting that offset symbol sampling clock which provides samples having the highest absolute value at the beginning of each burst. As those skilled in the art will appreciate, when only a single symbol sampling clock is utilized, the phase of the symbol sampling clock may be such that samples of the alternating binary pattern are taken at times when the alternating binary pattern is near the transition point, i.e., has a value which is approximately zero, and the sample levels are therefore ambiguous or difficult to reliably determine.

Thus, when only one symbol sampling clock is utilized, the phase of that single symbol sampling clock must be varied until the alternating binary pattern is properly acquired. As those skilled in the art will appreciate, varying the phase of the single sampling clock until the alternating binary pattern is properly acquired (has sufficient amplitude) is undesirably time consuming and thus results in a greater acquisition time of the alternating binary pattern of the preamble.

The use of two offset symbol sampling clocks, particularly when the two offset symbol sampling clocks are offset approximately 180 degrees with respect to one another, inherently causes one of the two symbol sampling clocks to sample when the amplitude of the alternating binary pattern is sufficient to reliably determine the information content thereof. Thus, according to this aspect of the present invention, two offset symbol sampling clocks, each having a phase difference of approximately 180 degrees with respect

to the other, are utilized and that clock which provides the best, e.g., highest amplitude (absolute value) is utilized in the sampling process for the alternating binary pattern of the preamble. The use of two offset symbol sampling clocks thus substantially shortens the acquisition time of the alternating binary pattern.

Referring now to FIG. **4**, the cable modem termination system **1042** (typically defined by the line card of FIG. **2**) comprises a burst receiver **292** for receiving data packets in the upstream data flow, a continuous transmitter **290** for broadcasting to the cable modems **12** via the downstream data flow and a medium access control (Headend MAC) **60** for providing an interface between the burst receiver **292**, the continuous transmitter **290** and other headend communications devices such as video servers, satellite receivers, video modulators, telephone switches and Internet routers **1018** (FIG. **1**).

Each cable modem **12** (FIG. **2**) comprises a burst transmitter **294** for transmitting data to the cable modem termination system including line card **1042** via downstream data flow, a continuous receiver **296** for receiving transmissions from the cable modem termination system including line card **1042** via the upstream data flow and medium access control (Subscriber MAC) **90** for providing an interface between the burst transmitter **294**, the continuous receiver **296** and subscriber communications equipment such as a PC **1048** (FIG. **2**), a telephone, a television, etc.

The burst receiver **292**, Headend MAC **60** and continuous transmitter **290** of the cable modem termination system including line card **1042** and the burst transmitter **294**, Subscriber MAC **90** and continuous receiver **296** of each cable modem may each be defined by a single separate, integrated circuit chip.

Referring now to FIG. **5**A, the cable modem termination system including line card **1042** of FIG. **2** is shown in further detail. The cable modem termination system including line card **1042** is configured to receive signals from and transmit signals to an optical fiber **79** of the hybrid fiber coax (HFC) network **1010** (FIG. **2**) via optical-to-coax stage **49**, which is typically disposed externally with respect to the cable modem termination system including line card **1042**. The optical-to-coax stage **49** provides an output to the 5–42 MHz RF input **84** via coaxial cable **54** and similarly receives a signal from the RF upconverter **78** via coaxial cable **54**.

The output of the RF input **84** is provided to splitter **57** of the cable modem termination system including line card **1042**, which separates the 5–42 MHz RF input into N separate channels. Each of the N separate channels is provided to a separate QPSK/16-QAM burst receiver channel **85**.

Each separate QPSK/16-QAM burst receiver channel **85** is in electrical communication with the headend MAC **60**. The headend MAC **60** is in electrical communication with backplane interface **62** which provides an interface to ROM **73**, RAM **68**, CPU **66**, and 100 BASE-T Ethernet interface **64**.

The headend MAC **60** provides clock and a data output to the downstream modulator **72** which provides an output to amplifier **76** through surface acoustic wave (SAW) filter **74**. Amplifier **76** provides an output to 44 MHz IF output, which in turn provides an output to the RF upconverter **78**.

Each burst receiver **85** is configured so as to be capable of receiving both QPSK (4-QAM) or 16-QAM signals. The QPSK signals provide 2 bits per symbol, wherein each bit has ±1 amplitude levels. The 16-QAM signals provide 4 bits per symbol, each bit having a ±1 or ±3 amplitude level.

However, the description and illustration of a burst receiver configured to accommodate QPSK and 16-QAM inputs is by way of illustration only and not by way of limitation. Those skilled in the art will appreciate that other modulation techniques, such as 32-QAM, 64-QAM and 256-QAM may alternatively be utilized.

The cable modem **12** in FIG. **2** is shown in detail in FIG. **5**B within a rectangle **258**. The system shown in FIG. **5**B includes a diplex filter **259**. The systems shown in FIGS. **5**A and **5**B can be combined into a single block diagram by rotating FIG. **5**B through an angle of 180° so that the diplex filter **259** appears in inverted form at the right end and by then disposing the sheets adjacent each other.

The signals from the diplex filter **259** in the range of 54–860 MHz pass to an RF tuner **260** and then to a surface acoustic waver filter (SAW) **261** which provides signals at a suitable frequency such as approximately 44 MHz to an amplifier **262**. The amplified signals pass to a 64/256-QAM downstream receiver **263** with forward error correction (FEC). Automatic gain controls are provided from the receiver **263** to the tuner **260**. Clock and data signals then pass from the receiver **263** to a medium access controller (MAC) **264** which introduces signals through an interface **265** to individual ones of a 10 Base-T transceiver **266**, a CPU **267**, a random access memory (RAM) **268** and a read only memory (ROM) **269**.

The signals from the individual ones of the 10 Base-T transceiver **266**, the CPU **267**, the RAM **268** and the ROM **269** pass through the interface **265** to the medium access controller (MAC) **264**. The signals from the MAC controller **264** are then introduced to a QPSK-16 QAM upstream burst modulator **270** with forward error correction. The signals from the burst modulator **270** are provided to a low pass filter **271** which passes signals in the range of 5–42 MHz when the system is used in North America. The low pass signals are then introduced to a power amplifier **272**, the output from which is provided to the diplex filter **259**. The gain in the power amplifier **272** is regulated by the burst modulator **270**.

In order to provide an enhanced understanding of the invention, certain terminology used in this application will now be defined. A "MAP" is provided from the headend **10** to the subscriber modem **12**. A MAP defines a next frame. A "frame" is a generic term to define a group or a multiple number of slots.

FIGS. **7**A and **7**B are block diagrams showing at the subscriber cable modem **12** the encrypting and decrypting system discussed herein. In FIG. **7**A, data packets with encrypted data and control information are received at the cable modem **12** from the headend **10** by the receiver **296** (also shown in FIG. **4**). The control information may illustratively indicate the information provided in a request contention region **486**, a CM tx opportunity region **488** or a maintenance region **490**, all shown in FIG. **36**. The data packets are then introduced to a downstream processor **342** which parses the data and the control information and introduces the encrypted (parsed) data through a line **343** (FIGS. **7**A and **7**B) to a downstream decryptor **344** (FIG. **7**B). The decrypted data is then introduced from a downstream (D/S) direct memory access (DMA) **306** through a memory interface **308** in a DMA controller **312** to a first area in a static random access memory (SRAM) **314**. The control information also passes through a DMA **391** and the memory interface **308** in the DMA controller **312** to a second area in the SRAM **314**.

When data is to pass from the SRAM **314** to the headend **10**, the decrypted data and the control information are read

from the separate areas in the SRAM and are passed through an upstream direct memory access (DMA) **522** in the DMA controller **312**. An upstream header processor **319** introduces decrypted information from the SRAM **314** to an upstream header processor **319**. The decrypted data is then encrypted in an upstream data encryption standard (DES) circuit **321**. The encrypted data from the DES **321** and the control information from the upstream header processor **319** then respectively pass through lines **322** and **323** (FIGS. **7**A and **7**B) to an upstream control **324** in FIG. **7**A.

The upstream control **324** provides an interface which receives timing from a timing regeneration circuit (TRC) **341** to control the time when the encrypted data passes from the DES circuit **321**. The encrypted data and the control information are then combined in the transmitter **325** (also shown as transmitter **294** in FIG. **4**) at the subscriber modem **12** to form the extended packets. A serial peripheral interface) **326** provides an interface for control information between the upstream control **324** and an SPI bus leading to a tuner and EEPROMS.

Each individual subscriber has an encryption unique to that subscriber. This encryption is encoded by the headend **10** in packets sent to that individual subscriber and is decoded by the individual subscriber. In like manner, the encryption is encoded by the subscriber modem **12** in extended packets sent by the individual subscriber to the headend **10** and is decoded by the headend.

FIGS. **8**A and **8**B are block diagrams similar to those shown in FIGS. **7**A and **7**B. However, FIGS. **8**A and **8**B show the system at the headend **10** for encrypting the data in packets sent by the headend to the individual subscriber modem **12** and for decrypting the packets sent by the individual subscriber modem to the headend. The system shown in FIGS. **8**A and **8**B may be disposed on an integrated circuit chip.

As shown in FIGS. **8**A and **8**B, packets of data may be introduced to the headend **10** by a data queue **327** in a server external to the integrated circuit chip or may be introduced to the memory from a local bus interface **328** or a CPU interface in the chip. The interface **328** provides a control for a direct memory access (DMA) engine **329** similar in construction to the DMA **306** in FIG. **7**B. The packets from the data queue **327** are stored in a downstream (D/S) data buffer or FIFO **533**. The packets are parsed by a downstream parser **364** and the data in the parsed packets is encrypted by a DES encryption engine **535**. The encryption is different for each individual subscriber modem **12** and is controlled by a DRAM access controller **531**, which accesses a key DRAM **728**.

The encrypted data from the DES encryption engine **535** are introduced to a cyclic redundancy code/header check sum (CRC/HCS) inserter **361**. The CRC/HCS inserter **361** provides a parity check to make certain that the packet is complete. The CRC/HCS inserter **361** combines the encrypted data from the DES encryption engine **535** and the other control information from the downstream parser **364** in the extended packet. The extended packets meeting the tests of the CRC/HCS inserter **361** are passed through a line **389** in FIGS. **8**A and **8**B and are stored in a downstream transmit buffer TxFIFO **390** in FIG. **8**B. The stored information and timing information from a timing generation circuit **341** are introduced to a downstream controller **392**, which arbitrates between data and timing information.

The signals from the downstream controller **392** pass through a downstream (D/S) data interface **396** to the transmitter **537** external to the integrated circuit chip. The transmitter **537** transmits the packets downstream to the subscriber modem **12** identified by the encryption in the packets. A serial peripheral interconnection provides an interface for control information, but not data, between the integrated circuit chip (FIG. **8**A) and the transmitter **537** and between the integrated circuit chip and a plurality (e.g., eight) of receivers **394**, which are external to the integrated circuit chip.

An upstream (U/S) data interface **395** is connected between each of receivers **394** and a corresponding upstream receive (U/SRx) buffer memory (Rx FIFO) **555**. The information in the buffer memory **555** is introduced to an upstream channel arbiter **397**. The arbiter **397** selects the packets from one of the eight receivers at each instant in accordance with the source of the data provided in a MAP FIFO **274**. For example, the packets from one of the receivers **394** may be selected when the packets are marked with the code for that receiver in the MAP for that channel.

The packets passing through the arbiter **397** are stored in the FIFO **523** in FIG. **8**A and are introduced from the FIFO **523** through a line **431** to an upstream parser **557**. The parser **557** passes the data to a DES data decryption engine **434** and the other (e.g., control) information to a cyclic redundancy code/header check sum (CRC/HCS verification) stage **444**. The DES decryption engine **434** decrypts the encrypted data under the control of the DRAM access controller **531** and passes the decrypted data to the CRC/HCS stage **444**. The CRC/HCS stage **444** combines the decrypted data and the other information to re-form the extended packets and passes the reformed packets to a buffer or FIFO **445**. The packets then pass through the DMA engine **329** to the host system memory disposed externally of the integrated circuit chip in a server.

A serial peripheral interface (SPI) controller **426** in FIG. **8**A corresponding to the serial peripheral interface (SPI) **326** in FIG. **7**A is connected to the local bus interface **328** to provide an interface for control information to write into the data queue **327**. A management information base (MIB) **432** stores statistical errors produced by the stage relating to undetected data packets, uncorrectable data packets and signal-to-noise ratios in data packets, for use in connection with FIGS. **32** and **33**.

The burst receiver used to practice this invention is shown as the block **292** in FIG. **4**. As shown in FIG. **4**, the burst receiver is disposed at the headend **10** to receive packets of symbols from the subscriber modem **12**. As illustrated in FIG. **35**, Each packet includes a preamble **720**, a unique word **721**, an equalizer train **722**, a payload **723**, and a guard time **724**.

The preamble may be limited to as few as **16** symbols. It includes a first group of symbols which have a binary alternating sequence in a particular pattern to provide for a fast synchronization of the headend **10** to the carrier frequency of the signals from the subscriber modem **12**. It may also include symbols which distinguish the subscriber modem **12** from the other subscriber modems on the channel.

The unique word **721** is in a distinctive symbol pattern to indicate the end of the preamble **720** and the beginning of the payload **723**. The payload **723** may be of variable size depending upon the length of the communication from the subscriber modem **12** to the headend **10**. The equalizer train **722** may be provided between the unique word **721** and the payload **723**. The equalizer train **722** may be in a random sequence. It is provided during the initialization period to train the equalizer to provide proper coefficients to the subscriber modem **12**.

Additional details in the construction of the burst receiver **292** are shown in FIG. **9**. In FIG. **9**, incoming radio frequency (IN RF) signals are introduced on a line **460** to a downconvert stage **514** which converts the signals to an intermediate frequency. The signals then pass to a demodulator **448** which recovers the modulated data. The signals from the data demodulator **448** are introduced to an equalizer **453** which may illustratively be for constellations designated as 16-QAM.

The signals from the equalizer **453** are introduced to a preamble processing stage **520**. The stage **520** processes the preamble **720** to provide for a very fast synchronization of the headend **10** to the frequency of the carrier signals from the subscriber modem **12**. This is important in insuring that the headend **10** will process all of the data symbols in the packets from the subscriber modem **12**.

The stage **520** also provides a ranging operation on the symbols transmitted from the subscriber modem **12** to the headend **10**. One aspect of this ranging operation is to determine the time between the transmission of the symbols from the headend **10** to the subscriber modem **12** and the transmission of symbols from the headend to the subscriber in response to the symbols transmitted from the headend to the subscriber.

Since the distance between the headend **10** and the subscriber modem **12** may be as great as approximately one hundred (100) miles, the time between the transmission of symbols from the headend **10** to the subscriber modem **12** and the response of the subscriber to the headend may be large. Until this time is determined and a window is provided at the headend around this determined time, the headend **10** cannot operate effectively in processing the symbols from the subscriber.

The ranging operation involves the determination at the burst receiver of such parameters as the ranging offset measurement, the equalizer coefficients, the burst power level, the slot timing error and the carrier frequency offset. The signals from the stages **520** are introduced to the demodulator **448**.

In addition to being introduced to the stages **520**, the signals from the equalizer **453** are introduced to a de-randomizer **275**. The de-randomizer **275** de-interleaves the signals which have been previously interleaved at the subscriber modem **12** to prevent data from the subscriber from being lost as a result of noise in the cable. The de-randomized signals then pass to a Reed-Solomon (RS) decoder **524** which corrects for errors in the packets. The signals then pass through MAC **60** (also shown in FIG. **4**) to an output line **526**.

Reference is made to FIG. **10** for additional details of the burst receiver shown in FIG. **9**. These additional details include a fine mixer **462** which processes the received quadrature phase signals on the lines **538** and **540**. The fine mixer **462** also receives signals from a direct digital frequency synthesizer (DDFS) **463** which is constructed in a well known manner to provide signals for mixing with the signals on the lines **538** and **540** to provide beat frequency signals.

The quadrature phase signals from the fine mixer **462** respectively pass through low pass filters **464** and **465** to a clock frequency recovery stage **552**. The clock frequency recovery stage may include a phase locked loop with a numerically controlled oscillator to provide a fast recovery of the frequency of the carrier signals from the subscriber modem **12**. A phase locked loop with a numerically controlled oscillator may be generally known in the prior art but not for the purpose of providing a fast recovery of the frequency of the carrier signals from a subscriber such as the subscriber modem **12**.

The quadrature phase signals from the clock frequency recovery stage **552** pass to decimation filters **554** and **466**. The decimation filters **554** and **466** change the frequency of the signals from the clock frequency recovery stage **552** to a suitable frequency such as four (4) times the symbol rate. The signal then pass to Nyquist filters **558** and **467**. The Nyquist filters **558** and **467** constitute matched filters which provide signals at the desired frequency.

The signals from the Nyquist filters **558** and **467** are in turn introduced to a clock phase recovery stage **468**. The clock phase recovery stage **468** may include a phase locked loop with a numerically controlled oscillator to provide a recovery of the phase of the carrier signals from the subscriber modem **12**. A phase locked loop with a numerically controlled oscillator may be generally known in the prior art, but not for the purpose of providing a fast phase recovery of the carrier signals from a subscriber such as the subscriber modem **12**.

There are significant differences between the prior art and applicant's system involving frequency and phase recovery of the carrier signals from the subscriber **12**. These differences cause applicant to recover the frequency and phase of the carrier signals significantly faster than in the systems of the prior art. Applicant's system provides separate clock frequency recovery and clock phase recovery stages and disposes the Nyquist filters between the clock frequency recovery and clock phase recovery stages. In the prior art, clock frequency recovery and clock phase recovery stages are combined into a single stage and the Nyquist filters are disposed after this single stage.

A power estimator and start-of-burst detector stage **276** receives signals from a stage **481** designated as "Ranging Process." The ranging process is described in detail below. The start-of-burst detector responds to start-of-burst signals which are initially provided in the packet **719** in FIG. **35** at the headend **10** to indicate the time between the transmission of symbols from the headend **10** to the subscriber modem **12** and the reception of return signals by the headend from the subscriber. These start-of-burst signals are preferably start-of-burst signals in the same pattern as provided by the headend **10** to the subscriber modem **12** but they may be in other patterns without departing from the scope of the invention. As previously discussed, the distance between the headend **10** and the subscriber modem **12** may be as great as one hundred (100) miles. This involves a total delay of approximately one and six tenths milliseconds (1.6 ms) between the transmission of signals from the headend **10** to the subscriber modem **12** and the return of signals from the subscriber to the headend.

FIG. **11** illustrates the delay between the transmission of signals from the headend **10** designated HE to the subscriber modem **12** designated SU and the return of signals from the subscriber to the headend. In FIG. **11**, time is indicated along the horizontal axis and distance along the vertical axis. The signal is shown as being transmitted from the headend **10** at a time **482** as a downstream message to the subscriber modem **12**. The subscriber modem **12** then processes the message during a time **484** designated as "T process". After processing the message, the subscriber modem **12** then sends an upstream message, which is received at the headend **10** at a time **493**. The transmission time between headend **10** and subscriber modem **12** is designated Tpg. The contention resolution interval (CRI) is the sum of 2 Tpg and "T process". A ranging window **495** is provided at the

headend to indicate the time period during which the headend **10** would ordinarily expect to receive the return signals from the subscriber modem **12**. As shown, the duration Tdd of the window **495** encompasses the time period "T process". A time indication **499** is shown at the middle of the window **495** to indicate the time that the return signal from the subscriber modem **12** would ordinarily be expected at the headend **10**.

The start-of-burst signals initially transmitted from the headend **10** to the subscriber modem **12** are in a simple binary pattern. Signals are then transmitted by the subscriber modem **12** to the headend **10**, preferable in the same pattern as the start-of-burst signals transmitted from the headend to the subscriber. In order for the headend **10** to act upon these signals, the signals have to be above a particular power level. They indicate to the headend **10** the that the subscriber modem **12** is going to be sending, preferably immediately thereafter, to the headend **10** signals for initial maintenance. These initial maintenance signals are indicated at **490** in FIG. **36**.

Thereafter, the headend **10** sends maintenance signals periodically to the subscriber **12**. The time periods allocated by the headend to the subscriber modem **12** for this subsequent maintenance can be quite precise because of the action of the time-of-burst signals in determining the time between the transmission of signals from the headend **10** to the subscriber modem **12** and the return of the signals from the subscriber to the headend.

The signals from the stage **468** in FIG. **10** are introduced to a tracking loop **575** which provides a phase locked loop for the payload **723** in the packets **719** in FIG. **35**. The signals from the tracking loop pass to clock generator logic **501** as do the signals from a fast clock recovery circuit **579**. The tracking loop **575**, the clock generator logic **501** and the fast clock recovery circuit **579** facilitate the operation of the clock phase recovery stage **468** in recovering the phase of the carrier signals from the subscriber modem **12**.

The signals from the tracking loop **575** also pass to a phase read only memory (ROM) **503**. The memory **503** also receives signals from a fast carrier recovery stage **581**. The stage **581** may include a phase locked loop for processing the preamble **720** in the packets **719** in FIG. **35** on a fast basis to recover the frequency of the carrier signal. The phase ROM **503** and the stage **581** are included in a derotator (FIGS. **21** and **22**) that provides a carrier phase derotation of the signals from the fast carrier recovery stage **581**. Such derotators are well known in the art.

The quadrature phase signals from the stage **468** are respectively coupled by a carrier phase de-rotator stage **577** to a pair of multipliers **583** and **509** and to an input terminal of an amplitude estimator **585**. The signals from the amplitude estimator **585** are also introduced to the multipliers **583** and **509**. The amplitude estimator interpolates the derotated quadrature phase signals from the stage **581** to determine the peaks of these derotated signals. The amplitude estimator **585** then decimates the interpolations between the peaks so that only the peaks remain.

The peak signals from the amplitude estimator **585** are then introduced to an equalizer **596** which operates in a well known manner to eliminate from the peak signals noise from extraneous sources and noise from reflections in the line between the headend **10** and the subscriber modem **12**. Equalizers corresponding to the equalizer **596** are known in the art. The operation of the equalizer **596** is controlled by an equalizer control **598**.

The quadrature phase equalizer signals then pass to slicers **511** and **513**, which are known in the art. The slicers **511** and **513** provide a plurality of amplitude levels depending upon the constellation (e.g., 4-QAM, 16-QAM) of the signals being processed and select the individual one of these amplitude levels closest in amplitude levels to the amplitudes of the peak signals from the amplitude estimator **585**.

The outputs from the slicers **511** and **513** pass to a base band processor **587** and to a unique word detector **515**. The unique word (UW) detector **515** detects the end of the preamble **720** and the beginning of the payload **723** in the packets **719** in FIG. **35**. The output from the unique word detector **515** is introduced to the base band processor **587** to control the operation of the processor. Among other functions, the base band processor **587** provides forward error correction to correct errors in the payload **723** in the packets **719** in a well known manner.

The burst receiver **292** shown in FIGS. **9** and **10** has certain important advantages. It provides for a determination by the headend **10** of the frequency and phase of the carrier signals from the subscriber modem **12** in as few as sixteen (16) symbols in the preamble **723** (FIG. **35**), not counting the start-of-burst signals initially included in the preamble. This is advantageous because it is important to acquire a fast acquisition of symbols in each packet **723**, particularly since the burst receiver **292** is acquiring data from different subscriber modem in successive regions in each frame. If the symbols in each packet are not acquired fast, valuable information may be lost.

The burst receiver **292** also provides for ranging functions (e.g., slot timing, power level, carrier frequency (FIG. **4**) after the determination of the timing interval, by the start-of-burst signals, between the transmission of signals from the headend **10** to the subscriber modem **12** and the return of the signals to the headend has been determined. The burst receiver **292** shown in FIGS. **9** and **10** also provides for each subscriber to send and receive the signals in the packets **719** in programmable constellations (e.g., QPSK, 16-QAM) in accordance with the signal-to-noise ratio in the line between the subscriber modem **12** and the headend. It further provides for different subscriber modems in the same channel to send and receive signals in the packets in different constellations and at different baud rates (e.g., 160 K Baud, 5.12 M Baud). This is true even within successive regions in the same frame. This occurs on a subscriber-by-subscriber basis for the different subscriber modems in the channel.

As previously described each channel includes a plurality of subscriber modems, each of which can operate with different constellations and at different baud rates. Furthermore, as shown in FIG. **31**, the subscriber modem in different channels can operate in a range of frequencies from five megahertz (5 MHz) to forty-two megahertz (42 MHz) in North America and at frequencies even higher than forty-two-megahertz (42 MHz) in foreign countries. This causes differences of power between the signals in the subscriber modem in different channels to have a range as fifty decibels (50 db). This is a considerable dynamic range in power. It would be accordingly difficult to compensate in a single stage for such a considerable difference.

This invention provides a system for compensating in a simple and efficient manner for differences in power as much as fifty decibels (50 db) between subscriber modems in different channels. The system accomplishes this by providing a portion of the compensation while the signals are in analog form and by providing the remaining portion of the compensation after the analog signals have been converted to a digital form.

A system for accomplishing the objectives discussed in the previous paragraph is shown in FIGS. **25**A and **25**B. It

includes a filter **610** having a filtering range of approximately five megahertz (5 MHz) to forty-two megahertz (42 MHz) corresponding to the frequency range of the channels in North America. The signals from the filter **610** are introduced to an analog amplifier **612**.

The differences in the level of power in the filter **610** and the analog amplifier **612** for different subscriber modems **12** may be high because the signals are provided through the entire range of frequencies in the channels. (See FIG. **31** for the range of frequencies in the channels.) A suitable portion of the dynamic range of power of approximately fifty decibels (50 db) for the different subscriber modems **12** is handled in the filter **610** and the analog amplifier **612**. For example, this portion may be approximately twenty decibels (20 db). This is accomplished by setting the gain threshold of the analog stages so that power is obtained from the amplifier **612** only above a specified level represented by the threshold.

The signals from the filter **610** are also introduced to an analog-to-digital (A/D) converter **614**. The signals from the converter **614** pass to a wide band power estimator **616**. The output of the power estimator **616** is introduced to a stage **618** for regulating gain. The output from the stage **618** passes to an input to the analog amplifier **612**. The output of the analog amplifier **612** is connected to a burst demodulator **519**. The A/D converter **614**, the wide band power estimator **616**, the gain regulating stage **618** and the burst demodulator **519** are included in the burst receiver **292** which is indicated in FIGS. **25**A and **25**B by broken lines.

The power estimator **616** measures the power of the signals from the subscriber modem **12** at each frequency in a channel. This can be accomplished by shifting the frequency of the power estimator **616** through the different frequencies in the channel. In this way, the power estimator **616** measures the average power of the signals transmitted in the channel by the subscriber modem **12** to the headend **10**. The gain regulating stage **618** regulates the value of this average power at a particular value. The regulated gain is introduced to the analog amplifier **612** which amplifies the signal from filter **610** and introduces the amplified signal to the burst demodulator **519**. In this way, the burst demodulator **519** handles the remaining portion of the dynamic range of power. This may illustratively be approximately thirty decibels (30 db) when the dynamic range of power for the subscriber modem **12** in the different channels is approximately fifty decibels (50 db).

When the burst receiver **292** receives one of the packets **719** from the subscriber modem **12**, it determines if the unique word **721** matches the pattern for the unique word at the burst receiver. If such a match occurs, this indicates that the applicable payload **723** follows in the packet **719**. A count is then made of a particular number of symbols from the end of the unique word in the direction toward the preamble. This count may include a portion of the preamble. The amplitude of the signals in each of these symbols is then determined and the average of these amplitudes in each of these symbols is then computed.

The average amplitudes for the different symbols are then added and the sum is divided by the number of symbols involved in the computation to obtain a resultant value. This value is inverted and the inverted value is latched. The latched value is used to recover the payload **723** to offset any difference between a desired amplitude and an actual amplitude for the bits in the payload symbols. For example, if the resultant value is 2. the inverted value is accordingly k and this value is latched. So one-half (k) of the amplitude of each bit in each symbol is used as the amplitude value of the bit.

To determine a power value that is used for correction in FIG. **4**, a count is made of a particular number of symbols from the beginning of the unique word in the direction toward to the preamble. This count may include a portion of the preamble. The average power in each symbol in the count is then determined and the average power in the different symbols is added to obtain a resultant value. This resultant value is divided by the particular number of symbols to obtain the correctional value that is used in obtaining the power level at the subscriber modem **12** as shown in FIG. **4** and described above.

Referring now to FIG. **14**, a contemporary, continuous transmission is shown wherein a series of contiguous payloads **1101**, such as those defined by data packets, are concatenated to define a generally continuous data stream **1100**. Because the data stream **1100** is generally continuous, e.g., does not contain periodic interruptions, acquisition only occurs infrequently, such as during startup or initialization.

The contemporary data stream **1100** as shown in FIG. **14** is suitable for point-to-point transmission, such as between a single transmitter and a single receiver.

Referring now to FIG. **15**, data bursts **1105** define a discontinuous data stream **1103**. The data bursts **1105** are typically defined by data packets and are separated by guard bands **1107**.

The area between guard bands **1107** where the data bursts **1105** are located is defined by a time division multiple access (TDMA) time slot which the cable modem termination system including line card **1042** pre-assigns to cable modems **1046** which have previously requested such time slots in order to facilitate upstream communications. The guard bands **1107** provide some tolerance between adjacent time slots, so as to mitigate the occurrence of undesirable data collisions between adjacent data packets.

It is possible, such as in light data traffic conditions, that one or more adjacent time slots might be empty, thereby further increasing the time between adjacent data bursts.

Because the data bursts **1105** are discontinuous, each data packet which defines a data burst must be reacquired by the burst receiver **85** (FIG. **5**A).

The discontinuous nature of such time division multiple access (TDMA) upstream communications is thus due to the fact that a plurality of different cable modems are competing for upstream channel bandwidth. Since the upstream channel is divided into a plurality of time slots, so as to accommodate the plurality of cable modems transmitting in the upstream channel, it is difficult, if not impossible, to define a single, continuous upstream data transmission.

Thus, the discontinuous nature of the upstream data communication necessitates the use of a burst receiver which is capable of re-acquiring each individual data packet.

Referring now to FIG. **16**, the data packet which defines each data burst **1105** comprises a QPSK or QPSK-like preamble (i.e., a subset of 16-QAM constellations) **1109** and a 16-QAM payload **1110**. The QPSK preamble **1109** is an order of sixteen symbols long. It is during this sixteen symbol QPSK preamble **1109** that acquisition by the burst receiver **85** takes place. It is during acquisition that fractional symbol timing correction, carrier phase correction and fine amplitude correction are determined, so as to facilitate proper and reliable demodulation of the 16-QAM payload **1110**.

Referring now to FIG. **17**, the QPSK preamble **1109** comprises a binary pattern **1111** (better shown in FIG. **24**) and a unique word **1112**. The binary pattern **1111** of the QPSK preamble **1109** is used in the recovery or acquisition of fractional symbol timing and carrier phase. The unique

word is used in the recovery or acquisition of fine amplitude. The unique word also optionally provides an identification of the transmitting cable modem **1046**.

Fractional symbol timing correction and carrier phase correction are both determined by fast feedback loop processes. According to the present invention, fractional symbol timing correction is performed by a fractional symbol timing phase locked loop and carrier phase correction is performed by a carrier phase correction phase locked loop, both of which are discussed in detail below.

Referring now to FIG. **18**, a contemporary phase locked loop **1120** comprises a phase detector **1122** to which a first signal is provided at input **1124**. The signal provided to the first input **1124** is a signal having some degree of timing information. The timing of the signal provided to input **1124** may not be stable and/or may not be comprised of well-defined, substantially noiseless pulses, such as those of an oscillator or a clock.

When it is desired to provide a comparatively stable, well-defined noiseless reference signal, such as that which may be used to facilitate sampling in an analog-to-digital converter, it is necessary to use the original signal to facilitate timing recovery.

The phase detector **1122** provides an output which is proportional to a difference in phase between the signal provided at input **1124** and a feedback signal provided at input **1125**. Because the output of the phase detector **1122** typically comprises an undesirable high frequency component, loop filter **1127** is used to assure that only desirable low frequency components of the output of the phase detector **1122** are provided to voltage controlled oscillator **1129**. The output of voltage controlled oscillator **1129** is provided as a reference signal or the second input **1125** to phase detector **1122**. The output of voltage controlled oscillator **1129** also forms the desired comparatively stable, well-defined, substantially noise-free reference for use in such applications as clocking or sampling.

Referring now to FIG. **19**, a simplified phase locked loop **1140***a* typically used in a digital receiver, which includes a matched filter **1145***a* in addition to the standard phase locked loop components of a loop filter **1148**, a numerically controlled oscillator **1149** and phase detector **1147**, is shown. The phase locked loop shown in FIG. **19** is a somewhat simplified version of the fractional symbol timing correction phase locked loop of FIG. **22**, which likewise includes a matched filter.

It is important to understand that the matched filter **1145***a* of the simplified phase locked loop **1139***a* inherently represents an undesirable time delay, and thus, undesirably increases acquisition time of the phase locked loop **1139***a*.

Referring now to FIG. **20**, according to one aspect of the present invention (shown in detail in FIG. **22**), the matched filter **1145***a* is moved outside of the phase locked loop **1140***b* so as to remove the undesirable time delay from the loop and thereby improve the acquisition time thereof. The phase locked loop shown in FIG. **20** is a somewhat simplified version of the fractional symbol timing correction phase locked loop of FIG. **22**, wherein the matched filter has been moved outside of the phase locked loop.

Referring now to FIG. **21**, according to one aspect of the present invention, a burst receiver circuit **1139***a* comprises a fractional symbol timing phase locked loop **1140***a*, a carrier phase correction phase locked loop **1141** and an amplitude estimator circuit **1142**. As shown in FIG. **21**, the matched filter **1145***a* of the fractional symbol timing phase locked loop **1140***a* is inside the phase locked loop defined by resampler **1146**, phase detector **1147**, loop filter **1148** and numerically controlled oscillator **1149**. According to this aspect of the present invention, the matched filter **1145***a* introduces an undesirable time delay, thereby inhibiting fast acquisition of the fractional symbol timing.

The burst receiver **1139***a* shown in FIG. **21** includes an analog-to-digital converter **1150**, a down converter which includes a direct digital frequency synthesizer **1151** and a mixer or multiplier **1152**, and a low pass filter **1153** for removing unwanted high frequency components which result from the mixing process of the down converter.

The carrier phase correction phase locked loop **1141** includes the phase derotator **1160**, phase detector **1161**, loop filter **1162** and numerically controlled oscillator **1163**, which operate as discussed above with respect to FIG. **9** so as to provide a phase reference signal to the phase derotator **1160** which corrects error in the carrier phase and small residual frequency error of the data packet which otherwise would tend to cause errors in the amplitude demodulation or slicing process.

Conventional coherent amplitude estimator circuit **1142** includes a conventional coherent amplitude estimator **1165** which operates according to well-known principles to provide an amplitude estimate or correction factor after fractional symbol timing and fine carrier frequency synchronization have been achieved.

The amplitude estimate or correction factor is applied to the data packet via multiplier **1166** before the data packet is input to equalizer **1170** which compensates for channel spectral deficiencies which would otherwise inhibit reliable amplitude demodulation by the slicer **1171**.

Referring now to FIG. **22**, burst receiver **1139***b* is identical to burst receiver **1139***a* with the exception that matched filter **1145***b* is outside of both phase locked loop **1140***b*, so as to avoid the undesirable inherent introduction of a delay in acquisition time caused by placing the matched filter **1145***b* within the timing recovery loop **1140***a* as shown in FIG. **21**. This mitigates undesirable delays within the fractional symbol timing loop caused by the matched filter. The minimum delay in the loop is essential for fast burst acquisition using the feedback loop architecture. An open-loop resampler is also required to resample the input signal relative to the symbol rate, independent of the ADC sample clock rate. Since the matched filter **1145***b* is placed ahead of resampler **1146** of the fractional symbol timing phase locked loop **1140***b*, a second resampler **1154** must be provided ahead of matched filter **1145***b* so as to provide the digitized data burst to the matched filter **1145***b* at a proper sample phase of the data.

Referring now to FIG. **23**, phase detector gain boosting logic may optionally be provided so as to further enhance the speed at which acquisition occurs. As those skilled in the art will appreciate, the loop filter **1201** of a phase locked loop **1200** is sensitive to the amplitude of the signal provided thereto. That is, the coefficients selected for the loop filter **1201** must be appropriate for the amplitude of the signal provided to the loop filter **1201** in order to assure rapid acquisition of the signal input to the phase locked loop **1200**.

In order to assure that the amplitude of the signal input to the loop filter **1201** is within a desired range, i.e., is appropriate for the coefficients selected for the loop filter **2201**, a sensor and amplitude control **1202** monitors the amplitude of the voltage input to phase detector **1203** and modifies, via mixer or multiplier **1204**, the amplitude of the signal input to loop filter **1201** which provide an output to NCO **1205**. Thus, when the amplitude of the signal input to the phase detector **1203** is too low, then the sensor and amplitude control **1202** increases the amplitude of the signal

input to loop filter **1201** such that the amplitude of the signal input to loop filter **1201** is within a desired range which is appropriate for the coefficients thereof. Similarly, when the sensor and amplitude control **1202** senses that the amplitude of the signal input to the phase detector **1203** is too high, then the sensor and amplitude control **1202** reduces the amplitude of the signal input to the loop filter **1201**, such that the amplitude of the signal input to the loop filter **1201** is within the desired range for the coefficients of the loop filter **1201**.

Referring now to FIG. **24**, a timing recovery accelerator enhances the speed at which the binary preamble is acquired by assuring that the samples taken by the sampling circuit are taken at a time which assures reliable detection of the amplitude of the binary signal of the preamble.

According to contemporary practice, a single clock signal **1300** (waveform A) is used to clock the sample circuit such that the sample circuit samples the binary preamble on the rising edge **1301** of the clock signal **1300**, for example. However, in those instances when the rising edge **1301** occurs near the zero or transition point **1310** of the binary pattern **1111** preamble **1109**, then the amplitude of the binary pattern **1111** may not provide high enough phase detector gain to facilitate reliable amplitude detection thereof.

According to contemporary practice, when this occurs the clock for the sample circuit is shifted in phase until reliable detection of the amplitude of the binary preamble occurs. However, as those skilled in the art will appreciate, such shifting of the phase of the clock for the sample circuit is undesirably time consuming and thus, undesirably increases the acquisition time of the binary preamble.

The present invention uses two offset symbol sampling clocks **1302***a* and **1302***b* (waveform B). Both of the offset symbol sampling clocks **1302***a* and **1302***b* effect sampling by the sample circuit on the rising edges **1303***a* and **1303***b*, thereof respectively. The two offset symbol sampling clocks **1302***a* and **1302***b* are out-of-phase with one another, such as by 180 degrees. Therefore, at least one of the two offset symbol sampling clocks **1302***a* and **1302***b* must have a rising edge **1303***a*, **1303***b* which occurs when the amplitude of the binary preamble **1111** is near its maximum and can therefore be reliably detected.

According to the present invention, that offset symbol sampling clock which provides samples having the highest absolute value (to account for the negative voltage peaks) at the beginning of each burst (FIG. **24**) is selected to provide a clock for the sample circuit. As those skilled in the art will appreciate, by utilizing two offset symbol sampling clocks and selecting that offset symbol sampling clock which provides the highest absolute value, the need to vary the phase of the symbol clock for the sampling circuit is eliminated and the speed at which acquisition is performed is substantially enhanced.

Thus, the present invention includes a receiver architecture having two resampler circuits. One is an open-loop resampler for the symbol clock frequency resampling and the other is a closed-loop resampler for symbol clock phase acquisition.

It is worthwhile to point out that two different power estimation processes may be performed by the burst receiver. The burst receiver may perform a narrow band power estimation and/or a wide band power estimation.

The narrow band power estimation relates to a particular symbol rate and is utilized to measure the narrow band channel noise power level, as a part of the channel estimate which is used to determine channel quality.

The wide band power estimate relates to the overall upstream band, typically from 5–42 MHz and may be used to determine the analog front-end gain setting. Generally, it is desired that the analog front-end gain setting be configured to handle up to 50 dB of dynamic range at the upstream cable plant.

Referring now to FIG. **25**B, a wide band RMS power estimator includes analog-to-digital converter **1350** which receives a wide band input. The analog-to-digital converter **1350** provides an output to absolute value block **1351** which takes the absolute value of the input thereto and provides an output to leaky integrator **1352** which integrates the signal and provides an output to an enable gate **1353**.

The wide band RMS power estimator provides a coarse estimation which is used for initial variable gain amplifier setting.

A narrow band RMS power estimator is typically included after the Nyquist filters and provides an average power of the I and Q channels. According to an exemplary embodiment, the narrow band RMS power estimator has a 2-byte output and a relatively large time constant, of the order of tens of thousands of symbols. Noise channel power estimation in an idle channel for spectrum management typically has a deviation of approximately 2 to 3 dB.

Robust Techniques for Optimal Upstream Communication

A plurality of upstream channels are periodically monitored for at least one parameter which is indicative of channel quality. A first modulation method is used for each upstream channel for which the monitored parameter(s) indicate that channel quality is above a predetermined threshold value and a second modulation method is used for each upstream channel for which the monitored parameter(s) indicate that channel quality is below the predetermined threshold value. The first modulation method utilizes a larger constellation size than the second modulation method, such that a higher data rate is achieved when the channel quality is good enough to support the higher data rate.

Further, the present invention provides in another aspect a method and apparatus for optimizing the efficiency of upstream data communications by dividing an upstream spectrum into a plurality of upstream channels, wherein each upstream channel has a bandwidth of less than or equal to approximately 0.5 MHz. The upstream channels are periodically monitored for at least one parameter which is indicative of the quality of each monitored upstream channel. Communications are moved from a used channel an unused channel when the monitored parameter(s) indicate that the quality of the used channel is below a predetermined threshold. In this manner, noisy channels tend to be avoided and communications occur on higher quality channels which are capable of supporting higher data rates. The present invention in another aspect provides a method and apparatus for tending to optimize upstream communication efficiency wherein a communications channel having upper and lower frequency bounds is defined in an attempt to determine an optimal bandwidth of the channel given constraints imposed by the presence of adjacent channels, as well as constraints imposed by narrowband interference. Data rate is thus enhanced by varying the symbol rate of communications performed via the channel in a near-continuous manner, i.e., by varying the upper and/or lower frequency bounds, so as to enhance the bandwidth and thereby enhance the efficiency with which the available frequency spectrum is utilized.

Thus, according to the present invention, the data rate of the upstream channel tends to be optimized, so as to enhance the data communication efficiency of the upstream channel.

The present invention provides enhanced upstream data rates by utilizing a constellation which is efficient in view of transmission medium conditions, by providing fine frequency agility based upon channel quality monitoring so as to enhance the effectiveness with which the limited bandwidth of the upstream channel is utilized, and by providing nearly continuous symbol rate switching so as to facilitate the usage of an enhanced symbol rate which is compatible with line conditions.

The method and apparatus for communicating information from a plurality of cable modems to a cable modem termination system are illustrated in FIGS. **27** and **29**–**32**, which depict certain exemplary embodiments thereof. FIGS. **26** and **28** depict prior art contemporary communications circuitry.

Referring now to FIG. **26**, according to contemporary practice a cable modem termination system includes a plurality of demodulators **700***a*–**700***n* which receive modulated data which is input from a plurality of cable modems via a common transmission medium. The demodulators **700***a*–**700***n* provide a demodulated data output for the frequency division multiplexed (FDM) upstream channels via which data is transmitted from the plurality of cable modems to the cable modem termination system (CMTS). The cable modems communicate with the cable modem termination system via time division multiple access (TDMA), wherein a plurality of cable modems communicate with each demodulator **700***a*–**700***n* and wherein the cable modems associated with each demodulator **700***a*–**700***n* are distinguished from those associated with a different demodulator via frequency division multiplexing (FDM).

Referring now to FIG. **27**, according to the present invention monitoring circuit **336** of the cable modem system **10** monitors the ability of each FDM channel to reliably transmit data at a desired data rate. That is, a parameter which is indicative of channel quality is periodically monitored so as to determine the ability of the channel to facilitate upstream data communications. The channel monitoring function is, for example, incorporated into each individual burst receiver, of which there are typically eight per cable modem termination system. The averaging and statistic gathering function is may be common to all channels, and thus may reside separate from the individual burst receivers.

As used herein, channel quality is defined as the ability of a channel to transmit data reliably thereon, such that higher quality channels transmit data reliably at a higher data rate than lower quality channels.

When a quality of the channel, such as signal-to-noise (SNR) is determined to be above a predetermined threshold value, then a first modulation method is utilized for that upstream channel. When the quality of a channel is determined to be less than that of the predetermined threshold value, then a second modulation method is utilized. The first modulation method is capable of providing a higher data rate than the second modulation method. According to the illustrated embodiment of the present invention, first modulation method has a larger constellation size than the second modulation method. According to the exemplary embodiment of the present invention, the first modulation method encompasses 16-QAM and the second modulation method encompasses QPSK (4-QAM). Thus, according to the present invention, a constellation size is selected which is dependent upon transmission medium characteristics, such that the data rate of communications on each channel tends to be enhanced.

Alternatively, more than two different modulation methods may be utilized. Thus, a plurality of different modulation methods, wherein each individual modulation method is generally better suited for a different range of channel quality, may be utilized. In this manner, the efficiency of data communications is yet further enhanced.

The modulation method utilized for each upstream channel is communicated from the monitoring circuit **336** to each demodulator **700***a*–**700***n* of the cable modem termination system and is also inserted into the downstream message flow such that the modulation method is communicated to each cable modem **12**, thereby facilitating modulation by each cable modem with the desired modulation method. Thus, each cable modem **12** includes a demodulator **715** for demodulating downstream data transmissions from the cable modem termination system **10** and also includes a modulator **716** for modulating upstream data transmissions. A control circuit **717** of the cable modem **12** controls the modulation method utilized by the modulator **716** and also controls the physical layer parameters such as forward error correcting gain and guard time.

According to one exemplary embodiment of the present invention, the step of periodically monitoring a plurality of channels contemplates periodically monitoring a signal-to-noise ratio for each of the monitored channels. The signal-to-noise ratios are monitored over a plurality of separate communications bursts and an average of the signal-to-noise ratios is formed from the individual measurements. This average is compared to the predetermined threshold value so as to determine whether or not a change is to be made to the modulation method.

In an exemplary aspect of the invention, the predetermined signal-to-noise ratio threshold value is approximately 20 dB. Thus, if the signal-to-noise ratio is equal to or greater than 20 dB, then the first modulation method is utilized and when the signal-to-noise ratio is less than 20 dB, then the second modulation method is utilized.

In particular, the monitoring circuit **336** defines a portion of the cable modem termination system. Alternatively, the monitoring circuit **336** may be separate from the cable modem termination system, but might be located generally proximate thereto, such that an accurate assessment of each channel's ability to transmit data may be performed.

According to another exemplary embodiment of the present invention, the step of periodically monitoring a plurality of channels contemplates periodically monitoring channel noise power. Thus, channel noise power may be monitored and compared to a predetermined threshold value so as to determine which modulation method is to be utilized. Channel noise may be monitored in addition to signal-to-noise ratio (SNR) and/or any other desired parameter which is indicative of channel quality, such as channel statistics. Thus, any desired combination of parameters indicative of channel quality may be utilized according to the method of the present invention.

According to yet another exemplary embodiment of the present invention, the step of periodically monitoring a plurality of channels contemplates periodically monitoring channel statistics for each of the monitored upstream channels. Examples of the statistics which may be monitored for each upstream channel include the number of packets undetected, the number of packets with corrected errors, the number of packets with uncorrected errors, the number of forward error correction blocks with corrected errors, and the number of forward error correction blocks with uncorrected errors. Combinations of these criteria and/or other desired criteria may similarly be monitored. Thus, it will be appreciated that such channel statistics provide an indication of the quality of an upstream channel which may be utilized

to determine which modulation method may be utilized to reliably and efficiently transmit data upon that channel.

Optionally, at least one physical layer parameter of a channel may be changed in response to a change in quality of the channel. For example, forward error correcting gain and/or the guard time associated with a channel may be changed in response to a change in the quality of the channel. This change in the physical layer parameter may be either in addition to or separate from any change in modulation methods.

Although periodic monitoring of one or more parameters indicative of channel quality is performed according to the exemplary embodiment of the present invention, those skilled in the art will appreciate that continuous monitoring at such parameters may alternatively be utilized, if desired.

Referring now to FIG. **28**, a prior art method for receiving modulated data at a cable modem termination system from a transmission medium, such as a coaxial cable, and for converting that received modulated data into digital data suitable for computer use includes demodulating the modulated data via an upstream burst receiver **333** and providing the demodulated data to medium access control (MAC) **213**. Medium access control (MAC) **13** controls access of the cable modem termination system to the transmission medium and provides a digital data output representative of a message transmitted from a cable modem.

The upstream burst receiver is configured so as to be capable of demodulating both QPSK and 16-QAM modulation formats within a TDMA frame. According to contemporary methodology, the upstream burst receiver **333** is configured so as to demodulate modulated data from the transmission medium according to a single, predetermined modulation method. The predetermined modulation method must be selected such that it provides reliable data transmission for a wide range of transmission medium conditions. Of course, this necessitates that a modulation technique which provides reliable data transmission even under the worst expected transmission medium conditions must be utilized. As those skilled in the art will appreciate, such a modulation technique, QPSK for example, does not provide the enhanced data rates which may be possible when better medium conditions are present. That is, when only a single modulation method is utilized, then data rate must typically be sacrificed in order to provide the desired reliability.

Thus, in order to limit interruptions to upstream communications, cable modem systems typically utilize an upstream modulation method which is compatible with the lowest expected channel quality. However, as those skilled in the art will appreciate, such worst case modulation methods (QPSK, for example) are inherently inefficient at higher channel qualities. The modulation methods used for lower channel qualities provide reduced bit rates, while the modulation methodology suitable for higher channel qualities provide higher bit rates.

It is important to recognize that upstream data communications are characterized by a plurality of different time division multiplexed channels, wherein each individual channel originates from a different cable modem or a different group of cable modems. Because the transmission path between the cable modem termination system and each individual cable modem is not identical (even though a common coaxial cable may be utilized along some portion of the path), variations in channel quality occur. Thus, a wide variation in channel quality among channels, i.e., cable modems, is typical. These variations may occur because, for example, some of the cable modems and/or their links to the common coaxial cable are located proximate noise sources.

Referring now to FIG. **29**, according to the present invention the cable modem termination system includes a spectrum management/allocation circuit **340** which at least periodically monitors the plurality of upstream channels for at least one parameter which is indicative of channel quality. For example, spectrum management/allocation circuit **340** may receive signal-to-noise ratio or channel power values from the upstream burst receiver **333**. Alternatively, the spectrum management/allocation circuit **340** receives packet/FEC status from an upstream MAC/PHY channel statistics circuit **334**. The upstream MAC/PHY channel statistics circuit **334** receives the output of the upstream burst receiver prior to the output of the upstream burst receiver being provided to the medium access control **213** and the upstream MAC/PHY channel statistic circuit **334** calculates the packet/FEC statistics, which is then provided to spectrum management/allocation circuit **340**.

Any desired combination of signal-to-noise ratio, channel power, packet statistics and/or forward error correction statistics may be utilized as the parameter which is indicative of channel quality.

Such monitoring of the signal-to-noise (SNR), channel power, and/or packet/FEC statistics facilitates the determination of which modulation method, e.g., QPSK or 16-QAM, is to be utilized as long as the quality of the channel is deemed to be sufficiently good to facilitate the use of such modulation methods. When the quality of the channel is insufficient to facilitate the use of the smallest constellation size, i.e., QPSK, then the spectral allocation of the channel is changed, as discussed in detail below.

Optional averaging circuit **346** averages a plurality of signal-to-noise (SNR) or channel power measurements to compensate for short term fluctuations therein.

When a change in modulation method is indicated, then the new modulation method is transmitted from a switch circuit **345** of the spectrum management/allocation circuit **340** to the upstream burst receiver **333** and is also transmitted to the affected cable modem via downstream message flow, as mentioned above.

When the quality of a channel is determined to be sufficiently poor (such that even QPSK will not provide reliable data transmission), then that channel may be moved to a different frequency allocation. When this occurs, the new upstream channel frequency is transmitted to the upstream burst receiver **333** and is also transmitted to the affected cable modem via downstream message flow.

A bandwidth selection circuit **348** of the spectrum management/allocation circuit **340** thus facilitates the implementation of fine frequency agility and the switch **345**. The bandwidth selection circuit **348** determines the bandwidth of each downstream channel and the switch **345** effects switching to the desired channel by the upstream burst receiver **333**. The upstream spectrum is divided into a plurality of upstream channels and wherein each channel is characterized as having a bandwidth which is less than or equal to 0.5 MHz.

According to the fine frequency agility aspect of the present invention, the spectrum management/allocation circuit **340** monitors the upstream channels for at least one parameter which is indicative of the quality of each monitored upstream channel and moves communications from a used channel to an unused channel when the monitored parameter indicates that the quality of the used channel is below a predetermined threshold value.

Thus, according to the present invention, 16-QAM is the baseline or default modulation method and QPSK is the fall-back modulation method, which is utilized only when

channel quality is insufficient to support upstream data transmission utilizing 16-QAM. Channel reallocation is the fall-back method used when channel quality is insufficient for the use of QPSK.

The use of 16-QAM enhances channel bandwidth efficiency by a factor of 2, typically from approximately 1.6 bits/Hz to approximately 3.2 bits/Hz, while providing approximately 25 percent excess bandwidth. For example, the use of 16-QAM provides up to 20.48 Mbps at 5.12 Mbaud.

However, it is important to appreciate that the detection of 16-QAM is much more difficult than the detection of QPSK, since the demodulation is amplitude sensitive, as well as phase sensitive when utilizing 16-QAM, whereas demodulation is only phase sensitive when utilizing QPSK.

It is expected that the above discussed combination of variable constellation size and fine frequency agility, i.e., dynamic channel allocation, will enhance channel bandwidth efficiency substantially.

It is important to understand that the upstream bandwidth in a hybrid fiber/coaxial (HFC) network is a scarce resource. The bandwidth itself is comparatively small (approximately 37 MHz as compared to the much greater bandwidth of approximately 814 MHz for the downstream band). The upstream band is shared by a plurality of cable modems and may be shared by other services, such as cable telephony, as well. Further, channel impairment such as ingress noise make burst transmission difficult.

Thus, the use of spectrum management according to the present invention facilitates reconfiguration of radio frequency (RF) channels in a manner such that the RF channels are not impaired by ingress or the like and also are not utilized by other services. When channel impairments such as ingress noise do occur, the channel can be reconfigured or moved to an unaffected radio frequency or channel.

According to the present invention, on-going channel monitoring, based upon the use of packet-based statistics and/or signal-to-noise ratio (SNR) and/or channel noise power is performed by the upstream receiver or cable modem termination system. By performing such monitoring at the cable modem termination system, spectrum analysis is provided at a single location and the need for an expensive, external spectrum management unit is eliminated.

Examples of the types of statistical information which may be utilized by the spectrum management/allocation circuit **340** to determine whether channel quality is sufficient to support 16-QAM, sufficient to support QPSK, or channel quality is insufficient to support either 16-QAM or QPSK and the channel must therefore be moved to a different spectral allocation, e.g., frequency band are provided below:

Statistics
Number of packets (total)
Number of packets undetected (no unique word)
Number of packets with corrected errors
Number of packets with uncorrectable errors
Number of FEC blocks (total)
Number of FEC blocks with corrected errors
Number of FEC blocks with uncorrectable errors

Referring now to FIG. **30**, upstream channel quality information can also be used to facilitate the changing of physical layer parameters in real time. FIG. **30** shows Reed Solomon coding gain for various T's for 16-QAM where K=64 bytes. It is clear that as coding gain increases (increasing T), the probability of incurring a data transmission error P(e) decreases for any given signal-to-noise ratio.

The ability to change physical layer parameters in real time allows a given channel to be optimized when the channel quality is not low enough so as to require either a change in modulation method or to necessitate that the channel be moved. Thus, according to the present invention, forward error correction (FEC) coding gain is increased and/or longer guard times are provided so as to facilitate reliable data transmission on such channels. Of course, it is understood that as the number of forward error correcting parity bytes is increased, coding gain is correspondingly increased for a given size of the information bytes.

Referring now to FIG. **31**, the upstream transmitter of each cable modem and the burst receiver of the cable modem termination system utilize fine frequency agility so as to enhance the overall data throughput of the upstream band. Fine frequency agility includes both channel reallocation (so as to avoid channels having poor quality) and the definition of channels with a fine frequency resolution (so as to enhance the efficiency with which the frequency spectrum is divided among channels).

Thus, according to the present invention, fine frequency agility facilitates the definition of channels in the upstream band with a resolution of a few Hz. According to the present invention, upstream channels are characteristically defined in increments of about 1.0 Hz. Such fine tuning capability is particularly beneficial in the low frequency portion of the upstream band, where narrowband ingress is frequently present.

The use of such fine frequency agility facilitates the precise definition of upstream channels such that the usable upstream bandwidth is enhanced. That is, upstream channels can be defined such that the bandwidth of each upstream channel is as large as possible without including those portions of the upstream frequency spectrum which include narrowband interference. Thus, such fine tuning of the available spectrum mitigates waste due to unused, but otherwise good, i.e., not noisy, bandwidth proximate narrowband ingress. Such waste inherently results from the use of coarser spectrum division.

The ability to define upstream channels in this manner is substantially dependent upon the resolution with which the channels may be defined. Thus, the finer the resolution for defining the channels, the more readily such channels may be defined in a manner which optimizes the bandwidth (by mitigating waste of the available spectrum) thereof while still excluding undesirable narrowband interference.

Further, the carrier frequency may be fine tuned so as to avoid such interference in a non-uniform fashion. That is, each individual channel in the upstream band need not have the same bandwidth. Rather, non-uniform bandwidths may be utilized so as to tend to optimize the overall upstream data throughput.

It is important to note that the existing DOCSIS/IEEE specification only facilitates the allocation of upstream symbol rates (which are proportional to the upstream channel bandwidths) according to powers-of-two. That is, each greater symbol rate is, according to DOCSIS/IEEE specifications, twice that of the preceding symbol rate. Thus, the DOCSIS/IEEE specifications do not facilitate enhancement of overall data throughput, as does the present invention. According to the present invention, symbol rates, e.g., bandwidths, may be varied in a nearly continuous manner, e.g., in 1.0 Hz increments. The ability to change symbol rates in such a near-continuous manner is a direct result of

such fine frequency agility, wherein the bandwidth of each upstream channel can be defined to a resolution of a few Hz.

The ability to vary the upstream symbol rate according to other than powers of two is particularly important where multiple data rates, such as those frequently required by modem applications, are not themselves defined in powers of two.

Further, in the upstream band, where undesirable ingress in a channel frequently inhibits uniform channelization, being able to vary the data rate in a generally arbitrary manner allows data carrier frequencies to be positioned in between two narrowband interferences in a manner which tends to optimize the bandwidth thereof, so as to enhance overall data throughput of the upstream band.

An example of variable symbol rates between 100 kBaud to 5.12 Mbaud which are supported by the upstream channel is provided below:

Symbol Rate (kysm/sec.)	Channel Width (kHz, α = 25%)	QPSK Date Rate (kbits/sec.)	16-QAM Date Rate (kbits/sec.)
128	160	256	512
160	200	320	640
256	320	512	1,024
320	400	640	1,280
512	640	1,024	2,048
640	800	1,280	2,560
1,024	1,280	2,048	4,096
1,280	1,600	2,560	5,120
2,048	2,560	4,096	8,192
2,560	3,200	5,120	10,240
4,096	5,120	8,192	16,384
5,120	6,400	10,240	20,480

As further shown in FIG. **31**, a bad radio frequency (RF) channel **701** is moved to an unused portion **702** of the spectrum when the channel power, e.g., spectral density, of the bad channel exceeds a predetermined threshold level **703** or when any other monitored parameter indicates that channel quality is below a predetermined threshold. In this manner, channels are reallocated to portions of the spectrum having a higher quality and data throughput is enhanced.

The band, i.e., portion of the spectrum, to which such a channel is moved is the best channel available at that time. In this manner, channelization tends to utilize the best available channels and the data rates supported by each such best available channel tend to be maximized. Thus, the overall upstream data rate is substantially enhanced.

Alternatively, when a channel is moved away from a spectral location where the measured parameter which is indicative of channel quality indicates that the quality of the channel is below the predetermined threshold, then the new channel may be assigned by any desired method or even may be assigned arbitrarily, as long as the quality of the spectral location to which the channel is moved is above the predetermined threshold.

Referring now to FIG. **32**, dynamic channel allocation control flow starts at block **704**. The process continues for a predetermined evaluation time as shown by decision block **705**, wherein a loop is incurred until the predetermined evaluation time has been exceeded. The evaluation time is that time during which upstream channels are monitored, so as to determine whether or not they are suitable for continued and/or future use. The evaluation time may be determined empirically.

During the evaluation time, if the number of undetected packets exceeds a predetermined threshold, as shown by decision block **706**, then the signal-to-noise ratio is checked. If the signal-to-noise ratio is less than a predetermined threshold, then the symbol rate and constellation for a new, unused upstream channel is determined as shown in block **712** and a channel reallocation message is sent to all cable modems in the frequency channel as shown in block **714**.

If the signal-to-noise ratio is not less than the threshold, then the modulation for the upstream channel is changed to QPSK as shown in block **711**.

Similarly, when the number of uncorrectable packets exceeds a predetermined threshold as shown in decision block **707**, then the signal-to-noise ratio is compared to a predetermined threshold as shown in decision block **710** and symbol rate and constellation for a new upstream channel is determined as shown in block **712** when the signal-to-noise ratio is less than the predetermined threshold and the channel modulation method is changed to QPSK when the signal-to-noise ratio is not greater than the predetermined threshold, as shown in block **710**.

When the signal-to-noise ratio is less than a predetermined threshold as shown in decision block **708**, then the number of corrected packets is checked. When the signal-to-noise ratio is not greater than the predetermined threshold, then the process repeats. When the number of corrected packets is greater than a predetermined threshold as shown in decision block **709**, then the signal-to-noise ratio is checked with respect to the predetermined threshold as shown in decision block **710**. When the number of corrected packets is not greater than the predetermined threshold, as shown in decision block **709**, then the process repeats.

A spectrum analyzer **713** may be used to define the next available channel. The next available channel is that unused channel which is best suited for upstream communications. The local spectrum analyzer **713** may determine which unused channel is best suited for next use by looking at the signal, or the power thereof, which is present upon the used channel. Of course, that unused channel having the lowest signal or power is most likely best suited for use next.

Referring now to FIG. **33**, CMTS dynamic channel allocation control flow is shown. Dynamic channel allocation starts **660**, then waits **661** while two independent flow paths execute. According to the left flow path, a determination is made if the channel being monitored is bad, as shown in decision block **662**. If the channel is not bad, then the process returns to the wait **661** state while right control path continues to execute. If the channel is bad, then the constellation is set to QPSK as shown in block **663** and ingress cancellation is applied on a per channel basis as shown in block **664**. Intersymbol interference (ISI) mitigation is applied on a per user basis as shown in block **665**.

If the signal-to-noise ratio is greater than a predetermined QPSK threshold, as indicated in decision block **666**, then a final constellation is assigned as shown in block **671** and the left control path returns to the wait state **661**.

If the signal-to-noise ratio is not greater than the QPSK threshold, then the next available channel is provided, as shown in decision block **667**. The spectrum manager **668** controls this function. As shown by block **670**, the next available channel is assigned as the new channel for upstream transmission. If no next channel is available, then a new symbol rate is assigned as shown in block **669**.

As shown in the right control path, after the wait state **661** is entered, then each channel is checked on a per user basis as shown in block **672**. If each channel, on a per user basis, is not found to be bad, then the wait state **661** is re-entered.

If a channel is found to be bad on a per user basis, then ISI mitigation is employed on a per user basis as shown in block **673**.

The channel quality evaluation criteria include the use of undetected packets as indicating a bad SNR, uncorrectable packets as indicating a marginal SNR and corrected packets as indicating an acceptable SNR. The equalizer acquisition time is configured such that ISI equalization is performed in less than 100 symbols and the ingress canceller is effective in 100 to 1,000 symbols.

It is understood that the exemplary method and apparatus described herein and shown in the drawings represents only presently illustrative embodiments of the invention. Indeed, various modifications and additions may be made to such embodiments without departing from the spirit and scope of the invention. For example, those skilled in the art will appreciate that various other measures of channel quality may be utilized for determining which modulation method is to be utilized upon a given channel and to determine whether or not the spectral allocation of the channel should be changed. For example, the reliability with which various different types of messages are received may be measured so as to provide such an indication of channel quality. Further, various different modulation methods, other than QPSK and 16-QAM, may be utilized. For example, the present invention may be utilized with 32-QAM, 64-QAM and 256-QAM. Thus, these and other modifications and additions may be obvious to those skilled in the art and may be implemented to adapt the present invention for use in a variety of different applications.

Cable Modem Termination System Upstream MAC/PHY Interface

Referring now to FIG. **34**, the present invention generally includes an interface between the physical layer burst receiver **332** and the MAC **213** of a cable modem termination system **10** which is in communication with a plurality of cable modems **12**. The interface between the burst receiver **332** and the MAC **213** includes a data interface for communicating data from the burst receiver **332** to the MAC **213**, an error information interface for communicating error information from the burst receiver **332** to the MAC **213** and a slot timing and data type interface for communicating information from the MAC **213** to the burst receiver **332**, as described in detail.

Referring now to FIG. **36**, the contents of a MAP protocol data unit (PDU) **487** are shown. The MAP PDU **487**, which is transmitted on the downstream channel by the cable modem termination system **10** (FIG. **27**) to all of the cable modems **12** on a given frequency channel, contains the time slot allocations for at least some of the cable modems **12** which have previously sent a request to transmit one or more data packets to the cable modem termination system **10**. When the channel bandwidth is sufficient, in light of the number of such requests received by the cable modem termination system **10**, then the cable modem termination system **10** allocates a time slot for each such requesting cable modem **12**.

Further, the MAP PDU **487** at least occasionally defines at least one request contention region **486** and generally also contains a plurality of cable modem transmit opportunities **488** within the upstream channel **491**. A maintenance region **490** may also be defined by the MAP PDU **487** within the upstream channel **491**, as discussed in detail below.

The request contention region **486** includes at least one time area within which the cable modems **12** transmit their requests to transmit data packets to the cable modem termination system **10**. Each of the cable modem transmit opportunities **488** define a time slot within which a designated cable modem **12** is permitted to transmit the data packet for which it previously sent a request to the cable modem termination system **10**.

Additionally, one or more optional transmit contention regions (not shown) may be provided wherein cable modems **12** may contend for the opportunity to transmit data therein. Such transmit contention regions are provided when sufficient bandwidth is left over after the MAP PDU **487** has allocated transmit opportunities **488** to all of those cable modems **12** which have requested a time slot allocation. Thus, transmit contention regions are generally provided when upstream data flow is comparatively light.

The upstream channel **491**, is divided into a plurality of time intervals **110**, each of which may optionally be further subdivided into a plurality of sub-intervals **489**. The upstream channel **491** is thus partitioned so as to facilitate the definition of time slots, such that each of a plurality of cable modems **12** may transmit data packets to the cable modem termination system **10** without interfering with one another, e.g., without having data collisions due to data packets being transmitted at the same time.

Thus, the use of a MAP **487** PDU facilitates the definition of time slots **92**. Each time slot **92** may be used for any desired predetermined purpose, e.g., as a request contention region **486** or a transmit opportunity **488**. Each time slot **92**, as defined by a MAP PDU **487**, includes a plurality of time intervals **110** and may additionally comprise one or more sub-intervals **489** in addition to the interval(s) **110**. The number of intervals **110** and sub-intervals **489** contained within a time slot **92** depends upon the contents of the MAP PDU **487** which defines the time slot **92**. The duration of each interval **110** and sub-interval **489** may be defined as desired. Optionally, each sub-interval **489** is approximately equal to a media access control (MAC) timing interval. Each MAP PDU **487** defines a frame and each frame defines a plurality of slots **92**.

The beginning of each sub-interval **489** is aligned in time with the beginning of each interval **110** and each interval **110** typically contains an integral number of sub-intervals **489**.

Typically, the request contention region **486** and each cable modem transmit opportunity **488** includes a plurality of integral time intervals **110**. However, the request contention region **486** and/or the cable modem transmit opportunity **488** may alternatively include any desired combination of intervals **110** and sub-intervals **489**.

Thus, according to the present invention, each request contention region **486** may be utilized by a plurality of the cable modems **12** to request one or more time slot allocations which facilitate the transmission of one or more data packets during the subsequently allocated transmit opportunity **488** of cable modem **12**.

Each data packet may contain only data, although an extended data packet may be defined to include both data and a preamble. The preamble is typically stripped from an extended packet by the cable modem termination system **10** and the data in the packet is then processed by a central processing unit of the cable modem termination system **10**.

The duration of the request contention region **486** is typically variable, such that it may be sized to accommodate the number of cable modems **12** expected to request time slot allocations from the cable modem termination system **10**. The duration of the request contention region **486** may thus be determined by the number of requests transmitted by cable modems as based upon prior experience.

The allocation of time slots **92** defined by cable modem transmit opportunities **488** may optionally be defined, at least in part, on the basis of priorities established by the cable modem termination system **10** for different cable modems **12**. For example, priorities may be established for individual cable modems **12** on the basis of an election made by the subscribers, which is typically dependent upon the type of service desired. Thus, a subscriber may elect to have either a premium (high priority) service or a regular (low priority) service.

Alternatively, priorities may be established by the cable modem termination system **10** for the cable modems based upon size and number of cable modem transmit opportunities **488** historically requested by the subscribers. Thus, a cable modem that typically requires a large number of time intervals **110** may be defined as a high priority user, and thus given priority in the allocation of time slots within a cable modem transmit opportunity **488**, based upon the assumption that such large usage is indicative of a continuing need for such priority, e.g., is indicative that the subscriber is utilizing cable television, pay-per-view or the like. Alternatively, the cable modem termination system may assign such priorities based upon the type of service being provided to each cable modem. Thus, for example, when cable television or pay-per-view is being provided to a cable modem, then the priority of that cable modem may be increased, so as to assure uninterrupted viewing. The priority associated with each cable modem **12** may determine both the size of time slots allocated thereto and the order in which such allocations are performed. Those allocations performed earlier in the allocation process are more likely to be completely filled than those allocations performed later in the allocation process. Indeed, allocations performed later in the allocation process may go unfilled, when the bandwidth of the channel is not sufficient to facilitate allocation of time slots for all requesting cable modems **12**.

Time slots which define the maintenance region **490** are optionally provided in a MAP **487**. Such maintenance regions **490** may be utilized, for example, to facilitate the synchronization of the clocks of the cable modems with the clock of the cable modem termination system. Such synchronization is necessary in order to assure that each cable modem **12** transmits only within its allocated time slots, as defined by each cable modem's transmit opportunity **488**.

The request contention region **486**, cable modem transmit opportunity **488**, and maintenance region **490** typically begin at the beginning of an interval **110** and end at the end of an interval **110**. However, each request contention region **486**, cable modem transmit opportunity **488**, and maintenance region **490** may begin and end anywhere as desired.

Thus, according to the present invention, variable duration request contention regions **486**, cable modem transmit opportunities **488** and maintenance regions **490** are provided. Such variable duration request contention regions **486**, transmit opportunities **488**, and maintenance regions **490** facilitate flexible operation of the cable modem system and enhance the efficiency of data communications on the cable modem system by tending to mitigate wasted channel capacity.

The current MAP **170** is transmitted in the downstream channel **485** after transmission of a previous MAP **91***a* and before any subsequent MAP **91***b*. Data, such as data packets associated with web pages, e-mail, cable television, pay-per-view television, digital telephony, etc. are transmitted between adjacent MAPs **91***a*, **170**, **91***b*. The contents of each cable modem transmit opportunity **488** optionally includes data and a preamble. The data includes at least a portion of the data packet for which a request to transmit was sent to the cable modem termination system **10**. The preamble typically contains information representative of the identification of the cable modem **12** from which the data was transmitted, as well as any other desired information.

The data and the preamble do not have to occupy the full time interval of the cable transmit opportunity **488**. Guard bands **209** (FIG. **68**) are optionally provided at the beginning and end of each slot, so as to decrease the precision with which time synchronization between the cable modem termination system and each cable modem must be performed. Thus, by providing such guard bands, some leeway is provided in the transmit time during which each cable modem inserts its data packet into the upstream channel **191**.

Referring now to FIG. **37**, the interrelationship of the MAC frame **179** of the MAC layer and the frames **128**, each of which contain at least one, generally a plurality, of data **122** and forward error correction (FEC) **494** portions which, taken together, occupy an allocated time slot **92** (FIG. **36**) which defines a request contention region **486**.

Each MAC frame **179** further includes, at the physical layer, PHY overhead portion **120**. The PHY overhead portion **120** contains physical layer overhead information.

Additional PHY overhead portion **126** generally follows the forward error correction (FEC) portion **494** and optionally includes a guard band **209** which reduces the accuracy with which synchronization of the cable modems must be performed. That is, the guard band of the physical overhead portion **126** provides a tolerance, such that the cable modems **12** do not have to transmit precisely within their allocated time slots **92**.

Each MAC frame **179** includes at least one PHY overhead portion **120**, one data portion **122** and forward error correcting (FEC) portion **494**. Optionally, each MAC frame **179** may include a plurality of data portions **122** and corresponding forward error correcting (FEC) portions **494**, if desired.

Referring now to FIG. **38**, a block diagram shows how the cable modem termination system **10** at headend **1012** processes the priorities of requests made by the cable modems **12** to send data to the cable modem termination system **10**. As indicated by block **130**, the cable modem termination system **10** sends an initial or current MAP **170** (FIG. **36**) based upon data previously collected from the cable modems **12** during the sending of a MAP **91***a* previous to the current MAP **170**. At the same time, the cable modem termination system **10** sets the time for the MAP **91***b* subsequent to the current MAP **170**. The time for the subsequent MAP **91***b* is based upon the time for the sending of the current MAP **170** and is set for a time after the sending of the current MAP.

As indicated by block **132**, the cable modem termination system **10** collects collision statistics for the subsequent MAP **91***b* while the initial or current MAP **170** is being processed. These statistics indicate collisions in time between bursts from different cable modems **12**. When the current time becomes greater than the subsequent MAP time, as indicated in block **131**, then the MAP building process begins as indicated in block **134**.

When an upstream request arrives as represented by a block **135**, the requests for sending data in the subsequent MAP **91***b* are then processed to determine if the requests are high priority bandwidth requests (block **136** or low priority bandwidth requests (block **137**). If the request is a high priority bandwidth request, the request is placed in a high priority bandwidth request queue as indicated by a block

138. If the request is a low priority bandwidth request, the request is placed in a low priority bandwidth request queue as indicated at block 139.

When a request is placed in either a high priority bandwidth request queue 138 or a low priority bandwidth request queue 139, a portion of the MAC, depicted as a line 140, provides a sequence for collecting collision statistics for the subsequent MAP 91*b*. Such a sequence is also provided when a request is processed and is found to be neither a high priority bandwidth request 136 nor a low priority bandwidth request 137.

Referring now to FIGS. 39 and 40, the construction of a frame is shown. As shown in block 143, requests are made by the cable modems 12 in a request contention region 486 (FIG. 36) of a first MAP for the grant or allocation by the cable modem termination system 10 to the subscribers of Information Elements (IE). An Information Element may be considered to be the same as a region. A maintenance opportunity is optionally provided as shown at block 144. Such maintenance opportunities may, for example, be used to synchronize the operation of the cable modem 12 with the operation of the cable modem termination system 10. As previously indicated, this maintenance opportunity may be provided only periodically.

A determination is then made at block 146 as to whether the high priority request queue is empty. If the answer is No with respect to the high priority request queue, a determination is then made at block 147 as to whether the frame length is less than a desired length. If the answer is Yes, the request of the subscriber to transmit data is granted and the frame length is incremented by the size of the data requested at block 148.

If the high priority request queue is empty, a determination is made at block 149 as to whether the low priority request queue is empty. If the answer is No, a determination is made at block 154 as to whether the frame length will be less than the desired length. If the answer is Yes with respect to the low priority request queue, the request of the cable modem 12 to transmit data to the cable modem termination system 10 is granted and the frame length is incremented by the size of the grant. This is indicated at block 156.

It may sometimes happen that the frame length will be at least equal to the desired length when the request with respect to the high priority request queue is introduced to the block 147. Under such circumstances, the request is not granted and a determination is then made as to whether the low priority request queue is empty. Similarly, if the frame length will be greater than the desired frame length when a request with respect to the low priority request queue is made, the request is not granted. An indication is accordingly provided on a line 157 when the high priority request queue and the low priority request queue are both empty or when the frame length will be at least as great as the desired length.

When the high priority request queue and the low priority request queue are both empty or when the frame length will be at least as great as the desired length upon the assumed grant of a request, a determination is made, as at block 158 (FIG. 40) as to whether the request queues are empty. This constitutes an additional check to make sure that the queues are empty. If the answer to such determination is No, this indicates that the frame length will be greater than the desired frame length upon the assumed grant of a request. Under such circumstances, a grant of a zero length is provided in the MAP 170 for each request in each queue. This zero length grant is provided so that the headend can notify the subscriber that the request has not been granted but was received by the headend. In effect, a zero length grant constitutes a deferral. The request was seen, i.e., not collided, but not granted yet. It will be granted in a subsequent MAP 91*b*.

If a determination is made as at block 158 that the request queues are empty, a determination is then made at block 162 as to whether the frame length will be less than the desired frame length. If the answer is Yes, the frame is padded to the desired length with data from a contention data region 168 (FIG. 42) in the frame, as indicated at block 164. The contention data region 168 constitutes an area of reduced priority in the frame. It provides for the transmission of data from the cable modems 12 to the cable modem termination system 10 via available slots in the frame where cable modems have not been previously assigned slots by the cable modem termination system 10. The contention data region does not require a grant by the cable modem termination system 10 of a request from a cable modem 12 as in the request contention data region 486 in FIG. 36. Since no grant from the cable modem termination system 10 is required, the contention data region 168 in FIG. 42 provides faster access to data for the subscriber than the request contention region 486. The contention data region 168 is described below in additional detail in connection with FIGS. 42 and 43.

Available slots in a frame are those that have not been assigned on the basis of requests from the cable modems 12. As indicated at block 185 in FIG. 40, the cable modem termination system 10 acknowledges to the cable modem 12 that the cable modem termination system 10 has received data from the contention data region (FIG. 41) in the frame. The cable modem termination system 10 provides this acknowledgment because the cable modem 12 would not otherwise know that such data was not involved in a data collision and has, indeed, has been received from the contention data region 168.

Referring now to FIGS. 41 and 42, a block diagram of that portion of the cable modem termination system 10 which receives requests from the cable modems 12 and which generates MAPs in response to those requests is shown.

The contention data region 168 in FIG. 42 is included in frame 179 defined by a MAP 170 (FIG. 36). The frame 179 in FIG. 42 may include a number of other regions. One region is indicated at 172 and is designated as contention requests region 486 in FIG. 36. It includes slots 181 designated as X in FIG. 42. In these slots 181, collisions between request data from different cable modems 12 have occurred. Other slots 183 in the contention request region 172 are designated as R. Valid uncollided request data is present in these slots. The contention request region 172 also illustratively includes an empty slot 175. None of the subscribers 14 has made a request in this empty slot 175.

A cable modem transmit opportunity region 176 (corresponding to the cable modem transmit opportunity region 488 in FIG. 36) may also be provided in the frame 179 adjacent the contention request area 172. As previously indicated, individual cable modems 12 are assigned slots in this area for data in accordance with their requests and with the priorities given by the cable modem termination system 10 to these requests. Optionally, the cable modem transmit opportunity region 176 may be considered as having two sub-regions. In a sub-region 178, slots are specified for individual subscribers on the basis of requests of a high priority. Slots are specified in an area 180 for individual subscribers on the basis of requests of a low priority.

The frame 179 may optionally also include a maintenance region 182. This corresponds to the maintenance region 490

in FIG. **36**. As previously described, the region **182** provides for a time coordination in the clock signals of the cable modem termination system **10** and the cable modems **12**. The frame **179** additionally may optionally include a region **184** in the contention data region **168** where a collision has occurred. Valid data is provided in an area **186** in the frame where no collision occurred. A blank or empty area **188** may exist at the end of the contention data region **168** where further data could be inserted, subject to potential collisions. It will be appreciated that the different regions in the frame **179**, and the sequence of these different regions, are illustrative only and that different regions and different sequences of regions may alternatively be provided.

The signals of the frame **179** from different cable modems **12***a*, **12***b*, **12***c*, **12***d*, etc. (FIG. **42**) are introduced in upstream data processing through upstream channel **191** (FIGS. **41** and **42**) to a TDMA demultiplexer **192** (FIG. **41**) in the cable modem termination system **10**. After demultiplexing, data in from the cable modems **12***a*, **12***b*, **12***c*, **12***d*, etc. pass from the demultiplexer **192** to a data interface **194**. The signals at the data interface **194** are processed in an Ethernet system (not shown) or the like. The operation of the MAP generator **198** is controlled by data requests from the individual cable modems **12***a*, **12***b*, **12***c*, **12***d*, etc. and by collision information which is indicative of the cable modems **12***a*, **12***b*, **12***c*, **12***d*, etc. attempts to insert data in the contention data region **168**. Thus, for example, a large number of collisions may indicate a need for a larger contention request region **172** in the subsequent MAP. Attempts to insert data in the contention data region **168** may, optionally, be utilized by the MAP generator **198** to increase the priority of any cable modem unsuccessfully attempting to transmit such data. The MAPs generated by the MAP generator **198** pass through the multiplexer **196** and are broadcast by the cable modem termination system **10** to the cable modems **12***a*, **12***b*, **12***c*, **12***d*.

A sample MAP **195** generated by the MAP generator **198** is generally indicated in FIG. **41**. The MAP **195** includes a region **189** where the requests of the cable modems **12** for Information Elements (IE) within which to transmit data are indicated. As previously indicated, an Information Element (IE) may be considered to be the same as a region. The MAP **195** also includes a region **193** where the cable modem termination system **10** has granted the requests of the subscribers for Information Elements to transmit data. The MAP **195** additionally includes a contention data region **208** where the cable modem termination system **10** has given the cable modems **12** the opportunity to transmit data in available spaces or slots without specifying the open spaces or slots where such transmission is to take place. An acknowledgment region **210** is also included in the MAP **195**. In this region, the cable modem termination system **10** acknowledges to the cable modem **12** that it has received data from the subscribers in the available slots in the contention data region **208**. As discussed above, the cable modem termination system **10** has to provide such acknowledgment because the cable modems **12** will not otherwise know that the cable modem termination system **10** has received the data from the cable modems **12** in the contention data region **208**.

After the ranging process has been performed so as to adjust the power level of at least one cable modem so as to normalize the power of a received transmission at the cable modem termination system, adjust the carrier frequency of the cable modem so as to enhance channelization in the frequency domain, and adjust slot timing of a transmission from the cable modem so as to compensate for propagation delays, data packets transmitted from the cable modem to the cable modem termination system may be acquired by the cable modem termination system.

As those skilled in the art will appreciate, contemporary cable modem termination systems include a burst receiver, a continuous transmitter and a medium access control (MAC) for controlling access of an external device, such as a computer, network, or other data serving device to the physical layer of the cable modem termination system.

In a contemporary cable modem termination system, the burst receiver merely communicates demodulated received data packets to the medium access control, which forwards the received data packets to an external device. Further communications occur between the burst receiver and the medium access control which enhance communications between a cable modem and the cable modem termination system.

More particularly, information is communicated from the MAC to the burst receiver which is representative of parameters of received time division multiple access data. According to one aspect of the present invention, the information representative of parameters of the received time division multiple access data is used by the burst receiver to facilitate processing of the received time division multiple access signal, as described in detail below.

According to another aspect of the present invention, time division multiple access communications are enhanced by communicating information from the burst receiver to the MAC. The information is representative of error conditions related to an upstream channel, as described in detail below.

More particularly, slot timing information and/or data-type information is communicated from the MAC to the burst receiver to facilitate processing of upstream data packets by the burst receiver. The slot timing information include information representative of a start time and a stop time of time division multiple access time slots. Thus, the slot timing information may include either start time and stop time, start time and duration or stop time and duration.

The slot timing and data-type information for each slot include a station or service identifier (SID) value which identifies a transmitter, e.g., cable modem, which is transmitting a data packet within the slot, the time at which the slot began and an interval usage code which defines a burst type of the data packet transmitted within the slot.

The data-type information include information representative of a QPSK/QAM modulation type which was used to modulate the upstream data packets. For example, the data-type information identifies the upstream data packet as being modulated by QPSK or 16-QAM.

As mentioned above, the communication of slot timing information and/or data-type information is performed after a ranging process, such that the power level, carrier frequency and slot timing of the received upstream data packets have been adjusted to desirable values.

According to the other aspect of the present invention, error information is communicated from the burst receiver to the MAC to estimate the channel quality. Thus, the error information facilitates spectrum allocation or channel assignments and also facilitates the making of adjustments to forward error correction gain in upstream data transmissions. Also, the communicated error information facilitates changes in guard band widths in upstream data transmissions.

The error information communicated from the burst receiver to the MAC is representative of forward error correction errors and/or packet error statistics. Information is, for example, transmitted from the burst receiver to the MAC as a series of data bursts. Error information is also, for

example, transmitted from the burst receiver to the MAC as a series of data bursts. The data bursts for both the data and the error information may be, for example, transmitted at a serial clock rate of the burst receiver.

According to one exemplary embodiment of the present invention, the error information is transmitted from the burst receiver to the MAC as prepended information. Thus, the present invention optionally includes the prepending of control information to data which is sent from the burst receiver to the MAC. The prepended control information include channel statistics.

The channel statistics of the prepended information include, for example, FECOK, correctable FEC error, uncorrected FEC error, no unique word detected, collided packet, no energy, and packet length violation.

The MAC may determine additional statistics from the prepended channel statistics. Such additional statistics include, for example, number of slots, number of slots with power but no data, number of slots with bad data, number of good data slots, total number of FEC blocks, number of FEC blocks with correctable errors, number of uncorrectable FEC blocks, number of requests received number of collided requests, number of corrupted requests, number of packets received number of collided packets, number of corrupted packets, number of ranging messages received number of collided ranging messages received and number of corrupted ranging messages. Referring now to FIG. **35**, a sample date packet **719** includes a QPSK-like portion **725** and a QPSK or 16-QAM portion **726** comprising a payload **723**. Guard times **724** are typically used between adjacent data packets. The QPSK or QPSK-like portion **725** includes a preamble **720**, a unique word **721**, and optionally, an equalization training or ranging portion **722**, which facilitates ranging, as described in detail above.

Referring now to FIG. **43**, the upstream minislot and interval definition is shown. According to one example of the present invention, a minislot clock (MSCLK) defines a plurality of minislots **415**, wherein each new minislot occurs at the rising edge **416** of the minislot clock **100**. A plurality of minislots typically define each request interval **417**, maintenance interval **418**, and data interval **419** of a MAP **420**.

The request interval **417** of the MAP **420** defines a time period during which the plurality of cable modems may contend for the transmission of a request to the cable modem termination system. The request is a request to send a specified amount of data from the cable modem to the cable modem termination system.

The maintenance interval **418** of the MAP **420** is used to facilitate housekeeping functions such as ranging, as discussed in detail above. The data interval **419** of the MAP **420** defines the time slot within which data is transferred from a particular cable modem to the cable modem termination system. It is information about this data interval **419** which is communicated from the MAC to the burst receiver according to one aspect of the present invention. This data includes information representative of the start time and the duration of the data interval **419**. By communicating information representative of the start time and duration of the data interval **419** from the MAC to the burst receiver, the burst receiver is able to process incoming data packets more efficiently. Since the burst receiver knows when to expect data packets from individual cable modems, the burst receiver is able to easily separate the data packets from different cable modems from one another and to perform subsequent processing thereupon.

Many of the terms and abbreviations discussed below are explained and/or defined in the Data-Over-Cable Service Interface Specifications (DOCSIS) Radio Frequency Interface Specification SP-RFI-I02-971008, which is the Multimedia Cable Network System (MCNS) specification for cable modem systems, the contents of which are hereby incorporated by reference.

Referring now to FIG. **44**, the MAP message **421** format prior to processing by the message filter of the MAC is shown. The MAP message **421** typically contains a MAC management header **422** which contains information which facilitates desired processing by the MAC. An upstream channel ID **423** indicates which upstream frequency channel the MAP message is to be applied to. The UCD count **424** matches the value of the configuration change count of the UCD which describes the burst parameters which apply to the MAP.

The number of elements **425** provides an indication of the number of elements transmitted in this map. The allocation start time **427** indicates the effective start time from cable modem termination system initialization (in units of minislots) available for assignments according to this MAP. The acknowledgment (Ack) **428** indicates the latest time, from cable modem termination system initialization (in units of minislots) which has been processed in the upstream data communications. This time is used by the cable modems for collision detection purposes.

The ranging back-off start **429** is an initial back-off window for initial ranging contention, expressed as a power of two. Values for the ranging back-off start range from 0 to 15, wherein the highest order bits must be unused and set to 0.

The ranging back-off end **430** is the final back-off window for initial ranging contention, expressed as a power of two. Values for the ranging back-off end **430** range from0 to 15, wherein the highest order bits must be unused and set to 0.

MAP information elements **433** define the time slots during which individual cable modems transmit on a particular upstream channel to the cable modem termination system. A plurality of intervals of the MAP, such as the first interval **435**, the second interval **436**, and the last interval **437**, define the individual time slots.

Each interval **435**–**437** includes a station or service identifier (SID) value **439** which identifies the cable modem for which the interval (and therefore the time slot defined thereby, applies. SID equals 0 defines the end of the list of intervals, thus indicating that all intervals have been defined. The interval usage code (IUC) **440** defines the burst parameters to be utilized during the specified timing slot. Such burst parameters include the modulation type, e.g., QPSK or 16-QAM. The offset **441** indicates when, with respect to a common time reference, each interval begins. Offset equals 0 defines a beginning of the first interval.

Optionally, each MAP has a fixed length and format, such that unused intervals **442** may occur after the last interval **437**. Acknowledgment and deferrals **443** optionally may be inserted into the list of intervals, generally after the end of list **438**.

Referring now to FIG. **45**, after the format of the MAP message has been filtered by the MAC for communication from the MAC to the burst receiver, the MAP message includes an allocation start time **150** and a plurality of MAP information elements **151**–**153**. Each MAP information element generally includes a service ID **155** which identifies the cable modem for which the slot time of the MAP information applies, an interval usage code **159** which

identifies the burst type utilized by the cable modem during the time slot, and also identifies the slot time, typically in units of minislots.

Referring now to FIG. **46**, the architecture of an exemplary shared SRAM-based MAP interface of a MAC for eight upstream channels of an exemplary cable modem termination system is shown. A MAP message filter **171** receives downstream MAC frames which contain MAPs having the message format shown in FIG. **44**, as it is constructed prior to filtering. The MAP message filter **171** filters each MAP message so as to provide a filtered MAP message having a format such as that shown in FIG. **45**.

After filtering, the contents of the filtered MAP are stored in 64×9 MAP internal FIFO **161** and the channel to which the MAP message applies is stored in 16×8 channel select FIFO **173**. SRAM controller **163** then controls the storage of the MAP internal FIFO **161** contents and the channel select FIFO **173** contents in an external 64K×16 SRAM **174** and then the SRAM controller **163** effects the transmission of the contents of the external 64K×16 SRAM **174** to the appropriate, e.g., proper channel, MAP control interface **165**–**167**. Each MAP control interface **165**–**167** provides control signals from the MAC to one of eight burst receivers of the cable modem termination system. The control signals include minislot clock (MSCLK), Map Valid (MapValid), Map Clock (MapClk) and Map Data (MapData).

Instead of having an offset field which is defined in the original DOCSIS specification, two adjacent offsets are subtracted so as to compute the actual length of the interval in units of minislots.

Referring now to FIG. **47**, the interface between each MAP control interface **165**–**167** (shown in FIG. **46**) includes four conductors which provide communication from the MAP control interface to the burst receiver demodulator **177**. It is important to appreciate that generally there is a dedicated MAP control interface **165**–**167** for each of eight burst receiver demodulators **177**. Thus, there is a dedicated pair of MAP control interfaces **165**–**167** and burst receiver demodulators **177** for each upstream frequency channel.

Thus, FIG. **47** shows the signals for one channel of the MAP control interface between the MAC and the burst demodulator. There are a total of four signals MSCLK, MapValid MapData, MapClk, and each of these four signals are replicated for each upstream channel. MSLK provides the burst demodulator with a timing reference for minislots. According to the present invention, each rising edge of the MSLK signal defines the beginning of an upstream minislot. The MapValid MapData and MapClk form a serial interface which transfers the 32 bit MAP information element stored in memory to the demodulator of the burst receiver at the appropriate time.

As shown in FIGS. **46** and **47**, minislot clock (MSCLK), Map Valid (MapValid), Map Data (MapData) and Map Clock (MapClk) signals are communicated from each MAP control interface **165**–**167** to each demodulator **177**.

Referring now to FIG. **48**, timing control of the MAP which defines the upstream request interval **480**, maintenance interval **418** and data interval **483** is shown.

The minislot count **730** begins at the beginning of the request interval **480** and continues until the end of the data interval **483**. The minislot clock **100** provides for the timing of the request interval **480**, maintenance interval **418** and data interval **483** as discussed above. A Map Valid signal **190** transitions to a low state **731** when Map data **732** is present.

Map Data **732** may, for example, contain 32 bits of data which define a station or service identifier (SID) **155** (14 bits) which identifies the cable modem which is providing the upstream communication, an interval usage code **159** (4 bits) which defines the modulation type utilized by the cable modem, and a region length and minislots **169** (14 bits) which defines the length of the time slot which contains the data being transmitted from the cable modem to the cable modem termination system.

A Map Clock **733**, typically running at a much higher rate than the minislot clock **100**, defines the timing of the station or service identifier (SID) **155**, the interval usage code **159** and the region length in minislots **169**.

The MAP control interface of the MAC derives the starting time for each MAP interval from the allocation start time and the length of the previous MAP interval. The MAP control interface of the MAC transfers the MAP information element (IE) when its internal minislot count is less than one starting time of the MAP interval. A MAP information element (IE) is transferred as shown by the MapValid signal going low, after the minislot count turns to N+2, and the starting time of the MAP interval for the information element (IE) being transferred is minislot N+3. For the burst demodulator, the rising edge of the minislot clock (MSCLK) signal right after a rising edge of the MapValid signal defines the beginning of the MAP interval for the MAP information element (IE) just received.

The time critical MAP interface includes two important concepts. First, the processing of the MAP message and conversion to a simplified format which is acceptable to the PHY or demodulator of the burst receiver, second the use of a set of control signals to communicate this MAP information to the demodulator of the burst receiver utilizing a 4-signal interface.

Referring now to FIG. **49**, inference of the receive now (Rx now) **220** signal for a maintenance interval **418**, having a length of 6 minislots, for example, is shown. The Receive now **220** signal is provided at the beginning of a minislot **415** which is the first minislot of the maintenance interval (as shown in FIG. **49**) and provides an indication that the maintenance interval has begun.

For maintenance intervals, including initial and station maintenance, and data intervals, including both short and long data intervals, the burst demodulator is configured to receive only one packet per interval. Thus, the beginning of the MAP interval represents the Receive now signal for the burst demodulator.

Referring now to FIG. **50**, in a similar manner, a Receive now **220** signal is inferred for a MAP **420** and is issued at the beginning of the first minislot of the data interval **419**.

Referring now to FIG. **51**, a plurality of Receive now signals **220** may be associated with each request interval, since each request interval may contain a plurality of requests, each request from a different cable modem. It is assumed in this example that each request message requires two minislots to transmit.

The multimedia cable network system (MCNS) Data-Over-Cable Service Interface Specifications (DOCSIS) radio frequency interface specification (SP-RFI-I02-971008) protocol specifies a time-division multiple access (TDMA) protocol for the upstream transmission of data packets from cable modems to a cable modem termination system. In order to send data upstream, each cable modem must request a data slot large enough to hold the desired data. The CMTS responds to such request from the cable modems with a logical message (MAP) which is broadcast to all of the cable modems on a particular frequency channel. The MAP message specifies the upstream framing structure, so as to provide individual time slots within which each cable modem may transmit. The MAP specifies which cable

modems may transmit, when they may transmit, and how, e.g., using what modulation type, they may utilize to transmit. When the appropriate TDMA time slot arrives (in time) a cable modem sends a burst of data, e.g., a data packet, to the cable modem termination system. Each cable modem is typically identified by one or more station or service identifiers (SID). Each TDMA time slot is typically an integer number of minislots, wherein each minislot is an arbitrary timing reference provided by the medium access control (MAC). The MCNS protocol negotiates sets of transmission parameters between the cable modems and the cable modem termination system. The parameters define how data is formatted during upstream bursts from each cable modem to the cable modem termination system. The DOCSIS protocol currently defines six burst types which may be used in upstream communications. Each burst type defines the modulation to be utilized during such upstream communications. The burst type is constant during a particular window in time, e.g., a time slot, and the burst type is designated by an interval usage code (IUC).

The MAP message specifies which SID or cable modem has control of upstream communications on a particular frequency channel during each TDMA time slot. The MAP message also specifies the time at which the time slot begins and which interval usage code or burst type is to be used. The number of minislots allocated for a particular time slot is determined for example, by taking the difference between the current TDMA time slot and the next TDMA time slot.

Ranging in power, slot timing and carrier frequency, as described above, is important in this TDMA communication system. Power control is required in order to normalize receive power at the cable modem termination system, so as to mitigate interchannel interference. Controlling carrier frequency ensures proper channelization and the frequency domain for upstream communications. Collisions between data packets and the time domain are mitigated by adjusting slot timing to account for different propagation delays between the cable modem termination system and each individual cable modem on a given frequency channel.

Besides the upstream adjacent channel noise or interference sources which effect power, time and carrier frequency offsets, the upstream channel is also affected by other channel impairments, such as radio frequency interference (RFI) noise. In order to maintain adequate channel quality, channel error characteristics are monitored over time so that as the channel improves or degrades, usage may be adapted as discussed above. High level channel adaptation algorithms use these parameters to preempt upstream channel failure by increasing forward error correction (FEC) coding gain, changing guard times and/or changing frequency. Since the upstream channel consist of many TDMA point-to-point links, the channel parameters are derived from a statistical analysis of simple accumulated measures such as FEC error and packet error statistics, as described above.

In order to support such channel quality maintenance features, the burst receiver and the MAC, according to the present invention, communicate appropriate information.

According to the present invention, MAC data is broken into FEC blocks, each FEC block is encapsulated with 2 status bytes and 0 to 46 bytes of prepended information, status byte fields are used to pass error information and enable statistics calculation and prepended data contains ranging offsets and indicates when ranging is required as discussed in detail below.

According to the present invention, three individual interfaces between the medium access control (MAC) layer and the physical layer (PHY) or burst receiver are provided. These three individual interfaces are a shared purpose interface, e.g., either an SPI or I2C, a time critical serial interface for specifying TDMA burst information such as the station or service identifier (SID) and the interval usage code (IUC), and a dedicated data interface which is used to pass raw data and in-band control messages, as discussed in detail below.

The shared general purpose interface, typically either a SPI or an I2C, is used to configure non-time critical parameters such as burst profiles, configuration parameters and reading status.

The upstream data is transmitted from the PHY or burst receiver to the MAC using a dedicated 3-wire data interface. This interface includes a serial data line, a free-running serial clock and a burst valid indicator. Since the upstream data is processed in blocks, a single upstream transmission may be transmitted between the burst receiver and the MAC as a series of bursts at the serial clock rate.

For request and request/data regions, the demodulator of the burst receiver is expecting to receive multiple packets during the interval, and there will be multiple Receive now signals which are received by the demodulator of the burst receiver.

As shown in FIG. **43**, there is a request interval of 6 minislots (3 of which are represented) and it is assumed that each upstream request message will need 2 minislots in order to transmit. Therefore, there will be a total of three Rx now signals perceived by the demodulator of the burst receiver. These Rx now signals are located with offsets of 0, 2 and 4 minislots from the beginning of the interval.

Referring now to FIG. **52**, it is important to note that if the first block of a TDMA transmission bit is set, then the prepended information includes 2 status bytes, 4 timestamp bytes, 1 channel ID byte, 2 SID bytes, 2 power bytes, 2 frequency bytes and 3 time bytes. The power bytes, frequency bytes, and time bytes include a total of 7 bytes utilized for ranging offsets.

Referring now to FIG. **53**, if the equalizer prepend bit is set, then the prepended information is increased by 32 bytes to provide a total length of 48 bytes, include 2 status bytes, 4 timestamp bytes, 1 channel ID byte, 2 SID bytes, 2 power bytes, 2 frequency bytes, 3 time bytes and 32 equalizer coefficient bytes. Again, the power bytes, frequency bytes and time bytes define 7 bytes utilized for ranging offsets.

Referring now to FIG. **54**, statistics are kept using counters as shown. These statistics are based upon bits [7:5] of the status bytes.

There are two important concepts with respect to the design of the MAP control interface of the MAC. The first important concept regards the processing of downstream MAP messages, wherein conversion from a format which is specified for the MCNS Data-Over-Cable Service Interface Specification (DOCSIS) to a simplified format which is easy for the MAC to process. The second concept regards the set of control signals which are communicated between the MAP interface and the burst demodulator, including how the signals are toggled so as to convey to the burst demodulator information such as when to receive a packet, the service ID (SID) associated with an incoming packet, the expected length of the region where the packet is going to show up (the time slot for the data packet), and the packet type.

Upstream bandwidth is divided into minislots, which are the smallest time unit utilized by the MAP for bandwidth requests and grants. The exact number of bytes per minislot is typically variable and is usually programmed into the MAC and the burst demodulator via a generic CPU interface or the like. In order to define the minislot reference for the burst demodulator, the MAC provides a signal called the

minislot clock (MSCLK) to the burst demodulator. Each rising edge of the minislot clock signal defines the beginning of a new minislot as shown in FIG. **43**.

An upstream interval generally consists of an integer number of minislots. There are a plurality of different types, e.g., six different types, of intervals currently defined by the MCNS DOCSIS specification, which include a request interval, an initial maintenance interval, a station maintenance interval, a short data interval, a long data interval, and a request/data interval, as discussed in detail below. The relationship of the request interval, maintenance interval and short and long data intervals with respect to their minislots and the minislot clock is shown in FIGS. **43** and **48**–**50**.

As discussed above, the MAP messages contain the information which enables the burst demodulator to perform the task of receiving and separating upstream packets. A message filter module is designed to snoop all downstream packets and filter out the MAP messages contained therein. The format of the MAP messages is simplified after such filtering. FIG. **44** shows MAP message format prior to MAP message filtering and FIG. **45** shows MAP message format after MAP message filtering, as discussed in detail below.

By encapsulating each MAC/PHY block with a 2 byte header, the PHY or burst receiver can pass in-band control information to the MAC. The MAC can then use the prepended information to collect channel statistics, as well as pass link related information to higher processes, such as ranging required. This in-band control allows the headend to sense impending channel failure before such failure actually happens, thereby avoiding catastrophic data loss.

Referring now to FIG. **55**, the upstream MAC/PHY interface, between the headend (HE) or cable modem termination system (CMTS) MAC **213** and the demodulator **34** of the burst receiver is shown. As discussed above, this interface includes a serial data interface **320**, an SPI (or I2C) interface **330** and a serial control interface **240**. The serial data interface **320** facilitates the communication of upstream data, including prepended information, from the burst demodulator to the MAC. The SPI interface **330** is utilized for general configuration of the MAC and/or burst demodulator. The serial control interface **240** is a time critical interface utilized for the transmission of time critical MAP information from the MAC to the burst demodulator.

According to the present invention, MAC data is broken into forward error correction (FEC) blocks. Each FEC block is encapsulated with 2 status bytes and 0 to 46 bytes of prepended information. Status byte fields are used to pass error information and to enable statistics calculation. The prepended data contains ranging offsets and optional equalizer coefficients. The upstream data is transmitted from the PHY (burst demodulator **34**) to the MAC **213** using a dedicated 3-wire serial data interface **320**. The dedicated serial data interface includes a serial data line, a free-running serial clock and a burst valid indicator. Since the upstream data is processed in blocks, a single upstream transmission may be transmitted between the demodulator of the burst receiver and the MAC as a series of data bursts at the clock rate. In addition to the serial data, the MAC needs additional information including identification as to which MAC/PHY bursts to which TDMA slots, as well as other information indicating error quality of the received TDMA transmission.

Referring now to FIG. **56**, the free-running bit clock (BITCLK) **316**, the burst valid indicator (BLKDV) **317**, and the serial data line **302** having prepended information **318** and data **304** thereon, are shown.

Referring now to FIG. **58**, the format of the prepended data with equalizer coefficients is shown. The prepended data includes 2 bytes of status flags **250**, 4 bytes of timestamp **252**, a 1 byte channel ID **254**, a 2 byte station or service identifier (SID) **255**, 7 bytes of ranging offset **256** and 32 bytes of equalizer coefficients **257**. Using this prepended information, error conditions of the packet may be determined and the PHY parameters may be passed to higher level processes. Channel condition statistics may also be maintained.

Referring now to FIG. **59**, the subscriber PHY interface includes two important concepts. First, control information is prepended to the actual packet data **360**. This prepended information includes a burst-type byte **362** and a packet length **363**, generally of 2 bytes. The subscriber re-programs the PHY for each individual burst. Since this re-programming may require the exchange of significant amounts of data and must be done in real time, a particular architecture has been developed. A non-real-time general purpose interface is used to program burst types which are identified by a short ID (burst type). Only the ID and length are transferred in real-time in order to effect immediate re-programming without being impacted by the speed of external interfaces. Real-time control data is piggybacked on the transmit data interface so as to reduce complexity.

Referring now to FIG. **60**, an initialization process is generally utilized wherein a plug-and-play-like sign-on or registration sequence is utilized between the headend or cable modem termination system **10** which includes the burst receiver **332** and MAC **213** (FIG. **34**) and the subscriber or cable modem **12**. According to this initialization process, a timebase message **398**, a default configuration message **402** and a sign-on message **403** are communicated from the cable modem termination system **10** to the cable modem **12** during initialization. A default configuration message (ranging channel frequency, transmission rate, initial power level, contention-based access slot information, etc.) is sent for each downloaded frame and the timebase message and default configuration message facilitate upstream time configuration.

A sign-on message **403** transmitted from the cable modem termination system **10** to the cable modem **12** facilitates contention based ranging performed upon a dedicated channel. Typically, the cable modem **10** responds with a sign-on response message **404**. Then ranging **405** is initiated by the headend **10** to determine slot timing corrections, carrier frequency corrections, and power corrections. Ranging calibration responses **406** are transmitted from the cable modem **12** to the headend **10**.

Service channel, logic address and encryption key information are transferred between the cable modem termination system **10** and the cable modem **12** via re-provision message **407** transmitted from the cable modem termination system **10** to the cable modem **12** and via re-provision response message **408** transmitted from the cable modem **12** to the cable modem termination system **10**. When the process is complete, an initialization complete message **409** is transmitted from the cable modem termination system **10** to the cable modem **12**.

Referring now to FIG. **61**, the MAC framing and the PHY or burst receiver framing are decoupled and upstream frame synchronization is based on timestamp messages (msgs). The cable modem termination system **10** generates a timestamp message which is utilized by a subscriber cable modem **12** to effect timing synchronization such that proper slot timing is facilitated. The output from a headend timing generation circuit **449** is reduced in frequency by a divider **450** and is used by a timestamp counter **451** to generate slot/frame timing **452**. The slot/frame timing is transmitted

via continuous modulator **470** through analog front end **471** over a desired downstream frequency channel **472**, typically utilizing a hybrid fiber coax (HFC) network to the analog front end **473** of a desired subscriber cable modem **12**. A continuous demodulator **474** demodulates the slot/frame time and provides it to a timing recovery circuit **475** which utilizes a timestamp detector **476** to provide the slot/frame timing to a digital timing loop defined by loop filter **477**, numerically controlled oscillator **478** and local timestamp counter **479**. The loop generates slot/frame timing for use by the subscriber cable modem **12** in generating upstream TDMA messages.

Thus, the subscriber cable modem **12** is capable of transmitting upstream data via burst modulator **458** and analog front end **457** in a desired upstream channel **456**, typically via a hybrid fiber coax (HFC) network to the analog front end **455** of the cable modem termination system, wherein the message is demodulated by burst demodulator **34**.

Referring now to FIG. **57**, the MAP serial interface (MAC to PHY) field definition includes a service ID **496** of 14 bytes, a slot type **497** of 4 bytes and a slot region length **498** of 14 bytes.

Referring now to FIG. **62**, the prepended information (form PHY to MAC) includes status information **735** of 2 bytes, minislot control **736** signal of 4 bytes, a channel ID **737** of 1 byte, a station or service identifier (SID) **738** of 2 bytes, ranging information **739** of 7 bytes and equalizer coefficients **740** of 32 bytes.

Referring now to FIG. **63**, each MAC/PHY burst is tagged with 2 status bytes as indicated.

Referring now to FIG. **64**, burst demodulator status information processing flow is shown. Forward error correction (FEC) **741** and demodulation information **745** are added to prepended information **742**, and receiver TDMA control **744** is provided by MAP interface **743**. The forward error correction **741** information includes forward error correction statistics such as: no forward error correction errors (No FEC ERR), correctable forward error corrected errors (Corr FEC Err), and uncorrectable forward error correction errors (Uncorr FEC Err).

The MAP interface information **743** includes service slot type information. The receiver TDMA control **744** includes information indicative of the first and last block of information. The demodulator information **745** includes unique word detected ranging information and equalizer coefficients.

Referring now to FIG. **65**, the burst demodulator SPI bus interface is shown. The SPI interface **330** provides set-up information to configuration registers **560**. The set-up configuration includes the carrier frequency, the baud rate, the minislot size, the required packet size, and ranging thresholds.

The SPI interface **330** also provides burst configuration information to burst configuration registers **562** via multiplexer **563** and data registers **564**, **565** and **566**. The burst configuration information includes unique word pattern, unique word window, QAM mode, forward error correction parameters, such as N, K and T, guard time, de-randomizer information, differential encoding information, preamble length and equalizer training length.

Referring now to FIG. **66** (a detailed drawing of FIG. **59**), the generic byte base serial input interface at the upstream MAC/PHY interface at the subscriber cable modem with control information prepended and TXS2P=1, includes the standard ATM signals of transmit clock (TX CLK) **601***a*, transmit enable bar (TX ENAB) **602***a*, transmit cell available (TX CLAV) **603***a*, transmit start-of-cell (TX_SOC) **604***a*, and transmit data (TX_DATA) **605***a*. When the control bit, TXS2P is set to equal 1, then transmitted data (TX DATA) **605***a* is transmitted most significant bit (MSB) first.

Referring now to FIG. **67** (another detailed drawing of FIG. **59**), the transmit clock (TX CLK) **601***b*, transmit enable bar (TX ENAB) **602***b*, transmit cell available (TX-_CLAV) **603***b*, transmit_start-of-cell (TX_SOC) **604***b* and transmit data (TX_DATA) **605***b* are shown when TXS2P is set to zero. When TxS2P is set to 0, then the least significant bit (LSB) is transmitted first.

Although the present invention is described and illustrated herein as providing acquisition in 16 symbols or less, the present invention may also be utilized to provide acquisition in greater than 16 symbols. For example, the present invention may be utilized to provide acquisition in 24 symbols. Thus, use of the present to provide acquisition in 16 symbols or less is by way of example only and not by way of limitation.

Data Packet Fragmentation in a Cable Modem System

Data packets are transmitted from the cable modems to the cable modem termination system within time slots which are allocated by the cable modem termination system and wherein a data packet is fragmented or divided among a plurality of time slots when a time slot which is sufficiently large to contain the data packet cannot be defined due to data flow and bandwidth constraints.

Referring now to FIG. **68**, the fragmentation of a data packet by a cable modem into first and second portions thereof is shown, wherein the first portion of the data packet is placed in a first time slot allocated by the cable modem termination system and the second portion of the data packet is placed in a second time slot allocated by the cable modem termination system.

As shown in FIG. **68**, a data packet **410** which is too large to fit within a first time slot **491***a* is fragmented by an appropriate device such as a cable modem such that a first portion **410***a* of the data packet **410** is placed in the first time slot **491***a* and the remaining or second portion **410***b* of the data packet **410** is placed within the second time slot **491***b* of the upstream channel **491**.

For example, if the maximum size of each time slot **491***a*, **491***b* is 256 symbols and the data packet **410** conforms 300 symbols, then 256 symbols of the data packet **410** are put into the first time slot **491***a* and the remaining 44 symbols are put into the second time slot **491***b*.

This placing of the data packet **410**, whether fragmented or not, within the allocated time slots **491***a* and **491***b* prevents undesirable collisions among a plurality of such data packets transmitted by a corresponding plurality of cable modems upon a given frequency channel. The use of guard bands **209** in the upstream channel **491** tend to further mitigate the occurrence of such undesirable collisions by providing an unused time space between each time slot of the upstream channel **491** so as to accommodate differences in synchronization between the cable modem termination system and the various cable modems.

The assignment of such time slots is accomplished by providing a request contention area in the upstream data path within which the cable modems are permitted to contend in order to place a message which requests additional time in the upstream data path for the transmission of their message. The cable modem termination system responds to these requests by assigning time slots to the cable modems making such a request, so that as many of the cable modems as possible may transmit their messages to the cable modem

termination system utilizing TDMA and so that the transmissions are performed without undesirable collisions. This time slot assignment by the cable modem termination system is known as a grant because the cable modem termination system is granting a particular cable modem permission to use a specific period of time in the upstream.

The cable modem termination system usually tries to match the grant to the request so that the cable modem is given sufficient bandwidth for its transmission.

It is not always possible for the cable modem termination system to allocate a sufficiently large time slot in response to a request from the cable modem so as to contain all of the data packet for which the request was sent. This insufficiently large time slot allocation is referred to as a partial grant. This may happen, for example, when upstream traffic between the cable modems and the cable modem termination system is heavy. Thus, in such instances, it is desirable to divide or fragment the data packet among a plurality of such time slots. Another example is when the cable modem termination system supports constant bit rate services, such as voice, in the upstream direction. These services require grants at periodic intervals. When supporting these types of services, the cable modem termination system may need to send a partial grant to one modem in order to schedule a constant bit rate service for another modem.

It is desirable to define a system for fragmenting data packets which minimizes wasted bandwidth. In accordance with the present invention, a technique is provided for fragmenting data packets in a cable modem system wherein data packets larger than an allocated time slot are split among a plurality of time slots.

In response to receiving the request, the cable modem termination system allocates a time slot for transmission of at least a portion of the data packet from the cable modem to the cable modem termination system. Alternatively, the allocation may be performed by a different device, e.g., a device other than the cable modem termination system, referred to herein generally as a dynamic time slot controller.

Information representative of the time slot is transmitted from a dynamic time slot controller, such as the cable modem termination system, to the cable modem.

At least a portion of the data packet is transmitted from the cable modem to the cable modem termination system within the allocated time slot. Transmitting at least a portion of the data packet from the cable modem to the cable modem termination system within the time slot mitigates undesirable collisions between data packets which are transmitted by different cable modems to the cable modem termination system upon a common frequency channel. Thus, the simultaneous transmission of data packets by different cable modems upon a common frequency channel is prevented.

When the time slot allocated for the transmission of the data packet from the cable modem to the cable modem termination system is sufficient for transmission of only a portion of the data packet for which the request was transmitted then the cable modem transmits only a portion of the data packet for which the request was transmitted and the cable modem termination system allocates at least one additional time slot and transmits to the cable modem information representative of the additional time slot(s), so as to facilitate transmission of the remaining portion of the data packet from the cable modem to the cable modem transmission system.

Occasionally, due to bandwidth constraints and the amount of data flow on a given channel, it is not possible to allocate a time slot which is sufficient for transmission of the entire data packet for which a request was received by the cable modem termination system. Rather than denying the request altogether, according to the present invention, a time slot is allocated by the dynamic time slot controller so as to facilitate the transmission of at least a portion of the data packet from the cable modem to the cable modem termination system. One or more additional time slots are then allocated to facilitate transmission of the remaining portion of the data packet from the cable modem to the cable modem termination system. Thus, the remaining portion of the packet may be split or fragmented among a plurality of such additional time slots, if necessary.

Briefly, upstream data transmission on an upstream channel is initiated by a request made by a cable modem for a quantity of bandwidth, i.e., a plurality of time slots, to transmit data comprising a message. The size of the request includes payload i.e., the data being transmitted and overhead such as preamble, FEC bits, guard band etc. After the request is received at the headend the CMTS grants bandwidth to the requesting cable modem and transmits the size of the grant and the specific time slots to which the data is assigned for insertion to the requesting cable modem. If the grant is smaller than the size of the request, i.e., a partial grant, the cable modem senses this condition and separates data into two or more fragments for transmission. : If the cable modem has not received an additional grant or grant pending prior to the transmission time of the partial grant, the cable modem inserts a request for additional bandwidth into the fragment header. This bandwidth request, called a piggyback request, is for the amount of bandwidth required to send the remainder of the packet. If the cable modem has received an additional grant or grant pending prior to the transmission time of the partial grant, the cable modem assigns a value of zero to the piggyback request field in the fragment header. The cable modem transmits the first fragment in the assigned time slots. The cable modem treats each subsequent grant in the same manner. If additional grants (or grant pendings) are enqueued at the cable modem during the transmission time of a fragment, the cable modem does not include a piggyback request. If additional grants are not enqueued at the cable modem during the transmission time of a packet or fragment, the cable modem inserts a piggyback request for enough bandwidth to transmit the remainder of the packet being fragmented. The piggyback field of the last fragment of a packet can be used to transmit a request for the amount of bandwidth necessary to transmit the next packet enqueued at the cable modem.

The CMTS can operate in either of two different modes: multiple grant mode or piggyback mode. In multiple grant mode, the CMTS must retain the state of fragmentation for each modem. The CMTS allots bandwidth to the requesting cable modem and determines the amount of data required to fill the allotted bandwidth, taking into account the overhead required to transmit the fragment, and sends a partial grant for the fragmented data to the cable modem. The CMTS also transmits to the cable modem a partial grant for the remaining data fragment if there is bandwidth available in the current MAP or a grant pending if bandwidth must be provided by a subsequent MAP. A grant pending signal is sent in each subsequent MAP until the grant can be fulfilled. In this mode, the cable modems insert fragmented data pursuant to the grants as determined by the CMTS.

In multiple grant mode, the CMTS does not need to retain the state of fragmentation for each modem. The CMTS allots bandwidth to the requesting cable modem and the requesting cable modem determines the amount of data required to fill the allotted bandwidth, taking into account the overhead required to transmit the fragment. The requesting cable

modem inserts such data in the assigned time slots and checks for partial grants or pending grants from the CMTS. If there are none, this is a signal to the cable modem that the piggyback mode should be used. The requesting cable modem inserts a request for the remainder of the data, including the amount of remaining data, in a piggyback field of the fragment header transmitted to the CMTS. (In the multiple request mode, the piggyback field that accompanies a transmitted data fragment is set to zero.) Responsive to the request in the piggyback field the CMTS transmits another grant to transmit data to the requesting cable modem. If the alloted time slots are insufficient to transmit the entire data fragment, the process is repeated until all the data has been transmitted. In the piggyback mode, the cable modem retains the state of fragmentation, i.e., it keeps track of the remainder of the data to be transmitted during the fragmentation process.

In summary, the cable modem is capable of operating either in the multiple grant mode or the piggyback mode, depending on how the CMTS allocates grants. If the CMTS generates partial grants or pending grants, this is sensed by the cable modem and the cable modem operates in the multiple grant mode. If the CMTS does not generate partial grants or pending grants, this is sensed by the cable modem and the cable modem operates in the piggyback mode.

The size of the payload that can be transmitted in a specified number of time slots depends on the burden imposed by the data transmission format. This size is called the burdened PHY length. In one embodiment, the burdened PHY length is determined by a forward lookup table using the total length of the data in bytes as an index. Each time a request is made by a cable modem, the forward lookup table is accessed using the total length and the burdened PHY length is retrieved for transmission to the CMTS as the request. Grants are transmitted to the cable modems in terms of burdened PHY length. The total length of the data in bytes that can be transmitted pursuant to a grant is determined by a reverse lookup table using the burdened PHY length as an index. The forward and reverse lookup tables are created each time that the burst profile changes and are stored in memory for use in processing requests and grants at the cable modem. Alternatively, the conversion between total length and burdened PHY length could be carried out as described in application Ser. No. 60/489,998 filed on Jan. 15, 1998.

Referring now to FIGS. **69** to **76**, different aspects of an improved system in which the cable modems **12** and the cable modem termination system **10** cooperate to fragment packets of the data transmitted from the cable modems **12** to the cable modem termination system **10** are shown. FIG. **69** specifically shows a complete one of the extended packets **118**. The extended packet **118** is indicated in a block form at **118***a* to show schematically the length of the extended packet. Details of the extended packet are indicated at **118***b* in FIG. **69**. As shown, the extended packet **118***b* includes a header portion **505**. The header portion **505** may be further defined by fields constituting a frame control (FC) **507**, a fragmentation MAC Header (PARM) **504** and a total length (LEN) **516** of the extended packet. The functions of the fields **507**, **504** and **516** and the specific implementation of these fields in binary coding are shown in FIG. **73**.

The extended packet **118***b* includes an extended length field or segment (EHDR) **517** which indicates the length of the data in the extended data packet and which provides for the performance of a number of additional functions shown in FIG. **74**. For example, the field **517** may include flags to indicate the first and last fragments in the packet **118***b* when the packet is fragmented.

The extended packet **118***b* may also include a MAC Header Check Sequence (HCS) **518** which consists of 2 bytes and which insures the integrity of the sequence in the header in a known manner. The header check sequence **518** is followed by data (PDU) **512** (the complete payload) in the extended packet **118***b*. The data **512** is shown in cross-hatched lines in FIG. **69**. A cyclic redundancy check (CRC) **521** follows the data **512**. A cyclic redundancy check such as **521** is known in the prior art to provide an additional check for insuring that the information in the packet **118***b* is complete.

FIG. **70** is a schematic diagram of a concatenation of a number of complete extended packets (such as that of FIG. **69**) provided by one of the cable modems **12**. The concatenation is indicated by a concatenation header **525** which is followed by the information for the first of the extended packets in the concatenation. This information includes a header (MAC HDR**1**) **527** for the first one of the concatenated packets, a payload (PDU) **528** for the first one of the concatenated packets and a cyclic redundancy check **529** for the first one of the concatenated packets. Similar information is provided for the successive ones of the extended packets in the concatenation. The last one (the nth) of the extended packets in the concatenation is indicated by a MAC header (MAC HDRn) **530**, a payload (PDUn) **532** and a cycle redundancy check (CRCn) **534**. The payload **528** and **532** are indicated in cross-hatched lines.

FIG. **71** is a schematic diagram of a plurality of data packet fragments transmitted from the cable modem **12** to the cable modem termination system **10**, wherein the data packet fragments form, in composite, a complete data packet. FIG. **71** schematically shows different fragmentary portions, generally indicated at **540***a*, **540***b* and **540***c*, of a complete packet such as the complete packet **118***b* in FIG. **69**. Each of the fragmentation portions, **540***b* and **540***c* includes a fragmentation header **542**, a fragmentation header check sequence **544**, a payload fragment **546** and a fragmentation check redundancy cycle **548**. Thus, the fragmentary portions **540***a*, **540***b* and **540***c* form, in composite, the complete payload for the packet **118**.

Each of the fragmentation headers **542** includes a frame control (FC) **541**, a segment (EHDR LEN) **543** indicating the length of the fragmentation header **542**, a length segment (LEN) **545** indicating the length of the fragmentation header **542** and an extended header (EHDR) **547** containing additional information about the fragment.

FIG. **72** shows the fragmentary portion **540***a* in additional detail. As shown in FIG. **72**, the fragmentary portion **540***a* includes the frame control (1 byte) **541**, a MAC_PARM (1 byte) **578**, the indication (LEN) (2 bytes) **545**, the extended header (EHDR) (6 bytes) **547**, the header check sequence (FHCS) (2 bytes) **544**, the payload fragment **546** and the fragment cyclic redundancy check (FCRC) (4 bytes) **548**. The MAC_PARM **578** indicates the length of the EHDR **547**.

The frame control **541** is shown in FIG. **72** as including an FC type **549**. The FC type **549** indicates a media access controller (MAC) specific header. The FC PARM **568** provides a fragmentation MAC header. The EHDR_ON **550** indicates that a fragmentation EHDR follows. LEN indicates the total length of the fragment including the payload EHDR and FCRC.

The EHDR portion **547** may be considered as including an extended header-type (EH-Type) segment **572** which

indicates the type of data in the fragmentary portion **540***a*. For example, the type of information in the fragmentary portion **540***a* may constitute unencrypted fragmentation data or encrypted fragmentation data. Another segment in the EHDR portion is indicated at **574** and is designated as EH_LEN. It indicates the length of the EHDR. An additional segment **576** is designated as EH_Value. It provides different types of information. For example, it includes a binary bit (or flag) which is set to a binary 1 to indicate a first fragment for the payload in the extended packet **118***b* and another bit (or flag) which is set to a binary 1 to indicate the last fragment for the payload in the extended packet. These bits are provided with a binary 0 for intermediate data fragments between the first data fragment and the last data fragment in the extended packet **118***b*. These flags for the fragments shown in FIG. **71** would be F=1, L=0 for **540***a*, F=0, L=0 for **540***b*, and F=0, L=1 for **540***c*. The segment **576** also includes a sequence number which is incremented for each fragment of a packet. This sequence number can be set to zero for the first fragment within a packet or continue counting from the last fragment of the last packet transmitted for this modem. This sequence number is used by the cable modem termination system to detect lost fragments during packet reassembly.

FIGS. **73** and **74** provide a table indicating, in a first column, the different types of fields shown in FIG. **72**. FIGS. **73** and **74** also include a second column designated as Usage. This column indicates the different sub-fields (if any) shown in FIGS. **69**–**72** for the different fields specified in the first column of FIGS. **73** and **74** and specifies the operations in such sub-fields. The number of bits in the sub-fields is indicated in a third column in FIGS. **73** and **74**. The number of bytes specified for each of the fields in the first column of FIG. **74** is shown in the fourth column of FIG. **74**.

FIGS. **75** and **76** define a flowchart, generally indicated at **600**, in block form and show how the cable modem **12** and the cable modem termination system **10** cooperate in the fragmentation of the payload **118***a* for packets transmitted by the cable modem **12** to the cable modem termination system **10**. The operation of the blocks in the flowchart **600** is initiated at a start block **602**. As indicated at block **604** in FIG. **75**, the cable modem **12** then awaits a packet from an external source. For example, the external source may be a personal computer (PC) **1048** (FIG. **2**) at the home **14** (FIG. **78**) of a subscriber. As shown in block **606**, the cable modem **12** then submits to the cable modem termination system **10** a bandwidth request for enough time slots to transmit the packet. Upon receipt of the request, the cable modem termination system sends a grant or partial grant to the cable modem in the MAP.

The cable modem **12** then checks as at block **609** to determine if the cable modem termination system **10** has granted the request, or any portion the request, from the cable modem **12**. In block **609**, SID is an abbreviation of Service Identification. If the answer is Yes (see line **607** in FIGS. **75** and **76**), the cable modem **12** then determines if the cable modem termination system **10** has granted the full request from the cable modem **12** for the bandwidth. This corresponds to the transmission of the complete data packet from the cable modem **12** to the cable modem termination system **10**. This is indicated at block **625** in FIG. **76**.

If the answer is Yes, as indicated at block **625** in FIG. **76**, the cable modem **12** determines if there is another packet in a queue which is provided to store other packets awaiting transmission to the cable modem termination system **10** from the cable modem **12**. This determination is made at block **629** in FIG. **76**. If there are no other packets queued as indicated on a line **631** in FIGS. **75** and **76**, the cable modem **12** sends the packet without a piggyback request to the cable modem termination system **10** (see block **633** in FIG. **75**) and awaits the arrival of the next packet from the external source as indicated at **604**. If there are additional packets queued as indicated by a line **635** in FIGS. **75** and **76**, the cable modem **12** sends to the cable modem termination system **10** the packet received from the external source and piggybacks on this transmitted packet a request for the next packet in the queue. This is indicated at **620** in FIG. **75**. The cable modem then returns to processing MAPs at **608** looking for additional grants. The cable modem termination system **10** then processes the next request from the cable modem.

The cable modem termination system **10** may not grant the full request for bandwidth from the cable modem **12** in the first MAP **170**. The cable modem termination system **10** then provides this partial grant to the cable modem **12**. If the CMTS operates in multiple grant mode, it will place a grant pending or another grant in the MAP in addition to the partial grant it sends to the cable modem. The cable modem processes the MAPs as shown in block **608** and sees the grant in line **607**. The grant is smaller than the request as on **636** so the cable modem calculates the amount of the packet that will fit in the grant as in block **637**. With a multiple grant mode CMTS, the cable modem will see the partial grant with an additional grant or grant pending in subsequent MAPs as in line **607**. The cable modem then sends the fragment, without any piggyback request as shown in block **628** and line **630** to the cable modem termination system **10**.

The cable modem return to processing map information elements in **608** until it gets to the next grant. The cable modem then repeats the process of checking to see if the grant is large enough as shown in block **625**.

If the next grant is not large enough, the cable modem repeats the process of fragmenting the remaining packet data and as in **626**, checking to see if it needs to send a piggyback request based on additional grants or grant pendings in the MAP.

If the grant is large enough to transmit the rest of the packet on line **627**, the cable modem checks to see if there is another packet enqueued for this same SID. If so, the cable modem sends the remaining portion of the packet with the fragmentation header containing a piggyback request for the amount of time slots needed to transmit the next packet in the queue as shown in block **620**. The cable modem then returns to processing the MAP information elements. If there is not another packet enqueued for this SID, then the cable modem sends the remaining portion of the packet with fragmentation header containing no piggyback request as shown in **633**. The cable modem then returns to **604** to await the arrival of another packet for transmission.

When the cable modem termination system **10** partially grants the request from the cable modem **12** in the first MAP and fails to provide an additional grant or grant pending to the cable modem **12** in the first MAP, the cable modem will not detect additional grants or grant pendings as on line **632**. The cable modem **12** then sends to the cable modem termination system **10** a fragment of the data packet and a piggyback request for the remainder as in **634**. When the cable modem has transmitted the fragment with the piggybacked request as shown on line **638**, the cable modem returns to processing MAP information elements as in **608** while waiting for additional grants. When the cable modem termination system receives the fragment with the piggybacked request, the cable modem termination system must decide whether to grant the new request or send a partial

grant based on the new request. This decision is based on the scheduling algorithms implemented on the cable modem termination system.

Any time during the request/grant process, the cable modem termination system could fail to receive a request or the cable modem could fail to receive a grant for a variety of reasons. As a fail safe mechanism, the cable modem termination system places an acknowledgment time, or ACK time, in the MAPs it transmits. This ACK time reflects the time of the last request it has processed for the current MAP. The cable modem uses this ACK time to determine if its request has been lost. The ACK timer is said to have "expired" when the cable modem is waiting for a grant and receives a MAP with an ACK time later in time than when the cable modem transmitted its request. As the cable modem is looking for grants at **609**, if the ACK time has not expired as on **644**, the cable modem returns to processing the MAPs as in **608**. If the ACK timer does expire as on **646**, the cable modem checks to see how many times it has retried sending the request in **648**. If the number of retries is above some threshold the retries have been exhausted as on **654** and the cable modem tosses any untransmitted portion of the packet at **656** and awaits the arrival of the next packet. If the ACK timer has expired and the number of retries have not been exhausted as in arrow **650**, the cable modem uses a contention request region to transmit another request for the amount of time slots necessary to transmit the untransmitted portion of the packet as in **652**. The cable modem then returns to processing the MAPS.

The operation of the cable modem in transmitting fragmented data is illustrated by the following example considered with FIG. **77**.

1. (Requesting State)—CM wants to transmit a 1018 byte packet. CM calculates how much physical layer overhead (POH) is required and requests the appropriate number of minislots. CM makes a request in a contention region. Go to step **2**.
2. (Waiting for Grant)—CM monitors MAPs for a grant or grant pending for this SID. If the CM's ACK time expires before the CM receives a grant or grant pending, the CM retries requesting for the packet until the retry count is exhausted—then the CM gives up on that packet. Go to step **3**.
3. (First Fragment)—Prior to giving up in step **2**, the CM sees a grant for this SID that is less than the requested number of minislots. The CM calculates how much MAC information can be sent in the granted number of minislots using the specified burst profile. In the example in FIG. **77**, the first grant can hold 900 bytes after subtracting the POH. Since the fragment overhead (FRAG HDR, FHCS, and FCRC) is 16 bytes, 884 bytes of the original packet can be carried in the fragment. The CM creates a fragment composed of the FRAG HDR, FHCS, 884 bytes of the original packet, and an FCRC. The CM marks the fragment as first and prepares to send the fragment. Go to step **4**.
4. (First Fragment, multiple grant mode)—CM looks to see if there are any other grants of grant pendings enqueued for this SID. If so, the CM sends the fragment with the piggyback field in the FRAG HDR set to zero and awaits the time of the subsequent grant to roll around.—to step **6**. If there are not any grants or grant pendings, go to step **5**.
5. (First Fragment, piggyback mode)—If there are no other grants or grant pendings for this SID in this MAP, the CM calculates how many minislots are required to send the remainder of the fragmental packet, including the fragmentation overhead and physical layer overhead and inserts this amount into the piggyback field of the FRAG HDR. The CM then sends the fragment and starts its ACK timer for the piggyback request. In the example in FIG. **19**, the CM sends up a request for enough minislots to hold the POH plus 150 bytes (1018−884+16). Go to step **6**.
6. (Waiting for Grant). The CM is now waiting for a grant for the next fragment. If the CM's ACK timer expires while waiting on this grant, the CM should send up a request for enough minislots to send the remainder of the fragmented packet, including the fragmentation overhead and physical layer overhead. Go to step **7**.
7. (Receives next fragment grant)—Prior to giving up in step **6**, the CM sees another grant for this SID. The CM checks to see if the grant size is large enough to hold the remainder of the fragmented packet, including the fragmentation overhead and physical layer overhead. If so, go to step **10**. If not, go to step **8**.
8. (Middle Fragment, multiple grant mode)—Since the remainder of the packet (plus overhead) will not fit in the grant, the CM calculates what portion will fit. The CM encapsulates this portion of the packet as a middle fragment. The CM then looks for any other grants or grant pendings enqueued for this SID. If either are present, the CM sends the fragment with the piggyback field in the FRAG HDR set to zero and awaits the time of the subsequent grant to roll around.—go to step **6**. If there are not any grants or grant pendings, go to step **9**.
9. (Middle Fragment, piggyback mode). The CM calculates how many minislots are required to send the remainder of the fragmented packet, including the fragmentation overhead and physical layer overhead and inserts this amount into the piggyback field of the FRAG HDR. The CM then sends the fragment and starts its ACK timer for the piggyback request. Go to step **6**.

Reference is made to FIGS. **78** and **79** for a description of another embodiment of the invention. In this embodiment, there are wireless transmission links between homes **14** and HFC network **1010**. Each of homes **14** is equipped with radio frequency modem (RFM) **2000**. A base station **2002** is in wireless RF contact with RFM's **2000**. The wireless architecture is similar to a cellular phone system. Code division multiple access (CDMA) transmission could be used between RFM's **2000** and base station **2002**. Base station **2002** is connected by a fiber **2004** to a CMTS hub **2006**. Hub **2006** is part of HFC network **1010**. Otherwise the components in FIGS.**78** and **79** are the same, and bear the same reference numerals, as those described in connection with FIGS. **1** and **2**. As illustrated in FIG. **78**, CMTS hub **2006** can be integrated in the same cable system that also services CM's connected by fiber to hub **22**. Thus, upstream and/or downstream channels can be installed in a home without physically laying cable all the way to the home. If desired the downstream channel could be fiber because of the large bandwidth requirement, and the upstream channel could be wireless because there is a smaller bandwidth requirement.

The described functions of cable modems **1046** and RF modems **2000** could be carried out on a single integrated circuit chip as illustrated in FIG. **80**. In this chip the output of an RF transmitter **3001** feeds the upstream channels of HFC network **1010**. The downstream channels of HFC network **1010** feed the input of an RF receiver **3002**. A time division multiple access (TDMA) controller **3004** is connected to the input of the transmitter. The output of receiver **3002** is connected to TDMA controller **3004**. An ethernet

3006 serves as an interface between TDMA controller 3004 and a PC or other binary signal processing device. TDMA controller 3004 could be an application specific circuit or a microprocessor programmed to perform the described CMTS functions, including fragmentation. It is understood that the exemplary data packet fragmentation described herein and shown in the drawings represents only presently desired embodiments of the invention. Indeed various modifications and additions may be made to such embodiments without departing from the spirit and scope of the invention. For example, requests to transmit data from cable modems need not be received by the cable modem termination system and the MAP need not be generated by the cable modem termination system, but rather requests may be received by an autonomous device, which operates independently of the cable modem termination system, and the MAPs may be generated by this or another autonomous device. Thus, these and other modifications and additions may be obvious to those skilled in the art and may be implemented to adapt the present invention for use in a variety of different applications. The described fragmentation capability can be enabled or disabled in the cable modems on a selective basis. Specifically, when a cable modem transmits a registration message to the CMTS at the time that the cable modem enters service, the acknowledging response of the CMTS includes a signal that either enables or disables fragmentation. If fragmentation is enabled the cable modem and the CMTS operate as described above to fragment data to be transmitted upstream. If fragmentation is disabled the cable modem only transmits data to the headend if the granted amount of bandwidth is the same as or larger than the bandwidth required to transmit the data. Alternatively, if fragmentation is disabled the CMTS only transmits a grant if the requested bandwidth is the same as or smaller than the bandwidth available for transmission to the headend.

Method and Apparatus for Reducing Noise in a Bidirectional Cable Transmission System

In FIG. 81 a bidirectional radio frequency (RF) cable transmission system has a large number of user terminals connected by a cable network to a headend or a cable modem termination system (CMTS). Cable modems (CM1, CM2, . . . CMn) are located at the respective user terminals. An RF transmitter 331 and an RF receiver 335 are located at the headend. RF transmitter 331 is connected by a number of downstream channels 338 of the cable network to cable modems CM1, CM2 . . . CMn. Cable modems CM1, CM2, . . . CMn are connected by upstream channels 339 to RF receiver 335. As represented by blocks H1(f), H2(f), . . . Hn(f), the individual upstream channels 339 are impaired by user specific noise associated with the respective cable modems such as multi-path reflections and the like. In addition, as represented by a summing junction 347, upstream channels 339 are also impaired by common noise such as, ingress noise, during upstream transmission. The invention reduces the common noise symbolized by summing junction 347 and the individual noise symbolized by H1(f), H2(f), ... Hn(f).

As shown in FIG. 82, RF receiver 335 at the headend has a down converter 349 that shifts the RF signal on the selected upstream channel 339 to baseband. After passing through a matched filter 350, the baseband signal is coupled to an adaptive notch filter 351, which is described in more detail below in connection with FIG. 83. Adaptive notch filter 351 is coupled by a demodulator 352 to a generalized decision feedback equalizer (DFE) 353, which is described in more detail below in connection with FIG. 84. The output of DFE 353 is connected to a slicer 354, which determines the quantized value of the signal. The output of slicer 354 is fed to forward error correction (FEC) circuitry 355. The output of FEC 355 is the transmitted data in binary form.

As illustrated in FIG. 83, adaptive notch filter 351 is a linear monic filter having a fixed main tap 356 represented by the coefficient b0 and a plurality of successive variable taps 357 represented by coefficients b1, b2, . . . , bn. Taps 356 and 357 feed a summing junction 358.

As illustrated in FIG. 84, generalized DFE 353 comprises a feed-forward equalizer 359 and a feedback equalizer 365 that feed a summing junction 366. The output of summing junction 366 is coupled to a slicer 367, which determines the quantized value of the signal applied to decision feedback equalizer 353. The output of slicer 367 is coupled to the input of feedback equalizer 365 and to FEC 355 (FIG. 82). As described in more detail below, generalized DFE 353 operates in a special way. That is, rather than obtaining the coefficents of the feedforward and feedback parts together, the coefficients of the feed-forward and feedback parts are trained in a sequential manner. Also, the feedforward equalizer can take a linear equalizer structure where the main tap location can be any tap location.

As illustrated in FIG. 85, each cable modem has a receiver 368 that processes RF signals transmitted on a selected one of downstream channels 338 and a transmitter 369 that sends RF signals to the headend on a selected one of upstream channels 339. A transmit equalizer 371 is connected in series between a modulator 370 inside transmitter 369 and upstream channels 339. As described in more detail below, the coefficients for equalizer 371 are transmitted to the cable modem on one of the downstream channels 338 and coupled by downstream receiver 368 to transmit equalizer 371. Transmit equalizer 371 is also a linear equalizer structure corresponding to the feedforward equalizer 359 at the headend receiver.

FIG. 86 illustrates the TDMA time slots in a selected one of upstream channels 339. As shown, there are ranging slots 372, request slots 373, and user data slots 374. There are also idle slots 375, which are unique to the invention. The timing and frequency of slots 372–375 are determined at the headend which sends out TDMA control messages on one of downstream channels 338 assigned to system management to establish a framing structure for the upstream channels. These TDMA control messages include information about the type of slot, i.e., ranging, request, data, or idle and the service identifier (SID) which uniquely identifies each cable modem. For a more detailed description of the upstream channel management function, reference is made to the above section "Cable Modem Termination System Upstream MAC/PHY Interface".

FIG. 87 illustrates a method for operating the apparatus in FIGS. 82–85 so as to cancel common noise such as ingress and to compensate for individual noise such as multipath noise, that impairs upstream channels 339. As depicted by a block 376, an idle slot is created by the headend when the system is powered up and thereafter from time to time whenever it is desired to re-adjust notch filter 351 (FIG. 82). The idle slot is part of the upstream TDMA framing structure created at the headend and transmitted to each cable modem on one of downstream channels 338 assigned to system management. The idle slot identifies no cable modem SID and contains no upstream signal. It can be created simply by assigning the SID of a unicast (or reservation) slot to a null value. Since the idle slot is created as part of the TDMA framing structure, its time of arrival at the headend is known.

In essence, the idle slot is a known time period during which there is no signal on upstream channels **339**. Any energy received by receiver **335** at the headend during this time period represents common noise such as ingress noise. Instead of using the described idle slots to create quiet periods on the upstream channels for the purpose of sensing and rejecting common noise, the headend MAC could control the cable modems by means of other types of downstream messaging to create known upstream quiet periods. In any case, since the headend MAC creates the quiet periods as part of the uptream TDMA framing structure, the MAC can control the timing of the process of adjusting notch filter **351** and FBE **365** to coincide with the quiet periods.

In FIG. **88**A, this common noise is illustrated as a noise spike **380** superimposed on the frequency response **381** of the selected channel. As depicted by a block **377**, during the idle slot of each of upstream channels **339**, the coefficients of adaptive notch filter **351**, B**1**, B**2** . . . Bn−1, are adjusted to minimize its output by for example an LMS process. The value of main tap B**0** is fixed. This tends to cancel the common noise as illustrated by a notch **382** in FIG. **88**B, but introduces signal distortion into the frequency response. As depicted by a block **378**, the coefficients of notch filter **377**, namely, B**1**, B**2** . . . Bn−1, are impressed upon FBE **365** without change to compensate for the distortion introduced by notch filter **351**. FIG. **88**C illustrates the resulting frequency response at the output of DFE **353** with a narrow sharp notch **383** that rejects the common noise. FIG. **89**A represents a typical spread of signal values in a 16-QAM constellation before common noise rejection by notch filter **351** and FBE **365**. FIG. **89**B represents the after case. As depicted by a block **379**, the coefficients of notch filter **351** and FBE **365** are frozen until next time that an idle slot is created by the headend so the described apparatus can take into account changes in the common noise in upstream channel **339**. During the initial setup at a particular RF frequency chosen by the down converter **349** and when the settings of adaptive notch filter **351** are updated the corresponding coefficients of notch filter **351**, namely, B**1**, B**2**, . . . Bn−1, for the selected channel are recovered and impressed upon notch filter **351** and FBE **365**. As a result, adaptive notch filter **351** and FBE **365** cancel common noise in the selected channel during the data transmission interval that follows. It should be noted that this common noise cancellation is accomplished without a training sequence and applies equally to each cable modem.

As depicted by a block **384**, FFE **359** is adjusted during the ranging process in preparation for upstream data transmission from each cable modem. The common noise has been canceled prior to this adjustment. When the headend assigns a ranging slot to a particular cable modem, the modem sends a packet of ranging data, including a training sequence to the headend. The training sequence is used to derive coefficients for FFE **359**. These coefficients represent the frequency shaping required to compensate for the individual noise of the particular cable modem transmitting the ranging packet, i.e., the frequency shaping required to provide a flat frequency response at the output of DFE **353**. As depicted by a block **385**, the calculated coefficients are transmitted with the SID of the cable modem on the one of downstream channels **338** assigned to system management. These coefficients are applied to transmit equalizer **371** at the selected cable modem. It should be noted that since the common noise has been canceled prior to the adjustment, the coefficients applied to transmit equalizer **371** do not reflect any common noise rejection. Before the data is transmitted by the cable modem over the assigned one of upstream channels **339**, FFE **359** is reset so the taps, except for the main tap, are set to zero. As a result, the apparatus compensates for individual noise by pre-equalization at the transmitting cable modem, while FFE **359** introduces no compensation except simple tracking.

It should be noted that DFE **353** operates sequentially in the practice of the invention. First, FBE **365** is set to compensate for the distortion introduced by notch filter **351** and frozen until it is reset. Then, FFE **359** is used to derive the coefficients for transmit equalizer **371**, after which it is reset.

In an alternative embodiment, notch filter **351** oversamples the signal at the output of matched filter **350**. Instead of taps spaced apart in time by the reciprocal of the baud rate of the received signal [T, 2T, 3T, . . . , T(n−1)] the taps of notch filter **351** are spaced apart in time by the reciprocal of a multiple of the symbol rate, e.g., four (4) times. In this case, only the values of the taps spaced apart in time by the reciprocal of the baud rate [T, 2T, 3T, . . . , T(n−1)] can be adjusted as described above to minimize the output of notch filter **351** and the taps (both real and imaginary) between those spaced apart by the reciprocal of the baud rate (both real and imaginary) are set to zero. The main tap of notch filter **351** is fixed at real part equals one (1) and imaginary part equals zero. The tap values of FBE **365** (spaced apart in time by the reciprocal of the baud rate) are directly mapped to the adjusted tap values of notch filter **351**. The over sampling of notch filter **351** facilitates acquisition of the burst signals by demodulator **352**.

Reference is made to FIG. **90**A for a diagram of common noise (such as ingress) spikes **386** and **387** superimposed on the frequency response of one of upstream channels **339**. The effect of multi-path is shown by a sag **388** near the middle of the frequency response. FIG. **90**B represents the pre-equalizing effect introduced by transmit equalizer **371** at the transmitting cable modem. This pre-equalization compensates for sag **388***a* in FIG. **90**A and thus flattens the overall frequency response of the signal arriving at receiver **335**. It also adds notches **386***a* and **387***a* at the frequencies where ingress noise is present.

Referring to FIG. **90**B, the adaptive notch filter coefficients can be used via FFT processing for dynamic channel allocation with ingress cancellation to measure the inverse of the channel spectrum or to find the location of the ingress noise. This facilitates in estimating the channel quality for selecting an appropriate channel and bandwidth, as shown in FIG. **33**.

As used in the claims herein, the term "idle slot" is a time period known to the headend in which no signal is being transmitted in the upstream channel. Consequently, any energy detected in the channel at the headend during this time period is common noise introduced into the cable network.

The described embodiments of the invention are only considered to be preferred and illustrative of the inventive concept; the scope of the invention is not to be restricted to such embodiments. Various and numerous other arrangements may be devised by one skilled in the art without departing from the spirit and scope of this invention.

The invention claimed is:

1. A cable modem termination system for a cable plant comprising:

a burst receiver for processing data signals having physical layer parameters that control the manner in which the data signals are transmitted on an upstream channel of the cable plant;

a transmitter for sending messages on a downstream channel of the cable plant to cable modems; and

a monitoring circuit for collecting packet based statistics representative of the channel quality of the upstream channel, the monitoring circuit sending a message to the transmitter for the cable modems to change a physical layer parameter responsive to the collected statistics and to the burst receiver to process data signals based on the changed physical layer parameter, wherein channel quality is an ability of a channel to transmit data reliably thereon, such that a higher quality channel transmits data reliably at a higher data rate than a lower quality channel.

2. The cable modem termination system of claim **1**, in which the monitoring circuit collects statistics about the number of packets and the number of undetected packets.

3. The cable modem termination system of claim **1**, in which the monitoring circuit collects statistics about the number of packets and the number of packets without a unique word.

4. The cable modem termination system of claim **1**, in which the monitoring circuit collects statistics about the number of packets and the number of packets with corrected errors.

5. The cable modem termination system of claim **1**, in which the monitoring circuit collects statistics about the number of packets and the number of packets with uncorrectable errors.

6. The cable modem termination system of claim **1**, in which the monitoring circuit collects statistics about the number of forward error correction (FEC) blocks and the number of FEC blocks with corrected errors.

7. The cable modem termination system of claim **1**, in which the monitoring circuit collects statistics about the number of forward error correction (FEC) blocks and the number of FEC blocks with uncorrectable errors.

8. The cable modem termination system of claim **1**, **2**, **3**, **4**, **5**, **6**, or **7**, in which the monitoring circuit sends a message to change the type of modulation.

9. The cable modem termination system of claim **1**, **2**, **3**, **4**, **5**, **6**, or **7**, in which the monitoring circuit sends a message to change the coding gain.

10. The cable modem termination system of claim **1**, **2**, **3**, **4**, **5**, **6**, or **7**, in which the monitoring circuit sends a message to change the symbol rate.

11. The cable modem termination system of claim **1**, **2**, **3**, **4**, **5**, **6**, or **7**, in which the monitoring circuit sends a message to change the guard time.

12. The cable modem termination system of claim **1**, **2**, **3**, **4**, **5**, **6**, or **7**, in which the monitoring circuit sends a message to change the constellation size of the modulation.

13. The cable modem termination system of claim **1**, **2**, **3**, **4**, **5**, **6**, or **7**, in which the monitoring circuit sends a message to change the physical layer parameters in real time.

14. The cable modem termination system of claim **1**, **2**, **3**, **4**, **5**, **6**, or **7**, in which the monitoring circuit sends a message to change the frequency of the carrier.

15. The cable modem termination system of claim **1**, **2**, **3**, **4**, **5**, **6**, or **7**, in which the monitoring circuit sends a message to change the frequency of the carrier in a non-uniform manner.

16. A headend terminal for a bidirectional asymmetric, transmission system having a downstream channel that broadcasts data from the headend terminal to a plurality of subscriber terminals and an upstream channel that unicasts data from the individual subscriber terminals to the headend terminal, the headend terminal comprising:

a burst receiver for processing data signals having physical layer parameters that control the manner in which the data signals are transmitted on the upstream channel;

a transmitter for sending messages on the downstream channel; and

a monitoring circuit for collecting statistics about the data signals transmitted on the upstream channel, the statistics representative of the channel quality of the upstream channel, the monitoring circuit sending a message to the transmitter for the cable modems to change a physical layer parameter responsive to the collected statistics and to the burst receiver to process data signals based on the changed physical layer parameter, wherein channel quality is an ability of a channel to transmit data reliably thereon, such that a higher quality channel transmits data reliably at a higher data rate than a lower quality channel.

17. A method for transmitting data over a cable system in an upstream direction to a headend from a plurality of subscriber stations located at different distances from the headend such that the transmission paths to the headend are different, the method comprising the steps of:

establishing an upstream channel from the subscriber stations to the headend;

monitoring at the headend the channel quality of the upstream channel;

establishing a downstream channel from the headend to the subscriber stations;

transmitting to the subscriber stations over the downstream channel a command to change the mode of transmission to the headend over the upstream channel if the monitored channel quality fails to meet a prescribed threshold level;

receiving the command at the subscriber stations; and

transmitting data over the upstream channel from the subscriber stations to the headend in accordance with the changed mode of transmission after receipt of the command, wherein channel quality is an ability of a channel to transmit data reliably thereon, such that a higher quality channel transmits data reliably at a higher data rate than a lower quality channel.

18. The method of claim **17**, in which the monitoring step monitors the noise power on the upstream channel.

19. The method of claim **17**, in which the monitoring step monitors the signal-to-noise ratio of a signal received on the upstream channel.

20. The method of claim **17**, in which the monitoring step monitors the channel statistics of the upstream channel.

21. The method of claim **20**, in which the monitored statistics comprise the number of undetected packets.

22. The method of claim **20**, in which the monitored statistics comprise the number of packets with corrected errors.

23. The method of claim **20**, in which the monitored statistics comprise the number of packets with uncorrected errors.

24. The method of claim **20**, in which the monitored statistics comprise the number of forward error correction (FEC) blocks with corrected errors.

25. The method of claim **20**, in which the monitored statistics comprise the number of forward error correction (FEC) blocks with uncorrected errors.

26. The method of claim **20**, in which the monitored statistics comprise a combination of two or more of the

following: the number of undetected packets, the number of packets with corrected errors, the number of packets with uncorrected errors, the number of forward error correction (FEC) blocks with corrected errors, and the number of FEC blocks with uncorrected errors.

27. The method of claim **17**, in which the command transmitting step comprises transmitting a command to change the type of modulation from a first type that can reliably transmit at a high bit rate over a high quality channel to a second type that can reliably transmit at a lower bit rate over a lower quality channel if the monitored channel quality at the first type of modulation fails to meet the prescribed threshold level.

28. The method of claim **27**, in which the first type of modulation is quadrature amplitude modulation (QAM) and the second type of modulation is quadrature phase shift keying (QPSK).

29. The method of claim **27**, in which the data transmitting step transmits data to the headend in accordance with the second type of modulation after the command.

30. The method of claim **29**, in which the command transmitting step additionally comprises transmitting a command to change the position of the channel in the spectrum if the monitored channel quality at the second type of modulation fails to meet the prescribed threshold level.

31. The method of claim **30**, in which the command transmitting step additionally comprises transmitting a command to change one or more physical layer parameters.

32. The method of claim **17**, in which the step of establishing an upstream channel establishes a channel that has a narrow bandwidth and the step of establishing a downstream channel establishes a channel that has a broad bandwidth.

33. The method of claim **17**, additionally comprising the step of adjusting a notch filter at the headend to establish coefficients that reject one or more bands of common noise.

34. The method of claim **33**, in which the monitoring step comprises Fast Fourier Transform (FFT) processing of the filter coefficients to determine the inverse of the channel spectrum.

35. The method of claim **34**, in which the command transmitting step transmits a command to change the position of the channel in the spectrum to avoid ingress noise.

36. A cable modem termination system having an upstream channel shared among a plurality of cable modems and a burst receiver connected to the upstream channel to process physical layer signals transmitted on the upstream channel, a monitoring circuit for collecting packet based statistics representative of the channel quality of the upstream channel, the monitoring circuit comprising an input for receiving the physical layer signals from the burst receiver, means for sensing parameters that control the manner of transmission of the physical layer signals, and a plurality of counters for collecting the sensed physical layer parameters, wherein channel quality is an ability of a channel to transmit data reliably thereon, such that a higher quality channel transmits data reliably at a higher data rate than a lower quality channel.

37. The cable modem termination system of claim **36**, in which the monitoring circuit collects statistics about the number of packets and the number of undetected packets.

38. The cable modem termination system of claim **36** or **37**, in which the monitoring circuit collects statistics about the number of packets and the number of packets without a unique word.

39. The cable modem termination system of claim **36** or **37**, in which the monitoring circuit collects statistics about the number of packets and the number of packets with corrected errors.

40. The cable modem termination system of claim **36** or **37**, in which the monitoring circuit collects statistics about the number of packets and the number of packets with uncorrectable errors.

41. The cable modem termination system of claim **36** or **37**, in which the monitoring circuit collects statistics about the number of forward error correction (FEC) blocks and the number of FEC blocks with corrected errors.

42. The cable modem termination system of claim **36** or **37**, in which the monitoring circuit collects statistics about the number of forward error correction (FEC) blocks and the number of FEC blocks with uncorrectable errors.

* * * * *