UNITED STATES PATENT AND TRADEMARK OFFICE

BEFORE THE PATENT TRIAL AND APPEAL BOARD

SAMSUNG ELECTRONICS AMERICA, INC.,
SAMSUNG ELECTRONICS CO., LTD.,
Petitioners,

v.

COLLISION COMMUNICATIONS, INC.,
Patent Owner.

Case No. IPR2024-01249
U.S. Patent No. 6,947,505

DECLARATION OF PAUL S. MIN, PH.D.
IN SUPPORT OF PETITION FOR *INTER PARTES* REVIEW OF
U.S. PATENT NO. 6,947,505

TABLE OF CONTENTS

I. Introduction 1

II. Qualifications and Background 1

III. Legal Standards 6

A. Claim Construction 7

B. Anticipation Under 35 U.S.C. § 102 7

C. Obviousness Under 35 U.S.C. § 103 8

IV. The ’505 patent 11

A. Background of Technology 11

B. Overview of the ’505 patent (Ex. 1001) 15

C. Prosecution History of the ’505 patent 18

D. Person of Ordinary Skill in the Art 18

V. Claim Construction of Terms of the ’505 patent 20

VI. Overview of Prior Art 28

1. Hottinen (Ex. 1004) 28

2. Zimmerman (Ex. 1005) 30

3. Lilleberg (Ex. 1006) 32

VII. Summary of Opinions on Unpatentability 32

A. Ground 1: Claims 1, 3-5, and 7-9 are Rendered Obvious by Hottinen in view of Lilleberg 33

1. Motivation to Combine 33

2. 1pre: In a multi-user detection system in which interfering signals are purposely allowed to exist, ... 38

4. Claim 3: The parameter estimation unit of claim 1, wherein the multi-user detection system includes providing an acquisition channel, and wherein the first derived estimated channel transfer function is derived from acquisition channel parameters. 45

5. Claim 4: The parameter estimation unit of claim 1, wherein said multi-user detection system includes a tracking unit for acquired signals, and wherein in the presence of a new signal in the acquisition channel of said parameter estimation unit estimates the channel transfer function prior to signal switching from an acquisition channel to the traffic channel, with said parameter estimation unit parameters being passed to said tracking unit thereafter. 47

6. Claim 5: The parameter estimation unit of claim 1, and further including a traffic channel, and wherein for said traffic channel phase is tracked without utilization of the estimates from the acquisition channel. 50

7. Claim 7: The parameter estimation unit of claim 1, wherein after initial estimate generation, said multi-user detection system simultaneously tracks all signals in a traffic channel. 52

8. Claim 8: The parameter estimation unit of claim 7, wherein said simultaneous tracking includes blocks for parallel recreation of the training signal portions of the traffic channel signal, each parallel processing block isolating a different signal in said traffic channel. 53

9. *Claim 9* 56

B. Ground 2: Claims 1, 3, 4, 5, 7, 8, and 9 are Rendered Obvious by Zimmerman in view of Lilleberg 59

1. Motivation to Combine 60

10. Claim 1 65

11. Claim 3 72

12. Claim 4 73

13. Claim 5 76

14. Claim 7 78

15. Claim 8 79

16. Claim 9 82

VIII. Secondary Considerations of Non-obviousness 85

IX. Conclusion 87

I. Introduction

1. I, Paul S. Min, Ph.D., submit this declaration to state my opinions on the matter described below.

2. I have been retained by Petitioners Samsung Electronics Co., Ltd. and Samsung Electronics America, Inc. ("Petitioners"), as an independent expert in this proceeding before the United States Patent and Trademark Office. Although I am being compensated at my usual and customary rate of $500 per hour, no part of my compensation depends on the outcome of this proceeding, and I have no other interest in this proceeding.

3. I understand that this proceeding involves U.S. Patent No. 6,947,505 (the "'505 patent"), and I have been asked to consider the validity of certain claims of the '505 patent based on certain prior art references. I have also been asked to consider the state of the art and prior art available as of September 20, 2000. Based on the prior art discussed in this declaration, it is my opinion that claims 1, 3, 4, 5, 7, 8 and 9 of the '505 patent are unpatentable for the reasons provided below.

II. Qualifications and Background

4. I believe that I am well qualified to serve as a technical expert in this matter based upon my educational and work experience, and specifically, in the field of vehicle electronics and computing devices. My curriculum vitae ("CV") is submitted as Exhibit 1010.

5. Of note, as shown in my CV, I have extensive experience design and implementation of receiver devices to be used in the cellular equipment and the WLAN equipment.

6. I received a B.S. degree in Electrical Engineering in 1982, an M.S. degree in Electrical Engineering in 1984, and a Ph.D. degree in Electrical Engineering in 1987 from the University of Michigan in Ann Arbor. I received several academic honors, including my B.S. degree with honors, a best graduate student award and a best teaching assistant award during my M.S. study, and a best paper award from a major international conference for reporting results from my Ph.D. thesis.

7. After receiving my Ph.D., I worked at Bellcore in New Jersey from August 1987 until August 1990. At Bellcore, I was responsible for evolving the public switched telephone network (POTS) into a multi-services voice and data network that incorporated packet switches, optical technologies, and wireless technologies.

8. In September 1990, I joined the faculty at Washington University in St. Louis. In July 1996, I was promoted to an Associate Professor of Electrical Engineering with tenure. I am currently a Senior Professor at Washington University of the Electrical and Systems Engineering. I have also served as the Chair of the

Graduate Curriculum (2000-2002) and the Chair of the Undergraduate Curriculum (2011-2014) for the Electrical and Systems Engineering department.

9. At Washington University, I have conducted research in communication, computing, and related electronic hardware and software. My research group has pioneered a new paradigm for designing electronic circuits that can alleviate the speed and performance mismatch against optical technology. I have received several grants from the U.S. Federal Agencies, including the National Science Foundation and the Defense Advanced Research Project Agency, and numerous contracts from companies and organizations around the world. Specifically related to the technology matters in this Investigation, I have researched a variety of wireless communication technologies, including CDMA, WCDMA, OFDM, FDD, SC-FDMA, and TDD. I have an extensive background and experience in each of these technologies.

10. As a faculty member at Washington University, I have taught a number of courses in electronics, communication, and computing at both the undergraduate and graduate levels. For example, I have taught communication theory (Washington University ESE 471), transmission and multiplexing (Washington University ESE 571), and signaling and control of communication networks (Washington University ESE 572).

11. I have supervised numerous graduate students, many of whom received a doctoral degree under my guidance. A number of doctoral theses that I have supervised relate specifically to LTE and other cellular technologies. In particular, my students and I have published a number of peer-reviewed articles on resource allocation, scheduling, modulation, mobility management, and multiplexing. Several of these articles received accolades in the field. For example, in 2011, we received a best paper award in 3G WCDMA-related mobility and resource management at the prestigious Mobility 2011 international conference.

12. In addition to my responsibilities as a university faculty member, I have founded two companies. In May 1997, I founded MinMax Technologies, Inc., a fabless semiconductor company that developed switch fabric integrated circuit chips for the Internet. In March 1999, I founded Erlang Technology, Inc., a fabless semiconductor company that focused on the design and development of integrated circuit chips and software for the Internet. One of Erlang's products received a best product of the year award in 2004 from a major trade journal for the electronics industry.

13. Outside my own start-up companies, I have also served in various technology and business advisor roles for other companies and organizations around the world. I was the main technical author for one of two winning proposals to the

Korean government for CDMA wireless service licenses (1996). I was responsible for designing a commercial scale IS-95 CDMA cellular network, which I understand to be one of the earliest such networks deployed in the world. I worked with numerous engineers and scientists around the world to implement this commercial-scale cellular network before IS-95 CDMA was widely accepted. This provided me with extensive insight into various components of CDMA technology, which by and large are used in WCDMA network. I have also been involved in a semiconductor company that specializes in semiconductor memories such as flash EEPROMs as a board member and as a technical advisor (2007-2011).

14. I am a named inventor on eleven U.S. patents, many of which are directly related to resource allocation, packet processing, and network designing. I have extensively published technical papers in international conferences and journals, technical memoranda and reports, and given a number of seminars and invited talks. Many of these papers are specifically within the context of the 3GPP standard. I have organized several international conferences and served as an international journal editor.

15. I am a member of and have been actively involved in a number of professional organizations. For example, I have served as the Chair of the Saint Louis Section of the IEEE with more than 3,000 members (2014), and a member of

the Eta Kappa Nu Honor Society for electrical engineers. I have also been an Ambassador of the McDonnell International Scholars Academy (2007-2013).

16. In my nearly 30 years of experience with telecommunications technology, I have acquired significant knowledge about telecommunications systems industry standards, standard setting organizations such as 3GPP, and the rules and document policies that those organizations have in place to develop industry standards.

III. Legal Standards

17. In forming my opinions and considering the subject matter of the ’268 patent and its claims in light of the prior art, I am relying on certain legal principles that counsel in this case explained to me. My understanding of these concepts is summarized below.

18. I understand that the claims define the invention. I also understand that an unpatentability analysis is a two-step process. First, the claims of the patent are construed to determine their meaning and scope. Second, after the claims are construed, the content of the prior art is compared to the construed claims.

19. I understand that a claimed invention is only patentable when it is new, useful, and non-obvious in light of the “prior art.” That is, the invention, as defined by the claims of the patent, must not be anticipated or rendered obvious by the prior art.

A. Claim Construction

20. I understand that the United States Patent and Trademark Office interprets claim terms in an *inter-partes* review proceeding under the same claim construction standard that is used in a United States federal court. I understand that under this standard, the meaning of claim terms is considered from the viewpoint of one of ordinary skill in the art at the time of the alleged invention.

21. I understand that claim terms are generally given their ordinary and customary meaning as understood by one of ordinary skill in the art in light of the specification and the prosecution history pertaining to the patent. I understand, however, that claim terms are generally not limited by the embodiments described in the specification.

22. I understand that in addition to the claims, specification, and prosecution history, other evidence may be considered to ascertain the meaning of claim terms, including textbooks, encyclopedias, articles, and dictionaries. I have been informed that this other evidence is often less significant and less reliable than the claims, specification, and prosecution history.

B. Anticipation Under 35 U.S.C. § 102

23. I understand that under 35 U.S.C. § 102, a patent claim is invalid if its subject matter was patented or described in a printed publication before the effective filing date of the claimed invention. I have been told that this is referred to as

invalidity by anticipation. I have been told that a patent claim is anticipated under § 102 if a single prior art reference discloses all limitations of the claimed invention.

C. Obviousness Under 35 U.S.C. § 103

24. I understand that a patent claim is invalid as obvious if the claimed invention would have been obvious to a person of ordinary skill in the art ("POSITA") at the time the claimed invention was made. This means that even if all of the elements of the claim cannot be found in a single prior art reference that would anticipate the claim, a person of ordinary skill in the field who knew about all the prior art would have come up with the claimed invention. I understand that in an obviousness determination, the person of ordinary skill in the art is presumed to have knowledge of all material prior art. I understand that whether a claim is obvious is based upon the determination of several factual issues.

25. I understand that obviousness is a determination of law based on underlying determinations of fact. I understand that these factual determinations include the scope and content of the prior art, the level of ordinary skill in the art, the differences between the claimed invention and the prior art, and secondary considerations of non-obviousness.

26. In considering obviousness, I understand that one must determine the scope and content of the prior art. I understand that, in order to be considered as prior art to a patent being considered, a prior art reference must be reasonably related to

the claimed invention of that patent. A reference is reasonably related if it is in the same field as the claimed invention or is from another field to which a person of ordinary skill in the art would look to solve a known problem.

27. I understand that one must determine what differences, if any, existed between the claimed invention and the prior art.

28. I understand that a patent claim composed of several elements is not proved obvious merely by demonstrating that each of its elements was independently known in the prior art. In evaluating whether such a claim would have been obvious, one may consider whether a reason has been identified that would have prompted a person of ordinary skill in the art to combine the elements or concepts from the prior art in the same way as in the claimed invention. There is no single way to define the line between true inventiveness on the one hand (which is patentable) and the application of common sense and ordinary skill to solve a problem on the other hand (which is not patentable). For example, market forces or other design incentives may be what precipitated a change, rather than true inventiveness.

29. I understand that whether a prior art reference renders a patent claim unpatentable as obvious is determined from the perspective of a person of ordinary skill in the art at the time of the alleged invention. I have been told that there is no requirement that the prior art contain an express suggestion to combine known

elements to achieve the claimed invention, but a suggestion to combine known elements to achieve the claimed invention may come from the prior art, as filtered through the knowledge of one skilled in the art. In addition, I have been told that the inferences and creative steps a person of ordinary skill in the art would employ are also relevant to the determination of obviousness.

30. I understand that there is no rigid rule that a reference or combination of references must contain a "teaching, suggestion, or motivation" to combine references. But I also understand that the "teaching, suggestion, or motivation" test can be a useful guide in establishing a rationale for combining elements of the prior art. I have been told that this test poses the question as to whether there is an express or implied teaching, suggestion, or motivation to combine prior art elements in a way that realizes the claimed invention, and that it seeks to counter impermissible hindsight analysis.

31. I understand that one may consider, e.g., whether (1) the change was merely the predictable result of using prior art elements according to their known functions, or whether it was the result of true inventiveness; (2) there is some teaching or suggestion in the prior art to make the modification or combination of elements claimed in the patent; (3) the claimed innovation applies a known technique that had been used to improve a similar device or method in a similar way; (4) the

claimed invention would have been obvious to try, meaning that the claimed innovation was one of a relatively small number of possible approaches to the problem with a reasonable expectation of success by those skilled in the art; (5) the invention merely substituted one known element for another known element in order to obtain predictable results; (6) the invention merely applies a known technique to a known device, method, or product to yield predictable results; or (7) known work in the field may have prompted variations of use of the same inventions in the same or different fields due to market forces or design incentives that would have been predictable to a person of ordinary skill in the art.

32. I understand that any assertion of secondary considerations of non-obviousness must be accompanied by a nexus between the merits of the invention and the evidence offered.

IV. <u>The ’505 patent</u>

A. Background of Technology

33. I first begin with a summary of the technology involved with the ’505 patent. In describing some of the basic concepts, I refer to a well-known text regarding wireless communications by Sergio Verdú: “Computational Complexity of Optimum Multiuser Detection,” Algorithmica (1989) (Ex. 1009).

34. The ’505 patent relates to MUD. MUD techniques have been known for decades, and documented since at least the 1980s. Generally speaking, a MUD

system allows users to transmit information over a shared communication path or channel. The users' information is transmitted as interfering signals[1] over the shared communication path or channel. As these signals are interfering, the receiver of the signals must differentiate the signals to correlate them with each user. MUD detects the signals for each user by demodulating the interfering signals using signal parameters (*e.g.*, signal phase, power, time delay, frequency, or code) related to each user, even if there are high levels of noise and interference. Conventional MUD techniques may compare at least a subset of the signal's detected parameters to one or more known parameters for each user's signal to provide an estimate identifying the signal for each user, which is known as parameter estimating. Once the signal parameters are estimated, various well-known MUD techniques may be used to separate the primary signal from the interfering signals.

35. One early description of MUD is in a paper by Sergio Verdu titled "Computational Complexity of Optimum Multiuser Detection," Algorithmica (1989) (Ex. 1009). Even by 1989, MUD was well-known for detecting signals for each user in a multi-user system. For example, Verdu described MUD using

[1] Interfering signals are signals that suffer from interference from another signal that overlaps in phase, frequency, time, or power. Interfering signals may include unwanted noise or intentionally overlapping signals from multiple sources. Interference in a received signal causes the primary signal's parameters to be obscured by the interfering signals.

parameter estimating as "[t]he optimum multiuser receiver can be viewed as a bank of single-user detectors followed by a common algorithm that selects the most likely transmitted symbols." *Id*., 304.

36. MUD has been used in many familiar wireless technologies that require sending multiple user data streams over a single signal. Indeed, since the 1980s, multiuser detection has been implemented in cellular networks, satellite communication, high-speed data transmission lines, digital radio/television broadcasting, fixed wireless local loops, and multitrack magnetic recording. All of these communication systems are subject to multiaccess interference and need a detector to determine the user for the data transmitted on the shared network. Ex. 1008, xix.

37. For example, Qualcomm pioneered the use of Code-Division Multiple-Access ("CDMA") technology in the 1990s. In the CDMA cellular networks, each user is assigned a signature waveform that can be used to uniquely extract and identify that user's signal at the receiver. However, performance degrades as the number of concurrent users increases. It was well known that multi-user detection could be used in CDMA receivers to improve performance and reduce interference even for large numbers of users. *Id*.

38. Another system pioneered by Qualcomm in the 1990s was Frequency Division Multiplexing or Frequency Division Multiple Access ("FDMA"). In FDMA systems, a different carrier frequency is assigned to each user in a network with a shared communication channel so that the resulting signals and spectra do not overlap. *Id*. This is shown below:

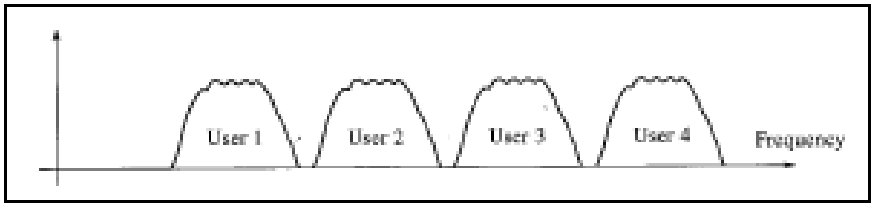

39. As shown in the above figure, each user has a signal parameter based on carrier frequency. The receiver can use this carrier frequency to demodulate the signal and correlate it to the user.

40. Yet another system in use in the 1990s was Time Division Multiplexing ("TDMA") systems. In such systems, *time* is partitioned into slots assigned to each incoming digital stream in round-robin fashion and demultiplexing is carried out by simply switching on to the received signal at the appropriate times. Time division can be used not only to multiplex collocated message sources but also by geographically separated users who have the ability to maintain time-synchronism. This is shown below:

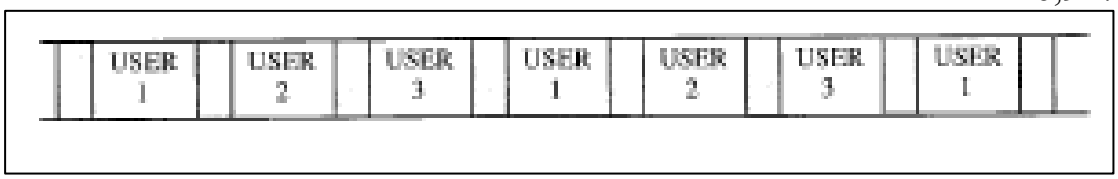

41. As shown in the above figure, each user has a signal parameter based on time division. The receiver can use this time division to demodulate the signal and correlate it to the user.

42. In the above CDMA, FDMA and TDMA systems, it was critical to correlate data streams to users. All of these systems employed MUD, and specifically, utilized parameters to identify the user that corresponds to the data sent over the shared channel. All of these systems used signal processors that would identify the signal parameters to estimate the signal and separate the signal from the interfering signals. Given bandwidth constraints, security concerns, and possible interference, it was well-known in the 1990s to use parameter estimating to identify and separate the user's signal from interfering signals and noise. For example, FDMA and TDMA were well-known multiplexing schemes that would provide parameters for each signal that could be used to estimate the signal and separate it. Ex. 1009, 304. Solutions to the problem of providing dynamic or realtime parameter estimates were well-known at the time of the '505 patent's alleged invention.

B. Overview of the '505 patent (Ex. 1001)

43. The ’505 patent is directed to a MUD system that uses a parameter estimator to remove interfering signals at the receiver. Ex. 1001, Abstract. As the ’505 patent admits, parameter estimators were already well-known for performing signal separation in MUD systems. *Id*., 1:17-31. The prior art MUD systems used signal parameters to separate the signals by using the “channel transfer function comprised of the received power, the phase of the oscillator which generated each received signal, the timing offset relative to the base station clock, any frequency offset of the carrier, and the structure of the multipath replicas.” *Id*., 1:27-31. The ’505 patent admits that the prior art systems performed parameter estimation and signal separation serially, so “there are blanks or blackout periods at which time some of the simultaneously-occurring signals are being ignored or are not being tracked.” *Id.*, 1:55-57.

44. The ’505 patent does not purport to invent MUD. Instead, the ’505 patent purports to introduce a multi-user system that performs parameter estimation and signal separation by “dynamically adapt[ing] to changing signals.” *Id.*, 1:58-61. The ’505 patent notes that “various procedures in the open literature and in use today may be used to perform the parameter estimation on the interference-free signal created by this process.” *Id.*, 2:47-50.

45. Figure 1 depicts the claimed apparatus for processing and separating the digital stream from multiple users, where the "parameter estimation unit 20" performs the signal processing and then signal separation is performed by the signal separation unit.

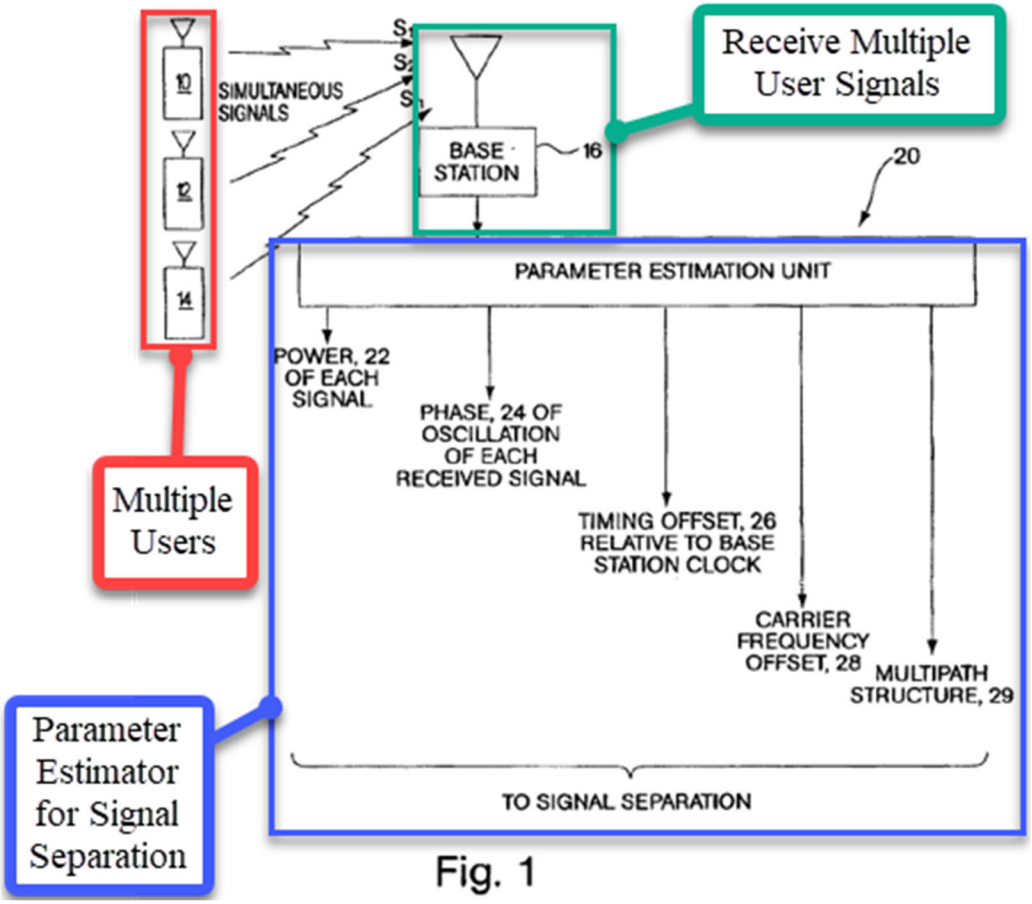

Fig. 1

46. Thus, the '505 purports to introduce a MUD system that performs parameter estimation and signal separation by dynamically adapting to changing signals. Such systems, however, were already well known.

C. Prosecution History of the ’505 patent

47. I have reviewed the prosecution history of the application that led to the ’505 patent. Ex. 1002. I have provided a summary below of the prosecution history.

48. The application that led to the ’505 patent was filed on August 31, 2001, and claimed priority back to a provisional application filed on September 20, 2000.

49. The Examiner rejected original claims 1, 2, 3, 9, and 10 as anticipated by U.S. Patent No. 5,710,797 (“Segal”) and original dependent claims 5, 6, and 7 as obvious over Segal in view of U.S. Patent Application Publication No. 2001/0026599 (“Hoffmann”). Ex. 1002. However, the examiner stated the subject matter of dependent claims 4 and 8 was allowable and that incorporating these limitations in the independent claims would moot the prior art rejections. Ex. 1002. Dependent claim 4 required each received signal to have associated channel transfer functions and “first deriving the estimated transfer function for each of said interfering signals.” *Id*. Dependent claim 8 required the received signals have training portions. *Id*. In response, the applicant amended the independent claims to incorporate the allowable subject matter from both dependent claims. *Id*.

50. The Examiner then issued a notice of allowance without providing specific reasons for allowance.

D. Person of Ordinary Skill in the Art

51. I am informed that patentability must be analyzed from the perspective of "one of ordinary skill in the art" in the same field as the '505 patent at the time of the invention. As previously discussed, the relevant time of invention is the patent's priority date, which is no earlier than September 20, 2000. Moreover, I understand that whether or not a patent application provides "written description" support for patent claims must also be assessed from the perspective of a person of ordinary skill in the art.

52. I am also informed that several factors are considered in assessing the level of ordinary skill in the art, including (1) the types of problems encountered in the art; (2) the prior art solutions to those problems; (3) the rapidity with which innovations are made; (4) the sophistication of the technology; and (5) the education level of active workers in the field.

53. A person of ordinary skill in the art pertinent to the '492 patent would have had at least a bachelor's in EE/CE/CS, physics, or equivalent, and two years of experience with cellular telecommunications, radio-access network architectures, protocols and signal propagation in wireless networks. Additional education could substitute for professional experience and vice versa. A person of ordinary skill in the art would also be able to understand and apply the prior art discussed herein.

54. Although I surpass this definition of one of ordinary skill in the art now and at the priority date of the ’505 patent, my analysis regarding the ’505 patent has been based on the perspective of one ordinary skill in the art as of the priority date of the ’505 patent.

55. I am also familiar with the knowledge of the person of ordinary skill in the art as of the priority date of the ’505 patent. I am able to opine on how the person of ordinary skill in the art would have understood the disclosure and claims of the ’505 patent, the disclosures of the prior art, the motivation to combine the prior art, and what combinations would have been obvious to one of ordinary skill in the art.

V. Claim Construction of Terms of the ’505 patent

56. As I discussed above, I have been informed that for purposes of *inter-partes* reviews, the standard for claim construction of terms within the claims of the patent is the same as that applied in federal district court litigation. I have been asked to assume that the claim terms otherwise have their plain and ordinary meaning to a person skilled in the art in light of the specification and the prosecution history.

57. Except for the terms discussed below, unless otherwise indicated below, at this time I am not aware of any term that requires specific construction for my opinions. To the extent Patent Owner suggests a narrow construction for a term, I reserve the right to respond to those opinions.

(a) "a parameter estimation unit for use in conjunction with a signal separation unit, in which each received signal has associated channel transfer functions, comprising:"

58. Claims 1 and 9 of the '505 patent include the term: "a parameter estimation unit for use in conjunction with a signal separation unit, in which each received signal has associated channel transfer functions, comprising" in the first paragraph of the claims. I understand that this claim term is ***not*** part of the preamble—the preamble is "In a multi-user detection system in which interfering signals are purposely allowed to exist"—but to the extent there is any argument that it is, I understand the preamble is limiting at least because it provides antecedent basis to the "parameter estimation unit" and "associated channel transfer functions" terms that are used in the remainder of the body of the claims and is "essential to understanding the structural limitations" of the parameter estimation unit.

(b) "means coupled to said channel transfer function determining signal processor for providing uninterrupted estimates of the channel transfer function parameters on a real-time basis"

59. Claims 1 and 9 of the '505 patent include the term: "means coupled to said channel transfer function determining signal processor for providing uninterrupted estimates of the channel transfer function parameters on a real-time basis." I understand that this term is written in means-plus-function (MPF) format and should be construed pursuant to 35 U.S.C. §112, ¶6. I understand that Petitioner

proposes the following constructions for this term for purposes of this Petition only and it is the same construction asserted by Patent Owner in the district court litigation. Ex. 1009, 23. In my opinion, the function of this MPF term is "providing uninterrupted estimates of the channel transfer function parameters on a real-time basis." In my opinion, the structure of this MPF term is "parameter tracking unit and equivalents thereof" as disclosed in the following:

> As illustrated at 20, ***a parameter estimation unit is to provide the channel transfer function for each of the interfering users at its output***. In the remainder of this description, the parameters that will be required for signal separation are delineated and specified in place of the more general notion of the channel transfer function, although knowing the channel transfer function is equivalent to knowing these parameters. ***Specifically the parameter estimation unit 20 provides at its output for each interfering user the received power 22, the phase 24 of the oscillator for each of the transmitted signals, the timing offset 26 relative to the base station clock and transmission distance, the carrier frequency offset 28 and the multipath structure 29. Each of the signals in the particular traffic channel here labeled S, S., S. . . . S., are identified in realtime as to their various parameters***. These parameters, when identified, are utilized in the signal separation process such as described in the aforementioned patent application, assigned to the assignee thereof.

EX1001, 5:20-40. This description in the '505 patent refers to elements numbered in Figure 1, below, where the parameter estimation unit and parameter tracking unit is shown:

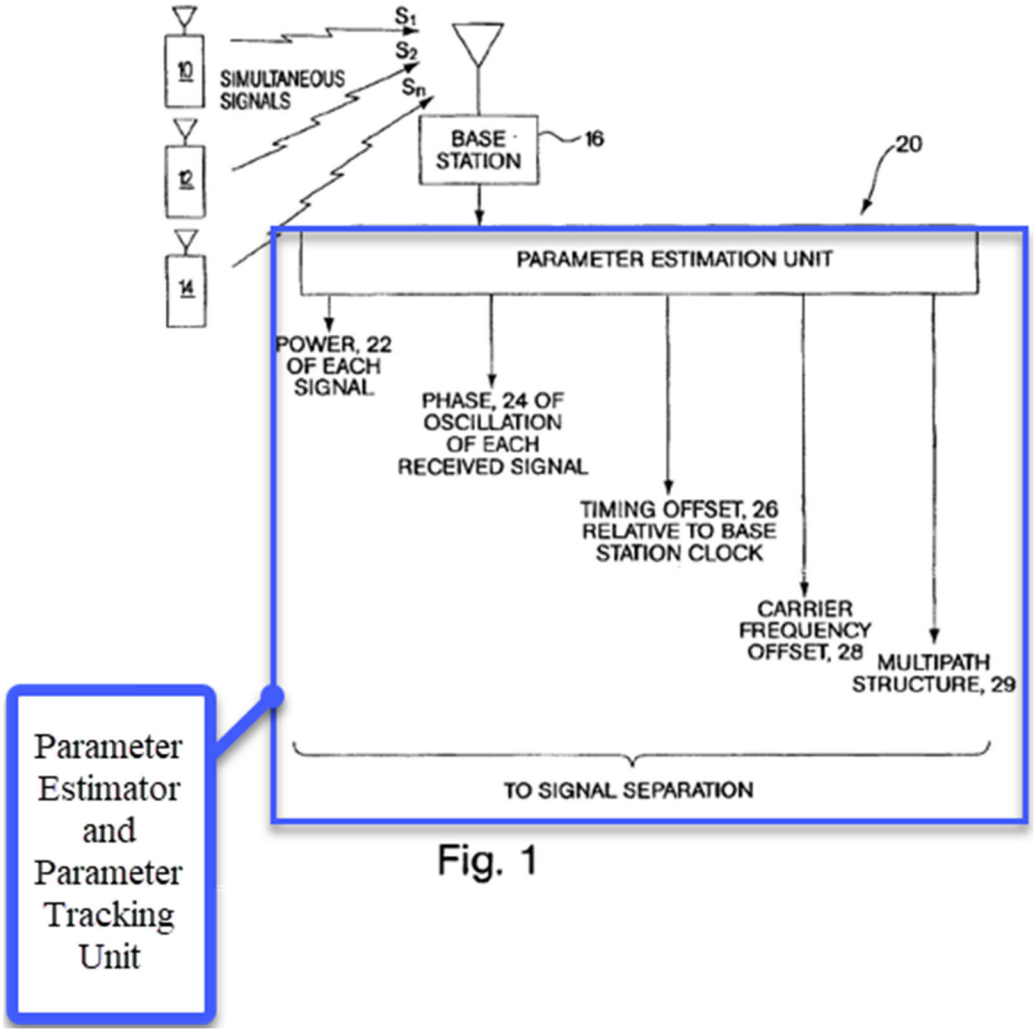

Fig. 1

60. The '505 patent also describes the structure of the parameter tracking unit in the following:

> Also included is a ***unit 48, which estimates and tracks the relative phase of the first signal of the traffic channel 40***. Note that ***power***

> ***tracking, timing offset tracking, phase tracking and multipath structure tracking may be done conventionally*** as described in "Spread Spectrum Communications Handbook', Simon, Omura, Scholtz and Lebatt, McGraw Hill, Inc. 1994, or in any other manner described in the open literature including ***methods of estimating and/or tracking the entire channel transfer function from a known transmitted signal where the separate estimation of the power, timing offset, phase, frequency offset, and multipath structure is not necessary***. The outputs, here designated 50, correspond to the parameter values for the first signal in the channel.

Id., 6:9-23. This description in the '505 patent refers to elements numbered in Figure 2, below, where the parameter tracking unit is shown:

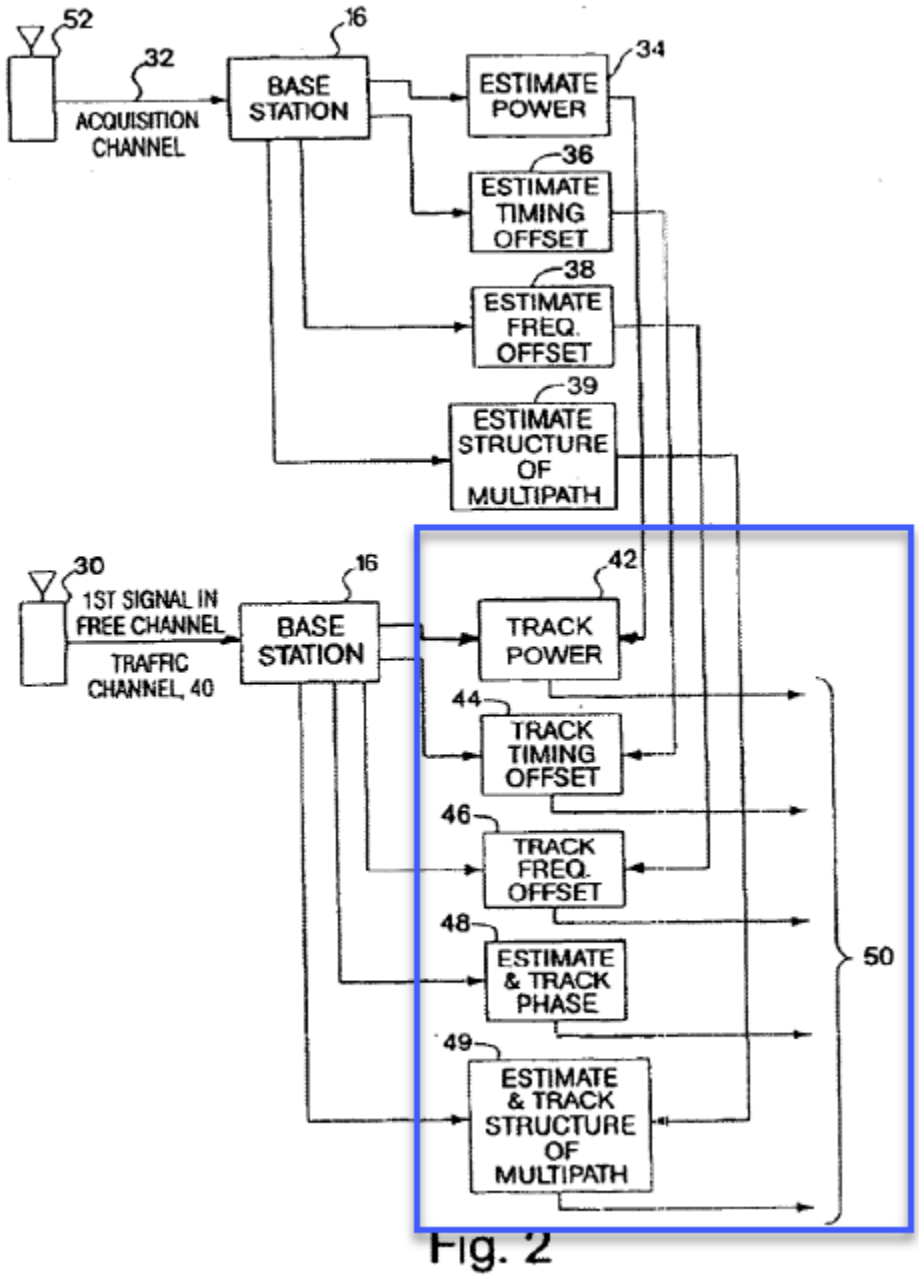

Fig. 2

61. The ’505 patent also describes the structure of the parameter tracking unit in the following:

> ***Referring now to FIG. 4,*** in order to accommodate a ***parallel tracking of the interfering signals***, assuming that the ***training sequences are known for these signals and one has initial estimates of all of the signal parameters such as of course, power, frequency offset, timing offset, and multipath structure, then these parameters can be updated by recalculating parameters associated with the first signal by using the information available from the second and third signals***. The reason for the updating is that the parameters change in time. What will be first described is the serial updating scheme in which ***the parameter tracking unit of FIG. 3, which include all of the elements and dotted box 90, are duplicated as 90, 90' and 90''***.

Id., 7:45-8:40. This description in the '505 patent refers to elements numbered in Figures 3 and 4, below, where the parameter tracking unit is shown:

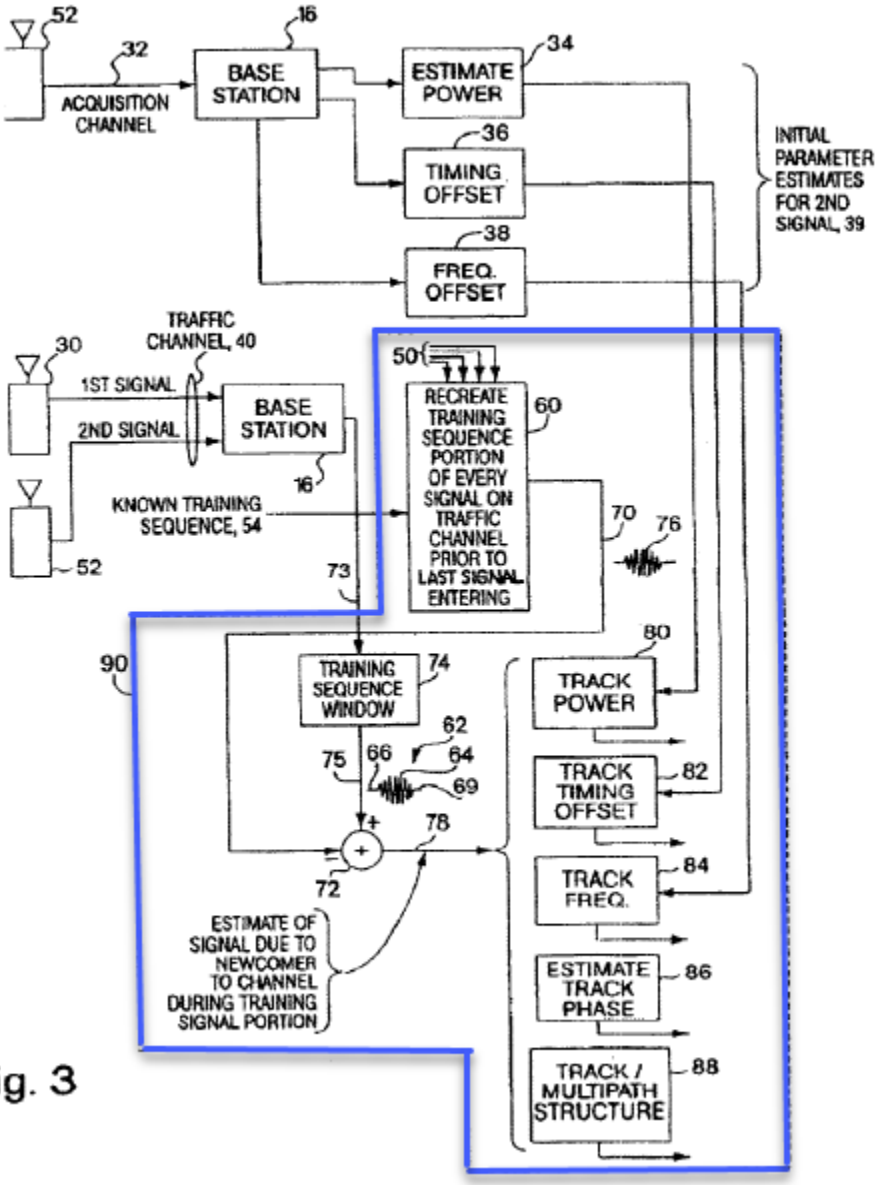
52
32
ACQUISITION CHANNEL
16
BASE STATION
ESTIMATE POWER
34
36
TIMING OFFSET
38
FREQ. OFFSET
INITIAL PARAMETER ESTIMATES FOR 2ND SIGNAL, 39
30
TRAFFIC CHANNEL, 40
1ST SIGNAL
2ND SIGNAL
BASE STATION
16
KNOWN TRAINING SEQUENCE, 54
52
50
RECREATE TRAINING SEQUENCE PORTION OF EVERY SIGNAL ON TRAFFIC CHANNEL PRIOR TO LAST SIGNAL ENTERING
60
70
76
73
90
TRAINING SEQUENCE WINDOW
74
62
75
66
64
69
78
72
ESTIMATE OF SIGNAL DUE TO NEWCOMER TO CHANNEL DURING TRAINING SIGNAL PORTION
80
TRACK POWER
TRACK TIMING OFFSET
82
TRACK FREQ.
84
ESTIMATE TRACK PHASE
86
TRACK / MULTIPATH STRUCTURE
88

Fig. 3

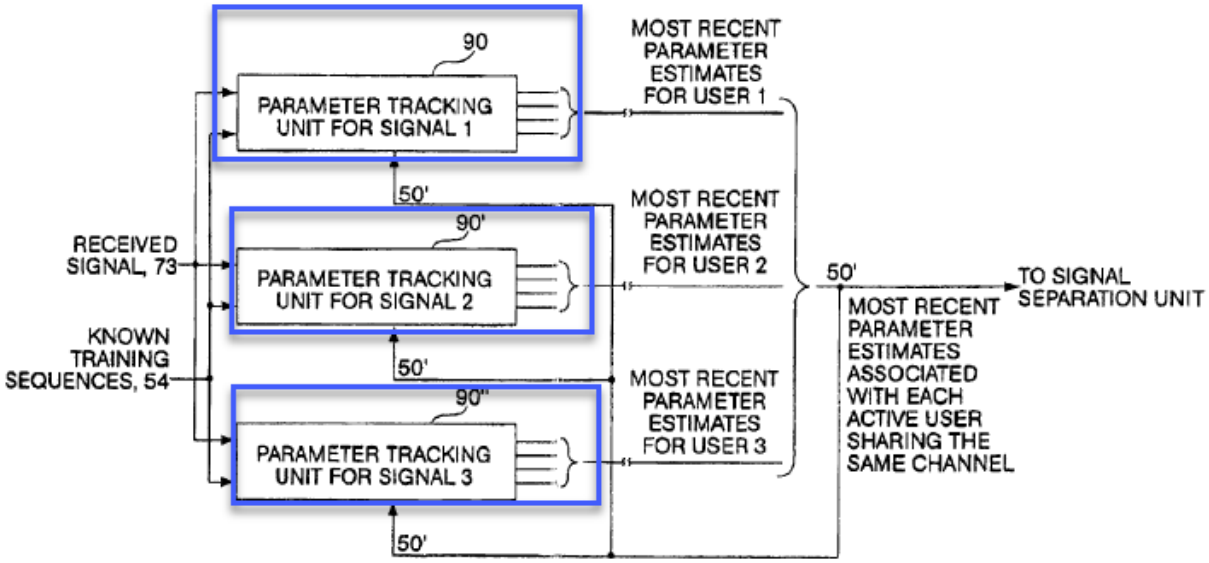

Fig. 4

62. In each of these disclosures, in my opinion it is clear that the parameter tracking unit performs the claimed function of "providing uninterrupted estimates of the channel transfer function parameters on a real-time basis." Thus, I understand that the parameter tracking unit is the corresponding structure for the claimed "means."

VI. Overview of Prior Art

63. Below, I discuss the references I rely on in my declaration.

1. Hottinen (Ex. 1004)

64. Hottinen was filed April 7, 1997, claims priority to an October 7, 1994 foreign application, and published April 18, 1996. I understand that it is prior art. Hottinen discloses a multi-user detection system that dynamically performs

parameter estimation to separate the signals. As shown in Fig. 1A, Hottinen discloses multiple users transmit interfering signals on the same transmission channel that are received by a receiver.

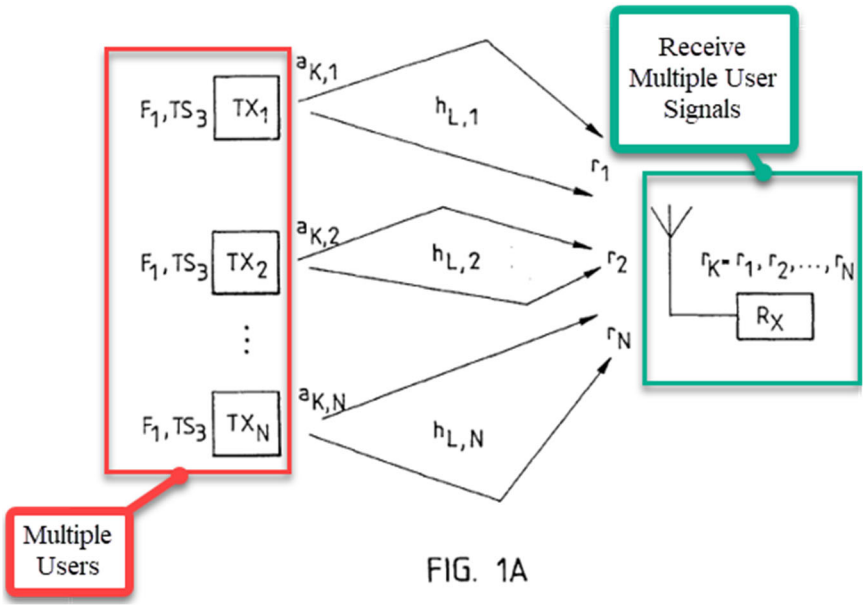

FIG. 1A

65. Figure 2 of Hottinen discloses the receiver that receives the multiple interfering user signals includes a parameter estimator that estimates the user signals from interference and then separates the user's signals from the interfering signals using a detector.

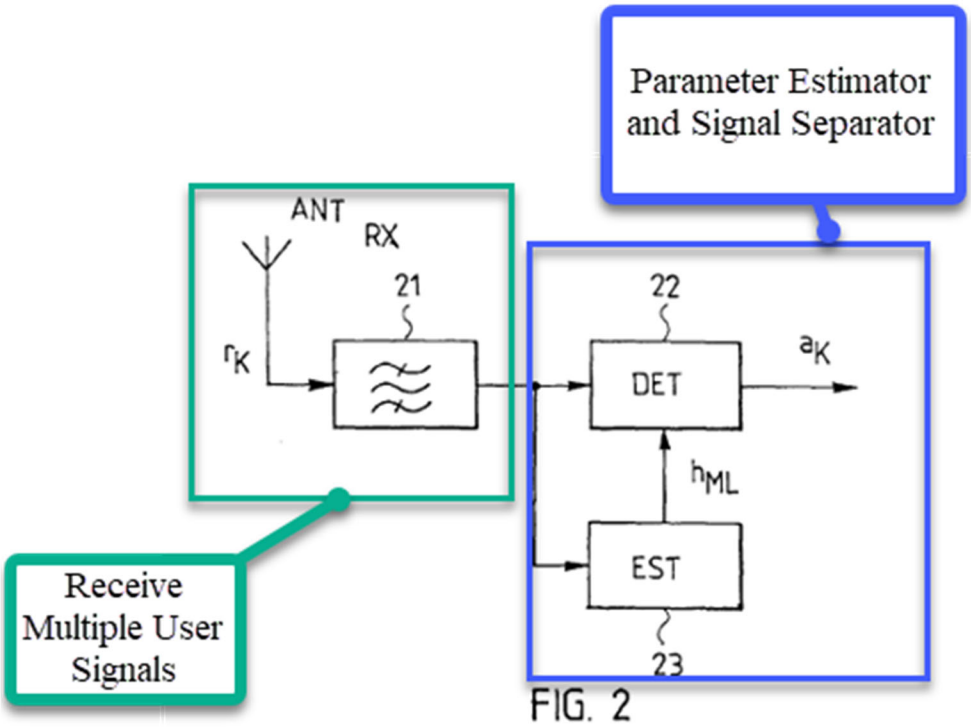

66. Hottinen discloses that the MUD parameter estimation and signal separation is performed uninterruptedly as it is constantly "determining a transmission channel estimate of the at least one interfering co-channel signal" so every "received signal is continuously cleaned." Ex. 1004, 3:8-23, 9:46-57. Additionally, Hottinen notes that "the parameters of the channel or the estimates thereof are known" as the "multipath channels provide a memory which can be advantageously utilized in the detection process." Ex. 1004, 5:23-33.

2. Zimmerman (Ex. 1005)

67. Zimmerman was filed June 25, 1993, claiming priority to June 26, 1992, and published January 6, 1994. I understand that it is prior art. Zimmerman

discloses a dynamic multi-user detector that estimates signal parameters and separates them based on the signal properties. As shown in Fig. 1, Zimmerman discloses multiple users transmitting over the same transmission line. The interfering signals of the multiple users are received by the interference cancelling receiver which performs parameter estimates and then separates the user's signals from the interfering signals using a demodulator.

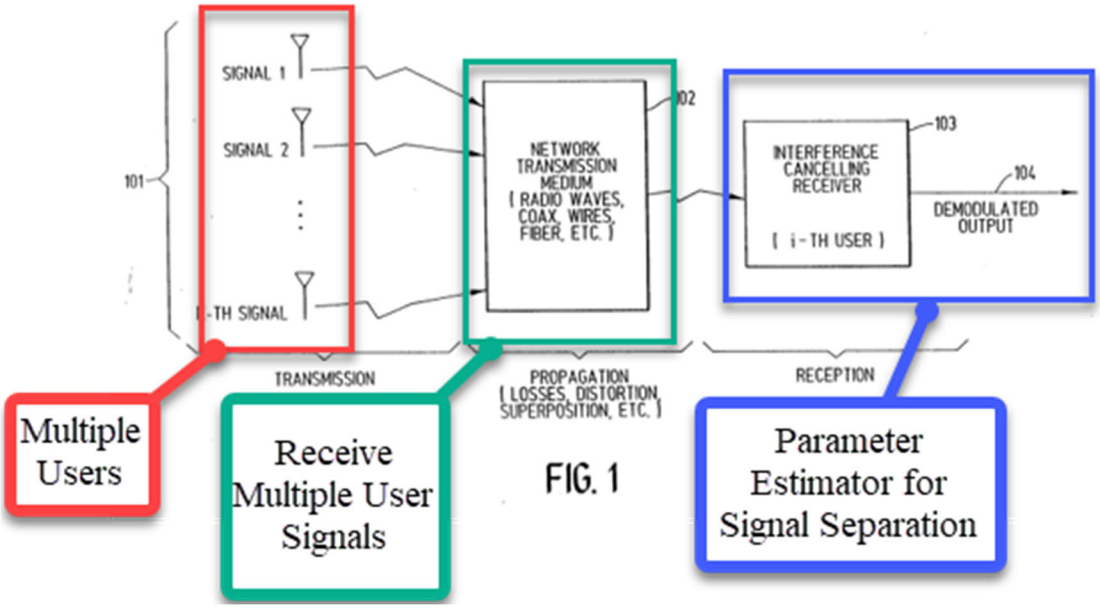

FIG. 1

68. Zimmerman discloses performing the parameter estimation and separation of the signals uninterruptedly as the estimates are performed in a "self-bootstrapping, continuous" mode of operation. Ex. 1005, 25. Additionally, Zimmerman notes that "estimation techniques could be used in a tracking mode, where the estimate is updated over time using previous estimates" to perform adaptive noise-cancelling and obtain better quality results. Ex. 1005, 21, 24.

3. Lilleberg (Ex. 1006)

69. Lilleberg was filed August 18, 1997, with a priority date of November 1, 1995, and published May 18, 1999 when it issued. I understand that it is prior art. Lilleberg discloses a dynamic multi-user detector that performs parameter estimation to identify signals for each user and eliminating interference. Ex. 1006, Abstract. Lilleberg discloses the parameter estimator includes a parameter tracker that uses known parameter estimates and outputs the tracked signal "amplitude and the delay" as well as "phases," "power," frequency and multipath structure. Ex. 1006, 2:1-6, 3:19-47. As shown in Fig. 2, Lilleberg discloses that the channel parameter estimates from EST 23 are fed back to EST 20 to be tracked and used for the further channel parameter estimates.

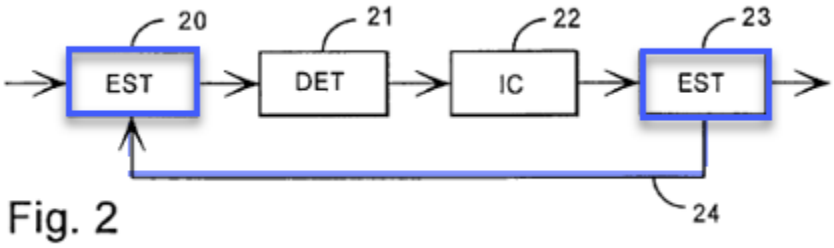

Fig. 2

VII. Summary of Opinions on Unpatentability

70. In the analysis that follows, I identify the following combinations of prior art that, in my opinion, anticipate and/or render obvious the '505 patent claims:

Ground	Basis	Reference(s)	Claims

1	§103	Hottinen, Lilleberg	1, 3-5, 7-9
2	§103	Zimmerman in view of Lilleberg	1, 3-5, 7-9

A. Ground 1: Claims 1, 3-5, and 7-9 are Rendered Obvious by Hottinen in view of Lilleberg

71. I provide a summary of this ground as follows. Hottinen discloses a multi-user detection system that separates a signal by using parameter estimation and a signal separator. Ex. 1004, 3:8-23, 9:46-57. Lilleberg discloses that multi-user detectors can use parameter tracking, which is useful in a MUD system like Hottinen because it provides feedback from prior parameter estimates and results in faster and more accurate estimations. Ex. 1006, 2:31-33. It would have been obvious to combine Lilleberg's MUD parameter tracking with Hottinen's MUD system with parameter estimation.

1. Motivation to Combine

72. In my opinion, a POSITA would have been motivated to incorporate Lilleberg's teachings of a parameter tracker that implements channel estimation using real-time feedback and output parameters into Hottinen's receiver for processing multi-user signals. Hottinen discloses parameter estimation is performed uninterruptedly as it is constantly "determining a transmission channel estimate of the at least one interfering co-channel signal" so every "received signal is continuously cleaned." Ex. 1004, 3:8-23, 9:46-57. But Lilleberg provides the

implementation detail regarding the structure of the parameter tracker used by the multi-user detector to achieve real-time estimation and tracking, as it discloses a parameter tracking unit for channel estimation where the parameter tracking unit outputs "amplitude and the delay" as well as "phases," "power," frequency and multipath structure. Ex. 1006, 2:1-6, 3:19-47. Lilleberg's parameter tracker provides realtime feedback to the parameter estimator so the signals can be cleaned quicker and more accurately based on prior estimates. Ex. 1006, 2:31-33.

73. MUD is a well-known, decades-old type of signal detection and processing that uses signal parameter estimates to identify the user signals and remove interfering signals. As taught in Lilleberg, MUD uses the signal parameters like signal amplitude, delay, phase, power, frequency, and multipath structure to identify the signal from interfering signals. Ex. 1006, 2:1-6, 3:19-47. These signal parameters were well-known to allow accurate signal estimations and separations. *Id*. In my opinion, a POSITA would have been motivated to incorporate Lilleberg's teachings of a parameter tracker that implements channel estimation using real-time feedback and output parameters into Hottinen's receiver for processing multi-user signals for at least the following reasons.

74. ***First***, Hottinen discloses parameter estimation is performed uninterruptedly as it is constantly "determining a transmission channel estimate of

the at least one interfering co-channel signal" so every "received signal is continuously cleaned." Ex. 1004, 3:8-23, 9:46-57. Additionally, Hottinen discloses that it is configured to enable tracking parameter estimates, as "the parameters of the channel or the estimates thereof are known" and the "multipath channels provide a memory which can be advantageously utilized in the detection process." Ex. 1004, 5:23-33. Hottinen, however, does not expressly teach the real-time tracking structure of the parameter tracking unit includes the output of the parameter tracking unit is used as feedback for successive parameter estimates where the outputs are of the received power, the phase of the oscillator for each of the transmitted signals, the timing offset relative to the base station clock and transmission distance, the carrier frequency offset and the multipath structure. Lilleberg, on the other hand, teaches that a real-time parameter tracking unit that includes feedback for successive parameter estimates for channel estimation where the outputs include "amplitude and the delay" as well as "phases," "power," frequency and multipath structure, and that this was well-known. Ex. 1006, 2:1-6, 3:19-47. In my opinion, a POSITA would therefore be motivated to give effect to Hottinen's teaching of parameter tracking by incorporating Lilleberg's teachings of the output parameters and feedback of the parameter tracking unit. In addition, using a parameter tracking unit that includes feedback outputs of the received power, the phase of the oscillator for each of the

transmitted signals, the timing offset relative to the base station clock and transmission distance, the carrier frequency offset and the multipath structure would have been a mere design choice. A POSITA would have known that using more parameters would result in better estimates, so a POSITA would be motivated to use received power, the phase of the oscillator for each of the transmitted signals, the timing offset relative to the base station clock and transmission distance, the carrier frequency offset and the multipath structure as parameters.

75. ***Second***, in my opinion a POSITA would have been motivated to use a parameter tracking unit that includes feedback and tracking the parameters of the received power, the phase of the oscillator for each of the transmitted signals, the timing offset relative to the base station clock and transmission distance, the carrier frequency offset and the multipath structure because that would be an efficient method for processing parameter estimates from Hottinen's parameter estimator. In my opinion, a POSITA would have been well aware of the benefits of using a parameter tracking unit with a feedback output and using received power, the phase of the oscillator for each of the transmitted signals, the timing offset relative to the base station clock and transmission distance, the carrier frequency offset and the multipath structure. A POSITA would have also known that such a parameter tracking unit was more efficient and significantly faster than performing parameter

estimates without any feedback or tracking. In my opinion, the benefits of feedback processing and tracking had long been known by the filing date of the '505 patent. Lilleberg expressly discloses that these benefits included quicker processing and cleaning of signals, as well as more accurate estimates based on prior estimates. Ex. 1006, 2:31-33.

76. ***Third***, in my opinion a POSITA would have been motivated by the fact that efficiency and speed were very important and desirable for processing wireless communications. As wireless communication speeds and bandwidth have increased, it is necessary for the processing of such signals to become more efficient in order to process the increased amount of data in real-time. Because Hottinen and Lilleberg describe detecting and decoding wireless signals containing data, a POSITA would have found it highly desirable to perform such processing as efficiently and quickly as possible in order to maximize bandwidth. Lilleberg expressly discloses that these benefits are achieved by using its parameter tracking unit. Ex. 1006, 2:31-33.

77. In my opinion, a POSITA would have had a reasonable expectation of success. Both Hottinen and Lilleberg describe the same process of performing MUD and then separating the signals. Indeed, both Hottinen and Lilleberg describe similar, well-known methods of for parameter estimating. For example, both Hottinen and Lilleberg disclose parameter estimators and the benefit of tracking

prior parameter estimates. Ex. 1004, 5:23-33; Ex. 1006, 2:31-33. In my opinion, these were well-known parameter estimators and decoders and Lilleberg discloses that a parameter tracker including feedback outputs of the received power, the phase of the oscillator for each of the transmitted signals, the timing offset relative to the base station clock and transmission distance, the carrier frequency offset and the multipath structure was already prior art. Thus, it would have been well-within the skill of a POSITA to implement Hottinen's parameter estimator using Lilleberg's teachings regarding parameter selection and paraemeter tracking, since such implementation was well-known and conventional.

78. Finally, in my opinion Hottinen, Lilleberg, and the '505 patent are analogous art because all three are directed to the same field of MUD and parameter estimation, that is, processing a data stream from multiple users using signal parameters for detection.

2. 1pre: In a multi-user detection system in which interfering signals are purposely allowed to exist,

79. In my opinion, Hottinen discloses this limitation, to the extent the preamble is limiting.

80. Hottinen discloses that is directed to "a signal detection method in a receiver of a TDMA mobile system" where the system has "several concurrent co-channel users" with "N transmitters TX1, TX2, . . ., TXN, which all transmit at the

same frequency F1 and in the same time slot TS3" (i.e., "**multi-user detector system**"). Ex. 1004, 3:8-23, 4:41-65.

81. Further, Hottinen expressly teaches that "***a primary signal and at least one interfering co-channel signal are received***, preferably asynchronously, ***on the same TDMA channel***." *Id.* Because each of the transmitters transmit at the same frequency and in the same time slot, the transmissions will include ***interfering signals*** (as Hottinen expressly confirms). And as Hottinen makes clear, the signals are ***purposely*** transmitted as interfering signals (*i.e.*, at the same frequency and time, and on the same TDMA channel).

82. Fig. 1A, annotated below, further demonstrates that Hottinen's system is a multi-user detection system where multiple users purposely transmit interfering signals (to be received by a receiver) on the same transmission channel.

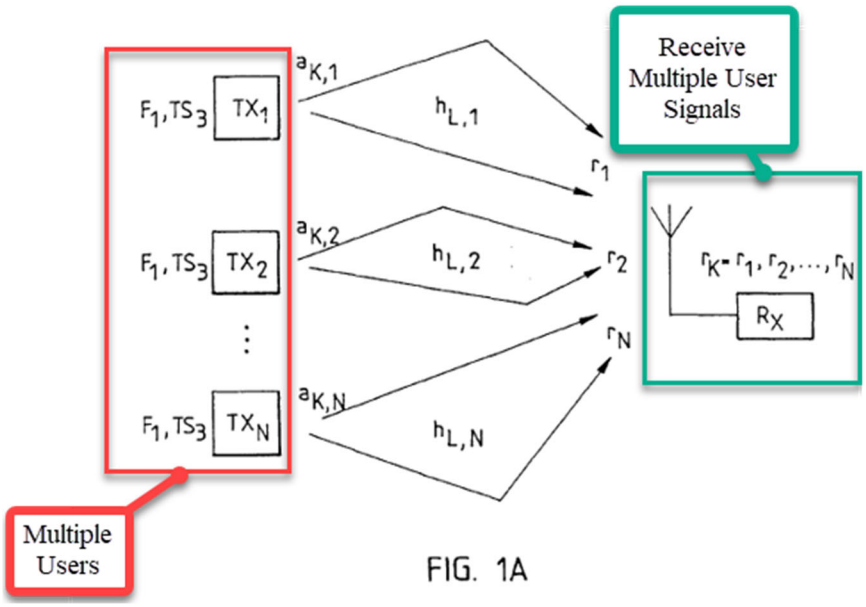

FIG. 1A

83. Accordingly, to the extent it is limiting, in my opinion Hottinen discloses this claim limitation.

(a) 1a: a parameter estimation unit for use in conjunction with a signal separation unit, in which each received signal has associated channel transfer functions, comprising:

84. In my opinion, Hottinen discloses this limitation.

85. "***a parameter estimation unit for use in conjunction with a signal separation unit***": Hottinen discloses "channel estimator 23 provides the channel estimates of the co-channel signals" (i.e., "**parameter estimation unit**"). Ex. 1004, 5:49-54. Hottinen discloses that the channel estimator uses signal parameters from training sequences, which include power, phase, timing offset, carrier frequency offset, and structure. *Id*., 5:33-54. The channel estimator (*i.e.*, "**parameter estimation unit**") is used in conjunction with "a detector DET 22" (*i.e.*, "**signal separation unit**"). The detector DET 22 receives an output from the channel estimator "for detecting the primary signal" and separating the primary signal from the other signals. Ex. 1004, 5:49-54. I have indicated the channel estimator (*i.e.*, "**parameter estimation unit**"), and detector DET 22 (*i.e.*, "**signal separation unit**") in annotated Fig. 2 below:

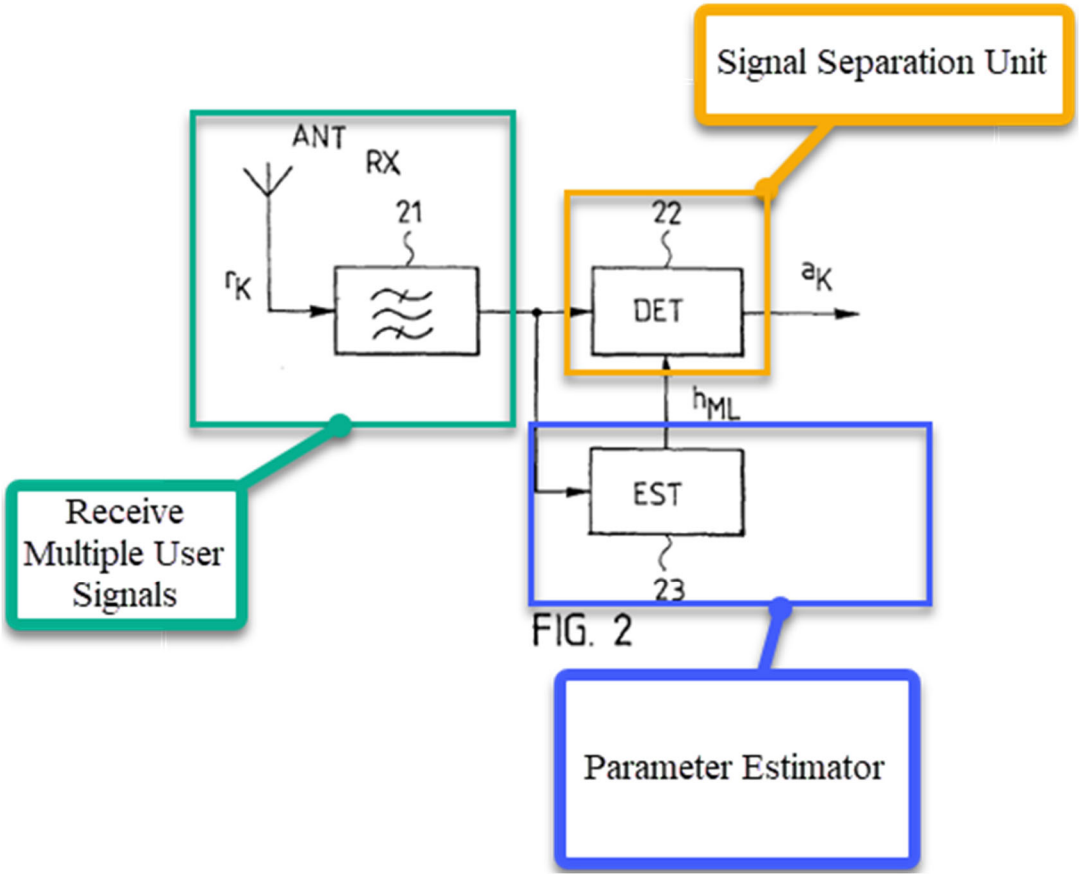

86. The '505 patent states that channel estimation is the same as parameter estimation as "knowing the channel transfer function is equivalent to knowing these parameters." Ex. 1001, 5:23-28. A POSITA would have understood that Hottinen's channel estimator is the claimed parameter unit. Additionally, in its infringement contentions in the district court litigation, Patent Owner has mapped the parameter estimation unit to "channel estimation" in "4G" (Ex. 1009, Ex. 3 at 1), which is the same as the channel estimator disclosed in Hottinen. Ex. 1004, 5:49-54.

87. ***"each received signal has associated channel transfer functions":*** Hottinen discloses "the parameters of the channel or the estimates thereof are known" for **each received signal** as well as the "different training sequences, which are transmitted through the channels" (*i.e.*, "**associated channel transfer functions**"). Ex. 1004, 5:23-35. As a POSITA would understand, these known signal parameters from the training sequences and known estimates include power, phase, timing offset, carrier frequency offset, and structure. *Id*., 5:33-54.

88. Accordingly, in my opinion Hottinen discloses this limitation.

(b) 1b: a signal processor for determining said channel transfer functions for each received signal; and,

89. In my opinion, Hottinen discloses this limitation.

90. Hottinen discloses "the use of **a signal processor**" for performing the channel estimates based on signal parameters (*i..e.*, "**for determining said channel transfer functions for each received signal**"). Ex. 1004, 6:43-67, 9:46-57. For example, Hottinen discloses the **signal processor** determines "the parameters of the channel or the estimates" for each received signal by using the "different training sequences, which are transmitted through the channels." Ex. 1004, 5:23-35. Hottinen discloses exemplary equations that use signal parameters as inputs to perform the channel estimates and are performed by the **signal processor**. Ex. 1004, 6:10-58. Hottinen discloses that in "practical solutions" a "signal processor" is used

to implement the "channel estimator" determining different transfer functions. Ex. 1004, 9:46-57.

91. Accordingly, in my opinion Hottinen discloses this limitation.

(c) 1c: means coupled to said channel transfer function determining signal processor for providing uninterrupted estimates of the channel transfer function parameters on a real-time basis by first deriving the estimated channel transfer function for each of said interfering signals.

92. In my opinion, Hottinen in view of Lilleberg renders obvious this limitation.

93. I understand that this claim limitation is a means plus function limitation, and in my opinion the corresponding function is: providing uninterrupted estimates of the channel transfer function parameters on a real-time basis by first deriving the estimated channel transfer function for each of said interfering signals and structure: parameter tracking unit and equivalents thereof. *See, e.g.*, Ex. 1001, 5:20-40, 6:9-23, 7:45-8:40, Fig. 1, Fig. 3, Fig. 4 (parts 90, 90', 90').

94. ***"providing uninterrupted estimates of the channel transfer function parameters on a real-time basis by first deriving the estimated channel transfer function for each of said interfering signals":*** Hottinen discloses the channel estimation function (*i.e.*, "**estimates of the channel transfer function parameters**") are performed uninterruptedly as it is constantly "determining a

transmission channel estimate of the at least one interfering co-channel signal" so every "received signal is continuously cleaned" (*i.e.*, "**providing uninterrupted estimates … on a real-time basis**"). Ex. 1004, 3:8-23, 9:46-57. Hottinen discloses that "joint estimation of channel parameters can be carried out for instance by means of different training sequences, which are transmitted through the channels" as the first step of "determining a transmission channel estimate of the at least one interfering co-channel signal" (*i.e.*, "**by first deriving the estimated channel transfer function for each of said interfering signals**"). Ex. 1004,3:8-23, 5:33-35.

95. ***"parameter tracking unit and equivalents thereof":*** Hottinen discloses "the parameters of the channel or the estimates thereof are known" as the "multipath channels provide a memory which can be advantageously utilized in the detection process" (*i.e.*, "**parameter tracking unit**"). Ex. 1004, 5:23-33. In my opinion, because Hottinen discloses a memory for storing the channel parameters and uses these stored parameters in providing estimates, a POSITA would have understood that it is tracking the parameters. Hottinen also discloses that the memory for storing the channel parameters is coupled to the signal processor, as the signal processor accesses the memory to get "the parameters of the channel or the estimates" for each received signal and using the "different training sequences,

which are transmitted through the channels" (*i.e.*, "**coupled to said channel transfer function determining signal processor**"). Ex. 1004, 5:23-35.

96. While Hottinen does not expressly disclose the implementation detail regarding the structure of the parameter tracker used by the multi-user detector to achieve real-time estimation and tracking, Lilleberg discloses a parameter tracking unit for channel estimation where the parameter tracking unit outputs "amplitude and the delay" as well as "phases," "power," frequency and multipath structure. Ex. 1006, 2:1-6, 3:19-47. As shown in Fig. 2, Lilleberg discloses that the channel parameter estimates from EST 23 are fed back to EST 20 to be tracked and used for the further channel parameter estimates.

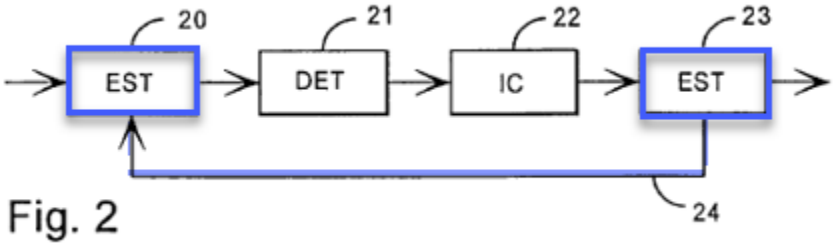

Fig. 2

97. As discussed above in section VII.A.1, in my opinion it would have been obvious for a POSITA to combine Hottinen with Lilleberg, and such a combination would render obvious this claim limitation.

4. Claim 3: The parameter estimation unit of claim 1, wherein the multi-user detection system includes providing an acquisition channel, and wherein the first derived estimated

channel transfer function is derived from acquisition channel parameters.

98. In my opinion, Hottinen discloses this claim.

99. ***"the multi-user detection system includes providing an acquisition channel":*** Hottinen discloses a channel for transmitting the "training sequence" that is the signal for parameter estimation (*i.e.*, "**acquisition channel**") and the "training sequence is located in the middle of the burst" and so has a "midamble" channel. Ex. 1004, 5:60-67. Fig. 3 shows the "training sequence" channel that transmits the signal for parameter estimation (*i.e.*, "**acquisition channel**").

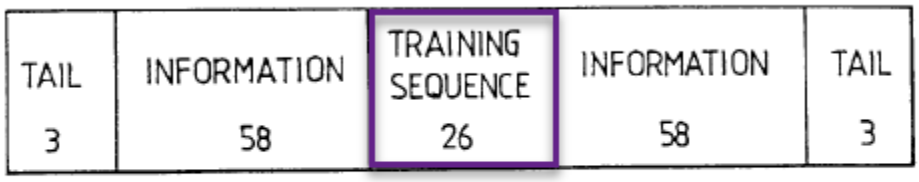

FIG. 3

100. I understand that in its infringement contentions in the district court litigation, Patent Owner mapped the acquisition channel to the "Synchronization Signal Block" in "LTE" (Ex. 1009, Ex. 3 at 33), which a POSITA would understand is the same as the training sequence midamble disclosed in Hottinen. Ex. 1004, 5:60-67.

101. ***"the first derived estimated channel transfer function is derived from acquisition channel parameters":*** Hottinen discloses deriving "the parameters of

the channel or the estimates" (*i.e.*, "**derived estimated channel transfer function**") for each received signal by using the "different training sequences, which are transmitted through the channels" (*i.e.*, "**acquisition channel parameters**"). Ex. 1004, 5:23-35.

102. Accordingly, in my opinion Hottinen discloses this claim.

5. Claim 4: The parameter estimation unit of claim 1, wherein said multi-user detection system includes a tracking unit for acquired signals, and wherein in the presence of a new signal in the acquisition channel of said parameter estimation unit estimates the channel transfer function prior to signal switching from an acquisition channel to the traffic channel, with said parameter estimation unit parameters being passed to said tracking unit thereafter.

103. In my opinion, Hottinen discloses this claim.

104. ***"multi-user detection system includes a tracking unit for acquired signals":*** Hottinen discloses "the parameters of the channel or the estimates thereof are known" as the "multipath channels provide a memory which can be advantageously utilized in the detection process" (*i.e.*, "**tracking unit for acquired signals**"). Ex. 1004, 5:23-33. In my opinion, a POSITA would understand that as Hottinen discloses a memory for storing the channel parameters and signals, Hottinen is tracking the signals and parameters.

105. ***"in the presence of a new signal in the acquisition channel of said parameter estimation unit estimates the channel transfer function prior to signal***

switching from an acquisition channel to the traffic channel": Hottinen discloses "channel estimator 23 provides the channel estimates of the co-channel signals" (*i.e.*, "**parameter estimation unit**"). Ex. 1004, 5:49-54. Hottinen discloses that the channel estimator uses signal parameters from training sequences (*i.e.*, "**new signal in the acquisition channel**"), which include power, phase, timing offset, carrier frequency offset, and structure. *Id.*, 5:33-54. The channel estimator (*i.e.*, "**parameter estimation unit**") "determin[es] a transmission channel estimate of the at least one interfering co-channel signal" (*i.e.*, "**estimates the channel transfer function**"). Ex. 1004, 3:8-23. Hottinen discloses that the "estimation and regeneration of co-channel signals may also take place as a parallel process" and uses the training sequence before the signal switches to the traffic channel *(i.e.,* "**estimates the channel transfer function prior to signal switching from an acquisition channel to the traffic channel**"). Ex. 1004, 4:7-10.

106. ***"said parameter estimation unit parameters being passed to said tracking unit thereafter":*** Hottinen discloses "the parameters of the channel or the estimates thereof are known" as the "multipath channels provide a memory which can be advantageously utilized in the detection process" (*i.e.*, "**tracking unit for acquired signals**"). Ex. 1004, 5:23-33. In my opinion, because Hottinen discloses a memory for storing the channel parameters and signals, a POSITA would

understand that it is configured to track the signals and parameters by receiving the parameters after estimating as it is being used to store or track the signals as part of the detection process.

107. In my opinion, this limitation would have also been obvious in view of Lilleberg. Lilleberg discloses multi-user detectors that use parameter estimators and trackers "utiliz[ing] feedback 24 from the second estimation means 23 to the first estimation means 20." Ex. 1006, 3:39-47. Lilleberg discloses that "[e]stimation results obtained from the second estimation means can thus be utilized when preliminary estimates are computed … by supplying the channel parameters obtained from the second estimation means concerning sample b_n to the first estimation means as default values for computing preliminary channel parameters for the next sample b_{n+1}." Ex. 1006, 3:39-47. The parameter estimator and tracker in Lilleberg are shown below:

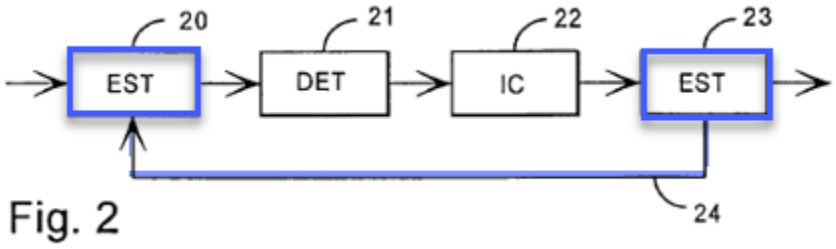

Fig. 2

108. As discussed above in Section VII.A.1, in my opinion a POSITA would have found it obvious to combine Hottinen and Lilleberg and in my opinion Hottinen in view of Lilleberg renders obvious this claim.

6. Claim 5: The parameter estimation unit of claim 1, and further including a traffic channel, and wherein for said traffic channel phase is tracked without utilization of the estimates from the acquisition channel.

109. In my opinion, Hottinen discloses this claim.

110. ***"a traffic channel":*** Hottinen discloses a "multipath channel" that has "a certain impulse response and which provides a unique wave form coding for the signal" (*i.e.*, "**traffic channel**"). Ex. 1004, 4:57-63. "The signal sequences ak,1 . . . ak,N transmitted in FIG. 1A travel through multipath channels hL,1 . . . hL,N, respectively, whereby wave form coded signals r1 . . . rN are received in the receiver Rx." *Id*. Fig. 1a shows the "multipath channel" that has "a certain impulse response and which provides a unique wave form coding for the signal" (*i.e.*, "**traffic channel**").

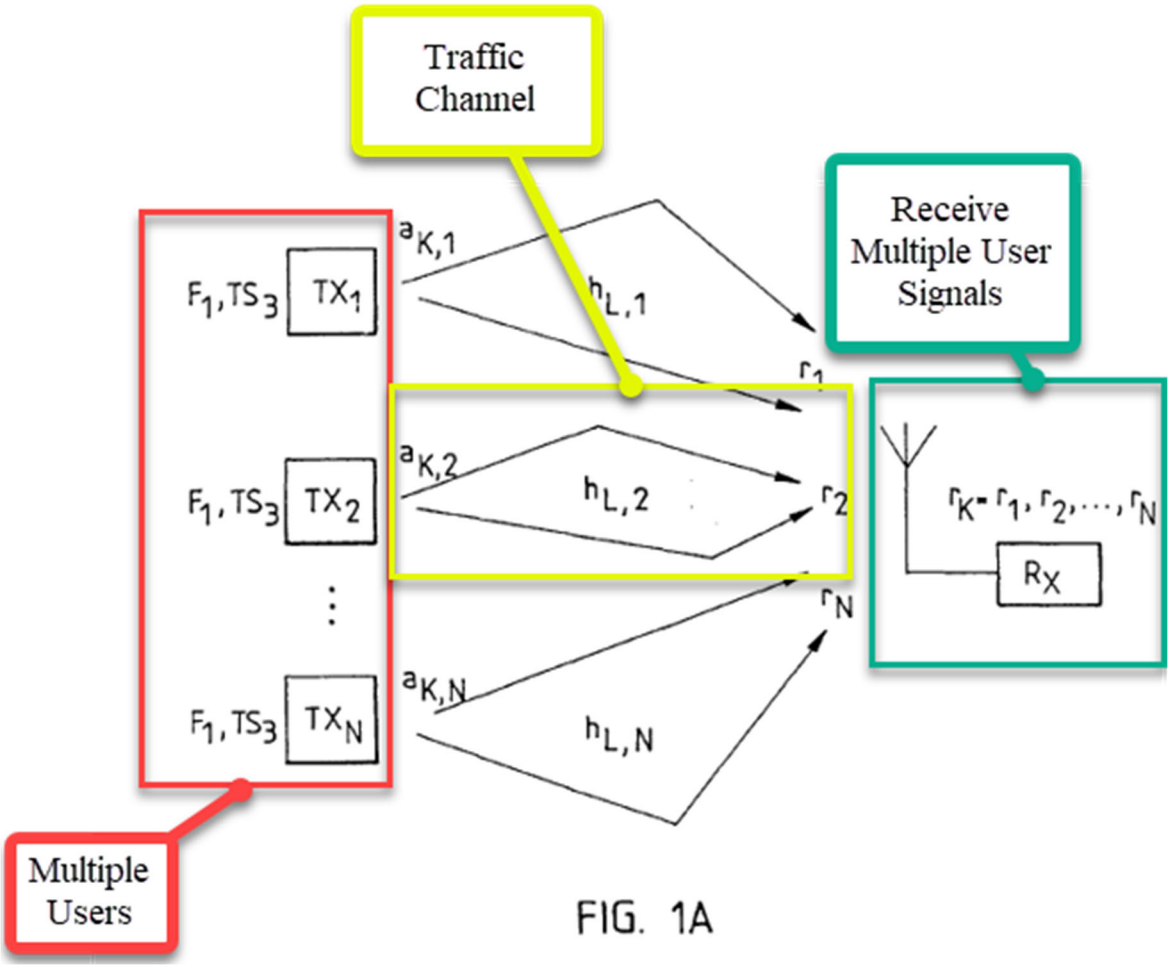

FIG. 1A

111. ***"for said traffic channel phase is tracked without utilization of the estimates from the acquisition channel":*** Hottinen discloses "the parameters of the channel or the estimates thereof are known" as the "multipath channels provide a memory which can be advantageously utilized in the detection process" and the training sequence channel is a separate channel as it is the "midamble" position (*i.e.*, "**tracked without utilization from the acquisition channel**"). Ex. 1004, 5:23-33, 5:60-67. In my opinion, a POSITA would understand that because Hottinen discloses a memory for storing the channel parameters and signals, it is tracking the

signals for each channel individually. For example, Hottinen discloses detectors, channel estimators, and memory for each primary signal and interfering signal received on each channel. Ex. 1004, 9:20-30.

112. I also understand that in its infringement contentions in the district court litigation, Patent Owner mapped the acquisition channel to the "Synchronization Signal Block" in "LTE" and the traffic channel to a "connected mode" (Ex. 1009, Ex. 3 at 44-45), which is the same as the training sequence midamble and the connected channel disclosed in Hottinen. Hottinen, 5:60-67.

113. Accordingly, in my opinion Hottinen discloses this claim.

7. Claim 7: The parameter estimation unit of claim 1, wherein after initial estimate generation, said multi-user detection system simultaneously tracks all signals in a traffic channel.

114. In my opinion, Hottinen discloses this claim.

115. Hottinen discloses "the parameters of the channel or the estimates thereof are known" as the "multipath channels provide a memory which can be advantageously utilized in the detection process" (*i.e.*, "**after initial estimate generation**"). Ex. 1004, 5:23-33. Hottinen discloses after the initial estimate is generated, a memory for storing the channel parameters and signals tracks all the signals for each channel (*i.e.*, "**multi-user detection system simultaneously tracks all signals in a traffic channel**"). Ex. 1004, 9:20-30. Hottinen discloses tracking all signals simultaneously as "the detection of multiple co-channel signals with

simultaneous ISI compensation" and detection and tracking of all signals is performed as "parallel processes." Ex. 1004, 7:51-55, 9:45-50. Accordingly, in my opinion Hottinen discloses this claim.

116. In my opinion, this claim would have also been obvious in view of Lilleberg. Lilleberg discloses multi-user detectors that use parameter estimators and tracking "two simultaneously received signals that comprise time slots 60-63 and 64-67 respectively." Ex. 1006, 5:34-35. The parameter estimator and tracker in Lilleberg are shown below in annotated Fig. 2:

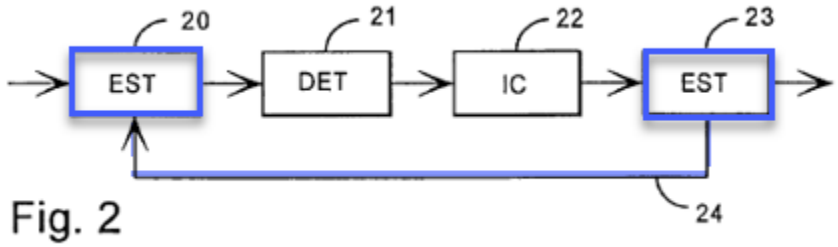

Fig. 2

117. As discussed above in Section VII.A.1, in my opinion a POSITA would have found it obvious to combine Hottinen and Lilleberg. Accordingly, in my opinion Hottinen in view of Lilleberg render obvious this claim.

8. Claim 8: The parameter estimation unit of claim 7, wherein said simultaneous tracking includes blocks for parallel recreation of the training signal portions of the traffic channel signal, each parallel processing block isolating a different signal in said traffic channel.

118. In my opinion, Hottinen discloses this claim.

119. Hottinen discloses "the parameters of the channel or the estimates thereof are known" as the "multipath channels provide a memory which can be advantageously utilized in the detection process" (*i.e.*, "**simultaneous tracking**"). Ex. 1004, 5:23-33. Hottinen discloses tracking all signals simultaneously as "the detection of multiple co-channel signals with simultaneous ISI compensation" and detection and tracking of all signals is performed as "parallel processes." Ex. 1004, 7:51-55, 9:45-50. In the parallel processes, there a detector ("DET") and estimator ("EST") blocks for isolating different signals in the channel (*i.e.*, "**blocks for parallel recreation of the training signal portions of the traffic channel signal, each parallel processing block isolating a different signal in said traffic channel**"). Accordingly, in my opinion Hottinen discloses this claim.

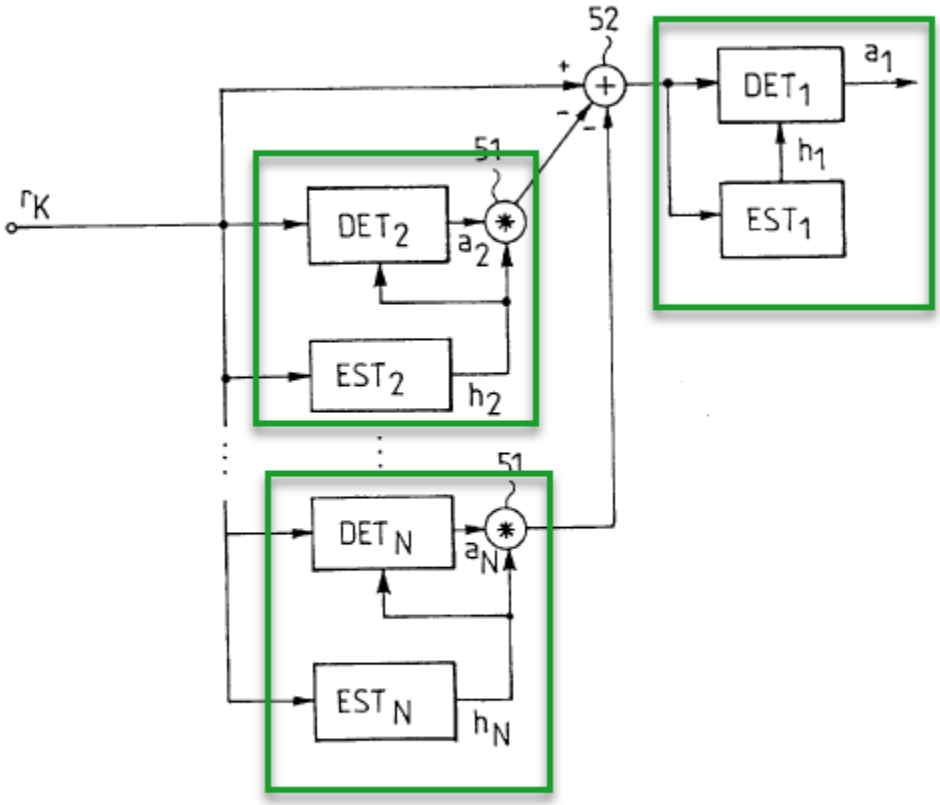

FIG. 5

120. Additionally, Lilleberg discloses "[t]he method of the invention can also be applied in a multistage receiver in which all the users received are processed in parallel" (*i.e.*, "**simultaneous tracking**"). Ex. 1006, 4:36-41. Lilleberg discloses "the receiver comprises three successive receiver stages 47-49, and in each stage are estimated the symbol estimates of the incoming signal. The later stages always produce a more accurate result than the earlier stages" (*i.e.*, "**blocks for parallel recreation of the training signal portions of the traffic channel signal, each**

parallel processing block isolating a different signal in said traffic channel").

Id., 4:47-52.

9. *Claim 9*

(a) 9pre: In a multi-user detection system in which interfering signals are purposely allowed to exist,

121. *See* 1pre. In my opinion, Hottinen discloses this limitation.

(b) 9a: a parameter estimation unit for use in conjunction with a signal separation unit for estimating channel transfer function parameters from channel transfer functions, comprising:

122. *See* 1a. In my opinion, Hottinen discloses this limitation.

(c) 9b: a signal processor for determining said channel transfer functions for each received signal; and

123. *See* 1b. In my opinion, Hottinen discloses this limitation.

(d) 9c: means coupled to said channel transfer function determining signal processor for providing uninterrupted estimates of the channel transfer function parameters on a real-time basis,

124. *See* 1c. In my opinion, Hottinen in view of Lilleberg renders obvious this limitation.

(e) 9d: said multi-user detection system including a tracking unit for acquired signals, and in the presence of a new signal in an acquisition channel of said parameter estimation unit estimating the channel transfer function prior to signal switching from the acquisition channel to a traffic channel, with said parameter estimation unit parameters being passed to

said tracking unit thereafter, all received signals having training portions,

125. *See* Claim 4. I understand that Claim element 9c is the same as Claim 4 except it includes an additional limitation "all received signals having training portions." In my opinion, Hottinen discloses this limitation.

126. ***"all received signals having training portions":*** Hottinen discloses "a primary signal and at least one interfering co-channel signal are received … on the same TDMA channel, the signals having different but known training sequences" (*i.e.*, "**all received signals having training portions**"). Ex. 1004, 3:8-23. Accordingly, in my opinion, Hottinen discloses this limitation.

(f) 9e: a second interfering signal being and assigned to said traffic channel, said parameter estimation unit recreating the training signal portion of every received signal prior to the last received signal and subtracting the recreated training signals from the training portion of the last received signal to provide an estimate solely due to the last received signal during the training signal portion, thus to allow an estimate of the last signal from which to calculate parameters of the last signal.

127. In my opinion, Hottinen discloses this limitation.

128. ***"a second interfering signal being and assigned to said traffic channel":*** Hottinen discloses the traffic channel including "a primary signal and at least one interfering co-channel signal." Ex. 1004, 3:8-15. Hottinen further discloses

that the traffic channel includes and is assigned "interfering signal R_2. . . . R_n." Ex. 1004, 9:20-24.

129. ***"said parameter estimation unit recreating the training signal portion of every received signal prior to the last received signal":*** Hottinen discloses "a transmission channel estimate of the at least one interfering co-channel signal" includes "regenerating an interfering signal from the received signal by utilizing the transmission channel estimate of the interfering co-channel signal" (*i.e.*, "**said parameter estimation unit recreating the training signal portion of every received signal**"). Ex. 1004, 3:15-21. A POSITA would understand that for multiple interfering co-channel signals, the transmission channel estimate for each interfering signal would be recreated. Hottinen discloses "the regenerated interfering signals … are subtracted from the received signal in a subtraction means" (*i.e.*, "**prior to the last received signal**"). Ex. 1005, 9:36-40. As the "regenerated signal" is subtracted from the "received signal," in my opinion a POSITA would understand that the regeneration is done prior to the last received signal.

130. ***"subtracting the recreated training signals from the training portion of the last received signal to provide an estimate solely due to the last received signal during the training signal portion":*** Hottinen discloses "the regenerated interfering signals … are subtracted from the received signal in a subtraction means"

(*i.e.*, "**subtracting the recreated training signals from the training portion of the last received signal** "). Ex. 1004, 9:36-40. Hottinen discloses "[a]fter this, the channel estimator EST of the primary signal calculates the multi-path channel estimate h of the primary signal from the output of the subtraction means 52, and the detector DET detects the transmitted sequence a of the primary signal" (*i.e.*, "**provide an estimate solely due to the last received signal during the training signal portion**") *Id*., 9:40-44.

131. ***"thus to allow an estimate of the last signal from which to calculate parameters of the last signal":*** Hottinen discloses "the channel estimator EST of the primary signal calculates the multi-path channel estimate h of the primary signal from the output of the subtraction means 52, and the detector DET detects the transmitted sequence a of the primary signal" (*i.e.*, "**allow an estimate of the last signal from which to calculate parameters of the last signal**") *Id*., 9:40-44.

132. Accordingly, in my opinion, Hottinen discloses this limitation.

B. Ground 2: Claims 1, 3, 4, 5, 7, 8, and 9 are Rendered Obvious by Zimmerman in view of Lilleberg

133. I provide a summary of this ground as follows.

134. Zimmerman discloses a multi-user detection system that separates a signal by using parameter estimation and a signal separator. Ex. 1005, 19, 25. Lilleberg discloses that multi-user detectors can use parameter tracking, which is

useful in a MUD system like Zimmerman because it provides feedback from prior parameter estimates and results in faster and more accurate estimations. Ex. 1006, 2:31-33. In my opinion, it would have been obvious for a POSITA to combine Lilleberg's MUD parameter tracking with Zimmerman's MUD system with parameter estimation.

1. Motivation to Combine

135. In my opinion, a POSITA would have been motivated to incorporate Lilleberg's teachings of a parameter tracker that implements channel estimation using real-time feedback and output parameters into Zimmerman's receiver for processing multi-user signals. Zimmerman discloses parameter estimation is performed uninterruptedly as the estimates are performed in a "self-bootstrapping, continuous" mode of operation. Ex. 1005, 25. But Lilleberg provides the implementation detail regarding the structure of the parameter tracker used by the multi-user detector to achieve real-time estimation and tracking, as it discloses a parameter tracking unit for channel estimation where the parameter tracking unit outputs "amplitude and the delay" as well as "phases," "power," frequency and multipath structure. Ex. 1006, 2:1-6, 3:19-47. Lilleberg's parameter tracker provides realtime feedback to the parameter estimator so the signals can be cleaned quicker and more accurately based on prior estimates. Ex. 1006, 2:31-33.

136. MUD is a well-known, decades-old type of signal detection and processing that uses signal parameter estimates to identify the user signals and remove interfering signals. MUD uses the signal parameters like signal amplitude, delay, phase, power, frequency, and multipath structure to identify the signal from interfering signals. These signal parameters were well-known to allow accurate signal estimations and separations. In my opinion, a POSITA would have been motivated to incorporate Lilleberg's teachings of a parameter tracker that implements channel estimation using real-time feedback and output parameters into Zimmerman's receiver for processing multi-user signals for at least the following reasons.

137. ***First,*** Zimmerman discloses parameter estimation is performed uninterruptedly as it is performed in a "self-bootstrapping, continuous" mode of operation. Ex. 1005, 25. Additionally, Zimmerman discloses that it is configured to enable tracking parameter estimates, as "estimation techniques could be used in a tracking mode, where the estimate is updated over time using previous estimates" and implementing it using a "LMS-type amplitude-tracking loops to the CCPLL interference canceller" to perform "adaptive noise-cancelling device." Zimmerman, however, does not expressly teach the real-time tracking structure of the parameter tracking unit includes the output of the parameter tracking unit is used as feedback

for successive parameter estimates where the outputs are the received power, the phase of the oscillator for each of the transmitted signals, the timing offset relative to the base station clock and transmission distance, the carrier frequency offset and the multipath structure. Lilleberg, on the other hand, teaches that a real-time parameter tracking unit that includes feedback for successive parameter estimates for channel estimation where the outputs include "amplitude and the delay" as well as "phases," "power," frequency and multipath structure, and that this was well-known. Ex. 1006, 2:1-6, 3:19-47. A POSITA would therefore be motivated to give effect to Zimmerman's teaching of parameter tracking by incorporating Lilleberg's teachings of the output parameters and feedback of the parameter tracking unit. In addition, using a parameter tracking unit that includes feedback outputs of the received power, the phase of the oscillator for each of the transmitted signals, the timing offset relative to the base station clock and transmission distance, the carrier frequency offset and the multipath structure would have been a mere design choice. A POSITA would have known that using more parameters would result in better estimates, so a POSITA would be motivated to use received power, the phase of the oscillator for each of the transmitted signals, the timing offset relative to the base station clock and transmission distance, the carrier frequency offset and the multipath structure as parameters.

138. ***Second***, in my opinion, a POSITA would have been motivated to use a parameter tracking unit that includes feedback and tracking the parameters of the received power, the phase of the oscillator for each of the transmitted signals, the timing offset relative to the base station clock and transmission distance, the carrier frequency offset and the multipath structure because that would be an efficient method for processing parameter estimates from Zimmerman's parameter estimator. In my opinion, a POSITA would have been aware of the benefits of using a parameter tracking unit with a feedback output and using received power, the phase of the oscillator for each of the transmitted signals, the timing offset relative to the base station clock and transmission distance, the carrier frequency offset and the multipath structure. In my opinion, a POSITA would have known this was more efficient and significantly faster than performing parameter estimates without any feedback or tracking. The benefits of feedback processing and tracking had long been known by the filing date of the '505 patent. Lilleberg expressly discloses that these benefits included quicker processing and cleaning of signals, as well as more accurate estimates based on prior estimates. Ex. 1006, 2:31-33.

139. In my opinion, a POSITA would also be motivated by the fact that efficiency and speed were very important and desirable for processing wireless communications. As wireless communication speeds and bandwidth have increased,

it is necessary for the processing of such signals to become more efficient in order to process the increased amount of data in real-time. Because Zimmerman and Lilleberg describe detecting and decoding wireless signals containing data, a POSITA would have found it highly desirable to perform such processing as efficiently and quickly as possible in order to maximize bandwidth. Lilleberg expressly discloses that these benefits are achieved by using its parameter tracking unit. Ex. 1006, 2:31-33.

140. Finally, in my opinion a POSITA would have had a reasonable expectation of success. Both Zimmerman and Lilleberg describe the same process of performing MUD and then separating the signals. Indeed, both Zimmerman and Lilleberg describe similar, well-known methods of for parameter estimating. For example, both Hottinen and Lilleberg disclose parameter estimators and the benefit of tracking prior parameter estimates. Ex. 1005, 19, 25; Ex. 1006, 2:31-33. These were well-known parameter estimators and decoders and Lilleberg discloses that a parameter tracker including feedback outputs of the received power, the phase of the oscillator for each of the transmitted signals, the timing offset relative to the base station clock and transmission distance, the carrier frequency offset and the multipath structure was already prior art. Thus, in my opinion it would have been well-within the skill of a POSITA to implement Zimmerman's parameter estimator

using Lilleberg's teachings regarding parameter selection and parameter tracking, since such implementation was well known and conventional.

141. Finally, in my opinion Zimmerman, Lilleberg, and the '505 patent are analogous art because all three are directed to the same field of MUD and parameter estimation, that is, processing a data stream from multiple users using signal parameters for detection.

10. Claim 1

(a) 1pre

142. In my opinion Zimmerman discloses this element.

143. ***"In a multi-user detection system in which interfering signals are purposely allowed to exist":*** Zimmerman discloses a "multiaccess communication system" that "permit[s] multiple users to share the same or overlapping frequency assignments" (*i.e.*, "**multi-user detection system in which interfering signals are purposely allowed to exist**"). Ex. 1005, Abstract. Zimmerman discloses that the multi-user signals are detected by "use of interference cancelling receivers to receive each user's desired signal in the presence of interference" (*i.e.*, "**multi-user detection system**"). The multi-user detection system is shown below in Fig. 1 where the multiple users transmit multiple interfering signals over the same transmission channel to a receiver that includes an interference canceller using parameter estimations to separate the signals using a demodulator.

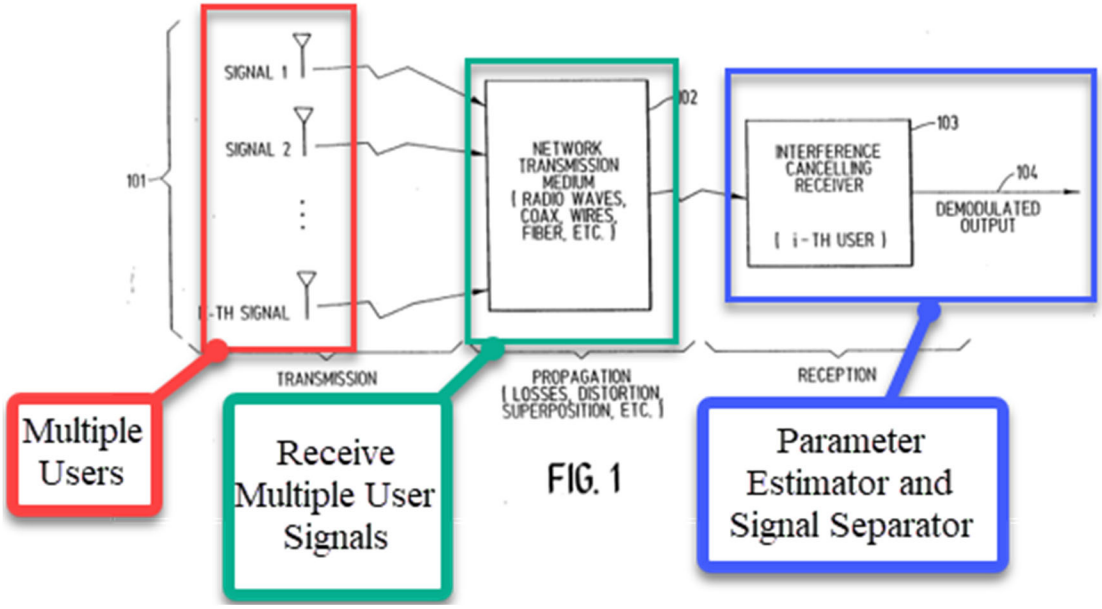

FIG. 1

144. Accordingly, Zimmerman discloses this element.

(b) 1a

145. In my opinion, Zimmerman discloses this element.

146. "***a parameter estimation unit for use in conjunction with a signal separation unit***": Zimmerman discloses "independent interference estimators 105d are provided for each of the interference signals from the family of signals" (*i.e.*, "**a parameter estimation unit**"). Ex. 1005, 19. Zimmerman notes that the interference estimator estimates signal parameters as the "[e]stimation of the amplitudes of the received signals in our interference cancelling receivers is, in fact, a way of estimating the channel propagation loss of each signal." Ex. 1005, 19. Zimmerman further discloses that the "receiver separates interfering signals by means of estimating the propagation loss" (*i.e.*, "**parameter estimation unit for use in**

conjunction with a signal separation unit"). *Id*. Zimmermann discloses that "[i]nterfering signals would then be separated by identifying the channel loss characteristics associated with each of them" (*i.e.*, "**signal separation unit**"). Ex. 1005, 21. Zimmerman discloses that the signal separation is performed by a demodulator and output selector assembly and "a demodulator/estimator 105c, 105d is needed for each interfering signal" (*i.e.*, "**parameter estimation unit for use in conjunction with a signal separation unit**"). *Id*., 15. I show in annotated Fig. 4 of Zimmerman below the interference estimator assembly (*i.e.*, "**parameter estimation unit**") and demodulator and output selector assembly (*i.e.*, "**signal separation unit**"):

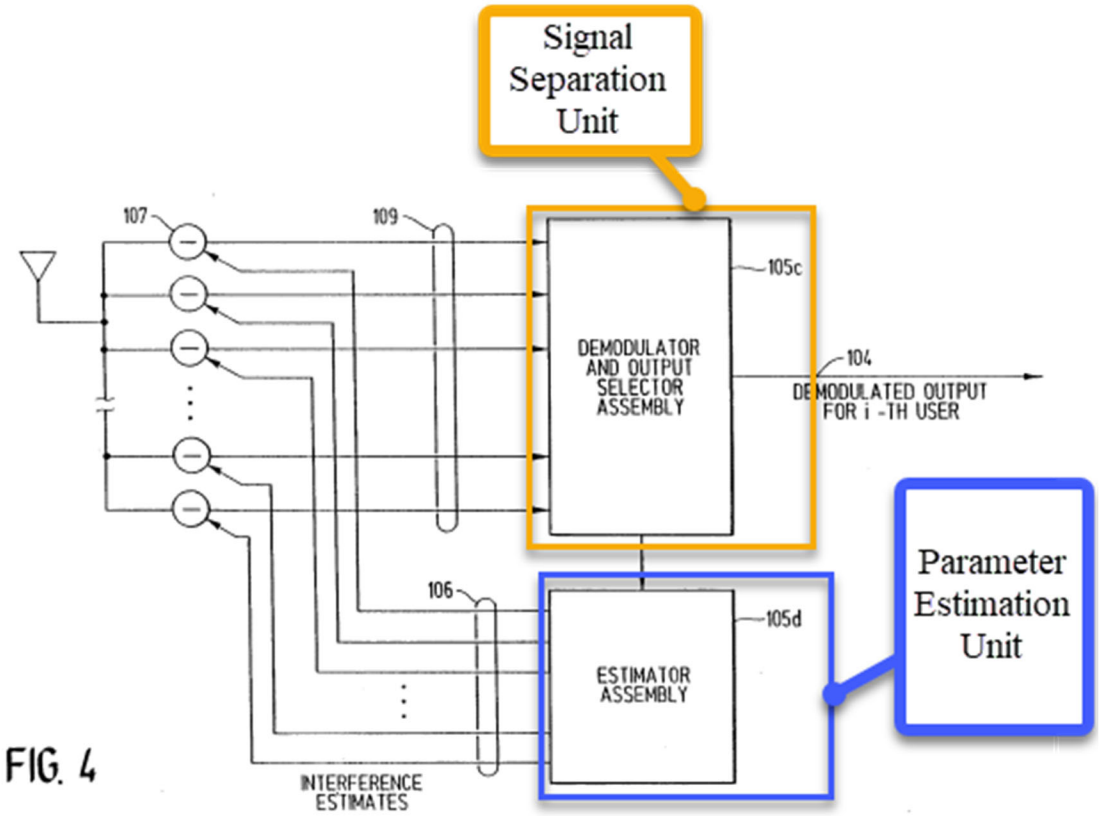

147. ***"each received signal has associated channel transfer functions":*** Zimmerman discloses that each received signal has signal parameters as the "[e]stimation of the amplitudes of the received signals in our interference cancelling receivers is, in fact, a way of estimating the channel propagation loss of each signal." Ex. 1005, 19. Zimmerman includes a "phase detector 121, loop gain and filter 122, and a numerically controlled oscillator (NCO) 123" as well as "amplitude estimator" using the known signal parameters as inputs for interference estimation and separation (*i.e.*, "**associated channel transfer functions**"). *Id.*, 55. A POSITA would understand that each of these is a known characteristic of a channel function.

148. Accordingly, Zimmerman discloses this element.

(c) 1b

149. In my opinion, Zimmerman discloses this element. Zimmerman discloses the use of a "phase-locked loop (PLL) of conventional design, comprised of a phase detector 121, loop gain and filter 122, and a numerically controlled oscillator (NCO) 123" as well as "amplitude estimator" (*i.e.,* **"signal processor"**). Ex. 1005, 55. A POSITA would understand that a PLL is a type of signal processor and is implemented using a signal processor. Zimmerman processes the signal to determine known signal parameters like amplitude, phase, time delay, and multipath structure (*i.e.*, "**associated channel transfer functions**"). *Id*.

150. Accordingly, Zimmerman discloses this element.

(d) 1c

151. I understand that this claim limitation is subject to means plus function, and in my opinion the corresponding function is: providing uninterrupted estimates of the channel transfer function parameters on a real-time basis by first deriving the estimated channel transfer function for each of said interfering signals and corresponding structure: parameter tracking unit and equivalents thereof. *See, e.g.*, Ex. 1001, 5:20-40, 6:9-23, 7:45-8:40, Fig. 1, Fig. 3, Fig. 4 (parts 90, 90', 90'). In my opinion, Zimmerman in combination with Lilleberg renders obvious this element.

152. ***"providing uninterrupted estimates of the channel transfer function parameters on a real-time basis by first deriving the estimated channel transfer function for each of said interfering signals***": Zimmerman discloses the interference estimate function (i.e., "estimates of the channel transfer function parameters") are performed uninterruptedly as the estimates are performed in a "self-bootstrapping, continuous" mode of operation (i.e., "providing uninterrupted estimates … on a real-time basis"). Ex. 1005, 25. Zimmerman discloses using the known signal parameters as the "[e]stimation of the amplitudes of the received signals in our interference cancelling receivers is, in fact, a way of estimating the channel propagation loss of each signal." Ex. 1005, 19. Zimmerman includes a "phase detector 121, loop gain and filter 122, and a numerically controlled oscillator (NCO) 123" as well as "amplitude estimator" using the known signal parameters as inputs for interference estimation and separation (i.e., "by first deriving the estimated channel transfer function for each of said interfering signals"). Id., 55.

153. ***"parameter tracking unit and equivalents thereof***": Zimmerman discloses "estimation techniques could be used in a tracking mode, where the estimate is updated over time using previous estimates" and implementing it using a "LMS-type amplitude-tracking loops to the CCPLL interference canceller" to perform "adaptive noise-cancelling device." (i.e., "parameter tracking unit"). Ex. 1005, 21, 24. Zimmerman also discloses that the tracking loop is coupled to the

signal processor, as the signal processor accesses the tracking loop and previous estimates so "the estimate is updated over time using previous estimates" (i.e., "coupled to said channel transfer function determining signal processor"). Ex. Zimmerman, 21, 55.

154. While Zimmerman does not expressly disclose the implementation detail regarding the structure of the parameter tracker used by the multi-user detector to achieve real-time estimation and tracking, Lilleberg discloses a parameter tracking unit for channel estimation where the parameter tracking unit outputs "amplitude and the delay" as well as "phases," "power," frequency and multipath structure. Ex. 1006, 2:1-6, 3:19-47. As shown in Fig. 2, Lilleberg discloses that the channel parameter estimates from EST 23 are fed back to EST 20 to be tracked and used for the further channel parameter estimates.

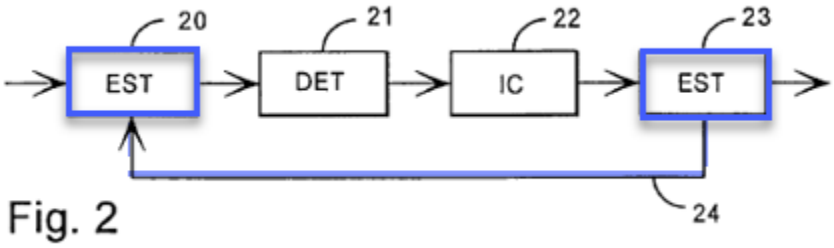

Fig. 2

155. As discussed above in Section VII.B.1, in my opinion it would have been obvious to combine Zimmerman with Lilleberg, and Zimmerman in combination with Lilleberg render obvious this claim limitation.

11. Claim 3

156. In my opinion, Zimmerman discloses this claim. ***"the multi-user detection system includes providing an acquisition channel":*** Zimmerman discloses "acquisition is a two-stage process" and includes the channel that "propagate corresponding signals (Signal 1, Signal 2 ... Signal K) via" the channel for an acquisition stage (*i.e.*, "**acquisition channel**"). Ex. 1005, 14. Additionally, Zimmerman discloses "resultant signals are received by an interference cancelling receiver 103, or a plurality of such receivers and demodulated output for a selected signal is available on line 104 for the 72t h user in a family of multiple users." *Id*. Zimmerman Fig. 1 shows the acquisition channel propagates Signal 1 in the acquisition stage.

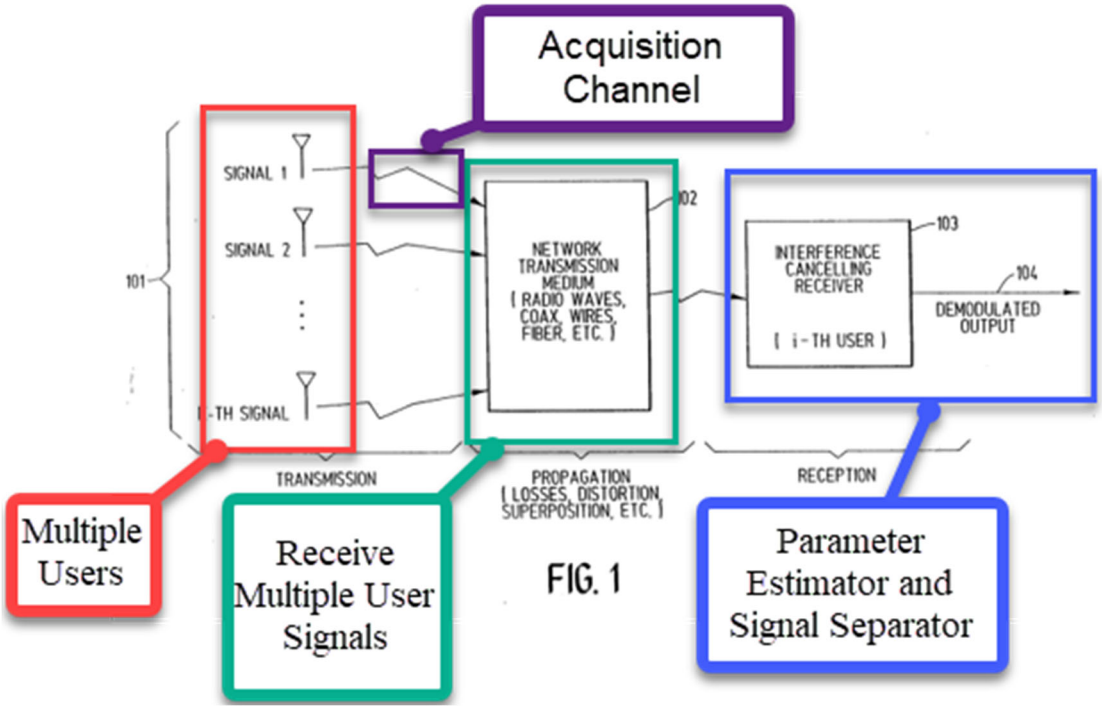

FIG. 1

157. I understand that in its infringement contentions in the district court litigation, Patent Owner mapped the acquisition channel to "Synchronization Signal Block" in "LTE" and the traffic channel to "connected mode" in "LTE" (Ex. 1009, Ex. 3 at 33), which a POSITA would understand is the same as the acquisition stage and connection stage disclosed in Zimmerman. Zimmerman, 14.

158. ***"the first derived estimated channel transfer function is derived from acquisition channel parameters":*** Zimmerman discloses performing the interference estimate on the signal from the acquisition channel by using one of the "two identically designed PLL's … during acquisition" (*i.e.*, "**first derived estimated channel transfer function is derived from acquisition channel parameters**"). *Id.*, 27. The PLL in Zimmerman using the signal parameters or the acquisition channel signal as it includes a "phase detector 121, loop gain and filter 122, and a numerically controlled oscillator (NCO) 123" as well as "amplitude estimator" using the known signal parameters as inputs for interference estimation and separation. *Id.*, 55.

159. Accordingly, Zimmerman discloses this claim.

12. Claim 4

160. In my opinion, Zimmerman discloses this claim. ***"multi-user detection system includes a tracking unit for acquired signals":*** Zimmerman discloses "estimation techniques could be used in a tracking mode, where the estimate is updated over time using previous estimates" and implementing it using a "LMS-type

amplitude-tracking loops to the CCPLL interference canceller" to perform "adaptive noise-cancelling device." (*i.e.*, "**tracking unit for acquired signals**"). Ex. 1005, 21, 24. Zimmerman tracks "both the amplitude and phase of the interfering signals" so "the full separation of the interfering signals can be exploited. Ex. 1005, 18. Additionally, Zimmerman tracks signal "power" to "maintain a strict power hierarchy" in the estimates and separation. *Id*., 19.

161. ***"in the presence of a new signal in the acquisition channel of said parameter estimation unit estimates the channel transfer function prior to signal switching from an acquisition channel to the traffic channel":*** Zimmerman discloses that each received signal has signal parameters as the "[e]stimation of the amplitudes of the received signals in our interference cancelling receivers is, in fact, a way of estimating the channel propagation loss of each signal" (i.e., "**parameter estimation unit**"). Ex. 1005, 19. Zimmerman includes a "phase detector 121, loop gain and filter 122, and a numerically controlled oscillator (NCO) 123" as well as "amplitude estimator" using the known signal parameters as inputs for interference estimation (*i.e.*, "**new signal in the acquisition channel**"). *Id*. Zimmerman discloses "estimation techniques could be used in a tracking mode, where the estimate is updated over time using previous estimates" and implementing it using a "LMS-type amplitude-tracking loops to the CCPLL interference canceller" to perform "adaptive noise-cancelling device." (*i.e.*, "**estimates the channel transfer function**"). Ex.

1005, 21, 24. Zimmerman tracks "both the amplitude and phase of the interfering signals" so "the full separation of the interfering signals can be exploited" and, after the acquisition stage, transmits the signal in the connected stage (*i.e.,* "**estimates the channel transfer function prior to signal switching from an acquisition channel to the traffic channel**"). Ex. 1005, 18. Additionally, Zimmerman tracks signal "power" to "maintain a strict power hierarchy" in the estimates and separation. *Id*., 19.

162. ***"said parameter estimation unit parameters being passed to said tracking unit thereafter":*** Zimmerman discloses "estimation techniques could be used in a tracking mode, where the estimate is updated over time using previous estimates" and implementing it using a "LMS-type amplitude-tracking loops to the CCPLL interference canceller" to perform "adaptive noise-cancelling device." Ex. 1005, 21, 24. Zimmerman tracks "both the amplitude and phase of the interfering signals" so "the full separation of the interfering signals can be exploited." Ex. 1005, 18. Additionally, Zimmerman tracks signal "power" to "maintain a strict power hierarchy" in the estimates and separation. *Id*., 19.

163. Accordingly, Zimmerman discloses this claim.

164. In my opinion, this claim would have also been obvious in view of Lilleberg. Lilleberg discloses multi-user detectors that use parameter estimators and

trackers "utiliz[ing] feedback 24 from the second estimation means 23 to the first estimation means 20." Ex. 1006, 3:39-47. Lilleberg discloses that "[e]stimation results obtained from the second estimation means can thus be utilized when preliminary estimates are computed … by supplying the channel parameters obtained from the second estimation means concerning sample b_n to the first estimation means as default values for computing preliminary channel parameters for the next sample b_{n+1}." Ex. 1006, 3:39-47. The parameter estimator and tracker in Lilleberg are shown below:

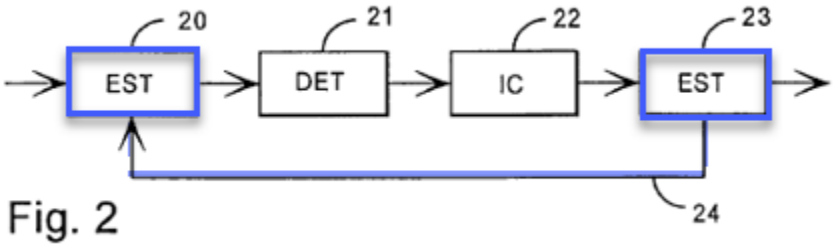

Fig. 2

165. As discussed above in Section VII.B.1, in my opinion a POSITA would have found it obvious to combine Zimmerman and Lilleberg, and Zimmerman in combination with Lilleberg render obvious this claim.

13. Claim 5

166. In my opinion, Zimmerman discloses this claim. ***"a traffic channel":*** Zimmerman discloses a channel that "propagate[s] corresponding signals (Signal 1, Signal 2 ... Signal K) via" the channel (*i.e.*, "**traffic channel**"). Ex. 1005, 14. This connected mode (i.e., "traffic channel") is different from the acquisition or tracking

mode ("acquisition channel"). *Id.*, 19. Additionally, Zimmerman discloses "resultant signals are received by an interference cancelling receiver 103, or a plurality of such receivers and demodulated output for a selected signal is available on line 104 for the i th user in a family of multiple users." *Id.* Zimmerman Fig. 1 shows the traffic channel that propagates Signal 2.

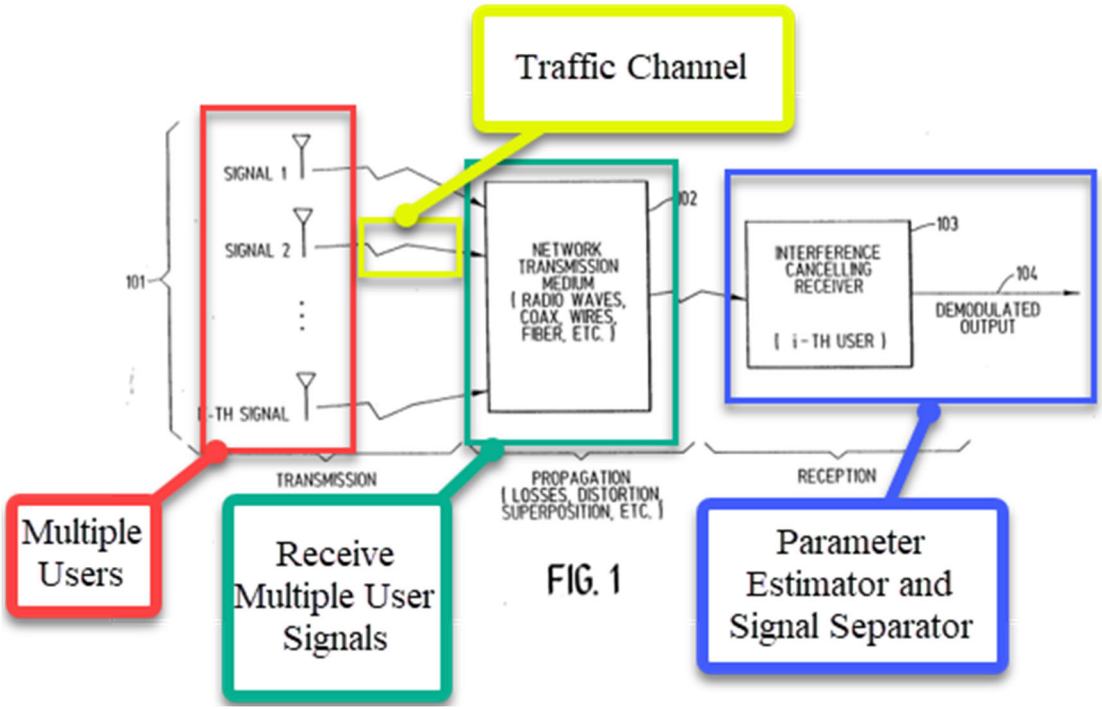

FIG. 1

.

167. ***"for said traffic channel phase is tracked without utilization of the estimates from the acquisition channel":*** Zimmerman discloses "estimation techniques could be used in a tracking mode, where the estimate is updated over time using previous estimates" and implementing it using a "LMS-type amplitude-tracking loops to the CCPLL interference canceller" to perform "adaptive noise-

cancelling device." (*i.e.*, "**for said traffic channel phase is tracked**"). Ex. 1005, 21, 24. Zimmerman also discloses that the "interference estimates are subtracted from a single input channel" so any estimates from one channel would not be used for the other channels (*i.e.*, "**without utilization of the estimates from the acquisition channel**"). Ex. Zimmerman, 14, 55.

168. I understand that in its infringement contentions in the district court litigation, Patent Owner mapped the acquisition channel to the "Synchronization Signal Block" and the traffic channel to "connected mode" in "LTE" (Ex. 1009, Ex. 3 at 33), which a POSITA would understand is the same as the acquisition stage and connection stage disclosed in Zimmerman. Zimmerman, 14.

169. Accordingly, Zimmerman discloses this claim.

14. Claim 7

170. In my opinion, Zimmerman discloses this claim. Zimmerman discloses "estimation techniques could be used in a tracking mode, where the estimate is updated over time using previous estimates" and implementing it using a "LMS-type amplitude-tracking loops to the CCPLL interference canceller" to perform "adaptive noise-cancelling device" (*i.e.*, "**after initial estimate generation**"). Ex. 1005, 21, 24. Zimmerman discloses after the initial estimate is generated, tracking the channel parameters and signals for all channel (*i.e.*, "**multi-user detection system**

simultaneously tracks all signals in a traffic channel"). Ex. 1005, 21, 24. Accordingly, Zimmerman discloses this claim.

171. In my opinion, this claim would have also been obvious in view of Lilleberg. Lilleberg discloses multi-user detectors that use parameter estimators and tracking "two simultaneously received signals that comprise time slots 60-63 and 64-67 respectively." Ex. 1006, 5:34-35. The parameter estimator and tracker in Lilleberg are shown below:

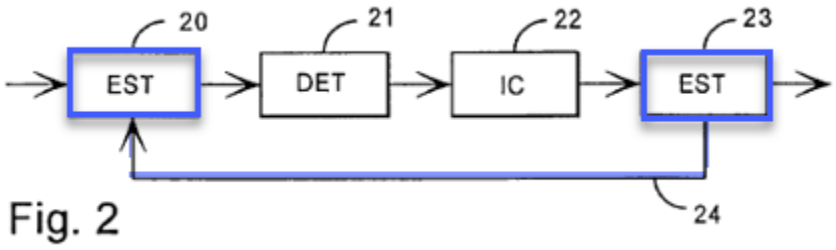

Fig. 2

172. As discussed above in Section VII.B.1, in my opinion a POSITA would have found it obvious to combine Zimmerman and Lilleberg, and Zimmerman in combination with Lilleberg renders obvious this claim.

15. Claim 8

173. In my opinion, Zimmerman discloses this claim. Zimmerman discloses "estimation techniques could be used in a tracking mode, where the estimate is updated over time using previous estimates" and implementing it using a "LMS-type amplitude-tracking loops to the CCPLL interference canceller" to perform "adaptive noise-cancelling device." (*i.e.*, "**simultaneous tracking**"). Ex. 1005, 21, 24. A

POSITA would understand that adaptive noise-cancelling would perform simultaneous tracking as it is updating the estimates in real time using previous estimates. Zimmermann discloses that "[i]nterfering signals would then be separated by identifying the channel loss characteristics associated with each of them" (*i.e.*, "**blocks for parallel recreation of the training signal portions of the traffic channel signal, each parallel processing block isolating a different signal in said traffic channel**"). Ex. 1005, 21. Zimmerman discloses that the signal separation is performed by a demodulator and output selector assembly and "a demodulator/estimator 105c, 105d is needed for each interfering signal" *Id*., 15. Figure 4 of Zimmerman shows the signal separation is performed by a demodulator and output selector assembly :

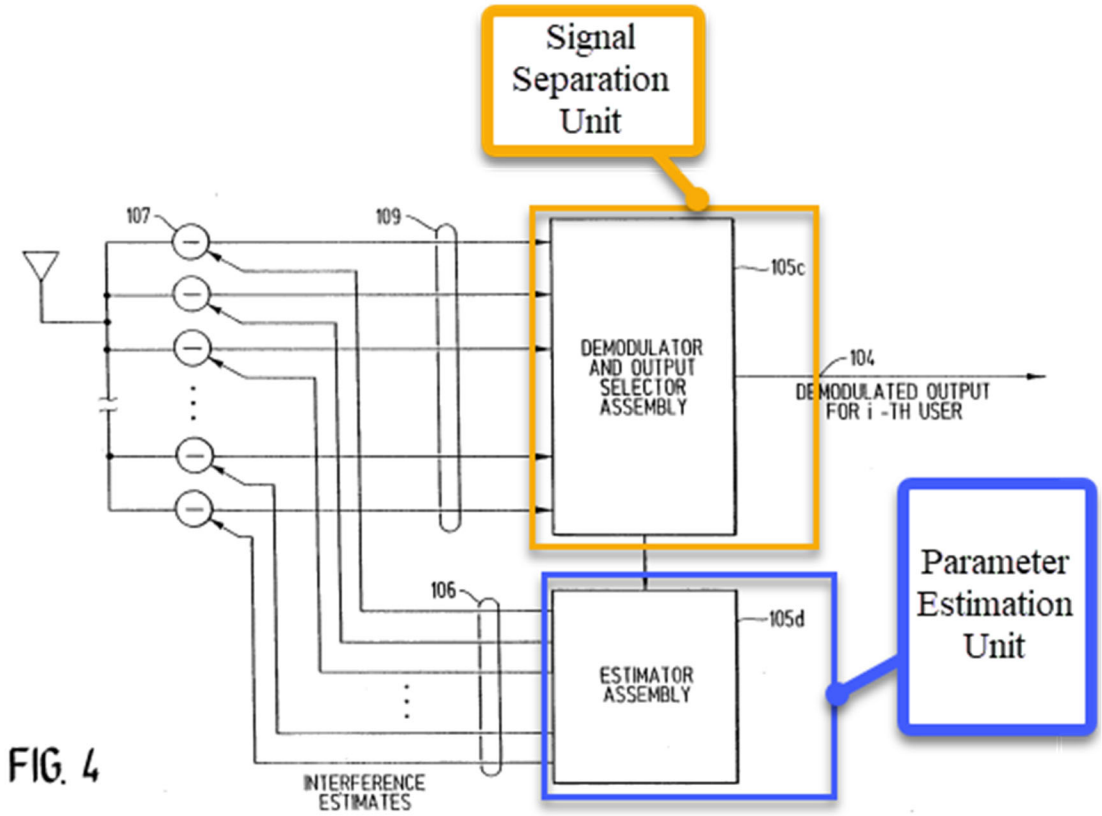

174. Additionally, Lilleberg discloses "[t]he method of the invention can also be applied in a multistage receiver in which all the users received are processed in parallel" (*i.e.*, "**simultaneous tracking**"). Ex. 1006, 4:36-41. Lilleberg discloses "the receiver comprises three successive receiver stages 47-49, and in each stage are estimated the symbol estimates of the incoming signal. The later stages always produce a more accurate result than the earlier stages" (*i.e.*, "**blocks for parallel recreation of the training signal portions of the traffic channel signal, each parallel processing block isolating a different signal in said traffic channel**"). *Id.*, 4:47-52.

16. Claim 9

(a) 9pre

175. *See* 1pre. In my opinion, Zimmerman discloses this element.

(b) 9a

176. *See* 1a. In my opinion, Zimmerman discloses this element.

(c) 9b

177. *See* 1b. In my opinion, Zimmerman discloses this element.

(d) 9c

178. *See* 1c. In my opinion, Zimmerman in combination with Lilleberg renders obvious this element.

(e) 9d

179. *See* Claim 4. I understand that Claim element 9c is the same as Claim 4 except it includes an additional limitation "all received signals having training portions." In my opinion, Zimmerman similarly discloses this claim limitation.

180. ***"all received signals having training portions":*** Zimmerman discloses that each received signal has signal parameters as the "[e]stimation of the amplitudes of the received signals in our interference cancelling receivers is, in fact, a way of estimating the channel propagation loss of each signal" (*i.e.*, "**all received signals having training portions**"). Ex. 1005, 19.

(f) 9e

181. In my opinion, Zimmerman discloses this claim element. ***"a second interfering signal being and assigned to said traffic channel":*** Zimmerman discloses the traffic channel including multiple interfering signals as it "both mutually interfering signals could potentially be received" by the interference estimator. Ex. 1005, 19.

182. ***"said parameter estimation unit recreating the training signal portion of every received signal prior to the last received signal":*** Zimmerman discloses "estimation techniques could be used in a tracking mode, where the estimate is updated over time using previous estimates" and implementing it using a "LMS-type amplitude-tracking loops to the CCPLL interference canceller" to perform "adaptive noise-cancelling device" where the signal is recreated (i.e., "said parameter estimation unit recreating the training signal portion of every received signal"). Ex. 1005, 21, 24. Zimmermann discloses that "[i]nterfering signals would then be separated by identifying the channel loss characteristics associated with each of them" (i.e., "prior to the last received signal"). Ex. 1005, 21. A POSITA would understand that interference cancellation sequentially uses every prior received signal to estimate a newly received signal as Zimmerman discloses "the estimate is updated over time using previous estimates" and interference cancellation is "adaptive noise-cancelling." Ex. 1005, 21, 24.

183. ***"subtracting the recreated training signals from the training portion of the last received signal to provide an estimate solely due to the last received signal during the training signal portion":*** Zimmerman discloses "subtracting an estimate of interfering signals from the incoming corrupted signal to produce a clean output" (i.e., "subtracting the recreated training signals from the training portion of the last received signal "). Ex. 1005, 22. Zimmermann discloses that "[i]nterfering signals would then be separated by identifying the channel loss characteristics associated with each of them" and "a demodulator/estimator 105c, 105d is needed for each interfering signal" (i.e., "provide an estimate solely due to the last received signal during the training signal portion"). Id., 15, 21. A POSITA would understand that interference cancellation sequentially provides an estimate solely due to last received signal as every prior received signal is used to estimate a newly received signal as Zimmerman discloses "the estimate is updated over time using previous estimates" and interference cancellation is "adaptive noise-cancelling." Ex. 1005, 21, 24.

184. "***thus to allow an estimate of the last signal from which to calculate parameters of the last signal***": Zimmermann discloses that "[i]nterfering signals would then be separated by identifying the channel loss characteristics associated with each of them" and "a demodulator/estimator 105c, 105d is needed for each

interfering signal" (i.e., "allow an estimate of the last signal from which to calculate parameters of the last signal") Id., 15, 21.

185. Additionally, Lilleberg discloses "[t]he method of the invention can also be applied in a multistage receiver in which all the users received are processed in parallel" (*i.e.*, "**simultaneous tracking**"). Ex. 1006, 4:36-41. Lilleberg discloses "the receiver comprises three successive receiver stages 47-49, and in each stage are estimated the symbol estimates of the incoming signal. The later stages always produce a more accurate result than the earlier stages" (*i.e.*, "**provide an estimate solely due to the last received signal during the training signal portion**"). *Id.*, 4:47-52.

186. Accordingly, in my opinion, Zimmerman discloses this claim element.

VIII. Secondary Considerations of Non-obviousness

187. I am not aware of any secondary considerations, or so-called "objective indicia of non-obviousness" for the challenged claims.

188. Secondary considerations could include things like commercial success of a product due to the merits of the claimed invention; a long felt need for the solution provided by the claimed invention; unsuccessful attempts by others to find the solution provided by the claimed invention; copying of the claimed invention by others; unexpected and superior results from the claimed invention; acceptance by others of the claimed invention as shown by praise from others in the field or from

the licensing of the claimed invention; teaching away from the conventional wisdom in the art at the time of the invention; independent invention of the claimed invention by others before or at about the same time as the named inventor thought of it; and other evidence tending to show obviousness.

189. Patent Owner has not identified any such secondary considerations, and I am not independently aware of any. For example, Patent Owner has no commercial products embodying the '505 patent that I am aware of. Additionally, as discussed throughout, the claimed features reflect predictable results of combining known elements according to their known functions, and thus, there are no unexpected and superior results from the claimed invention. Also, there are no licenses of the '505 patent of which I am aware.

190. Further, even if Patent Owner were to assert that secondary considerations exist, given the strong reasons that the challenged claims are obvious in light, including the motivations to combine the references set forth above, I do not believe any such secondary considerations would rise to the level of overcoming the invalidity opinions I have expressed.

191. I understand that Patent Owner may address the issue of secondary considerations more fully in the future. I reserve the right to respond to any specific bases for such secondary considerations that Patent Owner may identify.

IX. Conclusion

192. For the reasons set forth above, I believe claims 1, 3, 4, 5, 7, 8, and 9 of the ’505 patent are unpatentable in view of the prior art. In signing this declaration, I understand that the declaration will be filed as evidence in a contested case before the Patent Trial and Appeal Board of the United States Patent and Trademark Office. I acknowledge that I may be subject to cross-examination in this case and that cross-examination will take place within the United States. If cross-examination is required of me, I will appear for cross-examination within the United States during the time allotted for cross-examination.

193. I declare that all statements made herein of my knowledge are true, that all statements made on information and belief are believed to be true, and that these statements were made with the knowledge that willful false statements and the like so made are punishable by fine or imprisonment, or both, under Section 1001 of Title 18 of the United States Code.

Dated: August 1, 2024 By: _____
Paul S. Min, Ph.D.