PUBLIC VERSION

UNITED STATES INTERNATIONAL TRADE COMMISSION

Washington, D.C.

In the Matter of **CERTAIN PHOTODYNAMIC THERAPY SYSTEMS, COMPONENTS THEREOF, AND PHARMACEUTICAL PRODUCTS USED IN COMBINATION WITH THE SAME**	**Inv. No. 337-TA-1411**

ORDER NO. 18: CONSTRUING CERTAIN CLAIM TERMS

(March 4, 2025)

Table of Contents

I. INTRODUCTION 1

II. IN GENERAL 2

III. RELEVANT LAW 2

IV. THE ASSERTED PATENTS 5

- A. The ’512 Patent 5
- B. The ’028 Patent 7

V. LEVEL OF ORDINARY SKILL IN THE ART 10

VI. CLAIM CONSTRUCTION 13

- A. Construction of Agreed-Upon Claim Terms 13
- B. Construction of the Disputed Claim Terms 14
  1. “a higher intensity of light is emitted proximate the second edges compared to the intensity of light emitted not proximate the second edges” 14
  2. “photodynamically diagnosing or treating a patient” 23
  3. “nested hinges” 29
  4. “the five panels are individually configurable to control illumination from each of the five panels” 35
  5. “within approximately four inches of the treatment surface” 40
  6. “a recess”/“the recess” 46

VII. Order 47

I. INTRODUCTION

This Investigation was instituted by the Commission on August 1, 2024 to determine whether the importation into the United States, the sale for importation, or sale within the United States after importation of certain photodynamic therapy systems, components thereof, and pharmaceutical products used in combination with the same violates section 337 of the Tariff Act of 1930, as amended, due to infringement of U.S. Patent Nos. 11,697,028 ("the '028 patent") and 11,446,512 ("the '512 patent") (collectively, "the Asserted Patents"). *See* 89 Fed. Reg. 62,790 (Aug. 1, 2024). Sun Pharmaceutical Industries, Inc. ("Sun Pharma") is the complainant. The Notice of Institution named the following entities as respondents: Biofrontera Inc., Biofrontera Pharma GmbH, and Biofrontera Bioscience GmbH (collectively, "Biofrontera"). *Id*.

The parties have proposed terms from both of the Asserted Patents for construction. A *Markman* hearing was held on November 21, 2024. Pursuant to the Ground Rules, the parties submitted an updated Joint Claim Construction Chart.[1]

On October 22, 2024, I granted Sun Pharma's motion to amend the complaint and investigation to add claims 17 and 18 of the '512 patent. Order No. 8, *not reviewed,* Comm'n Notice (Nov. 20, 2024).

[1] For convenience, the briefs and chart submitted by the parties are referred to hereafter as:

CMIB	Sun Pharma's Initial *Markman* Brief
CMRB	Sun Pharma's Reply *Markman* Brief
RMIB	Biofrontera's Initial *Markman* Brief
RMRB	Biofrontera's Reply *Markman* Brief
JC	Updated Joint Proposed Claim Construction Chart

II. IN GENERAL

The claim terms construed in this Order are done so for the purposes of this section 337 Investigation. Those terms not in dispute need not be construed. *See Vanderlande Indus. Nederland BV v. Int'l Trade Comm'n*, 366 F.3d 1311, 1323 (Fed. Cir. 2004) (noting that the administrative law judge need only construe disputed claim terms).

III. RELEVANT LAW

"An infringement analysis entails two steps. The first step is determining the meaning and scope of the patent claims asserted to be infringed. The second step is comparing the properly construed claims to the device accused of infringing." *Markman v. Westview Instruments, Inc.*, 52 F.3d 967, 976 (Fed. Cir. 1995) (*en banc*) (internal citations omitted), *aff'd*, 517 U.S. 370 (1996). Claim construction is a "matter of law exclusively for the court." *Id.* at 970-71. "The construction of claims is simply a way of elaborating the normally terse claim language in order to understand and explain, but not to change, the scope of the claims." *Embrex, Inc. v. Serv. Eng'g Corp.*, 216 F.3d 1343, 1347 (Fed. Cir. 2000).

Claim construction focuses on the intrinsic evidence, which consists of the claims themselves, the specification, and the prosecution history. *See Phillips v. AWH Corp.*, 415 F.3d 1303, 1314 (Fed. Cir. 2005) (*en banc*); *see also Markman*, 52 F.3d at 979. As the Federal Circuit in *Phillips* explained, courts must analyze each of these components to determine the "ordinary and customary meaning of a claim term" as understood by a person of ordinary skill in the art at the time of the invention. 415 F.3d at 1313. "Such intrinsic evidence is the most significant source of the legally operative meaning of disputed claim language." *Bell Atl. Network Servs., Inc. v. Covad Commc'ns Grp., Inc.*, 262 F.3d 1258, 1267 (Fed. Cir. 2001).

"It is a 'bedrock principle' of patent law that 'the claims of a patent define the invention to which the patentee is entitled the right to exclude.'" *Phillips*, 415 F.3d at 1312 (quoting

Innova/Pure Water, Inc. v. Safari Water Filtration Sys., Inc., 381 F.3d 1111, 1115 (Fed. Cir. 2004)). "Quite apart from the written description and the prosecution history, the claims themselves provide substantial guidance as to the meaning of particular claims terms." *Id*. at 1314; *see also Interactive Gift Express, Inc. v. Compuserve Inc.*, 256 F.3d 1323, 1331 (Fed. Cir. 2001) ("In construing claims, the analytical focus must begin and remain centered on the language of the claims themselves, for it is that language that the patentee chose to use to 'particularly point[ ] out and distinctly claim[ ] the subject matter which the patentee regards as his invention.'"). The context in which a term is used in an asserted claim can be "highly instructive." *Phillips*, 415 F.3d at 1314. Additionally, other claims in the same patent, asserted or unasserted, may also provide guidance as to the meaning of a claim term. *Id.*

The specification "is always highly relevant to the claim construction analysis. Usually, it is dispositive; it is the single best guide to the meaning of a disputed term." *Id.* at 1315 (quoting *Vitronics Corp. v. Conceptronic, Inc.*, 90 F.3d 1576, 1582 (Fed. Cir. 1996)). "[T]he specification may reveal a special definition given to a claim term by the patentee that differs from the meaning it would otherwise possess. In such cases, the inventor's lexicography governs." *Id.* at 1316. "In other cases, the specification may reveal an intentional disclaimer, or disavowal, of claim scope by the inventor." *Id.* As a general rule, however, the particular examples or embodiments discussed in the specification are not to be read into the claims as limitations. *Id.* at 1323. In the end, "[t]he construction that stays true to the claim language and most naturally aligns with the patent's description of the invention will be . . . the correct construction." *Id.* at 1316 (quoting *Renishaw PLC v. Marposs Societa´ per Azioni*, 158 F.3d 1243, 1250 (Fed. Cir. 1998)).

In addition to the claims and the specification, the prosecution history should be examined, if in evidence. *Id.* at 1317; *see also Liebel-Flarsheim Co. v. Medrad, Inc.*, 358 F.3d 898, 913 (Fed.

Cir. 2004). The prosecution history can "often inform the meaning of the claim language by demonstrating how the inventor understood the invention and whether the inventor limited the invention in the course of prosecution, making the claim scope narrower than it would otherwise be." *Phillips*, 415 F.3d at 1317; *see also Chimie v. PPG Indus. Inc*., 402 F.3d 1371, 1384 (Fed. Cir. 2005) ("The purpose of consulting the prosecution history in construing a claim is to 'exclude any interpretation that was disclaimed during prosecution.'").

When the intrinsic evidence does not establish the meaning of a claim, then extrinsic evidence (*i.e.*, all evidence external to the patent and the prosecution history, including dictionaries, inventor testimony, expert testimony, and learned treatises) may be considered. *Phillips*, 415 F.3d at 1317. Extrinsic evidence is generally viewed as less reliable than the patent itself and its prosecution history in determining how to define claim terms. *Id.* at 1317. "The court may receive extrinsic evidence to educate itself about the invention and the relevant technology, but the court may not use extrinsic evidence to arrive at a claim construction that is clearly at odds with the construction mandated by the intrinsic evidence." *Elkay Mfg. Co. v. Ebco Mfg. Co.*, 192 F.3d 973, 977 (Fed. Cir. 1999).

If, after a review of the intrinsic and extrinsic evidence, a claim term remains ambiguous, the claim should be construed so as to maintain its validity. *Phillips*, 415 F.3d at 1327. Claims, however, cannot be judicially rewritten in order to fulfill the axiom of preserving their validity. *See Rhine v. Casio, Inc.*, 183 F.3d 1342, 1345 (Fed. Cir. 1999). Thus, "if the only claim construction that is consistent with the claim's language and the written description renders the claim invalid, then the axiom does not apply and the claim is simply invalid." *Id.*

A claim must also be definite. Pursuant to 35 U.S.C. § 112, second paragraph: "The specification shall conclude with one or more claims particularly pointing out and distinctly

claiming the subject matter which the applicant regards as his invention." 35 U.S.C. § 112, ¶ 2. In *Nautilus, Inc. v. Biosig Instruments, Inc.*, 572 U.S. 898 (2014), the Supreme Court held that "a patent is invalid for indefiniteness if its claims, read in light of the specification delineating the patent, and the prosecution history, fail to inform, with reasonable certainty, those skilled in the art about the scope of the invention." *Id.* at 901. A patent claim that is indefinite is invalid. 35 U.S.C. § 282(b)(3)(A).

IV. THE ASSERTED PATENTS

A. The '512 Patent

The '512 patent, entitled "Adjustable Illuminator for Photodynamic Therapy and Diagnosis," issued on September 20, 2022 to Thomas Boyajian, Mark Carota, and Brian Mazejka. The '512 patent is assigned to DUSA Pharmaceuticals, Inc.[2] The '512 patent generally relates "to an adjustable illumination device and method for photodynamic therapy to treat and/or diagnose several types of ailments in or near the skin or other tissues, such as those in a body cavity." Complaint at ¶ 60.

The '512 patent has 20 claims. Claims 1-3, 5, 8, 17, 18, and 20 have been asserted in this Investigation. The claims read as follows (with the disputed terms highlighted in **bold** and the agreed-upon term in *italics*):

1. A system for **photodynamically diagnosing or treating a patient**, comprising:

   an illuminator comprising at least five panels connected by **nested hinges on inner side surfaces of adjacent panels**,

   light sources disposed on surfaces of the at least five panels, the illuminator being configured to *uniformly illuminate a treatment surface* of the patient via the light sources;

[2] Sun Pharma represents that "[e]ffective March 31, 2024, DUSA merged with Sun Pharma and assigned all right, title, and interest in the '512 Patent to Sun Pharma." Complainant at ¶ 58.

one of the at least five panels being positioned as a center panel configured to face the treatment surface, and two or more of the at least five panels being configured to be angled relative to the center panel;

wherein each of the at least five panels has two first edges and two second edges shorter than the two first edges, and the light sources are arranged such that **a higher intensity of light is emitted proximate the second edges compared to the intensity of light emitted not proximate the second edges**.

2. The system of claim 1, wherein the illuminator is configured to *uniformly illuminate the treatment surface* when the treatment surface is at a distance of two to four inches from the illuminator.

3. The system of claim 1, wherein the illuminator is configured to output red light at a dose of about 30 J/cm^2 to 150 J/cm^2.

5. The system of claim 1, wherein a plurality of the light sources are configured to emit light having a wavelength in a range of 400 nm to 700 nm.

8. A method of **photodynamically diagnosing or treating a patient**, comprising:

administering 5-aminolevulinic acid (ALA) to the patient;

positioning an illuminator proximate to the patient, the illuminator comprising at least five panels connected by **nested hinges on inner side structures of adjacent panels**; and

uniformly illuminating a treatment surface of the patent with light sources disposed on the at least five panels of the illuminator,

wherein each of the at least five panels has two first edges and two second edges shorter that the two first edges, and the light sources are arranged such that a higher intensity of light is emitted proximate the second edges compared to the intensity of light emitted not proximate the second edges.

17. The method of claim 8, wherein at least one panel includes **a recess** configured to receive a flange of one of the **nested hinges**.

18. The method of claim 17, wherein **the recess** is positioned at an inner side surface of the at least one panel.

20. A system for **photodynamically diagnosing or treating a patient**, comprising:

an illuminator comprising at least five panels connected by **nested hinges on inner side surfaces of adjacent panel**s, the nested hinges being configured so as to allow continuous illumination across the at least five panels,

light sources disposed on surfaces of the at least five panels, the illuminator being configured to *uniformly illuminate a treatment surface* of the patient via the light sources;

one of the at least five panels being positioned as a center panel configured to face the treatment surface, and two or more of the at least five panels being configured to be angled relative to the center panel;

wherein each of the at least five panels has two first edges and two second edges shorter than the two first edges, and the light sources are arranged such that a higher intensity of light is emitted proximate the second edges compared to the intensity of light emitted not proximate the second edges.

B. The ’028 Patent

The ’028 patent, entitled “Adjustable Illuminator for Photodynamic Therapy and Diagnosis,” issued on July 11, 2023 to Thomas Boyajian, Mark Carota, and Brian Mazejka. The ’028 patent is assigned to DUSA Pharmaceuticals, Inc.[3] The ’028 patent “relates to an adjustable illumination device and method for photodynamic therapy to treat and/or diagnose several types of ailments in or near the skin or other tissues, such as those in a body cavity.” Complaint at ¶ 54.

The ’028 patent has 21 claims. Claims 1, 2, 4-6, 16, 17, and 19-21 have been asserted in this Investigation. The claims read as follows (with the disputed terms highlighted in **bold** and the agreed-upon term in *italics*):

1. A system for **photodynamically diagnosing or treating a patient**, comprising:

an illuminator comprising five panels connected by hinged structures on inner side surfaces of adjacent panels; and

light sources disposed on surfaces of the five panels, the illuminator being configured to *uniformly illuminate a treatment surface* of the patient via the light sources,

one of the five panels being positioned as a center panel configured to face the treatment surface, and two or more of the five panels being configured to be angled relative to the center panel,

wherein the five panels are positioned to allow treatment **within approximately four inches of the treatment surface**, and

wherein each of the five panels has two first edges and two second edges shorter than the two first edges, and the light sources are arranged such that **a higher intensity of light is**

[3] Sun Pharma represents that “[e]ffective March 31, 2024, DUSA merged with Sun Pharma and assigned all right, title, and interest in the ’028 Patent to Sun Pharma.” Complainant at ¶ 52.

emitted proximate the second edges compared to the intensity of light emitted not proximate the second edges.

2. The system of claim 1, wherein the illuminator is configured to output red light at a dose of 30 J/cm^2 to 150 J/cm^2.

4. The system of claim 1, wherein a plurality of the light sources are configured to emit light having a wavelength in a range of 400 nm to 700 nm.

5. A method of **photodynamically diagnosing or treating a patient**, comprising:

administering 5-aminolevulinic acid (ALA) to the patient;

positioning an illuminator proximate to the patient, the illuminator comprising five panels connected by hinged structures on inner side surfaces of adjacent panels; and

uniformly illuminating a treatment surface of the patent with light sources disposed on the five panels of the illuminator, the five panels being positioned to allow treatment **within approximately four inches of the treatment surface**,

wherein each of the five panels has two first edges and two second edges shorter that the two first edges, and the light sources are arranged such that **a higher intensity of light is emitted proximate the second edges compared to the intensity of light emitted not proximate the second edges**.

6. The method of claim 5, wherein the illuminating comprises outputting red light during at least part of the time when the treatment surface is illuminated.

16. A system for **photodynamically diagnosing or treating a patient** comprising:

a mobile base supported by at least four wheels;

a pillar perpendicular to the base;

a controller disposed to be supported by the pillar;

an arm mounted to a top portion of the pillar; and

an illuminator connected at an end to the arm, the arm being hinged to allow adjustment of a position of the illuminator relative to the base, the illuminator comprising:

five panels connected by hinged structures to allow continuous illumination across the five panels, wherein the **five panels are individually configurable to control illumination from each of the five panels**,

light sources disposed on surfaces of the five panels, the illuminator being configured to *uniformly illuminate a treatment surface* of the patient via the light sources, the light sources being configured to output light uniformly during at least part of a time when the treatment surface is illuminated, each of the five panels having two first edges and two

second edges shorter than the two first edges, the light sources arranged such that **a higher intensity of light is emitted proximate the second edges compared to the intensity of light emitted not proximate the second edges**, and

one of more fans mounted to at least one of the five panels.

17. The system of claim 16, wherein one of the five panels is positioned as a center panel configured to face the treatment surface, and two or more of the five panels are configured to be angled relative to the center panel.

19. The system of claim 16, wherein the light sources are configured to output red light during at least part of the time when the treatment surface is illuminated.

20. A system for **photodynamically diagnosing or treating a patient**, comprising:

an illuminator comprising five panels connected by hinged structures on inner side surfaces of adjacent panels, wherein the illuminator is configured to output light at a variable irradiance density during treatment; and

light sources disposed on surfaces of the five panels, the illuminator being configured to *uniformly illuminate a treatment surface* of the patient via the light sources;

one of the five panels being positioned as a center panel configured to face the treatment surface, and two or more of the five panels being configured to be angled relative to the center panel;

wherein the five panels are positioned to allow treatment **within approximately four inches of the treatment surface**, and

wherein each of the five panels has two first edges and two second edges shorter than the two first edges, and the light sources are arranged such that **a higher intensity of light is emitted proximate the second edges compared to the intensity of light emitted not proximate the second edges**.

21. A system for **photodynamically diagnosing or treating a patient**, comprising:

an illuminator comprising five panels connected by hinged structures on inner side surfaces of adjacent panels, and

light sources disposed on surfaces of the five panels, the illuminator being configured to *uniformly illuminate a treatment surface* of the patient via the light sources;

one of the five panels being positioned as a center panel configured to face the treatment surface, and two or more of the five panels being configured to be angled relative to the center panel;

wherein the five panels are positioned to allow treatment **within approximately four inches of the treatment surface**, and

wherein **the five panels are individually configurable to control illumination from each of the five panels**, and

wherein each of the five panels has two first edges and two second edges shorter than the two first edges, and the light sources are arranged such that **a higher intensity of light is emitted proximate the second edges compared to the intensity of light emitted not proximate the second edges**.

V. LEVEL OF ORDINARY SKILL IN THE ART

Sun Pharma proposes that a person of ordinary skill in the art for the Asserted Patents "would have a M.D. and/or a Ph.D. in an electrical engineering, optoelectronics, physics, optical sciences, optical engineering, or related scientific or engineering field, and at least one to two years of work or research experience in optical engineering, optics, optoelectronics, phototherapy, photodynamic therapy, or a related field." CMIB at 8.

Biofrontera asserts that one of skill "would have been an individual or member of a multi-disciplinary team with education of (1) at least a Bachelor of Science degree in one or more fields of electrical engineering, physics, biomedical engineering, computer engineering, chemical engineering or material science, in fields relating to optics, optoelectronics, radiometry, photometry, photodynamic diagnosis (PD), photodynamic therapy (PDT), phototherapy (PT), and related technologies; and (2) a medical degree in fields relating to the diagnosis of treatment of skill conditions and related disease states." RMIB at 4. Biofrontera further asserts: "Alternatively, a [person of ordinary a skill ("POSA")] individually or members of the multi-disciplinary team would have had at least four years of experience in one or more fields of optics, optoelectronics, radiometry, photometry, photodynamic diagnosis (PD), photodynamic therapy (PDT), or phototherapy (PT), and at least four years of experience in one or more fields of medical treatment of skin conditions and related disease states." *Id.*

"Factors that may be considered in determining level of ordinary skill in the art include: (1) the educational level of the inventor; (2) type of problems encountered in the art; (3) prior art

solutions to those problems; (4) rapidity with which innovations are made; (5) sophistication of the technology; and (6) educational level of active workers in the field." *Daiichi Sankyo Co., Ltd. v. Apotex, Inc.*, 501 F.3d 1254, 1256 (Fed. Cir. 2007) (internal quotations and citations omitted). Here, the parties discuss the first, second, and sixth factors. I find that these factors weigh against a finding that one of skill must have either an M.D. or four years of experience in the medical treatment of skin conditions or related disease states.

As to the first factor, none of the inventors have either an M.D. or four years of medical experience. CMIB at 9. Thus, this factor weighs against incorporating such a requirement into the level of skill. *See, e.g.*, *Philips*, 415 F.3d at 1313 (referring to "the well-settled understanding that inventors are typically persons skilled in the field of the invention"); *see also Daiichi*, 501 F.3d at 1257 (noting that "[t]he inventors of the '741 patent were specialists in drug and ear treatments – not general practitioners and pediatricians" and finding that this factor supported the conclusion that the district court erred in requiring an M.D. or medical experience for one of skill).

With respect to the second factor, Biofrontera has not established that the types of problems encountered in the art support a finding that an M.D. or experience in medical treatment is required. Biofrontera notes that "[t]he method of treatment claims include the limitation 'administering 5-aminilevulinic acid (ALA) to the patient" and asserts that "the claims are directed to systems and methods of treatment using a pharmaceutical compound in combination with a medical device, which the FDA refers to as a combination product." RMRB at 1-2. The fact that the invention relates to the treatment of patients is not alone sufficient to establish that either an M.D. or medical experience is required. In *Daiichi*, the patent was "drawn to a method for treating bacterial ear infections by topically administering the antibiotic ofloxacin into the ear." 501 F.3d at 1255. Despite this, the Federal Circuit found that the district court erred in defining one of skill as being

a pediatrician or general practitioner. *Id.* at 1257. The court noted that "the problem the invention of the '741 patent was trying to solve was to create a topical antibiotic compound to treat ear infections (otopathy) that did not have damage to the ear as a side effect." *Id.* The court explained that "while a general practitioner or pediatrician could (and would) prescribe the invention of the '741 patent to treat ear infections, he would not have the training or knowledge to develop the claimed compound absent some specialty training such as that possessed by the '741 patent's inventors." *Id.* Thus, the Federal Court defined one of skill in a manner that did not require an M.D. or experience treating patients. *Id.*

Here, the Asserted Patents address a problem in optical engineering of biomechanical instruments. *See* '512 Patent[4] at 2:5-49; *id.* at 2:39-42 ("The optical dead space that can occur at or near the hinges of conventional adjustable illuminators reduces the uniformity of the light along the treatment area, thereby reducing the effectiveness of PDT for these specific treatments"). The patent explains that it solves this problem through a design in which "a uniform light may be delivered to a targeted treatment area regardless of the shape and location of the contoured surface of the patient's body." *Id.* at 2:59-62; *see also id.* at 2:50-3:19. Biofrontera has not demonstrated why one of skill would need to have an M.D. or medical experience to solve such a problem. Further, under Biofrontera's definition, one of skill could have a Bachelor of Science and an M.D., but no relevant work or research experience and still qualify as a person of ordinary skill in the art. It is unclear if such a person would have the experience necessary to design the invention. *See Daiichi*, 501 F.3d at 1257.

Finally, I do not find that the sixth factor weighs in favor of imposing a requirement for an M.D. or medical experience. Biofrontera asserts that its proposal "better aligns" with the factor

[4] The Asserted Patents share a specification. *See* CMIB at 4.

"the educational level of active workers in the field" and asserts that such workers would have "medical *and* engineering degrees." RMIB at 5. Biofrontera does not, however, cite to any evidence in support of this statement.

Accordingly, I find that a person of ordinary skill in the art would have a M.D. and/or a Ph.D. in an electrical engineering, optoelectronics, physics, optical sciences, optical engineering, or related scientific or engineering field, and at least one to two years of work or research experience in optical engineering, optics, optoelectronics, phototherapy, photodynamic therapy, or a related field.[5]

VI. CLAIM CONSTRUCTION

A. Construction of Agreed-Upon Claim Terms

The parties have agreed to the following constructions:

CLAIM TERM	RELEVANT CLAIMS	PARTIES' AGREED CONSTRUCTION
"uniformly illuminate a treatment surface"	'028 patent: claims 1, 16, 20, 21 '512 patent: claims 1, 2, 20	"irradiating light over the active emitting area such that the measured irradiance at a treatment surface of the patient is at least within 60% of the measured maximum"
"uniformly illuminating a treatment surface"	'028 patent: claim 5 '512 patent: claim 8	"irradiating light over the active emitting area such that the measured irradiance at a treatment surface of the patent is at least within 60% of the measured maximum"

Joint Submission 1. I hereby adopt the parties' proposed constructions and shall construe the terms set forth above according to their agreed-to definitions.

[5] During the *Markman* hearing, Biofrontera's counsel suggested that a person under this definition would lack the experience necessary to develop the invention. Tr. at 31:19-25. Biofrontera suggests, for example, that this proposal would cover someone with "at least two years of experience providing phototherapy or photodynamic therapy in a dermatologist's office" or "a resident physician at a hospital." To alleviate any such concern, I find that experience in treating patients is not alone sufficient to meet this proposal.

B. Construction of the Disputed Claim Terms

1. "a higher intensity of light is emitted proximate the second edges compared to the intensity of light emitted not proximate the second edges"

The term "a higher intensity of light is emitted proximate the second edges compared to the intensity of light emitted not proximate the second edges" appears in every asserted independent claim, *i.e.*, claims 1, 8, and 20 of the '512 patent and claims 1, 5, 16, 20, and 21 of the '028 patent. The parties disagree on the claim construction of this term and have proposed the following constructions:

SUN PHARMA	BIOFRONTERA
"a higher intensity of light is emitted close to the second shorter edges compared to the intensity of light emitted not close to the second shorter edges"	Indefinite

JC at 2.

Biofrontera argues that this term "fails to reasonably inform a POSA attempting to ascertain whether a particular device infringes as to (1) what part or portion of the panel should be 'compared' (*i.e.*, how to distinguish 'proximate' parts of the panel from 'not proximate' parts of the panel); (2) what parameter should be measured; and (3) how that parameter should be measured." RMIB at 5.

Sun Pharma argues that its construction "reflects the meaning of [the] term in view of the specification's teachings, as understood by a POSITA." CMIB at 10. It disagrees that the term is indefinite on any of the three grounds articulated by Biofrontera. *Id.* at 13-18.

I find that Biofrontera has not established, by clear and convincing evidence, that this term is indefinite. Each of Biofrontera's three arguments is addressed below.

a) Scope of Proximate

First, Biofrontera argues that "[t]he proximate light limitation does not delineate what part(s) or portion of the claimed panels a POSA should 'compare' in order to determine if a device emits a higher intensity of light 'proximate the second edges' as compared to 'not proximate the second edges.'" RMIB at 6.

The Federal Circuit has repeatedly found that terms of degree are not inherently indefinite. *See, e.g., Mentor Graphics Corp. v. EVE-USA, Inc.*, 851 F.3d 1275, 1290 (Fed. Cir. 2017) ("Claims reciting terms of degree 'ha[ve] long been found definite' if they provide reasonable certainty to a skilled artisan when read in the context of the patent") (internal citation omitted). The court has also not required that a patent explicitly define boundaries when using terms such as "proximate." *See, e.g.*, *Invitrogen Corp. v. Biocrest Mfg., L.P.*, 424 F.3d 1374, 1384 (Fed. Cir. 2005) ("[A] patentee need not define his invention with mathematical precision in order to comply with the definiteness requirement"). As the Supreme Court recognized in *Nautilus*, language has "inherent limitations" and "absolute precision" in claim language is "unattainable." 572 U.S. at 909, 910. Instead, the Federal Circuit has explained that "[c]laim language employing terms of degree has long been found definite where it provided enough certainty to one of skill in the art when read in the context of the invention." *Interval Licensing LLC v. AOL, Inc.*, 766 F.3d 1364, 1370 (Fed. Cir. 2014).

I find that the intrinsic evidence provides certainty to one of skill in the art regarding the scope of the word "proximate." First, when the claims use the term "proximate," they do so with respect to a reference point. Specifically, the claims state that the intensity of light "proximate the second edges" is compared to the intensity of light "not proximate the second edges." *See, e.g.*, '028 patent at cl. 1. A person of ordinary skill in the art would use the fixed reference points to determine what is proximate and what is not proximate. *See, e.g.*, CMIB Ex. D at ¶ 37.

Additionally, the specification provides information to understand the meaning of "proximate." The patents include "[a]n example in which the LED arrays 60 may be individually configured is shown in FIG. 5." '512 patent at 6:21-22.

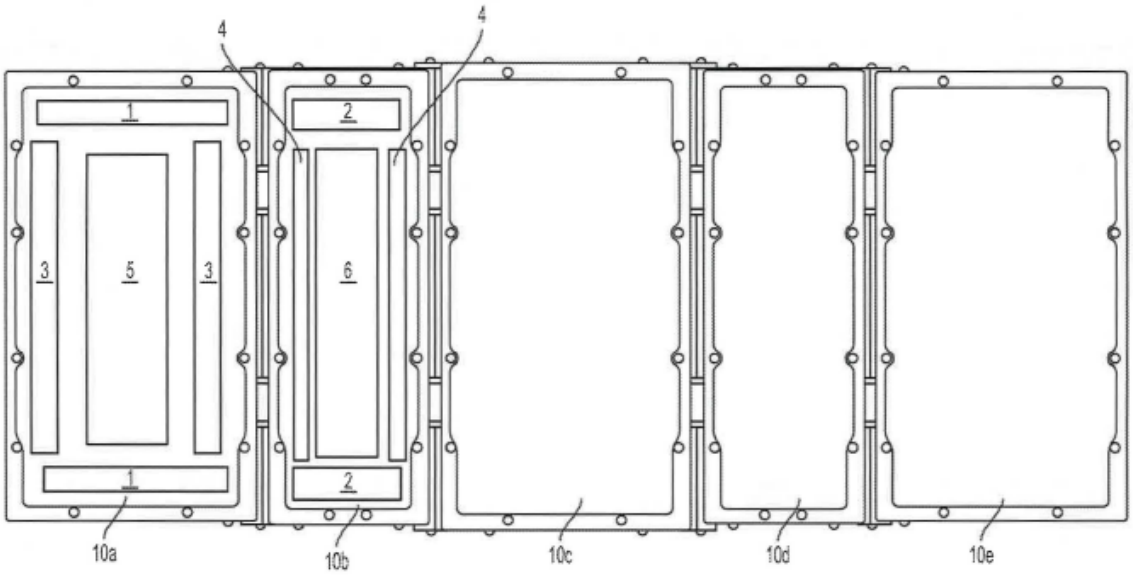

FIG. 5

In describing Figure 5, the patent states:

> Here, the LED arrays 60 are divided into three general areas, which may be described as "addressable strings." Areas 1, 3, and 5 correspond to an addressable string configuration that may be included in the wider panels 10*a*, 10*c*, and 10*e*, while areas 2, 4, and 6 correspond to an addressable string configuration that may be included in the narrower panels 10*b* and 10*d*. The current to each area is adjusted in order to adjust the intensity of light emitting from each of the areas. For example, a higher current may be supplied to areas 1 and 2 than the current supplied to areas 3 and 4 such that areas 1 and 2 emit a higher intensity of light than areas 3 and 4. Similarly, a higher current may be supplied to areas 3 and 4 than the current supplied to areas 5 and 6. Thus, a higher intensity of light is emitted overall from the edges, which may allow for a reduction in any fall-off effect.

Id. at 6:23-38. Thus, this example shows that, at least in this embodiment, one of skill can divide the panels into areas and determine whether the areas closer to the shorter edges emit a higher intensity of light as compared to the other edges.

Biofrontera disagrees that this disclosure provides "objective guidance" and instead states that "the specification fails to comment on the 'proximity' of the areas depicted [in Figure 5]." RMIB at 7. It also argues that a person of ordinary skill in the art would not, for example, know if the entirety of areas 1 and 2 of Figure 5 are considered "proximate" to the shorter edges or if only portions of these areas are proximate *Id*. A person of ordinary skill is not, however, left without any guidance as to how to determine the scope. When addressing the scope, one of skill would look to not only the intrinsic evidence but the context of the particular scenario he is addressing. As Sun Pharma notes, in the particular example of Figure 5, one of skill would understand that "the entire purpose of Figure 5 and the accompanying disclosure is to demonstrate that dividing the panel into areas of different current or density of light sources results in a higher intensity of light emitted close to the shorter edges." CMRB at 4. Thus, "[n]o POSITA would assume . . . that only a portion of the area 1 is 'proximate.'" *Id.*

I also note that the Federal Circuit has not required that patents using terms of degree such as "proximate" explicitly define their boundaries. In almost every usage of a term of degree, the question as to the precise boundary of scope could be raised. Yet, the Federal Circuit has not found that the use of such terms renders claims to be *per se* indefinite. *See Interval Licensing*, 766 F.3d at 1370 ("We do not understand the Supreme Court to have implied in *Nautilus*, and we do not hold today, that terms of degree are inherently indefinite."). Nor has Biofrontera cited to any case in which the Federal Circuit has found terms such as "proximate" or "near" to be indefinite for failing to explicitly define the boundaries.

I am also not persuaded by Biofrontera's arguments that this case is distinguishable because it requires a comparison of "proximate" and "not proximate" features. *See* RMRB at 4-5; *see also* Tr. at 53:20-21; *id.* at 58:19-23. Biofrontera does not cite to any case law to support its assertion

that "a higher level of precision is required because of the 'compared to' language." Tr. at 53:20-21. Nor do I find that claims requiring a comparison provide a reason to require more precision. In all case involving terms such as "proximate," "near," or "close," one of skill will need to determine the scope of the term to assess whether the limitation is met. If, for example, a claim term required that certain elements be located "proximate" to a structural feature, a person of skill would need to understand the metes and bounds of the term to assess whether the element is close enough to the structural feature to satisfy the claim language. The idea that the additional step of requiring a comparison requires more precision is a red herring. While it may be a distinguishing feature, it does not add additional uncertainties with respect to scope that would not be present in other patents using the word "proximate."

Finally, I note that the Commission has previously rejected a similar indefiniteness argument based on geographic location. In *Certain Electrical Connectors, Components Thereof, & Prods. Containing the Same* ("*Electrical Connectors*"), the claim language recited "the first holes are provided in end regions of the tine plate proximate to two opposite ends of the tine plate in the longitudinal direction, and the second holes are provided in a center region of the tine plates between the end regions." Inv. No. 337-TA-1043, Order No. 23 at 6 (Sept. 28, 2017). While the dispute did not center around the meaning of "proximate," it involved the same question presented here: Is a geographic claim term indefinite if the patent does not define the boundaries of the term? In the *Markman* order, the ALJ found that one of skill may not be able to discern the boundaries of "end region" and "center region." *Id.* at 12. The ALJ stated:

> For example, a company could create a tine plate with the second holes not centered directly in the middle of the tine plate but located closer towards the ends of the tine plate. In this case, it is possible that a person of ordinary skill in the art would understand that the second holes are in the end regions themselves and thus the tine plate does not infringe the patent. Another person of ordinary skill in the art might believe that the second holes are in the center and that the tine plate *does* infringe.

Id. The ALJ then noted that "[t]he record is mostly silent as to the boundaries of the regions." *Id.* While the patent included a figure depicting "ends," it "only show[ed] the delineation for that particular embodiment." *Id.* at 13. The ALJ also explained that the record included a declaration from one of skill that he was unable to determine the boundaries of the different regions. *Id.* The ALJ ultimately concluded that "the patent does not provide clear guidance on the boundaries of the regions," and thus found the terms "end regions," "proximate to two opposite ends," and "the second holes are provided in a center region of the tine plate between the end regions" indefinite. The Commission reversed this decision and set forth constructions for each term. *Electrical Connectors*, Reversal of Initial Determination and Remand of the Investigation (March 26, 2018). While the Commission did not specifically address the ALJ's conclusion that one of skill would be unable to determine the boundaries of the terms, in reversing the ALJ, the Commission disagreed that a patent need to explicitly provide boundaries of geographic terms.

For these reasons, I find that the term is not indefinite on this ground.

b) What Parameter Should be Measured

Biofrontera argues that "[n]either the claims nor the specification provide any explicit definition of 'intensity.'" RMIB at 10. According to Biofrontera, a person of ordinary skill in the art would normally understand that "'intensity' refers to a radiant flux density, which is a property representative of the light emitted from a light source, expressed in units of W/cm^2." *Id*. Biofrontera suggests, however, that, "in certain passages, the specification refers to 'intensity' as if it were a 'light dose,' or 'fluence' – *i.e.*, a property representative of light incident upon some *surface* placed some distance from the light source, expressed in units of J/cm^2." *Id.* at 11 (emphasis in original). Biofrontera argues that "this inconsistent usage leaves a POSA at sea in determining what 'intensity' the claim term refers to." *Id*.

The parties agree that "intensity" has a commonly understood meaning to a person of ordinary skill in the art. RMIB at 10 ("As normally understood by a POSA, 'intensity' refers to a radiant flux density, which is a property representative of the light emitted from a light source, expressed in units of *W/cm*^{2}"); CMRB at 5 ("[T]he normal meaning of 'intensity' is emitted irradiance from a light source, expressed in W/cm^2). Biofrontera has not shown that the patentee intended to redefine this term. While a patentee can serve as its own lexicographer and redefine the meaning of a term, there must be evidence of an intent to do so. *See, e.g., Thorner v. Sony Computer Entm't Am. LLC*, 669 F.3d 1362, 1365-66 (Fed. Cir. 2012) (explaining that, "[t]o act as its own lexicographer, a patentee must clearly set forth a definition of the disputed claim term" and "clearly express an intent to define the term"). Biofrontera's arguments that the patentee intended to redefine "intensity" do not meet this standard. For example, Biofrontera cites to a portion of the specification that states "in some embodiments, the illuminator is configured to irradiate the lesions with a uniform blue light (*e.g.*, 417 nm) at a low intensity (*e.g.*, about 0.1 J/cm^2 to about 2 J/cm^2)." '512 patent at 9:21-25. As Sun Pharma explains, however, when this portion of the specification is read in context, "it simply provides the light dose received at the end of a period of time, given a low intensity of light" (CMRB at 6):

> In certain embodiments, the illuminator irradiates the lesions with a uniform blue light for a first prescribed period and then irradiates the lesions with a uniform red light for a second prescribed period. For example, in some embodiments, the illuminator is configured to irradiate the lesions with uniform blue light (e.g., 417 m) at low intensity (e.g., about 0.1 J/cm^2 to about 2 J/cm^2).

Id. at 9:18-24. The patent then reiterates the relationship between light dose and irradiance:

> Since the total light dose (J/cm^2) is equal to irradiance (W/cm^2) multiplied by time (sec), the only additional parameter that needs to be controlled for delivery of the correct treatment light dose is exposure time.

Id. at 9:53-56. Thus, I do not agree with Biofrontera that the patentee set forth two different definitions of "intensity." At the very least, there is not clear evidence of an intent to redefine the

term. *See Thorner*, 669 F.3d at 1365 ("It is not enough for a patentee to simply disclose a single embodiment or use a word in the same manner in all embodiments, the patentee must clearly express an intent to redefine the term.") (internal quotations and citations omitted). Instead, I find that the plain and ordinary meaning of "intensity" applies. For these reasons, I find that the term is not indefinite on this ground.

c) Method of Measuring

Finally, Biofrontera argues that the claims "do not reasonably inform a POSA as to *how* [the parameter of the proximate light limitation] is to be measured." RMIB at 12. Biofrontera notes that the emission from a light source is measured by a sensor, but that the intensity "will change based on the position of the sensor – *i.e.*, its angle and how far away it is." *Id.* at 12-13. According to Biofrontera, "[b]ecause different measurement methods will produce different values for intensity even for the exact same device," the term is indefinite. *Id.* at 13.

The patent specification does not speak to the method for measuring intensity at different locations. The Federal Circuit has noted, however, that a patent need not specify a methodology if a person of ordinary skill in the art would already know what methodology to use. *See Ethicon Endo-Surgery, Inc. v. Covidien, Inc.*, 796 F.3d 1312, 1319 (Fed. Cir. 2015) (explaining that "[i]f such an understanding of how to measure the claimed average pressures was within the scope of knowledge possessed by one of ordinary skill in the art, there is no requirement for the specification to identify a particular measurement technique"); *Presidio Components, Inc. v. Am. Tech. Ceramics Corp.*, 875 F.3d 1369, 1376 (Fed. Cir. 2017) ("[I]f a skilled person would choose an established method of measurement, that may be sufficient to defeat a claim of indefiniteness, even if that method is not set forth *in haec verba* in the patent itself"). Here, Sun Pharma asserts that one of skill would understand how to measure the relevant intensity of light emitted proximate the second edges and the light emitted not proximate the second edges and offers several ways to

do so. First, Sun Pharma explains that "[a] higher intensity of light may be self-evident – *e.g.*, by visually inspecting that there is a higher density of LEDs in the areas proximate the second edges as compared to not proximate the second edges." CMIB at 17; *see also* CMIB Ex. D at ¶ 38. Second, Sun Pharma asserts that "the Asserted Patents describe using a controller to set the intensities of specific addressable strings or LED arrays." CMIB at 17 (citing '512 patent at 5:55-60). Finally, Sun Pharma's expert, Dr. Nan Jokerst, explains that "the POSITA would understand that the sensor would need to be placed in relatively the same position with respect to the areas to get a usable comparison." CMIB Ex. D at ¶ 39. As an example,

> [I]f a POSITA uses a sensor to measure the relative intensities of the areas the POSITA would understand that the sensor would need to be placed at the same distance with respect to the plane of emission (the surface of the emitters) to get a usable comparison. In other words, if the POSITA wanted to compare the intensity of light emitted from areas 1, 3, and 5 [of Figure 5], the POSITA would place the sensor at the same distance above the emitting surface.

Id. Thus, a person of ordinary skill in the art would understand how to measure and compare intensity.

Biofrontera asserts that one of skill's knowledge about using sensors is insufficient because "numerous questions still remain" about where the sensor is placed. RMIB at 14. Simply raising hypothetical questions, however, does not constitute clear and convincing evidence that a person of ordinary skill in the art would be unable to navigate these scenarios to measure and compare the intensity of light.[6] I therefore find that Biofrontera has not established that the term is indefinite on this ground.

[6] In its reply brief, Biofrontera argues that "[n]either Sun nor the intrinsic evidence explain whether the claim requires that the intensity of one proximate region, of both proximate regions, or some average of the two be higher than the intensity of the 'not proximate' region." RMRB at 6. While there certainly could be a hypothetical situation in which the intensity at one proximate region is

d) Construction

Having determined that the term is not indefinite, I must now construe the claim. Sun Pharma asserts that "second edges" should be construed as "second shorter edges" and that "proximate" means "close to." CMIB at 11. Biofrontera asserts that Sun Pharma's proposal simply "substitute[s] one term of degree for another." RMIB at 8.

I find that Sun Pharma's proposal is consistent with the claim language and the specification. The claim language provides, for example, "wherein each of the at least five panels had two first edges and two second edges shorter than the two first edges." '512 patent at cl. 1. Thus, the claim language makes it clear that the second edges must be shorter than the first edges.

I also find that construing "proximate" as "close to" is appropriate, as this is the plain and ordinary meaning. CMIB Ex. D at ¶ 34; *see also Boehringer Ingelheim Pharm. Inc. v. Lupin Atlantis Holdings SA,* Case No. 3:18-12663-BRM-TJB, 2020 WL 1888247, at *5 (D.N.J. Apr. 16, 2020) ("Courts have routinely ruled that the plain meaning of 'proximate to' is 'at or near'.").

Accordingly, in this Investigation, the term "a higher intensity of light is emitted proximate the second edges compared to the intensity of light emitted not proximate the second edges" will be construed as "a higher intensity of light is emitted close to the second shorter edges compared to the intensity of light emitted not close to the second shorter edges."

2. "photodynamically diagnosing or treating a patient"

The term "photodynamically diagnosing or treating a patient" appears in every asserted independent claim, *i.e.*, claims 1, 8, and 20 of the '512 patent and claims 1, 5, 16, 20, and 21 of

different than the intensity of another proximate region, there is not sufficient evidence to establish that a person of ordinary skill in the art could not determine if the claim is met. For example, in such a scenario, it is unclear if there would be uniform illumination, as required by the claims. Based on what Biofrontera has presented, I am not persuaded that the claim is indefinite on this ground.

the '028 patent. The parties disagree on the claim construction of this term and have proposed the following constructions:

SUN PHARMA	BIOFRONTERA
Preamble not limiting	Preamble is limiting, plain and ordinary meaning

JC at 2.

Sun Pharma argues that "[t]he preambles of the Asserted Patents are not limiting because the claim elements themselves describe complete inventions, whereas the preamble only describes the claims' intended purpose of use." CMIB at 19. Sun Pharma contends that the preamble "neither includes any essential structure or steps, nor breathes 'life, meaning or vitality to the claim." *Id.* at 20 (internal citation omitted). Nor does the preamble "supply any antecedent basis for the terms in the body of the claims." *Id.*

Biofrontera asserts that "the preamble to all of the Asserted Claims is limiting because it establishes necessary antecedent basis for the body of the claims." RMIB at 15. Biofrontera explains that the preamble recites "a patient," and "[t]here is no other recitation of 'a patient' anywhere in the body of the claim." *Id.* Biofrontera also asserts that "the Federal Circuit has routinely concluded that statements of intended purpose in methods of using apparatuses or compositions has tended to result in a conclusion that such preamble language is limiting." *Id.* at 16. Finally, during the *Markman* hearing, Biofrontera noted that the word "treating" "appears repeatedly both in the preamble . . . and in the body of the claim" and thus it is appropriate to consider the phrase "photodynamically diagnosing or treating" to also be limiting. Tr. at 70:12-14.

The Federal Circuit has explained that "as a general rule preamble language is not treated as limiting." *Arctic Cat Inc. v. GEP Power Prods., Inc.*, 919 F.3d 1320, 1327 (Fed. Cir. 2019). The Federal Circuit has found a preamble to be limiting when the preamble "recites essential structure

or steps, or if it is necessary to give life, meaning, and vitality to the claim." *Id.* It has also found a preamble to be limiting "to the extent it is 'necessary to provide antecedent basis for the body of the claim." *Cochlear Bone Anchored Solutions AB v. Oticon Med. AB*, 958 F.3d 1348, 1355 (Fed. Cir. 2020). The court has found a preamble to not be limiting, however, "where a patentee defines a structurally complete invention in the claim body and uses the preamble only to state a purpose or intended use for the invention." *Arctic Cat*, 919 F.3d at 1328.

Biofrontera makes two arguments for why the preamble should be construed as limiting. First, it argues that the preamble provides antecedent basis. RMIB at 15. Second, it argues "the asserted method claims recite the intentional purpose for which the method must be performed, and the preamble of these claims is therefore limiting." *Id.* at 16. With respect to this second argument, Biofrontera cites to the Federal Circuit's opinion in *Eli Lilly & Co. v. Teva Pharms. Int'l GmbH*, 8 F.4th 1331, 1341 (Fed. Cir. 2021). *Id.* In *Eli Lilly*, the Federal Circuit drew a distinction between preambles of method claims and preambles of apparatus and composition claims. The court noted "the well-established principle that '[a]pparatus claims cover what a device *is*, not what a device *does*." *Id.* at 1340 (emphasis in original) (internal citation omitted). The court explained: "With regard to claims directed to apparatuses or compositions, we have often relied on the proposition that '[p]reamble language that merely states the purpose or intended use of an invention is generally not treated as limiting the scope of the claim.'" *Id.* at 1340-1341. Method claims, however, "are not directed to what the method 'is,' but rather they typically rely entirely on what the method 'does.'" *Id.* at 1341. The court stated that "what a method does is usually recited in its preamble." *Id.* Thus, "our claim construction analysis of statements of intended purpose in methods of using apparatuses or compositions has tended to result in a conclusion that such preamble language is limiting." *Id.*

As in *Eli Lilly*, the preamble for the method claims here are "statements of the intentional purpose for which the methods must be performed." 8 F.4th at 1342. Both method claims describe a method that involves administering ALA to a patient, positioning an illuminator proximate to the patient and then illuminating a treatment surface of the patient. '512 patent at cl. 8; '028 patent at cl. 5. The *raison d'etre* of the claimed method is to photodynamically diagnose or treat the patient. *See Eli Lilly*, 8 F.4th at 1341 (explaining that a preamble is limiting if the terms used "are not merely circumstances in which the method may be useful, but instead are the *raison d'etre* of the claimed method itself") (internal quotations and citations omitted). The preamble is "not merely a context in which the invention may be used, but [is] the essence of the invention without which performance of the recited steps is nothing but an academic exercise." *Id.* (internal quotations and citations omitted).

Here, the specification further demonstrates that photodynamically diagnosing and treating patients is central to the invention. The Background section begins by noting that "[p]hotodynamic therapy (PDT), photodynamic diagnosis (PD), or photochemotherapy is generally used to treat and/or diagnose several types of ailments in or near the skin or other tissues, such as those in a body cavity." '512 patent at 1:24-27. In the Summary, the specification explains that conventional adjustable illuminators could have "optical 'dead spaces' in certain portions of the target treatment area," which would "receive less overall light, resulting in a lower dose of treatment in those portions." *Id.* at 2:5-20. As Sun Pharma recognizes, "[t]he systems and methods claimed in the '512 and '028 Patents include novel features 'to reduce or eliminate these dead spaces and provide for a more uniform light distribution in an adjustable illuminator designed for PDT or PD of a variety of targeted areas." CMIB at 7 (quoting '512 patent at 2:50-54). The method claims themselves reference treatment, thus confirming that the entire purpose of the method claims is to

treat (or diagnose) a patient. *See* '512 patent at cl. 8 ("uniformly illuminating a treatment surface of the patient with light sources disposed on the at least five panels of the illuminator"); '028 patent at cl. 5 ("uniformly illuminating a treatment surface of the patient with light sources disposed on the five panels of the illuminator, the five panels being positioned to allow treatment within approximately four inches of the treatment surface"). For these reasons, I find that the preamble of the method claims (claim 8 of the '512 and claim 5 of the '028 patent) are limiting.

With respect to the system claims, I turn to Biofrontera's first argument regarding antecedent basis. The preambles of each of the independent claims (both system and method) include the phrase "a patient," while the body of each of the claims goes on to recite "the patient." '512 patent at cl. 8; '028 patent at cl. 5. Sun Pharma acknowledges this, but asserts that I need not construe the entire preamble as limiting. CMRB at 8. In support of their respective arguments, both parties discuss several Federal Circuit cases: (1) *TomTom, Inc. v. Adolph*, 790 F.3d 1315 (Fed. Cir. 2015); (2) *Cochlear Bone*; and (3) *Bio-Rad Laboratories, Inc. v. 10X Genomics Inc.*, 967 F.3d 1353 (Fed. Cir. 2020).

In *TomTom*, the preamble recited "[a] method for generating and updating data for use in a destination tracking system of at least one mobile unit comprising." 790 F.3d at 1318. The Federal Circuit noted that "[t]he district court correctly concluded . . the phrase 'destination tracking system of at least one mobile unit' is limiting," but found that "the court erred in determining that it had to construe the entire preamble if it construed a portion of it." *Id.* at 1323. The court explained that the fact that the phrase provided a necessary structure for claim 1 "does not necessarily convert the entire preamble into a limitation, particularly one that only states the intended use of the invention." *Id*.

In *Cochlear Bone*, the parties disputed whether the phrase "for rehabilitation of unilateral hearing loss" was limiting. 958 F.3d at 1354. The full preamble at issue, however, recited "[a] bone-conducting, bone-anchored hearing aid apparatus for sound transmission from one side of a patient's head to the patient's cochlea on another side of the patient's head for rehabilitation of unilateral hearing loss." *Id.* at 1351. The Federal Circuit explained that "[a]lthough the preamble term 'a patient' may provide antecedent basis for claim 1's later recitation of 'the patient,' that is not the preamble language Cochlear argues is limiting." *Id.* at 1355. The court then noted: "A conclusion that some preamble language is limiting does not imply that other preamble language, or the entire preamble, is limiting." *Id.* As such, the court concluded that the preamble "for rehabilitation of unilateral hearing loss" was not limiting. *Id.*

Finally, in *Bio-Rad Labs*, the preamble recited "[a] method for conducting a reaction in plugs in a microfluidic system, comprising the steps of…" 967 F.3d at 1370. The district court found that the preamble provided antecedent basis for the terms "microfluidic system" and "reaction," but declined to consider the entire preamble to be limiting, citing *TomTom*. *Id.* The Federal Circuit found that the district court erred. *Id.* at 1371. It noted: "Crucially, unlike *TomTom*, the preamble in this case cannot be neatly packaged into two separate portions." *Id.* The court further explained: "We are also disinclined to sanction finding a preamble 'partially' limiting by splicing it as the district court did here." *Id.* Rather, "[t]he fact that the terms 'reaction' and 'microfluidic systems' provide antecedent basis for these terms in the body of the claim is a strong indication that the preamble acts 'as a necessary component of the claimed invention.'" *Id.*

As with *Bio-Rad*, there is not a way to sever the preamble such that one part could be consider limiting ("a patient"), while the other part would not ("photodynamically diagnosing or

treating"). Because the preamble "cannot be neatly packaged into two separate portions," I decline to do so. As such, I find the entire preamble limiting.

The decision that the preamble should not be severed is further supported by the intrinsic evidence. The preamble is not the only place in the claim that references treatment. As noted above, the independent claims each later refer to a "treatment surface." By using these words, the claims specify that the system is used for treating (or diagnosing) a patient. Additionally, certain claims of the '028 patent explicitly indicate that the system is used for treating conditions. *See, e.g.*, '028 patent at cls. 1, 20 ("wherein the five panels are positioned <u>to allow treatment</u> within approximately four inches of the treatment surface"); *id.* at cl. 20 ("wherein the illuminator is configured to output light at a variable irradiance density <u>during treatment</u>"). Thus, this is not a case in which the intention is only expressed in the preamble itself, but it is instead woven throughout the claims. Accordingly, I find that the circumstances here indicate that each of the preambles is limiting.[7]

Accordingly, in this Investigation the preamble "photodynamically diagnosing or treating a patient" will be construed as limiting.

3. "nested hinges"

The term "nested hinges" appears in every asserted independent claim of the '512 patent, *i.e.*, claims 1, 8, 17, and 20. The parties disagree on the claim construction of this term and have proposed the following constructions:

[7] At the conclusion of the arguments on this term, Sun Pharma's counsel noted that "there is no evidence that photodynamically diagnosing is part of the structure of the invention. It doesn't show up elsewhere in the claims." Tr. at 83:3-5. Sun Pharma did not address this argument in its briefs. Nor did it cite to any legal argument for why I would be permitted to sever the phrase "or diagnosing" from the preamble, in light of the decision in *Bio-Rad*. Thus, I decline to sever the preamble in this manner.

SUN PHARMA	BIOFRONTERA
Plain and ordinary meaning. Hinges that fit on inner side surfaces of adjacent panels.	Indefinite

JC at 2.

Biofrontera argues that "[a] POSA does not have reasonable certainty based on the intrinsic and extrinsic evidence to distinguish a 'nested hinge' from any other kind of hinge or the 'hinged structure' claimed in the '028 Patent and thus, all Asserted Claims of the '512 patent are indefinite." RMIB at 17. Biofrontera explains that "[n]ested hinges' has no understood meaning or definition in the art" and that "the intrinsic evidence provides no guidance regarding the meaning of the term." *Id.* It further explains that "[a] 'nested hinge' must mean something different than a 'hinged structure' if the claims [of the '512 and '028 patents] are to be read consistently with each other." *Id.* at 19. Biofrontera argues that Sun Pharma has failed to show how the two terms are different. *Id.*

Sun Pharma argues that the claims and specification "support the plain and ordinary meaning of 'nested hinges on inner side surfaces of adjacent panels' as 'hinges that fit on inner side surfaces of adjacent panels.'" CMIB at 21. Sun Pharma also argues that "the understanding of 'nested hinges on inner side surfaces of adjacent panels" is supported by the interaction of the Examiner and Applicant." *Id.* at 23.

I find that Biofrontera has not shown, by clear and convincing evidence, that the patent's "claims, read in light of the specification delineating the patent, and the prosecution history, fail to inform with reasonable certainty, those skilled in the art about the scope of the invention." *Nautilus*, 572 U.S. at 901. Instead, I find that there is redundancy between the claim phrases

"nested" and "on inner side surfaces of adjacent panels." As explained below, however, this redundancy does not prevent one of ordinary skill from understanding the scope of the invention.

I first note that neither party introduces evidence that "nested hinges" is a term that has a plain meaning to either laypersons or a person of ordinary skill in the art. *See* RMIB at 17 ("'Nested hinges' has no understood meaning or definition in the art."). The word "nested" does, however, have a plain and ordinary meaning *i.e.* "to fit compactly together or within one another." CMRB at 9; RMIB Ex. 3 at ¶ 83. The intrinsic record supports the application of this understanding to the term "nested hinges" such that one of skill would understand "nested hinges" as hinges that fit compactly together, *i.e.*, hinges that fit on inner side surfaces of adjacent panels.

The intrinsic record associates "nested hinges" with the phrase "on inner side surfaces of adjacent panels." First, the claims explicitly recite that "nested hinges" must be on "on inner side surfaces of adjacent panels." *See, e.g.* '512 patent at cl. 1. By separately including the phrase "on inner side surfaces of adjacent panels," the claims imply that this requirement is different from "nested." *See Digital-Vending Services Int'l, LLC v. Univ. of Phoenix, Inc.*, 672 F.3d 1270, 1275 (Fed. Cir. 2012) (quoting *Bicon, Inc. v. Straumann Co.*, 441 F.3d 945, 950 (Fed. Cir. 2006)) (noting that "well-established rule that 'claims are interpreted with an eye toward giving effect to all terms in the claim'"). This is not conclusive evidence, however, that "nested" <u>must</u> mean something different than "on inner side surfaces of adjacent panels." As the Federal Circuit has stated, "a construction that introduces redundancy into a claim is disfavored, [but] it is not foreclosed . . . particularly . . . where . . . intrinsic evidence makes it clear that the 'redundant' construction is correct." *VLSI Tech. LLC v. Intel Corp.*, 53 F.4th 646, 653 (Fed. Cir. 2022).

Here, the intrinsic evidence establishes that the redundant construction is correct. First, the specification explains that "[t]he hinges 50 may take the form of nested hinges, which may include

hinges that substantially reduce or eliminate optical dead spaces." '512 patent at 4:46-48. The specification further explains that fitting hinges within the inner side surface of adjacent panels allows for "the outside vertical edges of adjoining panels to be positioned closer to one another." *Id.* at 4:63-5:10.

The specification also states that "FIGS. 3A-3B show detailed views of the nested hinges of the main body of the illuminator of FIGS. 1A-1B." *Id.* at 3:31-32.

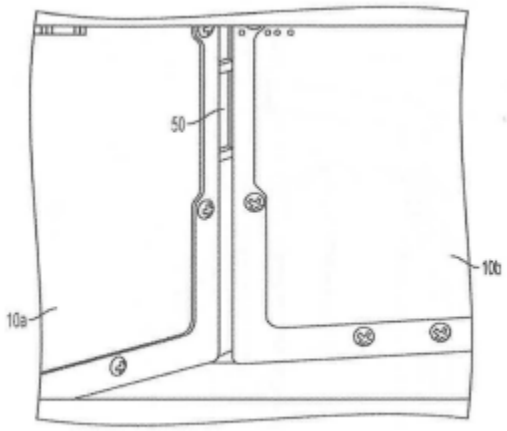

FIG. 3A

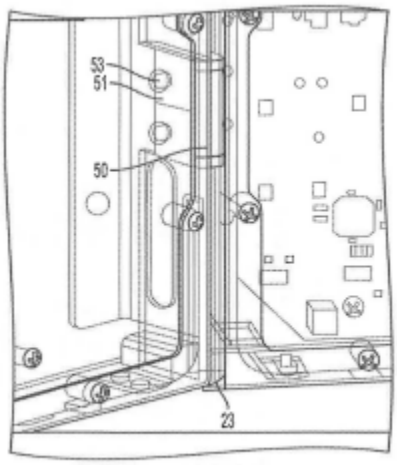

FIG. 3B

Id. at Fig. 3A, 3B. As can be seen in these figures, the nested hingers fit on the inner side surfaces of the adjacent panels. Thus, the patent figures support an understanding that "nested hinges" are hinges that hinges that fit on inner side surfaces of adjacent panels.

Next, the specification provides:

> As shown in further detail in FIGS. 3A-3B, between the tabs 23 are the nested hinges 50, which are mounted to the inner side surfaces of adjacent panels (e.g., 10*a*, 10*b*) to allow for rotation of the panels. A flange 51 of the hinge 50 is mounted to the inner side surface of a panel via bolts 53. The inner side surface of a panel may include a recess in which the flange 51 may be placed. The inner side surface of the panel may also include an additional recess to accommodate the joint of the hinge 50 such that the joint of the hinge 50 becomes substantially flush with an outer front surface of the panel. Such configurations may allow for the outside vertical edges of adjoining panels to be positioned closer to one another. By spacing the vertical edges of adjoining panels closer, optical dead spaces may be further

> reduced or eliminated. In addition, the hinges 50 together with the tabs 23 may reduce the number of pinch points present in the system.

Id. at 4:63-5:12. Thus, this portion of the specification reveals that nested hinges can have a flange which is "mounted to the inner side surface of a panel via bolts 53" and which may be placed in a recess on the inner side surface of a panel. This information suggests that "nested hinges" are at least a hinge type that may be accommodated by a recess.

This excerpt also indicates that the joint of the nested hinge may "become substantially flush with an outer front surface of the panel" via a recess to accommodate the joint. This embodiment appears in claims 6 and 7, which specifically claim systems in which the joint is "positioned substantially flush with an outer front surface of one panel of the at least five panels" (claim 6) or which "compris[es] a recess at an inner side surface of a panel configured to accommodate a hinge joint" (claim 7). *Id.* at cls. 6 and 7. Because this limitation is separately articulated in dependent claims, it is presumed that it is not a limitation found in the independent claims. *See Interdigital Communications LLC v. International Trade Commission*, 690 F.3d 1318, 1324 (Fed. Cir. 2012). However, "the presumption of differentiation in claim scope is not a hard and fast rule. [I]ndeed, any presumption created by the doctrine of claim differentiation will be overcome by a contrary construction dictated by the written description or prosecution history." *Littelfuse, Inc. v. Mersen USA EP Corp.*, 29 F.4th 1376, 1380 (Fed. Cir. 2022) (internal citations and quotations omitted). Additionally, although Sun Pharma represents that the portions of the specification that discuss the recess features "are not meant (nor are necessary) to provide a POSITA with an understanding of the plain and ordinary meaning of the term 'nested hinges on inner side surfaces of adjacent panels," CMIB at 25, that disclosure is consistent with Sun Pharma's proposed construction.

Sun Pharma asserts that the prosecution history also supports its construction. CMIB at 23-24. Claim 1 originally recited the limitation "nested hinges configured to reduce optical dead space." CMIB Ex. E at Sun-ITC-0147732. The Examiner rejected this claim as indefinite, although the focus of the Examiner's concern was with respect to the meaning of "reduc[ing] optical dead space." *Id.* ("The metes and bounds of the claim are unclear as it is not known what the optical dead space is compared to in order to known [sic] that it has been reduced"). In response to the Examiner's rejection, the applicant amended the claims to recite the limitation "nested hinges on inner side surfaces of adjacent panels." *Id.* at Sun-ITC-0148818, 8823. This history can be read either to confirm the understanding that "on inner side surfaces of adjacent panels" is a separate requirement from "nested hinges" or that the limitation to "on inner side surfaces of adjacent panels" is redundant, but was added to satisfy an Examiner requirement for clarity. It therefore does not clearly support either party's position. I also note that, contrary to Sun Pharma's argument, this history only pertains to the definiteness of "on inner side surfaces of adjacent panels" and not the term "nested hinges."

Accordingly, for these reasons I find that the intrinsic evidence demonstrates that the terms "nested" and "on inner side surfaces of adjacent panels" are redundant. Biofrontera, in contrast, has not demonstrated that such an understanding is incorrect. Instead, Biofrontera relies on a claim differentiation argument in support of its view that "nested" must mean something different than "hinges that fit on inner side surfaces of adjacent panels." Biofrontera explains that the '028 patent recites "hinged structures on inner side surfaces of adjacent panels." RMIB at 18. According to Biofrontera, the '028 patent demonstrates that "[a] 'nested hinge' must mean something different than a 'hinged structure' if the claims are to be read consistently with each other." *Id.* at 19. I do not find that this claim differentiation argument constitutes clear and convincing evidence of

Biofrontera's position. Even assuming that claim differentiation applies here, as noted above "the presumption of differentiation in claim scope is not a hard and fast rule." *Littelfuse*, 29 F.4th at 1380. I have already found that the intrinsic evidence demonstrates that there is redundancy between "nested" and "on inner side surfaces of adjacent panels." It is thus not problematic that one patent uses the term "nested hinges," while the other patent recites "hinged structures." Rather, this difference demonstrates that the '512 patent includes redundant language, while the '028 patent does not.

Accordingly, I do not find that "nested hinges" is indefinite. In this Investigation, the term "nested hinges on inner side surfaces of adjacent panels" will be construed as "hinges that fit on inner side surfaces of adjacent panels."

4. "the five panels are individually configurable to control illumination from each of the five panels"

The terms "the five panels are individually configurable to control illumination from each of the five panels" appears in claims 16 and 21 of the '028 patent. The parties disagree on the claim construction of this term and have proposed the following constructions:

SUN PHARMA	BIOFRONTERA
Plain and ordinary meaning. The power output and/or light intensity of each panel can be individually controlled.	Indefinite

JC at 3.

Biofrontera argues that "[t]he specification of the '028 Patent repeatedly uses the words 'configure,' 'configured,' 'configurable,' and other variations, but uses these terms in a manner where it is not clear whether the claimed term 'individually configurable' relates to the physical manipulation of the panels to control illumination (*e.g.*, by angling the panels relative to each other), or to the altering of the wavelength and/or current of the individual LED diodes." RMIB at

27. Biofrontera states that the "specification repeatedly references configuring the panels in a manner that suggests the 'configuring' is directed to physical manipulation of the panels." *Id.* It further states that the patent, however, "also repeatedly suggests that the 'configuring' may relate to the altering of the wavelength of and/or current to the LEDs." *Id.* at 28. Biofrontera asserts that "[b]ecause of these competing embodiments, a POSITA is left to guess which definition is required by the claim language, and the claims fail to inform the scope of the claims with reasonable certainty." *Id.* at 31.

Sun Pharma asserts that "[a] POSITA would understand with reasonable certainty that 'individually configurable to control illumination' means that the illumination from each panel can be individually controlled, *i.e.*, the power output and/or the light intensity emitted from the panel can be individually controlled." CMIB at 25-26. Sun Pharma argues that Biofrontera's contention that the phrase "individually configurable to control illumination" refers to physically moving the panels "is not contemplated by the claims or the specification." *Id.* at 26. In contrast, "the '028 Patent consistently uses the term 'individually configurable,' or some variation thereof, in relation to controlling the illumination emitted from the panel's light sources." *Id.*

I find that Biofrontera has not shown, by clear and convincing evidence, that this term is indefinite. Beginning with the claim language itself, the claims require an illuminator comprising "five panels connected by hinged structures." '028 patent at cls. 16, 21. The claims both specify that "the five panels are individually configurable to control illumination from each of the five panels." *Id.* The claims also require that the illuminator is "configured to uniformly illuminate a treatment surface of the patient via the light sources." *Id.* Claim 16 further provides that the light sources are "configured to output light uniformly during at least part of a time when the treatment surface is illuminated." *Id.* at cl. 16. Thus, while the claims provide that the illuminator and the

light sources are configured to uniformly provide light, the only mention of controlling illumination is with respect to the panels.

Claim 21 also specifically refers to the physical manipulation of panels. It recites: "one of the five panels being positioned as a center panel configured to face the treatment surface, and two or more of the five panels being configured to be angled relative to the center panel." *Id.* at cl. 21. This limitation does not, however, relate to the control of illumination.

The specification provides support for the understanding that it is the light sources of the panels that can be individually controlled. When the patent uses the term "individually configurable" (or "individually configured"), it does so in relation to the light sources on the panels. First, the patent states: "In order to even further reduce or eliminate optical dead spaces, it is preferable that the light sources on each of the panels are individually configurable to provide specific power output to certain areas of the light sources on the panels to compensate for decreased uniformity." '028 patent at 3:14-19. The patent explains that this can be accomplished, for example, by individually adjusting the LEDS. *Id.* at 3:19-21 ("For example, the power outputted to each individual diode in an array of light emitting diodes (LED) may be individually adjusted."). Other portions of the specification further support this understanding. The patent states:

> In addition, the LED arrays 60 may be configured to emit light continuously or the LED arrays 60 may be configured to flash the diodes on and off based on a predetermined interval. Furthermore, the LED arrays 60 may be configured such that only one wavelength of light (*e.g.*, blue) is emitted. Alternatively the LED arrays 60 may be configured such that two or more wavelengths of light are emitted from the arrays.

Id. at 4:15-22. Next, the patent explains:

> In order to increase the uniformity of light exposure to the treatment area while maintaining a practical size of the illuminator, the LED arrays 60 may be individually configured to increase the intensity of light emitting from certain diodes to compensate for this fall-off effect.

> An example in which the LED arrays 60 may be individually configured is shown in FIG. 5. Here, the LED arrays 60 are divided into three general areas, which may be described as 'addressable strings.' . . . The current to each area is adjusted in order to adjust the intensity of light emitting from each of the areas.

Id. at 6:18-33. Finally, the patent provides:

> Furthermore, by using either pre-programmed settings or sensors to detect the curvature of the surface to be treated, the LED arrays 60 can be individually configured to emit more intense light to only those areas that require it. This allows for an increase in uniformity of light exposure in an efficient manner as power output and/or light intensity is increased to only certain diodes, in accordance with need.

Id. at 6:43-50. Thus, the patent makes it clear that the light sources or LEDs are individually configurable to control the illumination from each of the five panels.

Biofrontera acknowledges that these passages "suggest[] that the 'configuring' may relate to the altering of the wavelength of and/or current to the LEDs." RMIB at 28. It notes, however, that "[t]he explicit language of the claims . . . states that 'the five ***panels*** are individually configurable to control illumination,' directly referring to the ***panels*** as the component that is 'configurable.'" *Id.* at 29 (emphasis in original). The above portions of the specification, however, "call[] out the LED arrays or individual diodes on the panels as being configurable, not the panels." *Id.*

I acknowledge this discrepancy but find that the rest of the intrinsic record provides information that would inform one of skill with respect to the meaning of the term. The claims provide that there are "light sources disposed on surfaces of the five panels." '028 patent at cl. 16, 21; *see also id.* at 3:56-57 (explaining that, in one embodiment, "[e]ach panel contains an array of light emitting diodes (LED) 60"). The specification further provides that the light sources are controlled by a control unit. It explains that "[a]t least one control unit is also connected to the panels to regulate power to the lights to achieve the required uniformity and intensity for the target treatment. . . . Alternatively, each panel may have a dedicated control unit to regulate power to the

individual LED array on a given panel to allow for more particular fine-tuning of the illuminator, which may further enhance uniformity and increase efficiency." '028 patent at 5:52-62. Reading the specification as a whole, a person of ordinary skill in the art would understand the illumination on the light sources on a panel are individually configurable and that this can be accomplished via a control unit connected to the panels or a control unit dedicated to each panel. CMIB Ex. D at ¶ 60. Thus, the patent explains how the five panels are individually configurable to control illumination from each of the five panels.

Biofrontera also argues that claims 16 and 19 illustrate that "where Sun [Pharma] intended for the light sources to be 'configurable,' the claims were drafted to reflect this." RMIB at 29-30. Biofrontera notes that claim 16 recites "the illuminator being configured to uniformly illuminate a treatment surface of the patient via the light sources, the light sources being configured to output light uniformly during at least part of a time when the treatment surface is illuminated." *Id.* (quoting '028 patent at cl. 16). It also notes that claim 19 recites "light sources [that] are configured to output red light." RMRB at 16 (quoting '028 patent at cl. 19). Neither of these claims, however, specify that the light sources are configured *to control* illumination from each of the panels.

I also disagree with Biofrontera that the specification provides support for the understanding that the claim term can be read to require physical manipulation. Although the specification references physical manipulation of panels, it does not use the words "individually configurable" in conjunction with such manipulation. Additionally, while the manipulation of panels may have an effect on illumination, the patent does not provide that the manipulation of panels *controls* illumination. The four portions of the specification cited by Biofrontera read as follows:

- "One embodiment of the present invention uses a plurality of panels, wherein at least one panel is of a different width than the other panels. This

panel is positioned between two other panels and, in a way, acts as a 'lighted hinge' to provide enough 'fill-in' light to reduce or eliminate the optical dead spaces when the panels are bent into a certain configuration." '028 patent at 2:65-3:4.

- "Configuring an illuminator to conform to the curved surface (*e.g.*, a U-shaped configuration designed to 'wrap around' the curvature of the surface aids in reducing [the fall-off] effect and increases overall uniformity." *Id.* at 6:11-14.

- "Once a treatment is selected, the illuminator may be automatically positioned into the proper configuration by the actuators without requiring the user to move the system by hand." *Id.* at 7:40-43.

- "The adjustable illuminator of the present invention allows for an infinite amount of configurations that can be adapted for the targeted treatment area. The configurations may range from a flat-plane emitter (as shown in FIGS. 1B and 2B) to a substantially U-shaped configuration (as shown in FIGS. 1A and 2A). The adjustable illuminator may also be configured such that the two end panels 10*a*, 10*e* can be pulled back relative to the three middle panels 10*b*, 10*c*, 10*d*, such that a smaller U-shaped configuration may be created by the middle panels." *Id.* at 7:50-58.

As can be seen in the excerpts, there is no mention of control of illumination. I thus do not find that the portions of the specification support the idea that the claim term can be read as requiring physical manipulation of the panels to control illumination.

Accordingly, in this Investigation, the term "the five panels are individually configurable to control illumination from each of the five panels" will be construed in accordance with its plain and ordinary meaning, which is "the power output and/or light intensity of each panel can be individually controlled."

5. "within approximately four inches of the treatment surface"

The term "within approximately four inches of the treatment surface" appears in claims 1, 20, and 21 of the '028 patent. The parties disagree on the claim construction of this term and have proposed the following constructions:

SUN PHARMA	BIOFRONTERA
Plain and ordinary meaning	"less than or equal to four inches from the treatment surface"

JC at 2.

Sun Pharma explains that "[b]ecause 'approximately' modifies 'four inches,' a POSITA would understand that the invention does not require an exact measurement of four inches – rather, the panels can be positioned within more or less four inches of the treatment surface." CMIB at 28. Sun Pharma notes that "Biofrontera's construction, by putting a hard upper limit on four inches, reads out the word 'approximately' from the claim language." *Id.* Sun Pharma further explains that "by Biofrontera's logic, the claims include positioning the panels a mere one-tenth of an inch from the treatment surface – which could cause severe damage to a patient's skin." *Id.* Sun Pharma argues that "[t]he specification of the '028 Patent . . . reflects that the phase 'within approximately four inches of the treatment surface' has a reasonable variance – both less than and greater than – of four inches from the treatment surface." *Id.* at 29.

Biofrontera asserts that "the patentee's use of 'within' modifies the phrase "approximately four inches' to mean 'less than or equal to four inches from the treatment surface.'" RMIB at 21. According to Biofrontera, "the claim language directly ties the 'within approximately four inches' treatment distance with the coexistent requirement that the claimed systems and methods must provide 'uniform illumination' of the treatment surface." *Id.* Biofrontera therefore asserts that "a POSA would look to the specification for discussion of treatment distances that allow for 'uniform illumination' of the treatment surface." *Id.* at 22. Biofrontera explains that "the '028 Patent indicates that the uniform illumination . . . occurs over treatment distances of two and four inches" and that four inches is "the upper limit." *Id.* Biofrontera states that "the '028 Patent does not

provide any disclosure suggesting that the device can or should be operated at distances greater than four inches." *Id.* at 23.

The primary dispute between the parties relates to whether the claims cover panels positioned more than four inches from the treatment surface or whether four inches is a strict upper bound on the positioning of the panels. Turning first to the language of the claims itself, the claim recites that "five panels are positioned to allow treatment within approximately four inches of the treatment surface." '028 patent at cl. 1 (emphasis added). The word "approximately" modifies the phrase "four inches." The plain and ordinary meaning of the word "approximately" thus suggests that the positioning can be either more or less than four inches from the treatment surface, so long as the distance is "approximately four inches."

The specification does not provide a clear indication that the patent excludes the positioning of panels slightly more than four inches. When describing the distance between the panels and the treatment surface, the specification explains that, in one embodiment, the distance will be between two and four inches:

> In one embodiment, the measured output over the active emitting area (over the entire active emitting area) is within 60% of the measured maximum (over the entire active emitting area) measured with a cosine response detector over all operation distances. More preferably, the measured output over the emitting area is within 70% of the measured maximum over a distance of two and four inches. Even more preferably, the measured output over the emitting area is within 80% of the measured maximum over a distance of two and four inches.

'028 patent at 8:58-67. Biofrontera asserts that the reference to "a distance of two and four inches" "is reflective of the range of treatment distances, with four inches being the upper limit." RMIB at 22. There are two problems with this reading. First, the specification does not specifically state that there is an upper limit on the distance. Nor is there anything that indicates that uniform

illumination cannot be achieved at a distance other than between the range, such as at 4.1 inches.[8] Without some indication of an intent to restrict the scope in this manner, I decline to read this limitation into the claim. *Seachange Int'l., Inc. v. C-COR, Inc.*, 413 F.3d 1361, 1376 (Fed. Cir. 2005) ("[I]t is improper to import a limitation into a claim where the limitation has no basis in the intrinsic record.").

Second, the specification explicitly states that this description is "one embodiment" and that, even within the embodiment, the distance of two to four inches is merely preferable. '028 patent at 8:58-67 ("More preferably, the measured output over the emitting area is within 70% of the measured maximum over a distance of two and four inches."). It would be improper to limit the invention to panels positioned between two and four inches from the treatment surface based off of this one embodiment, without any indication of an intent to so limit. *GE Lighting Sols., Inc. v. AgiLight, Inc.*, 750 F.3d 1304, 1309 (Fed. Cir. 2014) ("[I]t is improper to read limitations from a preferred embodiment described in the specification – even if it is the only embodiment – into the claims absent a clear indication in the intrinsic record that the patentee intended the claims to be so limited."). Biofrontera does not cite to such evidence. Indeed, the asserted claim themselves are different in scope than this embodiment, by claiming a distance of "approximately four inches," as opposed to a distance of between two and four inches.

[8] Biofrontera argues that "the examples provided in the '028 Patent only demonstrate 'uniform illumination' at a treatment distance of two inches." RMIB at 23. In support of this statement, it argues that the patent describes "the light uniformity achieved with the current device (Fig. 8) was assessed using 'a cosine response detector, which mimics the response of a patient's skin to the incident of light as described above, at a distance of two inches.'" *Id.* (citing '028 patent at 8:15-21). Once again, the patent does not limit the distance to two inches, as is clear from the fact that the specification includes an embodiment in which the panels can have a distance of two to four inches from the treatment surface.

Biofrontera makes two other arguments in support of its proposal. I am not persuaded by either argument. First, Biofrontera asserts that its "construction is consistent with Sun Pharma's own assertions as to why its product meets the claimed requirements." RMIB at 23. Biofrontera notes that Sun Pharma's user manual provides that the treatment surface "should be no further than 4 [inches] from the [device's] surface." *Id.* (quoting RMIB Ex. 12). Statements in Sun Pharma's user manual about the operation of its own products do not override the intrinsic evidence. *Bell Atl. Network Servs., Inc. v. Covad Communications Group, Inc.*, 262 F.3d 1258, 1267 (Fed. Cir. 2001) ("Such intrinsic evidence is the most significant source of the legally operative meaning of disputed claim language."). Second, Biofrontera argues that its construction is supported by a claim construction order issued in litigation between Sun Pharma's predecessor and Biofrontera with respect to a different patent. RMIB at 24. Biofrontera notes that this patent was incorporated into the '028 patent by reference. Tr. at 128:9-13; *see* '028 patent at 1:50-57 (explaining that the patent is "incorporated by reference in [its] entirety for the techniques, methods, compositions, and devices related to PDT and PD"). Even so, the patent discussed in the prior claim construction order is a different patent with a different intrinsic record. *See SIPCO, LLC v. Emerson Elec. Co.*, 980 F.3d 865, 870 n.2 (Fed. Cir. 2020) ("We find it unsurprising that similarly worded claims may be construed differently when presented in such different contexts and different records."). Additionally, the term construed by the district court was "all operation distances." RMIB at 24. Construing "all operation distances" as "the range of distances between 2 [inches] and 4 [inches]," is different from finding that "approximately four inches" means "less than or equal to four inches."

Nor am I persuaded by Biofrontera's argument that the inclusion of the word "within" demonstrates that there is an upper limit. Biofrontera states that "the patentee's use of 'within'

modifies the phrase 'approximately four inches' to mean 'less than or equal to four inches from the treatment surface." RMIB at 21. Biofrontera's understanding would completely read out "approximately" from the claim language. The Federal Circuit has explained, however, that there is a "well-established rule that 'claims are interpreted with an eye toward giving effect to all terms in the claim.'" *Digital-Vending Services Int'l*, 672 F.3d at 1275 (quoting *Bicon,* 441 F.3d at 950). Unlike "nested hinges" above, the intrinsic evidence does not support construing the term in a manner that renders "approximately" superfluous.

I am, however, persuaded by Biofrontera's argument with respect to "within" generally. Biofrontera argues that "'within' means 'less than.'" Tr. at 125:2-3. Sun Pharma does not contradict this understanding. *See generally* CMIB; CMRB; Tr. at 136:4-6 (offering no rebuttal on the claim term). Thus, while the claim language itself does not set four inches as a strict upper limit, I find that interpreting "within" as "less than or equal to" is consistent with the plain and ordinary meaning of that term.

Accordingly, in this Investigation, the term "within approximately four inches of the treatment surface" will be construed as "less than or equal to approximately four inches from the treatment surface."[9]

[9] Biofrontera argues that, without an upper limit, the claims are invalid for lack of written description. RMRB at 14-15. This issue is not one of claim construction and will be addressed in the final initial determination. Biofrontera also argues that the word "approximately" is unclear in its scope. *Id.* at 14 ("[T]he specification does not leave a range of disclosure open in the specification for what 'approximately four inches' means, beyond the whims of a complainant in litigation."). This particular argument has not been fully addressed by the parties, as neither parties' construction addresses the scope of "approximately." As such, to the extent Biofrontera desires to maintain this argument, it will be addressed in the final initial determination.

6. "a recess"/"the recess"

The term "a recess"/ "the recess" appears in claims 17 and 18 of the '512 patent. The parties disagree on the claim construction of this term and have proposed the following constructions:

SUN PHARMA	BIOFRONTERA
Plain and ordinary meaning	Plain and ordinary meaning of "an indentation in a surface"

JC at 2.

Sun Pharma argues that "[t]he term 'a recess' is straightforward and requires no construction beyond its plain and ordinary meaning." CMIB at 30. Sun Pharma states that "[i]n the '512 patent, the term describes a physical feature on the panel that receives a flange of one of the nested hinges." *Id.* It asserts that "the specification further supports the claim language" and "explains how a recess of the panel enables a particular configuration of panels fitting closer together, to assist with the goal of reducing optical dead spaces during treatment." *Id.* at 30-31. According to Sun Pharma, "Biofrontera has no justification, other than advancing an apparent noninfringement position, for its proposal to replace a simple word with a construction that does not appear anywhere in the specification." *Id.* at 31.

Biofrontera argues that the claims and specification "do not provide definitive guidance as to what a 'recess' is." RMIB at 20. Accordingly, Biofrontera suggests the Commission turn to the "sources available to the public," such as dictionary definitions. *Id.* Biofrontera states that dictionaries define recess as an "indentation in a surface." *Id.*

Both parties agree that "recess" has a plain and ordinary meaning to one of skill in the art and that the plain and ordinary meaning should apply here. Biofrontera argues, however, that the plain and ordinary meaning of the term must be defined to provide further guidance as to the meaning of "recess." While a court need not construe every term in a claim, if the parties present

a dispute, it is the court's duty to provide a construction. *O2 Micro Intern. Ltd. v. Beyond Innovation Technology Co., Ltd.*, 521 F.3d 1351, 1362 (Fed. Cir. 2008) ("When the parties present a fundamental dispute regarding the scope of a claim term, it is the court's duty to resolve it."). Given that Biofrontera represents that there is a dispute, I find it is necessary to set forth a definition of the plain and ordinary meaning.

Biofrontera suggests that I can turn to dictionary definitions to construe the term. The three dictionary definitions that Biofrontera cites, however, are all slightly different: (1) "an indentation or small hollow"); (2) "indentation, cleft"; and (3) "an indent in a wall or surface." RMIB at 20 (citing RMIB Exs. 8, 9, 10). Biofrontera's proposal itself does not seek to adopt any of these definitions word-for-word, but instead seeks to combine them.

The third definition is from a dictionary related to "Construction, Surveying, and Civil Engineering." RMIB Ex. 10. Biofrontera does not explain why this dictionary is probative of the meaning to a person of ordinary skill in the art, given that the invention involves a medical device – not construction. I thus disregard this definition. This dictionary is also the only dictionary that includes "in a . . . surface" in the definition. As such, I decline to construe the term with the words "in a surface."

The remaining two definitions each include "indentation," but also include an alternative: "small hollow" or "cleft." To ensure that the entirety of the plain and ordinary meaning of this term is captured, I find that it is appropriate to include both of these terms.

Accordingly, in this Investigation, the term "recess" will be construed as "indentation, small hollow, or cleft."

VII. ORDER

Within seven days of the date of this document, the parties shall jointly submit a single proposed public version of this document with any proposed redactions indicated in red. If the

parties submit excessive redactions, they may be required to provide declarations from individuals with personal knowledge, justifying each proposed redaction and specifically explaining why the information sought to be redacted meets the definition for confidential business information set forth in 19 C.F.R. § 201.6(a). To the extent possible, the proposed redactions should be made electronically, in a single PDF file using the "Redact Tool" within Adobe Acrobat. The proposed redactions should be submitted as "marked" but not yet "applied." The proposed redactions should be submitted via email to Moore1411@usitc.gov and not filed on EDIS.

Bryan F. Moore
Administrative Law Judge