HEMOSTASIS VALVES AND METHODS OF USE

CROSS-REFERENCE TO RELATED APPLICATION

[0001] This application claims the benefit of U.S. Provisional Application No. 62/554,931, filed on September 6, 2017, entitled "HEMOSTASIS VALVES AND METHODS OF USE," which is herein incorporated by reference.

BACKGROUND

[0002] During a surgical procedure, a portion of a patient's body (e.g., vasculature) is accessed to allow for performance of a desired intervention or treatment. During such surgical procedures, it is desired to minimize patient blood loss, prevent delivery of air into the vasculature, and to maintain the sterility of the accessed portions or sites of the patient's body so as to prevent issues such as infection. Further, the desire for improved patient outcomes has led to the development of hemostasis valves that facilitate minimally invasive surgery.

[0003] In minimally invasive surgery, small incisions are created through a blood vessel which one or several catheters are inserted. Each of these one or several catheters can define a lumen extending longitudinally through that catheter. These catheters are moved to a position proximate to tissue, nerves, or other body structures targeted by the surgery, and then tools for performing the procedure are inserted through the lumens of some or all of these catheters.

[0004] To minimize blood loss, prevent delivery of air into the vasculature, and to facilitate maintenance of sterility within the patient's body (e.g., blood vessel), these catheters are equipped with hemostasis valves. These valves seal or selectably seal the lumens of the catheters. In many instances, these valves can seal the lumen of the catheter when a tool extends through the catheter, and specifically through the valve. Additionally the valves can seal the lumen when a tool is removed or does not extend through the catheter.

[0005] While such traditional hemostasis valves are greatly beneficial for intravascular access, they have some drawbacks. For example, some valves may not seal adequately for all interventional applications or tools, and/or the operation of some valves may be complicated for operator use. The drawbacks of such valve designs may in turn increase the complexity of any

IMPERATIVE Ex. 1017
IPR Petition - US 11,554,005

surgery performed therewith and/or reduce patient safety (e.g., bleeding, infection, and/or other detrimental complications). Accordingly, new and improved hemostasis valves and methods of use are desired.

SUMMARY

[0006] The following relates to valves, medical systems incorporating valves, and methods of using the same. The valve can include a tubular member that can be constricted, collapsed, and/or sealed by one or several tensioning mechanisms. The tensioning mechanism can include at least one filament that extends around at least a portion of the tubular member. The filament can interact with the tubular member to constrict, collapse, and/or seal the tubular member via manipulation of the tensioning mechanism(s). A tool can be inserted through the valve to gain access to a patient's body and specifically to gain access to a blood vessel. Through the use of the tensioning mechanism and filament to constrict, collapse, and/or seal the tubular member, the valve can seal around a wide range of tool sizes and shapes, as well as multiple tools of differing sizes simultaneously. Additionally, such a valve creates a robust seal that maintains its seal when a vacuum is applied such as occurs during aspiration.

[0007] Aspects of the present disclosure relate to a hemostatic valve for sealing a medical device. The hemostatic valve includes an elongate member having a first end, a second end, and a central lumen extending therebetween. In some embodiments, the elongate member is pliable. The hemostatic valve can include a reinforcement structure extending along at least a portion of the elongate member, such that the reinforcement structure is coupled to the elongate member. The hemostatic valve includes an active tensioning mechanism coupled to the elongate member. In some embodiments, the tensioning mechanism is moveable between a first configuration in which the central lumen is constricted and sealed and a second configuration in which the central lumen is open. Optionally, the valve may be manually adjusted by the user to intermediate positions between fully open and fully closed. Additionally, an instrument (e.g. catheter) may provide an intermediate position where the valve creates hemostasis without user adjustment.

[0008] In some embodiments, the elongate member can be a compliant polymer tube. In some embodiments, the tensioning mechanism can include at least one filament extending at least partially around the elongate member. In some embodiments, the reinforcement structure is

positioned between the at least one filament and the elongate member. In some embodiments, the reinforcement structure can be a braided mesh. In some embodiments, the reinforcement structure is coupled to the elongate member at a position proximate to the first end of the elongate member and at a position proximate to the second end of the elongate member. In some embodiments, the reinforcement structure is not coupled to the elongate member at a position between the first end of the elongate member and the second end of the elongate member. In some embodiments, the central portion of the compliant polymer tube that is constrained or collapsed by the tensioning mechanism, and at least one filament, is not coupled to the reinforcement structure.

[0009] In some embodiments, the tensioning mechanism can include an actuator coupled to the at least one filament. In some embodiments there are two tensioning mechanisms coupled to the at least one filament that operate in opposite directions. In some embodiments the two tensioning mechanisms are attached to the same filament. In some embodiments the two tensioning mechanisms are attached to opposing filaments. In some embodiments, the actuator can be moveable to control movement of the at least one filament from a first position in which the central lumen is constricted and sealed to a second position in which the central lumen is open. In some embodiments, the at least one filament is in the first position when the tensioning mechanism is in the first configuration. In some embodiments, the actuator is biased towards the first position. In some embodiments, the actuator is biased toward the second position. In some embodiments, the actuator can be a manual actuator.

[0010] In some embodiments, the at least one filament forms a loop around the elongate member. In some embodiments, the at least one filament forms a bight around a portion of the elongate member. In some embodiments, the at least one filament can include a first filament and a second filament. In some embodiments, each of the first filament and the second filament are coupled to the same actuator. In some embodiments, each of the first filament and the second filament are coupled to different actuators. In some embodiments, the first filament and the second filament are moveable from the first position to the second position. In some embodiments, each of the first filament and the second filament form a loop around the elongate member. In some embodiments, the first filament forms a first bight around a first portion of the elongate member, and the second filament forms a second bight around a second portion of the elongate member. In some embodiments, the first bight extends through the second bight.

[0011] In some embodiments, the hemostatic valve can include a shell defining a first aperture and a second aperture. In some embodiments, the elongate member extends from the first aperture to the second aperture and fluidly couples the first aperture and the second aperture. In some embodiments, the tensioning mechanism is self-adjustable to seal around tools of different sizes extending through the hemostatic valve. In some embodiments, the central lumen can comprise a single lumen, and in some embodiments, the central lumen can comprise a plurality of lumens.

[0012] One aspect of the present disclosure relates to a delivery system for intravascular access of a blood vessel within a patient's body. The delivery system includes a catheter having a first end, a second end, and a catheter lumen extending therebetween and a hemostatic valve coupled to the first end of the catheter. The hemostatic valve includes a tubular member having a first end, a second end, and a central lumen extending therebetween. In some embodiments, the central lumen of the tubular member is fluidly coupled with the catheter lumen. The hemostatic valve includes an active tensioning mechanism coupled to the tubular member, the tensioning mechanism can be moveable between a first configuration in which the tensioning mechanism constricts on the central lumen and the central lumen is sealed and a second configuration in which the central lumen is open.

[0013] In some embodiments, the hemostatic valve further includes a reinforcement structure extending along at least a portion of the tubular member. In some embodiments, the reinforcement structure is located between the tensioning mechanism and the tubular member. In some embodiments, the reinforcement structure can be a braided mesh. In some embodiments, the reinforcement structure is coupled to the tubular member at a position proximate to the first end of the tubular member and at a position proximate to the second end of the tubular member. In some embodiments, the reinforcement structure is adhered to the tubular member at the first end of the tubular member and at the second end of the tubular member. In some embodiments, the reinforcement structure is uncoupled to the tubular member between the first end of the tubular member and the second end of the tubular member.

[0014] In some embodiments, the tensioning mechanism can include at least one filament extending at least partially around the tubular member. In some embodiments, the tensioning mechanism can include an actuator coupled to the at least one filament. In some embodiments,

moving the tensioning mechanism from the first configuration to the second configuration can include moving the actuator and the thereto coupled at least one filament from a first position to a second position. In some embodiments, the filament constricts and seals the central lumen of the tubular member when the filament is in the first position.

[0015] In some embodiments, the actuator can be a manual actuator. In some embodiments, the actuator can include a pair of opposing and depressable buttons, which buttons can be biased towards an undepressed position. In some embodiments, the central lumen is sealed when the buttons are in the undepressed position. In some embodiments, the filament can be a monofilament. In some embodiments, the filament can be at least one of: a polymer filament; or a metallic filament. In some embodiments, the catheter can include a thrombus extraction device.

[0016] One aspect of the present disclosure relates to a method of sealing a delivery device accessing a blood vessel of a patient. The method includes inserting the delivery device including a catheter and a hemostatic valve into the blood vessel of the patient. In some embodiments, the catheter can have a first end, a second end, and a catheter lumen extending therethrough. In some embodiments, the hemostatic valve can be coupled to the first end and can have a tubular member defining a central lumen fluidly coupled with the catheter lumen and a tensioning mechanism coupled with the tubular member. In some embodiments, the tensioning mechanism collapses and seals the central lumen in a first configuration and thereby seals access to the blood vessel. The method can include moving the tensioning mechanism of the hemostatic valve to a second configuration. In some embodiments, the central lumen is open and access to the blood vessel is unsealed when the tensioning mechanism is in the second configuration. The method can include advancing a shaft of a tool through the delivery device until a first end of the tool reaches a desired position within the blood vessel of the patient and a portion of the shaft is positioned within the central lumen of the tubular member. The method can include returning the tensioning mechanism of the hemostatic valve to the first configuration such that the tubular member collapses on the shaft of the tool and seals around the shaft of the tool.

[0017] In some embodiments, the method includes retracting the shaft of the tool from the delivery device. In some embodiments, the tensioning mechanism is maintained in the first configuration during and after the retracting of the shaft of the tool from the delivery device. In some embodiments, the tensioning mechanism is moved to the second configuration during the

retracting of the shaft of the tool from the delivery device, and the tensioning mechanism is returned to the first configuration after the shaft of the tool is retracted from the delivery device.

[0018] In some embodiments, the tensioning mechanism can include at least one filament extending at least partially around the tubular member. In some embodiments, the at least one filament collapses the tubular member when the tensioning mechanism is in the first configuration. In some embodiments, the at least one filament circumferentially constricts the tubular member to collapse the tubular member when the tensioning mechanism is in the first configuration. In some embodiments, the hemostatic valve can include a reinforcement structure located between the at least one filament and the tubular member.

[0019] In some embodiments, the at least one filament forms a loop around the elongate member, and moving the tensioning mechanism from the second configuration to the first configuration reduces a size of the loop to thereby constrict the tubular member within the loop. In some embodiments, the filament forms at least one bight around a portion of the elongate member. In some embodiments, the filament can include a first filament and a second filament. In some embodiments, the at least one bight can include a first bight oriented in a first direction and formed by the first filament and a second bight oriented in a second direction and formed by the second filament. In some embodiments, the first and second bights overlap to encircle a portion of the tubular member within a constricting area.

[0020] In some embodiments, moving the tensioning mechanism from the second configuration to the first configuration can include moving the first bight in the first direction and the second bight in the direction to reduce the size of the constricting area and collapse and seal the central lumen of the tubular member. In some embodiments, the tensioning mechanism can include an actuator. In some embodiments, moving the tensioning mechanism to the second configuration can include manipulating the actuator. In some embodiments, the method includes applying a vacuum to the delivery device and/or delivery system to aspirate material through the catheter. In some embodiments, the central lumen remains sealed during the aspiration. In some embodiments, the tool can include a thrombus extraction device.

BRIEF DESCRIPTION OF THE DRAWINGS

[0021] Figure 1 is a perspective view of one embodiment of a delivery device.

[0022] Figure 2 is a side-section view of one embodiment of a hemostasis valve in a first configuration.

[0023] Figure 3 is a side-section view of one embodiment of the valve in a second configuration.

[0024] Figure 4 is a side-section view of one embodiment of the valve in the first configuration and with a tool extending through the valve.

[0025] Figure 5 is a side-section view of one embodiment of a single-button hemostasis valve in a first configuration.

[0026] Figure 6 is a perspective view of a filament of a valve forming a loop.

[0027] Figure 7 is a perspective view of two filaments of a valve, each of the filaments forming a loop.

[0028] Figure 8 is a perspective view of two overlapping and interlocked bights in an open configuration.

[0029] Figure 9 is a perspective view of two overlapping and interlocked bights in a closed configuration.

[0030] Figure 10 is a flowchart illustrating one embodiment of a method for sealing a valve and/or catheter.

[0031] Figure 11 is a side view of one embodiment of a thrombectomy system including the delivery device.

[0032] Figure 12 is a side-section view of another embodiment of a hemostasis valve having two-piece caps.

DETAILED DESCRIPTION

[0033] The present disclosure relates to a valve that can be used a hemostasis valve. This valve, also referred to herein as a garrote valve can seal with or without a tool extending through the valve. The garrote valve provides convenient, single-handed operation for a wide range of medical devices including catheters, wires, embolectomy systems, or the like. This single-handed operation of the garrote valve allows the user to easily and quickly swap different tools being used through the

valve without compromising hemostasis and therefore simplifying the procedure. Combined with single-handed operation, the garrote valve provides robust sealing either with or without a tool extending through the valve. This robust sealing minimizes leakage in applications with a pressure differential on different sides of the valve. This pressure differential can arise, for example, during the application of vacuum aspiration in a procedure. Even under such conditions, as well as under other conditions, the garrote valve maintains seal integrity and prevents leakage in one or both directions.

[0034] The garrote valve includes a tubular member. The tubular member is a flexible member that defines a central lumen, which can, in some embodiments, define a single lumen, and in some embodiments, defines a plurality of lumens. In some embodiments, each of the plurality of lumens can comprise the same size and shape, and in some embodiments, some or all of the plurality of lumens can comprise different sizes and shapes. In some embodiments, for example, the plurality of lumens can comprise a lumen sized and/or shaped to receive a guide wire and a lumen sized and/or shaped to receive a tool. The tubular member extends at least partially through a constricting mechanism. The constricting mechanism can be moved from a first configuration to a second configuration, and the constricting mechanism can collapse and/or seal the central lumen of the tubular member when the constricting mechanism is in the first configuration. The constricting mechanism creates the above-discussed robust seal of the tubular member and thus of the valve.

[0035] With reference now to **Figure 1**, a perspective view of one embodiment of a delivery system 100, also referred to herein as a delivery device 100, is shown. The delivery system 100 can include a catheter 102 and a garrote valve 104, also referred to herein as valve 104. The catheter 102 can comprise a shaft 106, also referred to herein as an elongate sheath 106, having a proximal end 108, also referred to herein as a first end 108, that can connect to the valve 104 and a distal end 110, also referred to herein as a second end 110. The shaft 106 can define a catheter lumen 112 extending from the proximal end 108 of the shaft 106 to the distal end 110 of the shaft 106. The catheter 102 and specifically the shaft 106 can comprise a variety of shapes and sizes and can be made from a variety of materials. In some embodiments, the catheter 102 can be flexible and/or can be made from a biocompatible material. The elongate sheath 106 can have an outer diameter of at least 4 French, at least 6 French, at least 8 French, at least 10 French, at least 12 French, at least 14

French, at least 18 French, at least 20 French, at least 22 French, between 4 French and 30 French, between 8 French and 24 French, between 12 French and 20 French, and/or any other or intermediate size.

[0036] The valve 104 can include an outer shell 114. The outer shell 114 can comprise a variety of shapes and sizes and can be made from a variety of materials. In some embodiments, the outer shell 114 can be made from one or several polymers or composites. The outer shell 114 can include features that allow interaction with and/or control of the valve 104 to move the valve 104 between the first configuration and the second configuration.

[0037] The outer shell 114 can include a proximal cap 116 located at a proximal end 118 of the outer shell 114 and a distal cap 120 located at a distal end 122 of the shell 114. The proximal cap 116 can include and/or house a proximal aperture 124, also referred to herein as a proximal channel 124, a first channel 124, or a first aperture 124, that extends through the proximal cap 116, and the distal cap 120 can include and/or house a distal aperture 126, also referred to herein as a distal channel 126, a second channel 126, or second aperture 126, that extends through the distal cap 120. As seen in Figure 1, the distal cap 120 connects to the shaft 106 of the catheter 102 at the distal end 122 of the valve 104.

[0038] The proximal cap 116 and the distal cap 120 are connected via a housing 128. The housing 128 can be a one-piece housing 128 or a multi-piece housing 128. In the embodiment depicted in Figure 1, the housing comprises a two-piece housing 128. The housing 128 can be configured to receive and couple with each of the proximal cap 116 and the distal cap 120, and as seen in Figure 1, the housing 128 is coupled with each of the proximal cap 116 and the distal cap 120 to secure the relative position of the proximal cap 116 and the distal cap 120 with respect to each other.

[0039] The housing 128 can define an interior channel 130 through which an elongate member 132, also referred to herein as a tubular member 132, a septum 132, or a tubular septum 132, can extend and connect the proximal cap 116 and the distal cap 120. The elongate member 132 can comprise a variety of shapes and sizes and can be made from a variety of materials. In some embodiments, the elongate member 132 can comprise a compliant tubular structure that can be, for example, a thin-walled compliant tubular structure. The thin-walled structure of the elongate member 132 can facilitate the collapse, and specifically the uniform collapse of the elongate

member 132 and the sealing of the elongate member 132. In some embodiments, the elongate member 132 is an elastic, resilient material that may comprise a polymer including either a natural or synthetic polymer. In some embodiments, the elongate member can comprise an elastic, resilient material that may comprise silicone, urethane, ethylene-vinyl acetate, natural or synthetic rubber or other elastomers known in the art. In some embodiments, the elongate member 132 can comprise a silicone tube.

[0040] The elongate member 132 can comprise a proximal end 134, also referred to herein as a first end 134, that can couple to the proximal cap 116, and a distal end 136, also referred to herein as a second end 136, that can couple to the distal cap 120. The elongate member 132 can define a central lumen 138 that can extend from the first end 134 to the second end 136 of the elongate member 132. The elongate member 132 can be coupled to the proximal cap 116 such that the central lumen 138 is fluidly coupled with the proximal aperture 124 of the proximal cap 116, and the elongate member 132 can be coupled to the distal cap 120 such that the central lumen 138, as seen in **Figure 2** and in **Figure 3**, is fluidly coupled with the distal aperture 126 of the distal cap 120.

[0041] The central lumen 138 of the elongate member 132 can be defined by a wall of the elongate member 132 that can have a thickness that is uniform along the length of the elongate member 132 between the first end 134 and the second end 136, or that is non-uniform along the length of the elongate member 132 between the first end 134 and the second end 136. In some embodiments, the wall can have a thickness that is approximately between 0.005 inches and 0.05 inches, and/or approximately between 0.010 inches and 0.030 inches. As used anywhere herein, "approximately" refers to a range of +/- 10% of the value and/or range of values for which "approximately" is used.

[0042] In some embodiments, the elongate member 132 can be cylindrically shaped, and specifically can be circular-cylindrically shaped. In some embodiments, the elongate member 132 can be dog-bone shaped to facilitate, for example, connection to each of the proximal cap 116 and the distal cap 120. In some embodiments, the elongate member 132 can include one or several outward-extending protuberances that engage with all or portions of a constricting mechanism 141, also referred to herein as a tensioning mechanism 141, of the valve 104 to secure a position of all or portions of the constricting mechanism 141 with respect to the elongate member 132. In some

embodiments, the constricting mechanism 141 can be self-adjusting to seal around tools of different sizes extending through the valve 104.

[0043] The constricting mechanism 141 can, in some embodiments, collapse and seal the elongate member 132 via compression and/or constriction, and specifically via constriction with at least one filament 150. The constricting mechanism 141 can comprise: an actuator 142 which can be a manual actuator such as one or several buttons 144; and the at least one filament 150 that can extend at least partially around the elongate member 132. In some embodiments, the use of the constricting mechanism 141 can facilitate sealing of the valve around tools or instruments of a wide range of sizes and/or diameters, and particularly around tools or instruments that fit through the elongate member 132.

[0044] The housing 128 can further include one or several retention features 140. The one or several retention features 140 of the housing can engage with and retain all or portions of the constricting mechanism 141 of the valve 104. In some embodiments, the one or several retention features 140 of the housing 128 can retain the actuator 142 and/or can couple the actuator 142 to the housing 128. The actuator 142 can comprise any desired type of actuator including, for example, a manual actuator and/or an automated actuator such as, for example, an electromechanical actuator including a solenoid-based actuator. In some embodiments, the actuator can comprise one or several buttons 144, and specifically, as depicted in Figure 1, the actuator 142 can comprise a first button 144-A and a second button 144-B. Alternatively, and as depicted in **Figure 5**, the actuator 142 can comprise a single button 144. In such an embodiment, the filament 150 can be coupled to the single button 144 and to a portion of the housing 128 such as, for example, to grip portion 500 of the housing 128 such that the movement of the single button 144 causes the sealing and/or opening of the elongate member 132 and of the valve 104.

[0045] The actuator 142 can be biased towards a configuration such as, for example, biased towards the first configuration or biased towards the second configuration. As depicted in Figure 2, which shows the constricting mechanism 141 in the first configuration, the actuator 142 can be biased towards the first configuration wherein the elongate member 132 is collapsed and/or sealed by a bias feature 146. In this first configuration, the buttons 144 can be in a first position, also referred to herein as an undepressed position. This bias feature 146 can, as shown in Figure 2, include a first spring 148-A configured to bias the first button 144-A towards the first position

corresponding to the first configuration of the constricting mechanism 141, and a second spring 148-B configured to bias the second button 144-B towards a first position corresponding to the first configuration of the constricting mechanism 141. One or both of the first spring 148-A and the second spring 148-B can comprise a tension spring, compression spring, a torsion spring, a coil spring, or any other desired type of spring.

[0046] In some embodiments, one or both of the first spring 148-A and the second spring 148-B can generate sufficient force so as to allow actuation of the actuator 142 with a single hand and so as to collapse and seal the elongate member 132 when the constricting mechanism 141 is in the first configuration. In some embodiments, one or both of the first spring 148-A and the second spring 148-B can generate a force of: at least 0.1 pounds, at least 0.2 pounds, at least 0.3 pounds, at least 0.4 pounds, at least 0.5 pounds, at least 0.6 pounds, at least 0.7 pounds, at least 0.8 pounds, at least 0.9 pounds, at least 1 pound, at least 1.5 pounds, at least 2 pounds, at least 3 pounds, at least 5 pounds, and/or at least 10 pounds and in some embodiments one or both of the first spring 148-A and the second spring 148-B can generate a force approximately between: 0.1 and 10 pounds, 0.1 and 5 pounds, 0.1 and 1.5 pounds, 0.2 and 1 pounds, and/or 0.4 and 0.8 pounds.

[0047] The constricting mechanism 141 can include at least one filament 150 that extends at least partially around the elongate member 132. In some embodiments, the at least one filament 150 can circumferentially constrict the elongate member 132 to collapse and seal the elongate member 132 when the constricting mechanism 141 is in the first configuration. The filament can be made from a variety of materials including, for example, a polymer, a synthetic, and/or a metal. In some embodiments, the filament 150 can be nylon, stainless steel, nitinol, silicone, or the like. In some embodiments, the filament can comprise a single strand such as, for example, a monofilament, and in some embodiments, the filament can comprise a plurality of strands that can be, for example, twisted, woven, grouped, and/or fused to form the filament. In some embodiments, the filament 150 can comprise one or several threads, lines, cords, rope, ribbon, flat wire, sheet, or tape.

[0048] The filament 150 can be coupled to the actuator 142 such that the filament 150 selectively constricts, collapses, and/or seals the elongate member 132, and specifically the central lumen 138 of the elongate member 132 based on the movement and/or position of the actuator 142. In some embodiments, the filament 150 can be connected to one or both of the buttons 144-A, 144-B such that the filament 150 collapses, constricts, and/or seals the elongate member 132 and

specifically the central lumen 138 of the elongate member 132 when the buttons 144-A, 144-B are in the first position, and the filament 150 can be connected to one or both of the buttons 144-A, 144-B such that the elongate member 132 and specifically the central lumen 138 of the elongate member 132 is open and uncollapsed when the buttons 144-A, 144-B are in the second position. In some embodiments in which the actuator 142 comprises a single button 144, as depicted in Figure 5, the filament 150 can be connected to the button 144 and to the housing 128 such that the filament 150 is tightened when the button 144 moves to the first position.

[0049] In some embodiments, the at least one filament 150 can extend along an axis 152 that can be perpendicular to a central axis 154 of the elongate member 132 and/or of the apertures 124, 126. In some embodiments, the axis 152 of the at least one filament 150 can intersect and be perpendicular to the central axis 154 of the elongate member 132 and/or of the apertures 124, 126. In some embodiments, the actuator 142, and specifically the buttons 144-A, 144-B can move along this axis 152 when moved from the first position to the second position.

[0050] In Figure 3, an embodiment of the valve 104 with the constricting mechanism 141 in the second configuration is shown. As specifically shown, both of the first and second buttons 144-A, 144-B are in the second position, depressed into the retention features 140 of the housing 128. In this second position, the filament 150 is loosened, thereby allowing the expansion of the elongate member 132 and the unsealing of the central lumen 138 of the elongate member 132.

[0051] As further seen in Figure 3, the proximal cap 116 has a proximal end 300 and a distal end 302. The proximal cap 116 can include a funnel portion 301 of the proximal aperture 124, which funnel portion 301 can facilitate insertion of a tool into the proximal aperture 124. The distal end 302 of the proximal cap 116 can partially extend into the interior channel 130 of the housing 128. The proximal cap 116 can include a mating feature 304 that can mate with the proximal end 134 of the elongate member 132. In some embodiments, the proximal end 134 of the elongate member 132 can fit over the mating feature 304 of the proximal cap 116. The proximal end 134 of the elongate member 132 can be compressed between the mating feature 304 of the elongate member 132 and a portion of the interior channel 130 of the housing 128 into which the mating feature 304 is inserted to thereby secure the proximal end 134 of the elongate member 132 on the mating feature 304. In some embodiments, the proximal end 134 of the elongate member 132 can be further secured on the mating feature 304 by a proximal O-ring 306 that can be compressed

between the housing 128 and the mating feature 304 of the proximal cap 116 to sealingly couple the elongate member 132 to the proximal cap 116.

[0052] The distal cap 120 has a proximal end 308 and a distal end 310. The distal cap can include a mating feature 312 located on the proximal end 308 of the distal cap 120, which mating feature 312 can mate with the distal end 136 of the elongate member 132. In some embodiments, the distal end 136 of the elongate member 132 can fit over the mating feature 312 of the distal cap 123. The distal end 136 of the elongate member 132 can be compressed between the mating feature 312 of the elongate member 132 and a portion of the interior channel 130 of the housing 128 into which the mating feature 312 is inserted to thereby secure the distal end 136 of the elongate member 132 on the mating feature 312. In some embodiments, the distal end 136 of the elongate member 132 can be further secured on the mating feature 312 by a distal O-ring 314 that can be compressed between the housing 128 and the mating feature 312 of the proximal cap 116 to sealingly couple the elongate member 132 to the distal cap 120.

[0053] The distal cap 120 can, in some embodiments, further include a side port barb 314 that can extend laterally away from the distal cap 120 and specifically away from the distal aperture 126 of the distal cap 120. The side port barb 314 can define a side port channel 316 that can extend through the side port barb 314 and fluidly connect to the distal aperture 126. In some embodiments, the side port barb 314 can include a securement feature 318 such as a barb that can secure coupling of a hose or tube to the side port barb 314.

[0054] In some embodiments, the side barb 314 can be used to apply a vacuum to the portions of the delivery device 100, and particularly to portions of the delivery device 100 that are distal of the axis 152 along which the elongate member 132 seals. This vacuum can be applied to aspirate a material through the delivery device 100, and specifically through the catheter 102 of the delivery device. This aspirated material can be a biological material including, for example, bodily fluids, multi-phase bodily materials that can include, for example, a fluidic portion and at least one solid portion, or the like.

[0055] In some embodiments, due to the narrowing shape of the elongate member 132 when the constricting mechanism 141 is in the first configuration, a vacuum applied to the portions of the delivery device 100 distal to the axis 152 draws the elongate member 132 towards the first configuration and can, in some embodiments, increase the strength, robustness, and/or strength of

the seal of the valve 104. This attribute of the valve 104 can provide benefits over other valve designs in which a vacuum can compromise the seal of the valve, and thus the ability to draw a vacuum and aspirate can be limited.

[0056] In some embodiments, the valve 104 can further include a reinforcement structure 320 that can extend along all or portions of the elongate member 132. The reinforcement structure 320 can facilitate the uniform collapse of the elongate member 132, can prevent the at least one filament 150 from cutting through and/or tearing the elongate member 132, and can assist in guiding one or several tools through the elongate member 132. The reinforcement structure 320 can be tubular, can extend along and around the elongate member 132, and can be positioned so as to be between the elongate member 132 and the at least one filament 150.

[0057] The reinforcement structure 320 can include a proximal end 322 and a distal end 324. In some embodiments, the reinforcement structure 320 extends along and around the elongate member 132, and is positioned such that the proximal end 322 of the reinforcement structure 320 is proximate to the first end 134 of the elongate member 132 and the distal end 324 of the reinforcement structure 320 is proximate to the second end 136 of the elongate member 132.

[0058] The reinforcement structure 320 can be coupled to the elongate member 132. In some embodiments, the reinforcement structure 320 is coupled to the elongate member 132 along the length of the reinforcement structure 320, and in some embodiments, the reinforcement structure 320 is coupled to the elongate member 132 and distinct positions along the length of the elongate member 132 and/or the reinforcement structure 320. In one embodiment, for example, the reinforcement structure 320 can be coupled to the elongate member 132 at one or both of the proximal end 322 of the reinforcement structure 320 and the distal end 324 of the reinforcement structure 320 and/or at one or both of the first end 134 and the second end 136 of the elongate member 132. In some embodiments, the reinforcement structure 320 can be coupled to the elongate member 132 via one or several other components of the valve 104. In some embodiments, the reinforcement structure 320 can be coupled to the elongate member 132 via the compression of the reinforcement structure 320 and the elongate member 132 between the housing 128 and one or both of the proximal 116 and the distal 120.

[0059] In some embodiments, the reinforcement structure 320 can be adhered to the elongate member 132 via, for example, an adhesive such as silicone adhesive. In some embodiments, the

adhesive can be circumferentially applied to the reinforcement structure 320 and/or the elongate member 132 in an adhesive ring that can, for example, a have a length approximately between: 0.010 inches and 0.5 inches; 0.02 and 0.4 inches; 0.050 inches and 0.0250 inches, or any other or intermediate range.

[0060] In one embodiment, each of the proximal end 322 and the distal end 324 of the reinforcement structure 320 can be adhered via an adhesive to the elongate member 132. In such an embodiment, the reinforcement structure 320 may be uncoupled to the elongate member 132 at positions other than the coupling at one or both of the proximal end 322 and the distal end 324 of the reinforcement structure 320, and thus the reinforcement structure 320 is uncoupled to the elongate member 132 at a position between the first end 134 and the second end 136 of the elongate member 134 and/or between the proximal end 322 and the distal end 324 of the reinforcement structure 320.

[0061] The lack of coupling of the reinforcement structure 320 to the elongate member 132 can facilitate and improve the collapse of the elongate member 132 around a tool 400, also referred to herein as instrument 400 or device 400, inserted through the valve 104 as shown in **Figure 4**. The tool 400 can be any device inserted through the valve 104 including, for example, one or several additional catheters, lines, wires, grippers, punches, cutters, or the like. As seen in Figure 4, the tool 400 is inserted through the valve 104 and specifically through the elongate member 132 of the valve. As shown, the constricting mechanism 141 is in the first configuration and the elongate member 132 and the central lumen 138 of the elongate member 132 is collapsed around the tool 400, and specifically around a shaft 402 of the tool 400 to thereby seal the valve 104 around the tool 400 and specifically around the shaft 402 of the tool 400. The constricting mechanism 141 can seal around tools 400 that fit through the elongate member 132, regardless of the size of the tool 400. Thus, the valve can be used with a wide variety of tools.

[0062] The reinforcement structure 320 can comprise a variety of designs, shapes, sizes, and materials. In some embodiments, the reinforcement structure 320 can be sized and shaped so as to receive elongate member 132 and to be positioned between the elongate member 132 and the at least one filament 150. In some embodiments, the reinforcement structure 320 can be made from a material sufficiently strong to prevent the cutting of the at least one filament 150 through the elongate member 132.

[0063] In some embodiments, the reinforcement structure can comprise a coil or a mesh sheath. The mesh sheath can, in some embodiments, comprise a braided mesh. The braided mesh can be made from any desired number of wires in any desired configuration. In some embodiments, the braided mesh can comprise a 4 wire braided mesh, an 8 wire braided mesh, a 12 wire braided mesh, a 16 wire braided mesh, a 20 wire braided mesh, a 24 wire braided mesh, a 32 wire braided mesh, a 48 wire braided mesh, a 64 wire braided mesh, a 72 wire braided mesh, an 80 wire braided mesh, a 96 wire braided mesh, or any other or intermediate braided mesh. In some embodiments, the braided mesh can comprise: a 1x1 configuration. In some embodiments, the wire in the braided mesh can be any desired material including, for example, a metal wire such as a nitinol wire or a stainless steel wire, a polymer wire, or a natural wire. In one embodiment, the braided mesh can comprise a 48 wire mesh in a 1x1 configuration made with a nitinol wire having a diameter of 0.003 inches.

[0064] With reference now to **Figures 6** through **9**, different embodiments and/or configurations of the filament 150 are shown. The filament 150 can comprise a single filament 150 having a first end 600 and a second end 602 as shown in Figure 6. The filament 150, and specifically which first and second ends 600, 602 can be coupled to the actuator 142 to move the filament 150 between the first and second configurations or positions and/or from the first configuration or position to the second configuration or position. In some embodiments, both of the first end 600 and the second end 602 can be coupled to a single button 144, in some embodiments, each of the first end 600 and the second end 602 can be coupled to different buttons 144, and in some embodiments, one of the first end 600 and the second end 602 can be coupled to a button 144 and the other of the first end 600 and the second end 602 can be coupled to the housing 128 or other portion of the valve 104.

[0065] In some embodiments, the filament 150 can comprise multiple filaments, and specifically, as shown in Figures 7 through 9, the filament 150 can comprise a first filament 150-A and a second filament 150-B. In embodiments in which the filament 150 comprises multiple filaments, each of the multiple filaments can have a first end 700 and a second end 702. The first and second filaments 150-A, 150-B can be coupled to the actuator 142. In such embodiments, the first and second ends 700, 702 can be coupled to the actuator 142 to move the filaments 150-A, 150-B between the first and second configurations and/or from the first configuration to the second

configuration. In some embodiments, both of the first end 700 and the second end 702 of one or more of the multiple filaments 150 can be coupled to a single button 144, in some embodiments, each of the first end 700 and the second end 702 of one or more of the multiple filaments 150 can be coupled to different buttons 144, and in some embodiments, one of the first end 700 and the second end 702 of one or more of the multiple filaments 150 can be coupled to one button 144 and the other of the first end 700 and the second end 702 of those one or more filaments 150 can be coupled to the housing 128 or other portion of the valve 104.

[0066] The filament 150 can be arranged in a variety of configurations. In some embodiments, the filament 150 can be configured to form a single loop 604 that can extend around the elongate member 132 and/or through which the elongate member 132 can be received as shown in Figure 6, and in some embodiments, the filament 150 can be configured to form multiple loops, and specifically a first loop 704 and a second loop 706 as shown in Figure 7. The first and second loops 704, 706 can each receive the elongate member 132. In some embodiments, a diameter or size of the loop 604, or of the loops 704, 706 can decrease when the constricting mechanism 141 is moved from the second configuration to the first configuration.

[0067] In some embodiments, the filament 150 can be configured to form a bight 800, which bight 800 can be a single bight or multiple bights. As used herein, a "bight" refers to a U-shaped section between the two ends of the filament 150. As depicted in Figures 8 and 9, the bight 800 can comprise multiple bights, and specifically a first bight 800-A and a second bight 800-B. In some embodiments, the first bight 800-A can extend through the second bight 800-B such that the first and second bights 800-A, 800-B interlock, whereas in other embodiments, the first and second bights 800-A, 800-B can be non-interlocking. Similarly, in embodiments containing the filament 150 having multiple loops, one or several of the multiple loops can be interlocking.

[0068] In some embodiments, the bight 800, and specifically one or both of the first bight 800-A and the second bight 800-B can be formed around a portion of the elongate member 132 and/or can extend around a portion of the elongate member 132. Each bight 800 can define a partially enclosed receiving area 808 wherein the elongate member 132 can be received. Thus, the first bight 800-A can define a first receiving area 808-A and the second bight 800-B can define a second receiving area 808-B.

[0069] As seen in Figures 8 and 9, multiple bights, and specifically the first and the second bights 800-A, 800-B can be positioned and oriented such that the first bight 800-A has a first orientation or first direction as indicated by arrow 810, and the second bight has a second orientation or second direction as indicated by the arrow 812. In some embodiments, the first orientation is different from the second orientation such that the first and second receiving areas 808-A, 808-B overlap and define an encircled area 814, also referred to herein as a constricting area 814. The elongate member 132 can be received within the encircled area 814. In embodiments in which bights 800-A, 800-B overlap to define the encircled area 814, the movement of the constricting mechanism 141 to the first configuration can result in and/or include the first bight 800-A moving in the direction indicated by the arrow 810 and/or the second bight 800-B moving in the direction indicated by the arrow 812, which movement of the bights 800-A, 800-B decreases the size of the encircled area 814 and constricts, collapses, and/or seals the elongate member 132 extending through the encircled area 814.

[0070] The filament(s) 150 forming the bights 800 can each apply an arcuate line or narrow longitudinal zone of pressure to the elongate member 132. If the filament(s) are circular in cross-section, the zone of pressure can be very small, and can, in some embodiments, be less than the diameter or thickness of the filament. In some embodiments, the filaments have a diameter or width less than about 2.5mm, less than about 2mm, less than about 1.5mm, less than about 1.25mm, less than about 1mm, less than about 0.75mm, less than about 0.5mm, and/or less than about 0.25mm. In some embodiments, the filaments can have a diameter or width of between about 0.01mm and 2.5mm, between about 0.05mm and 2mm, between about 0.1mm and 1mm, and/or between about 0.125mm and 0.70mm. In some embodiments, the arcuate line or zone of pressure may form two opposing arcs and in other embodiments, the arcuate line of pressure may be a singular substantially circular line or zone that encircles the elongate member at least once. The longitudinal length of the of the line or zone of pressure may be very short compared to other valves known in the art. In some embodiments, the longitudinal length of the zone of pressure applied to the elongate member 132 by the filament(s) 150 may be less than about 2.0mm and in some embodiments less than about 0.5mm. In some embodiments, the filament(s) 150 can have any desired cross-sectional shape including, for example, a circular cross-section, a rectangular cross-section, an oval cross-section, a square cross-section, a polygonal cross-section, a triangular cross-section, or any other desired shape of cross-section.

[0071] With reference now to **Figure 10**, a flowchart illustrating one embodiment of a process 1000 for sealing a valve 104 and/or catheter 102 accessing a body of a patient is shown. The process 1000 can be performed using the valve 104 and/or the delivery system 100. The process 1000 begins at block 1002, wherein the delivery device 100, and specifically the catheter 102 of the delivery device 100 is inserted into the body of the patient. In some embodiments, this can include inserting the catheter 102 into a portion of the circulator system of the patient such as, for example, a blood vessel including an artery or a venous vessel. In some embodiments, the delivery device 100 can be inserted into the body of the patient directly through an aperture or incision in the patient, and in some embodiments, the delivery device 100 can be inserted into the body of the patient via another catheter or device. In some embodiments, the constricting mechanism 141 can be in the first configuration while the delivery device 100 and/or the catheter 102 is inserted into the patient's body.

[0072] After the delivery device 100 is inserted into the body of the patient, the process 1000 proceeds to block 1004, wherein the constricting mechanism 141 is moved from the first configuration to the second configuration. As described above, the central lumen 138 of the elongate member 132 is unsealed when the constricting mechanism 141 is in the second configuration. In some embodiments, the moving of the constricting mechanism 141 from the first configuration to the second configuration can include the manipulation of the actuator 142 and/or the control of the actuator 142, and specifically the depressing of the one or several buttons 144 to move the filament 150 from the first position to the second position to allow the expansion and opening of the central lumen 138 of the elongate member 132.

[0073] After the constricting mechanism 141 is moved from the first configuration to the second configuration, the process 1000 proceeds to block 1006, wherein the tool 400, and specifically the shaft 402 of the tool 400 is advanced through the delivery device 100 and specifically through the valve 104 until a first end of the tool reaches a desired position within the body of the patient. In some embodiments, a portion of the shaft 402 can be positioned within the central lumen 138 of the elongate member 132 after the advancing of the tool 400 through the delivery device 100. In some embodiments, after the tool 400 is advanced through the delivery device 100, the desired procedure can be performed with the tool.

[0074] After the tool 400 is advanced through the delivery device 100, or while the tool 400 is being advanced through the delivery device 100, the process 1000 proceeds to block 1008, wherein the constricting mechanism 141 is returned to the first configuration. In some embodiments, the returning of the constricting mechanism 141 to the first configuration can include the release of the one or several buttons 144 and/or the control of the actuator 142 to reconfigure the constricting mechanism 141 to the first configuration. In some embodiments, the return of the constricting mechanism 141 to the first configuration can result in the collapse and/or sealing of the elongate member 132 and specifically the central lumen 138 of the elongate member 132 around the tool 400 and specifically around the shaft 402 of the tool 400. The return of the constricting mechanism 141 to the first configuration, or the movement of the constricting mechanism 141 to the first configuration can include the decreasing of the size and/or diameter of one or several loops formed by the filament 150 and/or the movement of one or several bights 800 such as, for example, the movement of the first bight 800-A in the first direction indicated by arrow 810 and the movement of the second bight 800-B in the second direction indicated by arrow 812 to reduce the size of the constricting area 814. In some embodiments, after the constricting mechanism is returned to the first configuration, the desired procedure can be performed with the tool.

[0075] After the constricting mechanism is returned to the first configuration, the process 1000 proceeds to block 1010, wherein the tool 400, and specifically the shaft 402 of the tool 400 is retracted from the delivery device 100, and more specifically from the valve 104. In some embodiments, the valve 104 can remain sealed during the retracing of the tool 400 and/or the shaft 402 of the tool. In some embodiments, the valve 104 remains sealed during the retracting of the tool 400 and/or the retracting of the shaft 402 of the tool 400 as the constricting mechanism 141 can remain in the first configuration during the retracing of the tool 400 and/or the shaft 402 of the tool 400.

[0076] In some embodiments, the constricting mechanism 141 can be moved to the second configuration to allow the retraction of the tool 400 and/or the shaft 402 of the tool 400 from the valve 104, and the constricting mechanism 141 can be returned to the first configuration when the tool 400 and/or the shaft 402 of the tool 400 is removed from the valve 104. In some embodiments, the retraction of the tool 400 and/or shaft 402 of the tool 400 from the valve 104 can be performed with the constricting mechanism 141 left in the first configuration. In some embodiments, the

constricting mechanism 141 can be moved to the second configuration, and then returned to the first configuration via the manipulation and/or control of the actuator 142, which manipulation and/or control of the actuator 142 can include the depressing of the one or several buttons 144 to move the constricting mechanism 141 to the second configuration, and the release of the one or several buttons 144 to return the constricting mechanism 141 to the first configuration. In some embodiments, if the procedure is complete, the delivery device 100 can then be removed from the body of the patient, and any incision created for the procedure can be closed.

[0077] With reference now to Figure 11, a side view of one embodiment of a thrombectomy system 1100 including the delivery device 100 and a thrombus extraction device 1102 is shown. In some embodiments, the thrombectomy system 1100 can be used to access a blood vessel 1104 to treat and/or extract a thrombus 1106 from the blood vessel 1104. The thrombus extraction device 1102 can include a self-expanding coring element 206 and expandable cylindrical portion 208. In some embodiments, and as shown in Figure 11, the thrombus extraction device 1102 can be the tool 400 that can extend through the valve 104, and in some embodiments, the valve 104 can be a part of the thrombus extraction device 1102. Further details of thrombectomy systems, thrombus extraction devices, and methods of using the same are disclosed in: U.S. Application No. 15/268,296, filed September 16, 2016, and entitled "INTRAVASCULAR TREATMENT OF VASCULAR OCCLUSION AND ASSOCIATED DEVICES, SYSTEMS, AND METHODS"; U.S. Application No. 15/498,320, filed April 26, 2017, and entitled "DEVICES AND METHODS FOR TREATING VASCULAR OCCLUSION"; and U.S. Application No. 15/466,740, filed on March 22, 2017, and entitled "DEVICE AND METHOD FOR TREATING VASCULAR OCCLUSION", the entirety of each of which is hereby incorporated by reference herein.

[0078] With reference now to Figure 12, a side-section view of another embodiment of the hemostasis valve 104 having two piece caps 116, 120 is shown. The valve 104 can include a housing 128 defining an interior channel 130 through which the tubular member 132 can extend. The valve 104 can include the proximal cap 116 and the distal cap 120. In some embodiments, the proximal cap 116 can comprise a two piece cap and can include a proximal exterior member 1200 and a proximal channel member 1202. In some embodiments, the distal cap 120 can comprise a two-piece cap and can include a distal exterior member 1204 and a distal channel member 1206. In some embodiments, this coupling between the proximal exterior member 1200 and the proximal

channel member 1202 and/or the coupling between the distal exterior member 1204 and the distal channel member 1206 can be a sealed coupling so as to prevent the leakage of material including fluid or gas between the respective ones of the proximal exterior member 1200 and the proximal channel member 1202 and/or the distal exterior member 1204 and the distal channel member 1206. In some embodiments, this sealing coupling can be achieved and/or maintained via a seal such as an O-ring 1208 that can be positioned between the proximal exterior member 1200 and the proximal channel member 1202 and/or between the distal exterior member 1204 and the distal channel member 1206.

[0079] In some embodiments, the proximal exterior member 1200 can be coupled, and in some embodiments, rotatingly coupled to the proximal channel member 1202 in a manner to allow the rotation of the proximal exterior member 1200 without rotating the proximal channel member 1202. Similarly, in some embodiments, the distal exterior member 1204 can be rotatingly coupled to the distal channel member 1206 in a manner to allow the rotation of the distal exterior member 1204 without the rotating of the distal channel member 1206. In some such embodiments, the channel members 1202, 1206 can be non-rotatable with respect to the housing 128 and/or the tubular member 132, and one or both of the exterior members 1200, 1204 can be rotatable with respect to the housing 128 and/or the tubular member 132. In such an embodiment, the maintaining of the rotational position of the channel members 1202, 1206 with respect to the housing 128 and/or the tubular member 132 can prevent the twisting of the tubular member 132 which can result in the sealing of the tubular member 132 regardless of the configuration of the constructing mechanism 141.

[0080] The exterior members 1200, 1204 can comprise a variety of shapes and sizes and can include a variety of features. In some embodiments, one or both of the exterior members 1200, 1204 can be coupled to, for example, a shaft similar to the shaft 106 shown in figure 1. In some embodiments, for example, the distal exterior member 1204 can be coupled to a shaft 106, including, for example, can be non-detachably coupled to the shaft 106. In some embodiments, one or both of the exterior members can include one or several features configured to facilitate coupling with the valve 104. These one or several features can include, for example, one or several male or female: connectors; couplers; attachment mechanisms; or the like. In some embodiments, these one or several features can facilitate use of the valve with other existing components, instruments, tools,

or the like. In some embodiments, for example, one or both of the exterior members 1200, 1204 can comprise either a male or female luer fitting, and specifically as shown in Figure 12, the distal exterior member 1204 can comprise a male luer fitting 1210.

[0081] Several aspects of the present technology are set forth in the following examples.

1. A hemostatic valve for sealing a medical device, the hemostatic valve comprising:

an elongate member having a first end, a second end, and a central lumen extending therebetween, wherein the elongate member is pliable;

a reinforcement structure extending along at least a portion of the elongate member, wherein the reinforcement structure is coupled to the elongate member; and

an active tensioning mechanism coupled to the elongate member, wherein the tensioning mechanism is moveable between a first configuration wherein the central lumen is constricted and sealed and a second configuration wherein the central lumen is open.

2. The hemostatic valve of example 1, wherein the elongate member comprises a compliant polymer tube.

3. The hemostatic valve of example 1 or 2, wherein the tensioning mechanism comprises at least one filament extending at least partially around the elongate member.

4. The hemostatic valve of example 3, wherein the reinforcement structure is positioned between the at least one filament and the elongate member.

5. The hemostatic valve of example 4, wherein the reinforcement structure comprises a braided mesh.

6. The hemostatic valve of example 4 or 5, wherein the reinforcement structure is coupled to the elongate member at a position proximate to the first end of the elongate member and at a position proximate to the second end of the elongate member.

7. The hemostatic valve of example 6, wherein the reinforcement structure is not coupled to the elongate member at a position between the first end of the elongate member and the second end of the elongate member.

8. The hemostatic valve of any one of examples 3–7, wherein the tensioning mechanism comprises an actuator coupled to the at least one filament, wherein the actuator is moveable to control movement of the at least one filament from a first position wherein the central lumen is constricted and sealed to a second position wherein the central lumen is open, wherein the at least one filament is in the first position when the tensioning mechanism is in the first configuration.

9. The hemostatic valve of example 8, wherein the actuator is biased towards the first position.

10. The hemostatic valve of example 8 or 9, wherein the actuator is biased toward the second position.

11. The hemostatic valve of any one of examples 8–10, wherein the actuator comprises a manual actuator.

12. The hemostatic valve of any one of examples 8–11, wherein the at least one filament forms a loop around the elongate member.

13. The hemostatic valve of any one of examples 8–12, wherein the at least one filament forms a bight around a portion of the elongate member.

14. The hemostatic valve of any one of examples 8–13, wherein the at least one filament comprises a first filament and a second filament, wherein each of the first filament and the second filament are coupled to the actuator, and wherein the first filament and the second filament are moveable from the first position to the second position.

15. The hemostatic valve of example 14, wherein each of the first filament and the second filament form a loop around the elongate member.

16. The hemostatic valve of example 14 or 15, wherein the first filament forms a first bight around a first portion of the elongate member, and wherein the second filament forms a second bight around a second portion of the elongate member.

17. The hemostatic valve of example 16, wherein the first bight extends through the second bight.

18. The hemostatic valve of any one of examples 1–17, further comprising a shell defining a first aperture and a second aperture, wherein the elongate member extends from the first aperture to the second aperture and fluidly couples the first aperture and the second aperture.

19. The hemostatic valve of any one of examples 1–18, wherein the tensioning mechanism is self-adjustable to seal around tools of different sizes extending through the hemostatic valve.

20. The hemostatic valve of any one of examples 1–19, wherein the central lumen comprises a single lumen.

21. The hemostatic valve of any one of examples 1–20, wherein the central lumen comprises a plurality of lumens.

22. A delivery system for intravascular access of a blood vessel within a patient's body, the delivery system comprising:

a catheter having a first end, a second end, and a catheter lumen extending therebetween;

a hemostatic valve coupled to the first end of the catheter, the hemostatic valve comprising:

a tubular member having a first end, a second end, and a central lumen extending therebetween, wherein the central lumen of the tubular member is fluidly coupled with the catheter lumen; and

an active tensioning mechanism coupled to the tubular member, the tensioning mechanism moveable between a first configuration wherein the tensioning mechanism constricts on the central lumen and the central lumen is sealed and a second configuration wherein the central lumen is open.

23. The delivery system of example 22, wherein the hemostatic valve further comprises a reinforcement structure extending along at least a portion of the tubular member.

24. The delivery system of example 22 or 23, wherein the reinforcement structure is located between the tensioning mechanism and the tubular member.

25. The delivery system of example 24, wherein the reinforcement structure comprises a braided mesh.

26. The delivery system of example 24 or 25, wherein the reinforcement structure is coupled to the tubular member at a position proximate to the first end of the tubular member and at a position proximate to the second end of the tubular member.

27. The delivery system of example 26, wherein the reinforcement structure is adhered to the tubular member at the first end of the tubular member and at the second end of the tubular member.

28. The delivery system of example 27, wherein the reinforcement structure is uncoupled to the tubular member between the first end of the tubular member and the second end of the tubular member.

29. The delivery system of any one of examples 22–28, wherein the tensioning mechanism comprises at least one filament extending at least partially around the tubular member.

30. The delivery system of example 29, wherein the tensioning mechanism comprises an actuator coupled to the at least one filament, wherein moving the tensioning mechanism from the first configuration to the second configuration comprises moving the actuator and the thereto coupled at least one filament from a first position to a second position, wherein the filament constricts and seals the central lumen of the tubular member when the filament is in the first position.

31. The delivery system of example 30, wherein the actuator comprises a manual actuator.

32. The delivery system of example 31, wherein the actuator comprises a pair of opposing and depressable buttons, wherein the buttons are biased towards an undepressed position.

33. The delivery system of example 31 or 32, wherein the central lumen is sealed when the buttons are in the undepressed position.

34. The delivery system of any one of examples 30–33, wherein the filament comprises a monofilament.

35. The delivery system of any one of examples 30–34, wherein the filament comprises at least one of: a polymer filament; or a metallic filament.

36. The delivery system of any one of examples 22–35, wherein the catheter comprises a thrombus extraction device.

37. A method of sealing a delivery device accessing a blood vessel of a patient, the method comprising:

inserting the delivery device comprising a catheter and a hemostatic valve into the blood vessel of the patient, the catheter having a first end, a second end, and a catheter lumen extending therethrough, and the hemostatic valve coupled to the first end and having a tubular member defining a central lumen fluidly coupled with the catheter

lumen and a tensioning mechanism coupled with the tubular member, wherein the tensioning mechanism collapses and seals the central lumen in a first configuration and thereby seals access to the blood vessel;

moving the tensioning mechanism of the hemostatic valve to a second configuration, wherein the central lumen is open and access to the blood vessel is unsealed when the tensioning mechanism is in the second configuration;

advancing a shaft of a tool through the delivery device until a first end of the tool reaches a desired position within the blood vessel of the patient and a portion of the shaft is positioned within the central lumen of the tubular member; and

returning the tensioning mechanism of the hemostatic valve to the first configuration such that the tubular member collapses on the shaft of the tool and seals around the shaft of the tool.

38. The method of example 37, further comprising retracting the shaft of the tool from the delivery device.

39. The method of example 38, wherein the tensioning mechanism is maintained in the first configuration during and after the retracting of the shaft of the tool from the delivery device.

40. The method of example 38 or 39, wherein the tensioning mechanism is moved to the second configuration during the retracting of the shaft of the tool from the delivery device, and wherein the tensioning mechanism is returned to the first configuration after the shaft of the tool is retracted from the delivery device.

41. The method of any one of examples 37–40, wherein the tensioning mechanism comprises at least one filament extending at least partially around the tubular member, wherein the at least one filament collapses the tubular member when the tensioning mechanism is in the first configuration.

42. The method of example 41, wherein the at least one filament circumferentially constricts the tubular member to collapse the tubular member when the tensioning mechanism is in the first configuration.

43. The method of example 41 or 42, wherein the hemostatic valve comprises a reinforcement structure located between the at least one filament and the tubular member.

44. The method of any one of examples 41–43, wherein the at least one filament forms a loop around the elongate member, and wherein moving the tensioning mechanism from the second configuration to the first configuration reduces a size of the loop to thereby constrict the tubular member within the loop.

45. The method of any one of examples 41–44, wherein the filament forms at least one bight around a portion of the elongate member.

46. The method of example 45, wherein the filament comprises a first filament and a second filament, and wherein the at least one bight comprises a first bight oriented in a first direction and formed by the first filament and a second bight oriented in a second direction and formed by the second filament, wherein the first and second bights overlap to encircle a portion of the tubular member within an constricting area.

47. The method of example 46, wherein moving the tensioning mechanism from the second configuration to the first configuration comprises moving the first bight in the first direction and the second bight in the direction to reduce the size of the constricting area and collapse and seal the central lumen of the tubular member.

48. The method of any one of examples 37–47, wherein the tensioning mechanism comprises an actuator, and wherein moving the tensioning mechanism to the second configuration comprises manipulating the actuator.

49. The method of any one of examples 37–48, further comprising applying a vacuum to the delivery device to aspirate material through the catheter, wherein the central lumen remains sealed during the aspiration.

50. The method of any one of examples 37–49, wherein the tool comprises a thrombus extraction device.

51. A hemostatic valve for sealing a medical device, the hemostatic valve comprising:

an elongate member having a first end, a second end, and a central lumen comprising a plurality of lumens extending therebetween, wherein the elongate member is pliable; and

an active tensioning mechanism coupled to the elongate member, wherein the tensioning mechanism is moveable between a first configuration wherein the central lumen is constricted and sealed and a second configuration wherein the central lumen is open.

[0082] Other variations are within the spirit of the present invention. Thus, while the invention is susceptible to various modifications and alternative constructions, certain illustrated embodiments thereof are shown in the drawings and have been described above in detail. It should be understood, however, that there is no intention to limit the invention to the specific form or forms disclosed, but on the contrary, the intention is to cover all modifications, alternative constructions, and equivalents falling within the spirit and scope of the invention, as defined in the appended claims.

[0083] In the previous description, various embodiments of the present invention are described. For purposes of explanation, specific configurations and details are set forth in order to provide a thorough understanding of the embodiments. However, it will also be apparent to one skilled in the art that the present invention may be practiced without the specific details. Furthermore, well-known features may be omitted or simplified in order not to obscure the embodiment being described.

[0084] The use of the terms “a” and “an” and “the” and similar referents in the context of describing the invention (especially in the context of the following claims) are to be construed to cover both the singular and the plural, unless otherwise indicated herein or clearly contradicted by

context. The terms "comprising," "having," "including," and "containing" are to be construed as open-ended terms (i.e., meaning "including, but not limited to,") unless otherwise noted. The term "connected" is to be construed as partly or wholly contained within, attached to, or joined together, even if there is something intervening. Recitation of ranges of values herein are merely intended to serve as a shorthand method of referring individually to each separate value falling within the range, unless otherwise indicated herein, and each separate value is incorporated into the specification as if it were individually recited herein. All methods described herein can be performed in any suitable order unless otherwise indicated herein or otherwise clearly contradicted by context. The use of any and all examples, or exemplary language (e.g., "such as") provided herein, is intended merely to better illuminate embodiments of the invention and does not pose a limitation on the scope of the invention unless otherwise claimed. No language in the specification should be construed as indicating any non-claimed element as essential to the practice of the invention.

[0085] Preferred embodiments of this invention are described herein, including the best mode known to the inventors for carrying out the invention. Variations of those preferred embodiments may become apparent to those of ordinary skill in the art upon reading the foregoing description. The inventors expect skilled artisans to employ such variations as appropriate, and the inventors intend for the invention to be practiced otherwise than as specifically described herein. Accordingly, this invention includes all modifications and equivalents of the subject matter recited in the claims appended hereto as permitted by applicable law. Moreover, any combination of the above-described elements in all possible variations thereof is encompassed by the invention unless otherwise indicated herein or otherwise clearly contradicted by context.

[0086] All references, including publications, patent applications, and patents, cited herein are hereby incorporated by reference to the same extent as if each reference were individually and specifically indicated to be incorporated by reference and were set forth in its entirety herein.

WHAT IS CLAIMED IS:

1. A hemostatic valve for sealing a medical device, the hemostatic valve comprising:

an elongate member having a first end, a second end, and a central lumen extending therebetween, wherein the elongate member is pliable;

a reinforcement structure extending along at least a portion of the elongate member, wherein the reinforcement structure is coupled to the elongate member; and

an active tensioning mechanism coupled to the elongate member, wherein the tensioning mechanism is moveable between a first configuration wherein the central lumen is constricted and sealed and a second configuration wherein the central lumen is open.

2. The hemostatic valve of claim 1, wherein the elongate member comprises a compliant polymer tube.

3. The hemostatic valve of claim 1, wherein the tensioning mechanism comprises at least one filament extending at least partially around the elongate member.

4. The hemostatic valve of claim 3, wherein the reinforcement structure is positioned between the at least one filament and the elongate member.

5. The hemostatic valve of claim 4, wherein the reinforcement structure comprises a braided mesh.

6. The hemostatic valve of claim 4, wherein the reinforcement structure is coupled to the elongate member at a position proximate to the first end of the elongate member and at a position proximate to the second end of the elongate member.

7. The hemostatic valve of claim 6, wherein the reinforcement structure is not coupled to the elongate member at a position between the first end of the elongate member and the second end of the elongate member.

8. The hemostatic valve of claim 3, wherein the tensioning mechanism comprises an actuator coupled to the at least one filament, wherein the actuator is moveable to control movement of the at least one filament from a first position wherein the central lumen is constricted and sealed to a second position wherein the central lumen is open, wherein the at least one filament is in the first position when the tensioning mechanism is in the first configuration.

9. The hemostatic valve of claim 8, wherein the actuator is biased towards the first position.

10. The hemostatic valve of claim 8, wherein the actuator is biased toward the second position.

11. The hemostatic valve of claim 8, wherein the actuator comprises a manual actuator.

12. The hemostatic valve of claim 8, wherein the at least one filament forms a loop around the elongate member.

13. The hemostatic valve of claim 8, wherein the at least one filament forms a bight around a portion of the elongate member.

14. The hemostatic valve of claim 8, wherein the at least one filament comprises a first filament and a second filament, wherein each of the first filament and the second filament are coupled to the actuator, and wherein the first filament and the second filament are moveable from the first position to the second position.

15. The hemostatic valve of claim 14, wherein each of the first filament and the second filament form a loop around the elongate member.

16. The hemostatic valve of claim 14, wherein the first filament forms a first bight around a first portion of the elongate member, and wherein the second filament forms a second bight around a second portion of the elongate member.

17. The hemostatic valve of claim 16, wherein the first bight extends through the second bight.

18. The hemostatic valve of claim 1, further comprising a shell defining a first aperture and a second aperture, wherein the elongate member extends from the first aperture to the second aperture and fluidly couples the first aperture and the second aperture.

19. The hemostatic valve of claim 1, wherein the tensioning mechanism is self-adjustable to seal around tools of different sizes extending through the hemostatic valve.

20. The hemostatic valve of claim 1, wherein the central lumen comprises a single lumen.

21. The hemostatic valve of claim 1, wherein the central lumen comprises a plurality of lumens.

22. A delivery system for intravascular access of a blood vessel within a patient's body, the delivery system comprising:

a catheter having a first end, a second end, and a catheter lumen extending therebetween;

a hemostatic valve coupled to the first end of the catheter, the hemostatic valve comprising:

a tubular member having a first end, a second end, and a central lumen extending therebetween, wherein the central lumen of the tubular member is fluidly coupled with the catheter lumen; and

an active tensioning mechanism coupled to the tubular member, the tensioning mechanism moveable between a first configuration wherein the tensioning mechanism constricts on the central lumen and the central lumen is sealed and a second configuration wherein the central lumen is open.

23. The delivery system of claim 22, wherein the hemostatic valve further comprises a reinforcement structure extending along at least a portion of the tubular member.

24. The delivery system of claim 23, wherein the reinforcement structure is located between the tensioning mechanism and the tubular member.

25. The delivery system of claim 24, wherein the reinforcement structure comprises a braided mesh.

26. The delivery system of claim 24, wherein the reinforcement structure is coupled to the tubular member at a position proximate to the first end of the tubular member and at a position proximate to the second end of the tubular member.

27. The delivery system of claim 26, wherein the reinforcement structure is adhered to the tubular member at the first end of the tubular member and at the second end of the tubular member.

28. The delivery system of claim 27, wherein the reinforcement structure is uncoupled to the tubular member between the first end of the tubular member and the second end of the tubular member.

29. The delivery system of claim 22, wherein the tensioning mechanism comprises at least one filament extending at least partially around the tubular member.

30. The delivery system of claim 29, wherein the tensioning mechanism comprises an actuator coupled to the at least one filament, wherein moving the tensioning mechanism from the first configuration to the second configuration comprises moving the actuator and the thereto coupled at least one filament from a first position to a second position, wherein the filament constricts and seals the central lumen of the tubular member when the filament is in the first position.

31. The delivery system of claim 30, wherein the actuator comprises a manual actuator.

32. The delivery system of claim 31, wherein the actuator comprises a pair of opposing and depressable buttons, wherein the buttons are biased towards an undepressed position.

33. The delivery system of claim 31, wherein the central lumen is sealed when the buttons are in the undepressed position.

34. The delivery system of claim 30, wherein the filament comprises a monofilament.

35. The delivery system of claim 30, wherein the filament comprises at least one of: a polymer filament; or a metallic filament.

36. The delivery system of claim 22, wherein the catheter comprises a thrombus extraction device.

37. A method of sealing a delivery device accessing a blood vessel of a patient, the method comprising:

inserting the delivery device comprising a catheter and a hemostatic valve into the blood vessel of the patient, the catheter having a first end, a second end, and a catheter lumen extending therethrough, and the hemostatic valve coupled to the first end and having a tubular member defining a central lumen fluidly coupled with the catheter lumen and a tensioning mechanism coupled with the tubular member, wherein the tensioning mechanism collapses and seals the central lumen in a first configuration and thereby seals access to the blood vessel;

moving the tensioning mechanism of the hemostatic valve to a second configuration, wherein the central lumen is open and access to the blood vessel is unsealed when the tensioning mechanism is in the second configuration;

advancing a shaft of a tool through the delivery device until a first end of the tool reaches a desired position within the blood vessel of the patient and a portion of the shaft is positioned within the central lumen of the tubular member; and

returning the tensioning mechanism of the hemostatic valve to the first configuration such that the tubular member collapses on the shaft of the tool and seals around the shaft of the tool.

38. The method of claim 37, further comprising retracting the shaft of the tool from the delivery device.

39. The method of claim 38, wherein the tensioning mechanism is maintained in the first configuration during and after the retracting of the shaft of the tool from the delivery device.

40. The method of claim 38, wherein the tensioning mechanism is moved to the second configuration during the retracting of the shaft of the tool from the delivery device, and wherein the tensioning mechanism is returned to the first configuration after the shaft of the tool is retracted from the delivery device.

41. The method of claim 37, wherein the tensioning mechanism comprises at least one filament extending at least partially around the tubular member, wherein the at least one filament collapses the tubular member when the tensioning mechanism is in the first configuration.

42. The method of claim 41, wherein the at least one filament circumferentially constricts the tubular member to collapse the tubular member when the tensioning mechanism is in the first configuration.

43. The method of claim 41, wherein the hemostatic valve comprises a reinforcement structure located between the at least one filament and the tubular member.

44. The method of claim 41, wherein the at least one filament forms a loop around the elongate member, and wherein moving the tensioning mechanism from the second configuration to the first configuration reduces a size of the loop to thereby constrict the tubular member within the loop.

45. The method of claim 41, wherein the filament forms at least one bight around a portion of the elongate member.

46. The method of claim 45, wherein the filament comprises a first filament and a second filament, and wherein the at least one bight comprises a first bight oriented in a first direction and formed by the first filament and a second bight oriented in a second direction and formed by the second filament, wherein the first and second bights overlap to encircle a portion of the tubular member within a constricting area.

47. The method of claim 46, wherein moving the tensioning mechanism from the second configuration to the first configuration comprises moving the first bight in the first direction and the second bight in the direction to reduce the size of the constricting area and collapse and seal the central lumen of the tubular member.

48. The method of claim 37, wherein the tensioning mechanism comprises an actuator, and wherein moving the tensioning mechanism to the second configuration comprises manipulating the actuator.

49. The method of claim 37, further comprising applying a vacuum to the delivery device to aspirate material through the catheter, wherein the central lumen remains sealed during the aspiration.

50. The method of claim 37, wherein the tool comprises a thrombus extraction device.

51. A hemostatic valve for sealing a medical device, the hemostatic valve comprising:

an elongate member having a first end, a second end, and a central lumen comprising a plurality of lumens extending therebetween, wherein the elongate member is pliable; and

an active tensioning mechanism coupled to the elongate member, wherein the tensioning mechanism is moveable between a first configuration wherein the central lumen is constricted and sealed and a second configuration wherein the central lumen is open.

ABSTRACT OF THE DISCLOSURE

Devices, systems, and methods for sealing medical devices, particularly during intravascular access, are disclosed herein. Some aspects relate to a hemostatic valve for sealing a wide range of medical devices, such as catheters, wires, embolectomy systems. The valve can include an elongate member having a first end, a second end, and a central lumen extending therebetween. A reinforcement structure extends along at least a portion of the elongate member and is coupled to the elongate member. A shell defining a first aperture and a second aperture may be included, which first and second apertures can be fluidly coupled by the elongate member. A tensioning mechanism is coupled to the shell and to the elongate member, the tensioning mechanism can be moveable between a first configuration wherein the tensioning mechanism is collapsed and the central lumen is sealed and a second configuration wherein the central lumen is open.

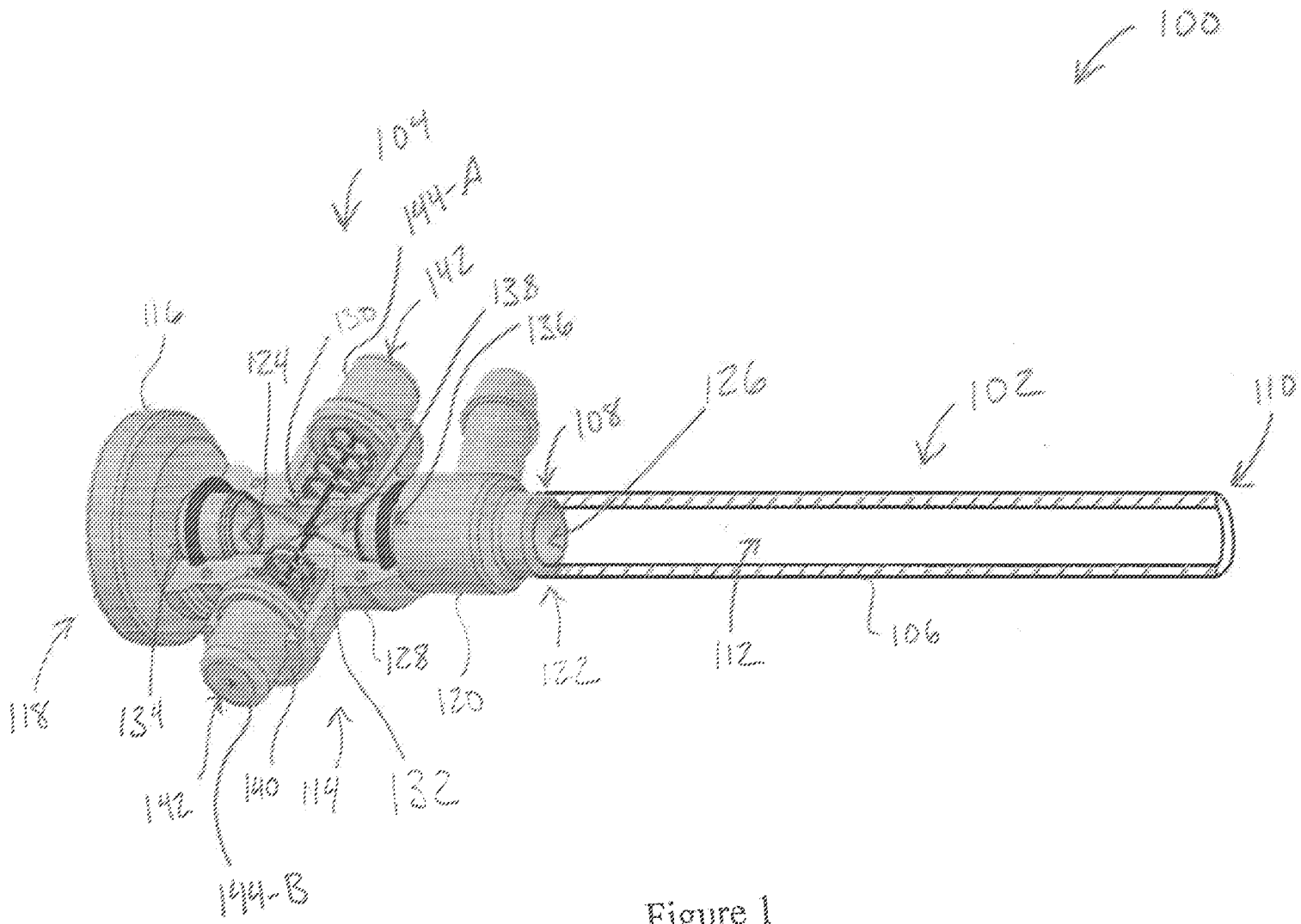
100
104
144-A
142
138
136
130
124
116
126
108
102
110
118
134
142
140
114
132
128
120
122
112
106
144-B

Figure 1

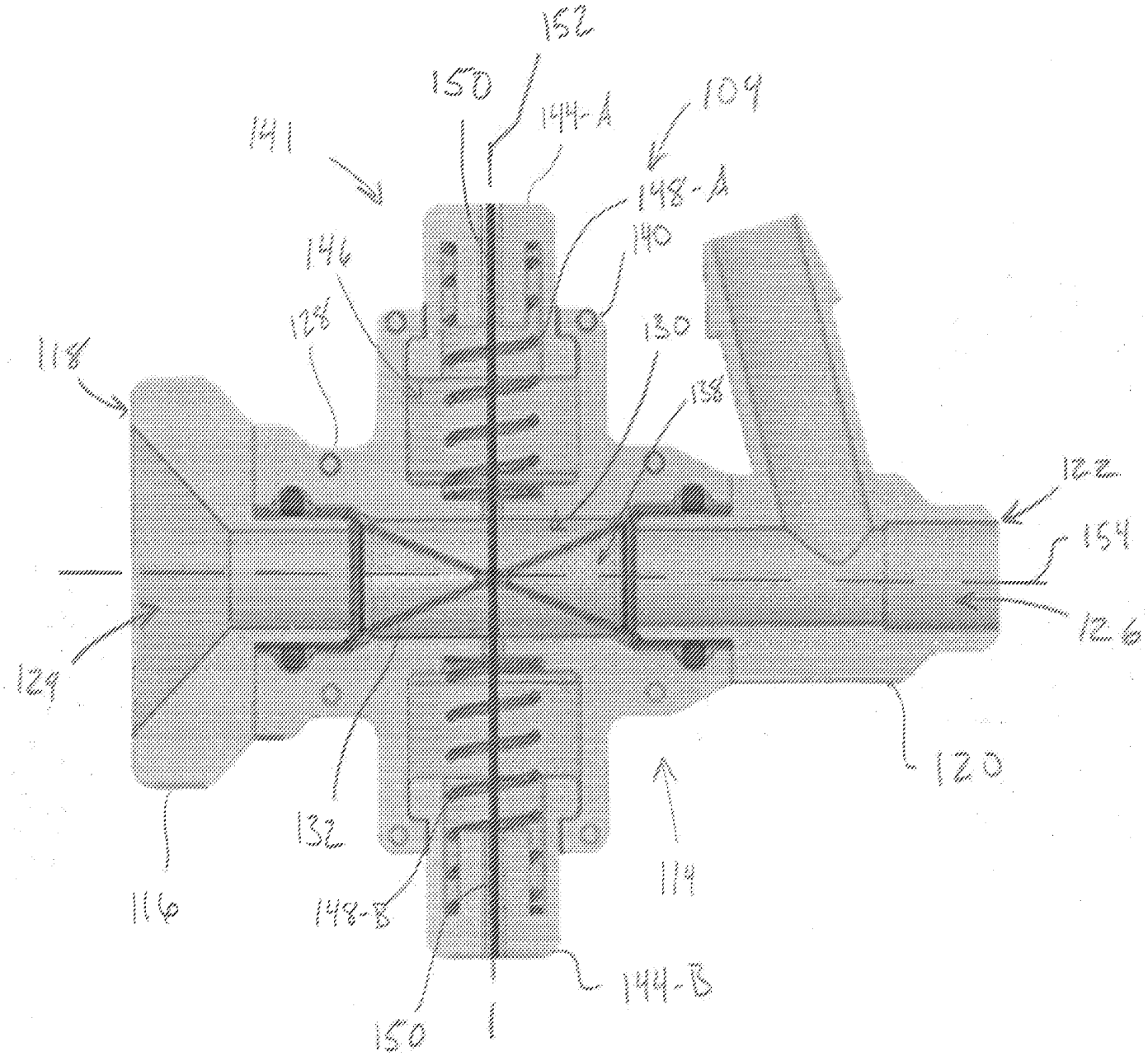
152
150
144-A
109
141
148-A
140
146
128
130
118
158
122
154
126
129
120
132
119
116
148-B
144-B
150

Figure 2

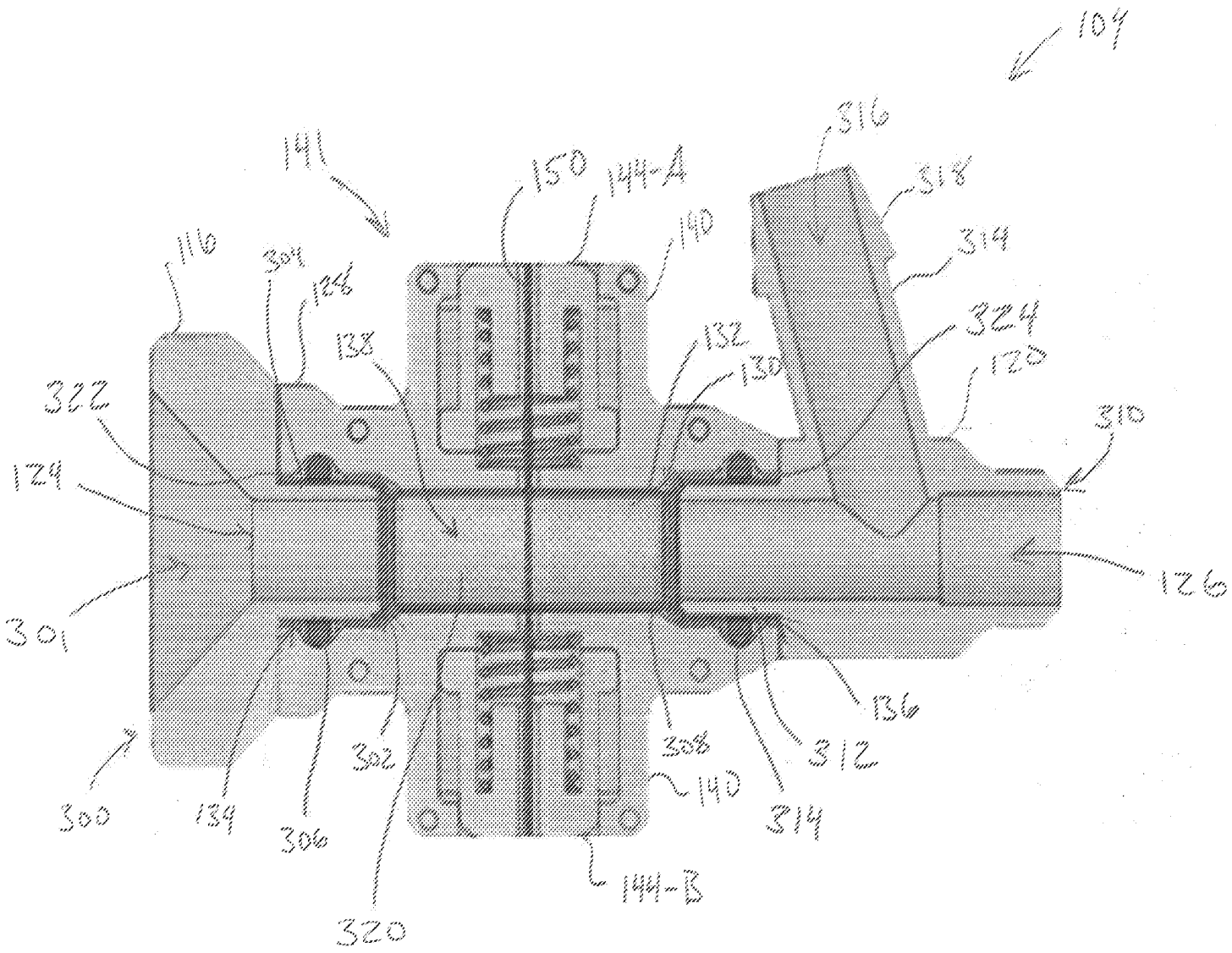
104
141
150
144-A
140
316
318
314
324
120
310
126
116
304
124
134
132
130
322
124
301
300
134
306
302
320
308
140
144-B
314
312
136

Figure 3

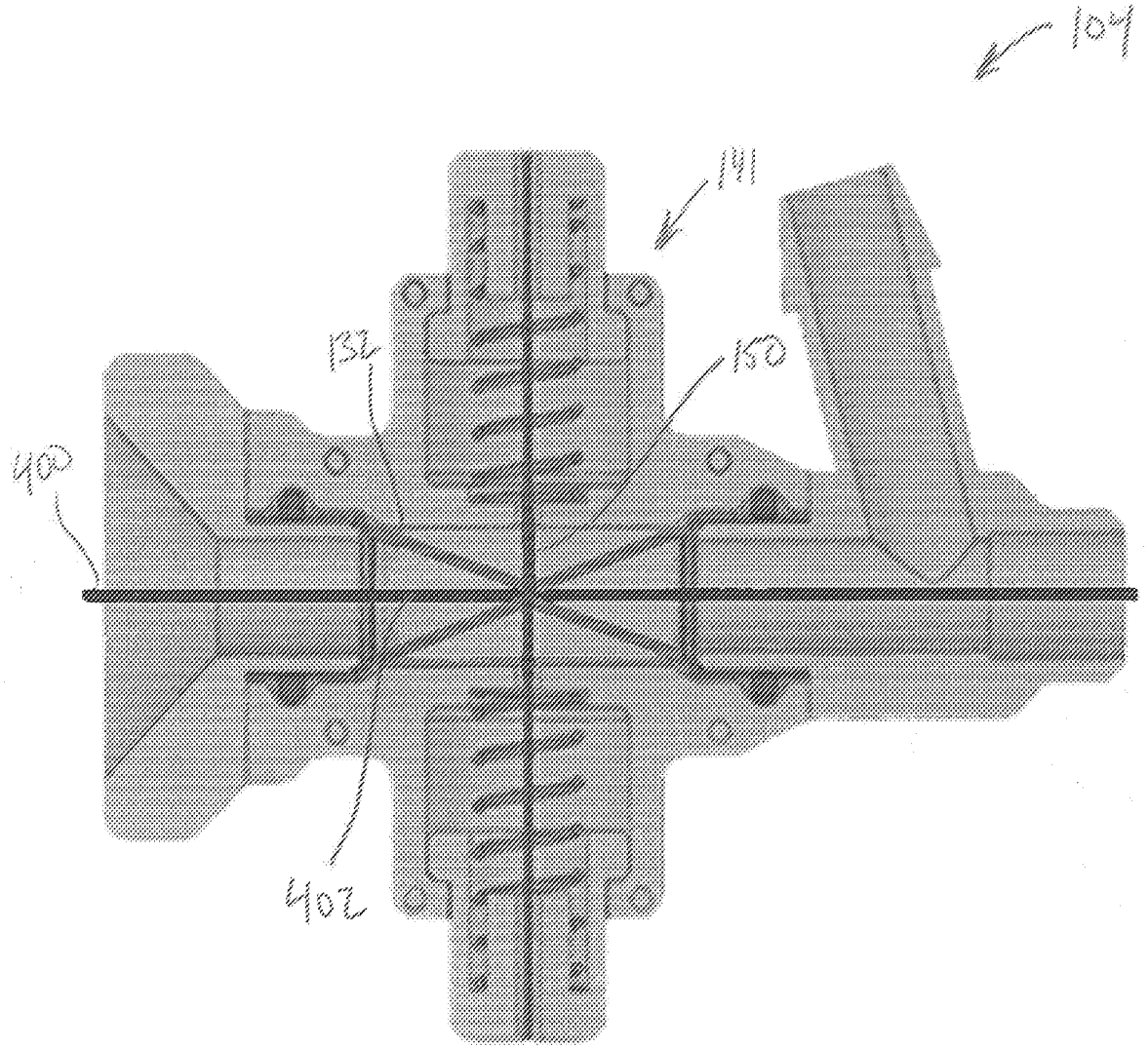

Figure 4

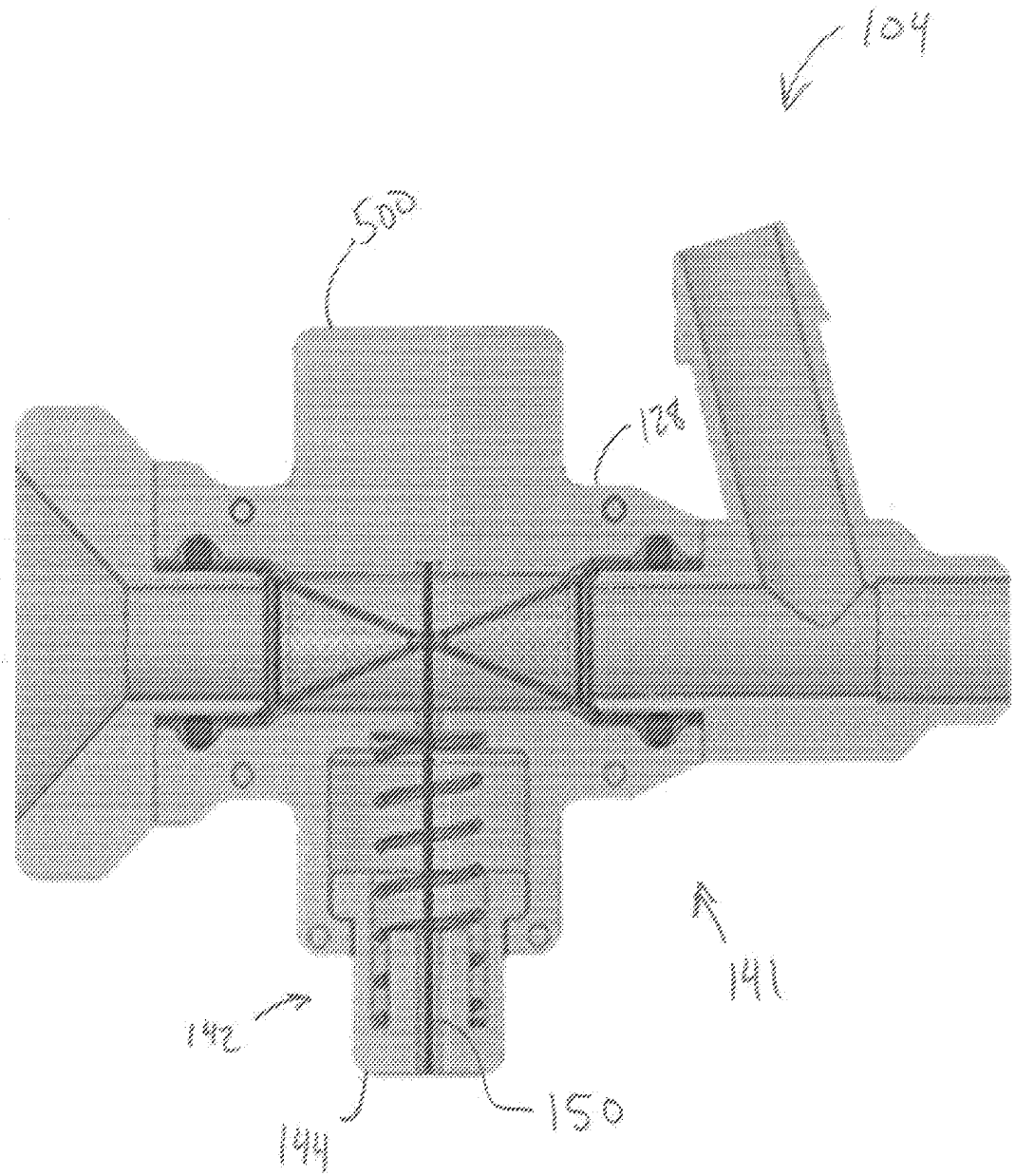

Figure 5

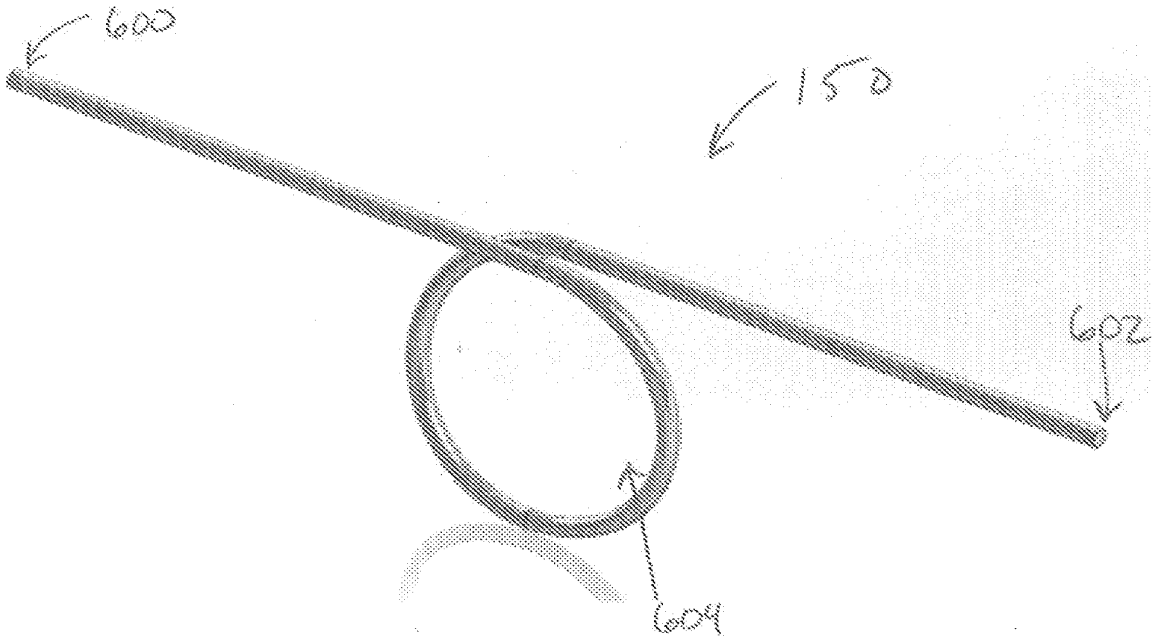

Figure 6

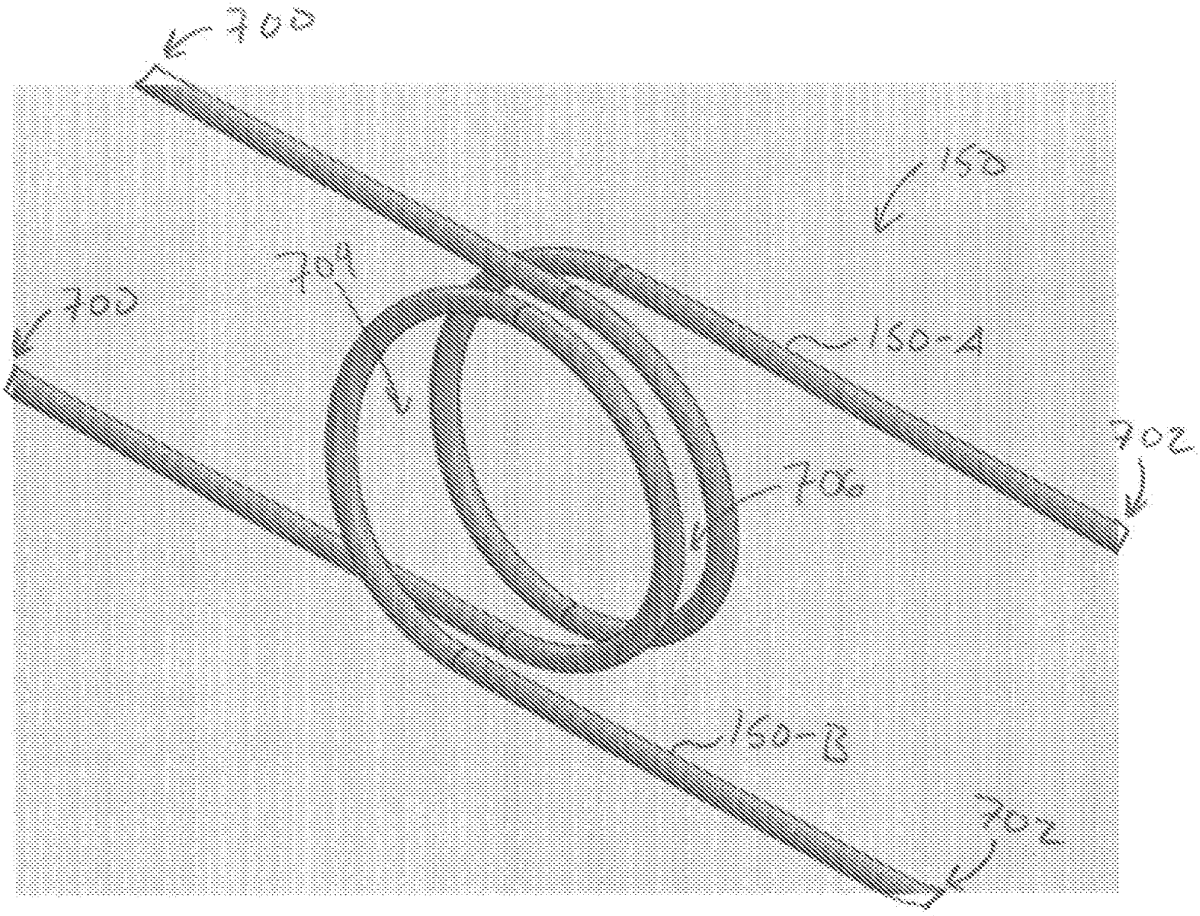

Figure 7

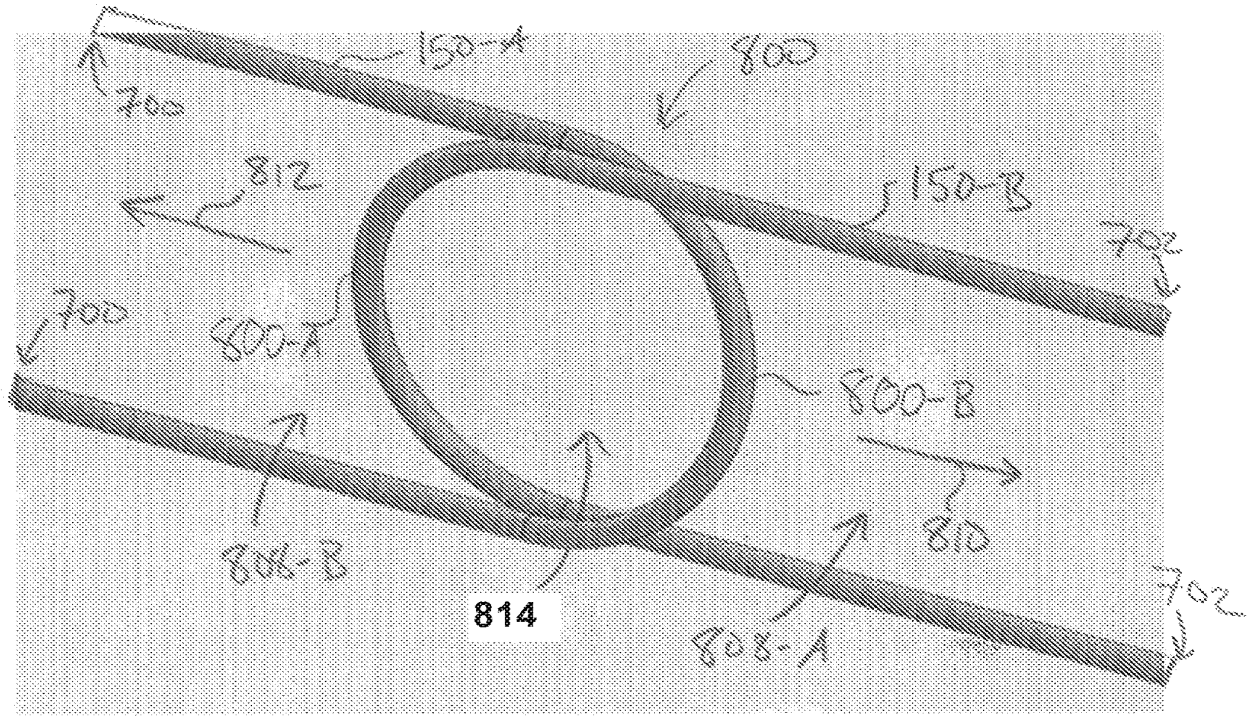

Figure 8

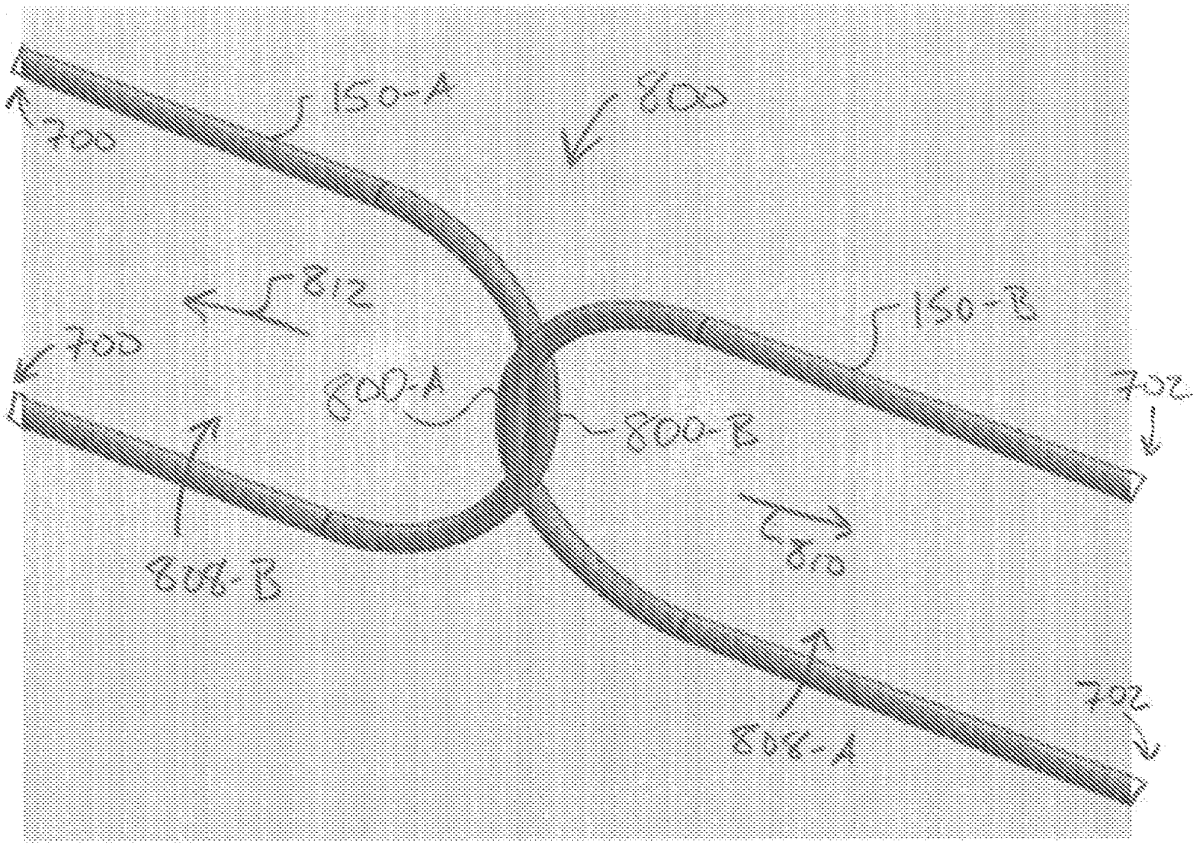

Figure 9

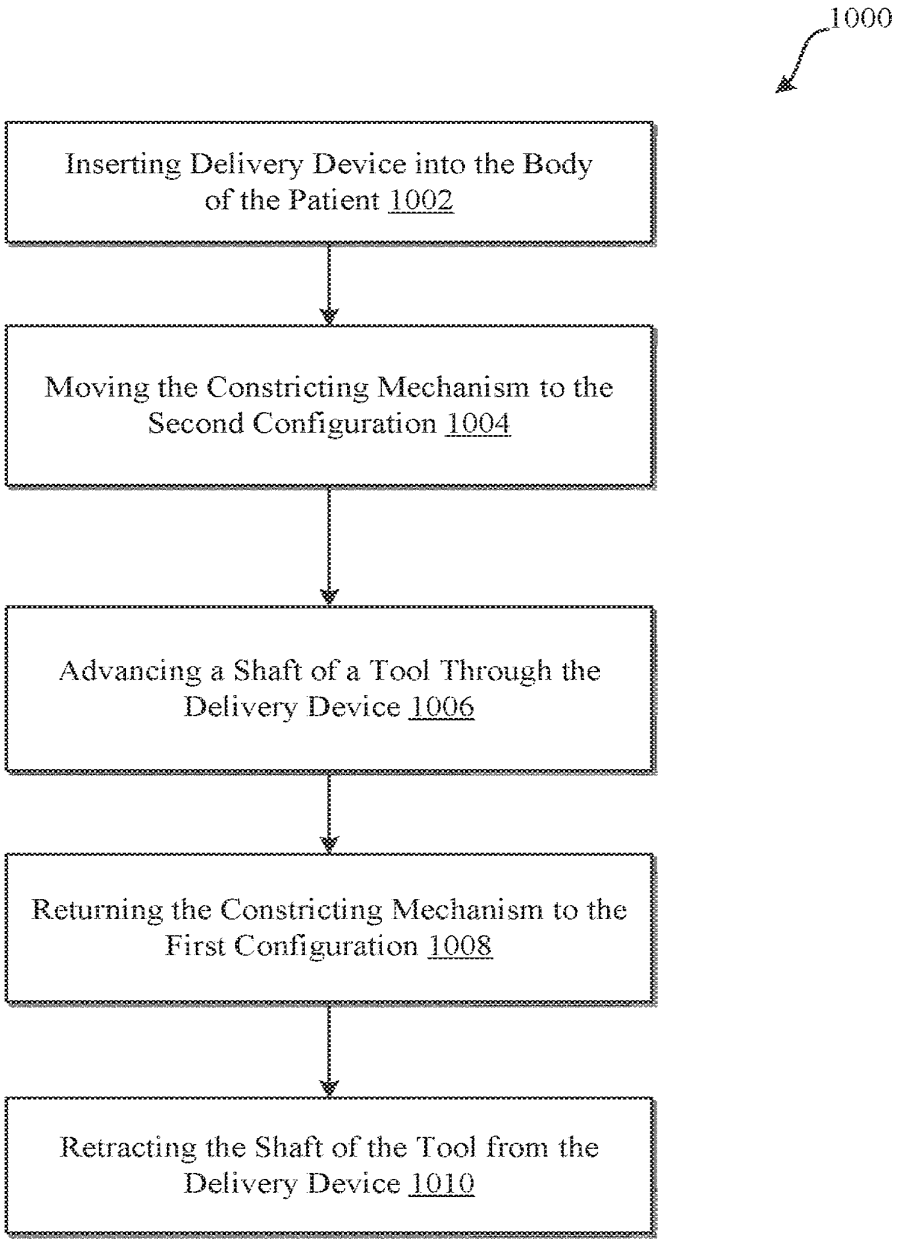
1000
Inserting Delivery Device into the Body of the Patient 1002
Moving the Constricting Mechanism to the Second Configuration 1004
Advancing a Shaft of a Tool Through the Delivery Device 1006
Returning the Constricting Mechanism to the First Configuration 1008
Retracting the Shaft of the Tool from the Delivery Device 1010

Figure 10

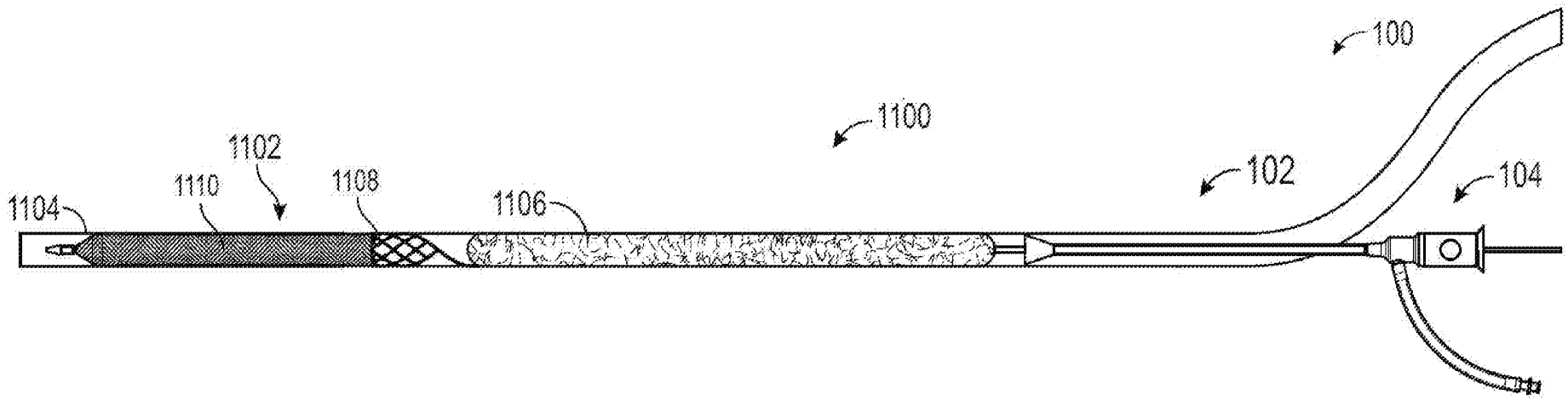

Figure 11

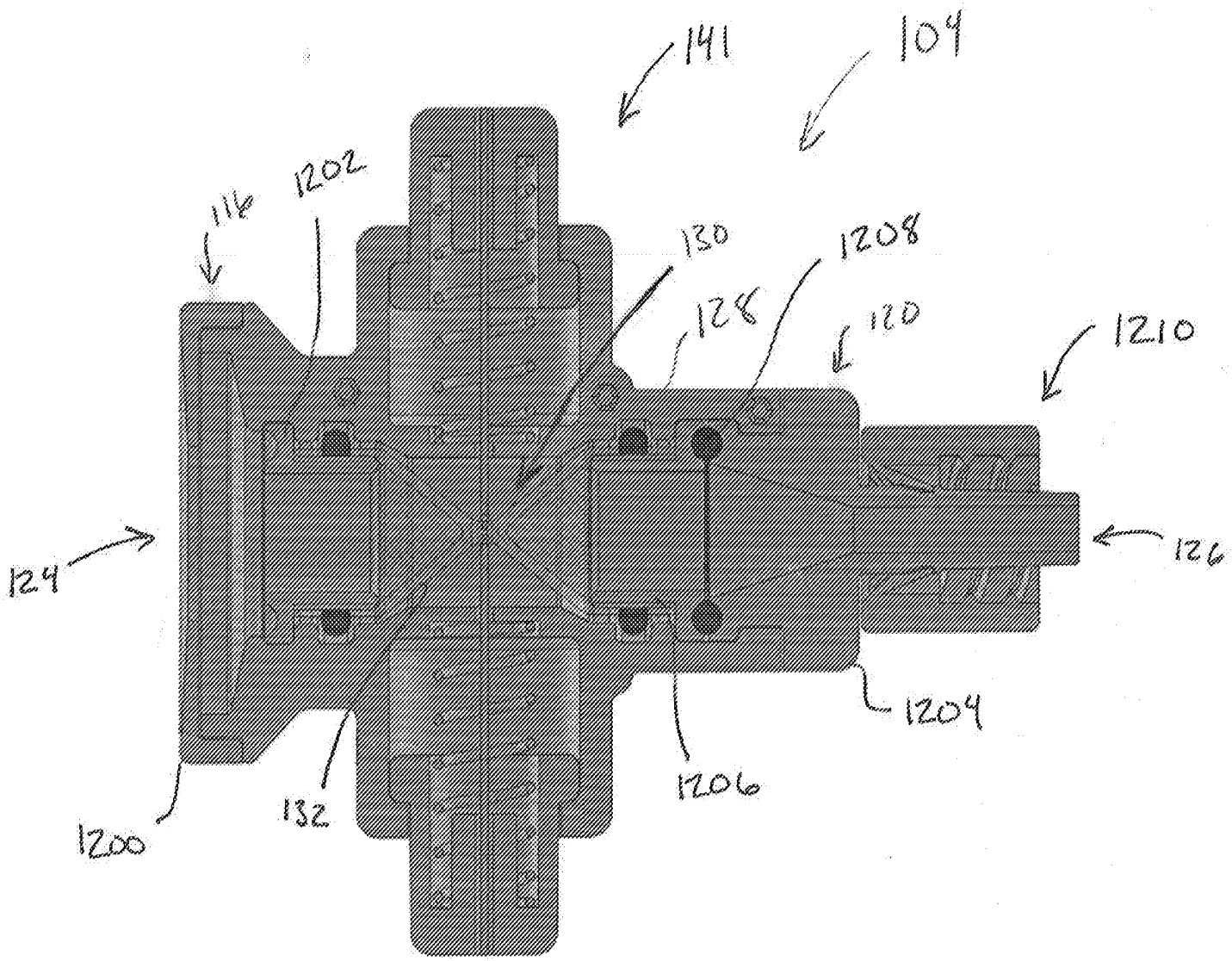
141
104
116
1202
130
1208
128
120
1210
124
126
1204
1206
132
1200

Figure 12