Trials@uspto.gov
571-272-7822

Paper: 6
Date: April 22, 2025

UNITED STATES PATENT AND TRADEMARK OFFICE

BEFORE THE PATENT TRIAL AND APPEAL BOARD

IMPERATIVE CARE, INC.,
Petitioner,

v.

INARI MEDICAL, INC.,
Patent Owner.

IPR2025-00156
Patent 11,697,012 B2

Before JEFFREY N. FREDMAN, ERIC C. JESCHKE, and TIMOTHY G. MAJORS, *Administrative Patent Judges.*

MAJORS, *Administrative Patent Judge*.

DECISION
Granting Institution of *Inter Partes* Review
35 U.S.C. § 314

I. INTRODUCTION

Imperative Care, Inc. ("Petitioner") filed a Petition (Paper 2, "Pet.") requesting *inter partes* review of claims 1–9 of U.S. Patent No. 11,697,012 B2 (Ex. 1001, "the '012 patent"). Pet. 1, 21. Inari Medical, Inc. ("Patent Owner") filed a Preliminary Response (Paper 5, "Prelim. Resp.").

Under 35 U.S.C. § 314(a), an *inter partes* review may not be instituted unless it is determined that there is a reasonable likelihood that the petitioner will prevail with respect to at least one of the claims challenged in the petition. For reasons explained below, we conclude that Petitioner shows a reasonable likelihood that it will prevail with respect to at least one of the '012 patent's challenged claims. We institute *inter partes* review on all challenged claims. *See SAS Inst. Inc. v. Iancu*, 584 U.S. 357, 362–63 (2018).

Findings and conclusions at this stage are preliminary and based on the current record. Any final decision will be based on a full trial record.

II. BACKGROUND

A. Real Parties-in-Interest

Petitioner identifies itself as the real party-in-interest. Pet. 95. Patent Owner identifies itself as the real party-in-interest. Paper 4, 2.

B. Related Matters

The parties identify the following lawsuit involving assertion of the '012 patent (and additional patents): *Inari Medical Inc. v. Imperative Care, Inc.*, No. 24-cv-3117 (N.D. Cal.).[1] Pet. 95; Paper 4, 2.

[1] Patent Owner further states that *Inari Medical, Inc. v. Inquis Medical, Inc.*, No. 24-1023-CFC (D. Del.) "may involve related issues." Paper 4, 2.

IMPERATIVE Ex. 1026
IPR Petititon - US 11,554,005

The parties also identify related matters before the Board. Pet. 96; Paper 4, 2–3. Those matters include IPR2024-01157 ("the 1157 IPR") as "challenging the claims of U.S. Patent No. 11,697,011, which is related by priority to the involved '012 Patent," and IPR2024-01257 as "challenging the claims of U.S. Patent No. 11,744,691, which is not related by priority to the involved '012 Patent but may involve related issues." Paper 4, 2–3.[2]

Patent Owner further identifies additional patents and patent applications as being related by priority to the '012 patent. Paper 4, 3 (identifying, e.g., U.S. Patent Nos. 11,865,291 and 11,000,682).

C. The '012 Patent (Ex. 1001)

The '012 patent is titled "Hemostasis Valves and Methods of Use." Ex. 1001, code (54). The patent issued July 11, 2023, from an application filed July 14, 2022, and claims the priority benefit of a provisional application filed September 6, 2017. *Id.* at codes (22), (45), (60).

According to the '012 patent, "the desire for improved patient outcomes has led to the development of hemostasis valves that facilitate minimally invasive surgery." *Id.* at 1:30–32. "In minimally invasive surgery, small incisions are created through a blood vessel [into] which one or several catheters are inserted." *Id.* at 1:33–35. "These catheters are moved to a position proximate to tissue, nerves, or other body structures targeted by the surgery, and then tools for performing the procedure are inserted through the lumens of some or all of these catheters." *Id.* at 1:36–40. "To minimize blood loss, prevent delivery of air into the vasculature, and to facilitate maintenance of sterility within the patient's body . . . , these

[2] The Board instituted trial in the 1157 IPR and denied institution in IPR2024-01257. IPR2024-01157, Paper 7; IPR2024-01257, Paper 10.

IMPERATIVE Ex. 1026
IPR Petititon - US 11,554,005

catheters are equipped with hemostasis valves." *Id.* at 1:41–44. According to the '012 patent, there is a desire for "new and improved" hemostasis valves, and the patent aims to describe such a valve. *Id.* at 1:59–60; *see also id.* at 1:61–5:23 ("Summary").

The '012 patent discloses that "[t]he valve can include a tubular [elongate] member that can be constricted, collapsed, and/or sealed by one or several tensioning mechanisms." *Id.* at 1:65–2:1. According to the patent, "[t]he tensioning mechanism can include at least one filament that extends around at least a portion of the tubular member," and such "filament can interact with the tubular member to constrict, collapse, and/or seal the tubular member via manipulation of the tensioning mechanism(s)." *Id.* at 2:1–2:11 (disclosing that such valve, by action of the tensioning mechanism and filament, "can seal around a wide range of tool sizes and shapes" that are passed through the tubular member). The patent discloses that, in embodiments, the tensioning mechanism can include an actuator coupled to the filament, which actuator can be operated to control movement of the filament from a first position (where the central lumen is constricted and sealed) to a second position (where the central lumen is un-constricted and open). *Id.* at 2:51–62. Moreover, the patent explains, an actuator can be biased toward the first or second positions. *Id.* at 2:64–66.

We reproduce below the '012 patent's Figure 2 including annotations provided by Petitioner, with additional annotations added by the Board.

IMPERATIVE Ex. 1026
IPR Petititon - US 11,554,005

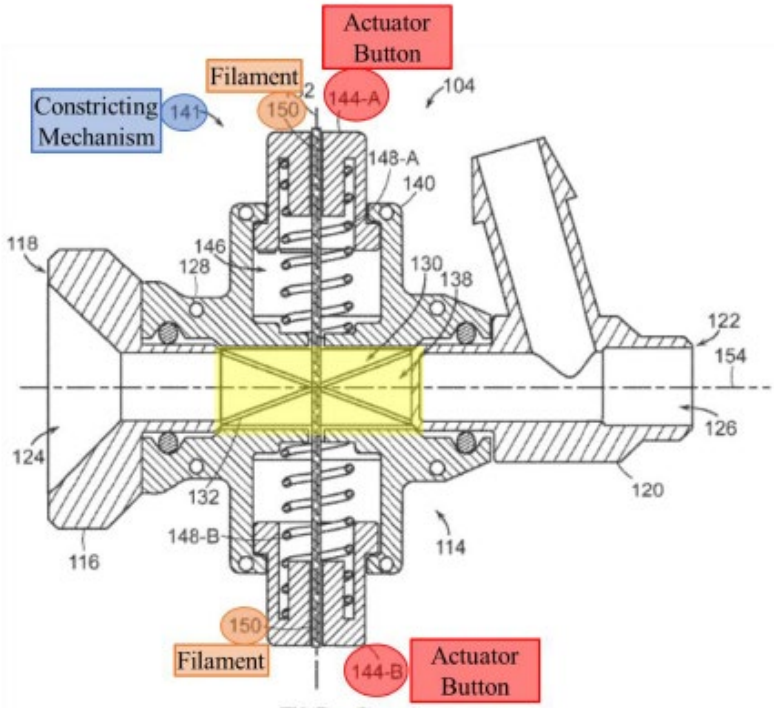

FIG. 2

Pet. 9 (modified by yellow highlight added by Board); Ex. 1001, 8:5–56, Fig. 2. Figure 2, as depicted above, is a side cross-sectional view of an embodiment of valve (104) described in the ’012 patent. Ex. 1001, 5:29–30. The valve includes housing 128, elongate member 132 defining a central lumen 138 and having a central axis 154, constricting mechanism 141 (blue highlight), filament 150 (orange highlights), and oppositely disposed actuator buttons 144-A and 144-B (red highlights). *Id.* at 8:5–9:38. In this embodiment, the filament is disposed at least partially around the elongate member and coupled to both actuator buttons (which are undepressed); the buttons are biased towards a first (i.e., closed) configuration by a bias feature (e.g., coil springs 148A, 148B) wherein the elongate member is collapsed and sealed in the region highlighted yellow (central lumen 138) by a tension/force applied to the filament. *Id.* Although not shown in the figure above, when the actuator buttons are depressed, the constricting mechanism moves to a second (i.e., open) configuration where the filament is loosened,

allowing expansion of the elongate member and unsealing of the central lumen. *Id.* at 9:54–62, Fig. 3 (showing open configuration).

According to the ’012 patent, the “filament 150 can be arranged in a variety of configurations.” Ex. 1001, 13:17–18. In some embodiments, the filament can comprise a “single loop 604 that can extend around the elongate member 132 and/or through which the elongate member 132 can be received as shown in FIG. 6.” *Id.* at 13:19–21. Alternatively, the filament may comprise one or more “U-shaped section[s]” or “bight[s]” like depicted in Figures 8 and 9. *Id.* at 13:30–42 (disclosing that “filament 150 can be configured to form a bight 800, which bight 800 can be a single bight or multiple bights” and, “[a]s used herein, a ‘bight’ refers to a U-shaped section between the two ends of the filament 150”). The patent further discloses that the “filament can be made from a variety of materials including, for example, a polymer, a synthetic, and/or a metal.” *Id.* at 9:13–16.

Figures 6–9 of the ’012 patent are reproduced below.

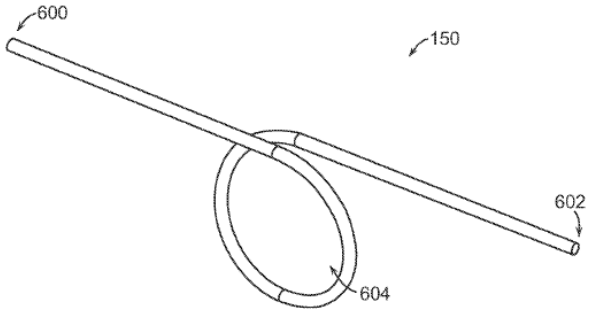

FIG. 6

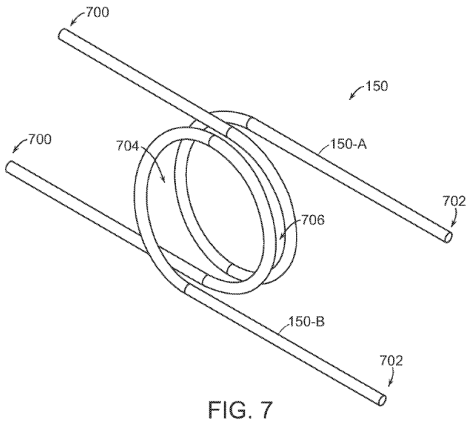

FIG. 7

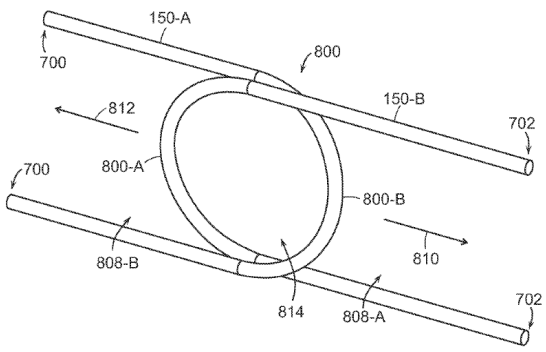

FIG. 8

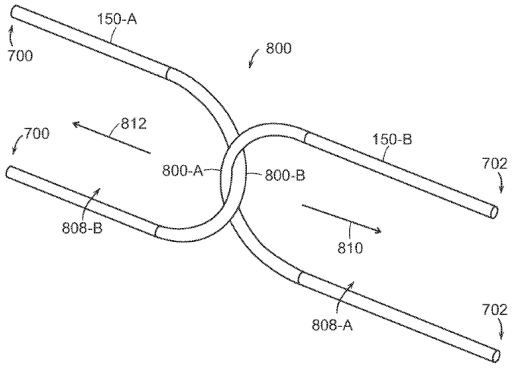

FIG. 9

Ex. 1001, Figs. 6–9. Figures 6–9 above show various filament configurations: "single loop" (Fig. 6), "multiple loops" (Fig. 7), or one or more "bights" (Figs. 8 and 9), which can be non-interlocking or interlocking. *Id.* at 13:17–25 (describing "single loop 604" and "multiple loops" (704, 706) embodiments as depicted in Figs. 6 and 7, respectively), 13:30–40 ("As used herein, a 'bight' refers to a U-shaped section between two ends of the filament 150" as depicted in Figures 8 and 9). According to the patent, "the filament 150 can comprise multiple filaments . . . as shown in FIGS. 7 through 9." *Id.* at 12:61–63.

The '012 patent discloses that, in "loop" embodiments like shown in Figures 6 and 7, a filament can be configured to form a "loop" (or "loops") "that can extend around the elongate member 132 [(not shown)] and/or through which the elongate member can be received." *Id.* at 13:19–21. Further, the patent discloses, "a diameter or size of the loop 604, or of the loops 704, 706 can decrease when the constricting mechanism 141 is moved from the second configuration to the first configuration." *Id.* at 13:26–29.

Figures 8 and 9 above depict a filament comprising first and second interlocking "bights" 800A, 800B for receiving and extending around respective portions of an elongate member. *Id.* at 13:30–51. The "bights" 800A and 800B define an "encircled area 814" into which the elongate

member can be received; movement of those bights in the directions indicated by arrows 812 and 810 "decreases the size of the encircled area 814 and constricts, collapses, and/or seals the elongate member 132 extending through the encircled area." *Id.* at 14:1–5.

D. Illustrative Claims

Petitioner challenges claims 1–9. Claim 1 is the only independent claim. It reads:

> 1. An aspiration catheter, comprising:
>
> an elongate, flexible tubular body, having a proximal end, a distal end and a central lumen;
>
> a hemostasis valve on the proximal end of the catheter, the hemostasis valve comprising
>
> (a) a collapsible tubular sidewall defining a valve lumen in communication with the central lumen; and
>
> (b) a constricting mechanism having at least a first actuator, a first filament formed into a loop around the collapsible tubular sidewall, the filament having at least a first end portion extending away from the loop and connected to the first actuator, and a first spring configured to move the first actuator in a direction that pulls the first end portion such that a diameter of the valve lumen decreases in response to reducing a diameter of the loop.

Ex. 1001, 22:10–25.

IMPERATIVE Ex. 1026
IPR Petititon - US 11,554,005

E. Prior Art and Asserted Grounds

Petitioner asserts that claims 1–9 are unpatentable based on the following grounds:

Grounds	Claims Challenged	35 U.S.C. §[3]	Reference(s)/Basis
1	1–9	102	Schaffer[4]
2	1–9	103	Schaffer
3	1–9	103	Schaffer, Hartley[5]
4	1–9	103	Schaffer, Eller[6]
5	1–9	103	Schaffer, Garrison[7]
6	1–9	103	Schaffer, Hartley, Garrison
7	1–9	103	Schaffer, Eller, Garrison

[3] The Leahy-Smith America Invents Act ("AIA"), Pub. L. No. 112–29, 125 Stat. 284, 285–88 (2011), revised 35 U.S.C. §§ 102, 103 effective March 16, 2013. Based on the uncontested assertion that September 6, 2017, is the earliest possible priority date for the '012 patent, we apply the AIA versions of §§ 102 and 103 in this Decision. Pet. 15.

[4] Schaffer et al., US 2003/0225379 A1, published Dec. 4, 2003 (Ex. 1005 ("Schaffer")).

[5] Hartley, US 2003/0116731 A1, published June 26, 2003 (Ex. 1006 ("Hartley")).

[6] Eller, US 9,980,813 B2, issued May 29, 2018 (Ex. 1007 ("Eller")). Petitioner notes that Eller published October 29, 2015. Pet. 21; *see* Ex. 1007, code (65).

[7] Garrison et al., US 2015/0173782 A1, published June 25, 2015 (Ex. 1011, ("Garrison")).

IMPERATIVE Ex. 1026
IPR Petititon - US 11,554,005

Petitioner also relies on testimony from Troy L. Thornton (Ex. 1003) in support of its challenge. In response, Patent Owner relies on testimony from Paul J. Zalesky, Ph.D. Ex. 2001.

III. ANALYSIS

A. Legal Standards

"In an [*inter partes* review], the petitioner has the burden from the onset to show with particularity why the patent it challenges is unpatentable." *Harmonic Inc. v. Avid Tech., Inc.*, 815 F.3d 1356, 1363 (Fed. Cir. 2016) (citing 35 U.S.C. § 312(a)(3)).

"[T]he dispositive question regarding anticipation [i]s whether one skilled in the art would reasonably understand or infer from the [prior art reference's] teaching that every claim element was disclosed in that single reference." *Dayco Prods., Inc. v. Total Containment, Inc.*, 329 F.3d 1358, 1368 (Fed. Cir. 2003) (quoting *In re Baxter Travenol Labs.*, 952 F.2d 388, 390 (Fed. Cir. 1991)) (emphasis omitted). "Because the hallmark of anticipation is prior invention, the prior art reference—in order to anticipate under 35 U.S.C. § 102—must not only disclose all elements of the claim within the four corners of the document, but must also disclose those elements arranged as in the claim." *Net MoneyIN, Inc. v. VeriSign, Inc.*, 545 F.3d 1359, 1369 (Fed. Cir. 2008) (internal quotation marks omitted).

A claim is unpatentable under 35 U.S.C. § 103 if the differences between the claimed invention and the prior art are such that the claimed invention as a whole would have been obvious at the time the invention was made[8] to a person having ordinary skill in the relevant art. *KSR Int'l Co. v.*

[8] The AIA revised § 103 such that obviousness is assessed "before the effective filing date of the claimed invention," but *KSR* and other

IMPERATIVE Ex. 1026
IPR Petititon - US 11,554,005

Teleflex Inc., 550 U.S. 398, 406 (2007). The question of obviousness is resolved on the basis of underlying factual determinations including: (1) the scope and content of the prior art; (2) any differences between the claimed subject matter and the prior art; (3) the level of ordinary skill in the art; and (4) secondary considerations (i.e., objective indicia) of nonobviousness when presented.[9] *Graham v. John Deere Co.*, 383 U.S. 1, 17–18 (1966). To show unpatentability based on a combination of teachings, "[a]n obviousness determination [also] requires finding both that a skilled artisan would have been motivated to combine the teachings of the prior art references to achieve the claimed invention, and that the skilled artisan would have had a reasonable expectation of success in doing so." *CRFD Rsch., Inc. v. Matal*, 876 F.3d 1330, 1340 (Fed. Cir. 2017) (internal quotation marks and citation omitted).

B. Level of Ordinary Skill in the Art

Petitioner proposes that the person of ordinary skill in the art ("POSA") in September 2017 "would have had an undergraduate degree in mechanical engineering or a related engineering discipline and 2–4 years of product design or engineering experience." Pet. 15 (citing Ex. 1003 ¶ 35). Patent Owner provides no alternative definition of the POSA's qualifications and, instead, applies Petitioner's definition in its Response. Prelim. Resp. 21.

---

obviousness precedents cited herein remain applicable despite this change in the timing of the obviousness inquiry.

[9] Petitioner states that it is not aware of any objective indicia of nonobviousness (Pet. 94) and Patent Owner's Preliminary Response does not provide argument about any objective indicia.

IMPERATIVE Ex. 1026
IPR Petititon - US 11,554,005

We apply Petitioner's proposed POSA level for this Decision, which level appears to be reasonable and consistent with the cited prior art.

C. Claim Construction

In an IPR, we construe claims using the same claim construction standard used in a civil action before the courts under 35 U.S.C. § 282(b), including construing claim language in accordance with its ordinary and customary meaning as understood by the POSA, in view of the patent's specification and considering the patent's prosecution history. 37 C.F.R. § 42.100(b). We need only construe terms where the parties dispute a term's meaning and only to the extent needed to resolve the controversy. *Realtime Data, LLC v. Iancu*, 912 F.3d 1368, 1375 (Fed. Cir. 2019).

Petitioner provides argument on the meaning of two claim terms—"aspiration catheter" and "filament." Pet. 16–20; Prelim. Resp. 15–21 (rebuttal argument). Those terms appear in independent claim 1 (e.g., a first filament formed into a loop). We address those terms in turn below.

1. "aspiration catheter"

Claim 1's preamble recites "[a]n aspiration catheter." Ex. 1001, 22:10. Petitioner contends that, as a general rule, a preamble does not limit the scope of a claim, and that the preamble term "aspiration" here merely describes a non-limiting "intended use" of an otherwise structurally-complete invention defined by the body of the claim. Pet. 18–19. Patent Owner responds that whether the term "aspiration" limits claim 1 is "not germane to Patent Owner's arguments here." Prelim. Resp. 21.

We need not decide at present if "aspiration" in the preamble phrase "aspiration catheter" is limiting. No dispute at this stage turns on whether "aspiration" is limiting, or on that term's meaning. *Realtime Data*, 912 F.3d

IMPERATIVE Ex. 1026
IPR Petititon - US 11,554,005

at 1375 (explaining that claims need only be construed to the extent necessary to resolve matters in dispute).

2. "filament"

Claim 1 requires, among other limitations, a hemostasis valve that includes a "collapsible tubular sidewall defining a valve lumen" and a constricting mechanism comprising "a first ***filament*** formed into a loop around the collapsible tubular sidewall." Ex. 1001, 22:18–19 (emphasis added). Moreover, claim 1 recites, the constricting mechanism includes at least one actuator "that pulls the first end portion [of the filament] such that a diameter of the valve lumen decreases in response to reducing a diameter of the loop." *Id.* at 22:23–25.

Petitioner argues that, based on the intrinsic evidence, the term "filament" means "at least 'one or more threads, lines, cords, ropes, ribbons, flat wires, sheets, or tapes.'" Pet. 16 (citing Ex. 1003 ¶¶ 48–54). According to Petitioner, the claims give little guidance on the term's meaning, but the Specification provides "explicit examples of 'filaments'" that are consistent with Petitioner's proposed interpretation. *Id.* at 16–17 (citing Ex. 1001, 9:21–23 (disclosing "the filament 150 can comprise one or several threads, lines, cords, rope, ribbon, flat wire, sheet, or tape"), 12:61–64 (disclosing "the filament 150 can comprise multiple filaments, and specifically, as shown in FIGS. 7 through 9, the filament 150 can comprise a first filament 150-A and a second filament 150-B.")). Petitioner notes Patent Owner's argument in a related proceeding that the term "filament" should be construed to require the filament be "flexible." Pet. 17. However, Petitioner argues, "the '012 patent does not describe the 'filament' as . . . 'flexible,'" and a related patent "specifically claimed a filament that 'is flexible,'

IMPERATIVE Ex. 1026
IPR Petititon - US 11,554,005

demonstrating that flexibility is not an inherent property." *Id.* (citing Ex. 1016, claim 1).

Patent Owner argues that a "POSA would understand that the term 'filament' as recited in Claim 1" as meaning "a thin, flexible length of material formed by one or more strands of material." Prelim. Resp. 15 (arguing Petitioner's proposed construction "omits the requirement that a filament is flexible"). According to Patent Owner, the intrinsic and extrinsic evidence supports its proposed construction. *Id.* at 15–21.

Concerning the intrinsic evidence, Patent Owner argues, for example, that "[t]he filament must be flexible to be able to be drawn tighter, allowing the loop to decrease in diameter to constrict the valve lumen" as required by claim 1's language. *Id.* at 16 (citing Ex. 2001 ¶ 58). Further, Patent Owner argues, the Specification describes the filaments shown in Figures 6 and 7 as forming one or more loops—necessitating filaments that are "flexible."[10] *Id.* at 16–17 (citing Ex. 1001, 13:18–29, Figs. 6 and 7); Ex. 2001 ¶ 59 (testimony of Dr. Zalesky that, if a filament of Figures 6 or 7 were inflexible, "it could not work as intended" and "would not decrease the 'diameter of the loop' as recited in Claim 1").

Patent Owner cites, as extrinsic evidence, the testimony of Petitioner's declarant, Mr. Thornton, in a related proceeding, as well as dictionary definitions for the term "filament." Prelim. Resp. 19–20. As stated by Patent Owner, Mr. Thornton admitted that, "in the ordinary meaning of filament, it has flexibility." *Id.* at 19 (citing, e.g., Ex. 2005, 123:1–15).

---

[10] Patent Owner states that, in the Institution Decision for the 1157 IPR, the Board recognized that Figure 6's filament must be "sufficiently flexible" in order to decrease the diameter of the loop as intended. Prelim. Resp. 20–21 (citing IPR2024-01157, Paper 7 at 16–17).

IMPERATIVE Ex. 1026
IPR Petititon - US 11,554,005

And, Patent Owner cites a dictionary that "defines a filament as 'a single thread or a thin flexible threadlike object, process, or appendage.'" *Id.* at 20 (citing, e.g., Ex. 2002, 467).

We agree with Petitioner that a "filament" may encompass one or several threads, lines, cords, robes, ribbons, flat wires, sheets, or tapes. The Specification supports such interpretation. Ex. 1001, 9:21–23. Nevertheless, as Patent Owner argues, Petitioner's interpretation is incomplete and does not address persuasively the dispute raised here—whether the "filament," as recited in claim 1, requires flexibility. Based on the parties' arguments at this preliminary stage, we agree with Patent Owner that flexibility is necessary.

The claims, as understood by the POSA, suggest that the filament must be flexible. Claim 1 "recites that 'the first filament [is] formed into a loop around the collapsible tubular sidewall" and that the "diameter of the valve lumen decreases in response to reducing a diameter of the loop." *See supra* Section II.D. As Dr. Zalesky credibly explains "[t]o 'reduc[e] a diameter of the loop,' the filament must be 'flexible' because if it were rigid or inflexible the loop would retain the same diameter when acted on by the first actuator." Ex. 2001 ¶ 58 ("This inherent property of flexibility is essential to the loop structure of the claims."). We observed essentially the same principle in the related 1157 IPR for embodiments where the filament forms a "loop" around the collapsible tubular member, such as shown in Figure 6 of the patent. IPR2024-01157, Paper 7 at 16 ("Thus, in the above embodiment [(shown in Fig. 6)] a flexible filament is required (i.e., a

IMPERATIVE Ex. 1026
IPR Petititon - US 11,554,005

filament that is sufficiently flexible that it can decrease the size/diameter of the loop to constrict and seal the valve).”).[11]

The Specification lends support to Patent Owner’s interpretation of claim 1 in this proceeding. The Specification discloses that a filament can be configured to form a “single loop” (like shown in Figure 6) that extends around an elongate, collapsible member, or the filament(s) can be configured to form “multiple loops” (like shown in Figure 7). Ex. 1001, 13:17–25, Figs. 6, 7. Figure 6 of the patent is reproduced below.

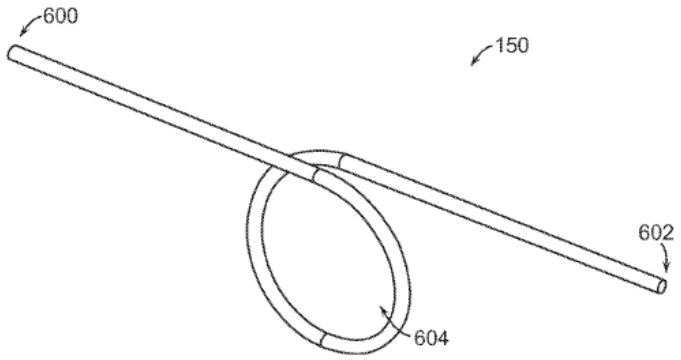

FIG. 6

Id. at Fig. 6. Figure 6 above depicts filament 150 having first and second ends (600, 602) and forming a single loop 604 for receiving the elongate member. *Id.* at 12:44–48, 13:17–29. Consistent with the challenged claims here, the Specification further discloses that the respective filament ends can be connected to opposed actuators (e.g., buttons) and “a diameter or size of the loop 604 . . . can decrease when the constricting mechanism 141 is moved from the second configuration to the first configuration” (i.e., when one or both of the filament ends are pulled by the actuator in opposing

[11] The ’012 patent and the patent challenged in the 1157 IPR share the same drawings and specification.

IMPERATIVE Ex. 1026
IPR Petititon - US 11,554,005

directions putting the filament under increased tension). *Id.* If the filament used to form this "loop" was not flexible to some degree, we do not see how the hemostasis valve would function as intended.

In the related 1157 IPR, we declined to adopt at the institution stage Patent Owner's interpretation of "filament" because, we observed, the patent included other embodiments that may not require a flexible filament. More specifically, we noted the "bight" embodiments such as described in the patent and as shown in Figures 8 and 9 (reproduced below), which may involve multiple interlocking U-shaped "bights."

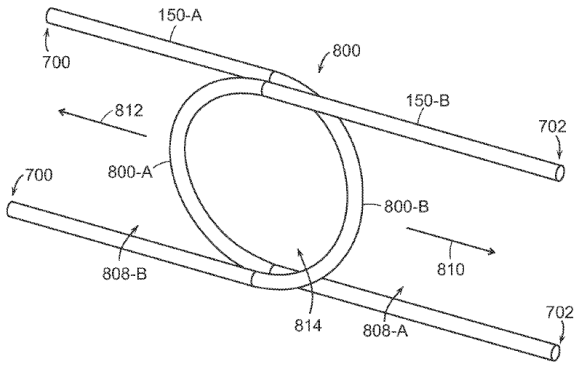

FIG. 8

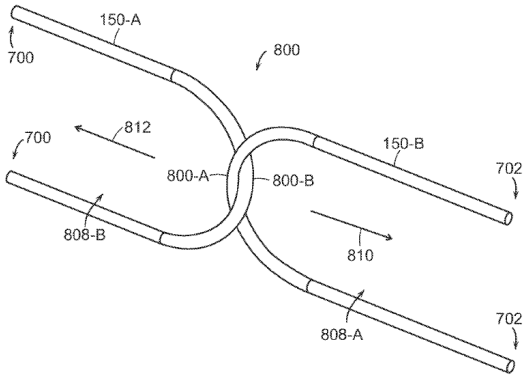

FIG. 9

IPR2024-01157, Paper 7 at 16–17; *see* Ex. 1001, Figs. 8, 9. Figures 8 and 9, reproduced side-by-side above, show filaments 150-A and 150-B forming first and second U-shaped bights (800-A and 800-B). Ex. 1001, 13:30–40. According to the patent, the bights together "define an encircled area 814, also referred to herein as a constricting area 814" and, as seen in Figure 9, movement of the bights in the directions indicated by arrows (810 and 812) "decreases the size of the encircled area 814 and constricts, collapses, and/or seals the elongate member 132 [(not shown)] extending through the encircled area 814." *Id.* at 14:2–5. We stated in the 1157 IPR Institution Decision that "[i]t is not evident . . . that this embodiment using 'bights'

IMPERATIVE Ex. 1026
IPR Petititon - US 11,554,005

requires that the filament be 'flexible' in the manner urged by Patent Owner." IPR2024-01157, Paper 7 at 17.

There is no irreconcilable inconsistency between our preliminary claim interpretation in this proceeding versus the 1157 IPR. Unlike the challenged claims here, claim 1 in the related 1157 IPR does not require that the "filament form[s] into a loop" where the "diameter of the loop" reduces when the end portion(s) of the filament are pulled. Prelim. Resp. 21 (arguing "[c]laim 1 [in this proceeding] requires that the filament be flexible regardless of the construction of the term 'filament'" in the related case). Claim 1 in the 1157 IPR is arguably broader concerning the "filament" and would purport to encompass, for example, both loop and bight embodiments. IPR2024-01157, Paper 7 at 8 (reproducing claim 1 of the related patent). And, if a filament forming a "bight" need not be "flexible" to work as intended, we saw no reason to interpret "filament" more narrowly at the institution stage in the 1157 IPR. IPR2024-01157, Paper 7 at 15–18.

Based on the intrinsic evidence, there appear to be material distinctions between filaments that form a "loop" as claimed versus filaments that form "bights." More particularly, the Specification describes the two types of filaments separately—using different terminology to describe how loops and bights are formed, and how loops and bights interface with an elongate, collapsible tubular member to provide the collapsing/constricting function. The following disclosures are illustrative:

> In ***some embodiments***, the at least one filament ***forms a loop around the elongate member***, and moving the tensioning mechanism from the second configuration to the first configuration ***reduces the size of the loop to thereby constrict the tubular member within the loop***. In ***some embodiments***, the ***filament forms at least one bight around a portion of the elongate member***. . . . In some embodiments, the at least one

IMPERATIVE Ex. 1026
IPR Petititon - US 11,554,005

> bight can include a first bight oriented in a first direction . . . and a second bight oriented in a second direction . . . . In ***some embodiments***, the ***first and second bights overlap to encircle a portion of the tubular member within a constricting area***.

Ex. 1001, 4:62–5:8 (emphasis added); *see also id.* at 13:17–61 (describing filaments that form "loops" around the elongate member (as shown in Figs. 6 and 7) distinctly from filaments that form "bights" that define an "encircled area" or "constricting area" around the elongate member (as shown in Figs. 8 and 9)). Moreover:

> The return of the constricting mechanism 141 to the first configuration, or the ***movement of the constricting mechanism 141 to the first configuration can include*** the ***decreasing of the size and/or diameter of one or several loops*** formed by the filament 150 ***and/or the movement of one or several bights 800*** such as, for example, the movement of the first bight 800-A in the first direction indicated by arrow 810 and the movement of the second bight 800-B in the second direction indicated by arrow 812 ***to reduce the size of the constricting area 814***.

Id. at 15:28–37. These disclosures suggest that filaments that form *loops with a loop diameter that can be decreased* when the filament is under tension are not the same as filaments that form *bights defining an encircled or constricting area with a size that can be reduced* when the bights are placed under tension.

The prosecution history of the '012 patent also draws a distinction between the patent's loop and bight embodiments and is more consistent with Patent Owner's interpretation of the challenged claims. Prelim. Resp. 12–14, 28–30 (arguing the Specification and file history "distinguish[] the illustrated filament bights from the filament loops in Figure 6 and 7"). During prosecution, the Examiner entered an election/restriction requirement, finding the application disclosed distinct species of the

IMPERATIVE Ex. 1026
IPR Petititon - US 11,554,005

hemostasis valve and "distinct sub-species of filament" for use with the valves. Ex. 1002, 180. The Examiner identified, and required that the applicant (i.e., Patent Owner) elect from the valves of Figures 1–5 or Figure 12, and the filament sub-species represented by, *inter alia*, Fig. 6, Fig. 7, Fig. 8, and Fig. 9. *Id.* (requiring applicant elect a single species "for prosecution on the merits to which the claims shall restricted if no generic claim is finally held allowable" and stating "[c]urrently, no claim is generic").

In response, applicant elected the filament sub-species for a loop embodiment—"Species 1B (Fig. 6)." Ex. 1002, 175 (election without traverse). Applicant represented that, "[b]ased on the Applicant's review, claims 1–9 read on Species I ([valve in Figs. 1–5]) and Species IB." *Id.*; Ex. 2001 ¶ 52 (testifying "the elected Species 1B is directed to the filament loop embodiment rather than the bight embodiments (Figures 8 and 9)").[12] The Examiner entered no subsequent rejection and, soon thereafter, allowed the claims. Ex. 1002, 81–87. This prosecution history supports Patent Owner's position that claims 1–9 read on embodiments where the filament forms a "loop," as described and depicted in Figure 6 of the patent, and not "bights" as described in Figures 8 and 9. *Uship Intell. Props., LLC v. United States*, 714 F.3d 1311, 1315 (Fed. Cir. 2013) ("We hold that a patent

[12] In a footnote of its Preliminary Response, Patent Owner contends its election also covers the embodiment of Figure 7 "because Figure 7 includes, *inter alia*, the filament of Figure 6." Prelim. Resp. 28 n.4. We need not decide here whether the election should also extend to Figure 7 (a multi-loop embodiment). It is, however, evident at present that Patent Owner's election did not include the bight embodiment(s) represented by Figures 8 and 9. *Id.* ("Figures 8 and 9 do not include a 'loop' as explained herein and, in fact, are the same embodiment.") (citing Ex. 2001 ¶ 52).

IMPERATIVE Ex. 1026
IPR Petititon - US 11,554,005

applicant's response to a restriction requirement may be used to interpret patent claim terms or as a source of disclaimer."). As explained above, the "loop" described would not work unless the filament was flexible.

For the reasons above, we determine on this preliminary record that the filament of claim 1 should be construed to be sufficiently flexible that it can be "formed into a loop around the collapsible tubular sidewall" and that, upon the filament's first end portion being pulled by the actuator, "the diameter of the valve lumen decreases in response to reducing a diameter of the loop" as otherwise expressly recited by claim 1.[13]

D. Asserted References

Petitioner asserts, and Patent Owner does not dispute, that Schaffer, Hartley, Eller, and Garrison are each prior art under 35 U.S.C. § 102(a)(1). Pet. 21.

1. Schaffer (Ex. 1005)

Schaffer is a U.S. patent application that published December 4, 2003. Ex. 1005, code (43). Schaffer is titled "Composite Stasis Valve" and describes a "valve for blocking the flow of gas or fluid with or without an instrument in place within the gas/fluid path." *Id.* at Abstr.; *see also id.* ¶¶ 2–3 (disclosing that Schaffer "relates to catheters, in particular to composite fluid-stasis valves for use with catheters" and "[f]luid stasis

[13] The dispute about the claims being limited to "flexible" filaments is potentially dispositive only for Grounds 1, 2, and 5 (because Schaffer is alleged to teach "rigid" actuating members comprising the alleged filament). *See, e.g.*, Prelim. Resp. 2–3. For the remaining grounds, Patent Owner does not dispute that Hartley and/or Eller disclose a flexible filament (e.g., flexible string or flexible wire).

IMPERATIVE Ex. 1026
IPR Petititon - US 11,554,005

mechanisms are commonly used to prevent loss of fluids from the insertion site of a catheter").

An embodiment of Schaffer's fluid-stasis valve, including Petitioner's uncontested annotations, is shown below.

First Position – Actuator Buttons Undepressed

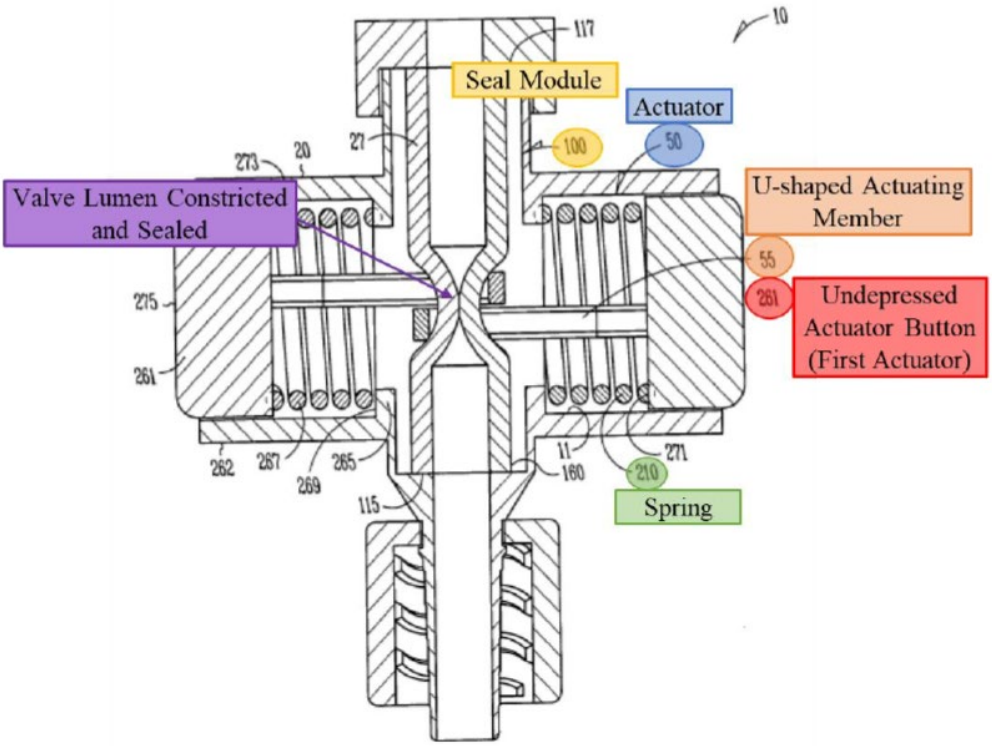

Fig. 32

Pet. 35 (Ex. 1008, Fig. 32[14] (annotated)); Ex. 1005, Fig. 32, ¶ 75 ("FIGS. 30–34 illustrate one embodiment of the stasis valve 10 including a seal module 100 having a lumen sized to allow the passage of fluids or gases."); Ex. 1008, 16–19 (Figs. 30–34). Schaffer's Figure 32, above, is a cross-sectional view of a stasis valve 10 in a "first position," where actuator button(s) 261 (red highlight) are undepressed, allowing seal module 100

[14] Petitioner uses drawings from Schaffer submitted during prosecution of the Schaffer application due to those drawings' improved clarity compared to the drawings appearing in the application as published. Ex. 1008.

(yellow highlight) to take on a collapsed configuration such that a valve lumen (purple highlight) is at least partially collapsed/constricted and sealed by a compressive force provided by spring(s) (green highlight), which force is applied to actuating member(s) 55 (orange highlight) and transferred to a central portion of seal module 100. Ex. 1005, Fig. 32, ¶¶ 75–77; Ex. 1008, 17. Schaffer discloses that actuator 50 (dark blue highlight) "include[s] an actuating member 55 which, in one option, is U-shaped" (orange highlight). Ex. 1005 ¶ 76; *see also* Ex. 1008, 18 (perspective view of valve 10, showing valve with two U-shaped actuating members 55). Schaffer discloses that, in the first position, the actuating members 55 "are, in one option, disposed at least partially circumferencially [*sic*] disposed about" the seal module "depressing and at least partially collapsing a portion 108 of the containment structure 160 by a compressive force 67 (e.g., by a spring 210)." Ex. 1005 ¶ 77. Schaffer teaches that actuating members may optionally comprise aluminum or plastic. Ex. 1005 ¶¶ 81, 82 (actuating members and buttons may, for example, be machined from aluminum).

Although not shown in Figure 32 above, when the actuator buttons of this illustrated embodiment are pressed, the stasis valve takes on a "second [open or unsealed] position." Ex. 1005 ¶ 77, Fig. 34 (showing the valve with both buttons depressed such that central portion of the valve lumen/seal module retracts to an unsealed configuration). According to Schaffer:

> In the second position, the actuators 50 are disposed away from a portion 108 of the seal module 100 by a compressive force 67 (e.g., by depressing the distal end 275 of the actuator button 261). As each actuator button 261 is depressed, each actuator 50 slides along the cylindrical interior wall 11 of the housing 20. The proximal end 273 of each actuator button 261 compresses the distal end 271 of each resilient member 267 which in turn, the proximal end 269 of each resilient member 267 compresses

IMPERATIVE Ex. 1026
IPR Petititon - US 11,554,005

> against the inner flange wall 265 of the housing 20. Such movement allows each engaged actuating member 55 to forcibly disengage opposing outer walls 27 of seal module 100 allowing the portion 108 of the containment structure 160 to retract to an uncollapsed configuration where gases and fluids can pass therethrough.

Id. ¶ 77, Fig. 34.

2. Hartley (Ex. 1006)

Hartley is a U.S. patent application that published June 26, 2003. Ex. 1006, code (43). Hartley is titled "Access Valve" and relates to an access valve for laparoscopic or intralumenal deployment devices. *Id.* at Abstr., code (54); *see also id.* ¶ 3 ("The invention will be discussed in . . . relation to fluid flow prevention and access valves in medical applications for instance where it is desired to seal around a catheter or other instrument . . . to prevent loss of blood or other fluid.").

Hartley's Figure 5 is reproduced below.

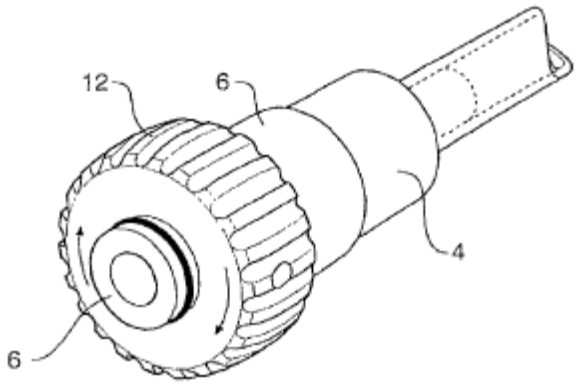

Fig 5

Ex. 1006, Fig. 5. Figure 5 above is a perspective view of an illustrative delivery catheter and constriction valve described in Hartley. *Id.* ¶ 29. The valve includes, *inter alia*, catheter body 4, cylindrical housing 6, and rotary actuator 12. *Id.* ¶ 31.

IMPERATIVE Ex. 1026
IPR Petititon - US 11,554,005

The action of Hartley's valve is more clearly seen in Figures 3 and 4, reproduced side-by-side below.

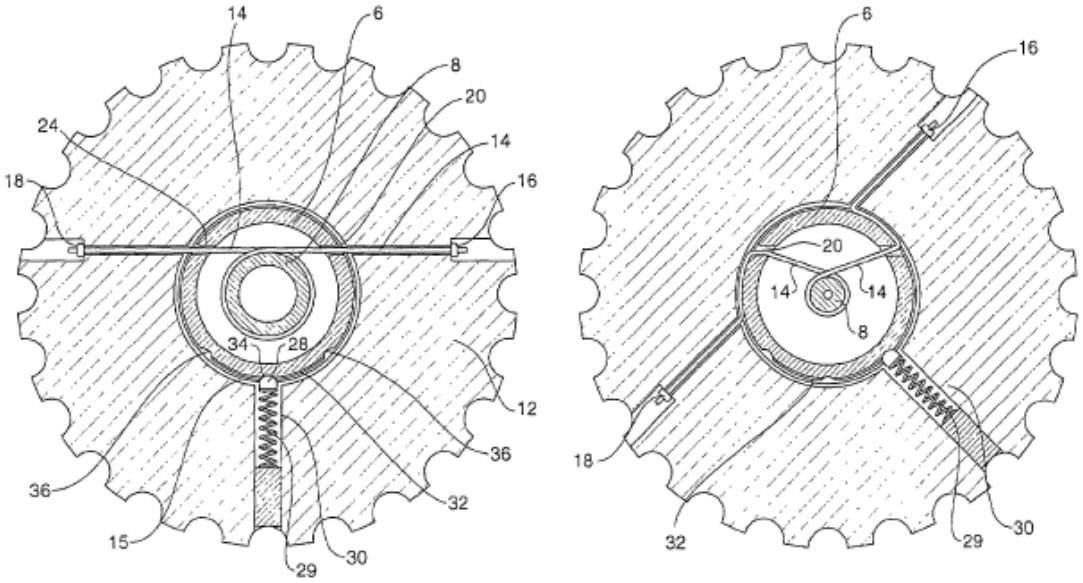

Fig 3 Fig 4

Ex. 1006, Figs. 3–4. Figures 3 and 4 of Hartley are top, cross-sectional views of a constriction valve, showing, respectively, the valve in an open and closed configuration. *Id.* ¶¶ 27–28, 31–34. In the open configuration (above left), rotary actuator 12 is mounted to cylindrical housing 6, and a string 14 is mounted to portions of the rotary actuator with knots 16, 18. *Id.* ¶ 31. String 14 (or another suitable flexible member) is wound around a cylindrical elastomeric diaphragm 8. *Id.*; *see also id.* ¶¶ 16–17 ("The flexible member may be a string, suture or band or other suitable material.").

Hartley teaches that "[r]otation of the rotary actuator 12 with respect to the cylindrical housing 6 will cause the string 14 to be pulled in both directions at once and hence the cylindrical diaphragm 8 to be constricted" and sealed as shown in Figure 4 (above right). *Id.* ¶¶ 31, 34. According to Hartley, its invention provides "an access or constriction valve arrangement

which will close over a range of diameters of devices passed through the valve or can close completely down to be self[-]sealing." *Id.* ¶ 37.

3. Eller (Ex. 1007)

Eller is a U.S. patent that issued May 29, 2018, and the application for that patent published October 29, 2015. Ex. 1007, codes (45), (65). Eller relates to "[s]elective fluid barrier valve devices" and methods of treatment using such devices. *Id.* at Abstr.

Eller describes "a selective fluid barrier device compris[ing] a housing, an actuator, a sleeve, a wire member, and a connector." *Id.* "The sleeve defines a passageway that extends through the [valve]" and [t]he actuator is movable between a first position and a second position" where the first position allows fluid to pass through the sleeve and, in the second position, fluid cannot pass through the sleeve. *Id.*

An embodiment of Eller's selective fluid barrier valve device is shown in Figure 15 below.

IMPERATIVE Ex. 1026
IPR Petititon - US 11,554,005

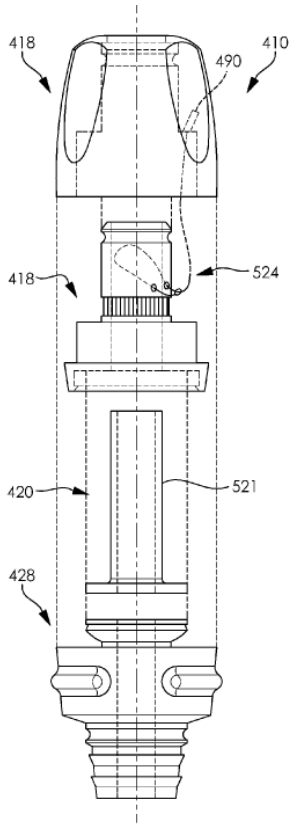

FIG. 15

Ex. 1007, Fig. 15; *see also id.* Figs. 1–2 (perspective and exploded views of similar valve device). Figure 15, reproduced above, is an exploded view of an illustrative selective fluid barrier valve of Eller. The valve device 410 includes, among other features, actuator 418, sleeve 420, and a wire member 422 (not labeled) with a first end 524 attached to actuator 418 within cavity 490. *Id.* at 21:37–22:10 ("wire member can be positioned such that it extends at least one full revolution around the outer surface of the sleeve"); *see also id.* at Figs. 16–17 (showing wire 422 looped around sleeve 420 within housing 416). As disclosed in Eller, movement (e.g., rotation) of the actuator from its first position to its second position pulls the wire member to constrict and close sleeve 420. *See, e.g.*, *id.* at 22:25–31, 1:55–2:6 (disclosing that, in the second configuration, "the sleeve passageway is closed and prevents fluid from passing"). Eller further teaches that the valve

device can "be biased to the second [(closed)] configuration" by, for example, using a spring. *Id.* at 19:22–30.

Eller teaches that its disclosure applies to many types of actuators. *Id.* at 8:27–44. According to Eller, "while a rotatable member 29 has been illustrated, a selective fluid barrier valve device can include any suitable actuator capable of moving . . . between a first configuration and a second configuration. Skilled artisans will be able to select a suitable actuator" and "[e]xample actuators . . . include rotatable actuators, linear actuators, slidable actuators . . . and any other actuator considered suitable for a particular embodiment." *Id.*

Eller discloses that a "wire member . . . can have any suitable structure and comprise any suitable number of strands and/or fibers that are twisted, or otherwise interconnected to one another." *Id.* at 15:61–16:6 (teaching "wire member can comprise a suture or a cable"). Eller discloses that "[a]ttachment between a wire member and a housing and/or an actuator can be accomplished using any suitable method or technique" including, for example, "adhesives, welding, [or] fusing." *Id.* at 14:37–53.

4. Garrison (Ex. 1011)

Garrison is a U.S. patent application that published on June 25, 2015. Ex. 1011, code (43). Garrison is titled "Methods and Systems for Treatment of Acute Ischemic Stroke" and relates to a system for treating an artery, especially the cerebral arterial vasculature. *Id.* at Abstr., code (54); *see also id.* ¶¶ 2 ("[T]he present disclosure relates to methods and systems for transcarotid access of the cerebral arterial vasculature and treatment of cerebral occlusions."), 7 ("Disclosed are methods and devices that enable safe, rapid and relatively short transcarotid access to the cerebral and intracranial arteries to treat acute ischemic stroke . . . [and] include one or

IMPERATIVE Ex. 1026
IPR Petititon - US 11,554,005

more transcarotid access devices, catheters, and thrombectomy devices to remove the occlusion.”).

Garrison discloses embodiments having “aspiration and flow control elements configured to be used with an arterial access device, a guide catheter, and/or a catheter of the disclosed system.” *Id.* ¶ 130. An embodiment of Garrison’s system is shown in Figure 34 below, which figure includes Petitioner’s added labeling and color-coding. Pet. 85 (Ex. 1011, Fig. 34 (annotated by Petitioner)); Ex. 1011, Fig. 34.

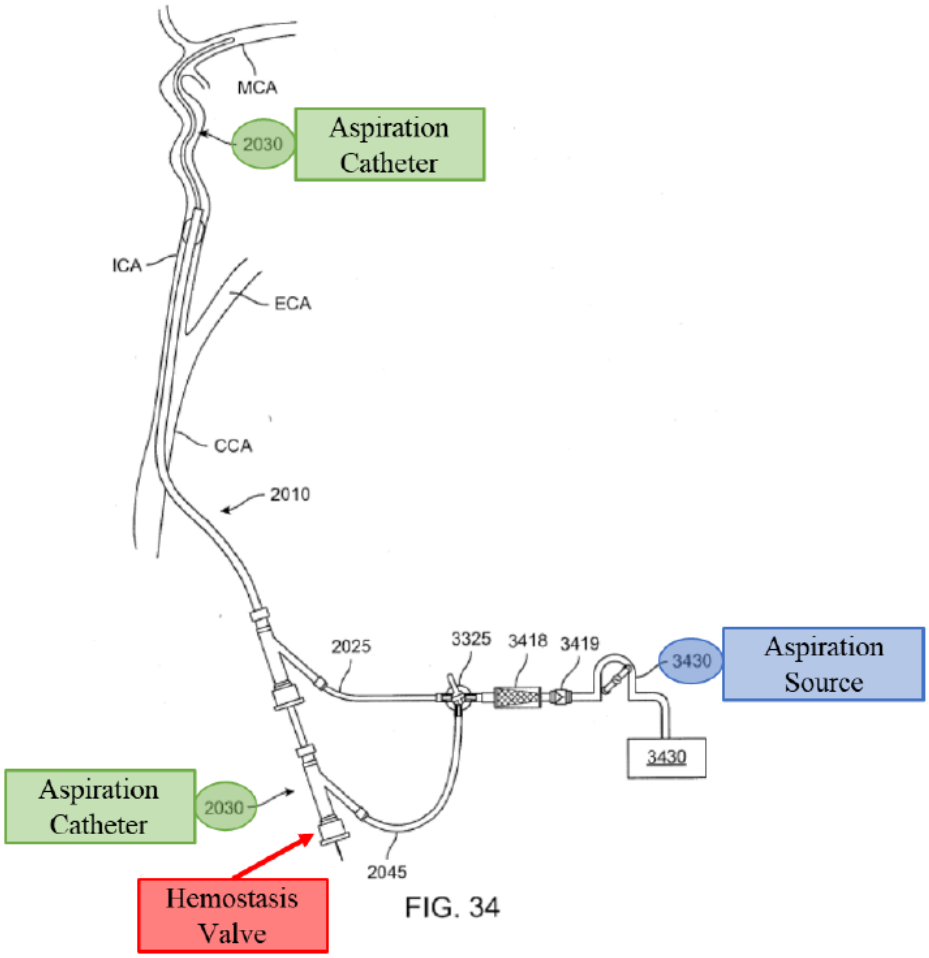

FIG. 34

Garrison’s Figure 34, above, “shows a system whereby both the arterial access device 2010 and catheter 2030 [(highlighted green)] are connected to the same aspiration source 3430 [(highlighted blue)] via flow lines 2025 and

2045, respectively." Ex. 1011 ¶ 132. Moreover, Garrison discloses that the system may include valves (e.g., hemostasis valves (unnumbered but highlighted red in Fig. 34 above)) to allow introduction of devices while also preventing or minimizing blood loss during procedures. *See, e.g.*, *id.* ¶ 53, Fig. 3 (showing proximal port 2015 with hemostasis valve).

E. Anticipation by Schaffer (Ground 1)

Petitioner argues that claims 1–9 are anticipated by Schaffer. Pet. 22–83. Our analysis below focuses on claim 1 and the parties' argument related to whether Schaffer discloses a "filament" as claimed. *See* Pet. 35–40, 56–57 (addressing Schaffer's alleged teaching of a "filament formed into a loop" that "decreases in diameter" when Schaffer's actuating member (as the alleged filament) is pulled by a spring force); Prelim. Resp. 22–30 (arguing, *inter alia*, that Schaffer's U-shaped actuating members would be understood as "rigid" and do not meet claim 1's "filament' limitations because such members are inflexible and incapable of forming a loop as claimed).

Petitioner contends that "Schaffer's U-shaped actuating members are a 'filament.'" Pet. 36 (citing Ex. 1005 ¶ 76, Fig. 31; Ex. 1003 ¶¶ 90–91). Further, Petitioner contends, Schaffer's two U-shaped actuating members "collectively loop" around the seal module. *Id.* at 37–38. Petitioner's annotation to Schaffer's Figure 31, reproduced below, helps illustrate Petitioner's position.

IMPERATIVE Ex. 1026
IPR Petititon - US 11,554,005

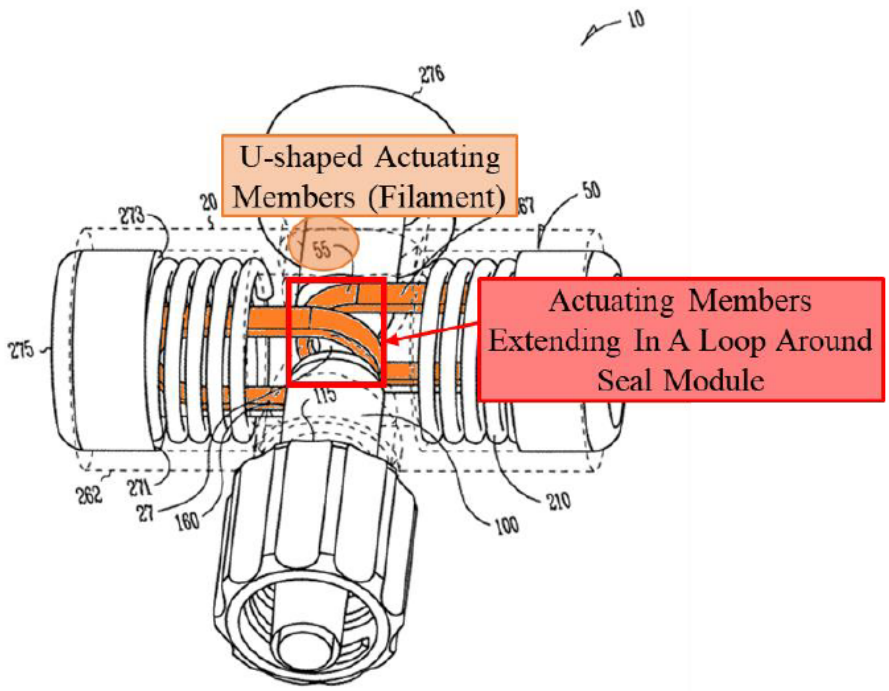

Fig. 31

Id. (Ex. 1005, Fig. 31; Ex. 1008, Fig. 31 (annotated by Petitioner)).

Figure 31 of Schaffer above depicts seal valve 10 in a perspective view with housing 20 represented with hashed lines (i.e., phantom view) so the valve's internal features are more readily shown. As shown, two U-shaped actuating members 55 (orange highlights) receive and at least partially surround a collapsible portion of seal module 100. *See* Ex. 1005 ¶ 77 ("actuating members 55 of the actuators 50, are, in one option, disposed and at least partially circumferencially [*sic*] disposed about the portion 108 of seal module 100"). Petitioner adds a red box to Figure 31 where the two U-shaped actuating members receive a portion of the seal module, which box Petitioner labels "actuating members extending in a loop around seal module." Pet. 38 (citing Ex. 1003 ¶¶ 93–94) (capitalization omitted).

According to Petitioner, "[t]hat Schaffer depicts two actuating members" as comprising the alleged filament that forms the alleged loop is

"of no moment here." Pet. 36–39. In support, Petitioner argues that the '012 patent discloses that a "filament" can comprise "multiple filaments" and Petitioner compares Schaffer's U-shaped actuating members to the '012 patent's embodiments with two overlapping U-shaped sections or "bights." *Id.* (citing Ex. 1001, 12:61–13:16, Fig. 8). Petitioner further argues that "the loop formed by the actuating members decreases in diameter as the first end portion of the actuating member is pulled by the spring." Pet. 56–57 (citing Ex. 1005 ¶ 77; Ex. 1003 ¶ 125).

We are doubtful that Petitioner can prevail on its anticipation challenge given our preliminary claim interpretation. As discussed above, the claimed filament requires flexibility to form a loop that decreases in diameter when the ends (or end) of the filament are pulled. *See supra* Section III.C.2. Patent Owner argues, and we agree at this stage, that a skilled artisan would more likely understand the U-shaped actuating members described in Schaffer as being substantially "rigid." *See, e.g.*, Prelim. Resp. 22–24 (noting, e.g., that Schaffer discloses that its actuators and actuating members can be made by machining pre-existing amounts of metals and/or plastics); Ex. 1005 ¶¶ 81–82; Ex. 2001 ¶ 71. The Petition provides no persuasive explanation to support the notion that a POSA would have understood Schaffer's U-shaped members as being "flexible," much less that such members would have sufficient flexibility to loop around a collapsible tubular sidewall and otherwise behave like claimed.[15] To the

[15] Petitioner notes that, in related proceedings, Patent Owner argued that Schaffer's actuating members are "rigid," but Petitioner states only that "PO's arguments are inconsistent with Schaffer." Pet. 36 (citing Ex. 1003 ¶¶ 89–91). This threadbare contention, which is undeveloped in the Petition, does not demonstrate that Schaffer discloses flexible filaments. *Intelligent Bio-Systems, Inc. v. Illumina Cambridge Ltd.*, 821 F.3d 1359, 1369 (Fed.

IMPERATIVE Ex. 1026
IPR Petititon - US 11,554,005

contrary, we tend to agree with Patent Owner that Petitioner "implicitly admits" that Schaffer's U-shaped members are rigid when Petitioner asserts that actuation of those members to constrict the seal module could create gaps and routes for possible leakage compared to alternative uses of the flexible string or wire member disclosed in Hartley and Eller. Prelim. Resp. 22–23 (citing Pet. 40–46).

Moreover, insofar as Petitioner relies on the '012 patent's "bight" embodiments to support its anticipation arguments, as we explained above, those embodiments appear distinct from "loop" embodiments encompassed by the claims here. *See supra* Section III.C.2. As Patent Owner contends, "Figures 8 and 9 of the '012 Patent illustrate two positions of a different arrangement in which two filaments form U-shaped bights rather than [a] loop." Prelim. Resp. 27–28 (annotating "814 Encircled Area" in Figure 8 as distinct from "604 Loop" of Figure 6); Ex. 1001, 13:30–51; Ex. 2001 ¶¶ 77–78; *see also* Prelim. Resp. 28–29 ("[W]hen the '012 Patent uses the term 'loop,' the term refers to a loop, and not multiple U-shaped filaments that overlap as shown in Figures 8 and 9" and "the specification . . . distinguishes the illustrated filaments bights from filament loops in Figure 6 and 7.").

For at least the reasons above, we are unpersuaded that Petitioner is reasonably likely to prevail in establishing that claim 1 is anticipated by Schaffer. And, if Schaffer does not anticipate claim 1, it does not anticipate

---

Cir. 2016) (explaining that it is of "the utmost importance that petitioners in the IPR proceedings adhere to the requirement that the initial petition identify 'with particularity' the 'evidence that supports the grounds for the challenge to each claim" (quoting 35 U.S.C. § 312(a)(3)); *SmithKline Beecham Corp. v. Apotex Corp.*, 439 F.3d 1312, 1320 (Fed. Cir. 2006) ("A skeletal argument, really nothing more than an assertion, does not preserve a claim.") (internal quotation marks omitted).

IMPERATIVE Ex. 1026
IPR Petititon - US 11,554,005

claims 2–8. *RCA Corp. v. Applied Digital Data Sys., Inc.*, 730 F.2d 1440, 1446 (Fed. Cir. 1984) (holding that, if prior art does not anticipate an independent claim, it cannot anticipate an associated dependent claim).

F. Obviousness over Schaffer and Hartley (Ground 3) or Schaffer and Eller (Ground 4)

Petitioner argues that claims 1–9 would have been obvious over the combinations of Schaffer with Hartley (Ground 3), or Schaffer with Eller (Ground 4). Pet. 24–46, 54–57 (allegations related to Ground 3, claim 1), 24–57 (allegations related to Ground 4, claim 1), 57–83 (dependent claims).

The analysis below focuses on Petitioner's challenge to claim 1 as illustrative. Patent Owner does not, at this time, provide separate argument related to any of the challenged dependent claims. Prelim. Resp. 61.

As we discuss in more detail below, Petitioner contends that the combination of Schaffer and Hartley (or Schaffer and Eller) teaches or suggests all the limitations of claim 1, even if the Board adopts a narrower claim interpretation requiring a flexible filament. *See, e.g.*, Pet. 40–46 (addressing Hartley's disclosure of a flexible "string 14" that loops around an elastomeric cylindrical diaphragm defining a hemostasis valve lumen for constricting and sealing that lumen when the string is pulled in opposing directions) (citing, e.g., Ex. 1006 ¶¶ 31, 34, 37, Fig. 4 (annotated); Ex. 1003 ¶¶ 96–100). Patent Owner does not, at this stage, provide any persuasive argument to the contrary.

For Grounds 3 and 4, Petitioner contends that most of claim 1's limitations are found in Schaffer's disclosure. Petitioner argues, for example, that Schaffer discloses claim 1's elongate "tubular body" defining a central lumen because Schaffer describes the use of flexible "catheters" with Schaffer's hemostasis valves. Pet. 27–29 (citing, e.g., Ex. 1005 ¶¶ 47,

IMPERATIVE Ex. 1026
IPR Petititon - US 11,554,005

56, 77; Ex. 1003 ¶ 73). Petitioner further argues that Schaffer teaches or suggests a hemostasis valve comprising "a collapsible tubular sidewall defining a valve lumen" as recited in claim 1. *Id.* at 32–33. Petitioner cites Schaffer's disclosure of a "seal module 100" that can be at least partially collapsed by a compressive force. *Id.* (citing, e.g., ¶¶ 49, 51, 54, 58, 77, Fig. 12, Fig. 32; Ex. 1003 ¶¶ 83–85). Petitioner argues that Schaffer teaches or suggests features of the claimed "constricting mechanism," including at least a first actuator (i.e., first and second oppositely disposed buttons (261)), and that such actuator(s) are operable under the force of a spring (or springs) to constrict the seal module. *Id.* at 33–35 (citing, e.g., Ex. 1005 ¶¶ 75–77, Fig. 32; Ex. 1003 ¶¶ 87–89). According to Petitioner, actuation of the button(s) of Schaffer's valves allows the valve lumen to take on open (second) and closed/sealed (first) configurations depending on whether the button(s) are, respectively, pressed and released. *Id.* at 54–57 (citing, e.g., Ex. 1005 ¶ 77, Figs. 31–34; Ex. 1003 ¶¶ 122–125). Patent Owner does not, on this record, challenge the above contentions by Petitioner.

Grounds 3 and 4 rely, respectively, on replacing the U-shaped actuating members of Schaffer with the flexible string of Hartley or flexible wire member of Eller to meet the "filament" as claimed. Below we focus primarily on the combination of Schaffer and Hartley because the parties' arguments under Grounds 3 and 4 substantially overlap at this stage.

For Ground 3, Petitioner contends that a skilled artisan "would have found it obvious to substitute Hartley's string for Schaffer's actuating members," arguing, *inter alia*, that such modification "merely entail[s] substitution of one known element (Hartley's string) for another (Schaffer's actuating members) to yield the predictable result of constricting Schaffer's valve to form a seal." Pet. 42–46 (arguing, e.g., that a POSA would have

IMPERATIVE Ex. 1026
IPR Petititon - US 11,554,005

recognized Hartley's flexible "string . . . encircles the central lumen and precisely conforms to the diameter" of "inserted devices" such as catheters and other inserted tools). *Id.* at 42–43 (citing Ex. 1003 ¶¶ 98–108). Moreover, according to Petitioner, the proposed modification "may seal more effectively across a wider range of diameters and shapes for the inserted devices than Schaffer's U-shaped actuating members." *Id.* (citing Ex. 1003 ¶¶ 99–100). Petitioner contends that, depending on the diameter and shape of the inserted device/tool, "Schaffer's U-shaped actuating members may form small gaps between the valve's lumen and the tool's outer surface." *Id.* (depicting alleged "gaps" and arguing "Hartley's string would not suffer from this potential issue") (citing Ex. 1006 ¶ 37 (disclosing Hartley's string can "close over a range of diameters of devices passed through the valve or can close down completely to be self-sealing"); Ex. 1003 ¶ 100); *see also id.* at 43 (arguing a "finite number of materials existed to select from to constrict a tubular member in a hemostasis valve in 2017" (citing Ex. 1003 ¶ 102)).

IMPERATIVE Ex. 1026
IPR Petititon - US 11,554,005

The image below illustrates Petitioner's proposed combination of Schaffer and Hartley.

Demonstrative Illustration
Schaffer + Hartley's String

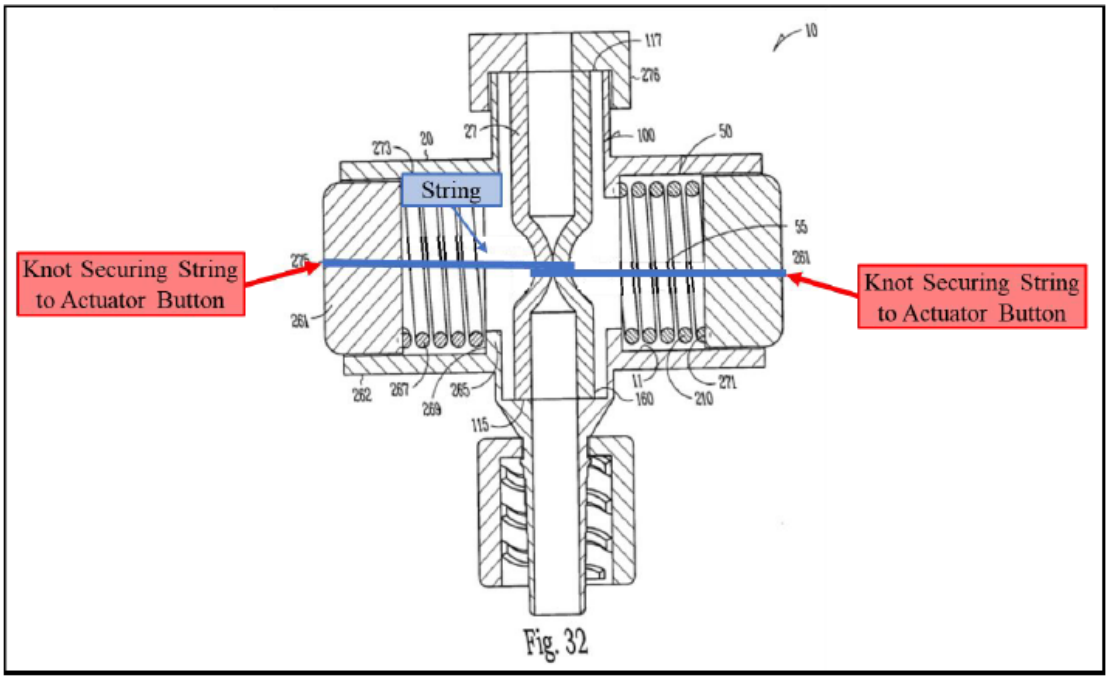

Pet. 43–45. The above image is a demonstrative that shows Schaffer's valve (from Schaffer's Figure 32) modified to substitute the U-shaped actuating members for Hartley's flexible string (blue highlight), which loops around the outer wall of a portion of seal module 100. *Id.* (citing Ex. 1003 ¶¶ 103–108; Ex. 1006 ¶ 31). Petitioner contends that, by a simple technique taught in Hartley, the string may be secured at the string's ends (e.g., by knots) to the respective actuator buttons of Schaffer (red highlights). *Id.*

Petitioner argues the skilled artisan would have reasonably expected success with the proposed modification. Petitioner contends, for example, that Hartley's string would function in a similar way to Schaffer's actuating members—collapsing the central lumen when the string is pulled in opposing directions and, when the buttons are pressed, the released tension

loosens the string so the lumen can reopen. *Id.* at 43–46 (citing, e.g., Ex. 1005 ¶¶ 54, 77, 81; Ex. 1006 ¶¶ 31, 34, 37; Ex. 1003 ¶¶ 103–108 (testifying, *inter alia*, a POSA would reasonably have expected Schaffer's seal module would have the resilience needed to return to an open configuration when tension on the string is released and a constricting force is no longer applied, and, if necessary, that it would have been obvious to select components that provide appropriate resiliency)).

We find Petitioner's argument and evidence summarized above sufficient, at this stage, to support the rationale for modifying Schaffer in view of Hartley as proposed with a reasonable expectation of success, and to explain where each of claim 1's limitations is taught or suggested in the combination of Schaffer and Hartley. We address Patent Owner's counterarguments below.

Patent Owner argues the proposed combination of Schaffer and Hartley is no "simple substitution." Prelim. Resp. 35–43. According to Patent Owner, the combination replaces Schaffer's two U-shaped actuating members (each attached to a separate actuator button) with Hartley's single string, which string would be connected to Schaffer's two opposed actuator buttons. *Id.* Patent Owner contends that neither Hartley nor Eller teaches such an arrangement because the ends of Hartley's string are attached to oppositely-disposed portions of a single rotary actuator and Eller's wire has one end attached to an actuator and another end attached to the valve's housing. *Id.* (citing, e.g., Ex. 1006, Fig. 3; Ex. 1007, Fig. 20). Thus, Patent Owner argues, the asserted references do not disclose "any [single] element" that is attached to separate actuators. *Id.* at 42–43 (arguing Petitioner's modification adds complexity) (citing Ex. 2001 ¶¶ 95, 152).

IMPERATIVE Ex. 1026
IPR Petititon - US 11,554,005

This argument is unavailing on the present record. Patent Owner's argument invokes an obviousness standard that is stricter than what the law requires. Indeed, when obviousness is the issue, "[t]he question is not whether the prior art disclosed the very thing claimed; it is whether, in light of the prior art, the claimed invention would have nonetheless been *obvious* to a person of ordinary skill in the art as of the relevant date." *Masimo Corp. v. Apple Inc.*, No. 2022-1894, 2024 WL 111647 at * 3 (Fed. Cir. Jan. 10, 2024) (explaining, "it suffices . . . 'that a person of ordinary skill in the art would have been motivated to combine the prior art in a way such that the combination discloses the claim limitation'") (quoting *Fleming v. Cirrus Design Corp.*, 28 F.4th 1214, 1222 (Fed. Cir. 2022)). Schaffer's two actuating members apply a constricting force to the valve's seal module when pulled by opposing spring-actuated buttons; replacing those members with a single string (or wire) would provide substantially the same function and meet the claim language. That is also similar to the constricting function Hartley's string (or Eller's wire) provides in those references—even if attached in preferred embodiments to the valve in somewhat different ways that allow the string/wire to be pulled at its ends and placed under tension.[16] And, at this stage, Petitioner's evidence supports a determination that a POSA would have regarded the proposed change as involving a

[16] Reflecting the skilled artisan's knowledge and design capabilities, Eller, for example, indicates that a flexible constricting wire can be attached to an actuator or housing by a variety of techniques (e.g., adhesives, welding, fusing, friction fit) and that its teachings can be applied to "any suitable actuator" (e.g., rotatable, linear, slidable, etc.). Ex. 1007, 8:27–44, 14:37–53; *see also* Ex. 1006 ¶ 32 (attachment via knots).

IMPERATIVE Ex. 1026
IPR Petititon - US 11,554,005

relatively straightforward substitution of a known, alternative feature for constricting a hemostasis valve lumen.[17]

Patent Owner argues that a POSA would not have been motivated to substitute Hartley's string for Schaffer's U-shaped actuating members. Prelim. Resp. 47–60. Whether a skilled artisan would have been motivated to combine the art's teachings with a reasonable expectation of success in arriving at the claimed subject matter is a highly fact-intensive inquiry. *Alza Corp. v. Mylan Labs., Inc.*, 464 F.3d 1286, 1289 (Fed. Cir. 2006) ("The presence or absence of a motivation to combine references in an obviousness determination is a pure question of fact"); *Par Pharm., Inc. v. TWi Pharma., Inc.*, 773 F.3d 1186, 1196 (Fed. Cir. 2014) ("The presence or absence of a reasonable expectation of success is also a question of fact[.]"). The motivation issues raised by Patent Owner, for which we provide our preliminary views below, are better resolved on a complete trial record.[18]

Patent Owner argues that Petitioner concocts a reason to substitute Hartley's string for Schaffer's U-shaped actuating members when no such reason exists. Prelim. Resp. 43–50. According to Patent Owner, Schaffer discloses (and Petitioner allegedly admits) that Schaffer's *unmodified* valve provides a "complete" and "gapless" seal that can prevent leaks. *Id.* (citing,

---

[17] "[T]he fact that it would take some creativity to carry out the combination does not defeat a finding of obviousness." *Facebook, Inc. v. Windy City Innovations, LLC*, 973 F.3d 1321, 1343 (Fed. Cir. 2020).

[18] Patent Owner's arguments against the reasons for combining Schaffer and Hartley (or Eller) in this IPR are similar to arguments raised in the related 1157 IPR, which arguments we found did not overcome Petitioner's threshold institution showing. As here, we determined that such arguments (if preserved by Patent Owner through trial) should be resolved on a fully-developed evidentiary record. IPR2024-01157, Paper 7 at 33–41.

IMPERATIVE Ex. 1026
IPR Petititon - US 11,554,005

e.g., Ex. 1005 ¶¶ 59, 68, Figs. 16–19; Ex. 1003 ¶ 100). So, Patent Owner contends, there is no problem to be solved by swapping Schaffer's actuating members for Hartley's string and, thus, no motivation for the skilled artisan to make that change. *Id.*

Patent Owner's argument about an alleged absence of any reason to modify the prior art is unavailing at this time. Petitioner argues that Hartley's flexible string would provide a more fluid-tight seal around irregularly-shaped tools compared to Schaffer's allegedly rigid actuating members because, when constricting, this string can more dynamically and precisely adjust to the outer contours of inserted tools. Pet. 42–43 (Ex. 1006 ¶ 37; Ex. 1003 ¶¶ 99–100). Although Schaffer does disclose, for example, a use of certain materials for portions of a seal module that provide "a nearly fluid/gas tight seal" and "exhibit[] a 'selfclosing' nature," those disclosures concern only *some embodiments*, using *optional* features. *See, e.g.*, Ex. 1005 ¶¶ 59 (teaching, "[i]n one embodiment," a seal module may include a "third central seal member" that, in an "option," "is extremely soft and compliant and intrinsically 'sticky'" such that it can be compared to "a gelatinous substance" that "sticks occlusively to itself" and, thus, is "selfclosing"), 69 (disclosing, in one embodiment, use of a third central seal member made of a material "so compliant" it can seal around irregularly-shaped instruments).

The valve of Schaffer's Figures 30–34 does not require a seal module that includes the above-described optional third seal member with an extremely compliant, soft, gelatinous, self-closing material. *Id.* ¶ 75 ("The seal module 100 [of the embodiment of the valve shown in Figs. 30–34] is formed of one or more seal members" and "[i]n another option, the seal module 100 and/or any of its respective seal members can be formed of one

IMPERATIVE Ex. 1026
IPR Petititon - US 11,554,005

or more materials.").[19] On this record, Schaffer's broader teachings lend support to Petitioner's position that substituting a flexible string may provide a sealing benefit in the modified valve. *Merck & Co., Inc. v. Biocraft Labs., Inc.*, 874 F.2d 804, 807 (Fed. Cir. 1989) ("[I]n a section 103 inquiry, the fact that a specific [embodiment] is taught to be preferred is not controlling, since all disclosures of the prior art, including unpreferred embodiments, must be considered.") (internal quotation marks omitted); *Belden Inc. v. Berk-Tek LLC*, 805 F.3d 1064, 1076 (Fed. Cir. 2015) (holding the prior art "must be considered for everything it *teaches* by way of technology and is not limited to the particular *invention* it is describing and attempting to protect.") (internal quotation marks omitted).

Patent Owner argues that substituting Hartley's string for Schaffer's U-shaped actuating members would prevent "forcible disengagement" and, thus, change Schaffer's principle of operation. Prelim. Resp. 50–52 (citing Ex. 2001 ¶¶ 134–136). Patent Owner cites a teaching in Schaffer that, by pressing the spring-actuated buttons, "such movement allows each engaging actuating member 55 to forcibly disengage opposing outer walls 27 of the seal module 100 allowing the portion 108 of the containment structure 160 to retract to an uncollapsed configuration where gases and fluids can pass therethrough." *Id.* (citing Ex. 1005 ¶ 80). With Petitioner's modification,

[19] Petitioner's declarant Mr. Thornton testifies that the portions of Schaffer referenced by Patent Owner "refer to embodiments of the valve having three portions where one of the portions can optionally be made" from the sticky substance, yet Schaffer discloses many other materials that could make up the seal module (e.g., modified vinyl, silicone) that would not have such characteristics. Ex. 1003 ¶ 100; Ex. 1005 ¶ 59.

IMPERATIVE Ex. 1026
IPR Petititon - US 11,554,005

Patent Owner argues, Hartley's string "would never disengage—let alone forcibly disengage—Schaffer's seal module." *Id.* (citing Ex. 2001 ¶ 135).

We are unpersuaded at this stage that Schaffer's "principle of operation" is altered in a manner that undercuts the alleged obviousness of claim 1. Although a structural change is proposed (common where obviousness is at issue), the valve's operation and purpose is (at least arguably) materially unchanged in the modified Schaffer valve. Schaffer's valve, modified to include a flexible string, selectively opens and closes a central lumen via the actuation of buttons and by application of force and constriction, much like the unmodified Schaffer valve. That is true even if we accept the notion that Hartley's string would remain in partial contact with the outer wall of the seal module when the buttons are pressed (albeit not under tension that would otherwise constrict the valve). Schaffer includes examples where the actuating members may "forcibly disengage" the seal module, "allowing" the seal module to "retract to an uncollapsed configuration where gases and fluids can pass therethrough." Ex. 1005 ¶¶ 77, 80. But Mr. Thornton testifies the release of the tension/force on a flexible string in the proposed modification yields the same result—with the seal module passively returning to an open configuration. Ex. 1003 ¶¶ 101–108. Schaffer expressly and more broadly teaches that the seal member may be sized and configured to maintain an open lumen when no compressive force is applied (Ex. 1005 ¶ 54) and we do not see how that would require "forcible disengagement" as interpreted by Patent Owner.[20] In other words,

[20] The parties' declarants disagree about what the phrase "forcibly disengage" means and its significance to Schaffer's overall disclosure. *See, e.g.*, Ex. 1003 ¶ 89 (testifying the phrase refers to the act of applying force to the buttons to release tension placed by the actuating members against the

IMPERATIVE Ex. 1026
IPR Petititon - US 11,554,005

we question whether Patent Owner is highlighting a structural distinction that confers no material difference in the operation or purpose of the valve.[21]

Further to Patent Owner's argument that Petitioner's proposed modification would prevent forcible disengagement, Patent Owner contends the modification would "render[] Schaffer's valve inoperable by inhibiting or even preventing" movement of the seal module from the closed to the open position. Prelim. Resp. 52. More specifically, Patent Owner contends "the seal module would stick to and retain Hartley's string or Eller's wire in the closed position." *Id.*

We disagree. First, this argument suggests Schaffer's valve must include a third central seal member comprising a sticky, gelatinous material. That is an *optional* feature, as we discussed above. Second, the argument is premised on Hartley's string looping around and being in direct contact with the (optional) sticky material. But that premise lacks support and does not account for Schaffer's teaching that the seal module includes a collapsible

---

seal module); Ex. 2001 ¶ 135 (seemingly interpreting "forcibly disengage" to require the actuating members move out of physical contact with the seal module, versus "Hartley's string [that] would remain in contact with and never disengage the seal module 100"). We will revisit, as necessary, on a fully-developed evidentiary record.

[21] The parties may, as appropriate, consider providing further argument and evidence concerning how Schaffer's "principle of operation" or "intended purpose" should be defined. *See, e.g.*, *Plas-Pak Indus., Inc. v. Sulzer Mixpac AG*, 600 Fed. App'x 755, 758–760 (Fed. Cir. Jan. 27, 2015) (noting, e.g., aspects of the art's disclosures that may be relevant to such definitions); *Trivascular, Inc. v. Samuels*, 812 F.3d 1056, 1068–69 (Fed. Cir. 2016) (affirming the Board's finding of a lack of motivation to combine where a primary reference "taught away from substituting only the barbs, since the barbs were the primary objective of the reference, allowing the stent to be anchored to the vessel").

IMPERATIVE Ex. 1026
IPR Petititon - US 11,554,005

"tubular containment structure 160" that contains and surrounds the seal member materials. *See, e.g.*, Ex. 1008 ¶¶ 58, 60, 63, 77, Figs. 12–13, 16 (depicting tubular containment structure 160 surrounding third central seal member 165), 32, 34 (depicting containment structure 160, which appears to be the portion of the seal module100 in direct contact with actuating members 55). Even if a "sticky" third seal member material were required in Schaffer's valves, we see no basis to find that Schaffer's actuating members—or a substituted string of Hartley—must directly contact that sticky material instead of the tubular containment structure that surrounds such material.

Patent Owner contends Mr. Thornton "conceded . . . the seal module would stick to and retain Hartley's string." Prelim. Resp. 51 (citing Ex. 1003 ¶ 100). We do not agree with that interpretation of Mr. Thornton's testimony, which is, for example, that "[a] seal module made of the 'sticky' or 'gelatinous' materials would not easily return to its uncollapsed configuration." Ex. 1003 ¶ 100. We understand Mr. Thornton to be referring to that sticky material's capacity to stick to itself within the lumen and thus be "selfclosing" as described in Schaffer (Ex. 1005 ¶ 59), not that it would be in direct contact with and stick to Hartley's string or, for that matter, Schaffer's actuating members. In that context, and consistent with Mr. Thornton's testimony, such sticky material could resist the seal module retracting to its open position when a constricting force is released—whether that force is otherwise provided by a string or a U-shaped actuating member.

Patent Owner next argues that Petitioner's proposed modification would compromise the durability of the valve and make it harder to manufacture and assemble it. Prelim. Resp. 52–58. For example, Patent Owner argues that Schaffer's U-shaped actuating members are rigid and can

IMPERATIVE Ex. 1026
IPR Petititon - US 11,554,005

be made by machining, which provides for a simpler way of assembling the valve where the seal module can be inserted into the housing and through a gap between the rigid actuating members while the respective buttons are pushed. *Id.* (citing, e.g., Ex. 1005 ¶¶ 82–83; Ex. 2001 ¶¶ 126–129 (testifying that substituting Hartley's string as proposed would make this assembly method impossible or unduly complicated)). Thus, Patent Owner, argues, Petitioner's proposed change to the valve of Schaffer undermines the valve's intended function and principle of operation. *Id.* at 57–58.

Patent Owner's arguments do not, on this record, undercut Petitioner's showing needed to meet the standard at institution. The methods cited by Patent Owner appear to relate to examples or optional techniques in Schaffer for making the valve. *See, e.g.*, Ex. 1005 ¶¶ 81–83. Petitioner also provides testimony from Mr. Thornton that a skilled artisan would have been aware of various ways to assemble the modified valve, such as using a "tapered fixture" to introduce a seal module through looped strings. Ex. 1003 ¶ 101. During trial, the parties may develop additional evidence and argument about the importance of the manufacturing and assembly techniques cited by Patent Owner, and whether those techniques are incompatible with Petitioner's proposed modification to such an extent that a POSA, through the exercise of ordinary skill, could not address such concerns. *In re ICON Health & Fitness, Inc.*, 496 F.3d 1374, 1382 (Fed. Cir. 2007) (explaining that arguments of inoperability must not "ignore the modifications that one skilled in the art would make to a device borrowed from the prior art").[22]

---

[22] If there may be downsides to Petitioner's proposed combination as argued by Patent Owner, the parties may consider developing further evidence relevant to weighing the overall benefits gained and lost. *Allied Erecting and Dismantling Co. v. Genesis Attachments, LLC*, 825 F.3d 1373, 1381

IMPERATIVE Ex. 1026
IPR Petititon - US 11,554,005

Lastly, Patent Owner argues that, even assuming there was a need for a better seal or avoidance of gaps in Schaffer's valve, Petitioner does not explain why the POSA would not have pursued "simple modifications" versus the "complete redesign" as proposed. Prelim. Resp. 58–60. Patent Owner argues, for example, that a POSA could have adjusted the resilience or compressibility of the sealing module materials, or adjusted the spring strength to apply additional force. *Id.* (citing Pet. 71–72).

Patent Owner's argument is, at this stage, unavailing. The argument presumes the obviousness inquiry ends at a problem's simplest solution. That is incorrect. A petitioner need not show a motivation to pursue only a best or most obvious solution. *In re Fulton*, 391 F.3d 1195, 1200 (Fed. Cir. 2004) ("[O]ur case law does not require that a particular combination must be the preferred, or the most desirable, combination described in the prior art in order to provide motivation for the current invention."); *Intel Corp. v. Qualcomm Inc.*, 21 F.4th 784, 800 (Fed. Cir. 2021) ("[It is] not necessary to show that a combination is the *best* option, only that it be a *suitable* option.") (internal quotation marks omitted). And, for reasons noted above, we are not persuaded on this record that Petitioner's proposed modification would

---

(Fed. Cir. 2016) ("Although modification of the movable blades may impede the quick change functionality disclosed by [the asserted prior art], '[a] given course of action often has simultaneous advantages and disadvantages, and this does not necessarily obviate motivation to combine'" (quoting *Medichem, S.A. v. Rolabo, S.L.*, 437 F.3d 1157, 1165 (Fed. Cir. 2006) (citation omitted)). "The fact that the motivating benefit comes at the expense of another benefit, however, should not nullify its use as a basis to modify the disclosure of one reference with the teachings of another. Instead, the benefits, both lost and gained, should be weighed against one another." *Winner Int'l Royalty Corp. v. Wang*, 202 F.3d 1340, 1349 n.8 (Fed. Cir. 2000).

IMPERATIVE Ex. 1026
IPR Petititon - US 11,554,005

materially change the principle of operation of Schaffer's valve or render it inoperable for its intended purpose.

Based on this preliminary record, we determine there is a reasonable likelihood that Petitioner will prevail in showing that at least claim 1 is unpatentable under Grounds 3 and 4.

G. Remaining Grounds

We provide the observations below about the remaining grounds: Grounds 2 and 5–7.

Petitioner alleges that claims 1–9 would have been obvious over Schaffer alone (Ground 2) or over the combination of Schaffer and Garrison (Ground 5). Pet. 21. The Petition provides no separate analysis under Ground 2—apparently resting on the contention that Schaffer anticipates the claims. Thus, on this record, Ground 2 challenge carries at least the same flaws identified above for Ground 1. Prelim. Resp. 31 ("Petitioner does not allege that it would have been obvious for a POSA to have modified Schaffer alone to arrive at those limitations of Claim 1 [(e.g., a 'first filament formed into a loop,' etc.)"]).[23] The same is true for Ground 5, which combines Schaffer with Garrison but identifies no disclosure in Garrison of the limitations of claim 1 that Patent Owner argues are absent in

[23] As we noted above (*supra* n.15), Petitioner's assertion (Pet. 36) that Schaffer is "inconsistent" with "rigid" actuating members is a position undeveloped in the Petition; also, this barebones assertion does not constitute separate argument under Ground 2 that a POSA would have been motivated to modify Schaffer's actuating members based on Schaffer alone (e.g., to make such members flexible versus rigid). *Netflix, Inc. v. DivX, LLC*, 84 F.4th 1371, 1382 (Fed. Cir. 2023) ("It was reasonable for the Board to consider only the theory encapsulated in the plain words of [the Petition] and decline to discern another theory from the citations alone.").

IMPERATIVE Ex. 1026
IPR Petititon - US 11,554,005

Schaffer. Pet. 83–91 (arguing that it would have been obvious to use Schaffer's valve on Garrison's aspiration catheter system); Prelim. Resp. 60 ("Petitioner does not rely on Garrison for disclosing any of the hemostasis valve structural limitations of Claim 1.").

Petitioner alleges that claims 1–9 would have been obvious over Schaffer, Hartley, and Garrison (Ground 6) or Schaffer, Eller, and Garrison (Ground 7). These grounds rely on Petitioner's contentions related to the combinations of Schaffer with either Hartley or Eller (Grounds 3 and 4) with the further addition of Garrison and its teachings of using hemostasis valves with aspiration catheters (in the event claim 1's preamble reciting an "aspiration catheter" is limiting). Pet. 83–94. Patent Owner raises no distinct argument against Grounds 6 and 7 beyond what it argued for Grounds 3 and 4, which argument is unavailing at this time as we explained above. Prelim. Resp. 60–61.

IV. CONCLUSION

Based on this preliminary record, we determine that Petitioner has shown a reasonable likelihood that it will prevail with respect to at least one of the claims challenged in the Petition. We institute trial on all challenged claims under the grounds raised in the Petition. *PGS Geophysical AS v. Iancu*, 891 F.3d 1354, 1360 (Fed. Cir. 2018) (explaining that institution of *inter partes* review "require[s] a simple yes-or-no institution choice . . . embracing all challenges included in the petition"); 37 C.F.R. § 42.108(a).

Any argument not raised in a Patent Owner Response to the Petition, or as permitted in another manner during trial, shall be deemed forfeited and/or waived even if asserted in the Preliminary Response. *In re Google Tech. Holdings LLC*, 980 F.3d 858, 862–864 (Fed. Cir. 2020) (holding an argument forfeited when not timely raised before the Board); *In re*

IMPERATIVE Ex. 1026
IPR Petititon - US 11,554,005

NuVasive, Inc., 842 F.3d 1376, 1380–81 (Fed. Cir. 2016) (holding Patent Owner waived an argument addressed in the Preliminary Response by not raising the same argument in the Patent Owner Response).

V. ORDER

In consideration of the foregoing, it is hereby:

ORDERED that, pursuant to 35 U.S.C. § 314(a), *inter partes* review of all challenged claims of the ’012 patent is instituted on the grounds of unpatentability set forth in the Petition; and

FURTHER ORDERED that, pursuant to 35 U.S.C. § 314(a) and 37 C.F.R. § 42.4, notice is given of institution of trial commencing on the entry date of this Decision.

IMPERATIVE Ex. 1026
IPR Petititon - US 11,554,005

FOR PETITIONER:

Joshua J. Stowell
Joseph R. Re
Brian C. Barnes
KNOBBE, MARTENS, OLSON & BEAR, LLP
Joshua.Stowell@knobbe.com
Joe.Re@knobbe.com
Brian.Barnes@knobbe.com

FOR PATENT OWNER:

Joseph Hamilton
Paul Parker
PERKINS COIE LLP
hamilton-ptab@perkinscoie.com
parker-ptab@perkinscoie.com

IMPERATIVE Ex. 1026
IPR Petititon - US 11,554,005