Trials@uspto.gov
571-272-7822

Paper: 10
Date: February 7, 2025

UNITED STATES PATENT AND TRADEMARK OFFICE

BEFORE THE PATENT TRIAL AND APPEAL BOARD

IMPERATIVE CARE, INC.,
Petitioner,

v.

INARI MEDICAL, INC.,
Patent Owner.

IPR2024-01257
Patent 11,744,691 B2

Before JEFFREY N. FREDMAN, ERIC C. JESCHKE, and TIMOTHY G. MAJORS, *Administrative Patent Judges.*

MAJORS, *Administrative Patent Judge*.

DECISION
Denying Institution of *Inter Partes* Review
35 U.S.C. § 314

I. INTRODUCTION

Imperative Care, Inc. ("Petitioner") filed a Petition (Paper 2, "Pet.") requesting *inter partes* review of claims 1–31 of U.S. Patent No. 11,744,691 B2 (Ex. 1001, "the '691 patent"). Pet. 1, 23. Inari Medical, Inc. ("Patent Owner") filed a Preliminary Response (Paper 6, "Prelim. Resp."). With our prior authorization (Ex. 3001), Petitioner filed a Preliminary Reply (Paper 8) and Patent Owner filed a Preliminary Sur-Reply (Paper 9), and those additional authorized papers address arguments that the Petition should be denied on a discretionary basis.

Under 35 U.S.C. § 314(a), an *inter partes* review may not be instituted unless it is determined that there is a reasonable likelihood that the petitioner will prevail with respect to at least one of the claims challenged in the petition. Based on the record here and for the reasons discussed below, we find that Petitioner has not demonstrated a reasonable likelihood that it will prevail in establishing that any of the challenged claims are unpatentable. We, therefore, do not institute *inter partes* review.

II. BACKGROUND

A. Real Parties-in-Interest

Petitioner identifies itself as the real party-in-interest. Pet. 89. Patent Owner identifies itself as the real party-in-interest. Paper 5, 2.

B. Related Matters

The parties identify the following lawsuit involving assertion of the '691 patent (and additional patents): *Inari Medical Inc. v. Imperative Care, Inc.*, No. 24-cv-3117 (N.D. Cal.). Pet. 90; Paper 5, 2.

Patent Owner also identifies related matters before the Board. Paper 5, 2–3. Specifically, Patent Owner identifies IPR2025-00156 as challenging the claims of U.S. Patent No. 11,697,012 and IPR2024-01157 as

IMPERATIVE Ex. 1030
IPR Petititon - US 11,554,005

challenging the claims of U.S. Patent No. 11,697,011. *Id.* Both IPR2025-00156 and IPR2024-01157 were filed by Petitioner and are "not related by priority to the involved '691 [p]atent but may involve related issues." *Id.*

Patent Owner further identifies additional patents and applications as being related by a priority claim to the '691 patent. *Id.* at 2 (identifying, e.g., U.S. Patent Nos. 11,890,180; 11,969,332; 11,974,909; and 11,989,382). Patent Owner states that the following lawsuit involves these patents: *Inari Medical, Inc. v. Inquis Medical, Inc.*, No. 24-1023-CFC (D. Del.). *Id.*

C. The '691 patent (Ex. 1001)

The '691 patent is titled "System for Treating Embolism and Associated Devices and Methods." Ex. 1001, code (54). The '691 patent issued September 5, 2023, from an application filed March 7, 2023. *Id.* at codes (22), (45). The patent claims the priority benefit of non-provisional applications and provisional applications, the earliest of which was filed August 13, 2018. *Id.* at code (60), (63).

The '691 patent describes "devices for the intravascular treatment of emboli and/or thrombi within a blood vessel of a human patient." *Id.* at 1:24–26. "Thromboembolic events are characterized by an occlusion of a blood vessel" and [t]hromboembolic disorders . . . are a major cause of morbidity and mortality." *Id.* at 1:32–33. The patent states that "[b]lood clots can develop in the large veins of the legs and pelvis, a common condition known as deep venous thrombosis (DVT)." *Id.* at 1:46–48.

According to the '691 patent, "[v]arious devices exist for performing a thrombectomy or removing other foreign material," but "such devices have been found to have structures which are either highly complex, cause trauma to the treatment vessel, or lack the ability to be appropriately fixed against the vessel." *Id.* at 2:33–37. Although "[l]ess complex devices may allow

IMPERATIVE Ex. 1030
IPR Petititon - US 11,554,005

the user to pull through the clot, particularly with inexperienced users, [] such devices may not completely capture and/or collect all of the clot material." *Id.* at 2:42–44. Thus, according to the patent, "there exists a need for improved systems and methods for embolic extraction." *Id.* at 2:45–46.

The '691 patent discloses that "a catheter can be intravascularly positioned within a blood vessel such that a distal portion (e.g., a distal opening) of the catheter is positioned proximate to clot material within the blood vessel." *Id.* at 4:19–23. According to the patent, "[t]he catheter can be fluidly coupled to a pressure source via a valve or other fluid control device positioned outside of the patient," and "[w]ith the valve closed, the pressure source can be activated to charge a vacuum chamber of the pressure source with a vacuum." *Id.* at 4:23–27. The patent further discloses that, in embodiments, the pressure source may be configured to generate a vacuum and store the vacuum before the pressure source is fluidly connected to the catheter. *Id.* at 4:34–37. Moreover, the patent explains, "[p]re-charging or storing the vacuum before applying the vacuum to the catheter can generate greater suction forces . . . to aspirate or otherwise remove clot material from within a blood vessel of a human patient." *Id.* at 4:42–44, 4:48–50. The patent explains that the disclosed embodiments may be used for treating pulmonary embolism (PE), cerebral embolism, and DVT. *Id.* at 4:42–58.

We reproduce below the '691 patent's Figure 9C including annotations provided by Petitioner. Pet. 15 (Ex. 1001, Fig. 9C (annotated by Petitioner)); Ex. 1001, 18:42–45, 19:1–6, Fig. 9C.

IMPERATIVE Ex. 1030
IPR Petititon - US 11,554,005

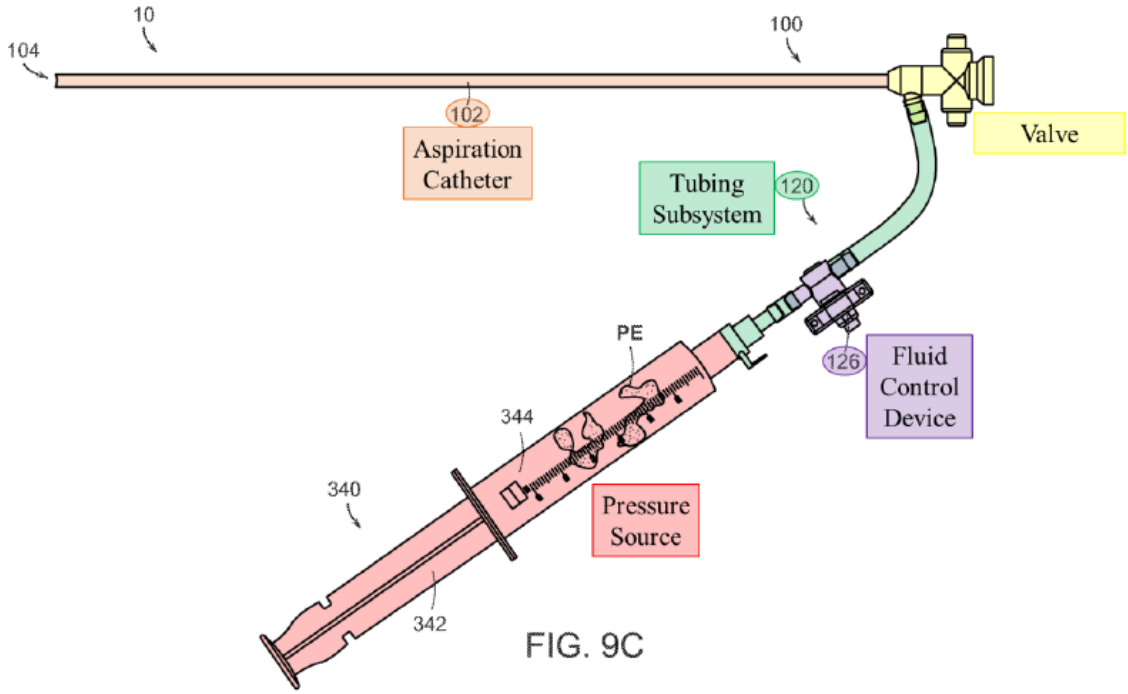

FIG. 9C

Figure 9C, as depicted above, is a side view of a proximal portion of a clot removal system using a locking syringe as described in the '691 patent. Ex. 1001, 3:19–21. Aspiration assembly 10 includes catheter subsystem 100, tubing subsystem 120 (green highlights), and a pressure source (red highlights). *Id.* at 5:24–28. Catheter subsystem 100 includes aspiration catheter 102 comprising an elongated shaft defining lumen 104 (orange highlights) and a valve (yellow highlights). *Id.* at 5:29–32. In this embodiment, tubing subsystem 120 can include one or more tubing sections (green highlights) and fluid control device stopcock 126 (purple highlights). *Id.* at 6:4–13. The pressure source may comprise vacuum-pressure locking syringe 340, which includes plunger 342 slidably and rotatably positioned within barrel 344. *Id.* at 8:18–24; *see also id.* at 7:33–38 (disclosing that, "[i]n some embodiments, the pressure source can be a pump (e.g., an electric pump coupled to a vacuum chamber) while, in other embodiments, the pressure source can include one or more syringes that can be actuated or

otherwise activated by a user of the assembly 10 to generate and store a vacuum therein").

The '691 patent explains that the user can actuate aspiration assembly 10 by twisting the handle of fluid control device 126 to open device 126 and apply a vacuum stored in syringe 340 to catheter subsystem 100. *Id.* at 18:42–45. Figure 9C illustrates syringe 340 and tubing subsystem 120 after fluid control device 126 has been opened to apply the vacuum stored in syringe 340 to catheter 102 with clot material PE visible in syringe 340. *Id.* at 19:2–6.

The '691 patent explains that, in the embodiment depicted in Figure 19, "primary syringe 340 of []pressure source 400 can be replaced with a simple pressure . . . volume, such as a canister, barrel, tube, etc.," e.g., secondary syringe 460. *Id.* at 12:40–44. The vacuum can be generated in the canister by cycling secondary syringe 460 one or more times. *Id.* at 12:44–46. We reproduce below Figure 19 including annotations provided by Petitioner. Pet. 16 (Ex. 1001, Fig. 19 (annotated by Petitioner)); Ex. 1001, 12:40–63, 31:1–24, Fig. 19.

IMPERATIVE Ex. 1030
IPR Petititon - US 11,554,005

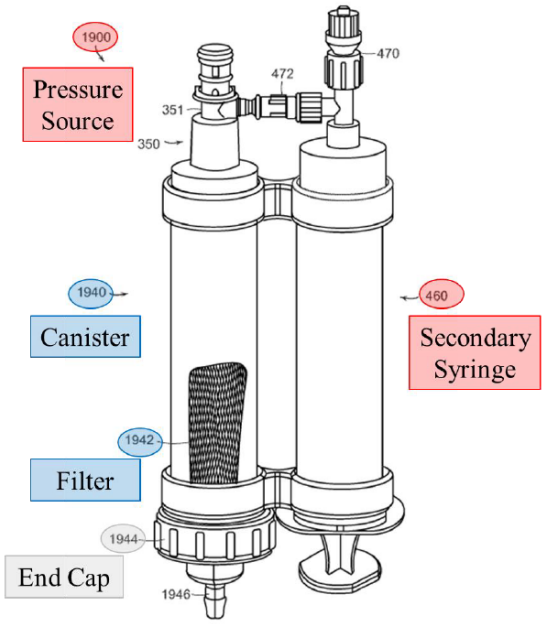

FIG. 19

Figure 19, as depicted above, is a perspective side view of a pressure source for filtering blood from aspirated clot material during a clot removal procedure as described in the '691 patent. Ex. 1001, 3:51–53. Pressure source 1900 (red highlight) includes secondary syringe 460 (red highlight) and first and second one-way valves 470 and 472. Ex. 1001, 31:8–9. Figure 19 above shows secondary syringe 460 coupled to canister 1940, which includes a tip coupled to adaptor 350. *Id.* at 31:9–12. Canister 1940 (blue highlight) is configured to be removably positioned within connector 128 of tubing subsystem 120 (Figure 1 (not shown in Fig. 19 above)) to fluidly couple canister 1940 to tubing subsystem 120. *Id.* at 31:13–15. As the '691 patent explains, in embodiments, canister 1940 further includes filter 1942 (blue highlight), which is coupled to and/or covers a removable end cap 1944 (gray highlight) having blood separation port 1946. *Id.* at 31:20–24.

D. Illustrative Claims

Petitioner challenges claims 1–31. Claims 1, 14, 23, and 28 are the only independent claims. Claim 1 is illustrative and reads:

> 1. [preamble [1]] An aspiration system with accelerated response, comprising:
>
> [1A] an aspiration pump in communication with a first chamber;
>
> [1B] a coupled assembly including:
>
> an aspiration catheter configured for placement into fluid communication with the first chamber by way of an aspiration tube;
>
> a second chamber in between the aspiration pump and the aspiration catheter; and
>
> a hemostasis valve; and
>
> [1C] a user-actuatable valve between the second chamber and the aspiration catheter,
>
> [1D] wherein the valve is configured to be closed while negative pressure is generated in the first and second chambers, and wherein the valve is configured to be opened after the negative pressure is generated in the first and second chambers;
>
> [1E] wherein upon user actuation to open the valve with the negative pressure having been generated in the first and second chambers, fluid flow at least partially from the second chamber into the first chamber causes rapid aspiration into the second chamber.

Ex. 1001, 35:43–64 (formatting modified and brackets added corresponding to Petitioner's labeling of elements of claim 1).

Independent claims 14, 23, and 28 include substantively the same limitations as claim 1 except as follows: claims 14 and 28 specify that the second chamber is "removably coupled" between the aspiration pump and aspiration catheter; claim 23 adds certain features related to the "hemostasis valve" (e.g., reciting a "filament" that extends at least partially around a "tubular member"). *Id.* at 36:38–59, 37:15–48, 38:15–37. Any other differences in the language of the independent claims are minor and, as Petitioner notes, do not "meaningfully differentiate" claims 14, 23, and 28 from claim 1. *See* Pet. 83.

IMPERATIVE Ex. 1030
IPR Petititon - US 11,554,005

E. Prior Art and Asserted Grounds

Petitioner asserts that claims 1–31 are unpatentable based on the following grounds:

Ground	Claims Challenged	35 U.S.C. §[1]	Reference(s)/Basis
1	1, 2, 5, 6, 10, 11, 13	102	Garrison[2]
2	1, 2, 4–6, 9–20, 28–30	103	Garrison
3	3, 23, 25–27	103	Garrison, Hartley[3]
4	4, 9, 11, 12, 14–20, 28–30	103	Garrison, Goff[4]
5	7, 8, 21, 22, 31	103	Garrison, Aklog[5]
6	24	103	Garrison, Aklog, Hartley
7	21, 22, 31	103	Garrison, Aklog, Goff
8	25, 26	103	Garrison, Hartley, Goff

[1] The Leahy-Smith America Invents Act ("AIA"), Pub. L. No. 112–29, 125 Stat. 284, 285–88 (2011), revised 35 U.S.C. §§ 102, 103 effective March 16, 2013. Based on the uncontested assertion that August 13, 2018, is the earliest possible priority date for the '691 patent, we apply the AIA versions of §§ 102 and 103 in this Decision. Pet. 20.

[2] Garrison, US 2015/0173782 A1, published June 25, 2015 (Ex. 1006 ("Garrison")).

[3] Hartley, US 2003/0116731 A1, published June 26, 2003 (Ex. 1008 ("Hartley")).

[4] Goff, WO 2006/124307 A2, published November 23, 2006 (Ex. 1007 ("Goff")).

[5] Aklog, US 8,734,374 B2, issued May 27, 2014 (Ex. 1005 ("Aklog")).

IMPERATIVE Ex. 1030
IPR Petititon - US 11,554,005

Petitioner also relies on testimony from Troy L. Thornton (Ex. 1003) and Dr. Aquilla S. Turk, III (Ex. 1022) in support of its challenge. In response, Patent Owner relies on testimony from Brian Brown. Ex. 2001.

III. ANALYSIS

A. Legal Standards

"In an [*inter partes* review], the petitioner has the burden from the onset to show with particularity why the patent it challenges is unpatentable." *Harmonic Inc. v. Avid Tech., Inc.*, 815 F.3d 1356, 1363 (Fed. Cir. 2016) (citing 35 U.S.C. § 312(a)(3)).

"Because the hallmark of anticipation is prior invention, the prior art reference—in order to anticipate under 35 U.S.C. § 102—must not only disclose all elements of the claim within the four corners of the document, but must also disclose those elements arranged as in the claim." *Net MoneyIN, Inc. v. VeriSign, Inc.*, 545 F.3d 1359, 1369 (Fed. Cir. 2008) (internal quotation marks omitted); *In re Gleave*, 560 F.3d 1331, 1334 (Fed. Cir. 2009) (explaining that, to anticipate, "each and every element of the claimed invention" must be "explicitly or inherently" disclosed in a single reference, and such elements "must be arranged or combined in the same way as in the claim") (internal citations and quotation marks omitted).

A claim is unpatentable as obvious if the differences between the claimed invention and the prior art are such that the claimed invention as a whole would have been obvious before the effective filing date of the claimed invention to a person having ordinary skill in the relevant art. 35 U.S.C. § 103; *see KSR Int'l Co. v. Teleflex Inc.*, 550 U.S. 398, 406 (2007). The question of obviousness is resolved on the basis of underlying factual determinations including: (1) the scope and content of the prior art; (2) any differences between the claimed subject matter and the prior art; (3) the level

IMPERATIVE Ex. 1030
IPR Petititon - US 11,554,005

of ordinary skill in the art; and (4) secondary considerations (i.e., objective indicia) of nonobviousness, when presented.[6] *Graham v. John Deere Co.*, 383 U.S. 1, 17–18 (1966). "An obviousness determination [also] requires finding both that a skilled artisan would have been motivated to combine the teachings of the prior art references to achieve the claimed invention, and that the skilled artisan would have had a reasonable expectation of success in doing so." *CRFD Rsch., Inc. v. Matal*, 876 F.3d 1330, 1340 (Fed. Cir. 2017) (internal quotation marks and citation omitted).

B. Level of Ordinary Skill in the Art

Petitioner proposes that the person of ordinary skill in the art ("POSA") in August 2018 "would have had an undergraduate degree in mechanical engineering or a related engineering discipline and 2–4 years of catheter design experience." Pet. 20 (citing Ex. 1003 ¶¶ 35–36). Patent Owner contends that Petitioner's proposal is "insufficient," yet Patent Owner provides no alternative definition of the POSA's qualifications and, instead, applies Petitioner's proposed definition. Prelim. Resp. 17.

We apply Petitioner's proposed POSA level for the purposes of this Decision, which level does not appear to be inconsistent with the prior art of record.

C. Claim Construction

In *inter partes* review, we construe claims using the same claim construction standard used to construe claims in a civil action before the courts under 35 U.S.C. § 282(b), including construing claim language in

[6] Petitioner states that it is not aware of any objective indicia of nonobviousness (Pet. 87) and Patent Owner's Preliminary Response does not provide any argument about objective indicia.

IMPERATIVE Ex. 1030
IPR Petititon - US 11,554,005

accordance with its ordinary and customary meaning as understood by a POSA, in view of the patent's specification and considering the patent's prosecution history. 37 C.F.R. § 42.100(b).

Petitioner proposes a claim construction for the term "filament," which term appears in some of the challenged claims (e.g., claims 3 and 23). Ex. 1001, 36:1–10, 37:15–48. Petitioner argues that a POSA "would have understood the claim term 'filament' to mean at least 'one or more threads, lines, cords, ropes, ribbons, flat wires, sheets, or tapes.'" Pet. 22 (quoting Ex. 1003 ¶¶ 51–59).

We need only construe the claims to the extent needed to resolve the controversy before us. *Realtime Data, LLC v. Iancu*, 912 F.3d 1368, 1375 (Fed. Cir. 2019). Patent Owner neither disputes Petitioner's proffered construction nor disputes Petitioner's contention that Hartley teaches a "filament" as claimed. *See, e.g.*, Pet. 41–43; Prelim. Resp. 17. We need not expressly construe the term "filament" or any other term for this Decision.

D. Asserted References

There is no present dispute that Garrison, Hartley, Goff, and Aklog are each prior art under 35 U.S.C. § 102(a)(1). Pet. 23.

1. Garrison (Ex. 1006)

Garrison is a U.S. patent application that published on June 25, 2015. Ex. 1006, code (43). Garrison is titled "Methods and Systems for Treatment of Acute Ischemic Stroke" and relates to a system for treating an artery, especially the cerebral arterial vasculature. *Id.* at Abstr., code (54); *see also id.* ¶¶ 2 ("[T]he present disclosure relates to methods and systems for transcarotid access of the cerebral arterial vasculature and treatment of cerebral occlusions."), 7 ("Disclosed are methods and devices that enable safe, rapid and relatively short transcarotid access to the cerebral and

IMPERATIVE Ex. 1030
IPR Petititon - US 11,554,005

intracranial arteries to treat acute ischemic stroke . . . [and] include one or more transcarotid access devices, catheters, and thrombectomy devices to remove the occlusion.”).

Garrison discloses embodiments having “aspiration and flow control elements configured to be used with an arterial access device, a guide catheter, and/or a catheter of the disclosed system.” *Id.* ¶ 130. An embodiment of Garrison’s system is shown in Figure 34 below, which figure includes Petitioner’s added labeling and color-coding. Pet. 4 (Ex. 1006, Fig. 34 (annotated by Petitioner)); Ex. 1006, Fig. 34.

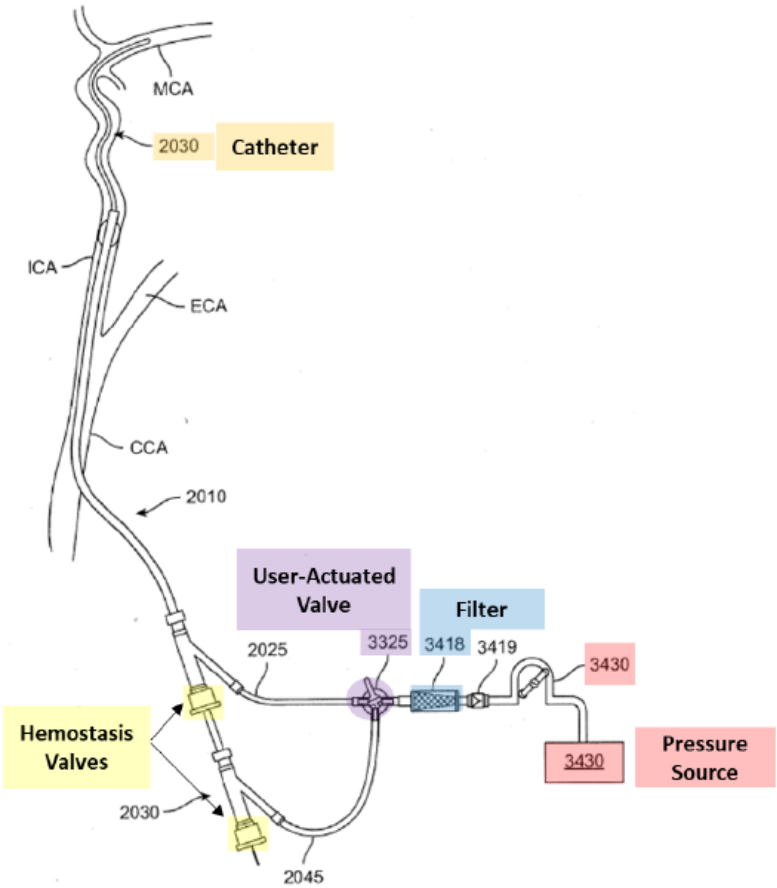

FIG. 34

Garrison’s Figure 34, above, “shows a system whereby both the arterial access device 2010 and catheter 2030 [(highlighted orange)] are connected to the same aspiration source 3430 [(labeled “Pressure Source” and

highlighted red)] via flow lines 2025 and 2045, respectively." Ex. 1006 ¶ 132. Garrison explains that valve 3325 (labeled "User-Actuated Valve" and highlighted purple) controls which device is connected to aspiration source 3430. *Id.* As shown above, Garrison further discloses that a "filter 3418 [(highlighted blue)] and/or a check valve 3419 may be coupled with flow line 2025." *Id.* Moreover, Garrison discloses that the system may include one or more additional valves (e.g., hemostasis valves (highlighted yellow)) such as shown in the annotated version of Figure 34 above. *See, e.g.*, *id.* ¶¶ 53, 62, Fig. 3 (showing proximal port 2015 with hemostasis valve).

As described in Garrison, "[t]he active source of aspiration may be an aspiration pump, a regular or locking syringe, a hand-held aspirator, hospital suction, or the like." *Id.* ¶ 134. Garrison discloses:

> In one embodiment, a locking syringe (for example a VacLok Syringe) is attached to the flow controller and the plunger is pulled back into a locked position by the user while the connection to the flow line is closed prior to the thrombectomy step of the procedure. During the procedure when the tip of the aspiration device (either the arterial access device or the catheter) is near or at the face of the occlusion, the user may open the connection to the aspiration syringe. This would enable the maximum level of aspiration in a rapid fashion with one user, something that is currently not possible with existing technologies.

Id.

2. Hartley (Ex. 1008)

Hartley is a U.S. patent application that published on June 26, 2003. Ex. 1008, code (43). Hartley is titled "Access Valve" and, in general, relates to an access valve for laparoscopic or intralumenal deployment devices. *Id.* at Abstr., code (54); *see also id.* ¶ 3 ("The invention will be discussed in . . .

IMPERATIVE Ex. 1030
IPR Petititon - US 11,554,005

relation to fluid flow prevention and access valves in medical applications for instance where it is desired to seal around a catheter or other instrument . . . to prevent loss of blood or other fluid.”).

Hartley’s Figures 3 and 4 are reproduced side-by-side below. Ex. 1008, Figs. 3–4.

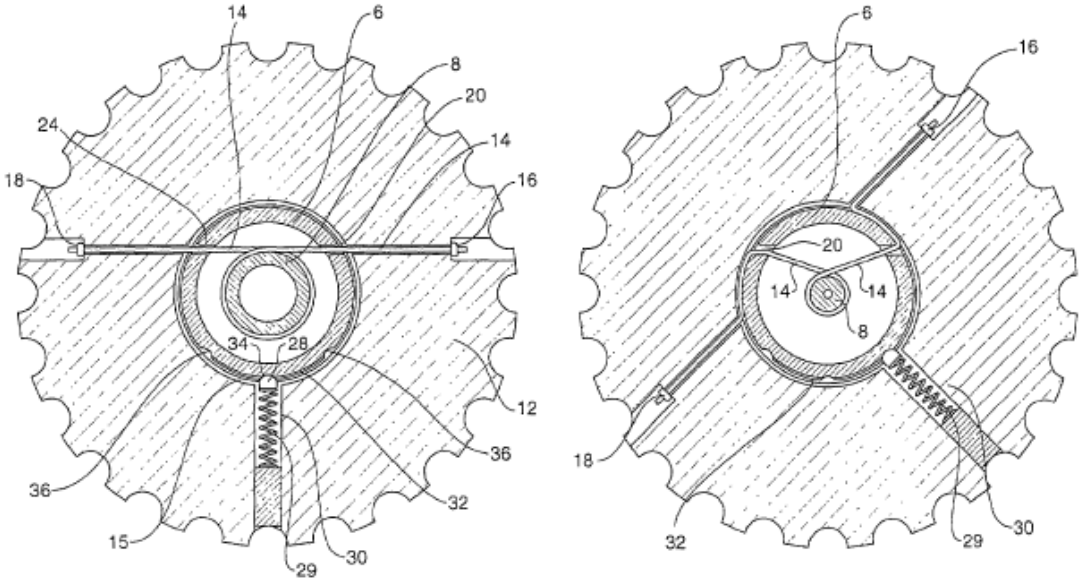

Fig 3 Fig 4

Figures 3 and 4 of Hartley are top, cross-sectional views of a constriction valve, showing, respectively, the valve in an open and closed configuration. *Id.* ¶¶ 27–28, 31–34. In the open configuration (above left), rotary actuator 12 is mounted to cylindrical housing 6, and string 14 is mounted to portions of rotary actuator with knots 16, 18. *Id.* ¶ 31. String 14 (or another suitable flexible member) is wound around cylindrical elastomeric diaphragm 8. *Id.*; *see also id.* ¶ 17 (“The flexible member may be a string, suture or band or other suitable material.”). Hartley teaches that “[r]otation of the rotary actuator 12 with respect to the cylindrical housing 6 will cause the string 14 to be pulled in both directions at once and hence the cylindrical diaphragm 8

to be constricted" and closed as shown in Figure 4 (above right). *Id.* ¶¶ 31, 34.

3. Goff (Ex. 1007)

Goff is a PCT application titled "Methods and Systems for Filtering Aspirated Materials" that published on November 23, 2006. Ex. 1007, codes (43), (54). Goff relates, in general, to "a method and system for separating and optionally classifying solids removed from a patient in a fluid aspirate." *Id.* ¶ 1.

Goff discloses that, in certain embodiments, "at least one filter assembly including a filter housing and a removable (and replaceable) filter element is placed between the aspiration catheter and the aspirate receptacle in order to remove solid materials from the aspirate before the remaining liquid phase of the aspirate flows to the aspirate receptacle." *Id.* ¶ 11. Goff further discloses that "[t]he filter assembly usually comprises at least one filter housing having at least one filter element removably disposed in an interior thereof." *Id.* ¶ 15. In an embodiment of Goff, "the filter housing has an upper shell and a lower shell which may be taken apart to permit introduction, removal, and replacement of the filter element in the interior of the housing." *Id.*

An embodiment of Goff's selective fluid barrier valve device is shown in Figure 2 below, which figure includes Petitioner's annotations. Pet. 9 (Ex. 1007, Fig. 2 (annotated by Petitioner)); Ex. 1007, Fig. 2.

IMPERATIVE Ex. 1030
IPR Petititon - US 11,554,005

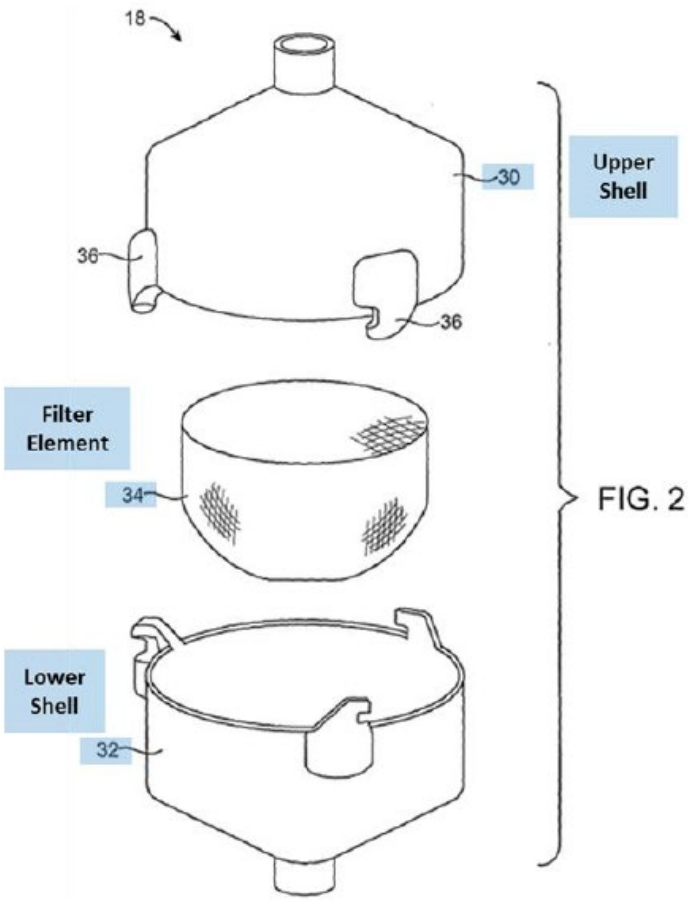

Goff's Figure 2, above, shows filter assembly 18 comprising upper shell 30, lower shell 32, and filter element 34 disposed within the interior of the shells. Ex. 1007 ¶¶ 18, 25. According to Goff, "upper shell 30 is removable from the lower shell 32, typically including mating connectors 36 disposed about the open peripheries of each shell." *Id.* ¶ 25. "[F]ilter element 34 is constructed so that it nests within [] lower shell 32 of the filter assembly." *Id.* ¶ 26.

4. Aklog (Ex. 1005)

Aklog is a U.S. patent that issued on May 27, 2014. Ex. 1005, code (45). Aklog is titled "Systems and Methods for Removing Undesirable Material Within a Circulatory System During a Surgical Procedure." *Id.* at code (54).

Aklog discloses an aspiration system for removing undesirable material from blood vessels. *Id.* at 2:7–32, 7:27–37 (disclosing devices and techniques "to remove substantially en bloc (i.e., wholly or entirely) undesirable material, such as thrombi and emboli, from the vasculature, including medium to large size blood vessels, and from heart chambers"), Fig. 7 (depicting an embodiment of Aklog's system). More specifically, Aklog discloses an aspiration system for removing clot material from "the pulmonary circulation (e.g., pulmonary arteries), systemic venous circulation (e.g., vena cavae, pelvic veins, leg veins, neck and arm veins) or arterial circulation (e.g., aorta or its large and medium branches)." *Id.* at 7:32–38; *see also id.* at 1:17–24, 5:11–19, 5:28–41, Figs. 1, 6–7. Obstruction of the pulmonary arteries is, as Aklog explains, "known as pulmonary embolism." *Id.* at 2:20–32. Blood clots in the large veins of the legs and pelvis are, as Aklog notes, "known as deep vein thrombosis (DVT)." *Id.* at 2:7–19.

E. Ground 1: Asserted Anticipation by Garrison

Petitioner argues that claims 1, 2, 5, 6, 10, 11, and 13 are anticipated by Garrison. Pet. 23, 24–40 (claims 1–2), 54–57 (claims 5–6), 70–71 (claims 10–11), 77–78 (claim 13). Among those challenged claims, only claim 1 is independent.

The analysis below focuses primarily on those portions of claim 1 labeled [1A], [1D], and [1E] by Petitioner. Pet. 26–30, 35–39. Limitation [1A] requires "an aspiration pump in communication with a first chamber," limitation [1D] recites "wherein the [user-actuatable] valve is configured to be closed while negative pressure is generated in the first and second chambers, and wherein the valve is configured to be opened after the negative pressure is generated in the first and second chambers," and limitation [1E] recites "wherein upon user actuation to open the valve with

IMPERATIVE Ex. 1030
IPR Petititon - US 11,554,005

the negative pressure having been generated in the first and second chambers, fluid flow at least partially from the second chamber into the first chamber causes rapid aspiration into the second chamber." *See supra* Section II.D.

Petitioner argues that Garrison discloses an aspiration system with an accelerated response as recited in claim 1's preamble (if limiting). Pet. 25–26. Petitioner contends that Garrison describes and depicts an aspiration catheter connected to "an aspiration source (e.g., aspiration pump) having a first chamber," a "second chamber having a filter," and "at least one hemostasis valve." *Id.* (citing Ex. 1006, Fig. 34 (with Petitioner's color-coding and annotations)). According to Petitioner, Garrison discloses a rapid aspiration system because, in an embodiment where the aspiration source is a syringe and in which a negative pressure is generated by closing a valve and pulling back on the syringe's plunger, a subsequent opening of the valve "would enable the maximum level of aspiration in a ***rapid*** fashion with one user, something that is currently not possible with existing technologies." *Id.* (quoting Ex. 1006 ¶ 134) (with Petitioner's emphasis)); *see also* Ex. 1006 ¶ 129; Ex. 1003 ¶ 69.

For limitation [1A], reciting "an aspiration pump in communication with a first chamber," Petitioner contends that Garrison discloses this limitation. More specifically, Petitioner cites Figure 34 (and feature 3430, depicting an aspiration pump) and Garrison's disclosure that "[t]he active source of aspiration may be an ***aspiration pump***, a regular or locking syringe, a hand-held-aspirator, hospital suction, or the like." Pet. 27 (citing Ex. 1006 ¶ 134 (with Petitioner's emphasis)). For the recited "first chamber," Petitioner cites as an example Figure 32, reproduced in material

IMPERATIVE Ex. 1030
IPR Petititon - US 11,554,005

part below with Petitioner's annotations. *Id.* (Ex. 1006, Fig. 32 (partial reproduction)).

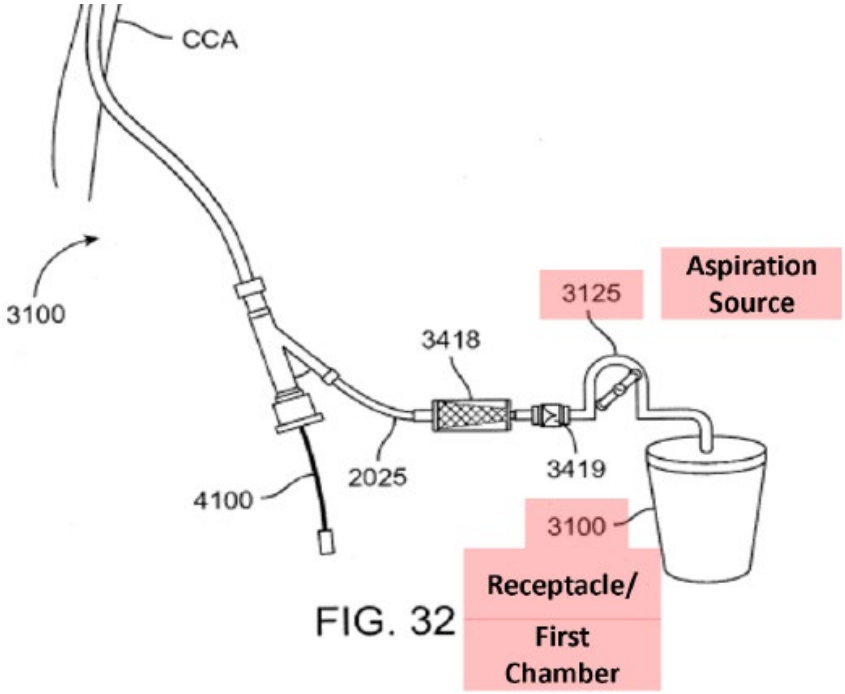

FIG. 32

Figure 32 above (partial view) is an embodiment of Garrison's system, with Petitioner's annotations showing feature 3125 as the "Aspiration Source" (i.e., aspiration pump) and receptacle 3100 located downstream from the pump, which receptacle Petitioner contends is the claimed "First Chamber." Pet. 28; *see also id.* at 29 (citing, as another example, "aspiration pump device 3250" as shown in Garrison's Figure 36). According to Petitioner, "regardless of whether the receptacle/chamber is 'separate' from the pump, or 'combined into a single device' with the pump, the receptacle/chamber is 'in communication' with aspiration pump." *Id.* at 29–30 (citing Ex. 1003 ¶¶ 71–73).

Petitioner also contends that Garrison discloses limitations [1D] and [1E]. Pet. 35–39 (citing Ex. 1003 ¶¶ 83–91). Although Petitioner and its declarant acknowledge that Garrison describes the generation of negative

IMPERATIVE Ex. 1030
IPR Petititon - US 11,554,005

pressure and "rapid" aspiration in relation to a system that uses a syringe, Petitioner argues that "the aspiration source could be an aspiration pump" and the system configured to provide substantially the same functionality. Pet. 35–36 ("While this embodiment specifically includes a flow controller and syringe, Garrison discloses that the valve could be a stopcock . . . and the aspiration source could be an aspiration pump"); Ex. 1003 ¶ 85 (same, citing Ex. 1006 ¶ 134); *see also* Ex. 1003 ¶¶ 88–90 (Thornton testimony that a syringe or "other negative pressure source" would function in the same way where "a rapid movement of blood from the second, filter chamber to the first chamber occurs").

Petitioner annotates Garrison's Figure 34 (reproduced in material part below) in support of its arguments. Pet. 38 (Ex. 1006, Fig. 34 (partial reproduction)).

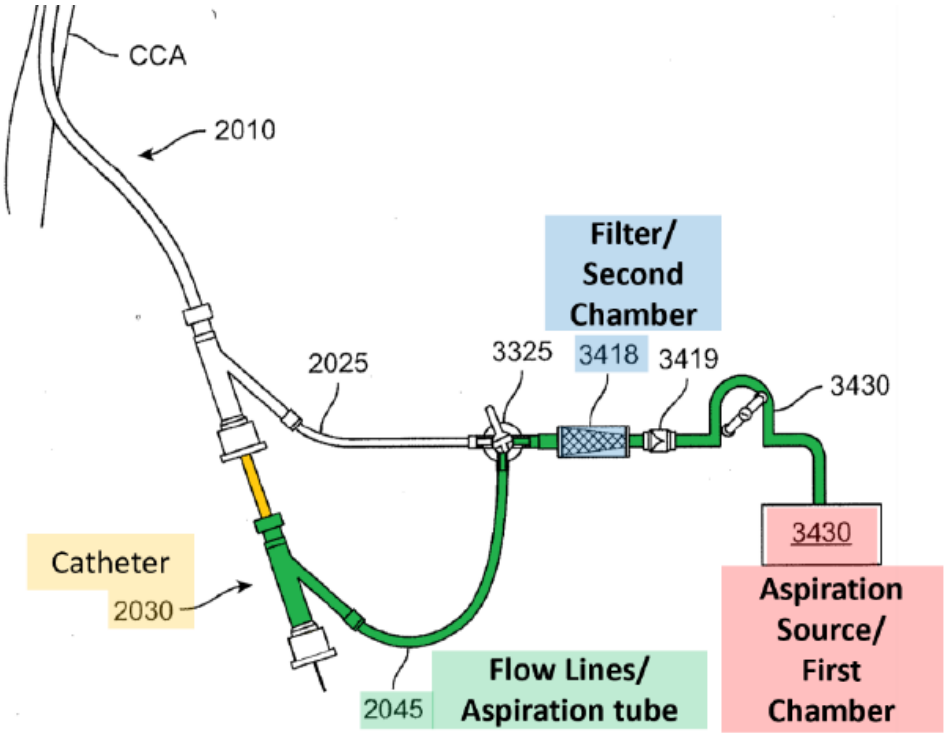

FIG. 34

Figure 34 above (partial view) shows an embodiment of Garrison's system with Petitioner's annotations identifying the alleged Catheter (orange), Flow Lines/Aspiration tubes (green), Filter/Second Chamber (blue) and Aspiration Source/First Chamber (red). According to Petitioner, "[b]ecause the valve (e.g., stopcock 3325) is distal to the first and second chambers, the negative pressure is generated in both the first and second chambers" and, with the various components in fluid communication, if the valve is subsequently opened, "fluid flow at least partially from the second chamber [blue] into the first chamber [red] causes rapid aspiration into the second chamber." *Id.* at 35–39. Hence, Petitioner argues, limitations [1D] and [1E] are met by Garrison.

On this record, we agree with Patent Owner that Petitioner has not shown sufficiently that Garrison describes the subject matter of claim 1's system with the subject matter being arranged as recited in the claim. Prelim. Resp. 44–62. Patent Owner argues, for example, that Petitioner "fails to identify any embodiment of Garrison that discloses . . . an aspiration system including an aspiration pump in which negative pressure is generated in a first chamber and a second chamber when a valve is closed." *Id.* at 45. Patent Owner cites, *inter alia*, Petitioner's identification of "an aspiration pump that is positioned *upstream* of a receptacle such that the pump delivers fluid (*e.g.*, blood) to the receptacle via positive pressure and thus cannot generate negative pressure in the receptacle"—the alleged "first chamber" identified by Petitioner. *Id.* at 45–46 (emphasis added). Patent Owner persuasively supports its counterarguments with the teachings of Garrison and the testimony of Mr. Brown. *See, e.g.*, Ex. 1006, Figs. 32–36; Ex. 2001 ¶¶ 64–76. We discuss in further detail below.

IMPERATIVE Ex. 1030
IPR Petititon - US 11,554,005

Patent Owner argues:

> whenever Garrison discloses a pump in the embodiments identified by Petitioner—whether a peristaltic pump as shown in Figures 32–34, a centrifugal pump, or the pump device 3250 shown in Figure 36—the pump is positioned to draw fluid through an inlet and expel the fluid out of an outlet via positive pressure to a downstream delivery location such as a receptacle or blood return line. Such a pump would not and could not generate negative pressure in the downstream delivery location (the receptacle the Petition alleges is the first chamber) for multiple reasons—and therefore would not generate negative pressure in any "first chamber" identified by Petitioner.

Prelim. Resp. 46. We agree with Patent Owner.

As Patent Owner explains, Petitioner's reliance on Garrison's Figures 32 and 33 and features 3125/3425 (i.e., "aspiration pump") and receptacles 3100/3105 as the claimed "first chamber" fails to show to a reasonable likelihood that all limitations of claim 1 are met. *Id.* at 46–51 (citing Ex. 1006, Figs. 32–33; Ex. 2001 ¶¶ 65–68). Figure 32, as annotated by Patent Owner, is reproduced below. *Id.* at 50 (Ex. 1006, Fig. 32 (annotated)).

IMPERATIVE Ex. 1030
IPR Petititon - US 11,554,005

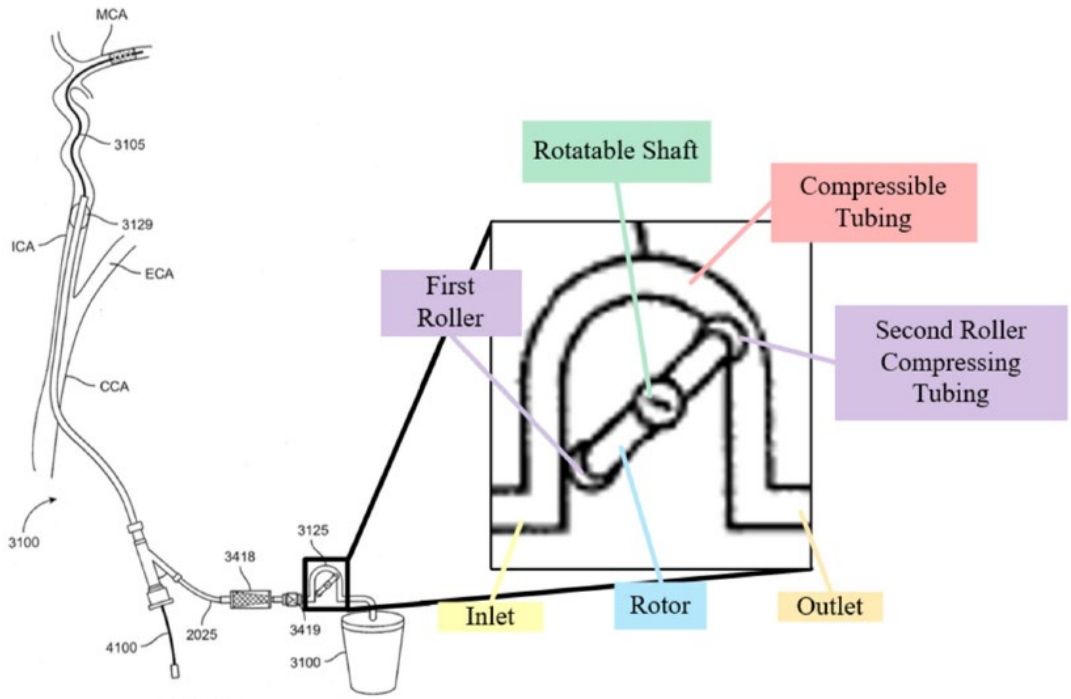

FIG. 32

Figure 32 above shows an embodiment of Garrison's system, modified by Patent Owner to include an exploded view of the aspiration source (3125)—a "peristaltic pump"—and annotations citing the features of such pump. *Id.*; Ex. 2001 ¶¶ 65–67.

In the above embodiment, as Mr. Brown explains, receptacle 3100 "cannot be the 'first chamber' because the source of aspiration 3125/3425 is a pump, the pump is a peristaltic pump (commonly referred to as a roller pump) positioned upstream of the receptacle 3100/3105 that delivers fluid to the receptacle 3100 via positive pressure." Ex. 2001 ¶ 65. Mr. Brown testifies persuasively that a POSA would understand a peristaltic pump uses a rotor and rotatable shaft (blue and green highlights in the image above) to force first and second rollers (purple) to compress tubing (red) such that "negative pressure is only generated on the inlet side [(yellow)] of the pump . . . and positive pressure is generated on the outlet side [(orange)] of the pump (e.g., toward the receptacle)." *Id.* ¶ 67. Thus, Patent Owner contends,

if receptacle 3100 or 3105 is the alleged "first chamber," Petitioner has not shown how a negative pressure is generated in that chamber as claimed—instead, blood is transported to the receptacle by a positive pressure (or atmospheric pressure assuming the receptacle was vented). Prelim. Resp. 48–51; Ex. 2001 ¶ 68; *see also* Ex. 2001 ¶¶ 72–73 (testifying that other types of pumps, such as centrifugal pumps, operate similarly to draw fluid into an inlet and expel the fluid out of an outlet and, thus, "would have the same result of generating positive pressure . . . in the downstream receptacle"). Petitioner has not persuaded us on this record that the cited disclosures in Garrison satisfy at least limitations [1A] and [1D] of claim 1.[7]

Petitioner's reliance on the embodiment of Garrison's system shown in Figure 34 is also unavailing. As argued by Patent Owner, similar to the embodiments of Figures 32 and 33, Figure 34 shows that when the source of aspiration is a pump, it is positioned upstream of a receptacle for receiving blood. Prelim. Resp. 52–53; Ex. 1006, Fig. 34; Ex. 2001 ¶ 71. Petitioner does not explain sufficiently how a negative pressure as claimed would be generated in any alleged "first chamber" in this arrangement. Pet. 27.

Petitioner also cites Garrison's teaching that "[t]he aspiration source 3425 and delivery location may be combined into a single device such as a

---

[7] For similar reasons, if limitation [1D] is not met, we do not see how limitation [1E] is satisfied. *See* Ex. 1003 ¶ 89 (testifying that limitation [1E] is met but showing an embodiment where a peristaltic pump is oriented upstream of the alleged first chamber). Moreover, with a peristaltic pump that rotatably and continuously compresses intervening tubing at one or multiple points upstream to the receptacle (i.e., the alleged first chamber), Petitioner has not shown sufficiently how the "rapid" aspiration and fluid flow between the first and second chambers contemplated by limitation [1E] would work (e.g., without the roller arms at least temporarily impeding if not blocking flow into the receptacle).

IMPERATIVE Ex. 1030
IPR Petititon - US 11,554,005

syringe." Pet. 28 (citing Ex. 1006 ¶ 131). But that teaching does not explain how Garrison's aspiration pump embodiments might or should be arranged or configured in a way that generates a negative pressure in any alleged "first chamber" identified by Petitioner. As Patent Owner argues, Garrison's disclosure "does not mean that when the source of aspiration is an aspiration pump, the receptacle and aspiration pump are combined and reconfigured such that negative pressure is generated in the receptacle in contrast to the disclosed embodiments of an aspiration pump in Garrison." Prelim. Resp. 52; Ex. 2001 ¶ 69 (testifying that "the syringe is the only example of such a combined device" and "nowhere does Garrison disclose a combination of the receptacle . . . and the aspiration pump . . . in which the aspiration pump is positioned to somehow generate negative rather than positive pressure or atmospheric pressure in the receptacle").[8]

We have also considered Petitioner's identification of the "aspiration pump device 3250" as depicted in Garrison's Figure 36. Pet. 29 (citing Ex. 1006, Fig. 36, ¶ 136). Petitioner does not explain sufficiently or persuasively on this record how this embodiment meets the limitations of

[8] Patent Owner argues, and we agree, that "Garrison discloses a syringe as a distinct alternative to an aspiration pump." Ex. 2001 ¶ 77 (citing Ex. 1006 ¶ 134); Prelim. Resp. 57–58. Petitioner does not argue that a syringe is an "aspiration pump" as claimed or propose a claim construction in support of such argument (and we take no position on that issue here). Instead, Petitioner relies on Garrison's express disclosure of an "aspiration pump" (e.g., Ex. 1006 ¶ 134) to satisfy the claimed "aspiration pump" and Petitioner and its declarant, Mr. Thornton, take positions more consistent with a view that the claimed "aspiration pump" does not encompass Garrison's syringe. *See, e.g.*, Pet. 27, 35–36 (noting that Garrison's locking-syringe embodiment "specifically includes . . . [a] syringe," then arguing "the aspiration source could be an aspiration pump"); Ex. 1003 ¶ 85 (same).

IMPERATIVE Ex. 1030
IPR Petititon - US 11,554,005

claim 1. Petitioner states that this "pump device includes an 'expandable portion 3210' to collect blood within 'chamber 3220' before expelling the blood into a return line." *Id.* As Patent Owner argues, however, even if this pump were substituted for the peristaltic pump of Figures 32–34, it would have the same effect of generating a positive pressure in a downstream receptacle or return line in Garrison's system. Prelim. Resp. 54 (citing Ex. 2001 ¶ 74 (testifying that blood would be expelled from the pump's outlet under positive pressure)).

Petitioner never explains how Figure 36's pump would otherwise be used in Garrison's system in a way that meets all claim 1's limitations. Insofar as pump device 3250 includes a "chamber 3220" that is connected to a vacuum source, which produces a reduced pressure in said "chamber," we agree with Patent Owner that this chamber cannot be the "first chamber" of claim 1 because it is "out of fluid communication" with the flow line and, thus, cannot meet the requirement of "an aspiration catheter configured for placement *into fluid communication* with the first chamber by way of an aspiration tube" as recited in limitation [1B]. Prelim. Resp. 55–56 (citing Ex. 2001 ¶ 75) (emphasis added); Ex. 1006 ¶¶ 136–137 (describing features and operation of Figure 36's pump). Patent Owner's declarant Mr. Brown also testifies that "negative pressure in the chamber 3220 acts external to the expandable portion 3210." Ex. 2001 ¶ 75. And, on this record, we will not speculate about whether the pump's expandable portion 3210 could be a "first chamber" in which a negative pressure is generated as claimed, when the Petition did not make that assertion—much less do so with sufficient clarity and persuasive evidentiary support. *Netflix, Inc. v. DivX, LLC*, 84 F.4th 1371, 1377 (Fed. Cir. 2023) (holding that "the Board should not have to decode a petition to locate additional arguments beyond the ones clearly

IMPERATIVE Ex. 1030
IPR Petititon - US 11,554,005

made" and "[u]ltimately, it is the petitioner's burden to present a clear argument"); *Intelligent Bio-Systems, Inc. v. Illumina Cambridge Ltd.*, 821 F.3d 1359, 1369 (Fed. Cir. 2016) ("It is of the utmost importance that petitioners in the IPR proceedings adhere to the requirement that the initial petition identify 'with particularity' the "evidence that supports the grounds for the challenge to each claim.'") (quoting 35 U.S.C. § 312(a)(3)).

We will also not speculate about whether some other type of aspiration pump suggested in the prior art might be used or how that might generate a negative pressure throughout the various aspects of the system as required by claim 1. On this record, we agree with Patent Owner that, where Garrison describes a use of an aspiration pump, "never are the receptacles [(i.e., alleged first chambers)] upstream of the aspiration source or otherwise configured to have negative pressure." Prelim. Resp. 59 (citing Ex. 2001 ¶ 80). Moreover, we agree with Patent Owner that Petitioner fails to "explain how an aspiration pump instead of a syringe could generate negative pressure in any of those alleged 'first chambers.'" *Id.* at 58–59 (noting Petitioner's citation to syringe embodiments for disclosure about generating negative pressure without sufficient explanation from Petitioner how negative pressure is generated in components alleged as the first chamber for Garrison's aspiration pump embodiments in a manner that satisfies the elements of claim 1's system).

For the reasons discussed above and based on the record presented here, we determine that Petitioner has not established a reasonable likelihood that it will succeed in showing that claim 1 is anticipated by Garrison. We have also considered Petitioner's contentions that dependent claims 2, 5, 6, 10, 11, and 13 are anticipated by Garrison. Pet. 39–40, 54–57, 70–71, 77–78. However, because Petitioner has not shown that claim 1 is anticipated

IMPERATIVE Ex. 1030
IPR Petititon - US 11,554,005

by Garrison, it has likewise not shown that Garrison anticipates the claims that depend from claim 1. *See RCA Corp. v. Applied Digital Data Sys., Inc.*, 730 F.2d 1440, 1446 (Fed. Cir. 1984) (holding that, if prior art does not anticipate an independent claim, it cannot anticipate an associated dependent claim).

F. Ground 2: Asserted Obviousness over Garrison

Petitioner contends that claims 1, 2, 4–6, 9–20, and 28–30 would have been obvious over Garrison alone. Pet. 23. As Patent Owner points out, "Petitioner's only assertion that Claim 1 is rendered obvious by Garrison is that Garrison anticipates Claim 1." Prelim. Resp. 63–64. Indeed, for Ground 2 and claim 1, Petitioner merely relies on its anticipation analysis for claim 1 and (in a footnote) the settled legal principle "that a disclosure that anticipates under §102 also renders the claim invalid under §103" because "anticipation is the epitome of obviousness." *Realtime Data*, 912 F.3d at 1373 (internal quotation marks omitted); Pet. 24–39 (anticipation analysis for claim 1); *see also* Pet. 24 n.2 (citing *Realtime Data*). Petitioner's Ground 2 analysis for independent claims 14 and 28 presumes Petitioner's success with its claim 1 analysis. Pet. 79–80 (claim 14), 86 (claims 28).

For the reasons discussed above, we determine that Petitioner has not shown, sufficiently for institution, that Garrison discloses all of claim 1's limitations and anticipates that claim. *See supra* Section III.E. Because Ground 2 hinges on Petitioner making this predicate showing, we find that Petitioner has not met its burden for Ground 2 either. We have also considered Petitioner's allegations against the challenged dependent claims, but that does not change our determination here. *In re Fritch*, 972 F.2d 1260, 1266 (Fed. Cir. 1992) ("[D]ependent claims are nonobvious if the independent claims from which they depend are nonobvious.").

IMPERATIVE Ex. 1030
IPR Petititon - US 11,554,005

G. Grounds 3–8: Asserted Obviousness over Garrison Combinations

Petitioner argues under Grounds 3–8 that various of the challenged claims would have been obvious over several combinations of Garrison with one or more other references. *See supra* Section II.E (Table of Grounds). For example, Petitioner argues that claims 3, 23, and 25–27 would have been obvious over Garrison and Hartley; that claim 24 would have been obvious over Garrison, Aklog, and Hartley; and that claims 25 and 26 would have been obvious over Garrison, Hartley, and Goff. *Id.*

However, for Grounds 3–8, Petitioner's reliance on the secondary references of Hartley, Aklog, and Goff is limited relative to what elements of the challenged claims those references allegedly disclose. Petitioner relies, for example, on Hartley's more specific teachings about certain features of a hemostasis valve (e.g., including a string as the alleged "filament") to address those challenged claims that add such limitations. Pet. 40–46 (claim 3). Petitioner relies on Goff's teachings about a removable filter element for claims requiring a removable second chamber and/or filter. *Id.* at 46–53 (claim 4), 85 (claims 25–26). And, Petitioner relies on Aklog's teachings about using an aspiration system to remove clot material from different parts of the vasculature (e.g., in a subject's lungs or legs) for those challenged claims that add that the aspiration catheter's distal end is configured for placement proximate a clot that comprises a pulmonary embolism or deep vein thrombosis. *See, e.g.*, *id.* at 57–69 (claims 7–8), 84 (claim 24).

Notwithstanding the above, Petitioner still relies primarily and heavily on Garrison in its challenges to these claims. Indeed, as it concerns the independent claims, Petitioner relies on Garrison as disclosing all (for claim 1) or nearly all (for claims 14, 23, and 28) the claim limitations as part

IMPERATIVE Ex. 1030
IPR Petititon - US 11,554,005

of Petitioner's challenge under Grounds 3–8. The shortcomings with Petitioner's analysis of Garrison under Grounds 1 and 2 remain manifest for Grounds 3–8. Petitioner does not argue, much less establish, that any of Hartley, Goff, or Aklog disclose "an aspiration pump in communication with a first chamber," wherein "the valve is configured to be closed while negative pressure is generated in the first and second chambers" as recited in each of independent claims 1, 14, 23, and 28. Petitioner instead relies on Garrison as allegedly disclosing those limitations, with Grounds 3–8 referring back to Petitioner's analysis for claim 1 and Ground 1. Prelim. Resp. 66 (citing Pet. 80, 83, 86). Grounds 3–8 are therefore flawed on this record for the same reasons already discussed above. *See supra* Sections III.E–F.

IV. CONCLUSION

Petitioner has not demonstrated a reasonable likelihood that it will prevail in establishing the unpatentability of any of the challenged claims of the '691 patent.[9] Accordingly, we deny institution of *inter partes* review.

V. ORDER

In consideration of the foregoing, it is hereby:

ORDERED that the Petition is *denied* and no *inter partes* review is instituted.

---

[9] Because we conclude that Petitioner has not shown that it is reasonably likely to prevail on its challenge as presented in the Petition, we need not further address whether discretionary denial is warranted. *See* Pet. 87–89; Prelim. Resp. 26–43, 66–71 (argument against discretionary denial under 35 U.S.C. § 325(d) and 35 U.S.C. § 314(a)); Papers 8 and 9.

IMPERATIVE Ex. 1030
IPR Petititon - US 11,554,005

FOR PETITIONER:

Joshua J. Stowell
Joseph R. Re
Brian C. Barnes
KNOBBE, MARTENS, OLSON & BEAR, LLP
Joshua.Stowell@knobbe.com
Joe.Re@knobbe.com
Brian.Barnes@knobbe.com

FOR PATENT OWNER:

Joseph Hamilton
Paul Parker
PERKINS COIE LLP
hamilton-ptab@perkinscoie.com
parker-ptab@perkinscoie.com

IMPERATIVE Ex. 1030
IPR Petititon - US 11,554,005