Trials@uspto.gov
571-272-7822

Paper: 10
Date: October 23, 2025

UNITED STATES PATENT AND TRADEMARK OFFICE

BEFORE THE PATENT TRIAL AND APPEAL BOARD

IMPERATIVE CARE, INC.,
Petitioner,

v.

INARI MEDICAL, INC.,
Patent Owner.

IPR2025-00989
Patent 11,865,291 B2

Before JEFFREY N. FREDMAN, ERIC C. JESCHKE, and TIMOTHY G. MAJORS, *Administrative Patent Judges.*

MAJORS, *Administrative Patent Judge*.

DECISION
Granting Institution of *Inter Partes* Review
35 U.S.C. § 314

Imperative Care v. Inari Medical
IPR2025-00289
Imperative Care Ex. 1046

I. INTRODUCTION

Imperative Care, Inc. ("Petitioner") filed a Petition (Paper 1, "Pet.") requesting *inter partes* review of claims 1–8 and 12–19 of U.S. Patent No. 11,865,291 B2 (Ex. 1001, "the '291 patent"). Pet. 1, 26. Inari Medical, Inc. ("Patent Owner") filed a Preliminary Response (Paper 6, "Prelim. Resp."). With our authorization, Petitioner also filed a Reply to Patent Owner's Preliminary Response (Paper 8, "Prelim. Reply").

Under 35 U.S.C. § 314(a), an *inter partes* review may not be instituted unless it is determined that there is a reasonable likelihood that the petitioner will prevail with respect to at least one of the claims challenged in the petition. For reasons explained below, we conclude that Petitioner shows a reasonable likelihood that it will prevail with respect to at least one of the '291 patent's challenged claims. We institute *inter partes* review on all challenged claims. *See SAS Inst. Inc. v. Iancu*, 584 U.S. 357, 362–63 (2018); 37 C.F.R. § 42.108(a) ("When instituting *inter partes* review, the Board will authorize the review to proceed on all of the challenged claims and on all grounds of unpatentability asserted for each claim.").

Findings and conclusions at this stage are preliminary and based on the current record. Any final decision will be based on a full trial record.

II. BACKGROUND

A. Real Parties-in-Interest

Petitioner identifies itself as the real party-in-interest. Pet. 97. Patent Owner identifies itself as the real party-in-interest, and notes that it is a wholly-owned subsidiary of Stryker Corporation. Paper 3, 2.

B. Related Matters

The parties identify the following lawsuit involving assertion of the ’291 patent (and additional patents): *Inari Medical Inc. v. Imperative Care, Inc.*, No. 24-cv-3117 (N.D. Cal.).[1] Pet. 97–98; Paper 3, 2.

The parties also identify related matters before the Board. Pet. 98–99; Paper 3, 2–3. Those matters include: IPR2024-01157 (“the 1157 IPR”) as challenging the claims of U.S. Patent No. 11,697,011; IPR2024-01257 (“the 1257 IPR”) as challenging the claims of U.S. Patent No. 11,744,691; IPR2025-00156 (“the 0156 IPR”) as challenging claims of U.S. Patent No. 11,697,012; IPR2025-00289 (“the 289 IPR”) as challenging claims of U.S. Patent No. 11,554,055; IPR2025-00728 (“the 728 IPR”) as challenging claims of U.S. Patent No. 11,844,921; IPR2025-01021 (“the 1021 IPR”) as challenging claims of U.S. Patent No. 11,969,333; and IPR2025-1025 (“the 1025 IPR”) as challenging claims of U.S. Patent No. 11,974,910. Pet. 95–96; Paper 3, 2–4.[2] *Id.*

Patent Owner further identifies numerous other patents and patent applications as related by priority to the ’291 patent. Paper 3, 4.

C. The ’291 Patent (Ex. 1001)

The ’291 patent is titled “Hemostasis Valves and Methods of Use.” Ex. 1001, code (54). The patent issued January 9, 2024, from an application

---

[1] Patent Owner further states that *Inari Medical, Inc. v. Inquis Medical, Inc.*, No. 24-1023-CFC (D. Del.) involves several other patents that “are not related by priority to the involved ’291 Patent but may involve related issues.” Paper 3, 2.

[2] We instituted trial in the 1157 IPR, 0156 IPR, 289 IPR, and 728 IPR. Each of those cases is ongoing. We denied institution in the 1257 IPR. The Board has not yet decided whether trial will be instituted in the 1021 IPR or 1025 IPR.

filed May 2, 2023. *Id.* at codes (22), (45). The earliest application to which the ’291 patent claims priority is a provisional application filed September 6, 2017. *Id.* at code (60).

According to the ’291 patent, “the desire for improved patient outcomes has led to the development of hemostasis valves that facilitate minimally invasive surgery.” *Id.* at 1:30–32. “In minimally invasive surgery, small incisions are created through a blood vessel [into] which one or several catheters are inserted.” *Id.* at 1:33–35. “These catheters are moved to a position proximate to tissue, nerves, or other body structures targeted by the surgery, and then tools for performing the procedure are inserted through the lumens of some or all of these catheters.” *Id.* at 1:36–40. “To minimize blood loss, prevent delivery of air into the vasculature, and to facilitate maintenance of sterility within the patient’s body . . . , these catheters are equipped with hemostasis valves.” *Id.* at 1:41–44. The ’291 patent states that “new and improved” hemostasis valves “are desired.” *Id.* at 1:59–60.

The ’291 patent discloses that “[t]he valve can include a tubular [elongate] member that can be constricted, collapsed, and/or sealed by one or several tensioning mechanisms.” *Id.* at 1:65–2:1. According to the patent, “[t]he tensioning mechanism can include at least one filament that extends around at least a portion of the tubular member,” and such “filament can interact with the tubular member to constrict, collapse, and/or seal the tubular member via manipulation of the tensioning mechanism(s).” *Id.* at 2:1–2:11 (disclosing that such valve, by action of the tensioning mechanism and filament, “can seal around a wide range of tool sizes and shapes” that are passed through the tubular member). The patent discloses that, in embodiments, the tensioning mechanism can include an actuator coupled to

the filament, which actuator can be operated to control movement of the filament from a first position (where the central lumen is constricted and sealed) to a second position (where the central lumen is un-constricted and open). *Id.* at 2:51–62. Moreover, the patent explains, an actuator can be biased toward the first or second positions. *Id.* at 2:64–66.

We reproduce below the ’291 patent’s Figure 2 including annotations provided by Petitioner, with additional annotations added by the Board.

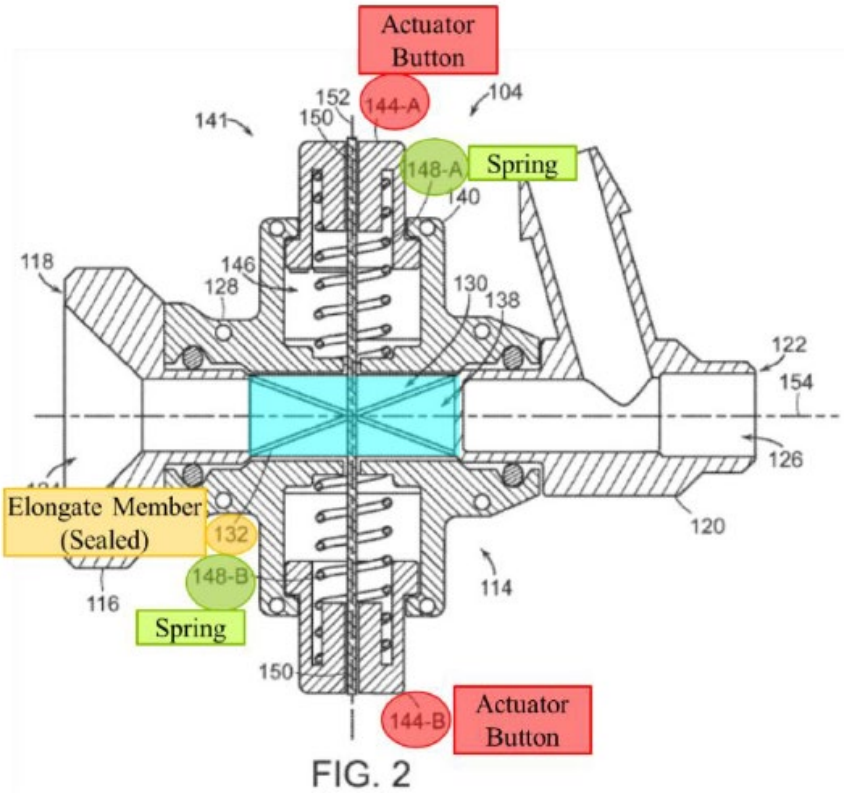

Pet. 4 (modified by blue highlight added by Board); Ex. 1001, Fig. 2.

Figure 2, as depicted above, is a side cross-sectional view of an embodiment of valve (104) described in the ’291 patent. Ex. 1001, 5:29–30. The valve includes, *inter alia*, a housing 128, elongate member 132 (orange highlight) defining a central lumen, constricting mechanism 141, filament 150, and oppositely disposed actuator buttons (red highlights). *Id.* at 7:11–7:45, 9:7–53. In the embodiment depicted above, the filament is disposed around the

elongate member and coupled to both actuator buttons (which are undepressed); the buttons are biased towards a first (i.e., closed) configuration by a bias feature (e.g., springs (green highlights)) such that the elongate member is collapsed and sealed by the filament in the region highlighted blue. *Id.* at 8:38–56. Although not shown in the figure above, when the buttons are depressed, the constricting mechanism moves to a second (i.e., open) configuration where the "the filament 150 is loosened," allowing expansion of the elongate member 132 and unsealing of the central lumen 138. *Id.* at 9:54–62, Fig. 3 (showing open configuration).

According to the '291 patent, the "filament 150 can be arranged in a variety of configurations." *Id.* at 13:17–18. For example, the filament can comprise a "single loop 604 that can extend around the elongate member 132 and/or through which the elongate member 132 can be received as shown in FIG. 6." *Id.* at 13:19–21. Alternatively, the filament may comprise one or more "U-shaped section[s]" or "bight[s]" like depicted in Figures 8 and 9. *Id.* at 13:30–36 (disclosing that "filament 150 can be configured to form a bight 800, which bight 800 can be a single bight or multiple bights" and, "[a]s used herein, a 'bight' refers to a U-shaped section between the two ends of the filament 150"). The patent further discloses that, in some embodiments, "the first bight 800-A can extend through the second bight 800-B such that the first and second bights . . . interlock, whereas in other embodiments, the first and second bights 800-A, 800-B can be non-interlocking." *Id.* at 13:36–40.

The patent further discloses that the "filament can be made from a variety of materials including, for example, a polymer, a synthetic, and/or a metal." *Id.* at 9:13–15.

Figures 6–9, showing multiple filament embodiments, are included below.

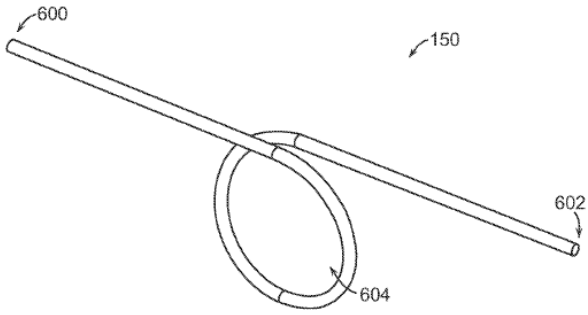

FIG. 6

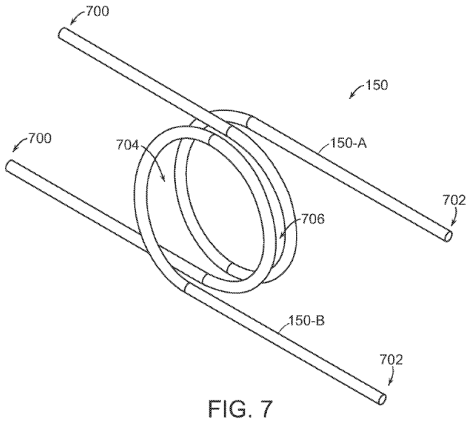

FIG. 7

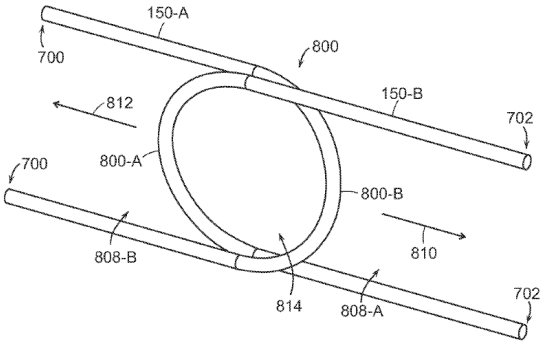

FIG. 8

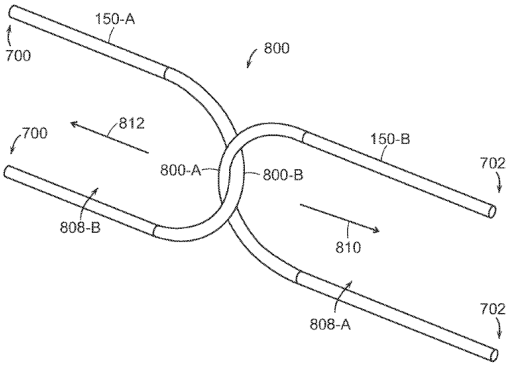

FIG. 9

Ex. 1001, Figs. 6–9. Figures 6–9 above illustrate various filament configurations: "single loop" (Fig. 6), "multiple loops" (Fig. 7), or one or more "bights" (Figs. 8 and 9), which can be non-interlocking or interlocking. *Id.* at 13:18–24 (describing "single loop 604" and "multiple loops" (704, 706) embodiments as depicted in Figs. 6 and 7, respectively), 13:30–14:5 (describing bight embodiments). According to the '291 patent, "the filament 150 can comprise multiple filaments . . . as shown in FIGS. 7 through 9." *Id.* at 12:61–63.

The '291 patent discloses that, in "loop" embodiments like shown in Figures 6 and 7, a filament can be configured to form a "loop" (or "loops") "that can extend around the elongate member 132 [(not shown)] and/or

through which the elongate member can be received." *Id.* at 13:18–21. Further, the patent discloses, "a diameter or size of the loop 604, or of the loops 704, 706 can decrease when the constricting mechanism 141 is moved from the second configuration to the first configuration." *Id.* at 13:26–29.

Figures 8 and 9 show a filament comprising first and second "bights" 800-A, 800-B that may extend around respective portions of an elongate member (not pictured). *Id.* at 13:43–47. The "bights" together define an "encircled area 814" into which the elongate member can be received, and movement of those bights in the directions indicated by arrows 812 and 810 "decreases the size of the encircled area 814 and constricts, collapses, and/or seals the elongate member 132 extending through the encircled area." *Id.* at 13:57–14:5.

D. Illustrative Claims

Petitioner challenges claims 1–8 and 12–19. Claim 1 is illustrative and is reproduced below:

> 1. A hemostasis valve, comprising:
>
> a support;
>
> an actuator having at least a first member movably coupled to the support;
>
> a collapsible tubular sidewall defining a lumen carried by the support;
>
> a filament formed in a loop around the tubular sidewall, the filament having at least a first end portion extending away from the loop to the first member; and
>
> a spring configured to move the first member in a direction that pulls the first end portion away from the tubular sidewall, reducing a diameter of the lumen in response to reducing a diameter of the loop.

Ex. 1001, 22:18–30. To illustrate the subject matter of some of the challenged dependent claims, claim 2 depends from claim 1 and adds "a second member movably coupled to the support." *Id.* at 22:31–32. Claim 3

depends from claim 2 and adds that "the filament further comprises a second end portion extending away from the loop to the second member," and claim 4 depends from claim 3 and adds that "the first end portion, the loop, and the second end portion are one continuous filament." *Id.* at 22:33–38.

Independent claim 18 is directed to an "aspiration catheter system" that comprises an "aspiration catheter" as well as a "hemostasis valve," which valve includes limitations similar to claim 1's valve. *Id.* at 23:18–24:9.

E. Prior Art and Asserted Grounds

Petitioner asserts that claims 1–8 and 12–19 are unpatentable based on the following grounds:

Grounds	Claims Challenged	35 U.S.C. §[3]	Reference(s)/Basis
1	1–3, 5–8, 12–17, 19	102	Schaffer[4]
2	1–3, 5–8, 12–17, 19	103	Schaffer
3	1–8, 12–17, 19	103	Schaffer, Hartley[5]
4	1–8, 12–17, 19	103	Schaffer, Eller[6]

[3] The Leahy-Smith America Invents Act ("AIA"), Pub. L. No. 112–29, 125 Stat. 284, 285–88 (2011), revised 35 U.S.C. §§ 102, 103 effective March 16, 2013. Based on the uncontested assertion that September 6, 2017, is the earliest possible priority date for the '291 patent, we apply the AIA versions of §§ 102 and 103 in this Decision. Pet. 15.

[4] Schaffer et al., US 2003/0225379 A1, published Dec. 4, 2003 (Ex. 1005 ("Schaffer")).

[5] Hartley, US 2003/0116731 A1, published June 26, 2003 (Ex. 1006 ("Hartley")).

[6] Eller, US 9,980,813 B2, issued May 29, 2018 (Ex. 1007 ("Eller")).

5	18, 19[7]	103	Garrison,[8] Schaffer
6	18, 19	103	Garrison, Schaffer, Hartley
7	18, 19	103	Garrison, Schaffer, Eller

Petitioner also relies on testimony from Troy L. Thornton (Ex. 1003) in support of its challenge. Patent Owner provides responsive testimony from Paul J. Zalesky, Ph.D. Ex. 2001.

III. ANALYSIS

A. Legal Standards

"In an [*inter partes* review], the petitioner has the burden from the onset to show with particularity why the patent it challenges is unpatentable." *Harmonic Inc. v. Avid Tech., Inc.*, 815 F.3d 1356, 1363 (Fed. Cir. 2016) (citing 35 U.S.C. § 312(a)(3)).

A claim is unpatentable under 35 U.S.C. § 103 if the differences between the claimed invention and the prior art are such that the claimed invention as a whole would have been obvious at the time the invention was made[9] to a person having ordinary skill in the relevant art. *KSR Int'l Co. v.*

---

[7] The parties assert that claim 19 includes a "mistake" or "error" because, although claim 19 as written purports to depend from the "aspiration system of claim 1," claim 1 is directed to the "hemostasis valve" whereas claim 18 is directed to an "aspiration catheter system." Pet. 88; Prelim. Resp. 75–76. For purposes of this decision, we treat claim 19 as depending from claim 18 and, thus, claim 19 is considered under Grounds 5–7.

[8] Garrison, US 2015/0173782 A1, published June 25, 2015 (Ex. 1011 ("Garrison")).

[9] The AIA revised § 103 such that obviousness is assessed "before the effective filing date of the claimed invention," but *KSR* and other

Teleflex Inc., 550 U.S. 398, 406 (2007). The question of obviousness is resolved on the basis of underlying factual determinations including: (1) the scope and content of the prior art; (2) any differences between the claimed subject matter and the prior art; (3) the level of ordinary skill in the art; and (4) secondary considerations (i.e., objective indicia) of nonobviousness when presented.[10] *Graham v. John Deere Co.*, 383 U.S. 1, 17–18 (1966).

To show unpatentability based on a combination of teachings, "[a]n obviousness determination [also] requires finding both that a skilled artisan would have been motivated to combine the teachings of the prior art references to achieve the claimed invention, and that the skilled artisan would have had a reasonable expectation of success in doing so." *CRFD Rsch., Inc. v. Matal*, 876 F.3d 1330, 1340 (Fed. Cir. 2017) (internal quotation marks omitted).

B. Level of Ordinary Skill in the Art

Petitioner proposes that the person of ordinary skill in the art ("POSA") "would have had an undergraduate degree in mechanical engineering or a related engineering discipline and 2–4 years of product design or engineering experience." Pet. 15 (citing Ex. 1003 ¶ 36).

Patent Owner elaborates on Petitioner's proposed POSA definition. Prelim. Resp. 31–32. Patent Owner states that the POSA "would have had an undergraduate degree in mechanical engineering or a related engineering discipline and 2–4 years of product design or engineering experience

---

obviousness precedents cited herein remain applicable despite this change in the timing of the obviousness inquiry.

[10] Petitioner states that it is not aware of any objective indicia of nonobviousness (Pet. 97) and Patent Owner's Preliminary Response does not provide argument about any objective indicia.

designing medical devices in the field of the '291 Patent." *Id.* at 31 (citing Ex. 2001 ¶ 73) (emphasis added). Patent Owner critiques Petitioner's proposed POSA level because it "omits any requirement of experience in designing medical devices generally, let alone in the field of the '291 Patent." *Id.*

We agree with Patent Owner that Petitioner's proposed POSA definition lacks specificity. That definition, if interpreted generically, could mean that a person may qualify as a POSA if they had, for example, a B.S. in mechanical engineering and only two years of experience designing or engineering *any type of product in any field*. That is too broad.

We find that a POSA would have had the agreed-upon educational credentials—an undergraduate degree in mechanical engineering or a related engineering discipline. Ex. 1003 ¶ 36; Ex. 2001 ¶ 73.

We find that a POSA would also have had 2–4 years of design or engineering experience related to products in the field of the invention, which involves endovascular devices and the surgical procedures that use such devices. Ex. 1001, 1:24–60 (background of the invention). Such devices include, but are not necessarily limited to, hemostasis valves and catheters for minimally-invasive vascular surgeries. *Id.* And, consistent with the testimony of the parties' experts, the POSA need not have had first-hand experience *designing* hemostasis valves. *See, e.g.*, Ex. 1029 (Zalesky Tr.), 72:11–73:7 (testifying direct experience "designing" hemostasis valves or aspiration catheters is not necessary, but "general experience with vascular devices and procedures" is required); Ex. 2006 (Thornton Tr.), 180:13–19. Further, as Dr. Zalesky testified, the POSA's experience related to developing such devices "could be as simple as bench testing and looking at clinical data." Ex. 1029, 74:5–75:1. Lastly, a POSA would have had an

understanding of such devices' design requirements as determined by the needs of the physician, patient, and procedure, which understanding may be informed by work experience and/or study. Ex. 2006, 24:5–21.

Based on this preliminary record and absent argument to the contrary from the parties, Mr. Thornton and Dr. Zalesky both appear to have at least the qualifications of the POSA and are capable of testifying about the POSA's perspective. *See, e.g.*, Ex. 1003 ¶¶ 5–14 (summarizing background and qualifications); Ex. 2001 ¶¶ 8–20 (same).

C. Claim Construction

In an IPR, we construe claims using the same claim construction standard used in a civil action before the courts under 35 U.S.C. § 282(b), including construing claim language in accordance with its ordinary and customary meaning as understood by the POSA, in view of the patent's specification and considering the patent's prosecution history. 37 C.F.R. § 42.100(b). We need only construe terms where the parties dispute a term's meaning and only to the extent needed to resolve the controversy. *Realtime Data, LLC v. Iancu*, 912 F.3d 1368, 1375 (Fed. Cir. 2019).

The parties dispute the interpretation of the term "filament," which appears in each of the challenged claims. Pet. 16–26; Prelim. Resp. 20–31 (rebuttal argument). We address this dispute below.

Independent claim 1 recites, among other limitations, "a *filament formed in a loop* around the tubular sidewall, the filament having at least a first end portion extending away from the loop to the first member" and further configured such that "move[ment] [of] the first member in a direction that pulls the first end portion away from the tubular sidewall, reduc[es] a diameter of the lumen in response to reducing a diameter of the loop." *See*

supra Section II.D. (emphasis added); Ex. 1001, 23:24–24:9 (independent claim 18, reciting similar filament-related language).

According to Petitioner, a POSA would have understood a "filament" in the '291 patent to mean "at least 'one or more threads, lines, cords, ropes, ribbons, flat wires, sheets, or tapes.'" Pet. 16 (citing Ex. 1003 ¶¶ 50–72). Petitioner contends this is the same interpretation advanced by Petitioner in related proceedings, and that it is consistent with the term "filament" as used in the '291 patent and the Board's observation that such structures (e.g., threads, ribbons, etc.) are listed as examples of filaments in the disclosure of the patents challenged in related IPRs. *Id.* at 18–19 (citing Ex. 1017, 13; Ex. 1023, 15); *see also id.* at 17–18 (citing Ex. 1001, 9:21–23 (disclosing "the filament 150 can comprise one or several threads, lines, cords, rope, ribbon, flat wire, sheet, or tape")).

Petitioner also argues the claimed "filament" is not limited to flexible structures. Pet. 19–26. According to Petitioner, the challenged patent never uses the word "flexible" when describing the filament, construing the term to require flexibility injects ambiguity into the claims, and, in a related patent, the claims recite a filament that "is flexible"—demonstrating that flexibility is not inherent to all filaments or necessary in a filament that forms a loop. *Id.* (citing, e.g., Ex. 1003 ¶¶ 64–72; Ex. 1016, claim 1 (reciting, among other limitations, "a first filament extending in a first loop around the tubular member, wherein the first filament is flexible")).

Petitioner argues the Board's preliminary determination in the 156 IPR that the claimed "filament" requires flexibility is inapplicable to the '291 patent's claims. Pet. 19–25 (reproducing relevant language from claims in the 156 IPR (Ex. 1023, 15) reciting, *inter alia*, "a first filament formed in a loop around the collapsible tubular sidewall" where the

"diameter of the valve lumen decreases in response to reducing a diameter of the loop"). According to Petitioner, the claims of the '291 patent differ in meaningful ways from the claims in the 156 IPR. *Id.* at 21–25. Petitioner cites the '291 patent's claim 4 that depends indirectly from claim 1 and recites "the first end portion, the loop, and the second end portion are one continuous filament," which Petitioner argues means claim 1 is broader than the embodiment in Figure 6, depicting a single continuous filament. *Id.* at 22 (arguing "[i]f this were not the case, claim 4 would be superfluous") (citing Ex. 1001, Fig. 6)). Petitioner further contends that the only examples in the '291 patent of a *discontinuous* filament are the "bight" embodiments (like shown in Figures 8–9). *Id.* at 23–24. Petitioner argues the patent's description of two oppositely-disposed bights that collectively form an "encircled area" is not contrary to a finding that such bights form a "loop" as claimed. *Id.* at 23–24 ("While the words are different, 'loop' means to 'encircle'" (citing Ex. 1014, 5)). And, Petitioner contends, the prosecution history for the '291 patent includes no restriction requirement response like the one made during prosecution of the patent challenged in the 156 IPR, which response the Board cited in support of an interpretation of the claimed "filament" in that case. *Id.* at 24; Ex. 1023, 19–21 (explaining "[t]his prosecution history supports Patent Owner's position that claims 1–9 read on embodiments where the [flexible] filament forms a 'loop,' as described and depicted in Figure 6 of the patent, and not 'bights' as described in Figures 8 and 9").

For its part, Patent Owner argues that a "filament" should be "accorded its plain and ordinary meaning," which a POSA would have understood as "a thin, flexible length of material formed by one or more strands of material." Prelim. Resp. 20. According to Patent Owner, this

interpretation is consistent with the claims and the Specification, is further supported by extrinsic evidence including dictionary definitions and the testimony of Petitioner's own declarant, and is also consistent with the Board's claim interpretation in related matters. *Id.* at 20–31 (citing, e.g., Ex. 1001, claim 1, 13:11–29, Figs. 6–9; Ex. 2028, 123:1–3; Ex. 2005, 123:1–3; Ex. 2001 ¶¶ 67–73; Ex. 1023, 17, 32).

The parties' core claim construction dispute is whether the claimed filament must be "flexible." This dispute has special relevance to Grounds 1, 2, and 5 where Schaffer is alleged to disclose the claimed filament. *See supra* Section II.E. According to Patent Owner, because filaments require flexibility, Schaffer's "rigid" actuating members cannot be a filament formed in a loop and, thus, Petitioner has not shown that Schaffer discloses all elements of the claimed valves. *See, e.g.*, Prelim. Resp. 33–43. Conversely, for Grounds 3 and 4 (and relatedly Grounds 6 and 7), there is no dispute that a "filament" is disclosed in the combined teachings of the relied-upon art supporting those grounds, for example, Schaffer plus Hartley (Ground 3). Pet. 49–55 (citing Hartley's "flexible member," i.e., a "string" as meeting the filament limitation (Ex. 1006 ¶ 31, Figs. 1, 3)).

We agree with Petitioner that a "filament" encompasses one or more threads, lines, cords, rope, ribbon, flat wire, sheet, or tape. The '291 patent lists those as example structures that may comprise a filament. Ex. 1001, 9:21–23 ("In some embodiments, the filament 150 can comprise one or several threads, lines cords, rope, ribbon, flat wire, sheet, or tape.").

That does not, however, resolve the dispute about "flexibility." On that issue, and in keeping with our preliminary interpretations in at least the 156 IPR and 728 IPR, we find at this stage that the claimed "filament" is flexible. *SightSound Techs., LLC v. Apple Inc.*, 809 F.3d 1307, 1316 (Fed.

Cir. 2015) ("Where multiple patents derive from the same parent application and share many common terms, we must interpret the claims consistently across all asserted patents.") (internal quotation marks omitted).[11]

As noted above, the challenged claims require a "filament formed in a loop around the tubular sidewall" where, when a portion of the filament is pulled away from the loop, the loop's diameter reduces, thereby reducing the diameter of the lumen formed by the tubular sidewall to seal the valve. *See supra* Section II.D. Every embodiment in the '291 patent where the filament is described as forming a "loop" in the manner claimed involves a filament that is necessarily *flexible*. *See, e.g.*, Ex. 1001, 13:17–29, Figs. 6–7. The valve would not work if the looped filament were somehow inflexible—pulling an end of the filament would not change the diameter of the loop, and the valve would not seal. Ex. 2001 ¶ 65 (testifying "a loop in a rigid component would necessarily be fixed in size" and the "inherent property of flexibility is essential to the loop structure of the claims"); Ex. 1023, 16–17

Petitioner suggests that because dependent claim 4 narrows claim 1 to a "continuous" filament, the filament of claim 1 presumptively encompasses the patent's "bight" embodiments. Pet. 22–23. We are not, at this stage, persuaded. Petitioner cites no instance in the patent where a "bight" is described as forming or capable of forming a "loop." To the contrary, the patent expressly defines a "bight" as a "U-shaped section between the two ends of the filament." Ex. 1001, 13:32–33. And, even when two bights are used and described as overlapping, the patent discloses that the overlap

[11] The patents at issue in the present case and in the 156 IPR both issued from respective grandchild applications to the '921 patent challenged in the 728 IPR. Ex. 1001, code (60); *see* IPR2025-00156 (Ex. 1001, code (60)).

defines an "encircled area" or "constricting area." *Id.* at 13:57–61 ("In some embodiments, the first [bight] orientation is different from the second [bight] orientation such that the first and second receiving areas 808-A, 808-B overlap and define an encircled area 814, also referred to herein as a constricting area."), Figs. 8–9. Tellingly, the '291 patent does not describe the overlapping bights as forming a "loop." Ex. 1023, 19–20 (citing the several instances in the patent where filaments forming a loop (or loops) are distinguished from filaments that form a bight and, collectively, an "encircled area" or "constricting area").

Petitioner points to a dictionary definition of the word "loop" as meaning to "encircle" and argues the '291 patent's bight embodiments also form a loop as claimed. Pet. 24 (citing Ex. 1014, 1031). That is a definition of the verb form of the word "loop." Ex. 1014, 1031. The claims use the word "loop" as a noun, and the same dictionary defines the noun "loop" as "a shape produced by a curve that bends around and crosses itself" or "a length of thread, rope, or similar material, doubled or crossing itself," which we read as more consistent with the description of the "loop" embodiments described in the '291 patent. *Id.* Moreover, even if an "encircled area" encompassed an area within a loop's interior, it does not follow that an "encircled area" is a "loop." Regardless, an extrinsic dictionary definition does not override the patent's differentiated use of the term "loop" when describing some filament embodiments (like shown in Figures 6 and 7), and "encircled area" or "constricting area" only when describing filaments forming bights.

Patent Owner contends that, even if claim 1 were read to encompass certain bight embodiments as allegedly forming a "loop," such embodiments still require a flexible filament. Prelim. Resp. 22 (citing Ex. 2001 ¶ 67

(testifying "the interlocking bight embodiments shown in Figures 8 and 9 must be flexible" because, if they were not, such bights "would need to be rotated in opposite directions" in order to work, which rotation is not described)). According to Patent Owner, the notion that the bights encompass rigid structures is nowhere described in the patent and is, at best, theoretical. *Id.* Dr. Zalesky's testimony in support of Patent Owner's contention on those points is, at present, unrebutted.

Notwithstanding the discussion above, the parties may consider further addressing the import of dependent claim 4 on the interpretation of the '291 patent's independent claims during trial. If either party intends to rely on additional portions of the patent's Specification or the prosecution history of the '291 patent or related patents in support of their respective interpretations, the parties should ensure that their positions and any supporting evidence are set forth fully in their papers and made of record in this proceeding.[12]

Beyond the intrinsic evidence discussed above, we also find at this stage that extrinsic evidence lends support to Patent Owner's interpretation of a "filament" as requiring flexibility. Patent Owner cites, for example, dictionaries that define a filament as "a single thread or a thin flexible threadlike object, process, or appendage" and "a slender threadlike object or fiber." Prelim. Resp. 28 (citing Ex. 2002 (Merriam-Webster Collegiate

[12] For example, in the related 728 IPR, Patent Owner argued that the Specification's disclosures related to filaments being both "tightened" and "loosened" added support for its interpretation that the claimed filaments are flexible. *See* IPR2025-00728, Paper 13 at 14. In the present case, Petitioner contends inflexible items such as "screws" can also be loosened (Pet. 25) and Patent Owner did not specifically respond on that point.

Dictionary), 467; Ex. 2003 (New Oxford American Dictionary), 644). And Patent Owner cites Mr. Thornton's concession at deposition in related court proceedings that "in the ordinary meaning of filament, it has flexibility." *Id.* (quoting Ex. 2005, 123:1–3); *see also* Ex. 2008 (Thornton patent), 8:7–9, 8:53 (equating a "filament" with a "thread-like element" that can be "laced or threaded" through other structures).

Petitioner's argument that the '291 patent never uses the word "flexible" to describe the filament is literally true but not decisive on this record. *See* Pet. 19–20. Neither does the patent use the words "rigid," "inflexible," or the like to describe a filament. And, as discussed above, at least some (and likely all) embodiments in the patent require that the filament be flexible to form a loop as claimed. At this stage, we find that the evidence is more suggestive that, in its plain and ordinary meaning, the filament of the claims is flexible.

As to whether requiring that a filament be "flexible" injects potential ambiguity into the claims (as potentially a term of degree), evidence indicates a POSA would have understood the level of flexibility needed for the claimed valves to work as described. *See, e.g.*, Ex. 2001 ¶ 71 (testifying the filament would be flexible to the degree needed to loosen or slacken when the actuator is depressed); Ex. 2007, 44:14–20 (testifying, in response to the question "a person of ordinary skill in the art in 2017 would have understood what that level of flexibility would be, wouldn't they?" that "I think they could figure it out").

Finally, the recitation in a related patent's claim that a "first filament is flexible" fails to demonstrate persuasively that flexibility is not a requirement of the filament of the '291 patent's claims. Pet. 24–25 (citing Ex. 1016, claim 1). The claim in question from the related patent is an

apparent instance of redundancy in the language chosen because additional claim elements already suggest that the filament is flexible—and would do so even if the express recitation of "flexible" was missing. *ERBE Elektromedizin GmbH v. Canady Tech. LLC*, 629 F.3d 1278, 1286 (Fed. Cir. 2010) ("[S]urplusage may exist in some claims."). That additional language includes, for example, "a first filament extending in a first loop around the tubular member" with actuators positioned to "tension the first filament . . . thereby decreasing a dimension of the first loop . . . to constrict the lumen of the tubular member." Ex. 1016, claim 1. We are unpersuaded that this other claim justifies construing the phrase "a filament formed in a loop" in the claims of the '291 patent as encompassing flexible *and inflexible* structures. *Kraft Foods, Inc. v. Int'l Trading Co.*, 203 F.3d 1362 (Fed. Cir. 2000) (explaining "[t]hat the patentee chose several words in drafting a particular limitation of one claim, but fewer (though similar) words in drafting the corresponding limitation in another, does not mandate different interpretations of the two limitations").

We will revisit the interpretation of the term "filament" to the extent needed on a fully-developed trial record. Preliminarily, however, we conclude that the evidence supports Patent Owner's position and a POSA would have understood the plain and ordinary meaning of the claimed filament as being a flexible length of material (e.g., one or more string(s), wire(s), tape(s)).[13]

[13] We need not adopt Patent Owner's inclusion of "strands" in its proposed construction to resolve the controversy before us. Prelim. Resp. 20.

D. Asserted References

Petitioner asserts, and Patent Owner does not dispute, that Schaffer, Hartley, Eller, and Garrison are each prior art under 35 U.S.C. § 102(a)(1). Pet. 27.

1. Schaffer (Ex. 1005)

Schaffer is a U.S. patent application that published December 4, 2003. Ex. 1005, code (43). Schaffer is titled "Composite Stasis Valve" and describes a "valve for blocking the flow of gas or fluid with or without an instrument in place within the gas/fluid path." *Id.* at Abstr., code (54); *see also id.* ¶¶ 2–3 (disclosing that Schaffer "relates to catheters, in particular to composite fluid-stasis valves for use with catheters" and "[f]luid stasis mechanisms are commonly used to prevent loss of fluids from the insertion site of a catheter").

An embodiment of Schaffer's fluid-stasis valve, including Petitioner's annotations, is shown below.

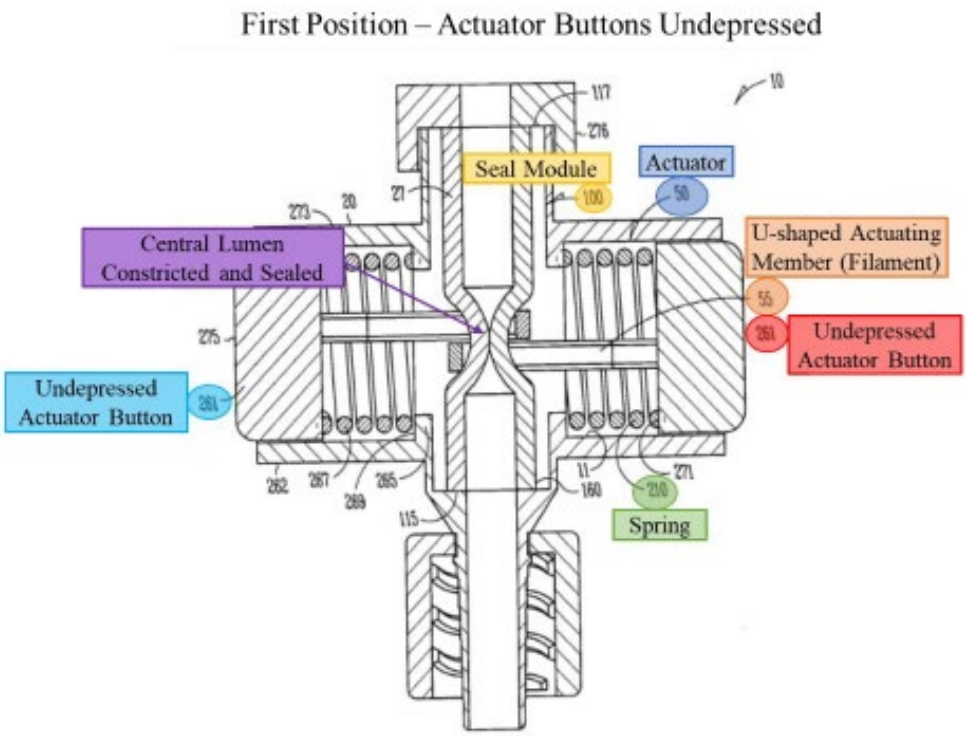

Fig. 32

Pet. 28 (Ex. 1008, Fig. 32[14] (annotated)); Ex. 1005, Fig. 32, ¶ 75 ("FIGS. 30–34 illustrate one embodiment of the stasis valve 10 including a seal module 100 having a lumen sized to allow the passage of fluids or gases."); Ex. 1008, 16–19 (Figs. 30–34). Schaffer's Figure 32, above, is a cross-sectional view of valve 10 in a "first position," where actuator buttons 261 (light blue and red highlights) are undepressed, allowing seal module 100 (yellow highlight) to take on a collapsed configuration such that a central lumen (purple highlight) is at least partially collapsed/constricted and sealed by a compressive force provided by spring(s) (green highlight), which force is applied to U-shaped actuating member(s) 55 (orange highlight) that Petitioner argues are a "filament." Ex. 1005, Fig. 32, ¶¶ 75–77; Pet. 28.

[14] Petitioner uses drawings from the Schaffer application submitted during prosecution (Ex. 1008) due to those drawings' improved clarity versus the version of the drawings appearing in Schaffer as it published. Pet. 5 n.3.

Schaffer discloses that, in the first position, actuating members 55 "are, in one option, disposed at least partially circumferencially [*sic*] disposed about" the seal module "depressing and at least partially collapsing a portion 108 of the containment structure 160 by a compressive force 67 (e.g., by a spring 210)." Ex. 1005 ¶ 77. Schaffer teaches actuating members may optionally comprise aluminum or plastic. *Id.* ¶¶ 81, 82 (actuating members and buttons may, for example, be machined from aluminum).

When the actuator buttons are pressed, the valve takes on a "second [open or unsealed] position." Ex. 1005 ¶ 77, Fig. 34 (showing the valve with both buttons depressed such that central portion of the valve lumen/seal module retracts to an unsealed configuration). According to Schaffer:

> In the second position, the actuators 50 are disposed away from a portion 108 of the seal module 100 by a compressive force 67 (e.g., by depressing the distal end 275 of the actuator button 261). As each actuator button 261 is depressed, each actuator 50 slides along the cylindrical interior wall 11 of the housing 20. The proximal end 273 of each actuator button 261 compresses the distal end 271 of each resilient member 267 which in turn, the proximal end 269 of each resilient member 267 compresses against the inner flange wall 265 of the housing 20. Such movement allows each engaged actuating member 55 to forcibly disengage opposing outer walls 27 of seal module 100 allowing the portion 108 of the containment structure 160 to retract to an uncollapsed configuration where gases and fluids can pass therethrough.

Id. ¶ 77, Fig. 34.

2. Hartley (Ex. 1006)

Hartley is a U.S. patent application that published June 26, 2003. Ex. 1006, code (43). Hartley is titled "Access Valve" and relates to an access valve for laparoscopic or intralumenal deployment devices. *Id.* at Abstr., code (54); *see also id.* ¶ 3 ("The invention will be discussed in . . .

relation to fluid flow prevention and access valves in medical applications for instance where it is desired to seal around a catheter or other instrument . . . to prevent loss of blood or other fluid.”).

Hartley’s Figure 5 is reproduced below.

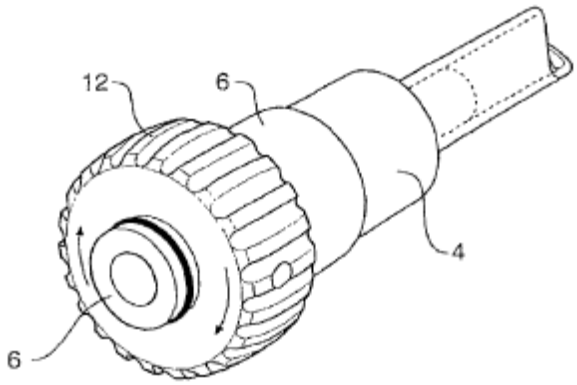

Fig 5

Ex. 1006, Fig. 5. Figure 5 above is a perspective view of an illustrative delivery catheter and constriction valve described in Hartley. *Id.* ¶ 29. The valve includes, *inter alia*, catheter body 4, cylindrical housing 6, and rotary actuator 12. *Id.* ¶ 31.

The action of Hartley’s valve is more clearly seen in Figures 3 and 4, reproduced side-by-side below.

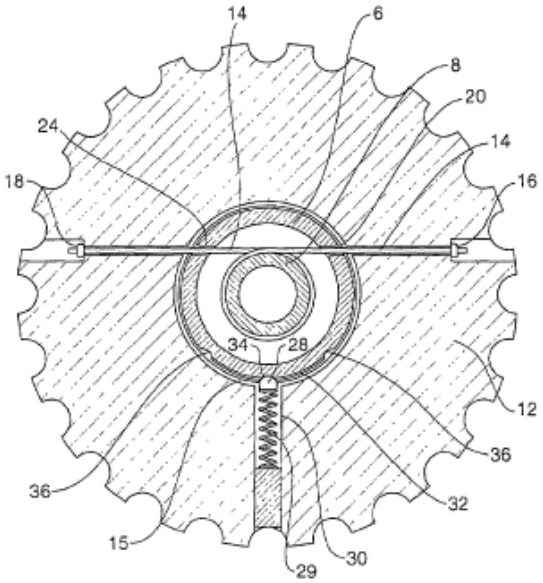

Fig 3

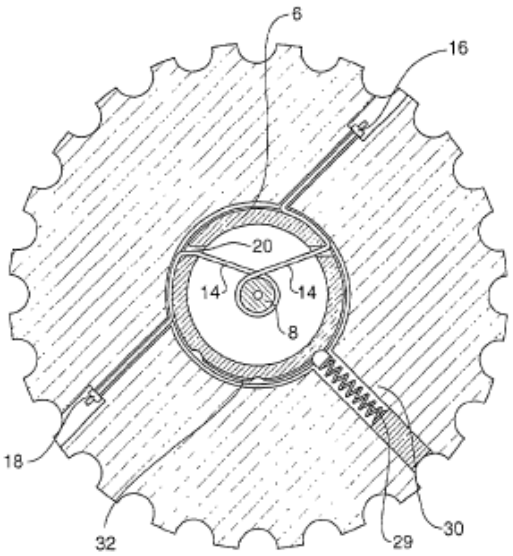

Fig 4

Ex. 1006, Figs. 3–4. Figures 3 and 4 of Hartley are top, cross-sectional views of a constriction valve, showing, respectively, the valve in an open and closed configuration. *Id.* ¶¶ 27–28, 31–34. In the open configuration (above left), rotary actuator 12 is mounted to cylindrical housing 6, and a string 14 is mounted to portions of the rotary actuator with knots 16, 18. *Id.* ¶ 31. String 14 (or another suitable flexible member) is wound around a cylindrical elastomeric diaphragm 8. *Id.*; *see also id.* ¶¶ 16–17 ("The flexible member may be a string, suture or band or other suitable material.").

Hartley teaches that "[r]otation of the rotary actuator 12 with respect to the cylindrical housing 6 will cause the string 14 to be pulled in both directions at once and hence the cylindrical diaphragm 8 to be constricted" and sealed as shown in Figure 4 (above right). Ex. 1006 ¶¶ 31, 34. According to Hartley, its invention provides "an access or constriction valve arrangement which will close over a range of diameters of devices passed through the valve or can close completely down to be self[-]sealing." *Id.* ¶ 37.

3. Eller (Ex. 1007)

Eller is a U.S. patent that issued May 29, 2018, from an application filed April 17, 2015. Ex. 1007, codes (22), (45). Eller relates to "[s]elective fluid barrier valve devices" and methods of treatment using such devices. *Id.* at Abstr.

Eller describes "a selective fluid barrier device compris[ing] a housing, an actuator, a sleeve, a wire member, and a connector." Ex. 1007, Abstr. "The sleeve defines a passageway that extends through the [valve]" and "[t]he actuator is movable between a first position and a second position" where the first position allows fluid to pass through the sleeve and, in the second position, fluid cannot pass through the sleeve. *Id.*

An embodiment of Eller's selective fluid barrier valve device is shown in Figure 15 below.

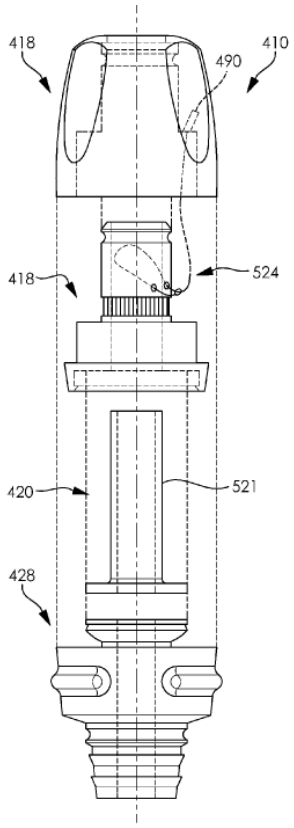

FIG. 15

Ex. 1007, Fig. 15; *see also id.* at Figs. 1–2 (perspective and exploded views of similar valve device). Figure 15, reproduced above, is an exploded view of an illustrative selective fluid barrier valve of Eller. The valve device 410 includes, among other features, actuator 418, sleeve 420, and a wire member 422 (not labeled) with a first end 524 attached to actuator 418 within cavity 490. *Id.* at 21:37–22:10 ("wire member can be positioned such that it extends at least one full revolution around the outer surface of the sleeve"); *see also id.* at Figs. 16–17 (showing wire 422 looped around sleeve 420 within housing 416). As disclosed in Eller, movement (e.g., rotation) of the actuator from its first position to its second position pulls the wire member to constrict and close sleeve 420. *See, e.g.*, *id.* at 22:25–31, 1:55–2:6 (disclosing that, in the second configuration, "the sleeve passageway is closed and prevents fluid from passing"). Eller further teaches that the valve device can "be biased to the second [(closed)] configuration" by, for example, using a spring. *Id.* at 19:22–30.

Eller teaches that its disclosure applies to many types of actuators. Ex. 1007, 8:30–44. According to Eller, "while a rotatable member 29 has been illustrated, a selective fluid barrier valve device can include any suitable actuator capable of moving . . . between a first configuration and a second configuration. Skilled artisans will be able to select a suitable actuator" and "[e]xample actuators . . . include rotatable actuators, linear actuators, slidable actuators . . . and any other actuator considered suitable for a particular embodiment." *Id.*

Eller discloses that a "wire member . . . can have any suitable structure and comprise any suitable number of strands and/or fibers that are twisted, or otherwise interconnected to one another." Ex. 1007, 15:61–16:6 (teaching "wire member can comprise a suture or a cable"). Eller discloses

that "[a]ttachment between a wire member and a housing and/or an actuator can be accomplished using any suitable method or technique" including, for example, "adhesives, welding, [or] fusing." *Id.* at 14:37–53.

4. Garrison (Ex. 1011)

Garrison is a published U.S. patent application, which published June 25, 2015. Ex. 1011, code (43). Garrison relates generally to medical devices and methods for treating ischemic stroke. *Id.* ¶ 2.

Garrison discloses an aspiration catheter system that includes an aspiration catheter. *Id.* at Figs. 1–3, 34, ¶¶ 54, 98. Figure 34 of Garrison, with Petitioner's annotations is reproduced below.

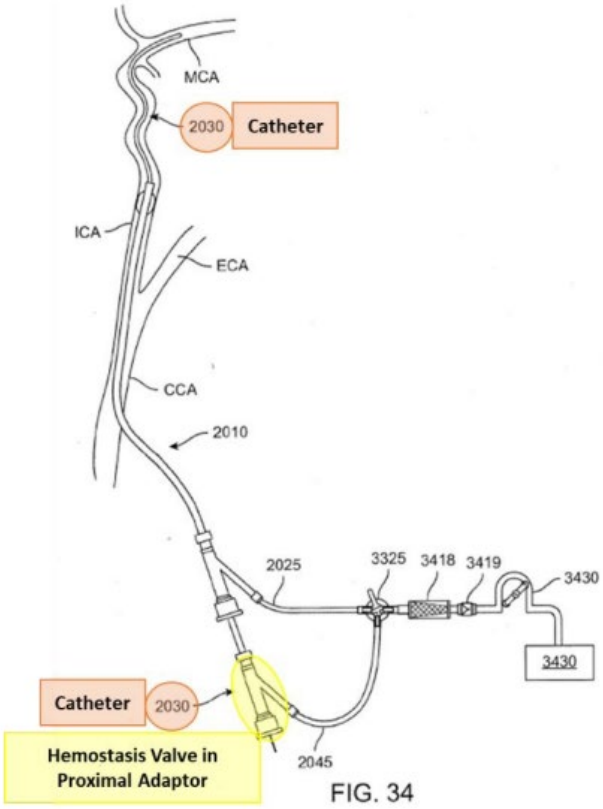

Pet. 92 (Ex. 1011, Fig. 34 (annotated)). Figure 34 above shows a perspective view of a system for treating an artery with active aspiration. Ex. 1011 ¶ 29. The system includes, among other features, an arterial access

device 2010 and at least one catheter 2030 (highlighted orange above). *Id.* ¶ 54 (disclosing that the catheter may be positioned within an artery at or near the target site where "[t]he catheter 2030 may then be used to apply aspiration to the occlusion").

Garrison's aspiration system may also include a hemostasis valve (highlighted yellow in Figure 34 above). "[A] separate hemostasis valve may be attached to proximal hub 2065, to allow introduction of devices such as a microcatheter, guide wire, or thrombectomy device while preventing or minimizing blood loss during the procedure." *Id.* ¶ 98. "Alternatively, the hemostasis valve may be integral to the catheter proximal adapter." *Id.* (disclosing, e.g., that "this valve is an adjustable-opening valve such as a Tuohy-Borst or rotating hemostasis valve (RHV)").

E. Anticipation by Schaffer (Ground 1)

Petitioner contends that Schaffer describes a valve having all the elements of claims 1–3, 5–8, 12–17, and 19, and, thus, Schaffer anticipates those claims. Pet. 27–89.[15] We focus on claim 1 below, noting that each of the challenged claims requires a valve comprising, among other features, a "filament formed in a loop around the tubular member." *See, e.g.*, Ex. 1001, 22:18–30 (claim 1).

According to Petitioner, Schaffer's actuating members are a "filament" as claimed. Pet. 39–48. Petitioner reproduces Figure 31 of Schaffer below, with Petitioner's annotations.

[15] Petitioner intersperses its anticipation and obviousness analyses for Grounds 1–4 throughout pages 27–89 of the Petition.

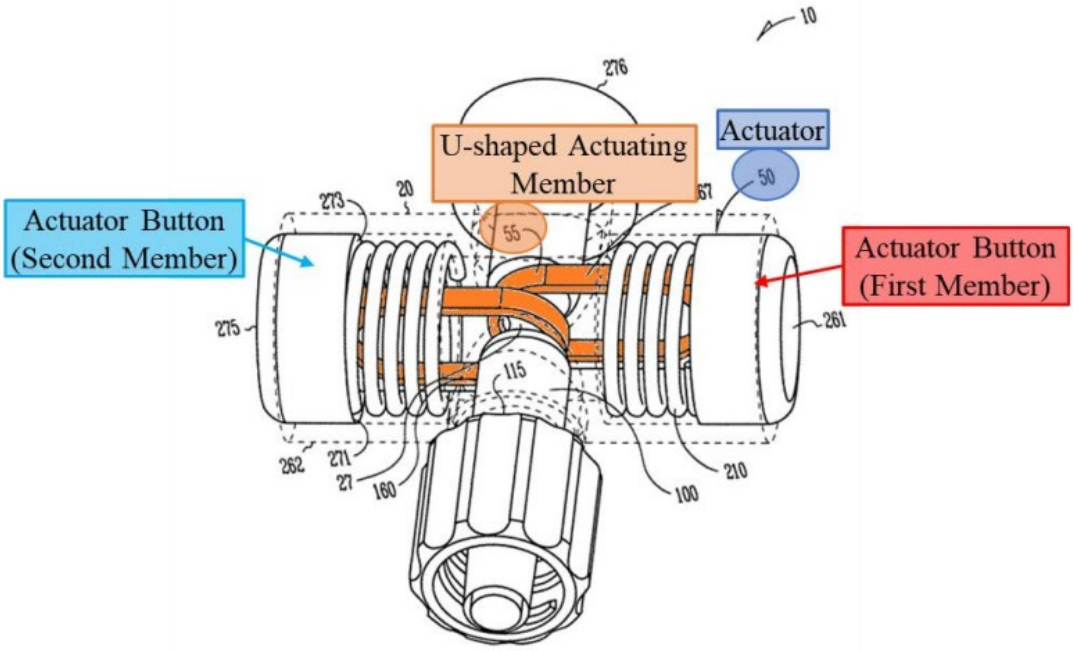

Fig. 31

Pet. 40; Ex. 1005, Fig. 31 (annotated), ¶ 76; Ex. 1008, 81 (Fig. 31). The image above is a perspective view of a stasis valve 10 comprising an actuator 50 (dark blue) with opposing actuator buttons (light blue and red highlights) and two U-shaped actuating members 55 (orange highlights).

Petitioner argues that Schaffer's actuating members, as depicted above, "resemble a ribbon, flat wire, sheet, or tape" and, therefore, under Petitioner's claim interpretation, those actuating members are a "filament" as recited in the challenged claims. Pet. 40–43 (citing Ex. 1003 ¶¶ 94–98).

We are unpersuaded that Schaffer describes a valve with a filament as claimed. If, as construed above (*supra* Section III.C), the filament requires flexibility, Petitioner has not demonstrated that Schaffer describes such a feature in its valves. Instead, we agree with Patent Owner that a POSA would more likely understand Schaffer's two U-shaped actuating members as being rigid features. Prelim. Resp. 33–36. We agree with Patent Owner that Petitioner implicitly admits that Schaffer's actuating members are rigid

insofar as Petitioner argues those members would form gaps for fluid leakage around tools inserted through the central lumen when in use and compared to the use of a flexible string or wire (of Hartley or Eller). Prelim. Resp. 34 (citing Pet. 51). We also find Dr. Zalesky's interpretation of Schaffer more plausible than Mr. Thornton's on the question of whether a POSA would have regarded Schaffer's actuating members as being rigid structures. Ex. 2001 ¶¶ 78–85 (testifying, *inter alia*, that a POSA would have understood from Schaffer's disclosure about making the actuator and actuating members from machining pre-existing amounts of metals and/or plastics, and further explaining that flexible parts would deform and be difficult to machine through conventional techniques); Ex. 1005 ¶¶ 81–82.

Mr. Thornton opines that Schaffer's disclosed manufacturing techniques for the actuator/actuating members are only examples and "a person of ordinary skill in the art could have simply purchased pre-made [flexible] flat wire or plastic tapes or ribbons." Ex. 1003 ¶ 96. Such opinion invokes, at best, obviousness-based reasoning. This does not establish that Schaffer alone describes a filament sufficient to anticipate the claims. Furthermore, Mr. Thornton's opinion that a POSA "would have understood that Schaffer's U-shaped actuating members would have preferably been formed from a thin, flexible material" finds no support in Schaffer itself. Ex. 1003 ¶ 95. This opinion is also at odds with his testimony in related cases about an alleged formation of gaps with Schaffer's actuating members, which suggested those members had a set "size" and lacked flexibility. *See* IPR2025-01157 (Ex. 1003 ¶ 81 (testifying a POSA "would have recognized that Hartley's flexible string may better seal the valve than Schaffer's metallic/plastic actuating members" because, "if a tool did not fit the size of

Schaffer's U-shaped members, small gaps could form between the tool and valve's lumen")).[16]

Because we are unpersuaded on the present record that Schaffer describes a valve comprising a "filament" as claimed, we disagree that Schaffer anticipates the challenged claims.

F. Obviousness over Schaffer (Ground 2)

Petitioner argues that, even if Schaffer's actuating members are rigid, a POSA "would have found it obvious to use 'flexible' materials to form the actuating members." Pet. 43 (citing Ex. 1003 ¶ 98). According to Petitioner, a POSA would have known that "using more flexible actuating members allows the members to more closely conform to the [inserted] tools" and "would have reasonably expected flexible materials, like a string or wire, to work in Schaffer's device." *Id.* (citing Petitioner's obviousness analysis for the combinations of Schaffer with Hartley or Eller, as asserted under Grounds 3 and 4).

Petitioner's analysis and evidence for Ground 2—obviousness over Schaffer alone—is unpersuasive.[17] Petitioner provides insufficient detail specific to Ground 2 to explain precisely how Schaffer's valve would be

---

[16] Mr. Thornton's opinion on this specific topic has evolved somewhat in more recent submissions—in the present proceeding, he testifies that a POSA "would have recognized that if Schaffer's U-shaped actuating members were not sufficiently flexible and conformable to form a perfect seal for a wide range of tools, small gaps could form between the tool and the valve's lumen." Ex. 1003 ¶ 107.

[17] Petitioner's further contention in a footnote that the claims would have been obvious over Schaffer because "anticipation is the epitome of obviousness" is unavailing on this record. Pet. 30 n.6. Based on the interpretation of the claims discussed above, we are unpersuaded that Schaffer anticipates the challenged claims.

modified to arrive at the claimed subject matter. To the extent Petitioner alludes to Hartley and Eller and Petitioner's more-detailed combinations of Schaffer with those other references, Petitioner's challenge is subsumed under Grounds 3 and 4 and will be addressed there. Regarding alleged obviousness, we suggest Petitioner focus during trial on those grounds (i.e., Grounds 3, 4, 6, and 7)[18] for which Petitioner provided more developed arguments.

G. Obviousness over Schaffer and Hartley (Ground 3) or Schaffer and Eller (Ground 4)

Petitioner contends that claims 1–8, 12–17, and 19 would have been obvious over Schaffer and Hartley (Ground 3) or Schaffer and Eller (Ground 4). Pet. 30–65 (allegations related to claim 1), 65–89 (remaining challenged claims). The discussion above concerning whether the claims require a "flexible" filament and whether Schaffer discloses this subject matter is not decisive because there is no dispute that both Hartley and Eller disclose, *inter alia*, a "filament formed in a loop" within the scope of the claims. *See, e.g.*, *id.* at 49–55 (discussing Hartley's teaching of, *inter alia*, a flexible string that may be wrapped around seal module, forming a loop, in the modified Schaffer valve), 55–61 (same with respect to Eller's wire); *see, e.g.*, Prelim. Resp. 44–75 (arguing against Petitioner's proffered reasons for combining the prior art, but not identifying a limitation that is missing in the combination of Schaffer with Hartley or Eller).

[18] Ground 5, although involving an obviousness challenge, relies solely on Schaffer for teaching the filament limitations and, thus, has the same deficiency as discussed for Grounds 1 and 2.

Our discussion below focuses on Petitioner's challenge to claim 1 as illustrative. We also focus primarily on the Schaffer/Hartley combination because the parties' arguments under Grounds 3 and 4 substantially overlap.

Petitioner argues Schaffer teaches a "hemostasis valve" comprising, *inter alia*, a "support" (i.e., housing) that includes an "actuator" movably coupled to the support. Pet. 30–37 (citing, for example, Schaffer's two circular actuator buttons disposed on opposite sides of the housing, which buttons may be pressed and released to open and close the valve; Ex. 1005 ¶¶ 75–76, Figs. 31–32; Ex. 1003 ¶¶ 83–89). Petitioner argues that Schaffer describes a valve having "a collapsible tubular sidewall defining a lumen carried by the support" as recited in claim 1. *Id.* at 37–39 (citing Schaffer's seal module 100 comprising "a flexible, elongate tubular structure" that is at least partially collapsed by a compressive force; Ex. 1005 ¶¶ 49, 51, 54, 75, 77, Figs. 12, 32, 34; Ex. 1003 ¶¶ 90–92). Petitioner further argues that Schaffer discloses a "spring," which comprises Schaffer's two resilient members (i.e., springs) that bias Schaffer's actuator buttons to the first (closed) position. *Id.* at 62–65 (citing, e.g., Ex. 1005 ¶ 76, Fig. 32; Ex. 1003 ¶¶ 132–135 (testifying that, if Schaffer's two actuating members were replaced with Hartley's string, the spring-actuated buttons would pull the ends of this string and thereby reduce the diameter of the loop and lumen)).

Petitioner, citing Hartley's flexible string as a "filament," argues that it would have been obvious to substitute Hartley's string for Schaffer's two U-shaped actuating members and, therefore, meet claim 1's recited "filament formed in a loop around the tubular sidewall," which filament would operate as claimed to reduce the diameter of the loop and lumen when the string's ends are pulled. *Id.* at 49–55 (citing, e.g., Ex. 1006 ¶¶ 31, 34, 37, Figs. 1–4; Ex. 1003 ¶¶ 103–117).

The image below illustrates Petitioner's proposed combination of Schaffer and Hartley.

Demonstrative Illustration
Schaffer + Hartley's String

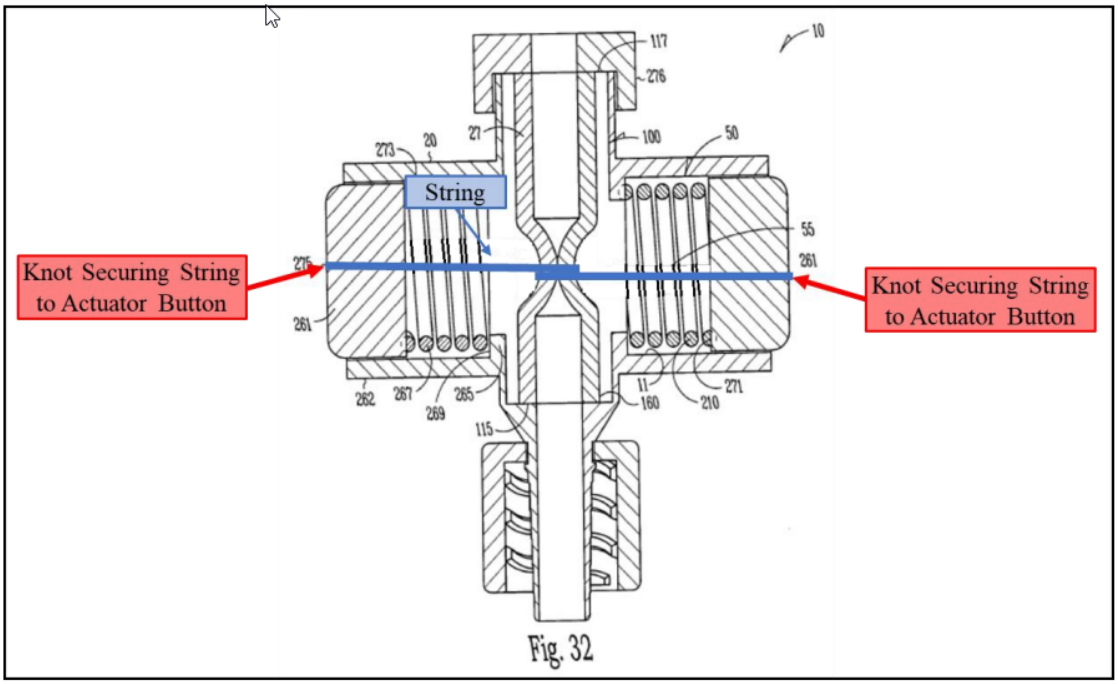

Pet. 52–53 (Petitioner's annotated/modified version of Schaffer's Figure 32). The above image shows Schaffer's valve in cross section (from Schaffer's Figure 32) modified to replace Schaffer's actuating members with Hartley's flexible string (blue highlight), which wraps around the outer wall of a central portion of seal module 100. *Id.* (citing, e.g., Ex. 1003 ¶¶ 112–117; Ex. 1006 ¶ 31). Petitioner contends that, by a "simple" technique taught in Hartley, a POSA would have been able to attach the string's ends (e.g., by knots) to the respective actuator buttons of Schaffer (red highlights). *Id.*

Petitioner contends that a POSA would have found it obvious to substitute Hartley's string for Schaffer's actuating members, arguing, *inter alia*, that such modification entails substitution of one known element (Hartley's string) for another (Schaffer's actuating members) to yield the

predictable result of constricting Schaffer's valve to form a seal. Pet. 50–55. According to Petitioner, a POSA would have recognized that Hartley's string "may seal more effectively across a wider range of tool diameters and shapes than Schaffer's U-shaped actuating members." *Id.* at 51 (citing, e.g., Ex. 1003 ¶¶ 106–107). Petitioner contends that, depending on the inserted tool, "Schaffer's actuating members may form small gaps between the valve's seal module and the tool's outer surface." *Id.* (depicting "gaps" and arguing "Hartley's string could improve upon this potential issue because the string more precisely conforms to the tool diameters and shapes"); Ex. 1006 ¶ 37 (teaching that Hartley's string can "close over a range of diameters of devices passed through the valve or can close completely down to be self-sealing"); *see also* Pet. 52 (arguing a "finite number of materials to use for constricting a tubular member in a hemostasis valve in 2017" (citing Ex. 1003 ¶ 110)).

Petitioner's evidence supports a preliminary determination that a POSA would have regarded the proposed change as involving a reasonably straightforward substitution of a known, alternative feature for constricting a hemostasis valve lumen and avoiding leaks. That it may have taken some creativity to carry out the combination (e.g., connecting the string to two as opposed to one movable actuator as in Hartley) does not necessarily defeat a finding of obviousness. *Facebook, Inc. v. Windy City Innovations, LLC*, 973 F.3d 1321, 1343 (Fed. Cir. 2020) (recognizing that the ordinary "creativity" exhibited by a POSA is part of the obviousness analysis); Ex. 1003 ¶¶ 104, 111–114 (testifying about how Hartley teaches fixing the string by knots to an actuator to allow the string to be pulled in opposite directions for sealing of the valve, and how this fixation technique could be applied to Schaffer's

buttons allowing the string to compress and seal the central lumen when pulled by spring-activated buttons of Schaffer).

Patent Owner makes several counterarguments. According to Patent Owner, the POSA would not have been motivated to combine Schaffer and Hartley as proposed because the fluid "gaps" imagined by Petitioner do not, in fact, exist with Schaffer's valves. Prelim. Resp. 45–54 (asserting that Schaffer's valves use rigid actuating members and a highly-compliant seal member that together provide gap-free sealing). Patent Owner argues that the substitution proposed by Petitioner is not "simple" and a POSA would have understood, from Schaffer itself, that more plausible and effective options were available for complete sealing in a hemostasis valve. *Id.* at 54–67 (arguing a string would lack efficacy if trying to seal around multiple instruments/tools inserted into the lumen, and a string adds unpredictability). Patent Owner argues that Petitioner's putative "obvious-to-try" reasoning should be rejected because Petitioner has not shown that solutions for constricting a valve lumen were finite, identifiable, and known. *Id.* at 67–70. Lastly, Petitioner argues that Petitioner's modification impermissibly changes Schaffer's principle of operation. *Id.* at 70–75 (arguing Hartley's string would prevent "forcible disengagement" provided by Schaffer's actuating members, and result in a less durable valve that is harder to manufacture and assemble).

Patent Owner's arguments here parallel arguments raised in several related cases that remain pending. *See, e.g.*, IPR2024-01157, Paper 7 at 35–41 (summarizing and addressing Patent Owner's preliminary arguments concerning the modification of Schaffer's valve to include Hartley's string (or Eller's wire)); IPR2025-00289, Paper 10 at 36–45 (same). Like we explained there, the arguments against the reasons for combining Schaffer

and Hartley (or Eller) are better resolved on a complete record developed through trial. We determine at this time, however, that Petitioner has made a threshold showing, sufficient for institution, that the combination of Schaffer and Hartley discloses all the limitations of claim 1, and that a skilled artisan would have had reasons for combining those references as proposed with a reasonable expectation of success.

Patent Owner raises separate argument for claims 3 and 4. Pet. 76–77. According to Patent Owner: (i) "Petitioner cites no reference that discloses a string/wire attached to and controlled by two independently moveable actuators" to meet the limitations of claim 3; and (ii) "Petitioner cites no reference that discloses 'one continuous filament' . . . that is attached to and controlled by two independently moveable actuators" to meet the limitations of claim 4. *Id.*

This argument is unpersuasive. The question is whether the claimed subject matter would have been obvious over the art's *combined* teachings. And we are satisfied on this record that the limitations cited by Patent Owner are adequately taught or suggested in the combination of the asserted art. *Masimo Corp. v. Apple Inc.*, No. 2022-1894, 2024 WL 111647 at * 3 (Fed. Cir. Jan. 10, 2024) (explaining, "it suffices . . . 'that a person of ordinary skill in the art would have been motivated to combine the prior art in a way such that the combination discloses the claim limitation'").

H. Obviousness over Garrison Combinations (Grounds 5–7)

Petitioner argues that claims 18 and 19 would have been obvious over Garrison and Schaffer (Ground 5), or Garrison and Schaffer in further combination with Hartley or Eller (Grounds 6 and 7). Pet. 90–97; Ex. 1003 ¶¶ 183–200.

Ground 5 is unpersuasive on this record for the reasons given above for Grounds 1 and 2. *See supra* Sections III.E and III.F. Petitioner relies on Garrison for disclosing an aspiration catheter system as recited in claim 18's preamble (if limiting), but Petitioner does not argue or show that Garrison makes up for the deficiencies of Schaffer related to the absence of a valve comprising a "filament" as claimed. Pet. 95 (arguing that "Schaffer, or Schaffer in combination with Hartley or Eller" discloses the claimed filament "for the reasons explained for claim 1").

Because Grounds 6 and 7 rely on the combination of Schaffer with Hartley or Eller for teaching the claimed filament limitations (like discussed above for Grounds 3 and 4), those grounds do not share Ground 5's deficiency. Pet. 95. Petitioner provides argument and evidence, sufficient at this stage, to meet its institution burden regarding its challenge to claims 18 and 19 under Grounds 6 and 7. *Id.* at 90–97; Ex. 1003 ¶¶ 183–202. Insofar as Patent Owner maintains that Grounds 6 and 7 involve the same alleged problems as Grounds 3 and 4 concerning Petitioner's asserted reasons for combining Schaffer with Hartley or Eller to arrive at the claimed subject matter (Prelim. Resp. 75–76), Patent Owner's argument is unavailing at present for the reasons noted above. *See supra* Section III.G.

IV. CONCLUSION

Based on this preliminary record, we determine that Petitioner has shown a reasonable likelihood that it will prevail with respect to at least one of the claims challenged in the Petition. We institute trial on all challenged claims under the grounds raised in the Petition. *PGS Geophysical AS v. Iancu*, 891 F.3d 1354, 1360 (Fed. Cir. 2018) (explaining that institution of *inter partes* review "require[s] a simple yes-or-no institution choice . . . embracing all challenges included in the petition"); 37 C.F.R. § 42.108(a).

Any argument not raised in a Patent Owner Response to the Petition, or as permitted in another manner during trial, shall be deemed forfeited and/or waived even if asserted in the Preliminary Response. *In re Google Tech. Holdings LLC*, 980 F.3d 858, 862–864 (Fed. Cir. 2020) (holding an argument forfeited when not timely raised before the Board); *In re NuVasive, Inc.*, 842 F.3d 1376, 1380–81 (Fed. Cir. 2016) (holding Patent Owner waived an argument addressed in the Preliminary Response by not raising the same argument in the Patent Owner Response).

V. ORDER

In consideration of the foregoing, it is hereby:

ORDERED that, pursuant to 35 U.S.C. § 314(a), *inter partes* review of all challenged claims of the ’291 patent is instituted on the grounds of unpatentability set forth in the Petition; and

FURTHER ORDERED that, pursuant to 35 U.S.C. § 314(a) and 37 C.F.R. § 42.4, notice is given of institution of trial commencing on the entry date of this Decision.

FOR PETITIONER:

Joshua J. Stowell
Joseph R. Re
Brian C. Barnes
KNOBBE, MARTENS, OLSON & BEAR, LLP
Joshua.Stowell@knobbe.com
Joe.Re@knobbe.com
Brian.Barnes@knobbe.com

FOR PATENT OWNER:

Joseph Hamilton
Paul Parker
Matthew Williams
PERKINS COIE LLP
hamilton-ptab@perkinscoie.com
parker-ptab@perkinscoie.com
williams-ptab@perkinscoie.com