US 20170154892A1

(19) United States

(12) Patent Application Publication

OH

(10) Pub. No.: US 2017/0154892 A1

(43) Pub. Date: Jun. 1, 2017

(54) **ELECTRONIC DEVICE AND METHOD FOR FABRICATING THE SAME**

(71) Applicant: **SK hynix Inc.**, Gyeonggi-do (KR)

(72) Inventor: **Kwang-Seok OH**, Gyeonggi-do (KR)

(21) Appl. No.: **15/179,220**

(22) Filed: **Jun. 10, 2016**

(30) **Foreign Application Priority Data**

Nov. 30, 2015 (KR) 10-2015-0168595

Publication Classification

(51) **Int. Cl.**

H01L 27/115	(2006.01)
G06F 12/08	(2006.01)
G06F 13/28	(2006.01)
H01L 27/105	(2006.01)
H01L 23/528	(2006.01)

(52) **U.S. Cl.**

CPC .. ***H01L 27/11556*** (2013.01); ***H01L 27/11582*** (2013.01); ***H01L 27/1052*** (2013.01); ***H01L 23/5283*** (2013.01); ***G06F 13/28*** (2013.01); ***G06F 12/0893*** (2013.01); *G06F 2212/603* (2013.01)

(57) **ABSTRACT**

Provided is an electronic device including a semiconductor memory, The semiconductor memory may include: a first channel layer formed over a substrate and extending in a vertical direction; a first stacked structure comprising a plurality of first interlayer dielectric layers arid a plurality of first gate electrode layers which are alternately stacked along the first channel layer; a first memory layer interpose d between the first channel layer and the first gate electrode layers; a second channel layer formed over the first channel layer and extending in the vertical, direction; a second stacked structure comprising, a plurality of second interlayer dielectric layers and a plurality of second gate electrode layers which are alternately stacked along the second channel layer; a second memory layer interposed between the second channel layer and the second gate electrode layers; a first channel connection pattern formed between the first channel layer and the second channel layer and coupling the first and the second channel layers to each other; and a first etch stop pattern formed between the first and second stacked structures and at substantially the same level as the first channel connection pattern, wherein the first etch stop pattern includes the same material as the first channel connection pattern and is isolated from the first channel connection pattern,

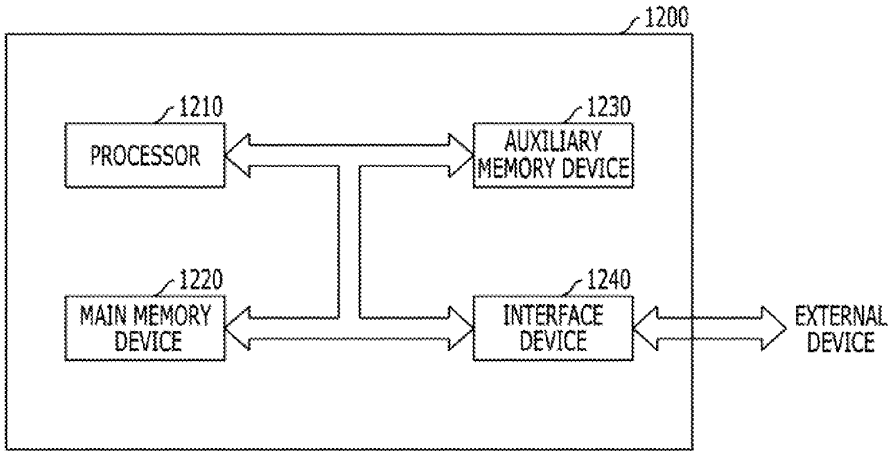

FIG. 1A

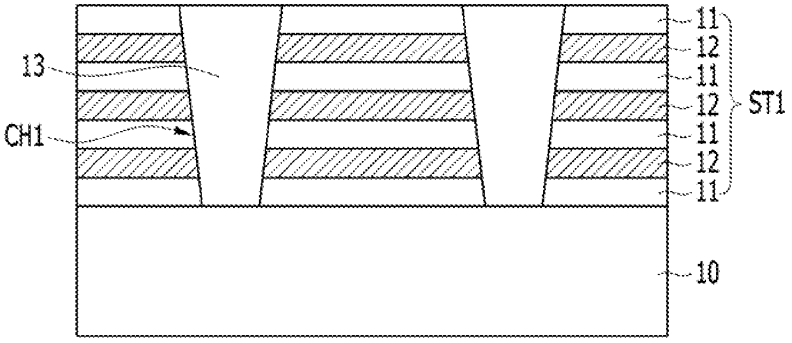
11
12
11
12
11
12
11
ST1
13
CH1
10

FIG. 1B

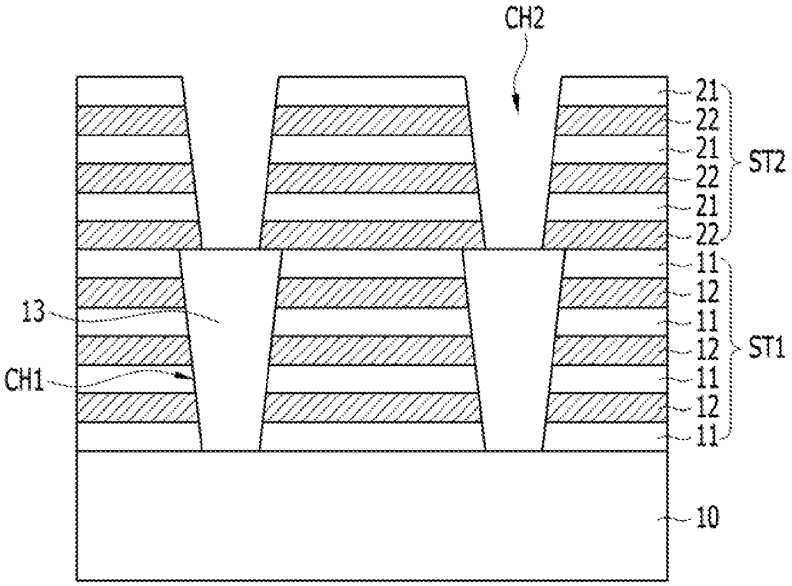
CH2
21
22
21
22
21
22
ST2
11
12
11
12
11
12
11
ST1
13
CH1
10

FIG. 1C

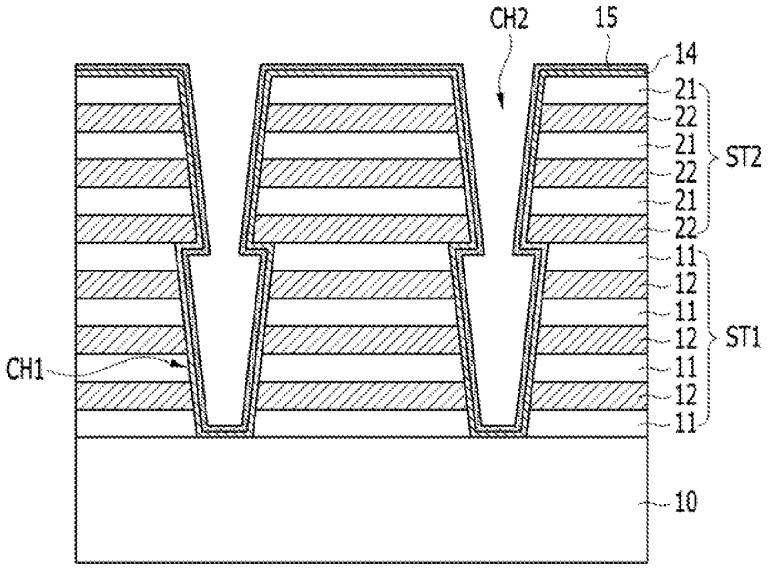
CH2
15
14
21
22
21
22
21
22
ST2
11
12
11
12
11
12
11
ST1
CH1
10

FIG. 1D

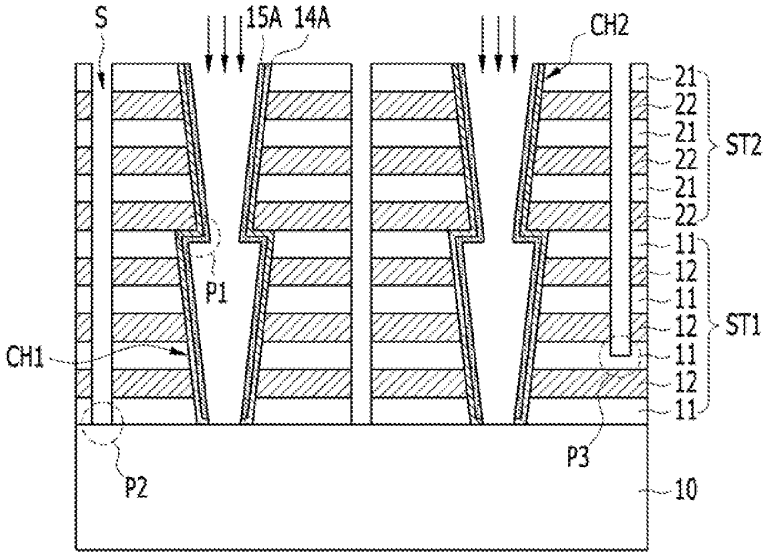
S
15A
14A
CH2
21
22
21
22
21
22
ST2
11
12
11
12
11
12
11
ST1
P1
CH1
P2
P3
10

FIG. 2A

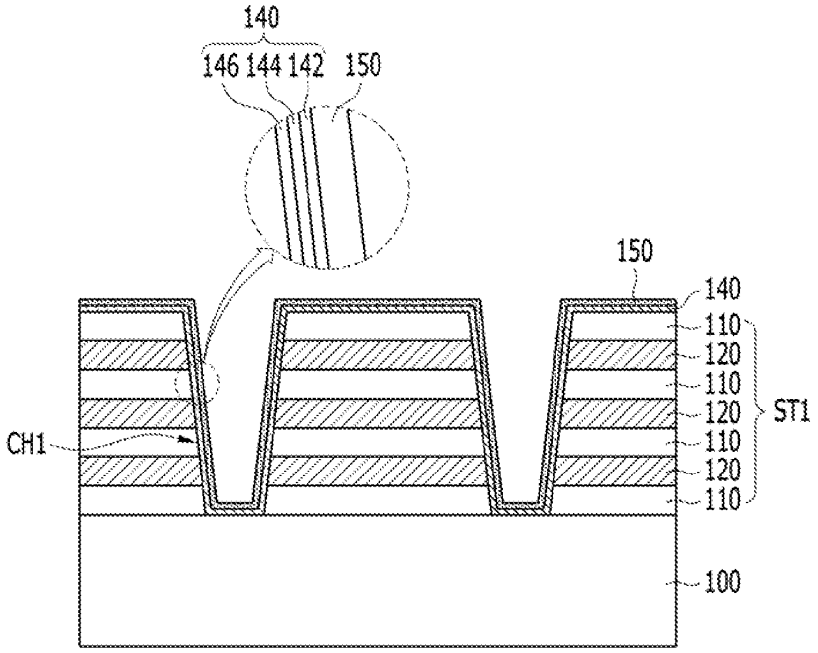
140
146 144 142 150
150
140
110
120
110
120
110
120
110
ST1
CH1
100

FIG. 2B

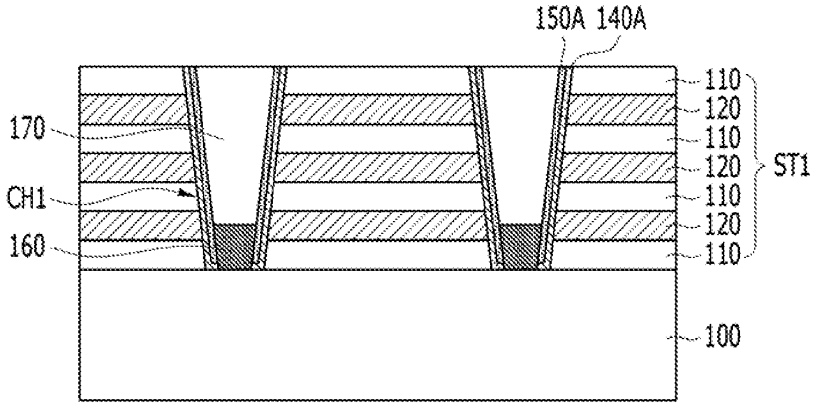
150A 140A
110
120
110
120
110
120
110
ST1
170
CH1
160
100

FIG. 2C

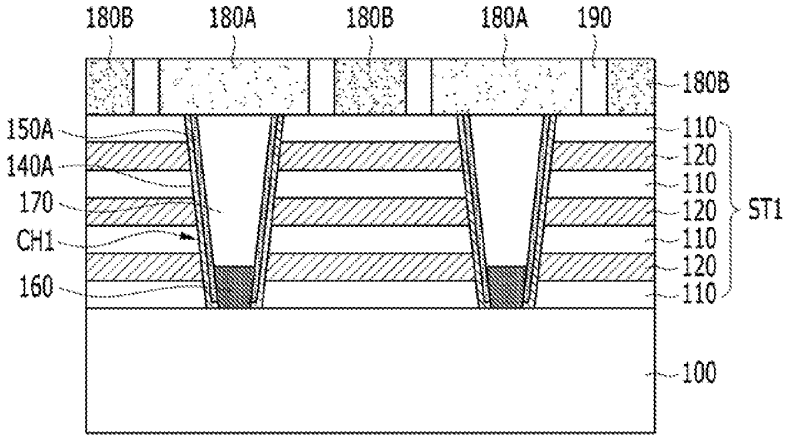
180B
180A
180B
180A
190
180B
150A
140A
170
CH1
160
110
120
110
120
110
120
110
ST1
100

FIG. 2D

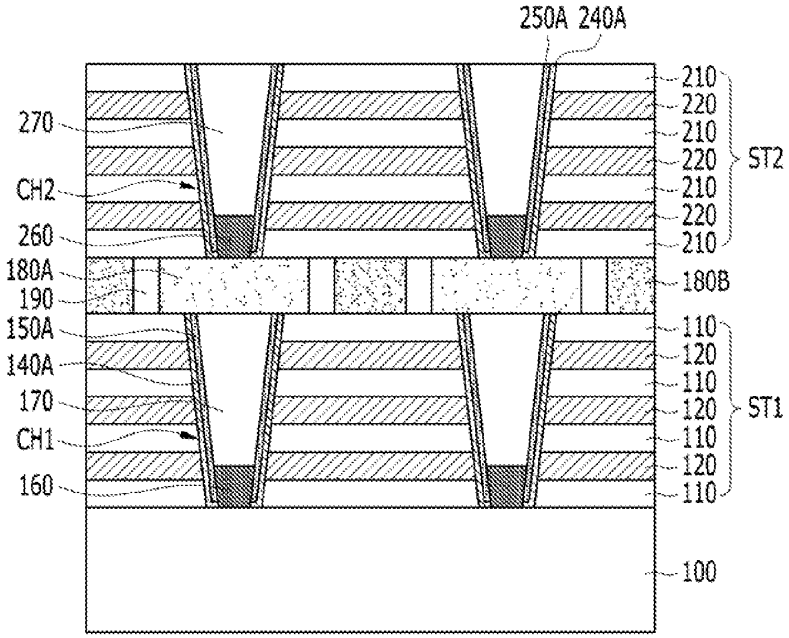
250A 240A
270
CH2
260
180A
190
150A
140A
170
CH1
160
210
220
210
220
210
220
210
ST2
180B
110
120
110
120
110
120
110
ST1
100

FIG. 2E

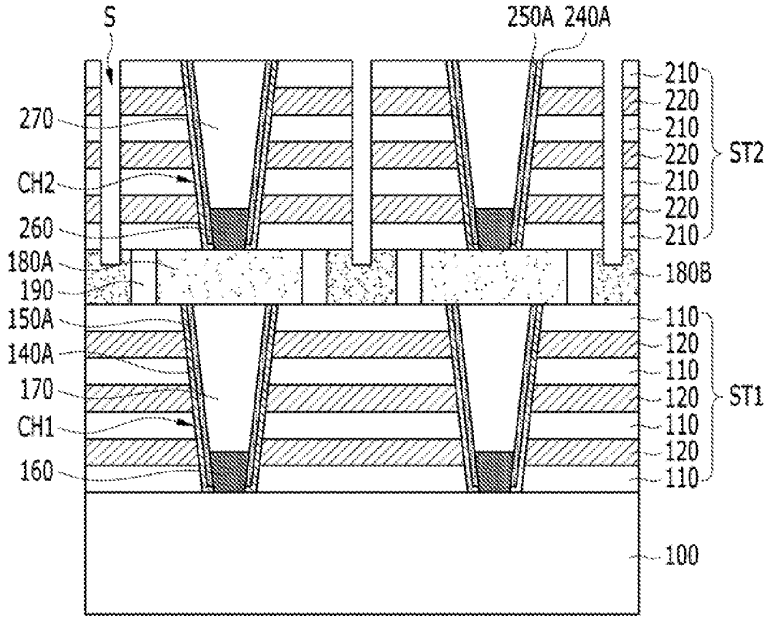
S
250A 240A
270
CH2
260
180A
190
150A
140A
170
CH1
160
210
220
210
220
210
220
210
ST2
180B
110
120
110
120
110
120
110
ST1
100

FIG. 2F

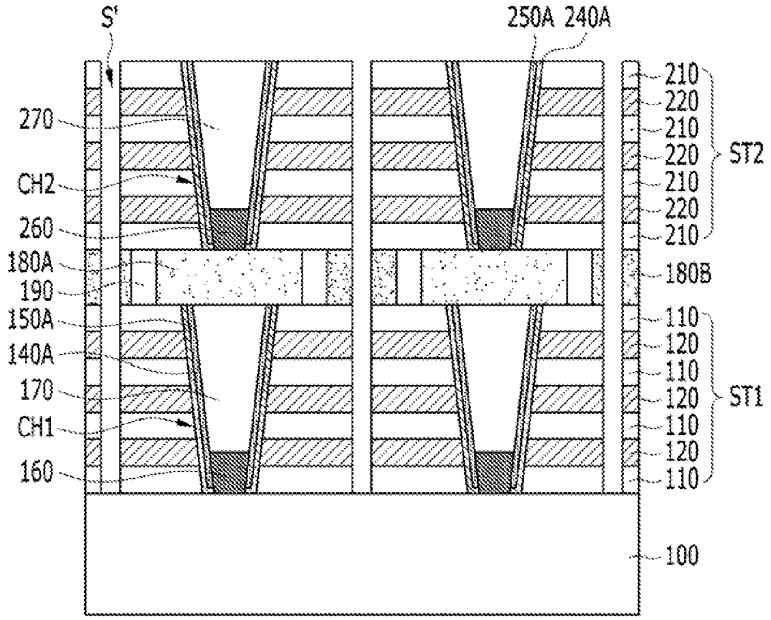
S'
250A 240A
270
CH2
260
180A
190
150A
140A
170
CH1
160
210
220
210
220
210
220
210
ST2
180B
110
120
110
120
110
120
110
ST1
100

FIG. 3A

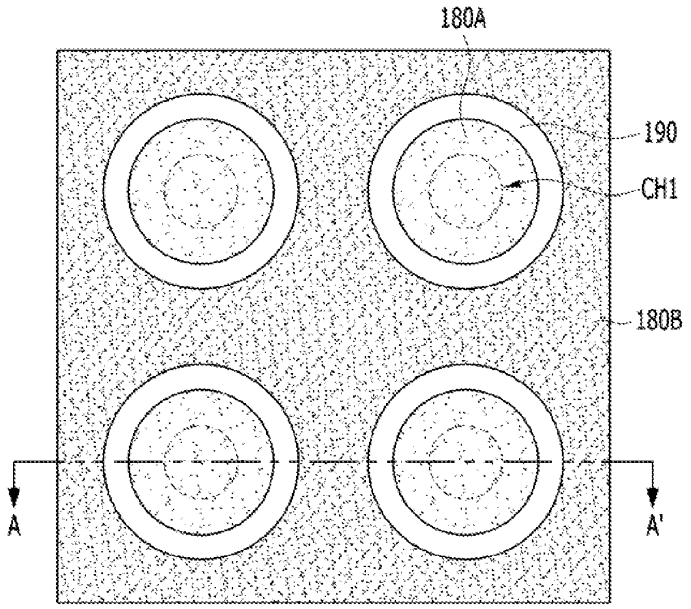

FIG. 3B

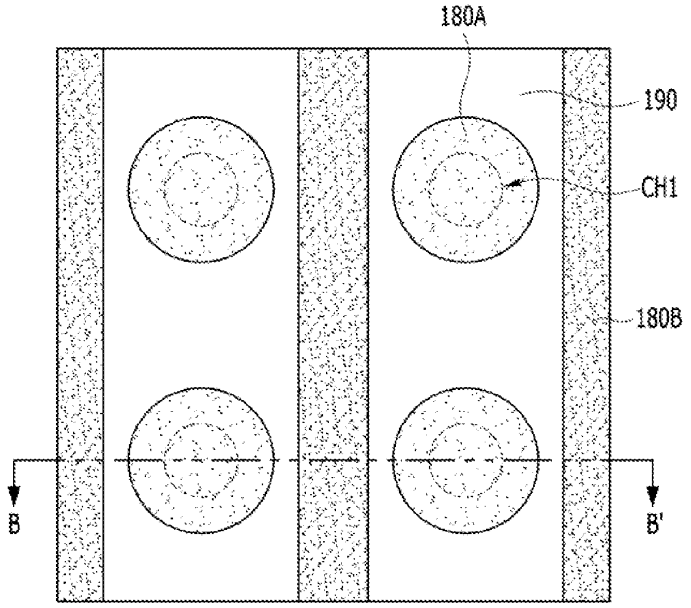

FIG. 4A

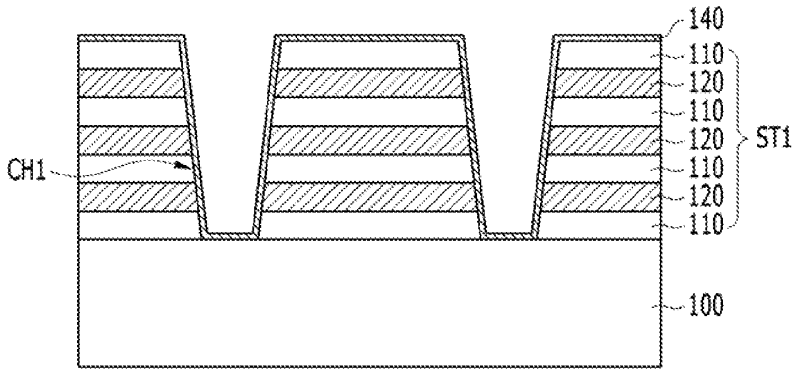
140
110
120
110
120
110
120
110
ST1
CH1
100

FIG. 4B

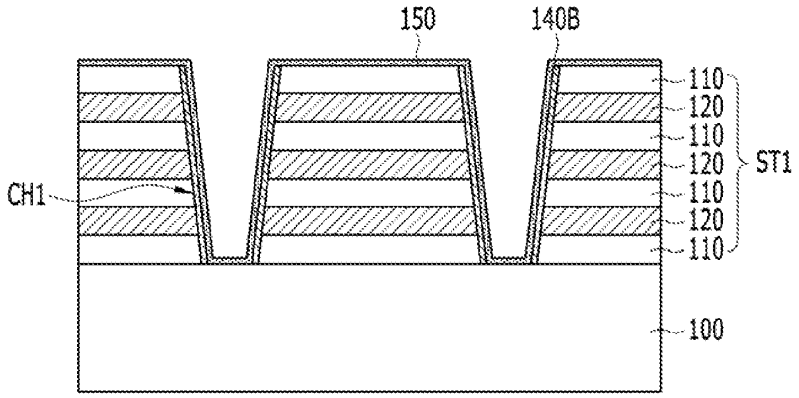
150
140B
110
120
110
120
110
120
110
ST1
CH1
100

FIG. 4C

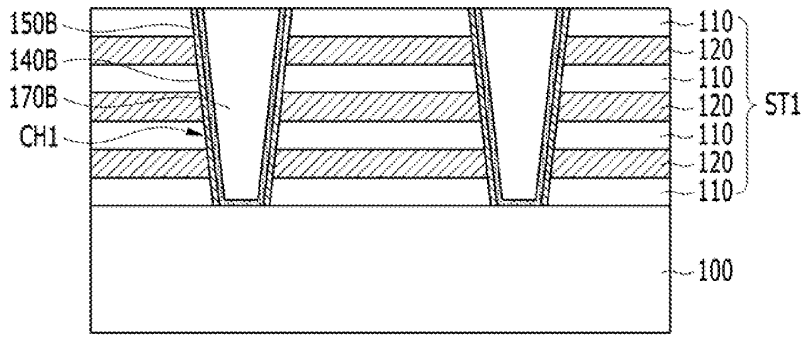
150B
140B
170B
CH1
110
120
110
120
110
120
110
ST1
100

FIG. 4D

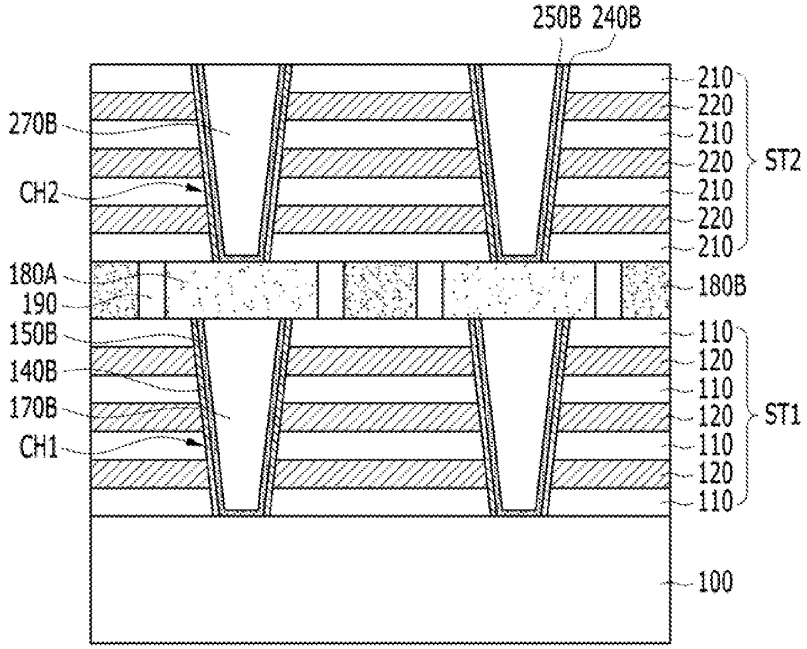
250B 240B
270B
CH2
210
220
210
220
210
220
210
ST2
180A
190
180B
150B
140B
170B
CH1
110
120
110
120
110
120
110
ST1
100

FIG. 5A

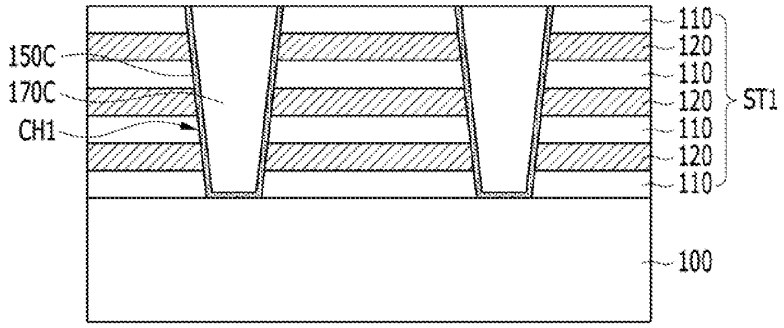
150C
170C
CH1
110
120
110
120
110
120
110
ST1
100

FIG. 5B

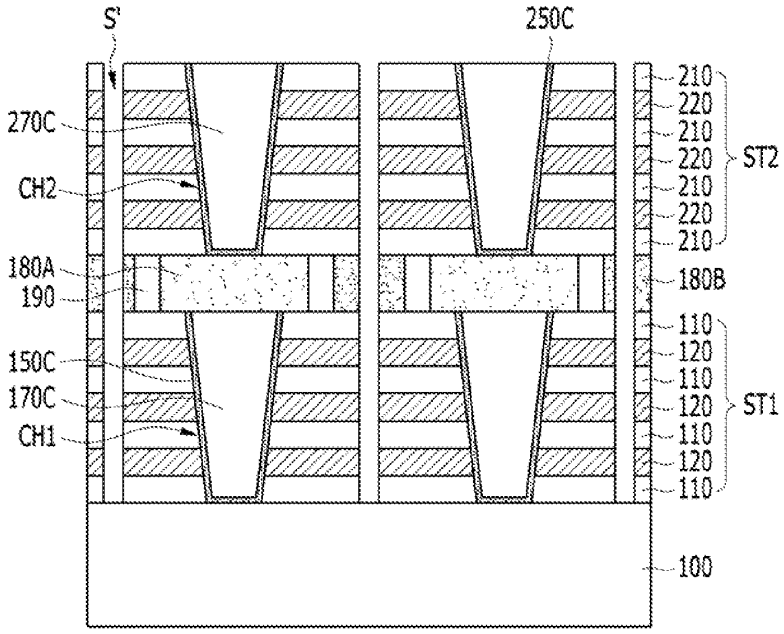
S'
250C
270C
CH2
180A
190
150C
170C
CH1
210
220
210
220
210
220
210
ST2
180B
110
120
110
120
110
120
110
ST1
100

FIG. 5C

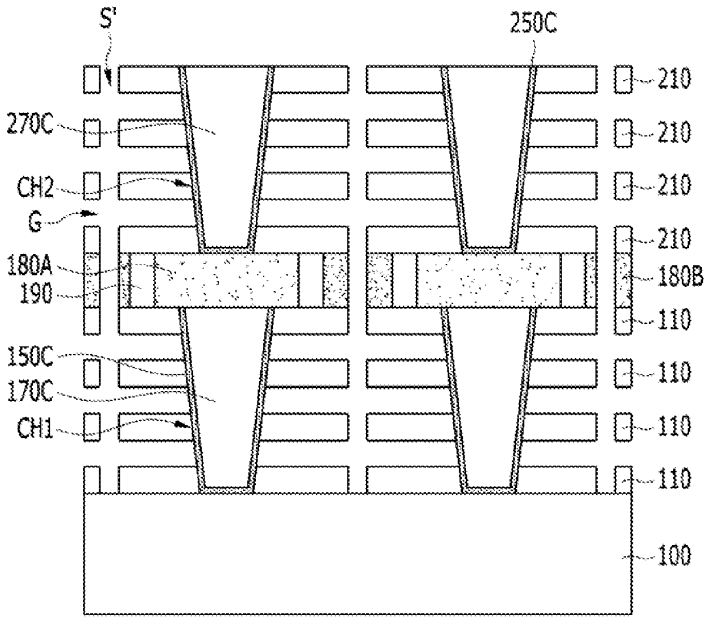
S'
250C
210
270C
210
CH2
210
G
210
180A
180B
190
110
150C
110
170C
CH1
110
110
100

FIG. 5D

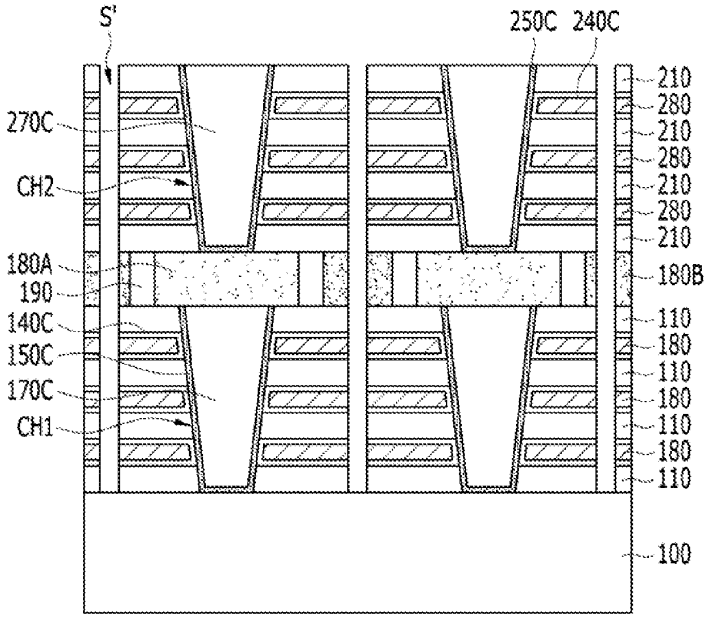
S'
250C
240C
210
280
270C
210
280
CH2
210
280
210
180A
180B
190
110
140C
180
150C
110
170C
180
CH1
110
180
110

FIG. 6A

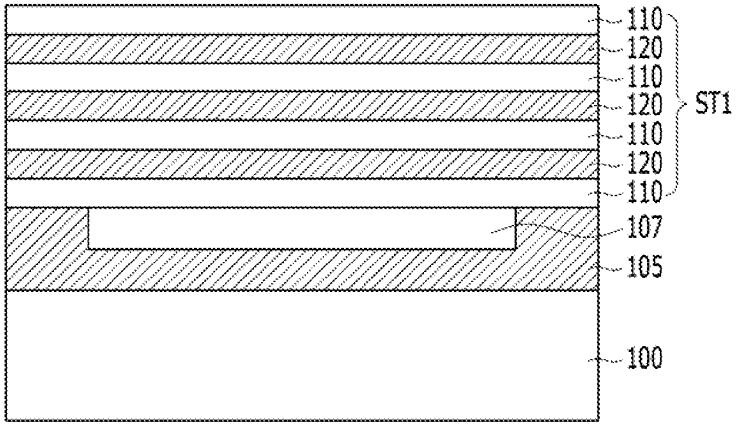
110
120
110
120
110
120
110
ST1
107
105
100

FIG. 6B

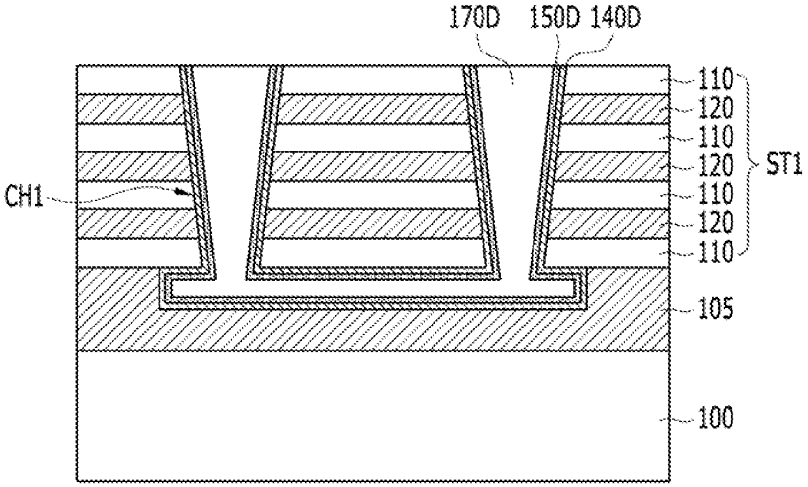
170D
150D
140D
110
120
110
120
110
120
110
ST1
CH1
105
100

FIG. 7A

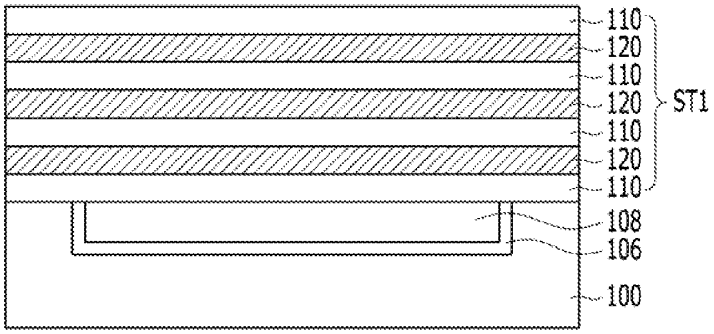
110
120
110
120
110
120
110
ST1
108
106
100

FIG. 7B

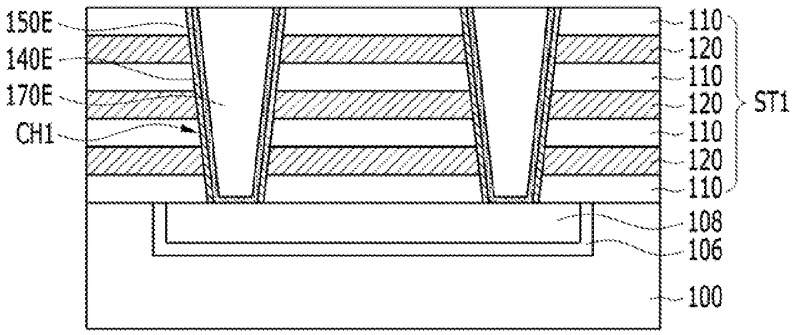
150E
140E
170E
CH1
110
120
110
120
110
120
110
ST1
108
106
100

FIG. 8

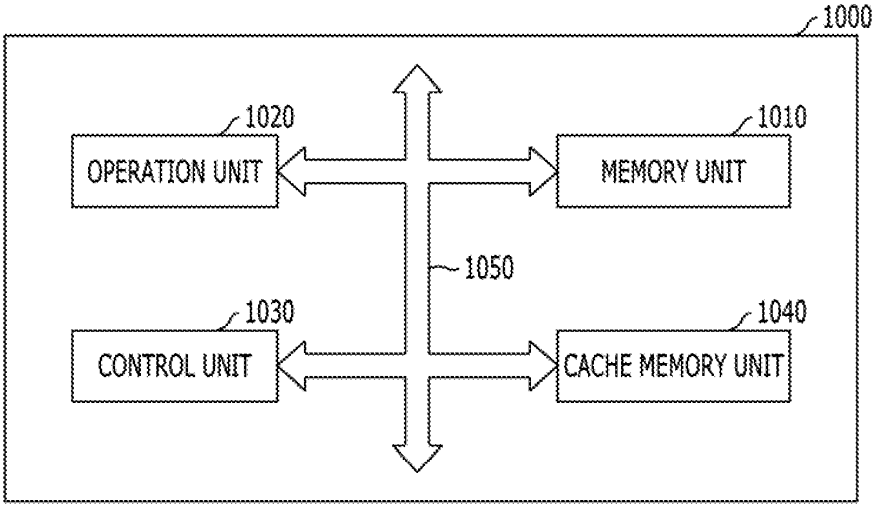
1000
1020
OPERATION UNIT
1010
MEMORY UNIT
1050
1030
CONTROL UNIT
1040
CACHE MEMORY UNIT

FIG. 9

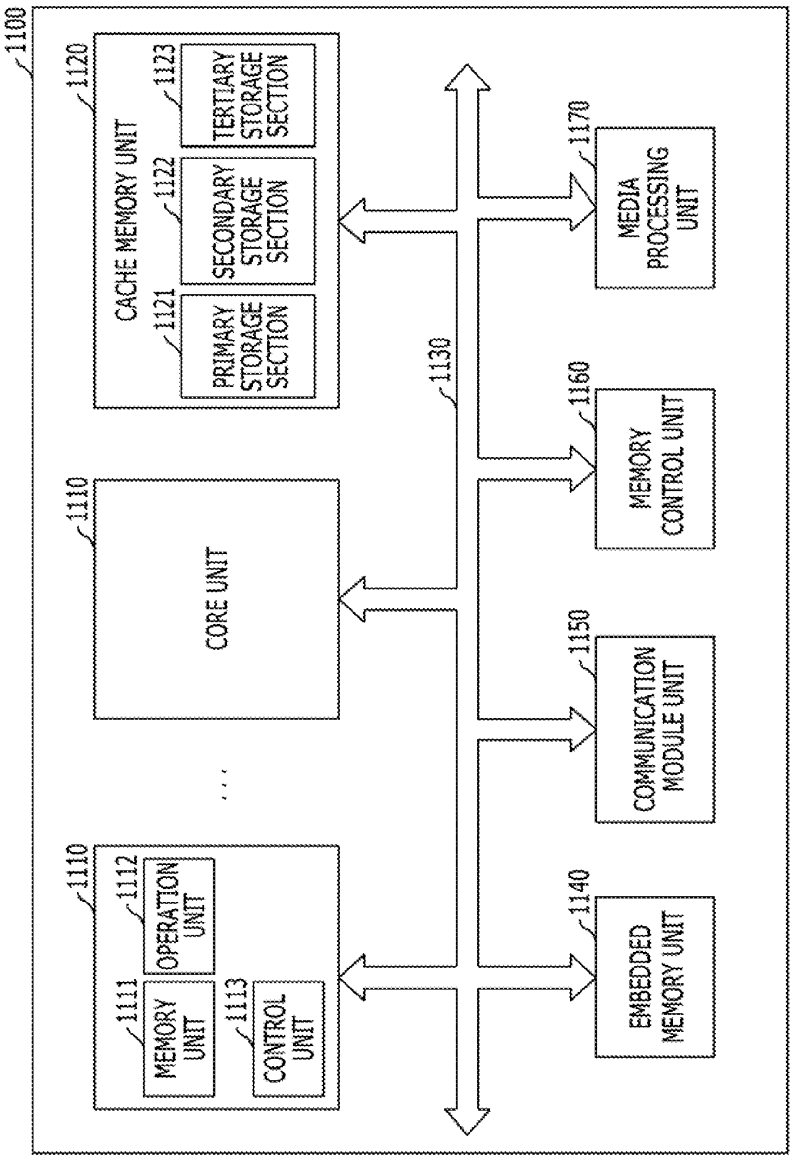
1100
1120
CACHE MEMORY UNIT
1121
PRIMARY STORAGE SECTION
1122
SECONDARY STORAGE SECTION
1123
TERTIARY STORAGE SECTION
1110
CORE UNIT
1110
1111
MEMORY UNIT
1112
OPERATION UNIT
1113
CONTROL UNIT
1130
1140
EMBEDDED MEMORY UNIT
1150
COMMUNICATION MODULE UNIT
1160
MEMORY CONTROL UNIT
1170
MEDIA PROCESSING UNIT

FIG. 10

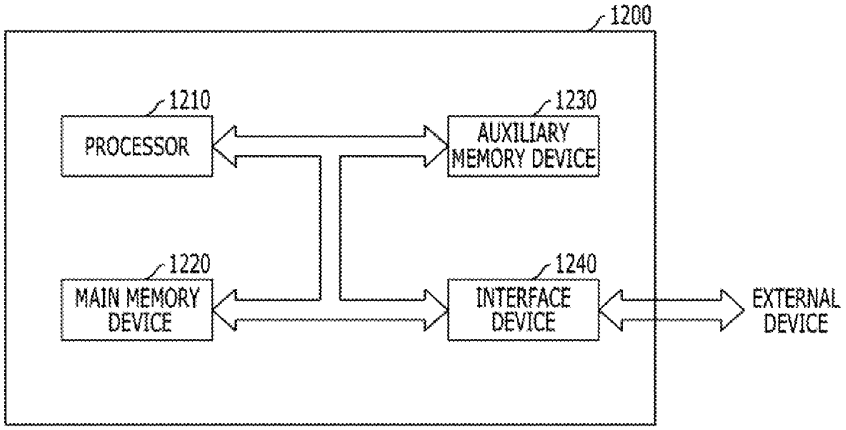
1200
1210
PROCESSOR
1230
AUXILIARY MEMORY DEVICE
1220
MAIN MEMORY DEVICE
1240
INTERFACE DEVICE
EXTERNAL DEVICE

FIG. 11

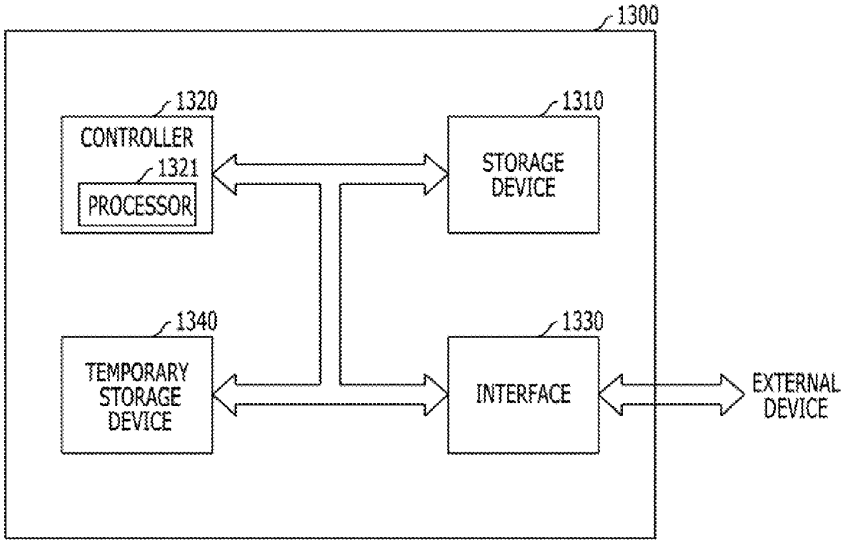
1300
1320
CONTROLLER
1321
PROCESSOR
1310
STORAGE DEVICE
1340
TEMPORARY STORAGE DEVICE
1330
INTERFACE
EXTERNAL DEVICE

FIG. 12

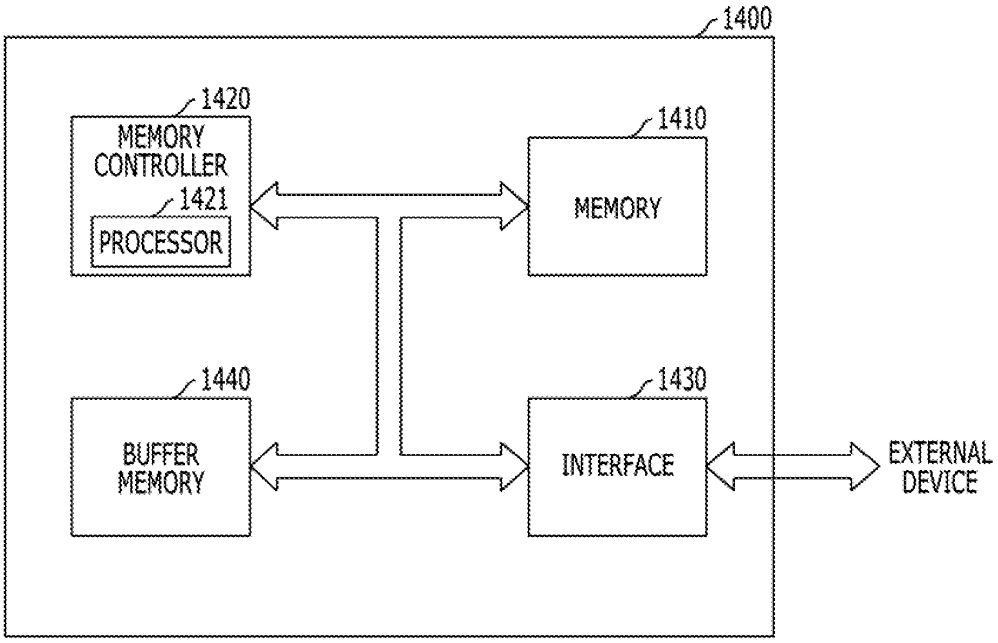
1400
1420
MEMORY CONTROLLER
1421
PROCESSOR
1410
MEMORY
1440
BUFFER MEMORY
1430
INTERFACE
EXTERNAL DEVICE

ELECTRONIC DEVICE AND METHOD FOR FABRICATING THE SAME

CROSS-REFERENCE TO RELATED APPLICATIONS

[0001] The present application claims priority to Korean Patent Application No. 10-2015-0168595, filed on Nov. 30, 2015 which is herein incorporated by reference in its entirety.

BACKGROUND

[0002] 1. Field

[0003] This patent document relates to a semiconductor device and more particularly, to an electronic device including a plurality of memory cells which are vertically stacked over a substrate, and a method for fabricating the same.

[0004] 2. Description of the Related Art

[0005] A NAND-type has h memory and the like have been developed as a semiconductor device which can store data and maintain the stored data even though a power supply is cut off.

[0006] Recently a method for improving an integration density of a 2D memory device in which memory cells are formed as a single layer over a silicon substrate has reached its limit. Thus, variety of 3D nonvolatile memory devices have been proposed including a plurality of memory cells which are vertically stacked over a silicon substrate

SUMMARY

[0007] Various embodiments are directed to an electronic device which is capable of reducing the difficulty level of the process and securing memory cell characteristics and operation characteristics, and a method for fabricating the same.

[0008] In an embodiment, there is provided an electronic device including a semiconductor memory. The semiconductor memory may include: a first channel layer formed over a substrate and extending in a vertical direction; a first stacked d structure comprising a plurality of first interlayer dielectric layers and a plurality of first gate electrode layers which are alternately stacked along the first channel layer; a first memory layer interposed between the first channel layer and the first gate electrode layers; a second channel layer formed over the first channel layer and extending in the vertical direction; a second stacked structure comprising a plurality of second interlayer dielectric layers and a plurality of second gate electrode layers which h are alternately stacked along the second channel layer; a second memory layer interposed between the second channel layer and the second gate electrode layers; a first channel connection pattern formed between the first channel layer and the second channel layer and coupling the first and the second channel layers to each other; and a first etch stop pattern formed between the first and second stack ed structures and at substantially the same level as the first channel connection pattern, wherein the first etch stop pattern includes the same material as the first channel connection pattern and is isolated from the first channel connection pattern

[0009] Implementations of the above semiconductor device may include one or more the following.

[0010] The semiconductor memory further comprises: an insulating material provided between the first channel connection pattern and the first etch stop pattern. The first channel connection pattern has a width greater than a top surface of the first channel layer and a bottom surface of the second channel layer. The semiconductor memory further comprises: a first slit passing through the first stacked structure, the first etch stop pattern, and the second stacked structure. The first etch stop pattern has a width greater than the first slit. The semiconductor memory further comprises: a third channel layer passing through the, first stacked structure, wherein the first and the third channel layers are arranged in parallel to each other and at substantially the sa me level t a fourth channel layer passing through the second stacked structure, wherein the second and t he fourth channel layers are arranged in parallel to each other and at substantially the same level; and a second channel connection pattern formed between the third channel layer and the fourth channel layer and coupling the third and fourth channel layers to each other, and wherein each of the first and the second channel connection patterns has an island shape The semiconductor memory further comprises: a second etch stop pattern formed between the first and second stacked structures and at substantially the same level as the first etch stop pattern, and a second sift passing through the first stacked structure, the second etch stop pattern, and the second stacked structure. The semiconductor memory further comprises: a second slit passing through the firs t stacked structure, the first etch stop pattern, and the second stacked structure. Each of the first channel connection pattern and the first, etch stop pattern comprise a conductive material. The semiconductor memory further comprises: a first epitaxial layer, wherein the first channel layer has a tube shape with a hollow center, wherein the first memory layer surrounds an outer sidewall and a bottom surface of the first channel layer, and wherein the first epitaxial layer extends from the substrate to the hollow center of the first channel layer to connect the substrate and the first channel layer to each other. The semiconductor memory further comprises: a second epitaxial layer, wherein the second channel layer has a tube shape with a hollow center, wherein the second memory layer surrounds an outer sidewall and a bottom surface of the second channel layer, and wherein the second epitaxial layer extends from the substrate to the hollow center of the second channel layer to connect the substrate and the second channel layer to each other. The first channel layer is in direct contact with the substrate. The second channel layer is in direct contact with the first channel connection pattern. The first memory layer further extends between the first interlayer dielectric layer and the first gate electrode layer. The second memory layer further extends between the second interlayer dielectric layer and the second gate electrode layer. The semiconductor memory further comprises: a third channel layer and a connection member, wherein the third channel layer passes through the first stacked structure and is arranged in parallel to the first channel layer at substantially the same level, and wherein the connection member is formed in the substrate and coupled to bottoms of the first and the third channel layers The semiconductor memory further comprises: an additional gate electrode layer and an insulating layer, wherein the additional gate electrode layer is formed in the substrate, wherein the connection member is formed of the same material as the first channel layer and formed in the additional gate electrode layer and wherein the insulating layer is positioned between the additional gate electrode and the substrate. The connection member includes conductive material.

[0011] The electronic device may further include a microprocessor which includes: a control unit configured to receive a signal including command from an outside the microprocessor, and performs extracting decoding of the command, or controlling input or output of a signal of the microprocessor; an operation unit configured to perform an operation based on a result that the control unit decodes the command; and a memory unit configured to store data for performing the operation, data corresponding to a result of performing the operation, or an address of data for which the operation is performed, wherein the semiconductor memory is part of the memory unit in the microprocessor.

[0012] The electronic device may further include a processor which includes: core unit configured to perform, based on a command inputted from an outside of the processor, an operation corresponding to the command, by using data a cache memory unit configured to store data for performing the operation, data corresponding to a result of performing the operation or an address of data for which the operation is performed; and a bus interface connected between the core unit and the cache memory unit, and configured to transmit data between the core unit and the cache memory wherein the semiconductor memory is part of the cache memory unit in the processor.

[0013] The electronic device may further include a processing system which includes a processor configured to decode a command received by the processor and control an operation for information based on a result of decoding the command; an auxiliary memory device configured to store a program for decoding the command and the information; a main memory device configured to call and store the program and the information from the auxiliary memory device such that the processor can perform the operation using the program and the information when executing the program; and an interface device configured to perform communication between at east one, of the processor, the auxiliary memory device and the main memory device and the outside, wherein the semiconductor memory is part of the auxiliary memory device or the main memory device in the processing system.

[0014] The electronic device may further include a data storage system which includes: a storage device configured to store data and conserve, stored data regardless of power supply; a controller configured to control input and output of data to and from the storage device according to a command inputted form an outside; a temporary storage device configured to temporarily store data exchanged between the storage device and the outside; and an interface configured to perform, communication between at least one of the storage device, the controller and the temporary storage device and the outside, wherein the semiconductor memory is part of the storage device or the temporary storage device in the data storage system.

[0015] The electronic device may further include a memory system which includes: a memory configured to store data and conserve stored data regardless of power supply; a memory controller configured to control input and output of data to and from the memory according to a command inputted form an outside; a buffer memory configured to buffer data exchanged between the memory and the outside; and an interface configured to perform communication between at least one of the memory, the memory controller and the buffer memory and the outside, wherein the semiconductor memory is part of the memory or the buffer memory in the memory system.

[0016] In an embodiment, a method for fabricating an electronic device including a semiconductor memory may include: forming a first stacked structure over a substrate the first stacked structure including a plurality of first interlayer dielectric layers and first material layers which are alternately stacked over each other; forming a first channel hole by selectively etching the first stacked structure; forming a first channel layer in the first channel ho e; forming a channel connection, pattern and an etch stop pattern over the first stacked structure, wherein the channel connection pattern overlaps the first channel hole and wherein the etch stop pattern is formed of the same material as the channel connection pattern, is isolated from the channel connection pattern, and is formed at substantially the same level as the channel connection pattern; forming a second stacked structure over the channel connection pattern and the etch stop pattern, the second stacked structure including a plurality of second interlayer dielectric layers and second material layers which are alternately stacked over each other; forming a second channel hole to expose t he channel connection pattern by selectively etching the second stacked structure; forming a second channel layer in the second channel hole; forming an initial slit by etching the second stacked structure to expose the etch stop pattern; and forming a final slit by etching the exposed etch stop pattern and the first stacked structure located under the exposed etch stop pattern.

[0017] Implementations of the above method may include one or more the following.

[0018] The method further comprising: providing an insulating material between the channel connection pattern and t he etch stop pattern. The channel connection pattern has a larger width than a top surface of the first channel hole and a bottom surface of the second channel hole. The etch stop pattern has a width greater than the slit. The forming of the first channel layer comprises: forming a memory teat a channel material in the first channel hole; and etching the memory material and the channel material through a blanket etch process until a bottom surface of the first channel hole is exposed. The forming of the second channel layer comprises: forming a memory material and a channel material in the second channel hole; and etching the memory material and the channel material through a blanket etch process until a bottom surface of the second channel hole is exposed. The method further comprising: forming an epitaxial layer over the bottom surface of the first channel hole after the etching of the memory material and the channel material. The method further comprising: forming, an epitaxial layer over the bottom surface of the second channel hole after the etching of the memory material and the channel material. The method further comprising: forming a first memory layer over a sidewall of the first channel hole, wherein the first channel layer is formed over the first memory layer. The method further comprising: forming a second memory layer over a sidewall of the second channel hole, wherein the second channel layer is formed over the second memory layer. The method further comprising: after the forming of the final slit, removing the first and the second material layers exposed through the final slit to form first spaces and second spaces, respectively and filling first and second conductive materials in the first and the second spaces, respectively. The method further comprising: forming a first memory layer along inner walls of the first spaces; and

forming a second memory layer along inner walls of the second spaces, wherein the first conductive material is formed over the first memory layer, and wherein the second conductive material is formed over the second memory layer. The method further comprising: forming a gate electrode layer in the substrate, forming a sacrificial layer in the gate electrode layer so that the gate electrode layer surrounds a sidewall and a bottom surface of the sacrificial layer; forming a third channel hole by selectively etching the first stacked structure, wherein the third channel layer is arranged in parallel to the first channel hole and at substantially the same level, wherein the first and the third channel holes expose the sacrificial layer; removing the sacrificial layer through the first and the third channel holes to form a trench in the gate electrode layer; and forming a memory layer over inner surfaces of the first channel hole, the third channel hole, and the trench. The method further comprising: forming a conductive layer in the substrate; and forming a third channel hole by selectively etching the first stacked structure, wherein the third channel layer is arranged in parallel to the first channel hole and at substantially the same level, and wherein the first and the third channel holes expose the conductive layer.

[0019] These and other aspects, implementations and associated advantages are described in greater detail in the drawings, the description and the claims.

BRIEF DESCRIPTION OF THE DRAWINGS

[0020] FIGS. **1**A to **1**D are cross-sectional views for describing a method for fabricating a semiconductor device in accordance with a comparative example and problems thereof.

[0021] FIGS. **2**A to **2**F are cross-sectional views illustrating semiconductor device and a method for fabricating the same in accordance with an embodiment.

[0022] FIG. **3**A is a plane view of a channel connection pattern and n etch stop pattern according to an embodiment.

[0023] FIG. **3**B is a plane view of a channel connection pattern and an etch stop pattern according to an embodiment.

[0024] FIGS. **4**A to **4**D are cross-sectional views illustrating a semiconductor device and method for fabricating the same in accordance with another embodiment.

[0025] FIGS. **5**A to **5**D are cross-sectional views illustrating semiconductor device and a method for fabricating the same in accordance with another embodiment.

[0026] FIGS. **6**A and **6**B are cross-sectional views illustrating semiconductor device and a method for fabricating the same in accordance with another embodiment.

[0027] FIGS. **7**A and **7**B are cross-sectional views illustrating semiconductor device and a method for fabricating the same in accordance with another embodiment.

[0028] FIG. **8** is an example of configuration diagram of a microprocessor implementing memory circuitry based on the disclosed technology.

[0029] FIG. **9** is an example of configuration diagram of a processor implementing memory circuitry based on the disclosed technology.

[0030] FIG. **10** is an example of configuration diagram of a system implementing memory circuitry based on the disclosed technology.

[0031] FIG. **11** is an example of configuration diagram of a data storage system implementing memory circuitry based on the disclosed technology.

[0032] FIG. **12** is an example of configuration diagram of a memory system implementing memory circuitry based on the disclosed technology.

DETAILED DESCRIPTION

[0033] Various embodiments will be described below in more detail with reference to the accompanying drawings. The present invention may, however, be embodied in different forms and should not be construed as limited to the embodiments set forth herein. Rather, these embodiments are provided so, that this disclosure will be thorough and complete and will fully convey the scope of the present invention to those skilled in the art. Throughout the disclosure, like reference numerals refer to like parts throughout the various figures and embodiments of the p resent invention.

[0034] Before embodiments of the present invention are described, problems which may occur during a fabrication process for a semiconductor device in accordance with a comparative example will be described as follows.

[0035] FIGS. **1**A to **1**D are cross-sectional views for describing a method for fabricating a semiconductor device in accordance with a comparative example and associated problems thereof.

[0036] Referring to FIG. **1**A, a first stacked structure ST**1** may be formed over a substrate **10** having a predetermined lower structure illustrated), the first stacked structure ST**1** including a plurality of first. interlayer dielectric layers **11** and first sacrificial layer **12** which are alternately stacked.

[0037] Then, the first stacked structure ST**1** may be selectively etched to form a channel hole CH**1** which exposes a part of the substrate **10**, and a pillar-shaped sacrificial pattern **13** may be buried in the first channel hole CH**1**.

[0038] Referring to FIG. **1**B, a second stacked structure ST**2** may be formed over the resultant structure of FIG. **1**A, the second stacked structure ST**2** including a plurality of second interlayer dielectric layers **21** and second sacrificial layers **22** which are alternately stacked. The second interlayer dielectric layer **21** and the second sacrificial layer **22** may be formed of the same materials as the first interlayer dielectric layer **11** and the first sacrificial layer **12**, respectively.

[0039] Then, the second stacked structure ST**2** may be selectively etched to form a second channel hole C H**2** which exposes he top surface of the sacrificial pattern **13**.

[0040] Referring to FIG. **1**C, the sacrificial pattern **13** may be removed to form a channel hole CH**1** and CH**2**. The first and second channel holes CH**1** and CH**2** are connected to each other.

[0041] Then, a memory layer **14** and a channel layer **15** may be formed along the entire surface of the resultant structure having the channel hole CH**1** and CH**2**.

[0042] Referring to FIG. **1**D, a blanket etch process (refer to downward arrows) may be performed on the memory layer **14** and the channel layer **15** to expose the substrate **10** at the bottom surface of the channel hole CH**1** and CH**2**. When the bottom surface of the channel hole CH**1** and CH**2** is covered by the memory layer **14**, it is impossible to connect the substrate **10** and the channel layer **15**. Thus, the substrate to **10** at the bottom surface of the channel hole CH**1** and CH**2** needs to be exposed. During the present process the memory layer **14** and the channel layer **15** on the top surface of the second stacked structure ST**2** may also be removed. As a result, a memory layer pattern **14**A and a

channel layer pattern **15**A may be formed on the sidewalls of the channel hole CH**1** and CH**2**.

[0043] The first and second stacked structures ST**1** end ST**2** may be selectively etched to form a slit S which is positioned between t neighboring channel holes CH**1** and CH**2** while passing through the first and second stacked structures ST**1** and ST**2**. The slit S may serve as a supply path of gas or chemical for removing the first and second sacrificial layers **12** and **22**.

[0044] Then, although not illustrated, the first and second sacrificial layers **12** and **22** exposed through the slit S may be removed to form spaces, and gate electrodes may be formed by burying a conductive material in the, spaces from which the first and second sacrificial layers **12** and **22** are removed.

[0045] As a result, a semiconductor device may be completed, which, includes a plurality of memory cells stacked along the channel layer pattern **15**A extended in a direction perpendicular to an upper surface of the substrate **10**. Each of the memory cells may include one gate electrode connected to the channel layer pattern **15**A. The memory layer pattern **14**A is positioned between two neighboring gate electrodes. A plurality of memory cells formed along one channel layer pattern **15**A may be connected in series to form one memory cell string.

[0046] However, when the above-described semiconductor device is fabricated, the following problems may occur. The width of each of the first channel hole CH**1** and the second channel hole CH**2** decreases from top to bottom due to the characteristic of the dry etching process. For this reason, while the memory layer **14** and the channel layer **15** are etched through the blanket etch process in order to open the bottom surface of the channel hole CH**1** and CH**2**, the channel layer pattern **15**A positioned on the bottom sidewalls P**1** of the second channel hole CH**2** may be lost because the channel layer pattern **15**A is vulnerable to the etch process. When a part of the channel layer pattern **15**A is lost, a part of memory cells may lose their functions, and the serial connection of the memory cells may be cut off. Then, the memory cells may not operate as a memory cell string.

[0047] Furthermore, while the first channel hole CH**1** and the second channel hole CH**2** are formed through separate mask and etch processes, the slit S may be formed through one mask and etch process. The slit S has a smaller width than the first channel hole CH**1** and, the second channel hole CH**2**. Thus, when the slit within the first stacked structure ST**1** and the slit within the second stacked structure ST**2** are formed through separate processes like the first channel hole CH**1** and the second channel hole CH**2** it is difficult to align the slit within the first stacked structure ST**1** and the slit: within the second stacked structure ST**2** to each other. Thus, an overlap margin is low and a manufacturing process is likely to fall. In addition, depending on regions, the slits S may be formed to different depths. For example, one slit S may penetrate both of the first and second stacked structures ST**1** and ST**2** (refer to P**2**), and another slit S may be formed only the second stacked structure ST**2** and does not, penetrate a part first stacked structure ST**1**. (refer to P**3**). That is, it is difficult to maintain the depths of the slits S uniformly.

[0048] The present embodiment ad dresses the above-described problems, reduces the level of difficulty of the process, and secures memory cell characteristics and operation characteristics. FIGS. **2**A to **2**F are cross-sectional views illustrating a semiconductor device and a method for fabricating the same in accordance with an embodiment. First, the fabrication method will be described.

[0049] Referring to FIG. **2**A, a substrate **100** may be prepared. The, substrate **100** may include a semiconductor material. Although not, illustrated, the substrate **100** may include a lower structure (not illustrated) for example, an impurity region to be connected to a channel layer.

[0050] Then, a first stacked structure ST**1** may be formed over the substrate **100**, the first stacked structure ST**1** including a plurality of first interlayer dielectric layers **110** and first material layers **120** which are alternately stacked. The first material layer **120** may include a sacrificial layer which will be replaced with a gate electrode of a memory cell during a subsequent process or a conductive layer which functions as a gate electrode of a memory cell.

[0051] When the first material layer **120** is a sacrificial layer, the first material layer **120** may be formed of a material having a different etch rate from the first interlayer dielectric layer **110**. This prevents a loss of the first interlayer dielectric layer **110** during a subsequent process for removing the first material layer **120**. For example when the first interlayer dielectric layer **110** is formed of silicon oxide, the first material layer **120** may be formed of silicon nitride or amorphous carbon. When the first material layer **120** is a conductive layer, the first material layer **120** may be formed of various conductive materials such as metal, metal nitride polysilicon doped with an impurity, and a combination thereof.

[0052] The first, interlayer dielectric layer **110** may serve to insulate the gate electrodes of memory cells adjacent to each other in the vertical direct on, and include various insulating materials such as silicon oxide, silicon nitride, silicon oxynitride, and a combination thereof.

[0053] The first stacked structure ST**1** may be selectively etched to form a first channel hole CH**1** which exposes a part of the substrate **100**. Then, a first memory layer **140** and a first channel layer **150** may be formed along the entire surface of the resultant structure having the first channel hole CH**1**.

[0054] Referring to a dotted circle in FIG. **2**A, which illustrates a part of the first memory layer **140**, the first memory layer **140** may include a first tunnel insulating layer **142**, a first charge storage layer **144**, and a first charge blocking layer **146** which are sequentially arranged over the first channel layer **150**. The first tunnel insulating layer **142** may allow tunneling of a charge and include silicon oxide. The first charge storage layer **144** may store charges and include silicon nitride or polysilicon. The first charge blocking layer **146** may serve to block migration of charges and may include silicon oxide. The first channel layer **150** may be formed of various semiconductor materials such as polysilicon.

[0055] Referring to FIG. **2**B, a blanket etch process may be performed on the first memory layer **140** and the first channel layer **150** to expose the substrate at the bottom surface of the first channel hole CH**1**. During the blanket etch process, the first memory layer **140** and the first channel layer **150** on the top surface of the first stacked structure ST**1** may be removed. As a result, a first memory layer pattern **140**A and a first channel layer pattern **150**A may be formed on the sidewalls of the first channel hole CH**1**. The lowermost part of the first memory layer pattern **140**A may slightly protrude toward the center of the first channel hole

CH**1** and is in direct contact with the sidewalls of the first channel hole CH**1**. The first channel layer pattern **150**A may be positioned on the protruding lowermost part of the first memory layer pattern **140**A and is in direct contact with the sidewalls of the first memory layer pattern **140**A. That is, the first channel layer pattern **150**A may not be in direct contact with the substrate **100**.

[0056] Subsequently, an epitaxial growth process may be performed to form a first epitaxial layer **160** over the substrate **100** at the bottom surface of the first channel hole CH**1**. The first epitaxial layer **160** for connecting the first channel layer pattern **150**A to the substrate **100** may be grown to a level equal to or higher than the bottom surface of the first channel layer pattern **150**A.

[0057] Then, an insulating material nay be deposited on the resultant structure having the first epitaxial layer **160**. The insulating material may be deposited to such a thickness so as to sufficiently first channel hole CH**1**. Then, a planarization process is performed against the insulating material until the top surface of the first stacked structure ST**1** is exposed. As a result, a first insulating pattern **170** is formed in the first channel hole CH**1** and over the first epitaxial layer **160**,

[0058] Referring to FIG. **2**C a channel connection pattern **180**A and an etch stop pattern **180**B may be formed over the resultant structure of FIG. **28**. At this time, the channel connection pattern **180**A may be formed to overlap the first channel hole CH**1** and the etch stop pattern **180**B may be formed to overlap the region in which a slit is formed. The channel connection pattern **180**A and the etch stop pattern **180**B may be isolated from each other by a predetermined distance, and an insulating material **190** may be provided between the channel connection pattern **180**A and the etch stop pattern **180**B.

[0059] As long as the channel connection patterns **180**A overlap the plurality of first c harm& holes CH**1** and the etch stop patterns **180**B overlap a plurality of slits, respectively, the shapes of the channel connection pattern **180**A and the etch stop pattern **180**B may be modified in various manners. The plane shapes of the channel connection pattern **180**A and the etch stop pattern **180**B are illustrated in FIGS. **3**A and **3**B.

[0060] FIG. **3**A is a plane view of the channel connection pattern and the etch stop pattern, and FIG. **2**C is a cross-sectional view taken along the line A-A' of FIG. **3**A.

[0061] Referring to FIG. **3**A the channel connection pattern **180**A may have an island shape which overlaps the first channel holes CH**1**. order to secure an overlap margin between the channel connection pattern **180**A and the first channel hole CH**1**, the channel connection pattern **180**A may have a larger width than the top surface of the first channel hole CH**1**. The etch stop pattern **180**B may be formed to cover the rest region in which the channel connection pattern **180**A is not formed while being isolated by a predetermined distance from the channel connection pattern **180**A. Since each of the slits will be positioned between two first channel holes CH**1** adjacent to each other in a first direction parallel to line A-A and extended in a second direction perpendicular to line A-A', the etch stop pattern **180**B may overlap all of the slits which will be formed later.

[0062] FIG. **3**B is a plane view of the channel connection pattern and he etch stop pattern according to another embodiment, and FIG. **2**C s a cross-sectional view taken along the line B-B' of FIG. **3**B.

[0063] Referring to FIG. **3**B, the channel connection pattern **180**A may have an island shape which overlaps each of the first channel holes CH**1**. The etch stop pattern **180**B may overlap slits which will be positioned between two first channel holes CH**1** adjacent to each other in a first direction parallel to line B-B' and extended in a second direction perpendicular to line B-B'. That is, the etch stop pattern **180**B may have a line shape extended in the second direction. In order to secure, an overlap margin between a slit and the etch stop pattern **180**B, the width of the etch stop pattern **180**B measured in the line B-B' may be larger than the width of the slit measured in the line B-B'.

[0064] Referring back to FIG. **2**C, the channel connection pattern **180**A and the etch stop pattern **180**B ray be formed through a series of processes of depositing a conductive material such as a metal-containing material or semiconductor material doped with an impurity over the resultant structure of FIG. **2**B and then selectively etching the conductive material. That is, the channel connection pattern **180**A and the etch stop pattern **180**B may be formed of the, same material and at the same level in the vertical, direction. The insulating material **190** may be formed through a series of processes of depositing an insulating material to cover the resultant structure in which the channel connection pattern **180**A and the etch stop pattern **180**B are formed, and then performing a planarization process until the top surfaces of the channel connection pattern **180**A and the etch stop pattern **180**B are exposed.

[0065] Referring to FIG. **2**D, a second stacked structure ST**2** may be formed over the resultant structure of FIG. **2**C, the second stacked structure ST**2** including a plurality of second interlayer dielectric layers **210** and second material layers **220** which are alternately stacked. The second interlayer dielectric layer **210** and the second material layer **220** may be formed of the same materials as the first interlayer dielectric layer **110** and the first material layer **130**,respectively.

[0066] The second stacked structure ST**2** may be, selectively etched to form a plurality of second channel holes CH**2** which expose respective channel connection patterns **180**A through the second stacked structure ST**2**. In order to secure an overlap; margin, the bottom surface of the second channel hole CH**2** may have a mailer width than the channel connection pattern **180**A.

[0067] Then, a second memory layer pattern **240**A and a second channel layer pattern **250**A may be formed on the sidewalls of the second channel hole CH**2**, and an epitaxial growth process m ay be performed to form a second epitaxial layer **260** over the channel connection pattern **180**A exposed at the bottom surface of the second channel hole CH**2**. The second epitaxial layer **260** may connect the channel connection pattern **180**A and the second channel layer pattern **250**A to each other, The rest space of the second channel hole CH**2** may be filled with a second insulating pattern **270**.

[0068] Referring to FIGS. **2**E and **2**F, a slit S may be formed through the second stacked structure ST**2** the etch stop pattern **180**B, and the first tacked structure ST**1**. The slit S' may be positioned between two second channel holes CH**2** adjacent to each other in the first direction and between two first channel holes CH**1** adjacent to each other in the first direction. The slit S' may extend in the second direction. The formation process for the slit S' may be two steps.

[0069] First as illustrated in FIG. **2**E, a mask pattern (not illustrated) may be formed over the second stacked structure ST**2** so as to expose a region in which the slit S will be formed, and the second stacked structure ST**2** may be etched using the mask pattern as an etch barrier The etch process is stopped at the etch stop pattern **180**B to form an initial slit S. That is, the etch process may be performed until the etch stop patterns **180**B are exposed.

[0070] Then, as illustrated in FIG. **2**F, the structure under the initial slit S, that is, the etch stop pattern **180**B and the first stacked structure ST**1** may be additionally etched to complete the slit S'.

[0071] When the first and second material layers **120** and **220** are sacrificial layers, an additional process (not illustrated) may be further performed. The additional process may include removing the first and second material layers **120** and **220** exposed through the slit S' to form spaces and forming a gate electrode layer by burying a conductive material in each of the spaces from which the first and second material layers were removed. When the first and second material layers **120** and **220** are conductive layers, the additional process may not be performed.

[0072] Although not illustrated, a conductive material may be deposited over the second stacked structure ST**2** and patterned to form a conductive line which extends in the second direction parallel to the slit S'. The conductive line may contact the second channel layer pattern **250**A. When the bottom of the first channel layer pattern **150**A is connected to a source region formed in the substrate **100**, the conductive line may function as a bit line.

[0073] Through the above-described process, the semiconductor device illustrated in FIG. **2**F may be fabricated. Referring back to FIG. **2**F the semiconductor device in accordance with the present embodiment may include the first stacked structure ST**1**, the second stacked structure ST**2**, the channel connection pattern **180**A, and the etch stop pattern **180**B. The first stacked structure ST**1** may include the first channel layer pattern **150**A, the first epitaxial layer **160**, the first memory layer pattern **140**A, the first interlayer dielectric layers **110** and the first material layers **120** and the first memory layer pattern **140**A. The first channel layer pattern **150**A extends in the vertical direction over the substrate **100** and has a pillar shape with a hollow center. The first epitaxial layer **160** is formed in the hollow center and at the bottom of the first channel layer pattern **150**A so as to connect the substrate **100** and the first channel layer pattern **150**A. The first memory layer pattern **140**A surrounds an outer sidewall and a bottom surface of the first channel layer pattern **150**A. The first interlayer dielectric layers **110** and the first material layers **120** are alternately stacked along the first channel layer pattern **150**A. The first memory layer pattern **140**A is provided between the first material layers **120** and the first channel layer pattern **150**A.

[0074] The second stacked structure ST**2** may include the second channel layer pattern **250**A, second epitaxial layer **260**, the second memory layer pattern **240**A, and the second interlayer dielectric layers **210** and the second material layers **220**. The second channel layer pattern **250**A extends in the vertical direction and over the first stacked structure ST**1** and has a pillar shape with a hollow center. The second epitaxial layer **260** is formed in the empty space at the bottom of the second channel layer pattern **250**A to connect the second epitaxial layer **260** and the second channel layer pattern **250**A. The second memory layer pattern **240**A surrounds an outer sidewall and a bottom surface of the second channel layer pattern **250**A. The second interlayer dielectric layers **210** and the second material layers **220** are alternately stacked along the second channel layer pattern **250**A with the second memory layer pattern **240**A provided therebetween.

[0075] The channel connection pattern **180**A may connect the first and second channel layer patterns **150**A and **250**A and is located between the first and second stacked structures ST**1** and ST**2**. The etch stop pattern **180**B may overlap the region in which a slit of the first and second stacked structures ST**1** and ST**2** is formed. The slit may be formed through the first stacked structure ST**1**, the stop etch pattern **180**B, and the second stacked structure ST**2**.

[0076] One first channel layer pattern **150**A one first material layer **120** (or gate electrode layer) surrounding the first channel layer pattern **150**A, and the first memory layer pattern **140**A interposed therebetween may form one memory cell. Similarly, one second channel layer pattern **250**A, one second material layer **220** (or gate electrode layer) surrounding the second channel layer pattern **250**A, and the second memory layer pattern **240**A interposed therebetween may form one memory cell.

[0077] According to a voltage applied to the first and second material layers **120** and **220** (or gate electrode layer), charges may be introduced into the charge storage layer **144** from the first and second channel layer patterns **150**A and **250**A or charges of the charge storage layer **144** may be discharged to the first and second channel layer patterns **150**A and **250**A. Thus, the memory cells may store different data from each other.

[0078] The above-described semiconductor device and the method for fabricating the same can acquire the following advantages. First, since the first channel layer pattern **150**A and the second channel layer pattern **250**A are formed through separate processes and connected to each other through the channel connection pattern **180**A, the first and, second channel layer patterns **150**A and **250**A may not be etch damaged, unlike the comparative example.

[0079] Furthermore, when the slit S is formed an overlap margin can be secured through one mask process, and the depths of the slit S may be maintained uniformly in the entire regions through the etch stop pattern **180**B. Furthermore, since the channel connection pattern **180**A and the, etch stop pattern **180**B are formed through a single process, the above-described advantages can be secured without increasing the difficulty level of the process.

[0080] The semiconductor device and the method for fabricating the same in accordance with the above-described embodiment may be modified in various manners. For example, the first epitaxial layer **160** may be omitted as long as the first channel layer pattern **150**A is in direct contact with the substrate **100**. Furthermore, the second epitaxial layer **260** may be omitted as long as the second channel layer pattern **250**A is in direct contact with the channel connection pattern **180**A. This structure will be described below with reference to FIGS. **4**A to **4**D.

[0081] Furthermore, the first memory layer pattern **140**A may be modified in various manners as long as the first memory layer pattern **140**A is interposed between the first channel layer pattern **150**A and the first material layer **120**. Similarly, the second memory layer pattern **240**A may be modified in various manners as long as the second, memory layer pattern **240**A is interposed between the second channel

layer pattern **250**A and the second material layer **220**. This structure will be described below with reference to FIGS. **5**A to **5**C.

[0082] In the above-described embodiment, the I-shaped memory cell string has been taken as an example. The I shaped memory cell string includes memory cells stacked between a source region within the, substrate **100** and a bit line over the second stacked structure ST**2**. However the present embodiment is not limited thereto. In another embodiment, a U-shaped memory cell string may be formed, and a source line and a bit line may be coupled to both ends of a U-shaped memory cell. This structure will be described below with reference to FIGS. **6**A to **7**B.

[0083] FIGS. **4**A to **4**D are cross-sectional views illustrating semiconductor device and method for fabricating the same in accordance with another embodiment. The detailed descriptions of the same parts as those of the above-described embodiment are omitted herein.

[0084] Referring to FIG. **4**A, a first stacked structure ST**1** may be formed over a substrate **100**, the first stacked structure ST**1** including a plurality of first interlayer dielectric layers **110** and first material layers **120** which are alternately stacked, and selectively etched to form a first channel hole CH**1**. Then, a first memory layer **140** may be formed along the entire surface of the resultant structure having the first channel hole CH**1** formed.

[0085] Referring to FIG. **4**B a blanket etch process may be performed on the first memory layer **140** to expose the substrate **100** at the bottom surface of the first channel hole CH**1**. During the blanket etch process, the first memory layer **140** on the top surface of the first stacked structure ST**1** may be removed. As, a result, a first memory layer pattern **1406** may be formed on the sidewalls of the first channel hole CH**1**.

[0086] Then, a first channel layer **150** may be formed along the entire surface of the resultant structure. The first memory layer pattern **1406** is formed between the first channel layer **150** and the first stacked structure ST**1**. Since the substrate **100** at the bottom surface of the channel hole CH**1** is exposed, the first channel layer **150** may be in direct contact with the substrate **100**.

[0087] In another embodiment (not illustrated), the first channel layer **150** may have a thickness to completely fill the first channel hole CH**1** having the first memory layer pattern **140**B formed therein. In this case, a pillar-shaped channel layer pattern may be formed through a subsequent process, and the first insulating layer pattern **170**B may be omitted. Alternatively, in another embodiment (not illustrated) a blanket etch process may be additionally performed on the first channel layer **150**. In this case, the first channel layer **150** may have a hollow pillar shape similar to the first memory layer pattern **140**B, while the outer side all of the first channel layer **150** is surrounded by the first memory layer pattern **140**B.

[0088] Referring to FIG. **4**C, a first insulating pattern **170**B may be formed to fill the rest space of the first channel hole CH**1**. The first insulating pattern **170**B may be for red through a series of processes of depositing an insulating material on the resultant structure of FIG. **48** such that the insulating material has a thickness to sufficiently fill the first channel hole CH, and performing a planarization process until the top surface of the first stacked structure ST**1** is exposed. During the the first stacked structure ST**1** may be removed to form a first channel layer pattern **150**B. The first channel layer pattern **150**B may be formed along the sidewalls and bottom surface of the first channel hole CH**1** having the first memory layer pattern **140**B formed therein.

[0089] Referring to FIG. **4**D, an etch stop pattern **180**B and an etch stop pattern **180**B may be formed over the resultant structure of FIG. **4**C so as to overlap the first channel hole CH**1** and the region in which a slit is to be formed, respectively. Between the channel connection pattern **180**A and the etch stop pattern **180**B, an insulating material **190** may be provided.

[0090] Then, a second stacked structure ST**2** may be formed. In the second stacked structure ST**2**, a plurality of second interlayer dielectric layers **210** and second material layers **220** are alternately stacked. The second stacked structure ST**2** may be selectively etched to form a plurality of second channel holes CH**2** which expose the respective channel connection patterns **180**A.

[0091] Then, a second memory layer pattern **240**B may be formed the sidewalls of the second channel hole CH**2**, a second channel layer pattern **250**B may be formed along the sidewalls and bottom surface of the second channel hole CH**2** having the second memory layer pattern **240**B. The second channel layer pattern **250**B is in direct contact with the channel connection pattern **180**A, and a second insulating pattern **270**B may be formed to fill the rest space of the second channel hole CH**2** on which t he second memory layer pattern **240**B and the second channel layer pattern **250**B are formed.

[0092] Although not illustrated, the above-described subsequent processes for example, the slit formation process and the bit line formation process are performed in the same manner as described above with reference to FIGS. **2**E and **2**F.

[0093] The present embodiment may be characterized in that the first and second channel layer patterns **150**B and **250**B are formed after the first and second memory layer patterns **140**B and **240**B are subject to a blanket etch process to expose the substrate **100** at the bottom surface of the first channel hole CH**1** and/or the channel connection pattern **180**A at the bottom surface of the second channel hole CH**2**, respectively. For this reason, the epitaxial growth process of FIG. **2**B or **2**D may be omitted.

[0094] A part of the processes of FIGS. **2**A to **2**D and a part of the processes of the present embodiment may be combined. For example, in the present embodiment, the first memory layer pattern **140**A, the first channel layer pattern **150**A, and the first epitaxial layer **160** of FIG. **2**B may be formed in the first channel hole CH**1**, instead of the first memory layer pattern **140**B and the first channel layer pattern **150**B. For another example, in the present embodiment the second memory layer pattern **240**A, the second channel layer pattern **250**A and the second epitaxial layer **260** of FIG. **2**D may be formed n the second channel hole CH**2** instead of the second memory layer pattern **240**B and the second channel layer pattern **250**B.

[0095] FIGS. **5**A to **5**D are cross-sectional views illustrating a semiconductor device and a method for fabricating the same in accordance with another embodiment. The detailed descriptions of the same parts as those of the above-described embodiments are omitted herein.

[0096] Referring to FIG. **5**A, a first stacked structure ST**1** may be formed over a substrate **100** the first stacked structure ST**1** including a plurality of first interlayer dielectric

layers **110** and first material layers **120** which are alternately stacked, and selectively etched to form a first channel hole CH**1**.

[0097] Then, a first channel layer may be deposited along the entire surface of the resultant structure having the first channel hole CH**1** formed therein, an insulating material may be deposited to such a thickness as to completely fill the first channel hole CH**1** having the first channel layer formed therein, and a planarization process may be performed until the top surface of the first stacked structure ST**1** is exposed. As a result, a first channel layer pattern **150**C may be formed along the sidewalls and bottom surface of the first channel hole CH**1**, and a first insulating pattern **170**C may be formed to fill the first channel hole CH**1** having the first channel layer pattern **150**C formed therein.

[0098] In another embodiment (not illustrated), the first channel layer pattern **150**C may have a pillar shape that completely fills the first channel hole CH**1**. In this case, the first insulating pattern **170**C may be omitted. Alternatively, in another embodiment (not illustrated), a blanket etch process may be additionally performed on the first channel layer before the insulating material is deposited and after the first channel layer is deposited.

[0099] Referring to FIG. **5**B, a channel connection pattern **180**A and an etch stop pattern **180**B may be formed over the resultant structure of FIG. **5**A so as to overlap the first channel hole CH**1** and the region in, which a slit is to be formed, respectively. Between the channel connection pattern **180**A and the etch stop pattern **180**B, an insulating material **190** may be provided.

[0100] Then, a second stacked structure ST**2** may be formed, including a plurality of second interlayer dielectric layers **210** and second material layers **220** which are alternately stacked. The second stacked structure ST**2** may be selectively etched to form a plurality of second channel holes CH**2** which expose the respective channel connection patterns **180**A.

[0101] Then, a second channel layer pattern **250**C may be formed along the sidewalk and bottom surface of the second channel hole CH**2** to be in direct contact with the channel connection pattern **180**A. A second insulating pattern **270**C may be formed to fill the rest space of the second channel hole CH**2** having the second channel layer pattern **250**C formed therein.

[0102] Then, a slit S may be formed through the second stacked structure ST**2**, the stop etch pattern **180**B, and the first stacked structure ST**1**.

[0103] Referring to FIG. **5**C, the and second material layers **120** and **220** exposed through the slit S' may be removed through wet etching or the like. The space from which the first and second material layers **120** and **220** were removed may be referred to as a concave groove G.

[0104] Referring to FIG. **5**D, first and second memory layer patterns **140**C and **240**C may be formed along the inner wall of the concave groove G, and first and second gate electrode layers **180** and **280** may be formed to fill the rest space of the concave groove G having the first and second memory layer patterns **140**C and **240**C formed therein.

[0105] The first and second memory layer patterns **140**C and **240**C and the first and second gate electrode layers **180** and **280** may be the resultant structure of FIG. **5**C, depositing a conductive material to such a thickness to sufficiently fill the rest space of the concave groove G having the memory layer formed therein, and removing the memory layer and the conductive material existing in the slit S' by performing a dry etching process on the memory layer and the conductive material.

[0106] The present embodiment may be characterized in that the formation process of the fiat and second memory layer patterns **140**C and **240**C is performed at the same time as the formation process of the flat and second gate electrode layers **180** and **280**, respectively, after the first and second channel layer patterns **150**C and **250**C are formed. Thus, the first and second memory layer patterns **140**C and **240**C may not extend in the vertical direction, and the first and second memory layer patterns **140**C and **240**C for each of the memory cells arranged the vertical direction are separated from each other.

[0107] FIGS. **6**A and **68** are cross-sectional views illustrating a semi conductor device and a method for fabricating the same in, accordance with another embodiment. The detailed descriptions of the same parts as those of the above-described embodiments are omitted herein.

[0108] Referring to FIG. **6**A, a gate electrode layer **105** may be formed by depositing a conductive material on a substrate **100**, and a sacrificial layer **107** may be buried in a groove formed by etching a part the gate electrode layer **105**. The gate electrode layer **105** may be formed of various conductive materials such as a metal, a metal nitride, a semiconductor material doped with an impurity, and a combination thereof.

[0109] The sidewalls and bottom surface of the sacrificial layer **107** may be surrounded by the gate electrode layer **105**. The sacrificial layer **107** may have a bar shape of which a first-direction axis is longer than a second-direction axis, such that the sacrificial layer **107** can overlap a pair of first channel holes which will be arranged in the first direction.

[0110] FIG. **6**A illustrates only one sacrificial layer **107**. However, a plurality of grooves may be formed in the gate electrode layer **105**, and a plurality of sacrificial layers **107** may be buried in the respective grooves. A pair of first channel holes may be formed to overlap each of the sacrificial layers **107**.

[0111] Then, a first stacked structure ST**1** may be formed over the gate electrode layer **105** and the sacrificial layer **107**, the first stacked structure ST**1** including a plurality of first interlayer dielectric layers **110** and first material layers **120** which are alternately stacked.

[0112] Referring to FIG. **6**B, the first stacked structure ST**1** may be selectively etched to form a pair of first channel holes CH**1** each of which exposes the top surface of the sacrificial layer **107**. The exposed sacrificial layer **107** may be removed. As a result, the pair of first channel holes CH**1** and the space from which he sacrificial layer **107** connecting the bottoms of the first channel holes CH**1** was removed may form a U-shaped channel hole.

[0113] Then a first memory layer pattern **140**D and a first channel layer pattern **150**D may be formed along an inner surface of the U shaped channel hole, and the rest space of the U-shaped channel hole may be filled with a first insulating pattern **170**D.

[0114] The subsequent processes may be performed in substantially the same manner as the above-described embodiments. That is, the formation process of the channel connection pattern **180**A and the etch stop pattern **180**B, the formation process of the second stacked structure ST**2**, the second memory layer pattern **240**A, the second channel layer pattern **250**A, and the second epitaxial layer **260**, and

the second insulating pattern **270** and the formation process of the slit S' which have been described with reference to FIGS. **2**C to **2**F may be performed after the process of FIG. **6**B. Alternatively, the process of FIG. **4**D may be performed after the process of FIG. **6**B. Alternatively, the processes of FIGS. **5**B to **5**D may be performed after the process of FIG. **6**B.

[0115] In the present embodiment, as the pair of channel layers are connected to each other at the bottoms thereof, the U-shaped channel layer can be formed (refer to **150**D). One end of the U-shaped channel layer may be controlled by a bit line, and the other end of the U-shaped channel layer may be controlled by a source line.

[0116] The gate electrode layer **105**, the first channel layer pattern **150**D facing the gate electrode layer **10** and the first memory layer pattern **140**D positioned therebetween may form a kind of transistor. According to a voltage applied to the, gate, electrode layer **105**, the transistor may be turned on or off to control the pair of channel layers.

[0117] FIGS. **7**A and **7**B are cross-sectional illustrating a semiconductor device and a method for fabricating the same in accordance with another embodiment. The detailed descriptions of the same parts as those of the above-described embodiments are omitted herein.

[0118] Referring to FIG. **7**A, an insulating layer **106** may be deposited along the inner wall of a groove formed by etching a part of a substrate **100**, and a conductive layer **108** may be buried in the rest space of the groove having the insulating layer **106** deposited therein. The insulating layer **106** may be formed to electrically insulate the conductive layer **108** and the substrate **100** from each other. The insulating layer **106** may be omitted depending on a device design.

[0119] The conductive layer **108** may be in direct contact with a pair of first channel layer patterns **150**E in order to electrically couple the pair of first channel layer patterns **150**E. The conductive layer **108** may be formed of various conductive materials such as a metal, a metal nitride, a semiconductor material doped with an impurity, and a combination thereof. The conductive layer **108** may have a bar shape of which a first-direction axis is longer than a second-direction axis such that the conductive layer **108** can overlap a pair of first channel holes each of which is arranged in the first direction.

[0120] FIG. **7**A illustrates only one conductive layer **10**. However, a plurality of grooves may be formed in the substrate **100**, and a plurality of conductive layers **108** may be buried in the respective grooves. The pair of first channel holes may be formed to overlap each of the conductive layers **108**. Then, a first stacked structure ST**1** may be formed over t he substrate **100** having the insulating layer **106** and, the conductive layer **108** the first stacked structure ST**1** including a plurality of first interlayer dielectric layers **110** and first material layers **120** which are alternately stacked.

[0121] Referring to FIG. **78** the first stacked structure ST**1** may be, selectively etched to form a pair of first channel holes CH**1** each of which exposes the top surface of the conductive layer **108**. Then, a first memory layer pattern **140**E, a first channel layer pattern **150**E, and a first insulating pattern **170**E may be formed in the pair of first channel holes CH**1**. The first memory layer pattern **140**E, the first channel layer pattern **150**E, and the first insulating pattern **170**E may be formed through the processes of FIGS. **4**A to **4**C. In another embodiment, however, the first memory layer pattern **140**A, the first channel layer pattern **150**A, the first epitaxial layer **150**, and the first insulating pattern **170** may be formed in the pair of first channel holes CH**1** through the processes of FIGS. **2**A and **2**B. Alternatively, in another embodiment, the first channel layer pattern **150**C and the first insulating pattern **170**C may be formed in the pair of first channel holes CH**1** through the process of FIG. **5**A.

[0122] As a result of the present process the pair of first channel layer patterns **150**E may be connected to each other through the, conductive layer **108**, and form a U-shaped channel layer.

[0123] The subsequent processes may be performed in substantially the same manner as the above-described embodiments. In other words, after the process of FIG. **7**B, the processes of FIGS. **2**C to **2**F, the process of FIG. **4**, or the processes of FIGS. **5**B to **5**D may be, performed.

[0124] In accordance with the embodiments, the electronic device and the method for fabricating the same can reduce the difficulty level of the process without compromising the memory cell characteristics and the operation characteristics.

[0125] The above and other memory circuits or semiconductor devices based on the disclosed technology can be used in various devices or systems. FIGS. **8**-**12** provide some examples of devices or systems that can implement the memory circuits disclosed herein.

[0126] FIG. **8** is an example of configuration diagram of a microprocessor implementing memory circuitry based on the disclosed technology.

[0127] Referring to FIG. **8**, a microprocessor **1000** may perform tasks for control ling and tuning a series of processes of receiving data from various external devices, processing the data, and outputting processing results to external devices. The microprocessor **1000** may include a memory unit **1010**, an operation unit **1020**, a control unit **1030**, and so on. The microprocessor **1000** may be various data processing units such as a central processing unit (CPU), a graphic processing unit (GPU), a digital signal processor (DSP) and an application processor CAP).

[0128] The memory unit **1010** is a part which stores data in the microprocessor **1000**, as a processor register, register or the like. The memory unit **1010** may include a data register, an address register, a floating point register and so on. Besides, the memory unit **1010** may include various registers. The memory unit **1010** may perform the function of temporarily storing data for which operations are to be performed by the operation unit **1020** result data of performing the operations and addresses where data for performing of the operations are stored.

[0129] The memory unit **1010** may include one or more the above-described semiconductor devices in accordance with the implementations. For example, the memory unit **1010** may include a first channel layer formed over a substrate and extending in a vertical direction; a first stacked structure comprising a plurality of first interlayer dielectric layers and a plurality of first gate electrode layers which are alternately stacked along the first channel layer; a first memory layer interposed between the first channel layer and the first gate electrode layers; a second channel layer formed over the first channel layer and extending in the vertical direction a second stacked structure comprising a plurality of second interlayer dielectric layers and a plurality of second gate electrode layers which are alternately stacked

along the second channel layer; a second memory layer interposed between the second channel layer and the second gate electrode layers; a first channel connection pattern formed between the first channel layer and the second channel layer and coupling the first and the second channel layers to each other; and a first etch stop pattern formed between the first and second stacked structures and at substantially the same level as the first channel connection pattern, wherein the first etch stop pattern includes the same material as the first channel connection pattern and is isolated from the first channel connection pattern. Through this, memory cell characteristics and operating characteristics of the memory unit **1010** may be secured, and processes may be simplified. As a consequence, operating characteristics of the microprocessor **1000** may be improved.

[0130] The operation unit **1020** may perform four arithmetical operations or logical operations according to results that the control unit **1030** decodes commands. The operation unit **1020** may include at least one arithmetic logic unit (ALU) and so on.

[0131] The control unit **1030** may receive signals from the memory unit **1010** the operation unit **1020** and an external device of the microprocessor **1000**, perform extraction, decoding of commands, and controlling input and output of signals of the microprocessor **1000**, and execute processing represented by programs.

[0132] The microprocessor **1000** according to the present implementation may additionally include a cache memory unit **1040** which can temporarily store data to be inputted from an external device other than the memory unit **1010** or to be outputted to an external device. In this case, the cache memory unit **1040** may exchange data with the memory unit **1010**, the operation unit **1020** and the control unit **1030** through a bus interface **1050**.

[0133] FIG. **9** is an example of configuration diagram of a processor implementing memory circuitry based on the disclosed technology.

[0134] Referring to FIG. **9**, a processor **1100** may improve performance and realize multi-functionality by including various functions other than those of a microprocessor which performs tasks for controlling and tuning a series of processes of receiving data from various external devices, processing the data, and outputting processing results to external devices. The processor **1100** may include a core unit **1110** which serves as the microprocessor a cache memory unit **120** which serves to storing data temporarily, and a bus interface **1130** for transferring data between internal and external devices. The processor **1100** may include various system-on-chips (SoCs) such as a multi-core processor a graphic processing unit (GPU) and an application processor (AP).

[0135] The core unit **1110** of the present implementation is a part which performs arithmetic logic operations for data inputted from an external device, and may include a memory unit **1111**, an operation unit **1112** and a control unit **1113**.

[0136] The memory unit **1111** is a part which stores data in the processor **1100** as a processor register, a register or the like. The memory unit **1111** may include a data register, an address register, a floating point register and so on. Besides, the memory unit **1111** may include various registers. The memory unit **1111** may perform the function of temporarily storing data for which operations are to be performed by the operation unit **1112**, result data of performing the operations and addresses where data for performing of the operations are stored. The operation unit **1112** is a part which performs operations in the processor **1100**. The operation unit **1112** may perform four arithmetical operations, logical operations, according to results that the control unit **1113** decodes commands, or the like. The operation unit **1112** may include at least one arithmetic logic unit (ALU) and so on. The control unit **1113** may receive signals from the memory unit **1111**, the operation unit **1112** and an external device of the processor **1100**, perform extraction, decoding of commands, controlling input and output of signals of processor **1100**, and execute processing represented by programs.

[0137] The cache memory unit **1120** is a part which temporarily stores data to compensate for a difference in data processing speed between the core unit **1110** operating at a high speed and an external device operating at a low speed. The cache memory unit **1120** may include a primary storage section **1121**, a secondary storage section **1122** and a tertiary storage section **123**. In general, the cache memory unit **1120** includes the primary and secondary storage sections **1121** and **1122**, and may include the tertiary storage section **1123** in the case where high storage capacity is required. As the occasion demands, the cache memory unit **1120** may include an increased number of storage sections. That is to say, the number of storage sections which are included in the cache memory unit **1120** may be changed according to a design. The speeds at which the primary, secondary and tertiary storage sections **1121**, **1122** and **1123** store and discriminate data may be the same or different. In the case where the speeds of the respective storage sections **1121**, **1122** and **1123** are different, the speed of the primary storage section **1121** may be largest. At least one storage section of the primary storage section **1121**, the secondary storage section **1122** and the tertiary storage section **1123** of the cache memory unit **1120** may include one or more of the above-described semiconductor devices in accordance with the implementations. For example, the cache memory unit **1120** may include a first channel layer formed over a substrate and extending, in a vertical direction; a first stacked structure comprising a plurality of first interlayer dielectric layers and a plurality of firs t gate electrode layers which are alternately stacked along the first channel I layers a first memory layer interposed between the first channel layer and the first gate electrode layers; a second channel layer formed over the first channel layer and extending in the vertical direction; a second stacked structure comprising a plurality of second interlayer dielectric layers and a plurality of second gate electrode layers which are alternately stacked along the second channel layer; a second memory layer interposed between the second channel layer and the second gate electrode layers; a first channel connection pattern formed between the first channel layer and the second channel layer and coupling the first and the second channel layers to each other; and a first etch stop pattern formed between the first and second stacked structures and at substantially the same level as the first channel connection pattern, wherein the first etch stop pattern includes the same material as the first channel connection pattern and is isolated from the first channel connection pattern. Through this, memory cell characteristics and operating characteristics of the cache memory unit **1120** may be secured, and processes may be simplified. As a consequence, operating characteristics of the processor **1100** may be improved.

[0138] Although it was shown in FIG. **9** that all the primary, secondary and tertiary storage sections **1121**, **1122**

and **1123** are configured inside the cache memory unit **1120**, it is to be noted that a the primary, secondary and tertiary storage sections **1121**, **1122** and **1123** of the cache memory unit **1120** may be configured outside the core unit **1110** and may compensate for a difference in data processing speed between the core unit **1110** and the external device. Meanwhile it is to be noted that the primary storage section **1121** of the cache memory unit **1120** may be disposed inside the core unit **1110** and the secondary storage section **1122** and the tertiary storage section **1123** may be configured outside the core unit **1110** to strengthen the function of compensating for a difference in data, processing speed. In another implementation, the primary and secondary storage sections **1121**, **1122** may be disposed inside the core units **1110** and tertiary storage sections **1123** may be disposed outside core units **1110**.

[0139] The bus interface **1130** is a part which connects the core unit **1110**, the cache memory unit **1120** and external device and allows data to be efficiently transmitted.

[0140] The processor **1100** according to the present implementation may include a plurality of core units **1110**, and the plurality of core units **1110** may share the cache memory unit **1120**. The plurality of core units **1110** and the cache memory unit **1120** may be directly connected or be connected through the bus interface **1130**. The plurality of core units **10** may be configured in the same way as the above-described configuration of the core unit **1110**. In the case where the processor **1100** includes the plurality of core unit **1110**, the primary storage section **1121** of the cache memory unit **1120** may be configured in each core unit **1110** in correspondence to the number of the plurality of core units **1110**, and the secondary storage section **1122** and the tertiary storage section **1123** may be configured outside the plurality of core units **1110** in such a way as to be shared through the bus interface **1130**. The processing speed of the primary storage section **1121** may be larger than the processing speeds of the secondary and tertiary storage section **1122** and **1123**. In another implementation, the primary storage section **1121** and the secondary storage section **1122** may be configured in each core unit **1110** in correspondence to the number of the plurality of core units **1110** and the tertiary storage section **1123** may be configured outside the plurality of core units **1110** in such a way as to be shared through the bus interface **1130**.

[0141] The processor **1100** according to the present implementation may further include an embedded memory unit **1140** which stores data, a communication module unit **1150** which can transmit and receive data to and from an external device in a wired or wireless manner, a memory control unit **1160** which drives an external memory device and a media processing unit **1170** which processes the data processed the processor **1100** or the data inputted from an external input device and outputs the processed data to an external interface device and so on. Besides, the processor **1100** may include a plurality of various modules and devices. In this case, the plurality of modules which are added, may exchange data with the, core units **1110** and the cache memory unit **1120** and with one another, through the bus interface **1130**.

[0142] The embedded memory unit **1140** may include not only a volatile memory but also a nonvolatile memory. The volatile memory may include a DRAM (dynamic random access memory) a mobile DRAM, an SRAM (static random access memory) and a memory with similar functions to above mentioned memories, and so on. The nonvolatile memory may include a ROM (read only memory) a NOR flash memory, a NAND flash memory, a phase change random access memory (PRAM), a resistive random access memory (RRAM), a spin transfer torque random access memory (STTRAM) a magnetic random access memory (MRAM), a memory with similar functions.

[0143] The communication module unit **1150** may include a module capable of being connected with a wired network, a module capable of being connected with a wireless network and both of them. The wired network module may include a local area network (LAN), a universal serial bus (USB), an Ethernet, power line communication (PLC) such as various devices which send and receive data through transmit lines, and so on. The wireless network module may include Infrared Data Association (IrDA), code division multiple access (COMA), time division multiple access (TDMA), frequency division multiple access (FDMA), a wireless LAN, Zigbee, a ubiquitous sensor network (USN), Bluetooth, radio frequency identification (RFID), long term evolution (LTE) near field communication (NFC), a wireless broadband Internet (Wibro), high speed downlink packet access (HSDPA), wideband CDMA (WCDMA) ultra wideband (UWB) such as various devices which send and receive data without transmit lines, and so on.

[0144] The memory control unit **1160** is to administrate and process data transmitted between the processor **1100** and an external storage device operating according to a different communication standard. The memory control unit **1160** may include various memory controllers, for example, devices which may control IDE (Integrated Device Electronics), SATA (Serial Advanced Technology Attachment), SCSI (Small Computer System Interface), RAID (Redundant Array of if Independent Disks), an SSD (solid state disk), eSATA (External SATA), PCMCIA (Personal Computer Memory Card International Association), a USE (universal serial bus), a secure digital (SD) card, a mini secure digital (mSD) card, a micro secure digital (micro SD) card, a secure digital high capacity (SDHC) card a memory stick card, a smart media (SM) card, a multimedia card (MMC) an embedded (eMMC), a compact flash (CF) card, and so on.

[0145] The media processing unit **1170** may process the data, processed in the processor **1100** or the data inputted in the forms of image, voice and others from the external input device and output the data to the external interface device. The media processing unit **1170** may include a graphic processing unit (GPU), a digital signal processor (DSP), a high definition audio device (HD audio) a high definition muitimedia interlace (HDMI) controller, and so on.

[0146] FIG. **10** is an example of configuration diagram of a system implementing memory circuitry based on the disclosed technology.

[0147] Referring to FIG. **10**, a system **1200** as an apparatus for processing data may perform input processing, output, communication, storage, etc. to conduct a series of manipulations for data. The system **1200** may include a processor **1210**, a main memory device **1220**, an auxiliary memory device **1230**, an interface device **1240** and so on. The system **1200** of the present implementation may be various electronic systems which operate using processors, such as a computer, a server, a PDA (personal digital assistant), a portable computer, a web tablet, a wireless phone, a mobile phone, a smart phone, a digital music player, a PMP (portable multimedia player), a camera, a

global positioning system (GPS) a video camera, a voice recorder, a telematics, an audio visual (AV) system, a smart television and so on.

[0148] The processor **1210** may decode inputted commands and processes operation comparison, etc. for the data stored in the system **1200** and controls these operations. The processor **1210** may include a microprocessor unit (MPU), a central processing unit (CPU), single/multi-core processor, a graphic processing unit (GPU), application processor (AP), a digital signal processor (DSP), and so on.

[0149] The main memory device **1220** is a storage which can temporarily store, call and execute program codes or data from the auxiliary memory device **1230** when programs are executed and can conserve memorized contents even when power supply is cut off. The main memory device **1220** may include one or more of the above-described semiconductor devices in accordance with the implementations. For example, the main memory device **1220** may include a first channel layer formed over a substrate and extending in a vertical direction; a first stacked structure comprising a plurality of first interlayer dielectric layers and a plurality of first gate electrode layers which are alternately. stacked along the first channel layer; a first memory layer interposed between the first channel layer and the first gate electrode layers; a second channel layer formed over the first channel layer and extending in the vertical direction; a second stacked structure comprising a plurality of second interlayer dielectric layers and a plurality of second gate electrode layers which are alternately stacked along the second channel layer; a second memory layer interposed between the second channel layer and the second gate electrode layers; a first channel connection pattern formed between the first channel layer and the second channel layer and coupling the first and the second channel layers to each other; and a first etch stop pattern formed between the first and second stacked structures and at substantially the same level as the first channel connection pattern, wherein the first etch stop pattern includes the same material as the first channel connection pattern and is isolated from the first channel connection pattern. Through this, memory cell characteristics and operating characteristics of the main memory device **1220** may be secured, and processes may be simplified. As a consequence, operating characteristics of the system **1200** may be improved.

[0150] Also, the main memory device **1220** may further include a static random access memory (SRAM), a dynamic random access memory (DRAM), and so on, of a volatile memory type in which all contents are erased when power supply is cut off. Unlike this, the main memory device **1220** may n include the semiconductor devices according to the implementations, but may include a static random access memory (SRAM), a dynamic random access memory (DRAM), and so on, of a volatile memory type in which all contents are erased when power supply is cut off.

[0151] The auxiliary memory device **1230** is memory device for storing program codes or data. While the speed of the auxiliary memory device **1230** is slower than the main memory device **1220** the auxiliary memory device **1230** can store a larger amount of data. The auxiliary memory device **1230** may include one or more of the above-described semiconductor devices in accordance with the implementations. For example, the auxiliary memory device **1230** may include a first channel layer formed over a substrate and extending in a vertical direction; a first stacked structure comprising a plurality of first interlayer dielectric layers and a plurality of first gate electrode layers which are alternately stacked along the first channel layer; a first memory layer interposed between the first channel layer and the first gate electrode layers; a second channel layer formed over the first channel layer and extending in the vertical direction; a second stacked structure comprising a plurality of second interlayer dielectric layers and a plurality of second gate electrode layers which are alternately stacked along the second channel layer; a second memory layer interposed between the second channel layer and the second gate electrode layers; a first channel connection pattern formed between the first channel layer and the second channel layer and coupling the first and the second channel layers to each other; and a first etch stop pattern formed between the first and second stacked structures and at substantially the same level as the first channel connection pattern, wherein the first etch, stop Pattern includes the same material as the first channel connection pattern arid is isolated from the first channel connection pattern. Through this, memory cell characteristics and operating characteristics of the auxiliary memory device **1230** may be secured, and processes may be simplified. As a consequence, operating characteristics of the system **1200** may be improved.

[0152] Also, the auxiliary memory device **1230** may further include a data storage system (see the reference numeral **1300** of FIG. **10**) such as a magnetic tape using magnetism a magnetic disk, a laser disk using optics, a magneto-optical disc using both magnetism and optics, a solid state disk (SSD), a USB memory (universal serial bus memory), a secure digital (SD) card, a mini secure digital (m D) card, a micro secure digital (micro SD) card, a secure digital high capacity (SDHC) card a memory stick card, a smart media (SM) card, a multimedia card (MMC), an embedded MMC (eMMC) a compact flash (CF) card, and so on. Unlike this, the auxiliary memory device **1230** may not include the semiconductor devices according to the implementations, but may include data storage systems (see the reference numeral **1300** of FIG. **10**) such as a magnetic tape using magnetism, a magnetic disk, a laser disk using optics, a magneto-optical disc using both magnetism and optics, a solid state disk (SSD), a USB memory (universal serial bus memory), a secure digital (SD) card a mini secure digital (mSD) card, micro secure digital (micro SD) card, a secure digital high capacity (SDHC) card, a memory stick card, a smart media (SM) card, a multimedia card (MMC), an embedded MMC (eMMC), a compact flash (CF) card, and so on.

[0153] The interface device **1240** may be to perform exchange of commands and data between the system **1200** of the present implementation and an external device. The interface device **1240** may be a key pad, a keyboard, a mouse, a speaker, a mike, a display, various human interface devices (HIDs), a communication device, and so on. The communication device may include a module capable of being connected with a wire d network, a module capable of being connected with a wireless network and both of them. The wired network module may include a local area network (LAN) a universal serial bus (USB), an Ethernet, power line communication (PLC), such as various devices which send and receive data through transmit lines, and so on. The wireless network module may include Infrared Data Association (IrDA), code division multiple access (CDMA), time division multiple access (TDMA), frequency division mul-

tiple access (FDMA), a wireless LAN, Zigbee, a ubiquitous sensor network (USN), Bluetooth, radio frequency identification (RFID), long term evolution (LTE), near field communication (NFC), a wireless broadband Internet (Wibro), high speed downlink packet access (HSDPA), wideband CDMA (WCDMA) ultra wideband (UWB) such as various devices which send and receive data without transmit lines and so on.

[0154] FIG. **11** is an example of configuration diagram of a data storage system implementing memory circuitry based on the disclosed technology.

[0155] Referring to FIG. **11**, a data storage system **1300** may include a storage device **1310** which has a nonvolatile characteristic as a component for storing data, a controller **1320** which controls the storage device **1310**, an interface **1330** for connection with an external device, and a temporary storage device **1340** for storing data temporarily. The data storage system **1300** may be a disk type such as a hard disk drive (HDD), a compact disc read only memory (CDROM), a digital versatile disc (DVD), a solid state disk (SSD), and so on, and a card type such as a USB memory (universal serial bus memory), a secure digital (SD) card, a mini secure digital (mSD) card, a micro secure digital (micro SD) card, a secure digital high capacity (SDHC) card, a memory stick card, a smart media (SM) card, a multimedia card (MMC) an embedded MMC (eMMC) a compact flash (CF) card, and so on.

[0156] The storage device **1310** may include a nonvolatile memory which stores data semi-permanently. The nonvolatile memory may include a ROM (read only memory), a NOR flash memory, a NAND flash memory, a phase change random access memory (PRAM), a resistive random access memory (RRAM), a magnetic random access memory (MRAM), and so on.

[0157] The controller **1320** may control exchange of data between the storage device **1310** and the interface **1330**. To this end, the controller **1320** may include a processor **1321** for performing an operation for, processing commands inputted through the interface **1330** from are outside of the data storage system **1300** and so or

[0158] The interface **1330** is to perform exchange of commands and data between the data storage system **1300** and the external device. In the case where the data storage system **1300** is a card type, the interface **1330** may be compatible with interfaces which are used in devices, such as a USB memory (universal serial bus memory), a secure digital (SD) card, a mini secure digital (mSD) card, a micro secure digital (micro SD) card a secure digital high capacity (SDHC) card, a memory stick card, a smart media (S M) card, a multimedia card (MMC), an embedded MMC (eMMC), a compact flash (CF) card and so on or be compatible with interfaces which are used in devices similar to the above mentioned devices. In the case where the data storage system **1300** is a disk type, the interface **1330** may be compatible with interfaces, such as IDE (Integrated Device Electronics), SATA (Serial Advanced Technology Attachment), SCSI (Small Computer System Interface), eSATA (External SATA), PCMCIA: (Personal Computer Memory Card International Association), a USB (universal serial bus), and so on, or be compatible with the interfaces which are similar to the above mentioned interfaces. The interface **1330** may be compatible with one or more interfaces having a different type from each other.

[0159] The temporary storage device **1340** can store data temporarily for efficiently transferring data between the interface **1330** and the storage device **1310** according to diversifications and high performance of an interface with an external device, a controller and a system. The temporary storage device **1340** for temporarily storing data may include one or more of the above-described semiconductor devices in accordance with the implementations. The temporary storage device **1340** may include a first channel layer formed over a substrate and extending in a vertical direction; a first stacked structure comprising a plurality of first interlayer dielectric layers and a plurality of first gate electrode layers which are alternately stacked along the first channel layer; a first memory layer interposed between the first channel layer and the first gate electrode layers; a second channel layer formed over the first channel layer and extending in the vertical direction; a second stacked structure comprising a plurality of second interlayer dielectric layers and a plurality of second gate electrode layers which are alternately stacked along the second channel layer; a second memory layer interposed between the second channel layer and the second gate, electrode layers; a first channel connection pattern formed between the first channel layer and the second channel layer and coupling the first and the second channel layers to each other; and a first etch stop pattern formed between the first and second stacked structures and at substantially the same level as the first channel connection pattern, wherein the first etch stop pattern includes the same material as the first channel connection pattern and is isolated from the first channel connection pattern. Through this, memory cell characteristics and operating characteristics of the storage device **1310** or the temporary storage device **1340** may be secured, and processes may be simplified. As a consequence, operating characteristics and data storage characteristics of the data storage system **1300** may be improved.

[0160] FIG. **12** is an example of configuration diagram of a memory system implementing memory circuitry based on the disclosed technology.

[0161] Referring to FIG. **12**, a memory system **1400** may in de a memory **1410** which has a nonvolatile characteristic as a component for storing data, a memory controller **1420** which controls the memory **1410**, an interface **1430** for connection with an external device, and so on. The memory system **1400** may be a card type such as a solid state disk (SSD), a USB memory (universal serial bus memory), a secure digital (SD) card, a mini secure digital (mSD) card, a micro secure digital (micro SD) card, a secure digital high capacity (SDHC) card, a memory stick card, a smart media (SM) card, a multimedia card (MMC), an embedded MMC (eMMC), a compact flash (CF) card, and so on.

[0162] The memory **1410** for storing data may include one or more of the above-described semiconductor devices in accordance with the implementations. For example, the memory **1410** may include a first channel layer ed over a substrate and extending in a vertical direction; a first stacked structure comprising a plurality of first interlayer dielectric layers and a plurality of first gate electrode layers which are alternately stacked a long the first channel layer; a first memory layer interposed between the first channel layer and the first gate electrode layers; a second channel layer formed over the first channel layer and extending in the vertical direction; a second stacked structure comprising a plurality of second interlayer dielectric layers and a plurality of

second gate electrode layers which are alternately stacked along the second channel layer; a second memory layer interposed between the second channel layer and the second gate electrode layers; a first channel connection pattern formed between the first channel layer and the second channel layer and coupling the first and the second channel layers to each other; and a first etch stop pattern formed between the first and second stacked structures and at substantially the same level as the first channel connection pattern, wherein the first etch, stop pattern includes the same material as the first channel connection pattern and is isolated from the first channel connection pattern. Through this, memory cell characteristics and operating characteristics of the memory **1410** may be secured, and processes may be simplified. As a consequence, operating characteristics and data storage characteristics of the memory system **1400** may be improved.

[0163] Also, the memory **1410** according t the present implementation may further include a ROM (read only memory), a NOR flash memory, a NAND flash memory, a phase change random access memory (PRAM), a resistive random access memory (RRAM), a magnetic random access memory (MRAM), and so on, which have a nonvolatile characteristic.

[0164] The memory controller **1420** may control exchange of data between the memory **1410** and the interface **1430**. To this end, the memory controller **1420** may include a processor **1421** for performing an operation for and processing commands inputted through the interface **1430** from an outside of the memory system **1400**.

[0165] The interface **1430** is to perform exchange of commands and data between the memory system **1400** and the external device. The interface **1430** may be compatible with interfaces which are used in devices, such as a USB memory (universal serial bus memory), a secure digital (SD) card a mini secure digital (mSD) card, a micro secure digital (micro SD) card, a secure digital high capacity (SDHC) card, a memory stick card, a smart media (SM) card, a multimedia card (MMC), an embedded MMC (eMMC), a compact flash (CF) card, and so on, or be compatible with interfaces which are used in devices similar to the above mentioned devices. The interface **1430** may be compatible with one or more interfaces having a different type from each other.

[0166] The memory system **1400** according to the present implementation may further include a buffer memory **1440** for efficiently transferring data between the interface **1430** and the memory **1410** according to diversification and high performance of an interface with an external device, a memory controller and a memory system. For example, the buffer memory **1440** for temporarily storing data may include one or more of the above-described semiconductor devices in accordance with the implementations. The buffer memory **1440** may include a first channel layer formed over a substrate and extending in vertical direction; a first stacked structure comprising a plurality of first interlayer dielectric layers and a plurality of first gate electrode layers which are alternately stacked along the first channel layer; a first memory layer interposed between the first channel layer and the first gate electrode layers; a second channel layer formed over the first channel layer and extending in the vertical direction; a second stacked structure comprising a plurality of second interlayer dielectric layers and a plurality of second gate electrode layers which are alternately stacked along the second channel layer; a second memory layer interposed between the second channel layer and the second gate electrode layers; a first channel connection pattern formed between the first channel layer and the second channel layer and coupling the first and the second channel layers to each other; and a first etch stop pattern formed between the first and second stacked structures and at substantially the same level as the first channel connection pattern, wherein the first etch stop pattern includes the same material as the first channel connection pattern and is isolated from the first channel connection pattern. Through this, memory cell characteristics and operating characteristics of the buffer memory **1440** may be secured, and processes may be simplified. As a consequence, operating characteristics and data storage characteristics of the memory system **1400** may be improved.

[0167] Moreover, the buffer memory **1440** according to the present implementation may further include an SRAM (static random access memory) a DRAM (dynamic random access memory) and so on, which have a volatile characteristic, and a phase change random access memory (PRAM), a resistive random access memory (RRAM), a spin transfer torque random access memory (STTRAM), a magnetic random access memory (MRAM), and so on, which have a nonvolatile characteristic. Unlike this the buffer memory **1440** may not include the, semiconductor devices according to the implementations, but may include an SRAM (static random access memory), a DRAM (dynamic random access memory), and so on, which have a volatile characteristic, and a phase change random access memory (PRAM), a resistive random access memory (RRAM), a spin transfer torque random access memory (STTRAM), a magnetic random access memory (MRAM), and so on, which have a nonvolatile characteristic.

[0168] Although various embodiments have been described for illustrative purposes, it will be apparent to those skilled in the art that various changes and modifications may be made without departing from the spirit and scope of the invention as defined in the following claims.

What is claimed is:

1. An electronic device comprising a semiconductor memory the semiconductor memory comprising:

a first channel layer formed over a substrate and extending in a vertical direction;

a first stacked structure comprising a plurality of first interlayer dielectric layers and a plurality of first gate electrode layers which are alternately stacked along the first channel layer;

a first memory layer interposed between the first channel layer and the first gate electrode layers;

a second channel layer formed over the first channel layer and extending in the vertical direction;

a second stacked structure comprising a plurality of second interlayer dielectric layers and a plurality of second gate electrode layers which are alternately stacked along the second channel layer;

a second memory layer interposed between the second channel layer and the second gate electrode layers;

a first channel connection pattern formed between the first channel layer and the second channel layer and coupling the first and the second channel layers to each other; and

a first etch stop pattern formed between the first and second stacked structures and at substantially the same level as the first channel connection pattern,

wherein the first etch stop pattern includes the same material as the first channel connection pattern and is isolated from the first channel connection pattern.

2. The electronic device of claim **1**, wherein the semiconductor memory further comprises:

an insulating material provided between the first channel connection pattern and the first etch stop pattern.

3. The electronic device of claim **1** wherein, the first channel connection pattern has a width greater than a top surface of the first channel layer and a bottom surface of the second channel layer.

4. The electronic device of claim **1**, wherein the semiconductor memory further comprises:

a first slit passing through the first stacked structure, the first etch stop pattern, and the second stacked structure.

5. The electronic device of claim **4**, wherein the first etch stop pattern has a width greater than the first slit.

6. The electronic device of claim **1**, wherein the semiconductor memory further comprises:

a third channel layer passing through the first stacked structure, wherein the first and the third channel layers are arranged in parallel to each other and at substantially the same level;

a fourth channel layer passing through the second stacked structure, wherein the second and the fourth channel layers are arranged in parallel to each other and at substantially the same level; and

a second channel connection pattern formed between the third channel layer and the fourth channel layer and coupling the third and fourth channel layers to each other and

wherein each of the first and the second channel connection patterns has an island shape.

7. The electronic device of claim **1**, wherein the semiconductor memory further comprises:

a second etch stop pattern formed between the first and second stacked structures and at substantially the same level as the first etch stop pattern; and

a second slit passing through the first stacked structure, the second etch stop pattern, and the second stacked structure.

8. The electronic device of claim **4**, wherein the semiconductor memory further comprises:

a second slit passing through the first stacked structure, the first etch stop pattern, and the second stacked structure.

9. The electronic device of claim **1**, wherein each of the first channel connection pattern and the first etch stop pattern comprises a conductive material.

10. The electronic device of claim **1**,

wherein the semiconductor memory further comprises a first epitaxial layer,

wherein the first channel layer has a tube shape a hollow center,

wherein the first memory layer surrounds are outer sidewall and a bottom surface of the first channel layer, and

wherein the first epitaxial layer extends from the substrate to the hollow center of the first channel layer to connect the substrate and the first channel layer to each other.

11. The electronic device of claim **1**,

wherein the semiconductor memory further comprises a second epitaxial layer,

wherein the second channel layer has a tube shape with a hollow center,

wherein the second memory layer surrounds an outer sidewall and a bottom surface of the second channel layer, and

wherein the second epitaxial layer extends from the substrate to the hollow center of the second channel layer to connect the substrate and the second channel layer to each other.

12. The electronic device of claim wherein the first channel layer is in direct contact with the substrate.

13. The electronic device of clam **1**, wherein the second channel layer is in direct contact with the first channel connection pattern.

14. The electronic device of claim **1**, wherein the first memory layer further extends between the first interlayer dielectric layer and the first gate electrode layer.

15. The electronic device of claim **1**, wherein the second memory layer further extends between the second interlayer dielectric layer and the second gate electrode layer,

16. The electronic device of claim **1**,

wherein the semiconductor memory further comprises a third channel layer and a connection member,

wherein the third channel layer passes through the first stacked structure and is arranged in parallel to the first channel layer at substantially the same level, and

wherein the connection member is formed in the substrate and coupled to bottoms of the first and the third channel layers,

17. The electronic device of claim **16**,

wherein the semiconductor memory further comprises an additional gate electrode layer and an insulating layer,

wherein the additional gate electrode layer is formed in the substrate,

wherein the connection member is formed of the same material as the first channel layer and formed in the additional gate electrode layer, and

wherein the insulating layer is positioned between the additional gate electrode and the substrate.

18. The electronic device of claim **16**, rein he connection member includes conductive material,

19. The electronic device of claim **1**, further comprising a processor which includes:

a core unit configured to perform, based on a command inputted from an outside of the processor, an operation corresponding to the command, and by using data;

a cache memory unit configured to store data for performing the operation, data corresponding to a result of performing the operation, or an address of data for which the operation is performed; and

a bus interface connected between the core unit and the cache memory unit, and configured to transmit data between the core unit and the cache memory unit,

wherein the semiconductor memory is of the cache memory unit in the processor.

20. The electronic device of claim **1**, further comprising a data storage system which includes:

a storage device configured to store data and conserve stored data regardless of power supply;

a controller configured to control input and output of data to and from the storage device according to a command inputted form an outside;

a temporary storage device configured to temporarily store data exchanged between the storage device and the outside; and

an interface configured to perform communication between at least one of the storage device, the controller and the temporary storage device and the outside,

wherein the semiconductor memory is part of the storage device or the temporary storage device in the data storage system.

* * * * *