PTO/AIA/14 (03-13)
Approved for use through 01/31/2014. OMB 0651-0032
U.S. Patent and Trademark Office; U.S. DEPARTMENT OF COMMERCE
Under the Paperwork Reduction Act of 1995, no persons are required to respond to a collection of information unless it contains a valid OMB control number.

Application Data Sheet 37 CFR 1.76	Attorney Docket Number	067055-002000
	Application Number	
Title of Invention	DEVICES, SYSTEMS AND METHODS OF CAPTURING AND DISPLAYING APPEARANCES	

The application data sheet is part of the provisional or nonprovisional application for which it is being submitted. The following form contains the bibliographic data arranged in a format specified by the United States Patent and Trademark Office as outlined in 37 CFR 1.76.
This document may be completed electronically and submitted to the Office in electronic format using the Electronic Filing System (EFS) or the document may be printed and included in a paper filed application.

Secrecy Order 37 CFR 5.2

☐ Portions or all of the application associated with this Application Data Sheet may fall under a Secrecy Order pursuant to 37 CFR 5.2 (Paper filers only. Applications that fall under Secrecy Order may not be filed electronically.)

Inventor Information:

Inventor 1 Remove

Legal Name

Prefix	Given Name	Middle Name	Family Name	Suffix
	Nissi		Vilcovsky	

Residence Information (Select One) ○ US Residency ◉ Non US Residency ○ Active US Military Service

City	Tokyo	Country of Residence i	JP

Mailing Address of Inventor:

Address 1	2-22-18-501 Ebisu, Shibuy		
Address 2			
City	Tokyo	**State/Province**	
Postal Code	150 0013	**Country** i	JP

Inventor 2 Remove

Legal Name

Prefix	Given Name	Middle Name	Family Name	Suffix
	Ofer		Saban	

Residence Information (Select One) ◉ US Residency ○ Non US Residency ○ Active US Military Service

City	Vienna	State/Province	VA	Country of Residence i	US

Mailing Address of Inventor:

Address 1	1983 Horse Shoe Drive		
Address 2			
City	Vienna	**State/Province**	VA
Postal Code	22182	**Country** i	US

All Inventors Must Be Listed - Additional Inventor Information blocks may be generated within this form by selecting the **Add** button. Add

Correspondence Information:

Under the Paperwork Reduction Act of 1995, no persons are required to respond to a collection of information unless it contains a valid OMB control number.

Application Data Sheet 37 CFR 1.76	Attorney Docket Number	067055-002000
	Application Number	
Title of Invention	DEVICES, SYSTEMS AND METHODS OF CAPTURING AND DISPLAYING APPEARANCES	

Enter either Customer Number or complete the Correspondence Information section below. For further information see 37 CFR 1.33(a).			
☐ **An Address is being provided for the correspondence Information of this application.**			
Customer Number	46188		
Email Address	PatentSV@nixonpeabody.com	Add Email	Remove Email

Application Information:

Title of the Invention	DEVICES, SYSTEMS AND METHODS OF CAPTURING AND DISPLAYING APPEARANCES		
Attorney Docket Number	067055-002000	**Small Entity Status Claimed**	☒
Application Type	Nonprovisional		
Subject Matter	Utility		
Total Number of Drawing Sheets (if any)	10	**Suggested Figure for Publication (if any)**	

Publication Information:

☐ Request Early Publication (Fee required at time of Request 37 CFR 1.219)
☐ **Request Not to Publish.** I hereby request that the attached application not be published under 35 U.S.C. 122(b) and certify that the invention disclosed in the attached application **has not and will not** be the subject of an application filed in another country, or under a multilateral international agreement, that requires publication at eighteen months after filing.

Representative Information:

Representative information should be provided for all practitioners having a power of attorney in the application. Providing this information in the Application Data Sheet does not constitute a power of attorney in the application (see 37 CFR 1.32).
Either enter Customer Number or complete the Representative Name section below. If both sections are completed the customer Number will be used for the Representative Information during processing.

Please Select One:	◉ Customer Number	◯ US Patent Practitioner	◯ Limited Recognition (37 CFR 11.9)
Customer Number	46188		

Domestic Benefit/National Stage Information:

This section allows for the applicant to either claim benefit under 35 U.S.C. 119(e), 120, 121, or 365(c) or indicate National Stage entry from a PCT application. Providing this information in the application data sheet constitutes the specific reference required by 35 U.S.C. 119(e) or 120, and 37 CFR 1.78.

Prior Application Status			Remove
Application Number	Continuity Type	Prior Application Number	Filing Date (YYYY-MM-DD)
	Continuation in part of	13088369	2011-04-17
Prior Application Status	Patented		Remove

Application Data Sheet 37 CFR 1.76	Attorney Docket Number	067055-002000
	Application Number	
Title of Invention	DEVICES, SYSTEMS AND METHODS OF CAPTURING AND DISPLAYING APPEARANCES	

Application Number	Continuity Type	Prior Application Number	Filing Date (YYYY-MM-DD)	Patent Number	Issue Date (YYYY-MM-DD)
13088369	Continuation of	11817411	2007-08-30	7948481	2011-05-24

Prior Application Status			Remove
Application Number	Continuity Type	Prior Application Number	Filing Date (YYYY-MM-DD)
11817411	a 371 of international	PCT/IL06/000281	2006-03-01
Prior Application Status			Remove
Application Number	Continuity Type	Prior Application Number	Filing Date (YYYY-MM-DD)
PCT/IL06/000281	non provisional of	60656884	2005-03-01
Prior Application Status			Remove
Application Number	Continuity Type	Prior Application Number	Filing Date (YYYY-MM-DD)
PCT/IL06/000281	non provisional of	60656885	2005-03-01
Prior Application Status			Remove
Application Number	Continuity Type	Prior Application Number	Filing Date (YYYY-MM-DD)
	non provisional of	61738957	2012-12-18

Additional Domestic Benefit/National Stage Data may be generated within this form by selecting the **Add** button. Add

Foreign Priority Information:

This section allows for the applicant to claim priority to a foreign application. Providing this information in the application data sheet constitutes the claim for priority as required by 35 U.S.C. 119(b) and 37 CFR 1.55(d). When priority is claimed to a foreign application that is eligible for retrieval under the priority document exchange program (PDX) [i] the information will be used by the Office to automatically attempt retrieval pursuant to 37 CFR 1.55(h)(1) and (2). Under the PDX program, applicant bears the ultimate responsibility for ensuring that a copy of the foreign application is received by the Office from the participating foreign intellectual property office, or a certified copy of the foreign priority application is filed, within the time period specified in 37 CFR 1.55(g)(1).

Remove

Application Number	Country [i]	Filing Date (YYYY-MM-DD)	Access Code [i] (if applicable)

Additional Foreign Priority Data may be generated within this form by selecting the **Add** button. Add

Application Data Sheet 37 CFR 1.76	Attorney Docket Number	067055-002000
	Application Number	
Title of Invention	DEVICES, SYSTEMS AND METHODS OF CAPTURING AND DISPLAYING APPEARANCES	

Statement under 37 CFR 1.55 or 1.78 for AIA (First Inventor to File) Transition Applications

☐ This application (1) claims priority to or the benefit of an application filed before March 16, 2013 and (2) also contains, or contained at any time, a claim to a claimed invention that has an effective filing date on or after March 16, 2013.

Authorization to Permit Access:

☒ Authorization to Permit Access to the Instant Application by the Participating Offices

If checked, the undersigned hereby grants the USPTO authority to provide the European Patent Office (EPO), the Japan Patent Office (JPO), the Korean Intellectual Property Office (KIPO), the World Intellectual Property Office (WIPO), and any other intellectual property offices in which a foreign application claiming priority to the instant patent application is filed access to the instant patent application. See 37 CFR 1.14(c) and (h). This box should not be checked if the applicant does not wish the EPO, JPO, KIPO, WIPO, or other intellectual property office in which a foreign application claiming priority to the instant patent application is filed to have access to the instant patent application.

In accordance with 37 CFR 1.14(h)(3), access will be provided to a copy of the instant patent application with respect to: 1) the instant patent application-as-filed; 2) any foreign application to which the instant patent application claims priority under 35 U.S.C. 119(a)-(d) if a copy of the foreign application that satisfies the certified copy requirement of 37 CFR 1.55 has been filed in the instant patent application; and 3) any U.S. application-as-filed from which benefit is sought in the instant patent application.

In accordance with 37 CFR 1.14(c), access may be provided to information concerning the date of filing this Authorization.

Applicant Information:

Providing assignment information in this section does not substitute for compliance with any requirement of part 3 of Title 37 of CFR to have an assignment recorded by the Office.

Applicant 1 Remove

If the applicant is the inventor (or the remaining joint inventor or inventors under 37 CFR 1.45), this section should not be completed. The information to be provided in this section is the name and address of the legal representative who is the applicant under 37 CFR 1.43; or the name and address of the assignee, person to whom the inventor is under an obligation to assign the invention, or person who otherwise shows sufficient proprietary interest in the matter who is the applicant under 37 CFR 1.46. If the applicant is an applicant under 37 CFR 1.46 (assignee, person to whom the inventor is obligated to assign, or person who otherwise shows sufficient proprietary interest) together with one or more joint inventors, then the joint inventor or inventors who are also the applicant should be identified in this section.

Clear

○ Assignee	○ Legal Representative under 35 U.S.C. 117	○ Joint Inventor
○ Person to whom the inventor is obligated to assign.	○ Person who shows sufficient proprietary interest	

Under the Paperwork Reduction Act of 1995, no persons are required to respond to a collection of information unless it contains a valid OMB control number.

Application Data Sheet 37 CFR 1.76	Attorney Docket Number	067055-002000
	Application Number	
Title of Invention	DEVICES, SYSTEMS AND METHODS OF CAPTURING AND DISPLAYING APPEARANCES	

If applicant is the legal representative, indicate the authority to file the patent application, the inventor is:

Name of the Deceased or Legally Incapacitated Inventor :

If the Applicant is an Organization check here. ☐

Prefix	**Given Name**	Middle Name	**Family Name**	Suffix

Mailing Address Information:

Address 1			
Address 2			
City		**State/Province**	
Country i		Postal Code	
Phone Number		Fax Number	
Email Address			

Additional Applicant Data may be generated within this form by selecting the Add button. Add

Non-Applicant Assignee Information:

Providing assignment information in this section does not subsitute for compliance with any requirement of part 3 of Title 37 of CFR to have an assignment recorded by the Office.

Assignee 1

Complete this section only if non-applicant assignee information is desired to be included on the patent application publication in accordance with 37 CFR 1.215(b). Do not include in this section an applicant under 37 CFR 1.46 (assignee, person to whom the inventor is obligated to assign, or person who otherwise shows sufficient proprietary interest), as the patent application publication will include the name of the applicant(s).

Remove

If the Assignee is an Organization check here. ☐

Prefix	**Given Name**	Middle Name	**Family Name**	Suffix

Under the Paperwork Reduction Act of 1995, no persons are required to respond to a collection of information unless it contains a valid OMB control number.

Application Data Sheet 37 CFR 1.76	Attorney Docket Number	067055-002000
	Application Number	
Title of Invention	DEVICES, SYSTEMS AND METHODS OF CAPTURING AND DISPLAYING APPEARANCES	

Mailing Address Information:			
Address 1			
Address 2			
City		**State/Province**	
Country i		Postal Code	
Phone Number		Fax Number	
Email Address			

Additional Assignee Data may be generated within this form by selecting the Add button. Add

Signature:

Remove

NOTE: This form must be signed in accordance with 37 CFR 1.33. See 37 CFR 1.4 for signature requirements and certifications					
Signature	/Joseph Bach/			Date (YYYY-MM-DD)	2013-03-15
First Name	Joseph	Last Name	Bach	Registration Number	37771

Additional Signature may be generated within this form by selecting the Add button. Add

This collection of information is required by 37 CFR 1.76. The information is required to obtain or retain a benefit by the public which is to file (and by the USPTO to process) an application. Confidentiality is governed by 35 U.S.C. 122 and 37 CFR 1.14. This collection is estimated to take 23 minutes to complete, including gathering, preparing, and submitting the completed application data sheet form to the USPTO. Time will vary depending upon the individual case. Any comments on the amount of time you require to complete this form and/or suggestions for reducing this burden, should be sent to the Chief Information Officer, U.S. Patent and Trademark Office, U.S. Department of Commerce, P.O. Box 1450, Alexandria, VA 22313-1450. DO NOT SEND FEES OR COMPLETED FORMS TO THIS ADDRESS. **SEND TO: Commissioner for Patents, P.O. Box 1450, Alexandria, VA 22313-1450.**

Privacy Act Statement

The Privacy Act of 1974 (P.L. 93-579) requires that you be given certain information in connection with your submission of the attached form related to a patent application or patent. Accordingly, pursuant to the requirements of the Act, please be advised that: (1) the general authority for the collection of this information is 35 U.S.C. 2(b)(2); (2) furnishing of the information solicited is voluntary; and (3) the principal purpose for which the information is used by the U.S. Patent and Trademark Office is to process and/or examine your submission related to a patent application or patent. If you do not furnish the requested information, the U.S. Patent and Trademark Office may not be able to process and/or examine your submission, which may result in termination of proceedings or abandonment of the application or expiration of the patent.

The information provided by you in this form will be subject to the following routine uses:

1. The information on this form will be treated confidentially to the extent allowed under the Freedom of Information Act (5 U.S.C. 552) and the Privacy Act (5 U.S.C. 552a). Records from this system of records may be disclosed to the Department of Justice to determine whether the Freedom of Information Act requires disclosure of these records.

2. A record from this system of records may be disclosed, as a routine use, in the course of presenting evidence to a court, magistrate, or administrative tribunal, including disclosures to opposing counsel in the course of settlement negotiations.

3. A record in this system of records may be disclosed, as a routine use, to a Member of Congress submitting a request involving an individual, to whom the record pertains, when the individual has requested assistance from the Member with respect to the subject matter of the record.

4. A record in this system of records may be disclosed, as a routine use, to a contractor of the Agency having need for the information in order to perform a contract. Recipients of information shall be required to comply with the requirements of the Privacy Act of 1974, as amended, pursuant to 5 U.S.C. 552a(m).

5. A record related to an International Application filed under the Patent Cooperation Treaty in this system of records may be disclosed, as a routine use, to the International Bureau of the World Intellectual Property Organization, pursuant to the Patent Cooperation Treaty.

6. A record in this system of records may be disclosed, as a routine use, to another federal agency for purposes of National Security review (35 U.S.C. 181) and for review pursuant to the Atomic Energy Act (42 U.S.C. 218(c)).

7. A record from this system of records may be disclosed, as a routine use, to the Administrator, General Services, or his/her designee, during an inspection of records conducted by GSA as part of that agency's responsibility to recommend improvements in records management practices and programs, under authority of 44 U.S.C. 2904 and 2906. Such disclosure shall be made in accordance with the GSA regulations governing inspection of records for this purpose, and any other relevant (i.e., GSA or Commerce) directive. Such disclosure shall not be used to make determinations about individuals.

8. A record from this system of records may be disclosed, as a routine use, to the public after either publication of the application pursuant to 35 U.S.C. 122(b) or issuance of a patent pursuant to 35 U.S.C. 151. Further, a record may be disclosed, subject to the limitations of 37 CFR 1.14, as a routine use, to the public if the record was filed in an application which became abandoned or in which the proceedings were terminated and which application is referenced by either a published application, an application open to public inspections or an issued patent.

9. A record from this system of records may be disclosed, as a routine use, to a Federal, State, or local law enforcement agency, if the USPTO becomes aware of a violation or potential violation of law or regulation.

DEVICES, SYSTEMS AND METHODS OF CAPTURING AND DISPLAYING APPEARANCES

CROSS REFERENCE TO RELATED APPLICATIONS

[0001] This application is Continuation-in-Part of U.S. Application No. 13/088,369, filed April 17, 2011, which is a continuation of U.S. Application No. 11/817,411, now patent 7,948,481, issued May 24, 2011, and which was a National Phase Application of PCT International Application No. PCT/IL06/000281, International Filing Date March 1, 2006, which claims the benefit of U.S. Provisional Application No. 60/656,884, filed March 1, 2005, and U.S. Provisional Application No. 60/656,885, filed March 1, 2005. This application further claims the priority benefit of U.S. Provisional Application No. 61/738,957, filed December 18, 2012. The entire disclosures of all of the above listed applications are incorporated herein by reference.

BACKGROUND

1. Field

[0002] The invention relates generally to imaging and display systems and, more particularly, to monitors, and interactive displays, e.g., in retail and/or service environments, medical or home situations, video conferencing, gaming, etc. Specific implementations relate to making a flat panel display appear as a mirror. Another specific implementation relates to making a flat panel display provide a video of a person looking at his eyes to create an eye to eye video conference.

2. Related Art

[0003] Customers may shop for consumer articles, for example, apparel such as clothes, e.g., shirts, pants, coats and other garments, as well as shoes, glasses, and/or any other items or products, such as cosmetics, furniture and the like. Shopping normally takes place at a shopping facility, for example, retail stores. Prior to making a decision which article to buy, a customer may try on various articles (e.g., apparel, cosmetics) and/or pose with other background articles (e.g., furniture), and may view for each trial a user-appearance in front of a mirror, which may be located, for example, at a trial area of the retail store. For example, the customer may try on a first article, e.g., a suit, and view for that first trial his/her user-appearance in front of the mirror.

Then, the customer may try on a second article, e.g., another suit. The customer may then need to memorize his/her user-appearance from the first trial in order to perform a mental comparison between the first article and the second article, thereby to evaluate which of the two articles might be a better fit for the customer.

[0004] Unfortunately, since the customer may try on numerous articles and/or since the second trial may take place a considerable amount of time after the first trial or even at a different store, the customer may not be able to recall his/her appearance for each trial and may therefore be required to repeatedly retry articles, e.g., items of apparels, previously tried on. This may result in a frustrating and inefficient shopping experience.

[0005] The conventional mirror (i.e., reflective surface) is the common and most reliable tool for an individual to explore actual self-appearance, in real time. A few alternatives have been proposed by prior art around the combination of a camera and a screen to replace the conventional mirror. However, these techniques are not convincing and are not yet accepted as a reliable image of the individual as if he was looking at himself in a conventional mirror. This is mainly because the image generated by a camera is very different from an image generated by a mirror.

[0006] When a user looks at himself in the mirror, what he actually sees is the reflection of himself as if he was standing at a distance that is double the distance from him to the mirror. This is illustrated in Figure 5A, wherein the user standing at distance D1 sees himself at a distance equal to twice D1. Similarly, as shown in Figure 5B, a user standing at distance D2 will see himself at a distance 2xD2. In addition, the angle of the user's Field of View (FOV) changes when the user changes the distance, e.g., gets closer, to the mirror. The FOV is limited by the specular reflecting angle (β) from the mirror to the user's eye and to the edge of the visible image on all sides of the mirror (four sides for a rectangular or square mirror). In Figure 5B the bottom of the vertical FOV is illustrated as double the angle (β) formed by the lines connecting the user's eyes to the bottom of the mirror and reflecting to the user's shoes. Consequently, as illustrated in Figure 5B, when the user approaches the mirror, the FOV angle increases, which is why he continues to see the same size reflection (FOV1 < FOV2), so that the user actually sees himself roughly at the same size, but closer. This is a noticeable difference from a camera, wherein as the user gets closer to the camera, he appears larger in the image. This is mainly

because the FOV of a camera is fixed and is determined mainly by the size of the camera lens, or focal length.

[0007] There are other phenomena to note regarding reflection of a mirror. For example, when the user approaches the mirror, the reflection of his eyes will always stay on the same virtual line into the mirror. Conversely, depending on a camera's height, as the user gets closer to the camera, the user's eyes may appear at different levels. Another difference from a camera is that when one looks at a mirror, one's image appears to be reversed (e.g., if one raises one's right hand, his left hand will appear to go up in the mirror). However, a mirror does not "swap" left and right any more than it swaps top and bottom. A mirror reverses the forward/backward axis (i.e., what's in front of the mirror appears to be behind the mirror), and we define left and right relative to front and back. Also, because the image in the mirror is virtual, the mirror can be smaller than the full body and the user will still see the reflection of his full body. The reason is that the specular reflection (in Figure 5A the angle of incidence β equals to the reflection angle β) can increase the effective field of view while the user approaches the mirror. Moreover, although the mirror is a two dimensional object, the user sees his appearance in three dimensions.

[0008] For at least some of the reasons noted above, so far no system has been provided for imitating a mirror convincingly. Imitating a mirror can have many applications in retail and other fields, and opens the possibility of incorporating real life experiences with virtual life experiences, such as sharing on social networks and other mobile technologies.

SUMMARY

[0009] Some demonstrative embodiments of the invention include devices, systems and/or methods enabling appearance comparison.

[0010] According to some demonstrative embodiments of the invention, a system enabling appearance comparison may include at least one interactive imaging and display station. The station may include, for example, a mirror display device capable of operating in either or both a mirror or a display mode; an imaging device to capture one or more appearances from a field of view in front of the mirror-display device; and/or an image control unit to select the mode of operation the mirror display device according to a user command. The mirror display device may be in the form of a flat panel TV, wherein during mirror mode the TV

Microsoft Ex. 1002 - Page 10 of 451

presents a transposed live video feed from the camera, while during display mode it presents a transposed video taken at an earlier time and fetched from a memory.

[0011] According to some demonstrative embodiments of the invention the image control unit may include an input device to receive the user command.

[0012] According to some demonstrative embodiments of the invention, the image control unit may include a storage device to store data of one or more images which may correspond to one or more appearances.

[0013] According to some demonstrative embodiments of the invention, the mirror-display device may be capable of being partitioned into at least first and second simultaneously-displayable frames. The first frame may be selectably operable, for example, both in a mirror mode and a display mode. The second frame may be operable, for example, in a mirror mode.

[0014] According to some demonstrative embodiments of the invention, the imaging device may be capable of capturing three-dimensional images of appearances.

[0015] According to some demonstrative embodiments of the invention, the mirror-display device may be capable of displaying images of appearances at predefined sequences.

[0016] According to some demonstrative embodiments of the invention, the image control unit may be able to selectively enable a user access to images of appearances authorized to the user, e.g., based on user-identifying data received from the user.

[0017] According to some demonstrative embodiments of the invention, the at least one interactive imaging and display system may include two or more interactive imaging and display stations able to communicate over a network. For example, the two or more stations may be able to communicate between each other data representing images of appearances.

[0018] According to some demonstrative embodiments of the invention, the image control unit may control the mirror-display device to display, e.g., during the display mode, one or more images corresponding to the appearances. The one or more images may include, for example, one or more mirrored appearances. The mirrored appearances are obtained by transposing the images or video feed obtained from a camera to generate images and video that, when presented on a monitor, resembles an appearance in a mirror.

[0019] According to some demonstrative embodiments of the invention, a method enabling appearance comparison may comprise using a mirror mode of operation of a mirror-display device capable of being selectably operated in either a mirror or a display mode;

capturing an image corresponding to an appearance of a first trial in front of the mirror-display device; storing the image of the first trial; selecting the display mode of operation of the mirror-display device; and/or retrieving the image of the first trial and displaying the image on the mirror-display device.

[0020] According to further embodiments, methods and apparatus are provided utilizing a camera and a flat screen display to create a convincing mirror appearance.

BRIEF DESCRIPTION OF THE DRAWINGS

[0021] The subject matter regarded as the invention is particularly pointed out and distinctly claimed in the concluding portion of the specification. The invention, however, both as to organization and method of operation, together with features and advantages thereof, may best be understood by reference to the following detailed description when read with the accompanied drawings in which:

[0022] FIG. 1 is a schematic illustration of an interactive system enabling appearance comparison in accordance with some demonstrative embodiments of the invention;

[0023] FIGS. 2A and 2B are schematic illustrations of two, sequential, stages of appearances comparison using an interactive system in accordance with some demonstrative embodiments of the invention; and

[0024] FIGS. 3A, 3B and 3C are schematic illustrations of three, sequential, stages of appearances comparison using an interactive system in accordance with some demonstrative embodiments of the invention; and

[0025] FIG. 4 is a schematic flow chart of a method enabling comparison of one or more user-appearances in accordance with some demonstrative embodiments of the invention.

[0026] FIGS. 5A and 5B schematically illustrate mirror reflection.

[0027] FIG. 6 illustrates an embodiment having one camera or multiple cameras in a vertical array at the user's eye level, so as to obtain low image distortion.

[0028] FIG. 7 is a schematic illustrating what happens when the user approaches the mirror or moves away from it when using a camera mounted above the screen and pointed horizontally.

[0029] FIG. 8 is a schematic illustrating a system wherein the camera is positioned above a monitor screen and is tilted downwards.

Microsoft Ex. 1002 - Page 12 of 451

[0030] FIG. 9 is a block diagram of an embodiment of the invention which performs image transformation to generate an image that mimics a mirror.

[0031] FIGS 10A and 10B are schematics illustrating calibration processes according to embodiments of the invention.

[0032] FIG. 11 is a block diagram illustrating a process according to an embodiment of the invention.

[0033] FIG. 12 is a block diagram illustrating modules and processes to perform the calibration and image transformation according to an embodiment of the invention.

[0034] FIG. 13 illustrates another embodiment, wherein calibration and transformation mapping is performed in the field after installation of the system.

[0035] FIG. 14 illustrates an embodiment for extracting data from the image of camera.

[0036] FIG. 15 illustrates an embodiment wherein stitching of images from n cameras is performed.

[0037] FIG. 16 illustrates an embodiment for presenting the eyes to their fullest, mimicking the user looking directly at himself in the mirror.

[0038] It will be appreciated that for simplicity and clarity of illustration, elements shown in the figures have not necessarily been drawn accurately or to scale. For example, the dimensions of some of the elements may be exaggerated relative to other elements for clarity or several physical components included in one element. Further, where considered appropriate, reference numerals may be repeated among the figures to indicate corresponding or analogous elements. It will be appreciated that these figures present examples of embodiments of the present invention and are not intended to limit the scope of the invention.

DETAILED DESCRIPTION

[0039] In the following description, various aspects of the present invention will be described. For purposes of explanation, specific configurations and details are set forth in order to provide a thorough understanding of the present invention. However, it will be apparent to one skilled in the art that the present invention may be practiced without the specific details presented herein. Furthermore, some features of the invention relying on principles and implementations known in the art may be omitted or simplified to avoid obscuring the present invention.

[0040] Some demonstrative embodiments of the invention may include an interactive system enabling a user to compare one or more appearances, for example, to compare between different appearances, e.g., as described in detail below.

[0041] The term "user-appearance" as used herein may relate to the appearance of a customer while trying a consumer article. The article may include, for example, apparel, such as clothing, shoes, glasses, garments, ties, and the like; an article, e.g., furniture, located in the vicinity of the customer; as well as other items, articles, designs or products such as, for example, cosmetics, headdresses, haircuts, etc. Similarly, embodiments may be employed to technical usage, for example, for Fashion designers that want to see versions of designs, it can be for use by people at home who are creating a lifelong album of family members in real size, etc.

[0042] According to some demonstrative embodiments of the invention, the system may include an imaging device able to capture user-appearances and a mirror-display device, able to operate selectably as a mirror or as a display. When in the mirror mode, the mirror-display device may enable the user to evaluate and/or view a user-appearance of a current trial of a consumer article. As will be described further below, this can be done using live video feed to a flat panel display, wherein the video feed is modified prior to presentation on the screen, such that it emulates a mirror. When in the display mode, the mirror-display device may enable the user to evaluate and/or view one or more user-appearances, e.g., as previously captured by the imaging device, of a previous trial, e.g., as described in detail below.

[0043] Reference is made to FIG. 1, which schematically illustrates an interactive system 100 in accordance with some demonstrative embodiments of the invention.

[0044] According to some demonstrative embodiments of the invention, system 100 may include an interactive imaging and display station 110, which may include an image control unit 120, an imaging device 130 (e.g., a still or video camera), and a mirror-display device 140 (e.g., a flat panel display). Image control unit 120 may include a controller 121, a network interface 122, a storage device 123, an input device 124, all of which elements are described in detail below.

[0045] Aspects of the invention are described herein in the context of demonstrative embodiments of an imaging device, e.g., imaging device 130, a mirror-display device, e.g., mirror-display device 140, and/or an image control unit, e.g., image control unit 120, being separate units of an appearance comparison system, e.g., system 100. However, it will be

appreciated by those skilled in the art that the invention is not limited in this respect, and that according to other embodiments of the invention, the system may include any suitable configuration, combination, and/or arrangement of the imaging device, the mirror-display device, and/or the image control unit. For example, the system may include an integrated module including the mirror-display device, the imaging device and/or the image control unit. For example, the imaging device and/or the image control unit may be implemented as integral part of the mirror-display device.

[0046] According to some demonstrative embodiments of the invention, mirror-display device 140 may be configured and/or may include components and mechanisms allowing mirror-display device 140 to operate selectably in two modes of operation. In a first mode of operation (the "mirror-mode"), mirror-display device 140 may operate as a mirror. In a second mode of operation (the "display mode"), mirror-display device 140 may operate as a display. When mirror-display device 140 operates in the mirror-mode, a user 111 of system 100 may evaluate and/or view a user-appearance of a first trial of a consumer article, as may be reflected by mirror-display device 140 in real time. Imaging device 130 may capture an image of the user-appearance of the first trial. The captured image may be stored, for example, by storage device 123, e.g., as described below. User 111 may then pose in front of mirror-display device 140 trying a second article, and imaging device 130 may capture a second image of the user-appearance of the second trial. The user may be able to view the second article in real time using the mirror-display device 140 set to mirror mode. When the mirror-display device 140 is switched to the display mode, mirror-display 140 may be controlled to display one or more of previously captured images. By virtue of the capability of mirror-display device 140 to operate selectably in the mirror or display mode, user 111 may be able to compare simultaneously or sequentially between the user-appearances of the first and second trials, as described in detail below.

[0047] In some demonstrative embodiments of the invention, e.g., as shown in FIGS. 1, 2A, 2B, 3A, and/or 3B, controller 121 may control device 140 to display, during the display mode of operation, a mirror-image of the appearances. However, it will be appreciated by those of ordinary skill in the art that the invention is not limited in this respect, and that in other embodiments the controller may control device 140 to display, during the display mode of operation, any other image corresponding to the appearance, e.g., a rotated appearance, a revered

appearance, a substantially non-altered, e.g., frontal, appearance, a rendered appearance, and the like, e.g., as described below.

[0048] Device 140 may include any suitable configuration and/or mechanism to enable selectably operating mirror-display device 140 in the first and second modes of operation. For example, in one embodiment device 140 may include an array of liquid crystal (LC) elements, which may change their optical attributes such as, e.g., reflectivity, refractive index and the like, depending on, for example, a voltage applied to the liquid crystals. For example, applying a first voltage may result in changing the optical attributes of the liquid crystals such that mirror-display device 140 may operate as a mirror; and a second voltage may result in changing the optical attributes of the liquid crystals such that mirror-display device 140 may operate as a liquid crystal display.

[0049] In another embodiment of the invention, for example, mirror-display device 140 may include a liquid crystal display (LCD) device embedded in a semi-reflective or one-directional mirror. Accordingly, if the LCD is switched to an inactive mode of operation, mirror-display 140 may passively reflect sufficient light incident thereon to enable the user to view user-appearances at reasonable quality and brightness. In contrast, when the LCD is turned to an active mode of operation, images displayed by the LCD device may be viewed by user 111 because they may be significantly brighter than residual reflections from the surface of the mirror-display. In other embodiments, the system is implemented in a stand-alone computer, without the display itself, such that the purchaser of the system may supply its own display or have configurations where the system is used without screens, but remote controlled by customers mobile devices or tablets, so they can see their appearances in their mobile and remote controlled the recording.

[0050] Also in some cases the camera can be far from the display, for example, in luxury brands they might embed the screen in the wall and put the camera with appropriate lenses in a remote location.

[0051] According to some demonstrative embodiments of the invention, mirror display device 140 may be implemented by a LCD HD ready mirror TV such as, for example, model No. 32PM8822/10 available from Royal Philips Electronics, e.g., as described at the Internet site <http://www.research.philips.com/newscenter/archive/2003/mirrortv.html- >. Such a device may include, for example, a polymer-based organic light-emitting display (OLED). Mirror-display

device 140 may include any other suitable device implementing any suitable display technology. For example, device 140 may include a nano-emissive display (NED); a plasma display panel (PDP); a cathode ray tube display (CRT); a Digital Light Processing (DLP) display; a surface conduction electron emitter display (SED); a Tablet screen; a flat-panel SED; an Organic electronic display; electronic paper; a 3-Dimensional display, e.g., a Hologram display; a thin film resistor (TFT) display; an optical TFT; a Dot Matrix LED screen; an LCD having CCD capabilities, e.g., such that mirror-display 140 may be capable of performing the functionality of imaging device 130; a paintable LCD; a surface-conduction electron-emitter (SED) display; a high definition television (HDTV) display; a rear projector display device, and the like.

[0052] According to some demonstrative embodiments of the invention, imaging device 130 may be adapted to capture one or more appearances from a Field-of-View (FOV) in front of mirror-display device 140. The FOV in front of mirror-display device 140 may include, for example, a field, area, scene, zone, and/or region in front of mirror-display device 140. For example, the FOV may include at least part of a field, area, scene, zone, and/or region captured by mirror-display device 140 when in the mirror mode.

[0053] Although the scope of the present invention is not limited in this respect, imaging device 130 may be or may include, for example, a CCD camera, a video camera, a camera and/or camera set-up enabling capturing of 3D-images, e.g., a stereoscopic camera and the like. A stereoscopic camera may be adapted, for example, to capture a 3-D image of the user-appearance. The stereoscopic camera may include, for example, two lenses having a distance between each other that may correspond to a distance between two human eyes. Accordingly, the stereo camera may be able to simulate human binocular vision, also known as Stereophotography, thereby being able to capture a 3D-image.

[0054] According to some demonstrative embodiments of the invention, station 110 may be a stand alone unit, which may be located at an appearance-comparison area of a desired location, for example, an office, a home, or a retail store, e.g., apparel store.

[0055] According to other demonstrative embodiments of the invention, station 110 may be connected, e.g., via network interface 122, to a network, for example, a network 150, thereby enabling communication between station 110 and one or more other stations affiliated with network 150 such as, for example, station 160 and/or station 170.

Microsoft Ex. 1002 - Page 17 of 451

[0056] According to some demonstrative embodiments of the invention, station 110 may include a network interface 122, which may be adapted to interact with network 150, to send and receive information from other stations in network 150, as described herein. Such information may include but is not limited to data corresponding to images of users captured at various stations of system 100, for example, station 160 and/or 170, as well as identifying information of the users to enable secure access to the system, as described in more detail below. Network 150 may include, for example, a local area network (LAN), a wide area network (WAN), a global communication network, e.g., the Internet, a wireless communication network such as, for example, a wireless LAN (WLAN) communication network, a Bluetooth network, a wireless virtual private network (VPN), a cellular communication network, for example, a 3.sup.rd Generation Partnership Project (3GPP), such as, for example, Frequency Domain Duplexing (FDD) network, a Global System for Mobile communications (GSM) network, a Wideband Code Division Multiple Access (WCDMA) cellular communication network, and the like.

[0057] According to some demonstrative embodiments of the invention, one or more of stations 160 and 170 may be portable devices. Non-limiting examples of such portable devices may include a mobile telephone, a laptop computer, a notebook computer, a mobile computer, a tablet computer, a Personal Communication Systems (PCS) device, Personal Digital Assistants (PDA), a wireless communication device, a PDA device which incorporates a wireless communication device, a cellular telephone, a wireless telephone, a smart card, a token, a memory card, a memory unit, and the like. In some embodiments of the invention, one or more of stations 160 and 170 may be non-portable devices such as, for example, a desktop computer, a television set, a server computer, and the like.

[0058] According to some embodiments of the invention, system 100 may also include a control center 190, which may be connected to stations 110, 160 and/or 170, e.g., via network 150. Control center 190 may receive and store data, which may represent, for example, data and/or images of user-appearances, received from one or more of stations 110, 160 and/or 170.

[0059] According to some embodiments of the invention, stations 110, 160 and/or 170 may be located at different locations such as, for example, different stores of a retail chain. In addition, stations 110, 160 and/or 170 may be located at different locations within a building, e.g., different floors, different sections at the same floor and the like. Such locations may include, for example, clothing stores, shoe stores, points of sale, concept showrooms,

exhibitions, shopping malls, eyewear stores, cosmetic stores, sport clubs, health institutes, fitness centers, airports, train stations, coffee shops, restaurants, hotels, homes, and the like. One or more of stations 110, 160 and 170 may also be used for interactive billboard signs. For example, imaging device 130 may, for example, capture images which may be displayed on a billboard sign (not shown). System 100 may enable user 111 to choose an image to be displayed on the billboard sign out of a plurality of images of, for example, various previous trials of apparel.

[0060] According to some demonstrative embodiments of the invention, images of user appearances may be viewed at different locations. For example, imaging device 130 may capture an image of the first trial. The image may then be sent from network interface 122 via network 150 using signals 151 and 152, for example, to station 160. Accordingly, user 111 may be able to view the image of the first user-appearance at station 160. Therefore, user 111 may be able to view, for example, the user-appearance of the first trial in a first store of a retail store chain, e.g., a store associated with station 110; and may compare the user-appearance of the first trial with a user-appearance of a second trial, which may take place at a second store of the same or an affiliated chain, e.g., a store associated with station 160; and/or at a different time, e.g., one or more hours, days or weeks after the first trial.

[0061] According to another demonstrative embodiment of the invention, imaging device 130 may capture an image of a user-appearance of a first trial, and send the image via network interface 122 over network 150 to control center 190, where the image may be stored for later retrieval. Accordingly, user 111 may gain access to the images of the first trial by accessing any station, e.g., station 160, connected over network 150 with control center 190.

[0062] According to some demonstrative embodiments of the invention, storage device 123 may include, for example, a hard disk drive, a floppy disk drive, a Compact Disk (CD) drive, a CD-ROM drive, a Digital Versatile Disc (DVD) drive, or other suitable removable or non-removable storage units.

[0063] According to some demonstrative embodiments of the invention, controller 121 may be or may include, for example, a Central Processing Unit (CPU), a Digital Signal Processor (DSP), a microprocessor, a controller, a chip, a microchip, an Integrated Circuit (IC), or any other suitable multi-purpose or specific processor or controller, e.g., as are known in the art.

[0064] Input device 124 may include, for example, a keyboard; a remote control; a motion sensor; a pointer device such as, for example, a laser pointer; a mouse; a touch-pad; a

touch screen, which may be embedded, for example, in mirror-display device 140, or may be implemented by any other suitable unit, e.g., separate from device 140; a biometric input device, e.g., a fingerprint scanner, and/or a camera for scanning a face; and/or any other suitable pointing device or input device. Input device 124 may be adapted to receive user-identifying data, for example, to enable, access, e.g., secure access, of user 111 to system 100, as described in detail below.

[0065] According to some demonstrative embodiments of the invention, user 111 may provide user commands to input device 124 for operating the imaging device 130. Input device 124 may include, for example, an interface to enable user 111 of system 100 to define operational parameters of imaging device 130. Controller 121 may receive the inputs from user 111 via signals 131 and control the operation of imaging device 130 accordingly. The user commands may include, for example, commands relating to the timing for capturing an image, the positioning of imaging device 130, e.g., according to an automatic tracking algorithm which may follow, for example, the position of user 111, and/or imaging attributes such as focus, camera position, capturing angle, dynamic range and the like. The user commands may also include commands to define image capturing operating modes of imaging device 130 such as, for example, a video capturing mode, a photographic mode and the like. According to some embodiments of the invention, imaging device 130 may include a sound input device, for example, a microphone and/or a sound output device, for example, a loudspeaker. Accordingly, imaging device may receive audio signals, e.g., voice signals generated by user 111, which may be recorded and stored, e.g., in storage device 123 and reproduce the audio signals through the sound output device. The sound output device may be able to reproduce any other kind of audio signals such as, radio programs, compact disc records and the like.

[0066] According to some demonstrative embodiments of the invention, controller 121 may, for example, set the mode of operation of mirror-display device 140 according to the command received from user 111. For example, if mirror-display device 140 operates in the mirror mode, the user of system 100 may provide input device with a switching command, e.g., by pressing a designated button at input device 124, for switching mirror-display device 140 to the display mode. Controller 121 may receive the input from input device 124 and may control device 140 to switch to the display mode of operation, e.g., using signals 141.

According to some demonstrative embodiments of the invention, imaging device 130 may be mounted in various positions such as, for example, on top, below, or on the side of mirror-display device 140, thereby capturing an image of a user-appearance which may be an image of a given trial of apparel, an image of user 111 with various articles, e.g., furniture and/or posing with different garments and the like. In some embodiments of the invention, imaging device 130 may capture a user-appearance as it appears in mirror-display device 140, i.e., a mirror-image of the user-appearance. In other embodiments, imaging device 130 may capture the appearance, and controller 121 may generate a mirror-image corresponding to the appearance captured by imaging device 130. For example, storage 123 may store instructions that when executed by controller may result in any suitable method or algorithm of rotating, reversing, and/or mirroring the appearance captured by imaging device 130, thereby to generate image data representing rotated, reversed, and/or mirrored image of the image captured by device 130. According to these embodiments, controller 121 may control mirror-display device 140 to display, during the display mode of operation, the rotated, reversed, and/or mirrored image. In other embodiments, controller 121 may control mirror-display device 140 to display, during the display mode of operation, an image corresponding to the image captured by device 130, e.g., a non-mirrored, non-rotated, and/or non-reversed image. In some embodiments, imaging device 130 may not be visible to user 111, may be located behind display device 140, and/or may be embedded in mirror-display device 140, which may be or may include, for example, a LCD-CCD device capable of both displaying and capturing images. For example, in one demonstrative embodiment of the invention, device 140 may include an array, screen or surface, e.g., including liquid crystals, to perform the mirror-display functionality, e.g., as described above, as well as the imaging functionality of imaging device 130, e.g., device 140 may include a mirror-imaging-display device.

[0067] In some demonstrative embodiments of the invention, one or more of stations 110, 160 and/or 170 may not include image capturing device 130; and/or one or more of stations 110, 160 and/or 170 may not include mirror-display 140. For example, a first station of system 100 may include only imaging device 130, and may not include, e.g., mirror-display device 140. User 111 may use the first station to capture the image of the first trial of the user-appearance, e.g., without being able to view at the first station the resultant image of the first trial. User 111

may later view the captured image of the first trial at another station of system 100, which may include mirror-display device 140.

[0068] According to some demonstrative embodiments of the invention, imaging device 130 may be positioned in a manner enabling capturing of an image and/or a sequence of images, videos or the like, of a scene taking place in front of mirror-display device 140. Additionally or alternatively, imaging device 130 may positioned in a manner enabling capturing an image reflected from mirror-display device 140. For example, imaging device 130 may be able to capture an image of user 111 posing in front of mirror-display device 140. While posing in front of mirror-display device 140, user 111 may check his appearance of, e.g., a first fitting trial of clothes. According to an input provided by user 111 at input device 124, imaging device 130 may capture the image of the user-appearance which may be, for example, a given trial of apparel, e.g., a garment and the like. It may be noted that trials by user 111 may also include user 111 engaging with various subjects, which may be located in the vicinity of user 111 such as, furniture, studio set-up and the like. Accordingly, imaging device 130 may capture images of user-appearances of, for example, a first trial, a second trial, etc., and may send the respective captured images to storage device 123 via signals 131 and signals 30. User 111 may be able to retrieve the captured image of, e.g., the first trial, at a later time, e.g., following the second or other subsequent trials, and may compare between the first and second or other trial, e.g., as described below with reference to FIGS. 2A, 2B and 2C.

[0069] According to some demonstrative embodiments of the invention, storage device 123 may be adapted to receive data representing images captured by imaging device 130, and to store images of appearances and, more specifically, user-appearances of, for example, given trials of apparel, captured by imaging device 130. Images of given trials of user-appearances may be retrieved from storage device 123, e.g., by controller 121, and displayed by display 140. User 111 may compare between the displayed images, e.g., as described in detail below.

[0070] According to some demonstrative embodiments of the invention, storage device 123 may include data representing, e.g., software algorithms, requiring and/or verifying user identifying data such as user-ID, password, login-time, bio-metric data and the like to enable secure access to station 110, as described in detail below. For example, controller 121 may control mirror-display device 140 to display images corresponding to an identity of user 111, e.g., based on the identity data provided by user 111. For example, user 111 may provide input

124 with user-identifying input, which may include, for example, a biometric input such as face recognition, a hand print, a finger print, an eye print, voice recognition and the like. The user-identifying input may include any other suitable input, for example, a credit card, a personal identification number (PIN), a password, a smart card, a customer card, a club card, or the like. Controller 121 check, e.g., based on any suitable method and/or algorithm, whether the user-identifying input provided at input device 124 matches with user-identifying data which may be stored, e.g., in storage device 123 or in control center 190. Software having the capability of verifying a biometric input may be, for example, "Active ID FaceVision technology" provided by Geometric Inc. If controller 121 matches the input of user 111 with the stored user-identifying data, controller 121 may enable user 111 to access data representing, for example, images of previous user-appearances of user 111.

[0071] According to some demonstrative embodiments of the invention, storage device 123 may include data representing, e.g., software algorithms enabling additional system features such as, for example, rendering virtual effects on mirror-display device 140. For example, controller 121 may be able to render an image at mirror-display device 140 of user-appearances engaged and/or combined with virtual articles such as, for example, clothes, collections, headdresses, hair cuts, furniture and the like. In addition, controller 121 may be able to render an image at mirror-display device 140 of user-appearances having different body shapes for simulating, e.g., weight loss, weight gain of user 111 and the like. For example, user 111 may choose in a first trial a specific article, such as a suit out of a collection and controller 121 may virtually adjust the collection to an image of user 111 appearing in mirror-display device 140. Controller 121 may store the image of the first trial in storage device 123 and may perform the same step at a second trial. Accordingly, user 111 of system 100 may be able to compare between user-appearances of the first and a second trials of the collection.

[0072] According to some demonstrative embodiments of the invention, controller 121 may provide, for example, image and/or video browsing capabilities, image and/or video replay functions, which capabilities and functions may be predefined by system 100 or may be defined, e.g., on-the-fly, according to one or more user commands received from user 111 via input device 124. For example, controller 121 may be able to retrieve one or more images of previous user-appearances and display the images on mirror-display device 140 at various sequences. For example, images from previous trials may be displayed in a substantially continuous forward,

backwards, or mixed, e.g., randomly-accessible, sequence, and/or may be a stepwise sequence or in any other sequence. Furthermore, images from previous trials may be displayed simultaneously at mirror-display device 140, e.g., as described below. Controller 121 may also be able to delete previously captured user-appearances, limit the amount of data which may be saved in storage device 123 and the like, and may further control a shape, size, color, etc., of the image displayed on mirror-display device 140.

[0073] According to some demonstrative embodiments of the invention, user 111 may use a portable storage device 180 able to store one or more of the captured images. The portable storage device may include any suitable portable storage device, e.g., a smartcard, a disk-on-key device, and the like. User 111 may download, for example, images represented by, e.g., signals 50, of a first trial of user-appearances from storage device 123, e.g., via a storage interface 125 or via any other suitable data connection. User 111 may then upload at a later time the image of, e.g., the first trial, to another location, e.g., a home of user 111, or another station of system 100, e.g., station 170.

[0074] In some embodiments of the invention, station 110 may include more than one mirror-display device or may include a mirror-display device 140, which may be partitioned simultaneously into two frames as described hereinafter with reference to FIGS. 2A and 2B.

[0075] According to some demonstrative embodiments of the invention, controller 121 may record or store, e.g., in storage 123, parameters characterizing user 111. For example, system 100 may include a weighing machine, connected to, e.g., storage device 123 via controller 121. Controller 121 may be able to record, for example, a weight of user 111 during, for example, a trial of an article. Accordingly, user 111 may later retrieve the parameter which may be, for example, the weight of user 111.

[0076] Reference is now made to FIGS. 2A and 2B, which schematically illustrate stages of comparing between appearances using an interactive system in accordance some demonstrative embodiments of the invention.

[0077] According to some demonstrative embodiments of the invention, mirror-display device 140 may be partitioned into two frames, wherein one frame may operate as a mirror frame 192 and another frame 191 may operate selectably as a mirror and as a display frame. As shown in FIG. 2A, user 111 may pose in front of mirror frame 192 a first trial, which may be captured by imaging device 130 and stored in storage device 123. Henceforward, as indicated in FIG. 2B,

user 111 may view simultaneously in frame 191 the image of the user-appearance of the first trial and/or any other user-appearances, e.g., user-appearances stored in storage device 123 and/or received over network 150 (FIG. 1), side-by-side with the normal mirror appearance of a second trial in frame 192, and compare between the first and the second trial.

[0078] Reference is now made to FIGS. 3A, 3B and 3C, which schematically illustrate three, sequential, stages of comparing between appearances using an interactive system in accordance some demonstrative embodiments of the invention.

[0079] As shown in FIG. 3A, the user of system 100 may view a first trial of a user-appearance in mirror-display device 140 operating in its mirror mode. Controller 121 may receive, e.g., from input device 124, a user input, which may include a request to use imaging device 130 for capturing a first trial of the user-appearance. As a result, imaging device 130 may capture an image of the first trial of the user-appearance and storage device 123 may store the captured image.

[0080] As shown in FIG. 3B, user 111 may view a second trial of his user-appearance in mirror-display device 140, which may operate in the mirror mode of operation. Then, when user 111 desires to view a previous appearance, e.g., for comparison, controller 121 may receive a user input via input device 124 requesting to view the first trial. At this point, as shown in FIG. 3C, controller 121 may change the operational mode of mirror-display device 140 to the display mode using signals 141. Controller 121 may also control device 140 to display the first trial. Therefore, by switching between operating modes of mirror-display device 140, user 111 may compare the user-appearance of the second trial with the user-appearance of the first trial and/or any other user-appearances previously stored in storage device 123.

[0081] Reference is now made to FIG. 4, which schematically illustrates a flow-chart of a method enabling comparing between one or more various appearances in accordance with some demonstrative embodiments of the invention. Although the invention is not limited in this respect, one or more operations of the method of FIG. 4 may be performed by one or more elements of system 100 (FIG. 1).

[0082] As indicated at block 410, the method may include, for example, setting the operating mode of a mirror-display device. For example, user 111 (FIG. 1) may initially set the operating mode of mirror-display device 140 (FIG. 1) to the mirror mode. Alternatively, display

140 (FIG. 1) may be designed to operate in the mirror mode by default whenever a new user logs into system 100 (FIG. 1).

[0083] As indicated at block 420, the method may also include, for example, posing in front of the mirror-display device. For example, user 111 (FIG. 1) may pose in front of mirror-display device 140 (FIG. 1) and check the user-appearance of a first trial of, e.g., clothing, shoes and/or any other apparel.

[0084] As indicated at block 430, the method may also include, for example, capturing an image of the user-appearance of the first trial. For example, user 111 (FIG. 1) may provide user command to device 120 (FIG. 1) commanding imaging device 130 (FIG. 1) to capture an image of the user-appearance of the first trial.

[0085] As indicated at block 440, the method may also include, for example, posing in front of the mirror-display device in a different user-appearance. For example, user 111 (FIG. 1) may change one or more items of environment such as, for example, furniture and/or apparel, pose once again in front of mirror-display device 140 which may operate in mirror mode, and view a second user-appearance.

[0086] As indicated at block 450, the method may also include, for example, switching between operating modes of the mirror-display device. For example, user 111 (FIG. 1) may switch mirror-display device 140 (FIG. 1) between the mirror and the display mode. Accordingly, user 111 (FIG. 1) may be able to compare between the user-appearance of the first trial, and/or any other user-appearances, e.g., user-appearances stored in storage device 123 and/or received over network 150 (FIG. 1), and the user-appearance of the second trial.

[0087] According to some demonstrative embodiments of the invention, user 111 (FIG. 1) may indicate, and/or station 110 (FIG. 1) may be able to store, e.g., automatically, for each trial parameters, e.g., including shopping parameters, such as, for example, name of store, address of store, price, time and/or date of trial of apparel, name of salesperson, and the like. User 111 (FIG. 1) may, for example, store the captured images of user-appearances in a removable or portable storage device, e.g., as described above with reference to FIG. 1, and may later review images of user-appearances while being able to ascribe every image to, e.g., a specific store and the like. In addition, user 111 may define, and/or controller 121 (FIG. 1) may be able to generate, and/or store in storage device 123 reminders, for example, alarms about, e.g., discounts, end of season sales and the like.

[0088] We now present discussions relating to embodiment of using an image captured by a camera, e.g., a digital still or video camera, and manipulating the image such that when it is projected on a screen it resembles a mirror image, i.e., an image the user would have seen if the screen was actually a standard mirror.

[0089] Figure 6 is a schematic illustration for an understanding of the following embodiments, which includes a digital screen 640, a camera 630, and a computerized image processor 645, that could create a convincing mirror experience. In an ideal situation, the camera would be able to move on a parallel plane behind the screen, in correspondence with the user's eye location to create a convincing eye-to-eye look experience. However, it is not practical to locate a camera behind a regular screen, simply because it will block the camera's view. In theory, it is possible to overcome this problem by using a semitransparent screen or multiple pinholes with multiple cameras, though it may be too expensive and complex to implement. A simpler solution is to place the camera above the display screen and manipulate the captured image so as to mimic a mirror. Examples for the appropriate manipulations are provided below.

[0090] An adaptive FOV is required in order to compensate for the changes in the distances between the user and the screen, so that the user will see his image at the same size, just like in a mirror. According to one embodiment, this is solved by using the camera's zoom (digital and/or mechanical). Traditional cameras have fixed FOV or mechanically tunable FOV. In order to create an adaptive, i.e., continuously variable, FOV the system needs to manipulate the resolution, or to control the camera zoom and focus in real-time, based on user tracking.

[0091] Additionally, the image needs to be flipped vertically, to support the right-to-left behavior of the mirror. This image transformation may be performed relatively easily by manipulating the pixels addresses of a digital image.

[0092] As explained with respect to Figure 1, the mirror can be smaller than the user and still show a full body reflection. This can be achieved in combination of proper selection of FOV and proper selection of the size screen. The idea is to project an image on the screen, which has a FOV giving the perception that the user sees a reflection at double the distance to the mirror, such that the entire body is visible even if the digital screen is smaller than the height of the user. This is exemplified by images A, B, and C in Figure 6, showing an image of the user captured at different distances to the mirror, but showing the user's body at the same size by, among others, manipulating the FOV. In some embodiments, the image resolution also changes according to

the user's distance to the mirror. For example, for close distances, one embodiment may use an array of cameras and the image manipulator would use stitching to reduce image distortion.

[0093] In order to support three dimensional imaging, the setup will require two cameras at a distance corresponding to the distance between the user's eyes, or one camera with two effective virtual points of view. A convincing 3D experience will also require the implementation of an adaptive closed-loop method that can change the creation of a 3D image as a function of the distance. When the user looks at his reflection in the mirror he sees himself in 3D, although when he approaches the mirror or walks away, the angle from his eyes to his reflection changes, which also changes the depth of the 3D image.

[0094] As explained with reference to Figure 6, it may be too complex or expensive to place the camera behind the display at eye level. Therefore, in the following embodiments a practical method is provided to implement the ideal system described above with a fixed-mounted camera/cameras located at the perimeter of the screen and facing the user. The main challenge is how to compensate for the image distortions adaptively and in real time, so as to create similar user experience as we would get in the ideal setup. Figures 7 and 8 show some examples of the challenges of using the practical setup with the camera placed above the digital screen, i.e., not corresponding to the user's eye level.

[0095] Figure 7 depicts what happens when the user approaches the mirror or moves away from it when using a camera mounted above the screen and pointed horizontally. Assuming the system is calibrated to central dynamic range, when the user is far the image is smaller and higher (scenario C in figure 7) and when the user is closer to the screen (scenario A) the image of the user is larger and the FOV of the camera cuts the image of the user. Additionally, when the user approaches the screen, a projection distortion becomes noticeable, meaning that the user will not feel as if he is looking at himself in a mirror.

[0096] To enable capturing the entire body of the user at any distance, in one embodiment the camera is located at the top of the screen and tilted downwards to allow maximum dynamic range of the user's movement in front of the screen. As depicted in Figure 8, because the camera is tilted downwards, the projection distortion is much larger and noticeable. The closer the user is to the camera, the more distorted his image becomes. The nature of the distortion is mainly projection distortion – the user look shorter and the upper body looks larger. In this configuration the image of the user also got smaller as he was further away from the

screen. On the other hand, the effective/usable FOV of the camera will cover a larger area in front of the screen, and will allow the user to get much closer to the screen and still see an entire body image.

[0097] To enable generating a convincing (augmented) mirror experience from a camera a located in front of the user and in spatial offset from the screen, a computerized method is used to manipulate the captured image prior to its presentation on the screen. The computerized method may operate in real time or not in real time, depending on the operational mode of the screen.

[0098] The computerized method receives as an input the image captured by the camera and performs a transformation of the image to correct the point of view and field of view of the camera to fit with the view point that would occur with a conventional mirror. That is, when the user moves closer or further from the mirror, the view point that would have been reflected in the mirror would have been different from that captured by the camera. Embodiments of the inventive computerized method incorporate an adaptive POV (point of view) and Adaptive FOV modules based on tracking the position of the user.

[0099] Specifically, attempting to solve the virtual mirror problem by only flipping the image vertically as was proposed in the prior art is insufficient to create a mirror experience. When using a camera, once the user gets closer to the camera/screen the user's image becomes larger, and vice versa, as opposed to a conventional mirror where the user will always see himself roughly at the same size with a bit of a different FOV, regardless of his distance from the mirror. In addition, getting closer to the camera introduces image distortion that needs to be corrected in a much more advanced computerized method. Performing an adaptive POV and adaptive FOV prior to displaying the image on the screen results in an image that mimics a reflection of a mirror positioned at the location of the screen. Moreover, to obtain an even more convincing mirror experience, the following features may also be incorporated.

[00100] According to one embodiment, the computerized method further performs dynamic adaptive image stitching of images obtained from a plurality of cameras. According to this embodiment, the system incorporate multiple cameras, e.g., positioned at different locations and/or based on multiple technologies/characteristics, so as to improve the image resolution, accuracy of the image, extend the FOV of a single camera, reduce distortion for different users and different orientation of user, and create a better model for the user body mesh to compensate

the camera's distortion. For example, because the image loses resolution as the user moves away from the screen (fewer pixels capture the user's image), it make sense to optically zoom and refocus the camera. The problem is that it comes at the expense of shrinking the camera's FOV. In order to improve resolution while maintaining FOV, a stitching or dynamic zoom can be implemented concurrently.

[00101] As mentioned in the preceding paragraph, to properly convey a mirror experience, the system may further implement an adaptive optical zoom. The adaptive optical zoom enhances the image/video's quality/resolution, based on distance tracking, i.e., continuously tracking the distance to the user. In addition, it reduces the asymmetric distortion that can occur if the camera is mounted on the side of the screen.

[00102] In order to ensure the accuracy of the image transposition, the platform can be calibrated in discrete pointers and the computerized method can interpolate and extrapolate the correct transformation on different positions in front of the screen. According to one embodiment, the projection distortion can be calculated in an analytical way based on user tracking and camera location. According to another embodiment, the image distortion is measured in front of the screen, and this measurement information is used instead of direct projection calculation.

[00103] The computerized method is optimized to reduce delay as much as possible by using, e.g., parallel computing and/or calculating the transformation per distance beforehand offline, such that when a distance to a user is measure, the mapping transformation is ready upfront. According to another embodiment, a straightforward approach is used without calibration, by analytically creating a projection transformation per user's calculated/measured point of view.

[00104] The following is a high-level description of the modules that together provide the mirror image transformation. The video acquisition module performs: grabbing the video, making video enhancements, camera optimization setting and control to get the best video quality under the available hardware limitations. The geometric measurements module measures or estimates any combination of distance to the user, the user height, identifies eye position and head pose, performs 3D body mash estimation, etc. The camera control module sets the camera for image/video quality and max resolution. In case of multiple cameras, optimization on FOV to get the max resolution will be done based user distance from each camera.

[00105] The geometric transformation module takes the video frame by frame, and the relevant user geometrical position/orientation information, and maps the raw images to the correct location and fills the blind pixel if there are any. For example, the geometric transformation is performed to match the eyes as if the user is looking at the mirror. That is, the computerized method calculates the right geometric transformation to distort the input video such that the user will look at himself and will feel that he is looking at his own eyes. This transformation is useful in other situation as well. For example, when performing video conference using computers, since the camera is positioned above the computer monitor or screen, the resulting image always shows the user looking downwards, since the user is actually looking at the computer monitor and not at the camera. Using the disclosed geometric transformation is such a situation would result in an image of the user as if he was looking at the camera, when in fact he is still looking at the screen. This would result in a more personalized conference environment. In the video conferencing application the geometric correction is similar to the mirror application though flipping image left right is not required.

[00106] The mapping transformation module can be implemented using various embodiments. According to one embodiment, a scaling approach is used, wherein geometric assumptions are used to make scaling correction per distance to the user, so as to match the size of the image that the user would see in a mirror. According to another embodiment, an image projection and scaling approach is used, wherein based on user distance, spatial offset and eyes location per distance and offset, projection transformation error between user/user-eyes and camera location is calculated or measured. Additional transformation can be made to correct optic distortion.

[00107] According to yet another embodiment, a registration approach is used, which has been shown to provide rather accurate results. According to this approach, the transformation is pre-programmed based on offline true registration technique of raw image from offset/projected/back oriented camera to an image that was taken in front of the user when the user eyes are staring at the camera. Reference image can be generated from one multiple cameras with stitching. For example, a reference camera will be located in a similar height and distance that will reduce most optic distortion, e.g., at eye level and 2-3m from the user. The registration will yield the best transformation to match the eyes and the full body based on multiple pointers. In one example, multiple pointers, e.g., white dotes, on a 2D or 3D calibration target, e.g.,

human/doll target will form a two-dimensional grid around central body. For example, circular stickers can be placed on the legs, on the chest, on the shoulders, on the eyes, etc. To improve accuracy, this registration can be repeated for multiple user locations/positions in front of the screen to account for, e.g., multiple spatial offsets from broadside, multiple heights, multiple distances, etc. For each location, the best mapping possible is created, assuming multiple distortions (projection, barrel, fisheye, or any combination, etc.) that can be corrected with multiple registration techniques (e.g., projection, affine transformation, similarity, polynomial, or any combination, etc.).

[00108] The above-described embodiments can be implemented in conjunction with the following further enhancement. Image stitching can be used with multiple cameras that are located so as to improve resolution quality, to minimize distortion from single camera, or to increasing field of view. Image stitching element will be integrated stitching based on user geometric location. Each camera will have its own transformation correction since the offset relative to the virtual eye location will be different. The multiple cameras can also be used to generate three dimensional view to improve the user experience.

[00109] A three-dimensional infrared (3D IR) image can also be generated. Such an image can be used to generate an accurate virtual model of the user, which can then be used to allow API for virtual dressing and augmented reality. Using augment reality, one can change the background, insert objects, perform virtual dressing of different clothes, etc. This may also be used to analyze the user body language and link it with the augmented reality applications, virtual dressing applications, gaming, video conferences, etc.

[00110] Since the system records the image, either still or video, various analytics can be performed on the images. For example, video analytics and/or store analytics can be used to collect information on the user or the store performance, e.g., how many times he smiled, did he enjoy the experience, estimated age, sex, ethnic origin, etc. Various inputs can be used for behavioral analysis platform that can help to integrate the eComerce into the real try-on experience, or as add on to any other application. For example, the system can analyze the user try-on item/items and linked it with the shop inventory, 3D printing, and the eComerce web, eComerce stylist, social network, etc.

[00111] Reference is now made to Figure 9, which is a block diagram of an embodiment of the invention which performs image transformation to generate an image that mimics a mirror.

The various modules of the system illustrated in Figure 9 can be implemented on programmed general purpose computer, DSP, CPU, GPU, Camera DSP/ASIC, Screen DSP/ASIC, standalone computing device, FPGA card, DSP device, ASIC, cloud parallel computing, etc.

[00112] Block 930 represents one or more cameras 1:n, which stream the images to the image grabber module 932. Block 930 may include still and/or video cameras, IR camera, two and/or three-dimensional camera arrangements. A range finder, e.g., electroacoustic or electronic range finder, may also be included.

[00113] The image grabber module 932 captures the streamed images from block 930, and may apply filters to improve the image quality. Additionally, it may perform cropping or image resizing as needed for optimization of the image. If multiple cameras are used, the grabber module 932 applies image stitching as needed for better quality or wider effective field of view.

[00114] The trigger event module 960 is a parallel process that can get its input directly from the image grabber module 932, although it can also get the images after the eyes-match module 934. The input can be optimized in size, bandwidth and rate to perform the required functionality. Examples of elements that can reside in the trigger event module 960 include the following. Identify that a user is standing in-front of the camera 930, e.g., based on background subtracting and changes in a predefine zone, pattern recognition, etc. Measure the distance to the user by, e.g., correlation between stereo cameras, 3D IR camera, etc. According to another embodiment the distance to the user is estimated using a single camera measurement, by making some geometrical assumption, e.g., the user is roughly standing in front of the mirror and on a flat floor, so that the distance, the user height or the user theoretical point of view in a mirror, for example, can be deduce from measuring the location of the user's shoes and the user's special offset from the screen broadside.

[00115] A face recognition module may be included in order to ease the user interface identification. In operation, after registration the platform should save the information for each user, and once the user is recognized by the system, the system can upload the user's data, make updates, suggest items, etc. With face recognition the user doesn't have to identify himself, which saves time and enhances ease the use. The face recognition can be the trigger event for automatic recording of the apparences. In some embodiments, the length of the recording of each session is pre-defined and may start once the face recognition is successful. In other

embodiments remote control technics can be used as trigger, such as a function in a mobile application or dedicated tablet/mobile/other remote control devices.

[00116] Other elements that can reside in the trigger event module 960 include video analytics (to create meaningful feedback, e.g., estimate age, sex, mood, other popular items, etc.), item recognition (so that the system can easily link the try-on items into the store, enhance inventory and eComerce platform for better recommendation and faster checkout and inventory planning), and gesture identification (for seamless user control without an input device).

[00117] The eyes-match transformation module 934 performs the image transformation prior to display on screen(s) 940. It gets as an input the image from the grabber module 932, and in addition, may receive the calculated distance or distance and height or actual user point of view. The eyes-match transformation module 934 calculates the required mapping. The required mapping can be calculated directly based calculation of the projection angle difference between camera and user theoretical point of view, e.g., matching the required image scale and positioning. Alternatively, a true-match approach that utilizes factory calibration process can be used to create a very accurate transformation between the camera and calculated point of view at discreet locations in-front of the mirror. Additionally, the base images and transformation that created per other one or more parameters, for example, distance, height, pose, measurements done in the factory, or real time when the user is standing in front of the screen, may also be used.

[00118] Based on user distance or the combination of user distance and eyes point of view, the eyes-match transformation module 934 creates interpolation of the transformation at any location in front of the camera. Since the distance of various parts of the user's body to the camera is not uniform, the projection distortion creates effect where closer body parts, like the head, are imaged by more pixels than far body parts, like the legs. Consequently, the user appears with shorted legs and large head, i.e., closer body parts appear larger and further body parts appear smaller. This mapping is not a linear, i.e., each pixel represent different area length and width (dx,dy), so pixel filling/under sampling decimation will have to be performed to maintain the axis proportion. Filling approach can be any interpolation (near, linear, cubic, polynomial etc.) or more complex filling from different camera projection. For example, cameras from above and below the screen can complement and better estimate the missing pixels or the correct eye orientation. Additional option is to perform some of the analysis in direct optic

(special lens/prism) that will correct most of the projection distortion and will improve the resolution. Some of the resizing issue that affects the quality can also be compensate optically by mechanical zoom.

[00119] An optional virtual dressing/augmented reality module 936 can be included to enhance the user's experience. Module 936 gets its input from the EyesMatch module 934 or from the recording module 938. The EyesMatch module 934 performs a transformation of the image and will be explained in further details below. The EyesMatch module 934 can be used in various applications other than the mirror, such as for video cams, video conferences, etc. In addition, module 936 can get input elements to render from the CPU that maintains an active link with the inventory, a database, a 3D printing, eCommerce data base etc. Using the input data, module 936 can render digital images to be merged with the transposed image. For example, module 936 can be used to change an item's color based on actual try on and available inventory or user customization. It should be appreciated that module 936's rendering is different from regular virtual dressing, in that module 936 performs the rendering on an item that is imaged while on the user's body. Thus, for example, rendering the item in different color does not change the physical appearance of the item that the user is wearing, but only its color. Consequently, the user can feel the actual item on his body, see how it actually effects and changes his body shape and appearance, view actual folds and stretches, etc. Module 936 can also be used to add accessory to actual user's image or add true virtual dressing capability to the platform. Similarly, module 936 can be used to augment the background to change or create different environments to match the item the user wear, e.g., beach background for bathing suit, night club background for night dress, etc.

[00120] The video/stills recording module 938 receives its video/stills from the camera grabber 932 directly, from the EyesMatch module 934, or from the virtual dressing augmented reality module 936. In addition, it gets control signals from the control module 962, that indicates when to start/stop recording, what information to store per user, and on what video/stills to process off line additional transformation/augment, reality/virtual dressing/quality enhancement, etc. The method that can be used for the recording without loading the system resources (CPU/BUS/GPU) can include encoding/decoding capabilities in the GPU cards.

[00121] In addition to having a local copy of the video/images in the Mirror Memory (station), the images can be automatically replicated to a Cloud Service and can be encoded automatically for any necessary size.

[00122] The recording process can also modify the frame rate, the compression, the cropping, /change the formats, and modify video and color effects.

[00123] Other than recording, optionally the system can provide live streaming of the Mirror video. For example, the system will be able to show on the web in real-time streaming from any mirror, meaning that any device will be able to watch the streaming, including mirror to mirror.

[00124] Control module 962 controls the operation of all of the other modules. The control module 962 configures all of the hardware and software elements in the system, including the cameras 930, screen 940, DSP, etc. Control module 962 includes an interface, serving as a link between the local station and the cloud base eComerce 950, other web applications 952, smartphone applications 954, etc. The information that will be recorded on the recording module 938 can be delivered to the user immediately by wireless signals/IR/wire, or can be delivered by the user authorization to a cloud base application like Facebook, Google, or other, or to the company server that can be linked to the eComerce application.

[00125] The factory calibration module 964 is utilized when the transformation relies on actual image transforms. The camera to screen geometry orientation can be determined/measured in the factory, or can be measured in the field, and offsets can match the calibration with the factory condition. In addition, correction can be matched to height or angle of the mirror setup relative to the floor. The calibration process may be implemented as follows. The first step is to create a mirror reference of how the image should look like in the mirror at different discrete distances, special orientation, different eyes reflection location (i.e., theoretical point of view). The reference can be taken in multiple ways:

1. As illustrated in Figure 10A, the camera 14 is located at the location of the "supposed" mirror and at the user's eye height or close to it. A user or a doll with pointers (e.g., white sticker dots 10) is positioned at a distance from the camera, such that it will eliminate most of the camera distortion when looking at the camera. The scaling of the image can be matched and cropped to represent true size of a supposed reflection at a mirror, or slightly smaller. That

is, the generated reference image should match the true size of the user on a mirror placed at the camera location, or smaller to fit the screen if preferred (depend on the size of the screen).

2. In Figure 10B, a user or a doll with the pointers is positioned in-front of a conventional mirror 12. The camera is positioned at the location of the user and located at eye level of the user, and images the reflection in the mirror. The reference image can also be taken with an array of cameras, e.g., in front of the user in a vertical line, to eliminate distortion. Thereafter, the multiple images are stitched to get a uniform image with high resolution and low distortion. Google glasses can also be an option for calibration in this scenario. The user/target with the camera will take a picture of himself in-front of a regular mirror. Since the FOV is fixed, the only thing that needs to be done is resize the image for true size.

[00126] Once the reference image is obtained, another image is taken by placing the camera at its actual service location, e.g., above the screen, which will be referred to herein as the actual image. Then a registration of the reference and actual image is performed, by matching the pointers on the actual image to those of the references image. From the registration information, the transformation that can best bring the distort image to the right eyes and body orientation is extracted. Also, based on actual installation geometry in the field, offsets or correction to the transformation can be added. Based on user distance and eyes point of view, an interpolation of the transformation at any location in front of the camera can be create.

[00127] Figure 11 is a block diagram illustrating a process according to an embodiment of the invention, which can be used in the systems described herein. The process begins at 1100, with a factory calibration procedure, which can be implemented using the followings steps as one example. A calibration target is selected, e.g., a doll, a user, a board etc. Target pointers are then placed on the target, for example stickers 10 illustrated in Figure 10A. The camera is then mounted at its service location, e.g., above the screen and tilted down as illustrated in Figure 8, and is set to capture the maximum range. Snap shots of the target are taken at multiple locations (i.e., distances, heights, literation offsets, etc.). On the other hand, for simplicity, taking images at multiple distances along the central virtual line in front of the screen would suffice. One or more reference images are then obtained by, for example, either of the methods shown in Figures 10A or 10B. As one example, the camera is positioned at eye level at the same location of the screen. Then one or more snapshots of the same target are taken, using the same allocated pointers. If only one image is taken, it should be taken at a reasonable distance to avoid camera

distortion. If multiple reference images are taken, they should be taken at multiple distances so as to capture the small changes occurring when user approaches the mirror. Note, however, that if multiple target and multiple reference images are obtained, it would be advisable to take them at the same distances and same positions, to generate better transformations. The reference images can be resized to represent a true size on the screen, i.e., to mimic the size that would be reflected in a mirror positioned at the location of the screen.

[00128] Once the target and reference images are obtained, the distorted target images that were taken from the tilted camera are registered to the reference image(s) using the pointers, so as to represent how the user would appear at a mirror positioned at the location of the screen. The output of the registration is a transformation operator, e.g., a set of pointers, each having two coordinates: one in the input image and one in the reference image. Various transformations can be tested over multiple target and reference images. For example, multiple distortion functions can be applied to get the best matching performance. The principle functions would be projection, resize, XY translation (offset) and left-to-right flip. The best transformation combination is selected and mapping transformation is created for each calibration point. This mapping transformation is the factory calibration according to which live images in the field would be transformed to mimic a mirror image. It should be appreciated that the mapping may include different transformations for each pixel or each section of the live image, so as to provide the best representation of a mirror reflection.

[00129] As can be understood, step 1100 can be implemented in the factory, prior to shipping the system. On the other hand, this procedure may also be done in the field, especially when the camera and the screen are provided as separate elements, such that in different situations the camera may be positioned at different locations with respect to the screen. In such circumstances, it may be beneficial to supply the system with a calibration target, e.g., a doll (3d target) or board with calibration markings (2d target) , such that the user may be able to perform the calibration in the field using a standard target. The system would then be pre-programmed to perform the calibration process and generate the transformation mapping in the field.

[00130] Once the system is installed in its service location, the process is at step 1105, wherein live image or video of a user is obtained and grabbed by, e.g., a frame grabber. At the same time, the user's location is measured, such that the user's point of view is determined. This can be done using IR measurement technology, or using available sensors, such as, e.g.,

Kinect®, available from Microsoft®. At step 1115, if needed, optionally a scaling factor is applied to match the screen size and user height.

[00131] At step 1120 the appropriate transformation mapping is selected, or a standard factory calibrated mapping is interpolated to create the correct mapping for the user's particular location in front of the screen. The transformation mapping is then applied by the EyesMatch module to the live video. In this context, the term "live" also refers to a video feed that was grabbed by a frame grabber and may reside in a buffer prior to being sent to the monitor screen for presentation. Also, if needed due to the transformation, at step 1125 missing pixels are filled in by interpolation technique. At step 1130 the image is sent from the buffer to the screen to be displayed. It should be appreciated, that due to fast processors available commercially, steps 1105-1130 can be performed in real time, such that the user cannot perceive any delay in presenting the image on the screen, which is referred to herein as "real time" or "live" presentation.

[00132] The EyesMatch module can be used to provide a more natural environment that more conform to daily interaction. For example, when making a video call using a PC, such as by using Skype®, since the camera is normally positioned above the monitor, the caller often seems to look away from the camera, since the caller is actually looking at the screen. This provides an unnatural conversation, since the callers are not looking at each other when talking. The EyesMatch module can be used in such application to apply a transformation such that the image displayed on the monitor appears as if the caller was looking directly at the video cam, even if the caller was actually looking at the screen, and thus away from the video cam. The transformation can be done either at the sender or receiver's computer. For example, a user using Skype® may have EyesMatch module installed on his computer, such that whenever the video cam is activated for a video conference, the EyesMatch module intercepts the signal from the video cam and applies the transformation prior to allowing the video to stream to the other user via the Skype application. When the other user receives the video signal, it has already been transposed such that the other user sees the image as if the caller is looking directly at the video cam. The same can be implemented is standard video conference systems, such as WebEx, Polycom, etc.

[00133] Figure 12 is a block diagram illustrating modules and processes to perform the calibration and image transformation according to an embodiment of the invention. Block 1230

represent the image acquisition module, which may include one or more still or video cameras, an IR camera or distance measurement sensor, a 3D camera arrangement, etc. Module 1232 controls the camera optimization settings, e.g., to obtain the proper FOV, image the proper zone in front of the screen, set focus and/or resolution, etc. Module 1260 is the trigger event module, which can be used to identify the presence of a user in front of the screen and start the image acquisition and transformation process. At other times, the system can be set at idle, showing only a background image on the screen until a user is detected.

[00134] Brace 1360 encompasses the calibration procedure, which will be described herein for a system configured for a field installation wherein the camera 1230 is positioned above the display screen 1240, as also exemplified in Figure 1. The calibration 1260 can be performed in the factory prior to shipment or in the field after installation. At 1261 a target with pointers is positioned and at 1262 one set of reference images are obtained (using, e.g., camera at eye level and looking forward) and a corresponding set of input images are obtained (e.g., using the camera at its field installation position above the screen and pointing downwards. At 1263 pointers from each input image are matched to corresponding pointers in corresponding reference image. So as to generate transformation vectors. Depending on the quality of mirror representation sought, optionally the vectors corresponding to areas around the eyes of a user are fine-tuned at 1264.

[00135] Using the matching of the pointers of the input images to the reference images, at 1265 the transformation parameters that lead to the best image matching can be determined and selected. The parameters that can be used for the transformation include the following. A highly effective transformation parameter is a tilt transformation. Tilt transformation corrects the distortion in the image caused by the camera being tilted downwards. The tilt transformation modifies an input image taken with the camera looking downwards and transforms the image to appear as if the camera was pointed straight horizontally (Video engine can also correct azimuth error). Another transformation parameter is elevation translation. The elevation spatial translation transformation linearly modifies offset in an image taken with a camera positioned externally to the screen, e.g., above the screen, and transforms the image to appear as if the image was taken from the screen location at the user's eyes level (match the eye height to the image in the screen height) Horizontal translation can also be apply to correct missalignments between the camera and the center of the screen). Another important transformation for

mimicking mirror is scale. As explained above, in an actual mirror reflection the user sees very little change in body image size as the user gets closer to the mirror. Conversely, in a camera image the size changes considerably with distance to the camera. A scale transformation reduces the effect of size change with distance to the screen, so that the user sees almost constant size of himself in the screen, regardless of distance to the screen. Depending on the position and FOV of the camera, an x-y translation of the image may also be required.

[00136] In practice, it has been shown that performing tilt, elevation, and scale translations provides a rather convincing image that only needs to be right-to-left reversed to very effectively mimic a mirror reflection. For further improvements, one may also use barrel-effect transformation and fish-eye transformation. Additionally, one may add depth perception to the projected image by adding lighting and shadowing, either artificially by operating on the intensity and/or hue of the image pixels, or physically by controlling illumination elements such as LED's strategically position about the screen or the user. Moreover, a 3D effect can be created either with the use of 3D glasses or using glasses-free 3D technology. In glasses-free 3D technology different sets of images are projected to each eye. Since in the embodiments described the distance to the user and the location of the user's eye are measured or estimated, it makes it easier to project a 3D image to the user by projecting different sets of the images to each of the user's eyes.

[00137] At step 1266 a transformation mapping is generated and stored. This transformation mapping will be used at 1234 for transforming live video feeds from imaging 1230, utilizing the estimated distance to the user. Depending on the transformation mapping operation, pixel filling may be needed. For example, using a camera on top of the screen and tilted downwards would require tilt and elevation transformations which would provide an image that can be enhanced using pixel filling. This can be done at 1237, and the resulting image would be presented on the screen at 1240. Applying the transformation and pixel filling onto live video feed can be easily done in real time using the appropriate processing capacity.

[00138] Figure 13 illustrates another embodiment, wherein calibration and transformation mapping is performed in the field after installation of the system. In the example of Figure 13, camera 14 is positioned above video screen 12 and is tilted downwards. The camera 14 and screen 12 are in communication with and are controlled by controller 18. The user is provided with an input device 16, which may be in communication with controller 18 using wired or

wireless technology. The user stands at an appropriate location, e.g., 2-3 meters from the screen 12, and enables the calibration process by, e.g., entering a "calibrate" command from the remote input device 16. During the calibration process, a live video stream is fed from camera 14 to the controller 18, and the controller "flips" the image about a central vertical axis (left to right) prior to displaying it on screen 12. Using the input device, the user acts on the various transformation functions. For example, the input device may include input buttons for correcting tilt, elevation and scale, as schematically illustrated in Figure 13. The user's input commands are transmitted to the controller 18, which then applies the transformations in real time to the video feed, such that the image is changing in real time in front of the user. The user may change the amount of each transformation function until the user sees a convincing image in the screen, at which point the user may press an input button indicating that calibration is completed. The controller 18 then saves the appropriate calibration parameters and uses these transformation parameters for all future live video feeds.

[00139] Another feature illustrated in Figure 13 is distance calculation. Since the position and tilt of the camera 14 with respect to the screen 12 are known (e.g., due to fixed bracket attaching the camera to the top of the screen), the image captured by the camera 14 can be used for triangulation and distance calculation. For example, when a user appears in a frame of a live video stream captured by camera 14, triangulation to the tips of the user's shoes can be performed in order to calculate the user's distance to the screen 12. This operation can be done every fixed number, n, of frames, such that the user's distance from the screen can be continuously updated to capture user's movement. The background can be updated once there is no user in front of the mirror – adaptive background method.

[00140] A further feature illustrated in Figure 13 is the use of lighting to create depth and/or atmosphere. Specifically, several light sources 17, e.g., LED arrays, can be placed at different locations about the screen 12, and be controlled by controller 18. The light sources 17 can be operated so as to create more depth in the image, e.g., adding shadows and brightly illuminated areas. The light sources 17 can be of different colors, so as to improve the existing lighting and create the appropriate overall "temperature" of the displayed image. The light sources can also be tuned according to the distance to the user, so as to create consistent image and remove artifacts created by the store's illumination. Alternatively, or additionally, color and lighting changes can be done by the controller directly on the digital image received from the

camera 14. For example, color transformation can be used to enhance the mirror appearance of the image, e.g., operate on parameters providing an image that is: glossy, crisp, sharp, mat, metallic, etc. The controller 18 can also add virtual spot of lights and/or shadows on the image to create more depth to the image. Also, an anti-reflecting coating is provided on the front of the screen so as to remove and reduce reflections that are normally associated with flat panel displays. The LED Array can be connected to light sensor, and/or to light temperature sensor, and can be predefined to stay in particular levels of light and light temperatures, and will adjust automatically.

[00141] According to further embodiments, 3D imaging is implemented with two cameras at a distance D between each other. Distance D is calculated as an average distance between human eyes, generally referred to as interpupillary distance (IPD), which for adults is around 54–68 mm. The transformation will be calculate from registration of image obtained from the input camera at a distance D with an image obtained from two reference (base) cameras at a spatial distance that is also similar to the distance between to user eyes. The base for registration can be taken using a Kinect® or any IR 3D camera. Google glasses can also be an option for calibration, wherein the user/target wearing the Google glasses will take a picture of himself in front of a regular mirror. Since the FOV is fixed, the only thing that needs to be done is resize the image for true size. An image transformation module, such as controller 18, can also apply image resize for zoom in/out to allow the user to fit the image to the screen or to focus on some part.

[00142] As can be understood, while some of the above embodiments relate to building the transformation mapping by registering images or other empirical methods, alternatively direct calculations of the distortion between camera and theoretical user point of view can be performed based on analytics. Using analytics voids the need for any registration procedure. Instead, analytical mapping transformation is created to correct for the distortions.

[00143] Yet another feature illustrate in Figure 13 is the use of the Internet or the cloud for providing services relating to the transformation and mirror presentations. For example, according to one embodiment, the transformation can actually be performed in the cloud, if a sufficiently fast connection exists. In such a case, the feed from the camera 14 can be fed to server 181, which applies the transformation and sends it back to controller 18 for display on monitor screen 11. According to another embodiment, the images from camera 14 or transformed images from camera 14 can be stored in the cloud and streamed to devices, such as

smartphone 183, tablet 187, and another monitor screen 189, such as a flat panel TV. This can be done in real time while the user is trying an outfit, such that the user can share the experience and get input from others at remote locations. Also, once the user leaves the store, the user can have access to all the images taken by using a smartphone, tables, PC, etc. Note that for ease of user interface, as shown in monitor 189 of Figure 13, thumbnail images of various tries can be displayed together with the current image, to enable the user to choose among views.

[00144] Figure 14 illustrates an embodiment for extracting data from the image of camera 1430. The trigger event module 1450 detects the presence of a user and activates the process for extracting the data. A camera optimization module 1432 can be used to control the camera to obtain the best image for the data extraction. In this embodiment, when the camera 1430 is located above the screen and pointed down, it can see the user's shoes from, e.g., 1m to 4m from the screen. However, since the camera is pointed down and the shoes are at a high distance from the camera compared with the user's head, the distortion is at the maximum. With the transformation mapping discussed above a compelling distortion improvement is achieved at all distances.

[00145] Additionally, according to this embodiment, the image of the user is separated from the background at 1462. At 1464 the central mass is calculated by multiplying the binary image of the user only by index matrix, and then taking the mean of the pixels index. Also, the min. body pixel below central mass (J,k) is determined by opening a window around k (central mass) and finding the lower active index – which can be assumed to represent the edge of the shoes. At 1468 the user's height is calculated by finding the top of the head and, based on the distance camera resolution, FOV, and the camera geometric tilt, the user's height is estimated.

[00146] Figure 15 illustrates an embodiment wherein stitching of images from n cameras is performed. Stitching is particularly beneficial for improving the image resolution and FoV when the user is approaching closer to the screen. In the embodiment of Figure 15, the live feeds 1530, 1532, of n cameras, 1:n, are stitched together. Trigger event module 1560 may be used to trigger stitching when a user is detected in front of the screen. Also, distance measurement may be supplied, either a single value representing an average distance to the user, or multiple values, e.g., one distance value for each camera. Conversely, or in addition, multiple distance values may be provided to indicate different distances of different body part.

[00147] Each camera may undergo separate camera optimization, 1533, 1536, and the feeds from each camera would go through a different geometrical transformation, 1560, 1562, since the location and orientation of the cameras are different relative to the user point of view, 1564, 1562. Overlay decision 1570 is the decision element to determine where will be best to perform the stitching. If we are dealing with scenario with two cameras one located above and one below the screen, the overlay decision will indicate the index of the best cut. Since we have distance measurement constantly, it is possible to maintain the stitching line almost fixed once user approach the mirror. For maximum performance the stitching 1572 needs to be optimized based on the user's distance from the cameras. Smoothing 1574 is needed to filter out the lines that may be generated at the intersections of different images from different cameras. The images from different cameras would be slightly different due to differences in absolute quality and in lightning, and due to different distortion correction for each camera. Interleaving between the images on multiple rows can be used to ease the lighting affect. The stitched image is output at 1576.

[00148] In the above described embodiments, the transformation mapping corrected the image obtained by the cameras and provided an image that mimics an image that would have reflected from a mirror. The following embodiment, illustrated in Figure 16, improves the quality of the eyes' presentation. The idea behind this embodiment is to override the eyes zone, or just the eyes, with modified pixels that will create the feeling of broadside view – i.e., presenting the eyes to their fullest mimicking the user looking directly at himself in the mirror. As can be understood, the user would be looking directly at himself projected in the screen, but since the camera is not positioned at eye level pointing horizontally, the user's eye as captured by the camera would not be seen looking straight ahead. The embodiment of Figure 16 corrects this problem.

[00149] The majority of the elements in Figure 16 are similar to that of Figure 12 and have the same reference, except that it is in the 16xx series. These elements will not be described here again. Instead, attention is directed to element 1680, which is responsible for the eyes correction. Since the scaling has already been correct by the prior elements, what needs to be done at this stage is to fix and/or reconstruct the internal eyes elements, e.g., pupil, iris, etc., so as to present the proper image.

[00150] Module 1680 first locates the eyes in the image and makes sure that the user does indeed look at the screen. The information for this step and for the corrections can be deduced from historical images, estimations for regular statistical eyes proportions, or actual measurement when the user looks directly at the camera or once the user is standing far enough from the screen where the distortion is relatively low after the transformation mapping. If the user is found to be looking at the screen, the pixels corresponding to the eyes area are either transformed or actually replaced by pixels that position the iris and pupil at the center of the eye, looking forward. Also, the sclera may be enlarged, to mimic straight-on view, especially if the camera is positioned above and pointed downwards.

[00151] Another feature that may be implemented in any of the above described embodiments is the frequency of transformation parameter update. That is, at times the user may prefer a stable image when he is standing stationary in front of the screen that mimics the mirror. Having the transformation mapping engine change while user is stationary may create an uncomfortable feeling. On the other hand, when the user is moving faster toward or backward from the screen, it may be fine to update the transformation parameters faster. Accordingly, according to this feature, multiple behavior zones are established. According to one embodiment, the behavior zones are set according to distance only. For example, when the user is moving more than a set distance amount, the video engine is updated. According to one embodiment, if the user moved an amount of less than, say 25cm, the transformation mapping is performed at a lower speed, say every x seconds, while if the user moved more than 25cm, the transformation mapping is updating the parameters at a second, faster speed. According to another embodiment, the zones are set according to the user's movement speed. For example, if it is determined that the user is moving less than x cm/s, then a first transform updating frequency is implements, while if the user moves faster, a second, faster updating frequency is used.

[00152] Thus, as can be understood from the above, while a real time video engine update may be used to image the user, the presentation transformation on the monitor screen may not be necessarily changing in real time, depending on the user's behavior. For example, is the user is relatively stationary or moves very slow, transformed parameters can vary in a semi-real time. Then, when the user starts to move faster or a large distance, the video engine may be updated more frequently.

Microsoft Ex. 1002 - Page 46 of 451

[00153] It should be appreciated that the embodiments described above may be implemented using a digital (e.g., video) camera and a monitor, wherein the images from the camera are fed to a processor. The processor applies the transformation mapping to the images and display images in either a display mode or a mirror mode on the monitor. From the above description it should be appreciated that the mirror mode may be implemented by displaying on the monitor the live video feed, as modified by the transformation mapping. That is, in mirror mode the image that is being displayed on the monitor is an image/video of the user taken in real time. Conversely, in display mode the image that is being displayed is an image/video obtained in the past and taken from storage. The stored images may be either the raw images as fed from the camera or already transformed images. In either case, the prior images that are being displayed in a display mode are transformed images. Therefore, if the stored images are the raw images, the processor applies the transformation mapping prior to displaying the images on the monitor.

[00154] Whether the system operates in a display or mirror mode can be considered as a temporal issue: during mirror mode, the image that is being shown on the monitor is a transformed image of what the camera sees at that particular moment (or at a *de minimis* or unnoticeable earlier time), while during display mode the image that is being shown is a transformed image of what the camera or other camera saw earlier and is different than what the camera sees now. This issue also relates to perception: during mirror mode, since the monitor shows a transformed image of what the camera sees now, the user observing the monitor has the perception that he is looking at a mirror, while during the display mode the user observing the monitor has the perception of observing a video of events that took place in the past.

[00155] It should be appreciated that the system can be implemented separate and irrespective of the monitor screen. For example, in some locations (e.g., dressing room), only the monitor screen may be installed, without any camera. The monitor is configured to communicate with the system so as to download and display stored images. The user may interact with the monitor to view prior images taken, e.g., to compare with current outfit. As another example, all of the images taken can be uploaded to the cloud, such that a user may view the images on a PC or mobile device, such as using an app on a tablet.

[00156] As can be understood from the above description, various embodiments of the invention provide an image transformation apparatus that comprises an image input port for

receiving digital images from a camera; a transposed image output port for outputting transposed images to be displayed on a monitor or stored in memory; and a transposition module that is programmed to receive images from the input port and apply a transformation to the images, wherein the transformation includes at least flipping the image about a vertical axis so as to reverse right and left sides of the image; applying a transformation mapping to the image to modify the image such that it appears to mimic a reflection of a mirror; resizing the image to reduce variations caused by changes in object's distance to the camera. In other embodiments, a program is provided that when operated on a computer causes the computer to transpose a digital image obtained from a camera, such that the transposed image resembles a reflection from a mirror, the transposition including at least flipping the image about a vertical axis so as to reverse right and left sides of the image; applying a transformation mapping to the image to modify the image such that it appears to mimic a reflection of a mirror; resizing the image to reduce variations caused by changes in object's distance to the camera. The program can be operated in any general purpose computer, such as a server, a PC, a tablet, a smartphone, etc.

[00157] According to further embodiments, a system is provided which enables a user to view self image on a digital screen by having the digital screen project an image mimicking a mirror image. The system includes a digital camera generating a stream of images of the user; a controller having an image input port to receive the stream of images from the camera and applying a transformation to the images to generate transformed images mimicking a reflection of the user in a mirror; the controller having an output port for outputting a stream of transposed images to be displayed on a monitor; and a storage facility to store the transformed images. The controller further having an Internet connection for uploading the stream of transposed images to the cloud. The system further having clients enabling download and viewing of the transformed images from the cloud.

[00158] In various embodiments, a controller applies a transformation to a stream of images, which includes: flipping the image about a vertical axis so as to reverse right and left sides of the image; applying a transformation mapping to the image to modify the image such that it appears to mimic a reflection of a mirror; and resizing the image to reduce variations caused by changes in object's distance to the camera. The mapping essentially reassigns new addresses to each pixel of the original image. The transformation mapping renders an image appearing to have been taken from a camera positioned at eye-level height and pointing

horizontally. The transformation mapping comprises at least a tilt transformation and an elevation transformation, wherein a tilt transformation transforms the image to resemble tilting of the camera and the elevation transformation transforms the image to resemble changing the elevation of the camera.

[00159] The transformation mapping can be one that includes angle, tilt, azimuth, scale, spatial translation (i.e., elevation linear offset or horizontal offset) etc. The final transformation is a matrix multiplication of the individual transformation to generate the individual distortions.

[00160] In other embodiments a system is provided for enhancing video conferencing or video calling. The system includes a transformation engine to transform a stream of images taken from a video camera positioned about a periphery of a monitor screen, such that images of a user looking directly at the screen portray a user not looking directly at the camera. The transformation engine receives the stream of images and transforms the images so as to provide images showing the user looking directly at the camera. The transformation includes any combination of correction for angle, tilt, azimuth, scale, spatial translation (i.e., elevation linear offset or horizontal offset), etc. The transformation may also include override the eyes zone, or just the eyes, with modified pixels that will create the feeling of broadside view – i.e., presenting the eyes to their fullest mimicking the user looking directly at the camera.

[00161] In various implementations, the method further comprises calculating distance to a user appearing in the image by tracking the distance between the user's eyes or the head size, and scaling the image accordingly. For example, according to one embodiment, the system is programmed with an expected distance between the user's eyes, i.e., interpupillary distance (IPD), at an average distance from the camera. The 95 percentile adult male in the USA has an IPD of 70 mm, while for females it is 65mm. When a user is sensed in front of the camera, the system may first determine whether it is a male or female, or simply go directly the the distance measurement program and use an average IPD number, e.g., 68mm. For the range measurement, the system identifies the pupils in the image, and scale the image so as to match the expected IPD. As video images continue to stream, the system scales the image to maintain the IPD constant and matching the expected IPD. In this manner, when the user moves away or closer to the camera, the size of the user in the image projected on the monitor screen would remain about the same, thus mimicking a reflection on a mirror. As can be understood, the system can use other standard measurements, such as distance between ears, etc., but using the eyes would make

it simpler since the system can recognize the eyes pretty easily. However, if the user wears shades, the system may have to resort to other measurements based on o0ther body parts. This switch can be done dynamically, i.e., if the system finds the eyes, it uses IPD, but if not, it falls back to other body parts.

[00162] Also, effect filters can be applied, such as lighting filter effect, reflective texture effect, color spectrum filter to create metallic feeling, etc. Similarly, the camera's shutter timing, sensor gain, whitebalance, and any of their combinations can be controlled to modify the resulting image. In various embodiments, these parameters are controlled based on a dynamic region of interest (Dynamic RIO), such that the changes applied to the parameters relate only to a selected region in the image, and not the entire image. For example, the parameters can be modified and updated based on the distance to the user and limited to an ROI which is a window around the user. For example, the user's image can be separated from the background, and thhe parameters applied only to the pixels belonging to the user's image.

[00163] In further implementations, enhanced real time video effect is implemented by, e.g., recording a video with a high resolution camera at a first frame rate, and manipulating the display in a higher frame rate so as to smooth the video. Additionally, the background of the received video stream can be replaced with an artificial background stoered in the system. Additional video processing can be used to add or change color or texture of accessory or other element in the image. Also, for video conferencing and other applications the transformation can be performed without vertical flipping of the image.

[00164] While certain features of the invention have been illustrated and described herein, many modifications, substitutions, changes, and equivalents may occur to those skilled in the art. It is, therefore, to be understood that the appended claims are intended to cover all such modifications and changes as fall within the true spirit of the invention.

CLAIMS

1. A method for operating a system having a monitor, a camera, and a processor, so as to display a mirror-mimicking image on the monitor, by performing the non-ordered steps comprising:

obtaining a digital image from a camera;

flipping the image about a vertical axis so as to reverse right and left sides of the image;

applying a transformation mapping to the image to modify the image such that it appears to mimic a reflection of a mirror;

resizing the image to reduce variations caused by changes in object's distance to the camera;

displaying the image on the monitor after performing the flipping, transformation mapping, and resizing.

2. The method of claim 1, wherein the transformation mapping renders an image appearing to have been taken from a camera positioned at eye-level height and pointing horizontally.

3. The method of claim 1, wherein the transformation mapping comprises at least a tilt transformation and an elevation transformation.

4. The method of claim 3, wherein the tilt transformation modifies an input image taken with a non-horizontally pointing camera and transforming the image to appear as if the camera was pointed straight horizontally.

5. The method of claim 3, wherein the elevation transformation modifies an input image taken with a camera positioned at arbitrary height and transforming the image to appear as if the camera was positioned at a user's eye level.

6. The method of claim 1, wherein the step of resizing the image is performed integral to the step of applying the transformation mapping.

7. The method of claim 1, further comprising the steps:

obtaining a reference image;

performing registration of the digital image with the reference image;

using data obtained from the registration to generate the transformation mapping.

8. The method of claim 1, further comprising applying a translation transformation to move the image within display area of the monitor.

9. The method of claim 1, further comprising changing illumination intensity of individual or groups of pixels of the monitor, so as to enhance shading or illumination in the image.

10. The method of claim 1, further comprising applying at least one of a barrel-effect transformation and a fish-eye transformation.

11. The method of claim 1, further comprising:

determining distance to a user appearing in the image; and,

varying resolution of the image according to the distance.

12. The method of claim 1, further comprising a step of pixel filling, wherein pixel image is extrapolated into empty pixels left after applying the transformation mapping.

13. The method of claim 1, further comprising the steps:

obtaining a second digital image from a second camera;

flipping the second image about a vertical axis so as to reverse right and left sides of the second image;

applying a transformation mapping to the second image to modify the second image such that it appears to mimic a reflection of a mirror;

resizing the second image to reduce variations caused by changes in object's distance to the second camera;

stitching the image and the second image after performing the flipping, transformation mapping, and resizing, to thereby obtain a stitched image;

displaying the stitched image on the monitor.

14. The method of claim 13, wherein field of views of the camera and of the second camera overlap, and further comprising the step of overlay decision to determine best location in overlapping parts of the field of views to perform the stitching.

15. The method of claim 14, further comprising a smoothing operation to correct artifacts caused by the step of stitching.

16. The method of claim 1, further comprising the steps:

obtaining a second digital image from a second camera;

flipping the second image about a vertical axis so as to reverse right and left sides of the second image;

applying a transformation mapping to the second image to modify the second image such that it appears to mimic a reflection of a mirror;

resizing the second image to reduce variations caused by changes in object's distance to the second camera;

displaying the image and the second image after performing the flipping, transformation mapping, and resizing, to thereby obtain a three-dimensional image on the monitor.

17. The method of claim 1, wherein the non-ordered steps are performed on a series of images of a live video feed from the camera.

18. The method of claim 17, further comprising:

determining distance to a user appearing in the live video feed; and,

varying rate at which the non-ordered steps are performed on the series of images according to the distance.

19. The method of claim 17, storing the live video feed in a digital storage device and selectively operating the system in one of a mirror mode or display mode, wherein during mirror mode displaying on the monitor transformed images of what the camera sees at that particular moment while during display mode displaying on the monitor a transformed images of what the camera saw in the past and obtained from the digital storage device.

20. The method of claim 1, further comprising calculating distance to a user appearing in the image by identifying user's shoes and triangulating to the shoes.

Abstract

Systems, devices and methods enabling appearance comparison. The system includes at least one interactive imaging and display station. The station includes a mirror-display device capable of selectably operating in either or both a mirror mode or a display mode; an imaging device to capture one or more appearances appearing in a field of view in front of the mirror-display device; and/or an image control unit to select the mode of operation of the mirror-display device according to a user command.

Microsoft Ex. 1002 - Page 55 of 451

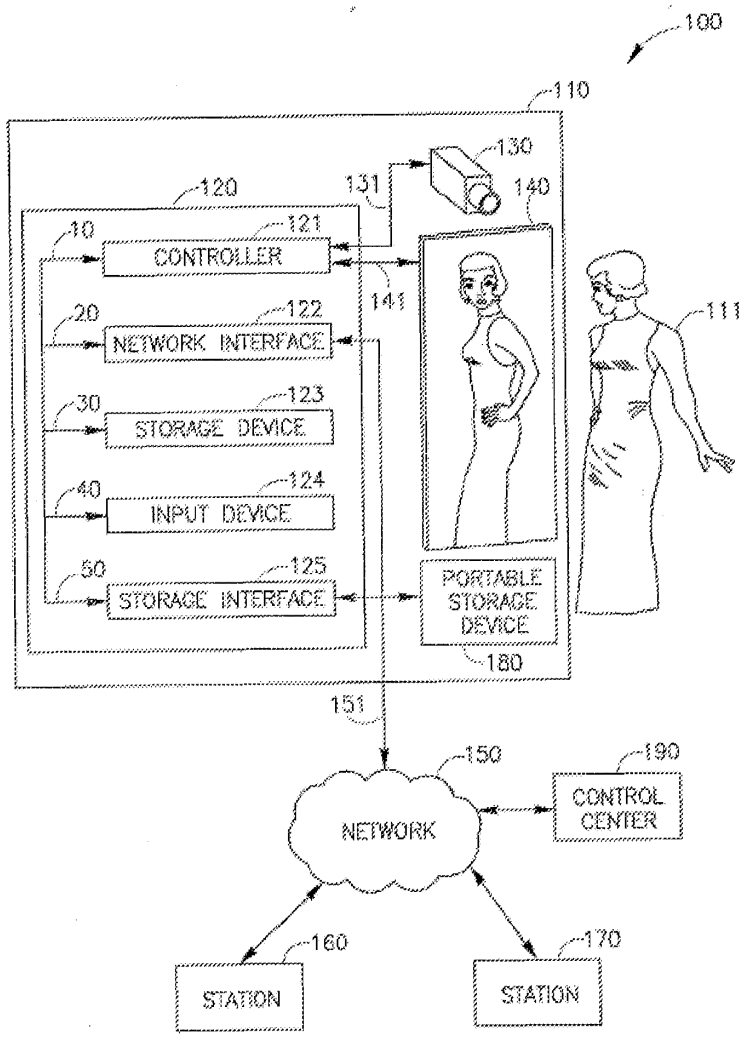

FIG.1

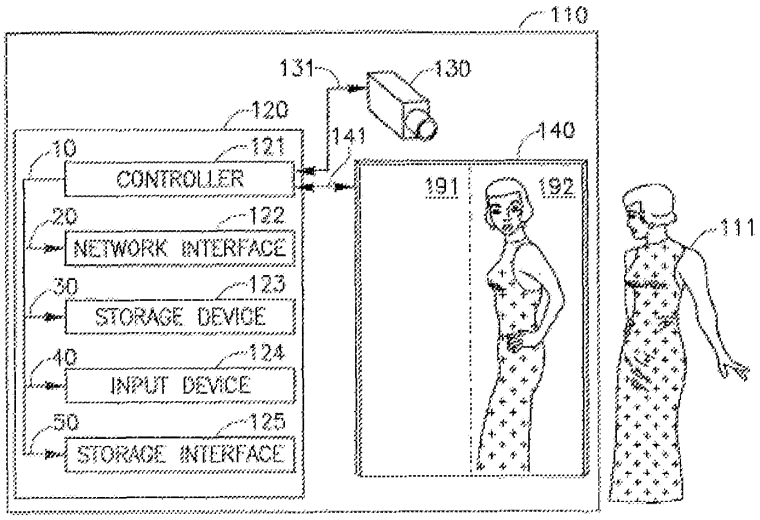

FIG.2A

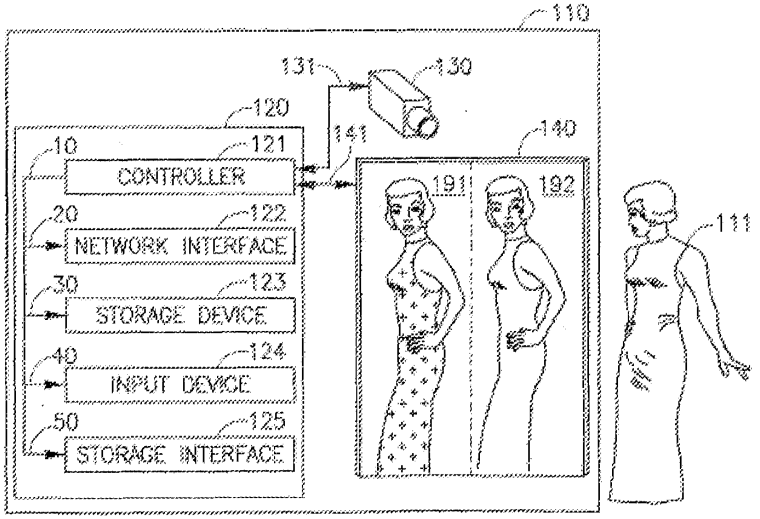

FIG.2B

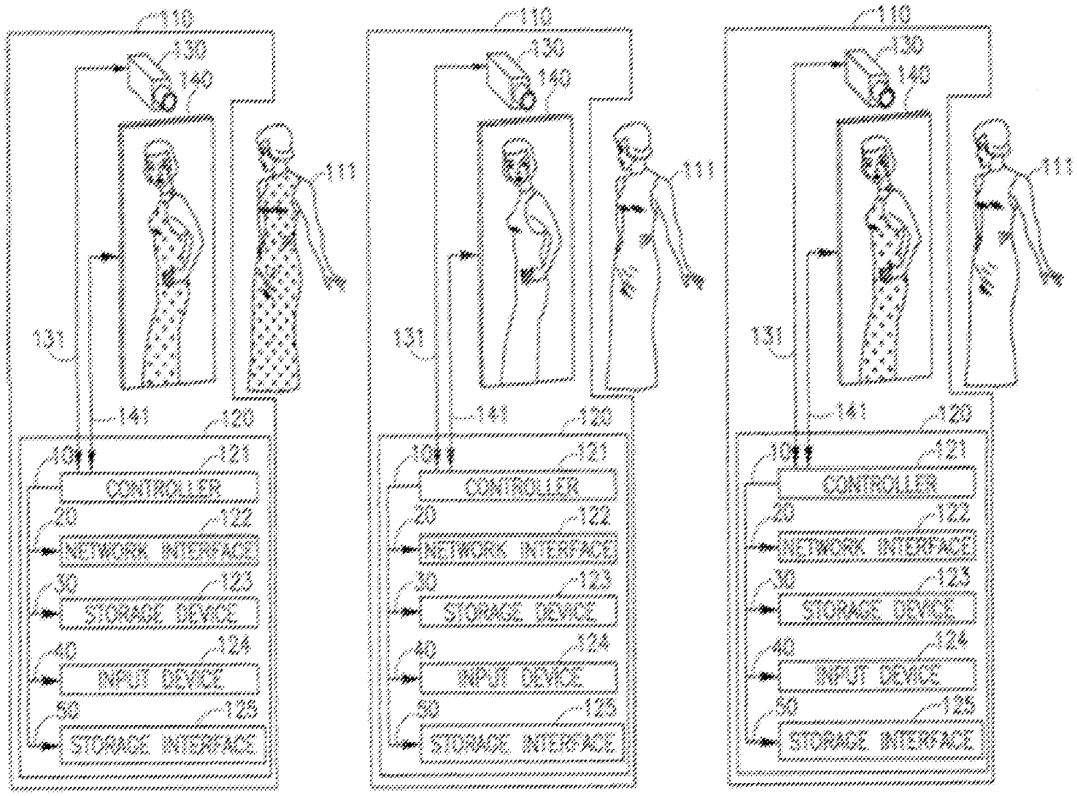

FIG.3A FIG.3B FIG.3C

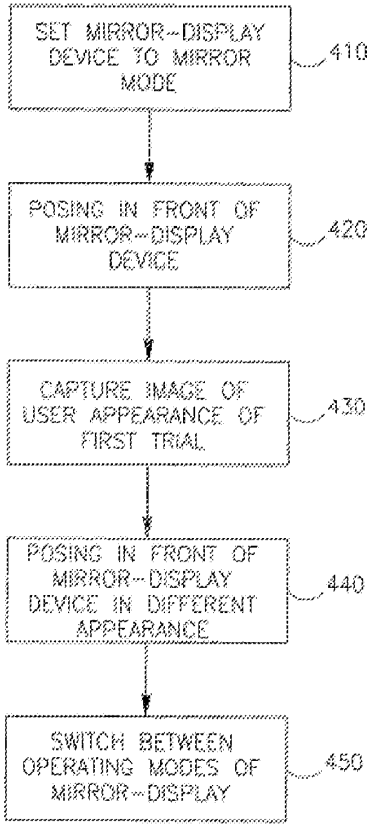

FIG.4

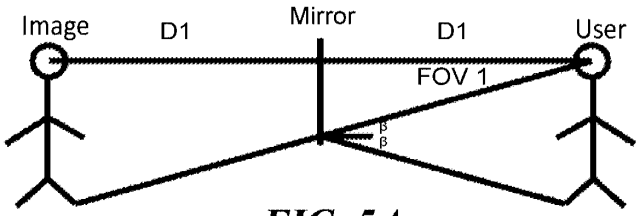

FIG. 5A

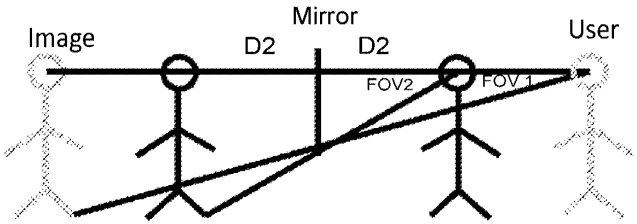

FIG. 5B

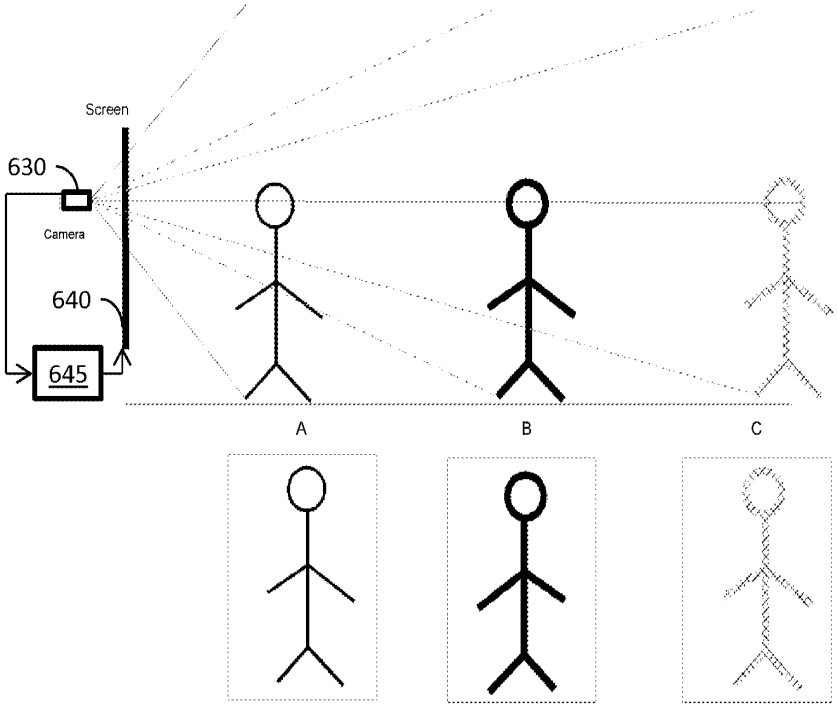

FIG. 6

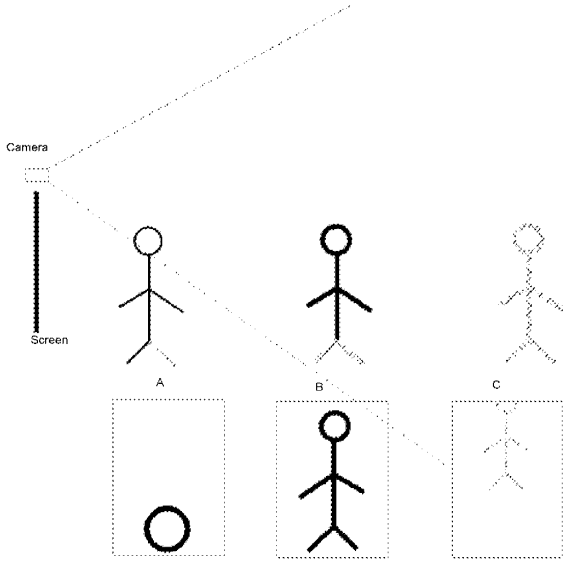

FIG. 7

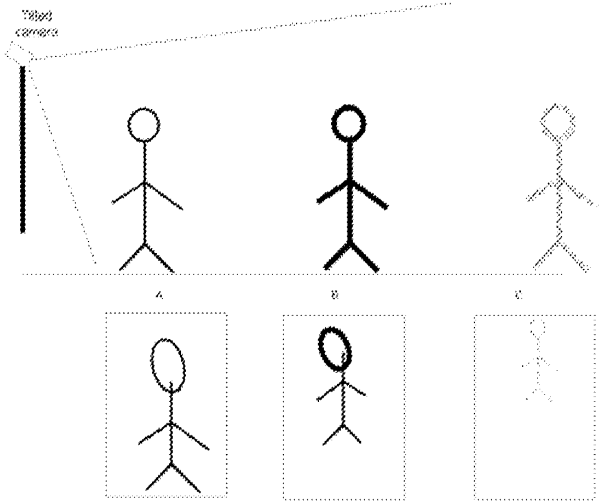

FIG. 8

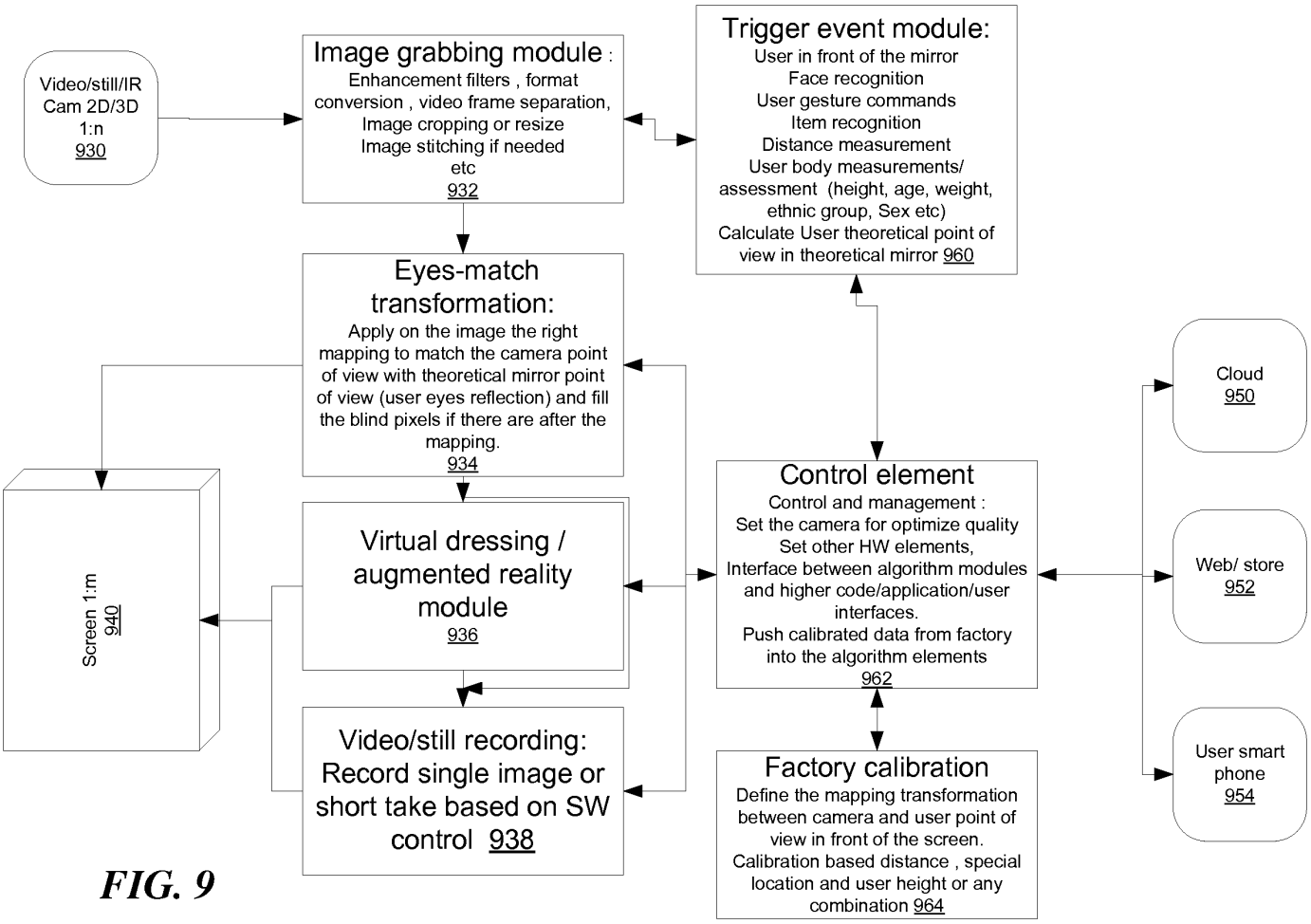
Video/still/IR Cam 2D/3D 1:n 930
Image grabbing module : Enhancement filters , format conversion , video frame separation, Image cropping or resize Image stitching if needed etc 932
Trigger event module: User in front of the mirror Face recognition User gesture commands Item recognition Distance measurement User body measurements/ assessment (height, age, weight, ethnic group, Sex etc) Calculate User theoretical point of view in theoretical mirror 960
Eyes-match transformation: Apply on the image the right mapping to match the camera point of view with theoretical mirror point of view (user eyes reflection) and fill the blind pixels if there are after the mapping. 934
Screen 1:m 940
Virtual dressing / augmented reality module 936
Video/still recording: Record single image or short take based on SW control 938
Control element Control and management : Set the camera for optimize quality Set other HW elements, Interface between algorithm modules and higher code/application/user interfaces. Push calibrated data from factory into the algorithm elements 962
Factory calibration Define the mapping transformation between camera and user point of view in front of the screen. Calibration based distance , special location and user height or any combination 964
Cloud 950
Web/ store 952
User smart phone 954

FIG. 9

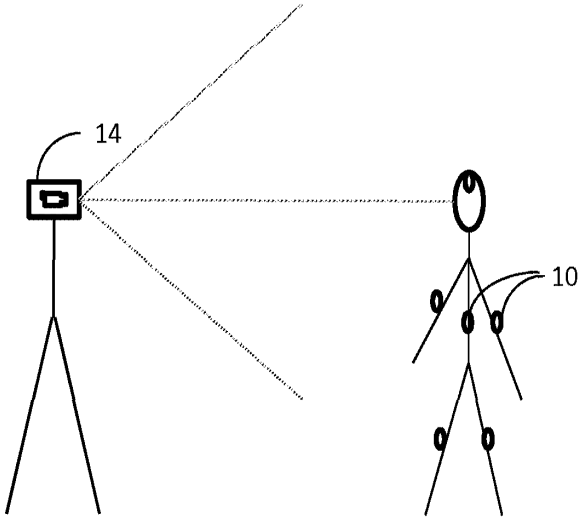

FIG. 10A

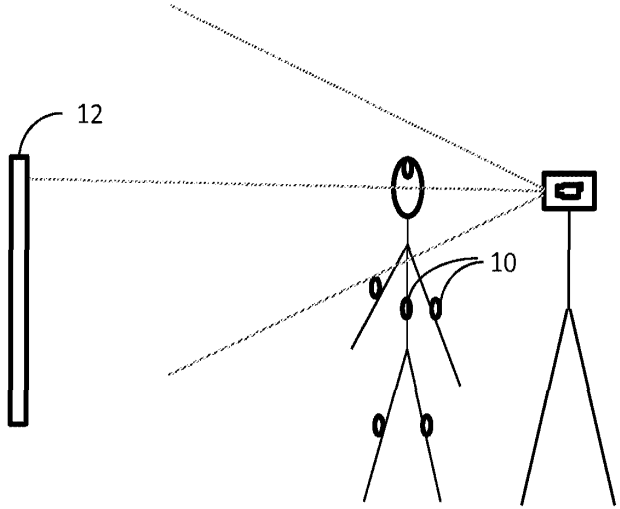

FIG. 10B

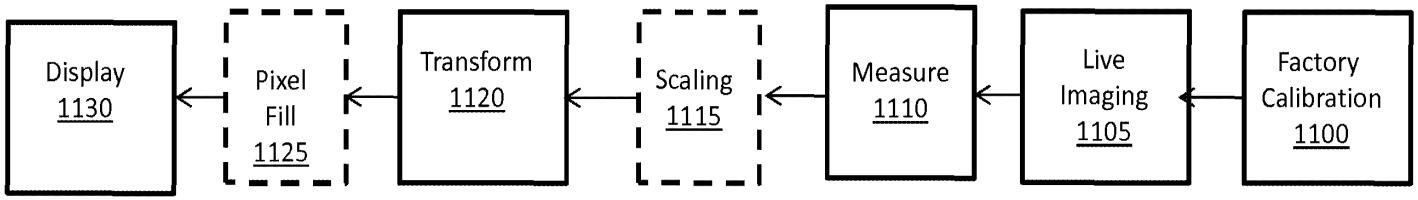

FIG. 11

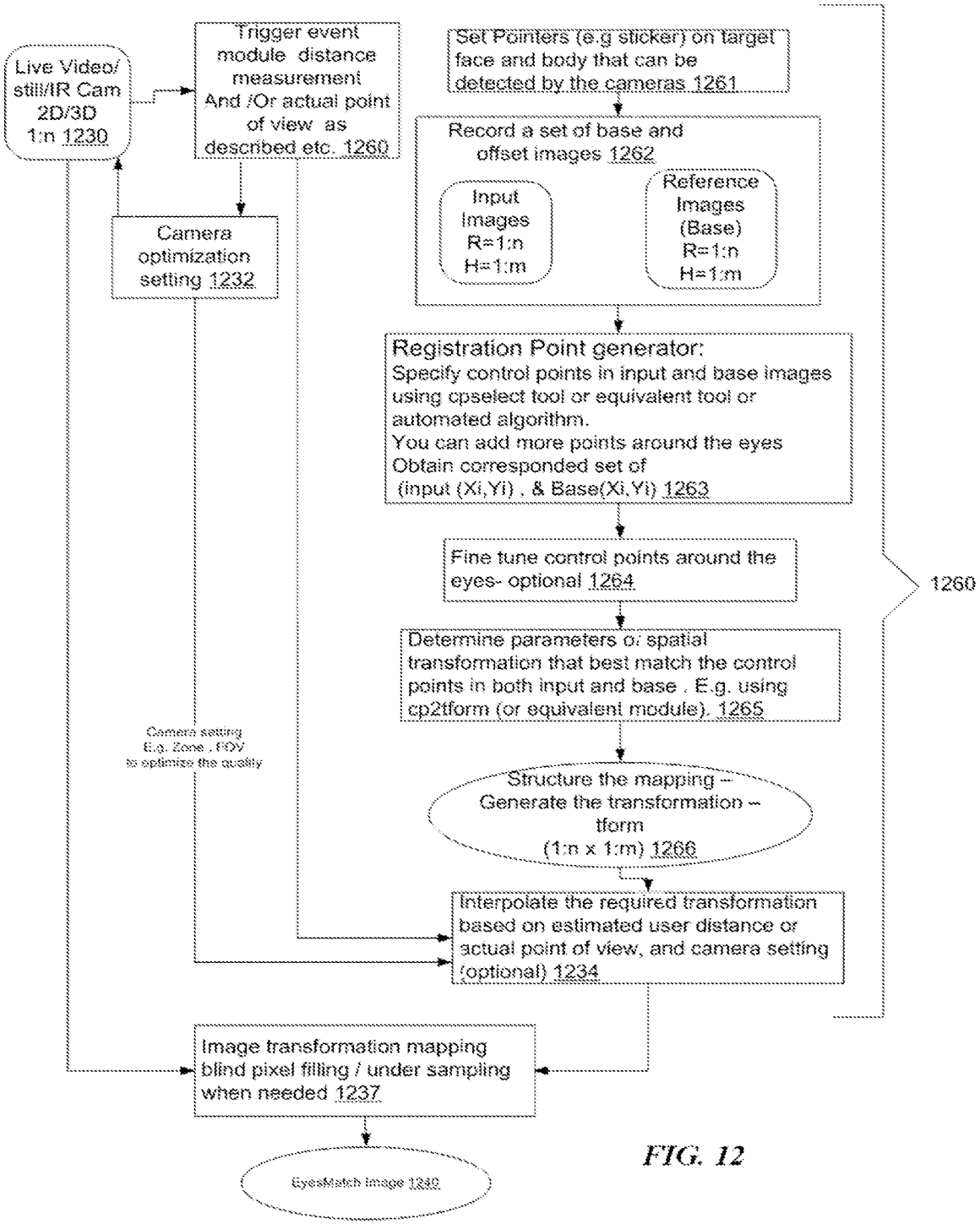
Live Video/ still/IR Cam 2D/3D 1:n 1230
Trigger event module distance measurement And /Or actual point of view as described etc. 1260
Set Pointers (e.g sticker) on target face and body that can be detected by the cameras 1261
Record a set of base and offset images 1262
Input Images R=1:n H=1:m
Reference Images (Base) R=1:n H=1:m
Camera optimization setting 1232
Registration Point generator:
Specify control points in input and base images using cpselect tool or equivalent tool or automated algorithm.
You can add more points around the eyes
Obtain corresponded set of
(input (Xi,Yi) , & Base(Xi,Yi) 1263
Fine tune control points around the eyes- optional 1264
1260
Determine parameters of spatial transformation that best match the control points in both input and base . E.g. using cp2tform (or equivalent module). 1265
Camera setting E.g. Zoom , FOV to optimize the quality
Structure the mapping – Generate the transformation – tform (1:n x 1:m) 1266
Interpolate the required transformation based on estimated user distance or actual point of view, and camera setting (optional) 1234
Image transformation mapping blind pixel filling / under sampling when needed 1237
EyesMatch Image 1240

FIG. 12

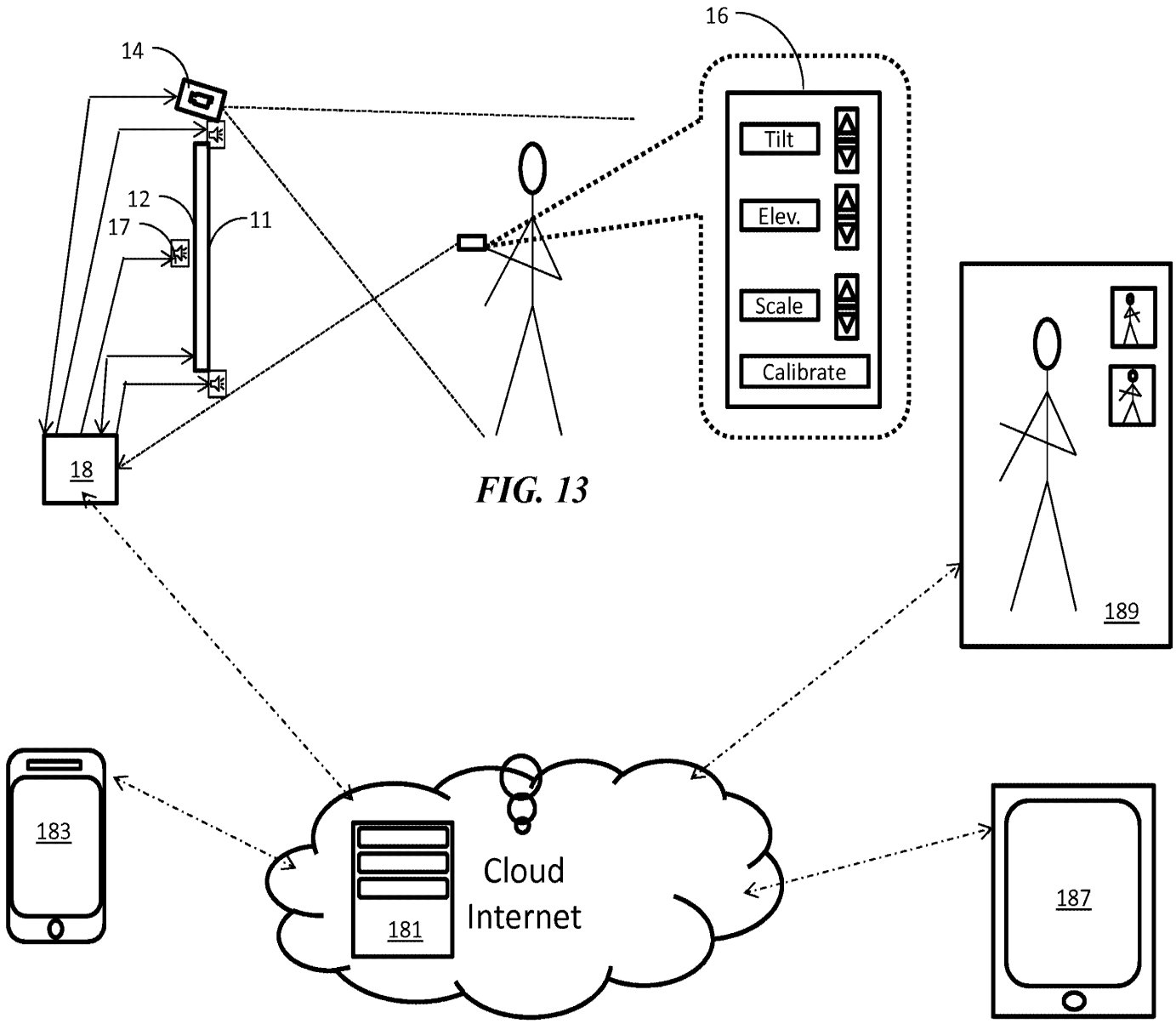
14
16
12
17
11
Tilt
Elev.
Scale
Calibrate
18
189
183
Cloud
Internet
181
187

FIG. 13

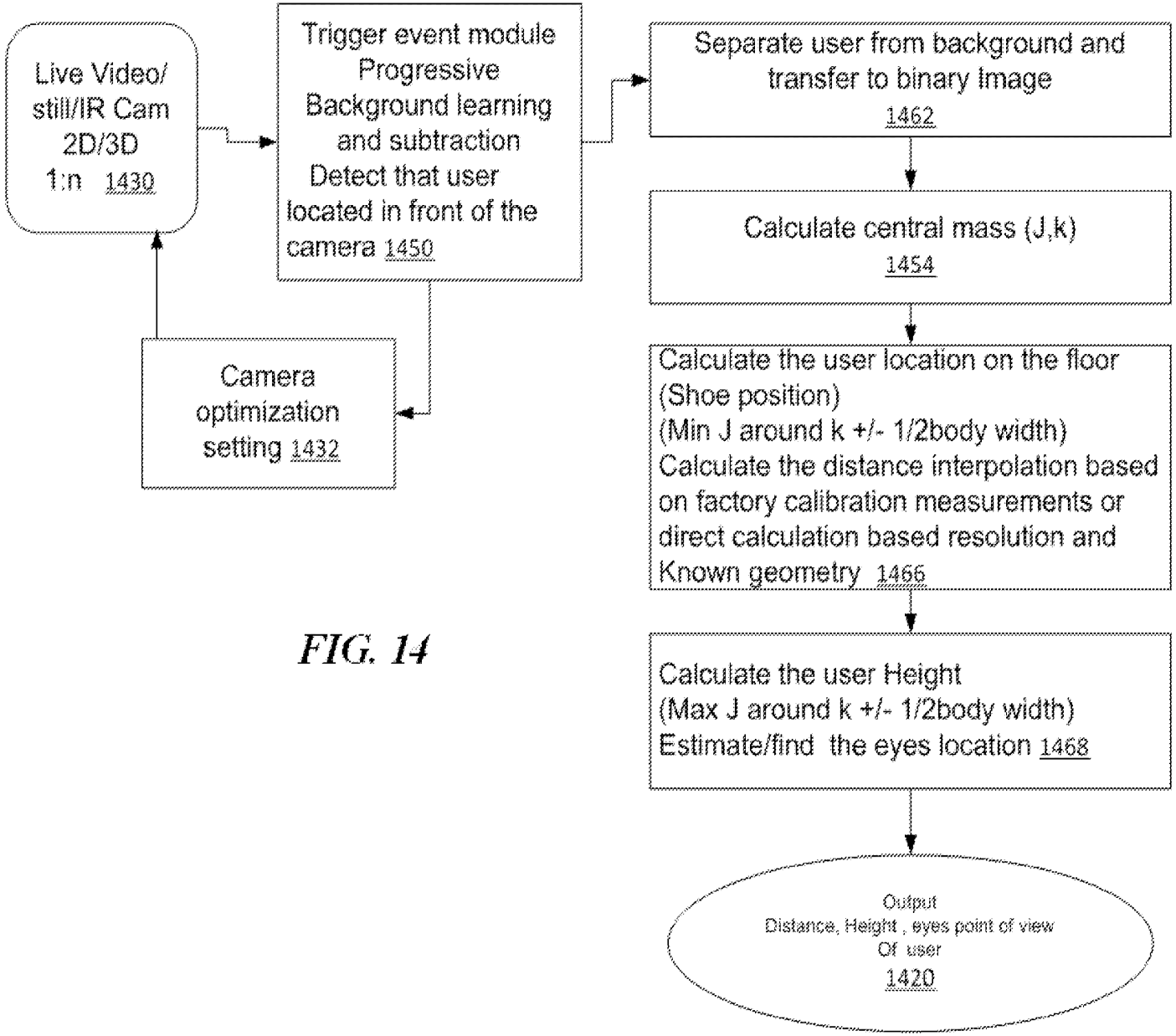
Live Video/ still/IR Cam 2D/3D 1:n 1430
Trigger event module Progressive Background learning and subtraction Detect that user located in front of the camera 1450
Camera optimization setting 1432
Separate user from background and transfer to binary Image 1462
Calculate central mass (J,k) 1454
Calculate the user location on the floor (Shoe position) (Min J around k +/- 1/2body width) Calculate the distance interpolation based on factory calibration measurements or direct calculation based resolution and Known geometry 1466
Calculate the user Height (Max J around k +/- 1/2body width) Estimate/find the eyes location 1468
Output Distance, Height , eyes point of view Of user 1420

FIG. 14

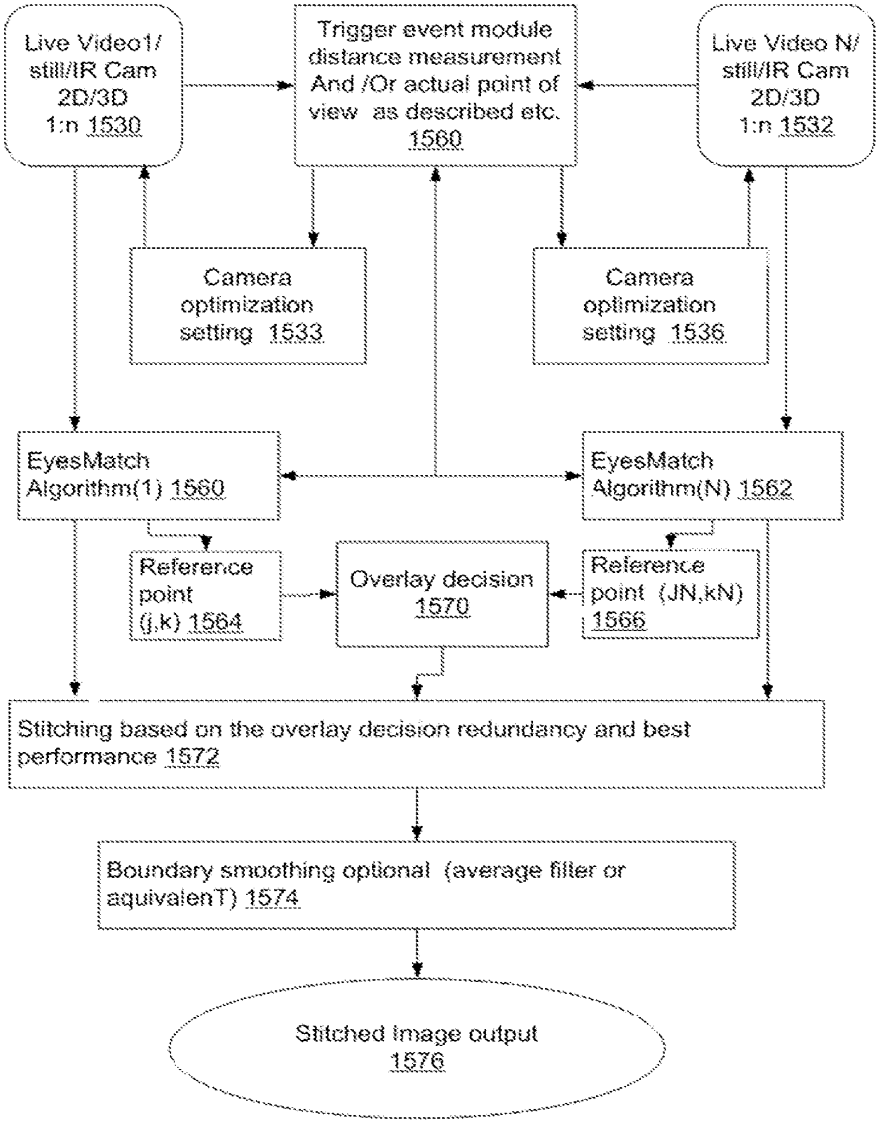
Live Video1/ still/IR Cam 2D/3D 1:n 1530
Trigger event module distance measurement And /Or actual point of view as described etc. 1560
Live Video N/ still/IR Cam 2D/3D 1:n 1532
Camera optimization setting 1533
Camera optimization setting 1536
EyesMatch Algorithm(1) 1560
EyesMatch Algorithm(N) 1562
Reference point (j,k) 1564
Overlay decision 1570
Reference point (JN,kN) 1566
Stitching based on the overlay decision redundancy and best performance 1572
Boundary smoothing optional (average filter or aquivalenT) 1574
Stitched Image output 1576

FIG. 15

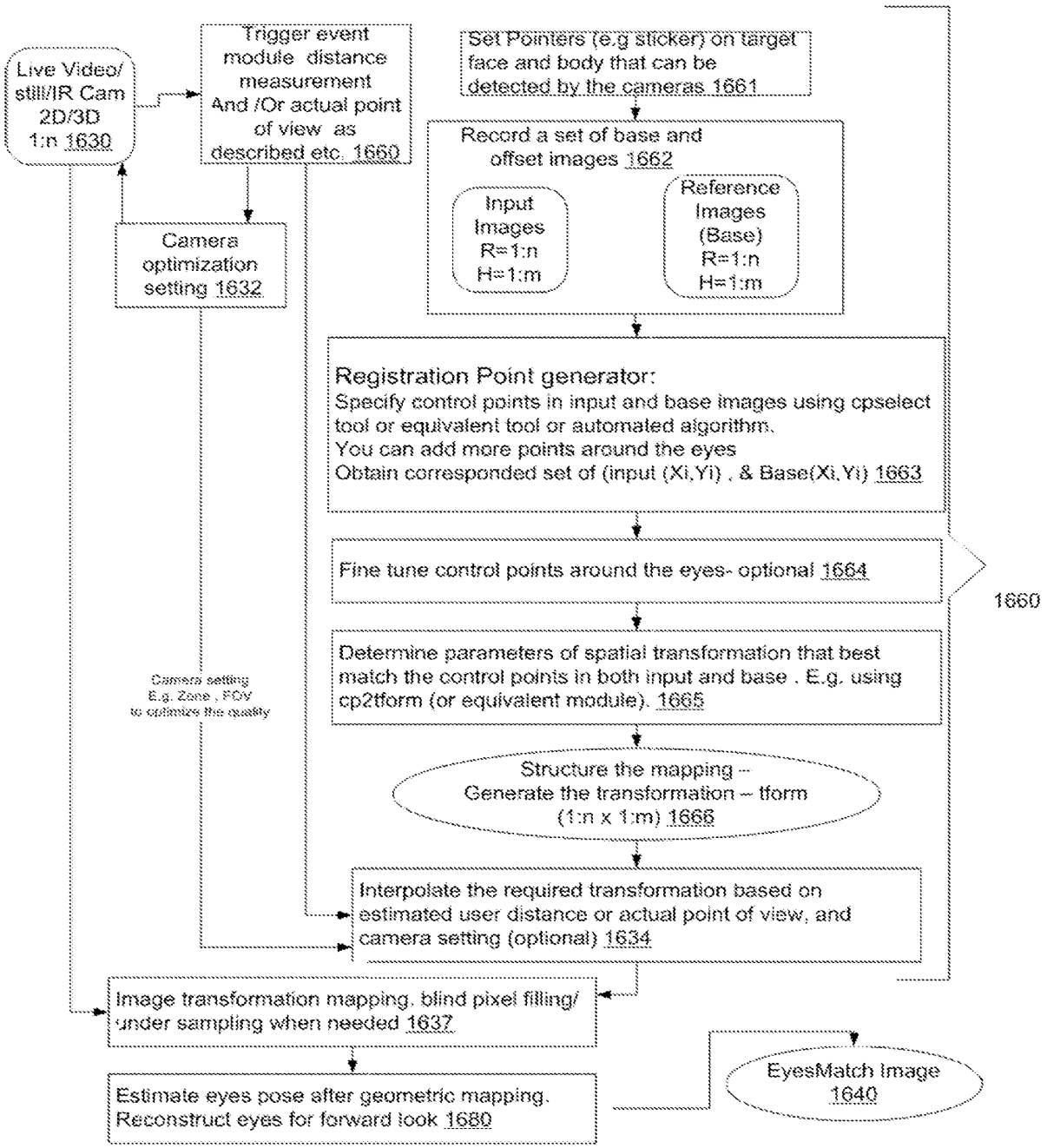
Live Video/ still/IR Cam 2D/3D 1:n 1630
Trigger event module distance measurement And /Or actual point of view as described etc. 1660
Set Pointers (e.g sticker) on target face and body that can be detected by the cameras 1661
Record a set of base and offset images 1662
Input Images R=1:n H=1:m
Reference Images (Base) R=1:n H=1:m
Camera optimization setting 1632
Registration Point generator:
Specify control points in input and base images using cpselect tool or equivalent tool or automated algorithm.
You can add more points around the eyes
Obtain corresponded set of (input (Xi,Yi) , & Base(Xi,Yi) 1663
Fine tune control points around the eyes- optional 1664
1660
Determine parameters of spatial transformation that best match the control points in both input and base . E.g. using cp2tform (or equivalent module). 1665
Camera setting E.g. Zoom , FOV to optimize the quality
Structure the mapping – Generate the transformation – tform (1:n x 1:m) 1666
Interpolate the required transformation based on estimated user distance or actual point of view, and camera setting (optional) 1634
Image transformation mapping, blind pixel filling/ under sampling when needed 1637
Estimate eyes pose after geometric mapping. Reconstruct eyes for forward look 1680
EyesMatch Image 1640

FIG. 16

Electronic Patent Application Fee Transmittal

Application Number:	
Filing Date:	
Title of Invention:	DEVICES, SYSTEMS AND METHODS OF CAPTURING AND DISPLAYING APPEARANCES
First Named Inventor/Applicant Name:	Nissi Vilcovsky
Filer:	Joseph Bach/Monica Moreno
Attorney Docket Number:	067055-002000

Filed as Small Entity

Utility under 35 USC 111(a) Filing Fees

Description	Fee Code	Quantity	Amount	Sub-Total in USD($)
Basic Filing:				
Utility filing Fee (Electronic filing)	4011	1	98	98
Utility Search Fee	2111	1	310	310
Utility Examination Fee	2311	1	125	125
Pages:				
Claims:				
Miscellaneous-Filing:				
Petition:				
Patent-Appeals-and-Interference:				

Description	Fee Code	Quantity	Amount	Sub-Total in USD($)
Post-Allowance-and-Post-Issuance:				
Extension-of-Time:				
Miscellaneous:				
			Total in USD ($)	**533**

Electronic Acknowledgement Receipt

EFS ID:	15271045
Application Number:	13843001
International Application Number:	
Confirmation Number:	2550
Title of Invention:	DEVICES, SYSTEMS AND METHODS OF CAPTURING AND DISPLAYING APPEARANCES
First Named Inventor/Applicant Name:	Nissi Vilcovsky
Customer Number:	46188
Filer:	Joseph Bach/Monica Moreno
Filer Authorized By:	Joseph Bach
Attorney Docket Number:	067055-002000
Receipt Date:	15-MAR-2013
Filing Date:	
Time Stamp:	20:36:15
Application Type:	Utility under 35 USC 111(a)

Payment information:

Submitted with Payment	yes
Payment Type	Deposit Account
Payment was successfully received in RAM	$533
RAM confirmation Number	27047
Deposit Account	503557
Authorized User	

File Listing:

Document Number	Document Description	File Name	File Size(Bytes)/ Message Digest	Multi Part /.zip	Pages (if appl.)

1	Application Data Sheet	067055_002000_ADS.pdf	1503795 593dc908672c15192fa4c5bb81a7c72d6de4c08d	no	7
Warnings:					
Information:					
2		067055_002000_Specification.pdf	297939 c15cd3bf14464db879e239098310b71c72171259	yes	48
	Multipart Description/PDF files in .zip description				
	Document Description		**Start**	**End**	
	Specification		1	43	
	Claims		44	47	
	Abstract		48	48	
Warnings:					
Information:					
3	Drawings-only black and white line drawings	067055_002000_Drawings.pdf	1293410 24e8e6680f16ff04ebf6e6ed5e10d669cd9e3af1	no	10
Warnings:					
The page size in the PDF is too large. The pages should be 8.5 x 11 or A4. If this PDF is submitted, the pages will be resized upon entry into the Image File Wrapper and may affect subsequent processing					
Information:					
4	Fee Worksheet (SB06)	fee-info.pdf	33309 134512aea5c7cb5503b98b0c1e98a7fb87db1074	no	2
Warnings:					
Information:					
		Total Files Size (in bytes):	3128453		

This Acknowledgement Receipt evidences receipt on the noted date by the USPTO of the indicated documents, characterized by the applicant, and including page counts, where applicable. It serves as evidence of receipt similar to a Post Card, as described in MPEP 503.

New Applications Under 35 U.S.C. 111
If a new application is being filed and the application includes the necessary components for a filing date (see 37 CFR 1.53(b)-(d) and MPEP 506), a Filing Receipt (37 CFR 1.54) will be issued in due course and the date shown on this Acknowledgement Receipt will establish the filing date of the application.

National Stage of an International Application under 35 U.S.C. 371
If a timely submission to enter the national stage of an international application is compliant with the conditions of 35 U.S.C. 371 and other applicable requirements a Form PCT/DO/EO/903 indicating acceptance of the application as a national stage submission under 35 U.S.C. 371 will be issued in addition to the Filing Receipt, in due course.

New International Application Filed with the USPTO as a Receiving Office
If a new international application is being filed and the international application includes the necessary components for an international filing date (see PCT Article 11 and MPEP 1810), a Notification of the International Application Number and of the International Filing Date (Form PCT/RO/105) will be issued in due course, subject to prescriptions concerning national security, and the date shown on this Acknowledgement Receipt will establish the international filing date of the application.

DocCode - SCORE

SCORE Placeholder Sheet for IFW Content

Application Number: 13843001 Document Date: 03/15/2013

The presence of this form in the IFW record indicates that the following document type was received in electronic format on the date identified above. This content is stored in the SCORE database.

- Drawings – Other than Black and White Line Drawings

Since this was an electronic submission, there is no physical artifact folder, no artifact folder is recorded in PALM, and no paper documents or physical media exist. The TIFF images in the IFW record were created from the original documents that are stored in SCORE.

To access the documents in the SCORE database, refer to instructions developed by SIRA.

At the time of document entry (noted above):

- Examiners may access SCORE content via the eDAN interface.
- Other USPTO employees can bookmark the current SCORE URL (http://es/ScoreAccessWeb/).
- External customers may access SCORE content via the Public and Private PAIR interfaces.

Form Revision Date: February 8, 2006

PTO/AIA/01 (06-12)
Approved for use through 01/31/2014. OMB 0651-0032
U.S. Patent and Trademark Office; U.S. DEPARTMENT OF COMMERCE
Under the Paperwork Reduction Act of 1995, no persons are required to respond to a collection of information unless it displays a valid OMB control number.

DECLARATION (37 CFR 1.63) FOR UTILITY OR DESIGN APPLICATION USING AN APPLICATION DATA SHEET (37 CFR 1.76)

Title of Invention	DEVICES, SYSTEMS AND METHODS OF CAPTURING AND DISPLAYING APPEARANCES

As the below named inventor, I hereby declare that:

This declaration is directed to:

☐ The attached application, or

☒ United States application or PCT international application number 13/843,001

filed on March 15, 2013.

The above-identified application was made or authorized to be made by me.

I believe that I am the original inventor or an original joint inventor of a claimed invention in the application.

I hereby acknowledge that any willful false statement made in this declaration is punishable under 18 U.S.C. 1001 by fine or imprisonment of not more than five (5) years, or both.

WARNING:

Petitioner/applicant is cautioned to avoid submitting personal information in documents filed in a patent application that may contribute to identity theft. Personal information such as social security numbers, bank account numbers, or credit card numbers (other than a check or credit card authorization form PTO-2038 submitted for payment purposes) is never required by the USPTO to support a petition or an application. If this type of personal information is included in documents submitted to the USPTO, petitioners/applicants should consider redacting such personal information from the documents before submitting them to the USPTO. Petitioner/applicant is advised that the record of a patent application is available to the public after publication of the application (unless a non-publication request in compliance with 37 CFR 1.213(a) is made in the application) or issuance of a patent. Furthermore, the record from an abandoned application may also be available to the public if the application is referenced in a published application or an issued patent (see 37 CFR 1.14). Checks and credit card authorization forms PTO-2038 submitted for payment purposes are not retained in the application file and therefore are not publicly available.

LEGAL NAME OF INVENTOR

Inventor: Nissi Vilcovsky Date (Optional): 03/15/13

Signature:

Note: An application data sheet (PTO/SB/14 or equivalent), including naming the entire inventive entity, must accompany this form or must have been previously filed. Use an additional PTO/AIA/01 form for each additional inventor.

This collection of information is required by 35 U.S.C. 115 and 37 CFR 1.63. The information is required to obtain or retain a benefit by the public which is to file (and by the USPTO to process) an application. Confidentiality is governed by 35 U.S.C. 122 and 37 CFR 1.11 and 1.14. This collection is estimated to take 1 minute to complete, including gathering, preparing, and submitting the completed application form to the USPTO. Time will vary depending upon the individual case. Any comments on the amount of time you require to complete this form and/or suggestions for reducing this burden, should be sent to the Chief Information Officer, U.S. Patent and Trademark Office, U.S. Department of Commerce, P.O. Box 1450, Alexandria, VA 22313-1450. DO NOT SEND FEES OR COMPLETED FORMS TO THIS ADDRESS. **SEND TO: Commissioner for Patents, P.O. Box 1450, Alexandria, VA 22313-1450.**

If you need assistance in completing the form, call 1-800-PTO-9199 and select option 2.

PTO/AIA/01 (06-12)
Approved for use through 01/31/2014. OMB 0651-0032
U.S. Patent and Trademark Office; U.S. DEPARTMENT OF COMMERCE
Under the Paperwork Reduction Act of 1995, no persons are required to respond to a collection of information unless it displays a valid OMB control number.

DECLARATION (37 CFR 1.63) FOR UTILITY OR DESIGN APPLICATION USING AN APPLICATION DATA SHEET (37 CFR 1.76)

Title of Invention	DEVICES, SYSTEMS AND METHODS OF CAPTURING AND DISPLAYING APPEARANCES

As the below named inventor, I hereby declare that:

This declaration is directed to:

☐ The attached application, or

☒ United States application or PCT international application number 13/843,001 filed on March 15, 2013.

The above-identified application was made or authorized to be made by me.

I believe that I am the original inventor or an original joint inventor of a claimed invention in the application.

I hereby acknowledge that any willful false statement made in this declaration is punishable under 18 U.S.C. 1001 by fine or imprisonment of not more than five (5) years, or both.

WARNING:

Petitioner/applicant is cautioned to avoid submitting personal information in documents filed in a patent application that may contribute to identity theft. Personal information such as social security numbers, bank account numbers, or credit card numbers (other than a check or credit card authorization form PTO-2038 submitted for payment purposes) is never required by the USPTO to support a petition or an application. If this type of personal information is included in documents submitted to the USPTO, petitioners/applicants should consider redacting such personal information from the documents before submitting them to the USPTO. Petitioner/applicant is advised that the record of a patent application is available to the public after publication of the application (unless a non-publication request in compliance with 37 CFR 1.213(a) is made in the application) or issuance of a patent. Furthermore, the record from an abandoned application may also be available to the public if the application is referenced in a published application or an issued patent (see 37 CFR 1.14). Checks and credit card authorization forms PTO-2038 submitted for payment purposes are not retained in the application file and therefore are not publicly available.

LEGAL NAME OF INVENTOR

Inventor: Ofer Saban Date (Optional): 04/15/2013

Signature: _____

Note: An application data sheet (PTO/SB/14 or equivalent), including naming the entire inventive entity, must accompany this form or must have been previously filed. Use an additional PTO/AIA/01 form for each additional inventor.

This collection of information is required by 35 U.S.C. 115 and 37 CFR 1.63. The information is required to obtain or retain a benefit by the public which is to file (and by the USPTO to process) an application. Confidentiality is governed by 35 U.S.C. 122 and 37 CFR 1.11 and 1.14. This collection is estimated to take 1 minute to complete, including gathering, preparing, and submitting the completed application form to the USPTO. Time will vary depending upon the individual case. Any comments on the amount of time you require to complete this form and/or suggestions for reducing this burden, should be sent to the Chief Information Officer, U.S. Patent and Trademark Office, U.S. Department of Commerce, P.O. Box 1450, Alexandria, VA 22313-1450. DO NOT SEND FEES OR COMPLETED FORMS TO THIS ADDRESS. **SEND TO: Commissioner for Patents, P.O. Box 1450, Alexandria, VA 22313-1450.**

If you need assistance in completing the form, call 1-800-PTO-9199 and select option 2.

Doc Code: PA..
Document Description: Power of Attorney

PTO/AIA/82A (07-12)
Approved for use through 11/30/2014. OMB 0651-0035
U.S. Patent and Trademark Office; U.S. DEPARTMENT OF COMMERCE
Under the Paperwork Reduction Act of 1995, no persons are required to respond to a collection of information unless it displays a valid OMB control number.

TRANSMITTAL FOR POWER OF ATTORNEY TO ONE OR MORE REGISTERED PRACTITIONERS

NOTE: This form is to be submitted with the Power of Attorney by Applicant **form (PTO/AIA/82B or equivalent)** to identify the application to which the Power of Attorney is directed, in accordance with 37 CFR 1.5. If the Power of Attorney by **Applicant form** is not accompanied by this transmittal form or an equivalent, the Power of Attorney will not be recognized in the application.

Application Number	13/843,001
Filing Date	March 15, 2013
First Named Inventor	Nissi Vilcovsky
Title	DEVICES, SYSTEMS AND METHODS OF CAPTURING AND DISPLAYING APPEARANCES
Art Unit	2852
Examiner Name	Unassigned
Attorney Docket Number	067055-002000

SIGNATURE of Applicant or Patent Practitioner

Signature	/Joseph Bach/	Date	May 3, 2013
Name	Joseph Bach	Telephone	(650) 320-7721
Registration Number	37,771		

NOTE: This form must be signed in accordance with 37 CFR 1.33. **See 37 CFR 1.4(d) for signature requirements and certifications.**

☐ *Total of _____ forms are submitted.

This collection of information is required by 37 CFR 1.31, 1.32 and 1.33. The information is required to obtain or retain a benefit by the public which is to file (and by the USPTO to process) an application. Confidentiality is governed by 35 U.S.C. 122 and 37 CFR 1.11 and 1.14. This collection is estimated to take 3 minutes to complete, including gathering, preparing, and submitting the completed application form to the USPTO. Time will vary depending upon the individual case. Any comments on the amount of time you require to complete this form and/or suggestions for reducing this burden, should be sent to the Chief Information Officer, U.S. Patent and Trademark Office, U.S. Department of Commerce, P.O. Box 1450, Alexandria, VA 22313-1450. DO NOT SEND FEES OR COMPLETED FORMS TO THIS ADDRESS. **SEND TO: Commissioner for Patents, P.O. Box 1450, Alexandria, VA 22313-1450.**

If you need assistance in completing the form, call 1-800-PTO-9199 and select option 2.

Doc Code: PA..
Document Description: Power of Attorney

PTO/AIA/82B(07-12)
Approved for use through 11/30/2014. OMB 0651-0035
U.S. Patent and Trademark Office; U.S. DEPARTMENT OF COMMERCE
Under the Paperwork Reduction Act of 1995, no persons are required to respond to a collection of information unless it displays a valid OMB control number.

POWER OF ATTORNEY BY APPLICANT

I hereby revoke all previous powers of attorney given in the application identified in the attached transmittal letter.

[x] I hereby appoint Practitioner(s) associated with the following Customer Number as my/our attorney(s) or agent(s), and to transact all business in the United States Patent and Trademark Office connected therewith for the application referenced in the attached transmittal letter (form PTO/AIA/82A or equivalent): 46188

OR

[ ] I hereby appoint Practitioner(s) named below as my/our attorney(s) or agent(s), and to transact all business in the United States Patent and Trademark Office connected therewith for the application referenced in the attached transmittal letter (form PTO/AIA/82A or equivalent):

Name	Registration Number	Name	Registration Number

Please recognize or change the correspondence address for the application identified in the attached transmittal letter to:

[x] The address associated with the above-mentioned Customer Number.
OR
[ ] The address associated with Customer Number:
OR

[ ] Firm or Individual Name					
Address					
City		State		Zip	
Country					
Telephone		Email			

I am the Applicant:

[x] Inventor or Joint Inventor
[ ] Legal Representative of a Deceased or Legally Incapacitated Inventor
[ ] Assignee or Person to Whom the Inventor is Under an Obligation to Assign
[ ] Person Who Otherwise Shows Sufficient Proprietary Interest (e.g., a petition under 37 CFR 1.46(b)(2) was granted in the application or is concurrently being filed with this document)

SIGNATURE of Applicant for Patent

Signature	[signature]	Date	04/15/13
Name	Nissi Vilcovsky	Telephone	+972544477477
Title and Company	Inventor		

NOTE: Signature - This form must be signed by the applicant in accordance with 37 CFR 1.33. See 37 CFR 1.4 for signature requirements and certifications. Submit multiple forms for more than one signature, see below *.

[ ] *Total of _____ forms are submitted.

This collection of information is required by 37 CFR 1.31, 1.32 and 1.33. The information is required to obtain or retain a benefit by the public which is to file (and by the USPTO to process) an application. Confidentiality is governed by 35 U.S.C. 122 and 37 CFR 1.11 and 1.14. This collection is estimated to take 3 minutes to complete, including gathering, preparing, and submitting the completed application form to the USPTO. Time will vary depending upon the individual case. Any comments on the amount of time you require to complete this form and/or suggestions for reducing this burden, should be sent to the Chief Information Officer, U.S. Patent and Trademark Office, U.S. Department of Commerce, P.O. Box 1450, Alexandria, VA 22313-1450. DO NOT SEND FEES OR COMPLETED FORMS TO THIS ADDRESS. SEND TO: **Commissioner for Patents, P.O. Box 1450, Alexandria, VA 22313-1450.**

If you need assistance in completing the form, call 1-800-PTO-9199 and select option 2.

Doc Code: PA..
Document Description: Power of Attorney

PTO/AIA/82A (07-12)
Approved for use through 11/30/2014. OMB 0651-0035
U.S. Patent and Trademark Office; U.S. DEPARTMENT OF COMMERCE
Under the Paperwork Reduction Act of 1995, no persons are required to respond to a collection of information unless it displays a valid OMB control number.

TRANSMITTAL FOR POWER OF ATTORNEY TO ONE OR MORE REGISTERED PRACTITIONERS

NOTE: This form is to be submitted with the Power of Attorney by Applicant **form (PTO/AIA/82B or equivalent)** to identify the application to which the Power of Attorney is directed, in accordance with 37 CFR 1.5. If the Power of Attorney by **Applicant form** is not accompanied by this transmittal form or an equivalent, the Power of Attorney will not be recognized in the application.

Application Number	13/843,001
Filing Date	March 15, 2013
First Named Inventor	Nissi Vilcovsky
Title	DEVICES, SYSTEMS AND METHODS OF CAPTURING AND DISPLAYING APPEARANCES
Art Unit	2852
Examiner Name	Unassigned
Attorney Docket Number	067055-002000

SIGNATURE of Applicant or Patent Practitioner

Signature	/Joseph Bach/	Date	May 3, 2013
Name	Joseph Bach	Telephone	(650) 320-7721
Registration Number	37,771		

NOTE: This form must be signed in accordance with 37 CFR 1.33. **See 37 CFR 1.4(d) for signature requirements and certifications.**

☐ *Total of _____ forms are submitted.

This collection of information is required by 37 CFR 1.31, 1.32 and 1.33. The information is required to obtain or retain a benefit by the public which is to file (and by the USPTO to process) an application. Confidentiality is governed by 35 U.S.C. 122 and 37 CFR 1.11 and 1.14. This collection is estimated to take 3 minutes to complete, including gathering, preparing, and submitting the completed application form to the USPTO. Time will vary depending upon the individual case. Any comments on the amount of time you require to complete this form and/or suggestions for reducing this burden, should be sent to the Chief Information Officer, U.S. Patent and Trademark Office, U.S. Department of Commerce, P.O. Box 1450, Alexandria, VA 22313-1450. DO NOT SEND FEES OR COMPLETED FORMS TO THIS ADDRESS. **SEND TO: Commissioner for Patents, P.O. Box 1450, Alexandria, VA 22313-1450.**

If you need assistance in completing the form, call 1-800-PTO-9199 and select option 2.

Doc Code: PA..
Document Description: Power of Attorney

PTO/AIA/82B(07-12)
Approved for use through 11/30/2014. OMB 0651-0035
U.S. Patent and Trademark Office; U.S. DEPARTMENT OF COMMERCE
Under the Paperwork Reduction Act of 1995, no persons are required to respond to a collection of information unless it displays a valid OMB control number.

POWER OF ATTORNEY BY APPLICANT

I hereby revoke all previous powers of attorney given in the application identified in the attached transmittal letter.

[x] I hereby appoint Practitioner(s) associated with the following Customer Number as my/our attorney(s) or agent(s), and to transact all business in the United States Patent and Trademark Office connected therewith for the application referenced in the attached transmittal letter (form PTO/AIA/82A or equivalent): 46188

OR

[ ] I hereby appoint Practitioner(s) named below as my/our attorney(s) or agent(s), and to transact all business in the United States Patent and Trademark Office connected therewith for the application referenced in the attached transmittal letter (form PTO/AIA/82A or equivalent):

Name	Registration Number	Name	Registration Number

Please recognize or change the correspondence address for the application identified in the attached transmittal letter to:

[x] The address associated with the above-mentioned Customer Number.

OR

[ ] The address associated with Customer Number:

OR

[ ] Firm or Individual Name					
Address					
City		State		Zip	
Country					
Telephone		Email			

I am the Applicant:

[x] Inventor or Joint Inventor

[ ] Legal Representative of a Deceased or Legally Incapacitated Inventor

[ ] Assignee or Person to Whom the Inventor is Under an Obligation to Assign

[ ] Person Who Otherwise Shows Sufficient Proprietary Interest (e.g., a petition under 37 CFR 1.46(b)(2) was granted in the application or is concurrently being filed with this document)

SIGNATURE of Applicant for Patent

Signature	[signature]	Date	04/15/18
Name	Ofer Saban	Telephone	5714289995
Title and Company	Inventor		

NOTE: Signature - This form must be signed by the applicant in accordance with 37 CFR 1.33. See 37 CFR 1.4 for signature requirements and certifications. Submit multiple forms for more than one signature, see below *.

[ ] *Total of _____ forms are submitted.

This collection of information is required by 37 CFR 1.31, 1.32 and 1.33. The information is required to obtain or retain a benefit by the public which is to file (and by the USPTO to process) an application. Confidentiality is governed by 35 U.S.C. 122 and 37 CFR 1.11 and 1.14. This collection is estimated to take 3 minutes to complete, including gathering, preparing, and submitting the completed application form to the USPTO. Time will vary depending upon the individual case. Any comments on the amount of time you require to complete this form and/or suggestions for reducing this burden, should be sent to the Chief Information Officer, U.S. Patent and Trademark Office, U.S. Department of Commerce, P.O. Box 1450, Alexandria, VA 22313-1450. DO NOT SEND FEES OR COMPLETED FORMS TO THIS ADDRESS. SEND TO: **Commissioner for Patents, P.O. Box 1450, Alexandria, VA 22313-1450.**

If you need assistance in completing the form, call 1-800-PTO-9199 and select option 2.

Electronic Patent Application Fee Transmittal

Application Number:	13843001
Filing Date:	15-Mar-2013
Title of Invention:	DEVICES, SYSTEMS AND METHODS OF CAPTURING AND DISPLAYING APPEARANCES
First Named Inventor/Applicant Name:	Nissi Vilcovsky
Filer:	Joseph Bach/Monica Moreno
Attorney Docket Number:	067055-002000

Filed as Small Entity

Utility under 35 USC 111(a) Filing Fees

Description	Fee Code	Quantity	Amount	Sub-Total in USD($)
Basic Filing:				
Pages:				
Claims:				
Miscellaneous-Filing:				
Late Filing Fee for Oath or Declaration	2051	1	70	70
Petition:				
Patent-Appeals-and-Interference:				
Post-Allowance-and-Post-Issuance:				
Extension-of-Time:				

Description	Fee Code	Quantity	Amount	Sub-Total in USD($)
Miscellaneous:				
		Total in USD ($)		**70**

Electronic Acknowledgement Receipt

EFS ID:	15685071
Application Number:	13843001
International Application Number:	
Confirmation Number:	2550
Title of Invention:	DEVICES, SYSTEMS AND METHODS OF CAPTURING AND DISPLAYING APPEARANCES
First Named Inventor/Applicant Name:	Nissi Vilcovsky
Customer Number:	46188
Filer:	Joseph Bach/Monica Moreno
Filer Authorized By:	Joseph Bach
Attorney Docket Number:	067055-002000
Receipt Date:	03-MAY-2013
Filing Date:	15-MAR-2013
Time Stamp:	13:49:16
Application Type:	Utility under 35 USC 111(a)

Payment information:

Submitted with Payment	yes
Payment Type	Deposit Account
Payment was successfully received in RAM	$70
RAM confirmation Number	10445
Deposit Account	503557
Authorized User	

File Listing:

Document Number	Document Description	File Name	File Size(Bytes)/ Message Digest	Multi Part /.zip	Pages (if appl.)

1	Oath or Declaration filed	067055_002000_Declarations.pdf	949841 001819acf0bea83835b3cb6cf7421cd5f6eccce66	no	2
Warnings:					
Information:					
2	Power of Attorney	067055_002000_POA.pdf	1132900 eda568561ec27eae6c5c4546b85ff5c4040ac747	no	4
Warnings:					
Information:					
3	Fee Worksheet (SB06)	fee-info.pdf	30379 43657f9790bc2816ffb88c7b1d7c93be28ffbe8cf	no	2
Warnings:					
Information:					
			Total Files Size (in bytes):	2113120	

This Acknowledgement Receipt evidences receipt on the noted date by the USPTO of the indicated documents, characterized by the applicant, and including page counts, where applicable. It serves as evidence of receipt similar to a Post Card, as described in MPEP 503.

<u>New Applications Under 35 U.S.C. 111</u>
If a new application is being filed and the application includes the necessary components for a filing date (see 37 CFR 1.53(b)-(d) and MPEP 506), a Filing Receipt (37 CFR 1.54) will be issued in due course and the date shown on this Acknowledgement Receipt will establish the filing date of the application.

<u>National Stage of an International Application under 35 U.S.C. 371</u>
If a timely submission to enter the national stage of an international application is compliant with the conditions of 35 U.S.C. 371 and other applicable requirements a Form PCT/DO/EO/903 indicating acceptance of the application as a national stage submission under 35 U.S.C. 371 will be issued in addition to the Filing Receipt, in due course.

<u>New International Application Filed with the USPTO as a Receiving Office</u>
If a new international application is being filed and the international application includes the necessary components for an international filing date (see PCT Article 11 and MPEP 1810), a Notification of the International Application Number and of the International Filing Date (Form PCT/RO/105) will be issued in due course, subject to prescriptions concerning national security, and the date shown on this Acknowledgement Receipt will establish the international filing date of the application.

PATENT APPLICATION FEE DETERMINATION RECORD

Substitute for Form PTO-875

Application or Docket Number
13/843,001

APPLICATION AS FILED - PART I

FOR	(Column 1) NUMBER FILED	(Column 2) NUMBER EXTRA	SMALL ENTITY RATE($)	SMALL ENTITY FEE($)	OR	OTHER THAN SMALL ENTITY RATE($)	OTHER THAN SMALL ENTITY FEE($)
BASIC FEE (37 CFR 1.16(a), (b), or (c))	N/A	N/A	N/A	70		N/A	
SEARCH FEE (37 CFR 1.16(k), (i), or (m))	N/A	N/A	N/A	300		N/A	
EXAMINATION FEE (37 CFR 1.16(o), (p), or (q))	N/A	N/A	N/A	360		N/A	
TOTAL CLAIMS (37 CFR 1.16(i))	20 minus 20 =	*	x 40 =	0.00	OR		
INDEPENDENT CLAIMS (37 CFR 1.16(h))	1 minus 3 =	*	x 210 =	0.00			
APPLICATION SIZE FEE (37 CFR 1.16(s))	If the specification and drawings exceed 100 sheets of paper, the application size fee due is $310 ($155 for small entity) for each additional 50 sheets or fraction thereof. See 35 U.S.C. 41(a)(1)(G) and 37 CFR 1.16(s).			0.00			
MULTIPLE DEPENDENT CLAIM PRESENT (37 CFR 1.16(j))				0.00			
* If the difference in column 1 is less than zero, enter "0" in column 2.			TOTAL	730		TOTAL	

APPLICATION AS AMENDED - PART II

		(Column 1) CLAIMS REMAINING AFTER AMENDMENT		(Column 2) HIGHEST NUMBER PREVIOUSLY PAID FOR	(Column 3) PRESENT EXTRA	SMALL ENTITY RATE($)	SMALL ENTITY ADDITIONAL FEE($)	OR	OTHER THAN SMALL ENTITY RATE($)	OTHER THAN SMALL ENTITY ADDITIONAL FEE($)
AMENDMENT A	Total (37 CFR 1.16(i))	*	Minus	**	=	x =		OR	x =	
AMENDMENT A	Independent (37 CFR 1.16(h))	*	Minus	***	=	x =		OR	x =	
AMENDMENT A	Application Size Fee (37 CFR 1.16(s))									
AMENDMENT A	FIRST PRESENTATION OF MULTIPLE DEPENDENT CLAIM (37 CFR 1.16(j))							OR		
						TOTAL ADD'L FEE		OR	TOTAL ADD'L FEE	

		(Column 1) CLAIMS REMAINING AFTER AMENDMENT		(Column 2) HIGHEST NUMBER PREVIOUSLY PAID FOR	(Column 3) PRESENT EXTRA	RATE($)	ADDITIONAL FEE($)		RATE($)	ADDITIONAL FEE($)
AMENDMENT B	Total (37 CFR 1.16(i))	*	Minus	**	=	x =		OR	x =	
AMENDMENT B	Independent (37 CFR 1.16(h))	*	Minus	***	=	x =		OR	x =	
AMENDMENT B	Application Size Fee (37 CFR 1.16(s))									
AMENDMENT B	FIRST PRESENTATION OF MULTIPLE DEPENDENT CLAIM (37 CFR 1.16(j))							OR		
						TOTAL ADD'L FEE		OR	TOTAL ADD'L FEE	

* If the entry in column 1 is less than the entry in column 2, write "0" in column 3.
** If the "Highest Number Previously Paid For" IN THIS SPACE is less than 20, enter "20".
*** If the "Highest Number Previously Paid For" IN THIS SPACE is less than 3, enter "3".
The "Highest Number Previously Paid For" (Total or Independent) is the highest found in the appropriate box in column 1.

UNITED STATES PATENT AND TRADEMARK OFFICE

UNITED STATES DEPARTMENT OF COMMERCE
United States Patent and Trademark Office
Address: COMMISSIONER FOR PATENTS
P.O. Box 1450
Alexandria, Virginia 22313-1450
www.uspto.gov

APPLICATION NUMBER	FILING or 371(c) DATE	GRP ART UNIT	FIL FEE REC'D	ATTY.DOCKET.NO	TOT CLAIMS	IND CLAIMS
13/843,001	03/15/2013	2852	603	067055-002000	20	1

CONFIRMATION NO. 2550

46188
Nixon Peabody LLP
P.O. Box 60610
Palo Alto, CA 94306

FILING RECEIPT

OC000000060937057

Date Mailed: 05/09/2013

Receipt is acknowledged of this non-provisional patent application. The application will be taken up for examination in due course. Applicant will be notified as to the results of the examination. Any correspondence concerning the application must include the following identification information: the U.S. APPLICATION NUMBER, FILING DATE, NAME OF APPLICANT, and TITLE OF INVENTION. Fees transmitted by check or draft are subject to collection. Please verify the accuracy of the data presented on this receipt. **If an error is noted on this Filing Receipt, please submit a written request for a Filing Receipt Correction. Please provide a copy of this Filing Receipt with the changes noted thereon. If you received a "Notice to File Missing Parts" for this application, please submit any corrections to this Filing Receipt with your reply to the Notice. When the USPTO processes the reply to the Notice, the USPTO will generate another Filing Receipt incorporating the requested corrections**

Inventor(s)

Nissi Vilcovsky, Tokyo, JAPAN;
Ofer Saban, Vienna, VA;

Applicant(s)

Nissi Vilcovsky, Tokyo, JAPAN;
Ofer Saban, Vienna, VA;

Power of Attorney: None

Domestic Priority data as claimed by applicant

This application is a CIP of 13/088,369 04/17/2011
which is a CON of 11/817,411 08/30/2007 PAT 7948481
which is a 371 of PCT/IL06/00281 03/01/2006
which claims benefit of 60/656,884 03/01/2005
and claims benefit of 60/656,885 03/01/2005
This application 13/843,001
claims benefit of 61/738,957 12/18/2012

Foreign Applications for which priority is claimed (You may be eligible to benefit from the **Patent Prosecution Highway** program at the USPTO. Please see http://www.uspto.gov for more information.) - None.
Foreign application information must be provided in an Application Data Sheet in order to constitute a claim to foreign priority. See 37 CFR 1.55 and 1.76.

Permission to Access - A proper **Authorization to Permit Access to Application by Participating Offices** (PTO/SB/39 or its equivalent) has been received by the USPTO.

If Required, Foreign Filing License Granted: 05/02/2013

The country code and number of your priority application, to be used for filing abroad under the Paris Convention, is **US 13/843,001**

Projected Publication Date: 08/15/2013

Non-Publication Request: No

Early Publication Request: No
**** SMALL ENTITY ****
Title

DEVICES, SYSTEMS AND METHODS OF CAPTURING AND DISPLAYING APPEARANCES

Preliminary Class

396

Statement under 37 CFR 1.55 or 1.78 for AIA (First Inventor to File) Transition Applications: No

PROTECTING YOUR INVENTION OUTSIDE THE UNITED STATES

Since the rights granted by a U.S. patent extend only throughout the territory of the United States and have no effect in a foreign country, an inventor who wishes patent protection in another country must apply for a patent in a specific country or in regional patent offices. Applicants may wish to consider the filing of an international application under the Patent Cooperation Treaty (PCT). An international (PCT) application generally has the same effect as a regular national patent application in each PCT-member country. The PCT process **simplifies** the filing of patent applications on the same invention in member countries, but **does not result** in a grant of "an international patent" and does not eliminate the need of applicants to file additional documents and fees in countries where patent protection is desired.

Almost every country has its own patent law, and a person desiring a patent in a particular country must make an application for patent in that country in accordance with its particular laws. Since the laws of many countries differ in various respects from the patent law of the United States, applicants are advised to seek guidance from specific foreign countries to ensure that patent rights are not lost prematurely.

Applicants also are advised that in the case of inventions made in the United States, the Director of the USPTO must issue a license before applicants can apply for a patent in a foreign country. The filing of a U.S. patent application serves as a request for a foreign filing license. The application's filing receipt contains further information and guidance as to the status of applicant's license for foreign filing.

Applicants may wish to consult the USPTO booklet, "General Information Concerning Patents" (specifically, the section entitled "Treaties and Foreign Patents") for more information on timeframes and deadlines for filing foreign patent applications. The guide is available either by contacting the USPTO Contact Center at 800-786-9199, or it can be viewed on the USPTO website at http://www.uspto.gov/web/offices/pac/doc/general/index.html.

For information on preventing theft of your intellectual property (patents, trademarks and copyrights), you may wish to consult the U.S. Government website, http://www.stopfakes.gov. Part of a Department of Commerce initiative, this website includes self-help "toolkits" giving innovators guidance on how to protect intellectual property in specific countries such as China, Korea and Mexico. For questions regarding patent enforcement issues, applicants may call the U.S. Government hotline at 1-866-999-HALT (1-866-999-4158).

LICENSE FOR FOREIGN FILING UNDER

Title 35, United States Code, Section 184

Title 37, Code of Federal Regulations, 5.11 & 5.15

GRANTED

The applicant has been granted a license under 35 U.S.C. 184, if the phrase "IF REQUIRED, FOREIGN FILING LICENSE GRANTED" followed by a date appears on this form. Such licenses are issued in all applications where the conditions for issuance of a license have been met, regardless of whether or not a license may be required as set forth in 37 CFR 5.15. The scope and limitations of this license are set forth in 37 CFR 5.15(a) unless an earlier license has been issued under 37 CFR 5.15(b). The license is subject to revocation upon written notification. The date indicated is the effective date of the license, unless an earlier license of similar scope has been granted under 37 CFR 5.13 or 5.14.

This license is to be retained by the licensee and may be used at any time on or after the effective date thereof unless it is revoked. This license is automatically transferred to any related applications(s) filed under 37 CFR 1.53(d). This license is not retroactive.

The grant of a license does not in any way lessen the responsibility of a licensee for the security of the subject matter as imposed by any Government contract or the provisions of existing laws relating to espionage and the national security or the export of technical data. Licensees should apprise themselves of current regulations especially with respect to certain countries, of other agencies, particularly the Office of Defense Trade Controls, Department of State (with respect to Arms, Munitions and Implements of War (22 CFR 121-128)); the Bureau of Industry and Security, Department of Commerce (15 CFR parts 730-774); the Office of Foreign AssetsControl, Department of Treasury (31 CFR Parts 500+) and the Department of Energy.

NOT GRANTED

No license under 35 U.S.C. 184 has been granted at this time, if the phrase "IF REQUIRED, FOREIGN FILING LICENSE GRANTED" DOES NOT appear on this form. Applicant may still petition for a license under 37 CFR 5.12, if a license is desired before the expiration of 6 months from the filing date of the application. If 6 months has lapsed from the filing date of this application and the licensee has not received any indication of a secrecy order under 35 U.S.C. 181, the licensee may foreign file the application pursuant to 37 CFR 5.15(b).

SelectUSA

The United States represents the largest, most dynamic marketplace in the world and is an unparalleled location for business investment, innovation, and commercialization of new technologies. The U.S. offers tremendous resources and advantages for those who invest and manufacture goods here. Through SelectUSA, our nation works to promote and facilitate business investment. SelectUSA provides information assistance to the international investor community; serves as an ombudsman for existing and potential investors; advocates on behalf of U.S. cities, states, and regions competing for global investment; and counsels U.S. economic development organizations on investment attraction best practices. To learn more about why the United States is the best country in the world to develop technology, manufacture products, deliver services, and grow your business, visit http://www.SelectUSA.gov or call +1-202-482-6800.

UNITED STATES PATENT AND TRADEMARK OFFICE

UNITED STATES DEPARTMENT OF COMMERCE
United States Patent and Trademark Office
Address: COMMISSIONER FOR PATENTS
P.O. Box 1450
Alexandria, Virginia 22313-1450
www.uspto.gov

APPLICATION NUMBER	FILING OR 371(C) DATE	FIRST NAMED APPLICANT	ATTY. DOCKET NO./TITLE
13/843,001	03/15/2013	Nissi Vilcovsky	067055-002000

CONFIRMATION NO. 2550

FORMALITIES LETTER

46188
Nixon Peabody LLP
P.O. Box 60610
Palo Alto, CA 94306

OC000000060937058

Date Mailed: 05/09/2013

NOTICE TO FILE MISSING PARTS OF NONPROVISIONAL APPLICATION

FILED UNDER 37 CFR 1.53(b)

Filing Date Granted

Items Required To Avoid Abandonment:

An application number and filing date have been accorded to this application. The item(s) indicated below, however, are missing.

Applicant is given **TWO MONTHS** from the date of this Notice within which to file all required items below to avoid abandonment. Extensions of time may be obtained by filing a petition accompanied by the extension fee under the provisions of 37 CFR 1.136(a).

- A surcharge (for late submission of the basic filing fee, search fee, examination fee or inventor's oath or declaration) as set forth in 37 CFR 1.16(f) of $ **70** for a small entity in compliance with 37 CFR 1.27, must be submitted.

SUMMARY OF FEES DUE:

Total fee(s) required within **TWO MONTHS** from the date of this Notice is $ **70** for a small entity
- $ **70** Surcharge.

Items Required To Avoid Processing Delays:

Applicant is notified that the above-identified application contains the deficiencies noted below. No period for reply is set forth in this notice for correction of these deficiencies. However, if a deficiency relates to the inventor's oath or declaration, the applicant must file an oath or declaration in compliance with 37 CFR 1.63, or a substitute statement in compliance with 37 CFR 1.64, executed by or with respect to each actual inventor no later than the expiration of the time period set in the "Notice of Allowability" to avoid abandonment. See 37 CFR 1.53(f).

- A properly executed inventor's oath or declaration has not been received for the following inventor(s):
  ALL
  Applicant may submit the inventor's oath or declaration at any time before the Notice of Allowance and Fee(s) Due, PTOL-85, is mailed.

Replies must be received in the USPTO within the set time period or must include a proper Certificate of Mailing or Transmission under 37 CFR 1.8 with a mailing or transmission date within the set time period. For more information and a suggested format, see Form PTO/SB/92 and MPEP 512.

Replies should be mailed to:

Mail Stop Missing Parts
Commissioner for Patents
P.O. Box 1450
Alexandria VA 22313-1450

Registered users of EFS-Web may alternatively submit their reply to this notice via EFS-Web.
https://sportal.uspto.gov/authenticate/AuthenticateUserLocalEPF.html

For more information about EFS-Web please call the USPTO Electronic Business Center at **1-866-217-9197** or visit our website at http://www.uspto.gov/ebc.

If you are not using EFS-Web to submit your reply, you must include a copy of this notice.

/etadesse/

Office of Data Management, Application Assistance Unit (571) 272-4000, or (571) 272-4200, or 1-888-786-0101

IN THE UNITED STATES PATENT AND TRADEMARK OFFICE

In re application of	Docket No: 067055-002000
Nissi Vilcovsky, et al.	Confirmation No.: 2550
Appln. No.: 13/843,001	Group Art Unit: 2852
Filed: March 15, 2013	Examiner: Unassigned

For: DEVICES, SYSTEMS AND METHODS OF CAPTURING AND DISPLAYING APPEARANCES

RESPONSE TO NOTICE TO FILE MISSING PARTS OF NONPROVISIONAL APPLICATION – FILED UNDER 37 CFR 1.53(b)
Filing Date Granted

Mail Stop: Missing Parts
Commissioner for Patents
P.O. Box 1450
Alexandria, VA 22313-1450

Sir:

In response to the "Notice to File Missing Parts of Nonprovisional Application – Filed Under 37 CFR 1.53(b) *Filing Date Granted*," for the above application, Applicant respectfully notes that the $70 surcharge fee for late submission of the declarations was submitted on May 3, 2013 along with the executed inventor's declarations via EFS web.

Except for the issue fee and publication fee, which will be separately authorized, the Commissioner is hereby authorized to charge any additional fees which may be required in this application under 37 C.F.R. §§1.16-1.17 during its entire pendency, or credit any overpayment, to Deposit Account No. 50-3557.

Respectfully submitted,

/Joseph Bach/
Joseph Bach
Registration No. 37,771

NIXON PEABODY LLP
P.O. Box 60610
Palo Alto, CA 94306
Telephone: (650) 320-7721

Date: May 16, 2013

Electronic Acknowledgement Receipt

EFS ID:	15798647
Application Number:	13843001
International Application Number:	
Confirmation Number:	2550
Title of Invention:	DEVICES, SYSTEMS AND METHODS OF CAPTURING AND DISPLAYING APPEARANCES
First Named Inventor/Applicant Name:	Nissi Vilcovsky
Customer Number:	46188
Filer:	Joseph Bach/Monica Moreno
Filer Authorized By:	Joseph Bach
Attorney Docket Number:	067055-002000
Receipt Date:	16-MAY-2013
Filing Date:	15-MAR-2013
Time Stamp:	17:05:02
Application Type:	Utility under 35 USC 111(a)

Payment information:

Submitted with Payment	no

File Listing:

Document Number	Document Description	File Name	File Size(Bytes)/ Message Digest	Multi Part /.zip	Pages (if appl.)
1	Applicant Response to Pre-Exam Formalities Notice	067055_002000_Response_to_Missing_Parts.pdf	132864 ab3b1878a99b87643e279b5b4f2f01203464b8d6	no	1

Warnings:

Information:

Total Files Size (in bytes):	132864

This Acknowledgement Receipt evidences receipt on the noted date by the USPTO of the indicated documents, characterized by the applicant, and including page counts, where applicable. It serves as evidence of receipt similar to a Post Card, as described in MPEP 503.

New Applications Under 35 U.S.C. 111
If a new application is being filed and the application includes the necessary components for a filing date (see 37 CFR 1.53(b)-(d) and MPEP 506), a Filing Receipt (37 CFR 1.54) will be issued in due course and the date shown on this Acknowledgement Receipt will establish the filing date of the application.

National Stage of an International Application under 35 U.S.C. 371
If a timely submission to enter the national stage of an international application is compliant with the conditions of 35 U.S.C. 371 and other applicable requirements a Form PCT/DO/EO/903 indicating acceptance of the application as a national stage submission under 35 U.S.C. 371 will be issued in addition to the Filing Receipt, in due course.

New International Application Filed with the USPTO as a Receiving Office
If a new international application is being filed and the international application includes the necessary components for an international filing date (see PCT Article 11 and MPEP 1810), a Notification of the International Application Number and of the International Filing Date (Form PCT/RO/105) will be issued in due course, subject to prescriptions concerning national security, and the date shown on this Acknowledgement Receipt will establish the international filing date of the application.

UNITED STATES PATENT AND TRADEMARK OFFICE

UNITED STATES DEPARTMENT OF COMMERCE
United States Patent and Trademark Office
Address: COMMISSIONER FOR PATENTS
P.O. Box 1450
Alexandria, Virginia 22313-1450
www.uspto.gov

APPLICATION NUMBER	FILING or 371(c) DATE	GRP ART UNIT	FIL FEE REC'D	ATTY.DOCKET.NO	TOT CLAIMS	IND CLAIMS
13/843,001	03/15/2013	2656	603	067055-002000	20	1

CONFIRMATION NO. 2550

UPDATED FILING RECEIPT

46188
Nixon Peabody LLP
P.O. Box 60610
Palo Alto, CA 94306

OC000000061383834

Date Mailed: 05/28/2013

Receipt is acknowledged of this non-provisional patent application. The application will be taken up for examination in due course. Applicant will be notified as to the results of the examination. Any correspondence concerning the application must include the following identification information: the U.S. APPLICATION NUMBER, FILING DATE, NAME OF APPLICANT, and TITLE OF INVENTION. Fees transmitted by check or draft are subject to collection. Please verify the accuracy of the data presented on this receipt. **If an error is noted on this Filing Receipt, please submit a written request for a Filing Receipt Correction. Please provide a copy of this Filing Receipt with the changes noted thereon. If you received a "Notice to File Missing Parts" for this application, please submit any corrections to this Filing Receipt with your reply to the Notice. When the USPTO processes the reply to the Notice, the USPTO will generate another Filing Receipt incorporating the requested corrections**

Inventor(s)

Nissi Vilcovsky, Tokyo, JAPAN;
Ofer Saban, Vienna, VA;

Applicant(s)

Nissi Vilcovsky, Tokyo, JAPAN;
Ofer Saban, Vienna, VA;

Power of Attorney: The patent practitioners associated with Customer Number 46188

Domestic Priority data as claimed by applicant

This application is a CIP of 13/088,369 04/17/2011
which is a CON of 11/817,411 08/30/2007 PAT 7948481
which is a 371 of PCT/IL06/00281 03/01/2006
which claims benefit of 60/656,884 03/01/2005
and claims benefit of 60/656,885 03/01/2005
This application 13/843,001
claims benefit of 61/738,957 12/18/2012

Foreign Applications for which priority is claimed (You may be eligible to benefit from the **Patent Prosecution Highway** program at the USPTO. Please see http://www.uspto.gov for more information.) - None.
Foreign application information must be provided in an Application Data Sheet in order to constitute a claim to foreign priority. See 37 CFR 1.55 and 1.76.

Permission to Access - A proper **Authorization to Permit Access to Application by Participating Offices** (PTO/SB/39 or its equivalent) has been received by the USPTO.

If Required, Foreign Filing License Granted: 05/02/2013

The country code and number of your priority application, to be used for filing abroad under the Paris Convention, is **US 13/843,001**

Projected Publication Date: 09/05/2013

Non-Publication Request: No

Early Publication Request: No
**** SMALL ENTITY ****
Title

DEVICES, SYSTEMS AND METHODS OF CAPTURING AND DISPLAYING APPEARANCES

Preliminary Class

348

Statement under 37 CFR 1.55 or 1.78 for AIA (First Inventor to File) Transition Applications: No

PROTECTING YOUR INVENTION OUTSIDE THE UNITED STATES

Since the rights granted by a U.S. patent extend only throughout the territory of the United States and have no effect in a foreign country, an inventor who wishes patent protection in another country must apply for a patent in a specific country or in regional patent offices. Applicants may wish to consider the filing of an international application under the Patent Cooperation Treaty (PCT). An international (PCT) application generally has the same effect as a regular national patent application in each PCT-member country. The PCT process **simplifies** the filing of patent applications on the same invention in member countries, but **does not result** in a grant of "an international patent" and does not eliminate the need of applicants to file additional documents and fees in countries where patent protection is desired.

Almost every country has its own patent law, and a person desiring a patent in a particular country must make an application for patent in that country in accordance with its particular laws. Since the laws of many countries differ in various respects from the patent law of the United States, applicants are advised to seek guidance from specific foreign countries to ensure that patent rights are not lost prematurely.

Applicants also are advised that in the case of inventions made in the United States, the Director of the USPTO must issue a license before applicants can apply for a patent in a foreign country. The filing of a U.S. patent application serves as a request for a foreign filing license. The application's filing receipt contains further information and guidance as to the status of applicant's license for foreign filing.

Applicants may wish to consult the USPTO booklet, "General Information Concerning Patents" (specifically, the section entitled "Treaties and Foreign Patents") for more information on timeframes and deadlines for filing foreign patent applications. The guide is available either by contacting the USPTO Contact Center at 800-786-9199, or it can be viewed on the USPTO website at http://www.uspto.gov/web/offices/pac/doc/general/index.html.

For information on preventing theft of your intellectual property (patents, trademarks and copyrights), you may wish to consult the U.S. Government website, http://www.stopfakes.gov. Part of a Department of Commerce initiative, this website includes self-help "toolkits" giving innovators guidance on how to protect intellectual property in specific countries such as China, Korea and Mexico. For questions regarding patent enforcement issues, applicants may call the U.S. Government hotline at 1-866-999-HALT (1-866-999-4158).

LICENSE FOR FOREIGN FILING UNDER

Title 35, United States Code, Section 184

Title 37, Code of Federal Regulations, 5.11 & 5.15

GRANTED

The applicant has been granted a license under 35 U.S.C. 184, if the phrase "IF REQUIRED, FOREIGN FILING LICENSE GRANTED" followed by a date appears on this form. Such licenses are issued in all applications where the conditions for issuance of a license have been met, regardless of whether or not a license may be required as set forth in 37 CFR 5.15. The scope and limitations of this license are set forth in 37 CFR 5.15(a) unless an earlier license has been issued under 37 CFR 5.15(b). The license is subject to revocation upon written notification. The date indicated is the effective date of the license, unless an earlier license of similar scope has been granted under 37 CFR 5.13 or 5.14.

This license is to be retained by the licensee and may be used at any time on or after the effective date thereof unless it is revoked. This license is automatically transferred to any related applications(s) filed under 37 CFR 1.53(d). This license is not retroactive.

The grant of a license does not in any way lessen the responsibility of a licensee for the security of the subject matter as imposed by any Government contract or the provisions of existing laws relating to espionage and the national security or the export of technical data. Licensees should apprise themselves of current regulations especially with respect to certain countries, of other agencies, particularly the Office of Defense Trade Controls, Department of State (with respect to Arms, Munitions and Implements of War (22 CFR 121-128)); the Bureau of Industry and Security, Department of Commerce (15 CFR parts 730-774); the Office of Foreign AssetsControl, Department of Treasury (31 CFR Parts 500+) and the Department of Energy.

NOT GRANTED

No license under 35 U.S.C. 184 has been granted at this time, if the phrase "IF REQUIRED, FOREIGN FILING LICENSE GRANTED" DOES NOT appear on this form. Applicant may still petition for a license under 37 CFR 5.12, if a license is desired before the expiration of 6 months from the filing date of the application. If 6 months has lapsed from the filing date of this application and the licensee has not received any indication of a secrecy order under 35 U.S.C. 181, the licensee may foreign file the application pursuant to 37 CFR 5.15(b).

SelectUSA

The United States represents the largest, most dynamic marketplace in the world and is an unparalleled location for business investment, innovation, and commercialization of new technologies. The U.S. offers tremendous resources and advantages for those who invest and manufacture goods here. Through SelectUSA, our nation works to promote and facilitate business investment. SelectUSA provides information assistance to the international investor community; serves as an ombudsman for existing and potential investors; advocates on behalf of U.S. cities, states, and regions competing for global investment; and counsels U.S. economic development organizations on investment attraction best practices. To learn more about why the United States is the best country in the world to develop technology, manufacture products, deliver services, and grow your business, visit http://www.SelectUSA.gov or call +1-202-482-6800.

PATENT APPLICATION FEE DETERMINATION RECORD

Substitute for Form PTO-875

Application or Docket Number
13/843,001

APPLICATION AS FILED - PART I

FOR	(Column 1) NUMBER FILED	(Column 2) NUMBER EXTRA	SMALL ENTITY RATE($)	SMALL ENTITY FEE($)	OR	OTHER THAN SMALL ENTITY RATE($)	OTHER THAN SMALL ENTITY FEE($)
BASIC FEE (37 CFR 1.16(a), (b), or (c))	N/A	N/A	N/A	70		N/A	
SEARCH FEE (37 CFR 1.16(k), (i), or (m))	N/A	N/A	N/A	300		N/A	
EXAMINATION FEE (37 CFR 1.16(o), (p), or (q))	N/A	N/A	N/A	360		N/A	
TOTAL CLAIMS (37 CFR 1.16(i))	20 minus 20 =	*	x 40 =	0.00	OR		
INDEPENDENT CLAIMS (37 CFR 1.16(h))	1 minus 3 =	*	x 210 =	0.00			
APPLICATION SIZE FEE (37 CFR 1.16(s))	If the specification and drawings exceed 100 sheets of paper, the application size fee due is $310 ($155 for small entity) for each additional 50 sheets or fraction thereof. See 35 U.S.C. 41(a)(1)(G) and 37 CFR 1.16(s).			0.00			
MULTIPLE DEPENDENT CLAIM PRESENT (37 CFR 1.16(j))				0.00			
* If the difference in column 1 is less than zero, enter "0" in column 2.			TOTAL	730		TOTAL	

APPLICATION AS AMENDED - PART II

		(Column 1) CLAIMS REMAINING AFTER AMENDMENT		(Column 2) HIGHEST NUMBER PREVIOUSLY PAID FOR	(Column 3) PRESENT EXTRA	SMALL ENTITY RATE($)	SMALL ENTITY ADDITIONAL FEE($)	OR	OTHER THAN SMALL ENTITY RATE($)	OTHER THAN SMALL ENTITY ADDITIONAL FEE($)
AMENDMENT A	Total (37 CFR 1.16(i))	*	Minus	**	=	x =		OR	x =	
AMENDMENT A	Independent (37 CFR 1.16(h))	*	Minus	***	=	x =		OR	x =	
AMENDMENT A	Application Size Fee (37 CFR 1.16(s))									
AMENDMENT A	FIRST PRESENTATION OF MULTIPLE DEPENDENT CLAIM (37 CFR 1.16(j))							OR		
						TOTAL ADD'L FEE		OR	TOTAL ADD'L FEE	

		(Column 1) CLAIMS REMAINING AFTER AMENDMENT		(Column 2) HIGHEST NUMBER PREVIOUSLY PAID FOR	(Column 3) PRESENT EXTRA	RATE($)	ADDITIONAL FEE($)		RATE($)	ADDITIONAL FEE($)
AMENDMENT B	Total (37 CFR 1.16(i))	*	Minus	**	=	x =		OR	x =	
AMENDMENT B	Independent (37 CFR 1.16(h))	*	Minus	***	=	x =		OR	x =	
AMENDMENT B	Application Size Fee (37 CFR 1.16(s))									
AMENDMENT B	FIRST PRESENTATION OF MULTIPLE DEPENDENT CLAIM (37 CFR 1.16(j))							OR		
						TOTAL ADD'L FEE		OR	TOTAL ADD'L FEE	

* If the entry in column 1 is less than the entry in column 2, write "0" in column 3.
** If the "Highest Number Previously Paid For" IN THIS SPACE is less than 20, enter "20".
*** If the "Highest Number Previously Paid For" IN THIS SPACE is less than 3, enter "3".
The "Highest Number Previously Paid For" (Total or Independent) is the highest found in the appropriate box in column 1.

UNITED STATES PATENT AND TRADEMARK OFFICE

UNITED STATES DEPARTMENT OF COMMERCE
United States Patent and Trademark Office
Address: COMMISSIONER FOR PATENTS
P.O. Box 1450
Alexandria, Virginia 22313-1450
www.uspto.gov

APPLICATION NUMBER	FILING OR 371(C) DATE	FIRST NAMED APPLICANT	ATTY. DOCKET NO./TITLE
13/843,001	03/15/2013	Nissi Vilcovsky	067055-002000

CONFIRMATION NO. 2550

46188
Nixon Peabody LLP
P.O. Box 60610
Palo Alto, CA 94306

POA ACCEPTANCE LETTER

OC000000061383848

Date Mailed: 05/28/2013

NOTICE OF ACCEPTANCE OF POWER OF ATTORNEY

This is in response to the Power of Attorney filed 05/03/2013.

The Power of Attorney in this application is accepted. Correspondence in this application will be mailed to the above address as provided by 37 CFR 1.33.

/nhassani/

Office of Data Management, Application Assistance Unit (571) 272-4000, or (571) 272-4200, or 1-888-786-0101

UNITED STATES PATENT AND TRADEMARK OFFICE

UNITED STATES DEPARTMENT OF COMMERCE
United States Patent and Trademark Office
Address: COMMISSIONER FOR PATENTS
P.O. Box 1450
Alexandria, Virginia 22313-1450
www.uspto.gov

APPLICATION NUMBER	FILING OR 371(C) DATE	FIRST NAMED APPLICANT	ATTY. DOCKET NO./TITLE
13/843,001	03/15/2013	Nissi Vilcovsky	067055-002000

CONFIRMATION NO. 2550

46188
Nixon Peabody LLP
P.O. Box 60610
Palo Alto, CA 94306

PUBLICATION NOTICE

OC000000063595550

Title:DEVICES, SYSTEMS AND METHODS OF CAPTURING AND DISPLAYING APPEARANCES

Publication No.US-2013-0229482-A1
Publication Date:09/05/2013

NOTICE OF PUBLICATION OF APPLICATION

The above-identified application will be electronically published as a patent application publication pursuant to 37 CFR 1.211, et seq. The patent application publication number and publication date are set forth above.

The publication may be accessed through the USPTO's publically available Searchable Databases via the Internet at www.uspto.gov. The direct link to access the publication is currently http://www.uspto.gov/patft/.

The publication process established by the Office does not provide for mailing a copy of the publication to applicant. A copy of the publication may be obtained from the Office upon payment of the appropriate fee set forth in 37 CFR 1.19(a)(1). Orders for copies of patent application publications are handled by the USPTO's Office of Public Records. The Office of Public Records can be reached by telephone at (703) 308-9726 or (800) 972-6382, by facsimile at (703) 305-8759, by mail addressed to the United States Patent and Trademark Office, Office of Public Records, Alexandria, VA 22313-1450 or via the Internet.

In addition, information on the status of the application, including the mailing date of Office actions and the dates of receipt of correspondence filed in the Office, may also be accessed via the Internet through the Patent Electronic Business Center at www.uspto.gov using the public side of the Patent Application Information and Retrieval (PAIR) system. The direct link to access this status information is currently http://pair.uspto.gov/. Prior to publication, such status information is confidential and may only be obtained by applicant using the private side of PAIR.

Further assistance in electronically accessing the publication, or about PAIR, is available by calling the Patent Electronic Business Center at 1-866-217-9197.

Office of Data Managment, Application Assistance Unit (571) 272-4000, or (571) 272-4200, or 1-888-786-0101

PTO/SB/08a (01-10)
Approved for use through 07/31/2012. OMB 0651-0031
U.S. Patent and Trademark Office; U.S. DEPARTMENT OF COMMERCE
Under the Paperwork Reduction Act of 1995, no persons are required to respond to a collection of information unless it contains a valid OMB control number.

INFORMATION DISCLOSURE STATEMENT BY APPLICANT (Not for submission under 37 CFR 1.99)		
	Application Number	13843001
	Filing Date	2013-03-15
	First Named Inventor	Nissi Vilcovsky
	Art Unit	2656
	Examiner Name	KUNTZ, CURTIS A.
	Attorney Docket Number	067055-002000

U.S.PATENTS						Remove
Examiner Initial*	Cite No	Patent Number	Kind Code[1]	Issue Date	Name of Patentee or Applicant of cited Document	Pages,Columns,Lines where Relevant Passages or Relevant Figures Appear
	1	7948481	B2	2011-05-24	Vilcovsky	
If you wish to add additional U.S. Patent citation information please click the Add button.						Add

U.S.PATENT APPLICATION PUBLICATIONS						Remove
Examiner Initial*	Cite No	Publication Number	Kind Code[1]	Publication Date	Name of Patentee or Applicant of cited Document	Pages,Columns,Lines where Relevant Passages or Relevant Figures Appear
	1	20020196333	A1	2002-12-26	Gorischek	
	2	20030085866	A1	2003-05-08	Bimber et al.	
	3	20050018140	A1	2005-01-27	Ishizaki et al.	
	4	20060178902	A1	2006-08-10	Vicars et al.	
	5	20090091710	A1	2009-04-09	Huebner	

INFORMATION DISCLOSURE STATEMENT BY APPLICANT (Not for submission under 37 CFR 1.99)	Application Number	13843001
	Filing Date	2013-03-15
	First Named Inventor	Nissi Vilcovsky
	Art Unit	2656
	Examiner Name	KUNTZ, CURTIS A.
	Attorney Docket Number	067055-002000

	6	20110199294	A1	2011-08-18	Vilcovsky	

If you wish to add additional U.S. Published Application citation information please click the Add button. Add

FOREIGN PATENT DOCUMENTS Remove

Examiner Initial*	Cite No	Foreign Document Number[3]	Country Code[2] ¡	Kind Code[4]	Publication Date	Name of Patentee or Applicant of cited Document	Pages,Columns,Lines where Relevant Passages or Relevant Figures Appear	T[5]
	1	10031965	DE	A1	2002-01-10	Floegel		☐
	2	19943355	DE	A1	2001-03-15	Benesch		☐
	3	1372092	EP	A1	2003-12-17	Accenture Global Services GMBH		☐
	4	1376207	EP	A1	2004-01-02	Seiko Epson Corp.		☐
	5	00/22955	WO	A1	2000-04-27	Fischer		☐

If you wish to add additional Foreign Patent Document citation information please click the Add button Add

NON-PATENT LITERATURE DOCUMENTS Remove

Examiner Initials*	Cite No	Include name of the author (in CAPITAL LETTERS), title of the article (when appropriate), title of the item (book, magazine, journal, serial, symposium, catalog, etc), date, pages(s), volume-issue number(s), publisher, city and/or country where published.	T[5]
	1	Search Report for European Patent Application No. 06711263.1 dated August 18, 2011.	☐

EFS Web 2.1.17

INFORMATION DISCLOSURE STATEMENT BY APPLICANT (Not for submission under 37 CFR 1.99)		
	Application Number	13843001
	Filing Date	2013-03-15
	First Named Inventor	Nissi Vilcovsky
	Art Unit	2656
	Examiner Name	KUNTZ, CURTIS A.
	Attorney Docket Number	067055-002000

	2	Examination Report for European Patent Application No. 06711263.1 dated June 21, 2012.	☐
	3	2nd Examination Report for European Patent Application No. 06711263.1 dated June 25, 2013.	☐
	4	International Search Report and Written Opinion for PCT/IL2006/000281 mailed on June 12, 2007.	☐
	5	International Preliminary Report on Patentability for PCT/IL2006/000281 mailed on September 20, 2007.	☐
	6	Office Action for U.S. Application No. 13/088,369 mailed on November 2, 2012.	☐
	7	Office Action for U.S. Application No. 13/088,369 mailed on April 9, 2013.	☐
	8	Notice of Allowance for U.S. Application No. 13/088,369 mailed on September 3, 2013.	☐
	9	Office Action for U.S. Application No. 11/817,411 mailed on July 21, 2010.	☐
	10	Notice of Allowance for U.S. Application No. 11/817,411 mailed on February 3, 2011.	☐

If you wish to add additional non-patent literature document citation information please click the Add button Add

EXAMINER SIGNATURE

Examiner Signature		Date Considered	

*EXAMINER: Initial if reference considered, whether or not citation is in conformance with MPEP 609. Draw line through a citation if not in conformance and not considered. Include copy of this form with next communication to applicant.

EFS Web 2.1.17

INFORMATION DISCLOSURE STATEMENT BY APPLICANT (Not for submission under 37 CFR 1.99)	Application Number	13843001
	Filing Date	2013-03-15
	First Named Inventor	Nissi Vilcovsky
	Art Unit	2656
	Examiner Name	KUNTZ, CURTIS A.
	Attorney Docket Number	067055-002000

[1] See Kind Codes of USPTO Patent Documents at www.USPTO.GOV or MPEP 901.04. [2] Enter office that issued the document, by the two-letter code (WIPO Standard ST.3). [3] For Japanese patent documents, the indication of the year of the reign of the Emperor must precede the serial number of the patent document. [4] Kind of document by the appropriate symbols as indicated on the document under WIPO Standard ST.16 if possible. [5] Applicant is to place a check mark here if English language translation is attached.

INFORMATION DISCLOSURE STATEMENT BY APPLICANT (Not for submission under 37 CFR 1.99)		
	Application Number	13843001
	Filing Date	2013-03-15
	First Named Inventor	Nissi Vilcovsky
	Art Unit	2656
	Examiner Name	KUNTZ, CURTIS A.
	Attorney Docket Number	067055-002000

CERTIFICATION STATEMENT

Please see 37 CFR 1.97 and 1.98 to make the appropriate selection(s):

☐ That each item of information contained in the information disclosure statement was first cited in any communication from a foreign patent office in a counterpart foreign application not more than three months prior to the filing of the information disclosure statement. See 37 CFR 1.97(e)(1).

OR

☐ That no item of information contained in the information disclosure statement was cited in a communication from a foreign patent office in a counterpart foreign application, and, to the knowledge of the person signing the certification after making reasonable inquiry, no item of information contained in the information disclosure statement was known to any individual designated in 37 CFR 1.56(c) more than three months prior to the filing of the information disclosure statement. See 37 CFR 1.97(e)(2).

☐ See attached certification statement.

☐ The fee set forth in 37 CFR 1.17 (p) has been submitted herewith.

☒ A certification statement is not submitted herewith.

SIGNATURE

A signature of the applicant or representative is required in accordance with CFR 1.33, 10.18. Please see CFR 1.4(d) for the form of the signature.

Signature	/Joseph Bach/	Date (YYYY-MM-DD)	2013-12-03
Name/Print	Joseph Bach	Registration Number	37771

This collection of information is required by 37 CFR 1.97 and 1.98. The information is required to obtain or retain a benefit by the public which is to file (and by the USPTO to process) an application. Confidentiality is governed by 35 U.S.C. 122 and 37 CFR 1.14. This collection is estimated to take 1 hour to complete, including gathering, preparing and submitting the completed application form to the USPTO. Time will vary depending upon the individual case. Any comments on the amount of time you require to complete this form and/or suggestions for reducing this burden, should be sent to the Chief Information Officer, U.S. Patent and Trademark Office, U.S. Department of Commerce, P.O. Box 1450, Alexandria, VA 22313-1450. DO NOT SEND FEES OR COMPLETED FORMS TO THIS ADDRESS. **SEND TO: Commissioner for Patents, P.O. Box 1450, Alexandria, VA 22313-1450.**

Privacy Act Statement

The Privacy Act of 1974 (P.L. 93-579) requires that you be given certain information in connection with your submission of the attached form related to a patent application or patent. Accordingly, pursuant to the requirements of the Act, please be advised that: (1) the general authority for the collection of this information is 35 U.S.C. 2(b)(2); (2) furnishing of the information solicited is voluntary; and (3) the principal purpose for which the information is used by the U.S. Patent and Trademark Office is to process and/or examine your submission related to a patent application or patent. If you do not furnish the requested information, the U.S. Patent and Trademark Office may not be able to process and/or examine your submission, which may result in termination of proceedings or abandonment of the application or expiration of the patent.

The information provided by you in this form will be subject to the following routine uses:

1. The information on this form will be treated confidentially to the extent allowed under the Freedom of Information Act (5 U.S.C. 552) and the Privacy Act (5 U.S.C. 552a). Records from this system of records may be disclosed to the Department of Justice to determine whether the Freedom of Information Act requires disclosure of these record s.

2. A record from this system of records may be disclosed, as a routine use, in the course of presenting evidence to a court, magistrate, or administrative tribunal, including disclosures to opposing counsel in the course of settlement negotiations.

3. A record in this system of records may be disclosed, as a routine use, to a Member of Congress submitting a request involving an individual, to whom the record pertains, when the individual has requested assistance from the Member with respect to the subject matter of the record.

4. A record in this system of records may be disclosed, as a routine use, to a contractor of the Agency having need for the information in order to perform a contract. Recipients of information shall be required to comply with the requirements of the Privacy Act of 1974, as amended, pursuant to 5 U.S.C. 552a(m).

5. A record related to an International Application filed under the Patent Cooperation Treaty in this system of records may be disclosed, as a routine use, to the International Bureau of the World Intellectual Property Organization, pursuant to the Patent Cooperation Treaty.

6. A record in this system of records may be disclosed, as a routine use, to another federal agency for purposes of National Security review (35 U.S.C. 181) and for review pursuant to the Atomic Energy Act (42 U.S.C. 218(c)).

7. A record from this system of records may be disclosed, as a routine use, to the Administrator, General Services, or his/her designee, during an inspection of records conducted by GSA as part of that agency's responsibility to recommend improvements in records management practices and programs, under authority of 44 U.S.C. 2904 and 2906. Such disclosure shall be made in accordance with the GSA regulations governing inspection of records for this purpose, and any other relevant (i.e., GSA or Commerce) directive. Such disclosure shall not be used to make determinations about individuals.

8. A record from this system of records may be disclosed, as a routine use, to the public after either publication of the application pursuant to 35 U.S.C. 122(b) or issuance of a patent pursuant to 35 U.S.C. 151. Further, a record may be disclosed, subject to the limitations of 37 CFR 1.14, as a routine use, to the public if the record was filed in an application which became abandoned or in which the proceedings were terminated and which application is referenced by either a published application, an application open to public inspections or an issued patent.

9. A record from this system of records may be disclosed, as a routine use, to a Federal, State, or local law enforcement agency, if the USPTO becomes aware of a violation or potential violation of law or regulation.

Espacenet

Bibliographic data: DE10031965 (A1) — 2002-01-10

Electric mirror has visual display screen with greater than 30-inch diameter mounted on end and with digital camera preferably integrated into housing, uses computer technology for display

No documents available for this priority number.

Inventor(s): FLOEGEL EBERHARD [DE] + (FLOEGEL, EBERHARD)

Applicant(s): FLOEGEL EBERHARD [DE] + (FLOEGEL, EBERHARD)

Classification: **- international:** ***H04N7/18;*** (IPC1-7): H04N1/00
- cooperative: **H04N7/18**; A47F2007/195

Application number: DE2000131965 20000630

Priority number(s): DE2000131965 20000630

Abstract of DE10031965 (A1)

The device has a visual display screen (1) with a greater than 30 inch diameter mounted on end and with a digital camera (3) preferably integrated into its housing so that using computer technology the image sequence acquired by the camera can be shown on the screen and the device can be used as a replacement for a mirror or as an electric mirror for use in trying on clothes. Independent claims are also included for the following: a visual display screen for an electric mirror.

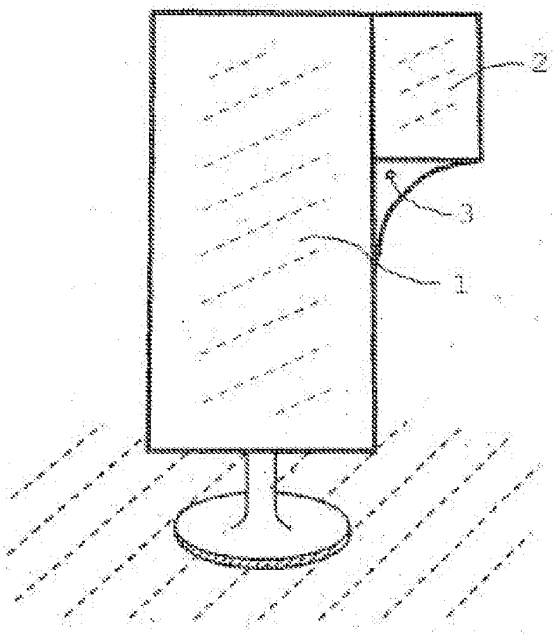

Last updated: 09.10.2013 Worldwide Database 5.8.11.5; 93p

(19) BUNDESREPUBLIK DEUTSCHLAND

DEUTSCHES PATENT- UND MARKENAMT

(12) **Offenlegungsschrift**

(10) **DE 100 31 965 A 1**

(51) Int. Cl.[7]: **H 04 N 1/00**

(21) Aktenzeichen: 100 31 965.3
(22) Anmeldetag: 30. 6. 2000
(43) Offenlegungstag: 10. 1. 2002

DE 100 31 965 A 1

(71) Anmelder:
Floegel, Eberhard, 30161 Hannover, DE

(72) Erfinder:
gleich Anmelder

Die folgenden Angaben sind den vom Anmelder eingereichten Unterlagen entnommen

(54) Elektrospiegel

(57) Die Erfindung bezieht sich auf Bildschirme (1), die mittels einer eingebauten Kamera (3) als Spiegelersatz eingesetzt werden - insbesondere in Bekleidungsgeschäften und Kaufhäusern.
Über die Spiegelfunktion hinaus kann die Darstellung durch eine entsprechende Software u. a. bezüglich Farbe, Muster, Stoffart und Schnitt des getragenen Kleidungsstückes manipuliert werden. Ebenso kann die Farbdarstellung auf Tageslicht umgestellt werden.
Die Software sorgt auch dafür, daß die sich betrachtende Person stets in der vollen möglichen Größe auf dem Bildschirm dargestellt wird, unabhängig von der Entfernung zum Bildschirm.
Die Darstellung wird gespeichert, so daß vorhergehende Anproben jederzeit eingeblendet werden können. Diese gespeicherten Anproben können ebenfalls wie vorstehend manipuliert werden.
In einem zweiten Schritt kann die dargestellte Person per Software mit anderen Kleidungsstücken gezeigt werden.
Informationen zum Kleidungsstück können zusätzlich auf einem kleineren Display (2) angezeigt werden.
Alle Funktionen sind über eine Fernbedienung steuerbar.
Die Erfindung eignet sich insbesondere auch für Production-on-demand.

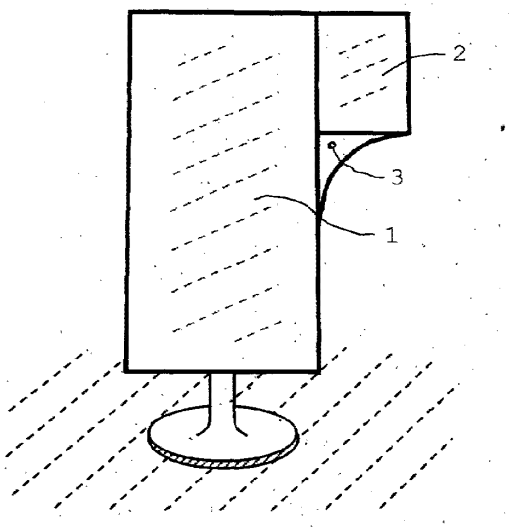

DE 100 31 965 A 1

Beschreibung

[0001] Die Erfindung bezieht sich auf Bildschirme die mittels einer eingebauten Kamera als Spiegelersatz eingesetzt werden – insbesondere in Bekleidungsgeschäften und Kaufhäusern.

[0002] Derartige Spiegel – hier Elektrospiegel genannt – sind bis dato nicht bekannt. Bekannt sind dagegen PC-Programme, die z. B. in Frisiersalons den Kunden verschiedene Frisurvorschläge auf dem Bildschirm darstellen können.

[0003] Die Aufgabe dieser Erfindung ist es jedoch, die Anprobe von Bekleidungsstücken zu erleichtern und zu unterstützen.

[0004] Dabei wird bei der erfindungsgemäßen Lösung die Funktion eines Ganzkörperspiegels durch einen Bildschirm im Hochformat nicht nur vollständig ersetzt, sondern durch die folgende Möglichkeiten wesentlich erweitert:
Das getragene Kleidungsstück kann auf dem Bildschirm mittels entspr. Software in Farbe, Muster, Stoffart und Schnitt abgeändert dargestellt werden – letzteres gilt z. B. auch für erforderliche Längenänderungen. Ebenso kann die Farbdarstellung unter Tageslichtbedingungen simuliert werden.

[0005] Die Software sorgt auch dafür, daß die sich betrachtende Person stets in der vollen möglichen Größe auf dem Bildschirm dargestellt wird, unabhängig von der Entfernung zum Bildschirm.

[0006] Die Darstellung wird gespeichert, so daß vorhergehende Anproben jederzeit eingeblendet werden können. Diese gespeicherten Anproben können ebenfalls wie vorstehend manipuliert werden.

[0007] In einem zweiten Schritt kann die dargestellte Person per Software mit anderen Kleidungsstücken gezeigt werden.

[0008] Informationen zum Kleidungsstück können zusätzlich auf einem kleinen Display angezeigt werden.

[0009] Die Bedienung erfolgt über dieses Display oder über eine Fernbedienung.

[0010] Aus dieser erweiterten Funktionalität ergeben sich zahlreiche Vorteile:

- verschiedene Versionen eines Kleidungsstückes erfordern kein mehrfaches Anprobieren;
- Stoffversionen, die nicht am Lager oder in der betr. Größe vorhanden sind, können trotzdem quasi anprobiert werden;
- in der erweiterten Version ist auch die Darstellung von Kleidungsstücken ohne das Anprobieren möglich;
- erforderliche Längenänderungen können in ihrer Auswirkung sofort dargestellt und vom Kunden begutachtet werden;
- die Wiederholbarkeit der Aufzeichnungen einer vorhergehenden Anprobe ermöglicht dem Kunden den direkten Vergleich;
- dadurch, daß die gesamte Funktionalität auch auf eine gespeicherte Anprobe angewendet werden kann, ist eine Darstellung der gewünschten Kleidungsstücke auch ganz ohne neuerliche Anprobe möglich.

[0011] Mit der betr. Software kann insbesondere auch Production-on-demand unterstützt werden, indem die Bestelldaten direkt elektronisch weitergeleitet werden. Hierzu wäre es dann zusätzlich erforderlich, daß die Kundenmaße im System gespeichert sind – möglichst ermittelt durch einen Ganzkörper-Scanner.

[0012] Anhand der Zeichnung wird ein derartiger Elektrospiegel – auf rein schematische Weise bezüglich seiner äußeren Form – näher veranschaulicht:

Dabei ist der Elektrospiegel **1** – nach heutiger Technik vorzugsweise ein Plasmabildschirm – auf einem Drehgestell **4** hochkant montiert, und trägt seitlich ein kleineres Display **2** unter dem auch die Kamera **3** plaziert ist.

[0013] Die Größe des Plasmabildschirmes **1** beträgt vorzugsweise zumindest 45 × 90 cm.

[0014] Die Erfindung ist nicht auf die dargestellte Ausführungsform beschränkt. Insbesondere kann Form, Größe und Plazierung des Elektrospiegels – z. B. auch in Wandaufhängung – variiert werden.

Patentansprüche

1. Bildschirm mit vorzugsweise mehr als 30-Zoll-Diagonale, **dadurch gekennzeichnet**, daß dieser (**1**) hochkant montiert ist und eine vorzugsweise im Gehäuse integrierte digitale Kamera (**3**) aufweist, derart, daß mittels Computertechnik die von der Kamera aufgenommene Bildsequenz so auf dem Bildschirm (**1**) dargestellt wird, daß dieser als Spiegelersatz – hier Elektrospiegel genannt – dienen kann, insbesondere für Bekleidungsanproben.
2. Elektrospiegel nach Anspruch 1, dadurch gekennzeichnet, daß die sich betrachtende Person vorzugsweise stets so groß wie möglich auf dem Bildschirm (**1**) dargestellt wird, unabhängig von der Entfernung zwischen dieser Person und dem Bildschirm.
3. Elektrospiegel nach Anspruch 1, dadurch gekennzeichnet, daß eine auf diese Weise gefilmte Anprobe gespeichert und wiederholt auf dem Bildschirm (**1**) eingeblendet werden kann.
4. Elektrospiegel nach Anspruch 1, dadurch gekennzeichnet, daß die Farbdarstellung auf dem Bildschirm (**1**) entsprechend den Tageslichtbedingungen erfolgen kann.
5. Elektrospiegel nach Anspruch 1, dadurch gekennzeichnet, daß ein Kleidungsstück der auf dem Bildschirm (**1**) dargestellten Person bezüglich Farbe und/oder Muster und/oder Stoffart und/oder Schnitt und/oder erforderlicher Längenänderungen geändert auf dem Bildschirm (**1**) dargestellt werden kann.
6. Elektrospiegel nach Anspruch 1, dadurch gekennzeichnet, daß die betr. Person auch mit anderen Kleidungsstücken als sie gerade trägt auf dem Bildschirm (**1**) dargestellt werden kann.
7. Elektrospiegel nach einem der vorangehenden Ansprüche, dadurch gekennzeichnet, daß die in diesen Ansprüchen beschriebenen Funktionen zumindest teilweise auch für gespeicherte Anproben entsprechend durchgeführt werden können.
8. Elektrospiegel nach einem der vorangehenden Ansprüche, dadurch gekennzeichnet, daß Informationen zu den dargestellten Kleidungsstücken auf einem zusätzlichen kleineren Display (**2**) angezeigt werden können.
9. Elektrospiegel nach einem der vorangehenden Ansprüche, dadurch gekennzeichnet, daß vorzugsweise alle Funktionen auch über eine Fernbedienung gesteuert werden können.

Hierzu 1 Seite(n) Zeichnungen

- Leerseite -

Nummer: **DE 100 31 965 A1**
Int. Cl.[7]: **H 04 N 1/00**
Offenlegungstag: 10. Januar 2002

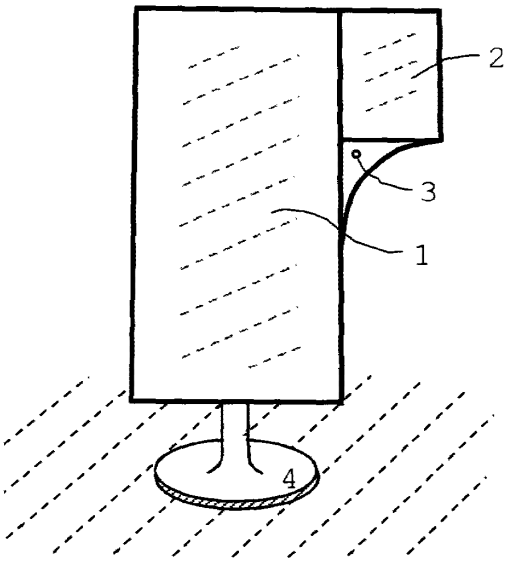

Microsoft Ex. 1002 - Page 107 of 451

Espacenet

Bibliographic data: DE19943355 (A1) — 2001-03-15

Display material is formed by front partially-reflective layer and rear layer carrying information made visible by backlighting, hence forming composite acting as mirror or display

No documents available for this priority number.

Inventor(s): BENESCH MARKUS [DE] ± (BENESCH, MARKUS)

Applicant(s): BENESCH MARKUS [DE] ± (BENESCH, MARKUS)

Classification: **- international:** ***G09F13/12;*** (IPC1-7): G09F9/00
- cooperative: **G09F13/12**

Application number: DE1999143355 19990910

Priority number(s): DE1999143355 19990910

Abstract of DE19943355 (A1)

The front layer (1) is partially-reflective layer. Behind it is a display layer (2), on which information is seen when illuminated actively or passively. Light incident on the reflective layer from the front, is largely reflected, as from a mirror. Illumination of the display layer, reveals its information to a viewer at the front.

Last updated: 09.10.2013 Worldwide Database 5.8.11.5; 93p

(19) BUNDESREPUBLIK DEUTSCHLAND

DEUTSCHES PATENT- UND MARKENAMT

(12) **Offenlegungsschrift**

(10) **DE 199 43 355 A 1**

(51) Int. Cl.[7]: **G 09 F 9/00**

(21) Aktenzeichen: 199 43 355.0
(22) Anmeldetag: 10. 9. 1999
(43) Offenlegungstag: 15. 3. 2001

DE 199 43 355 A 1

(71) Anmelder:
Benesch, Markus, 80538 München, DE

(74) Vertreter:
Schwabe, Sandmair, Marx, 81677 München

(72) Erfinder:
gleich Anmelder

(56) Für die Beurteilung der Patentfähigkeit in Betracht zu ziehende Druckschriften:

DE	94 01 801 U1
GB	21 41 280 A
US	56 57 563
US	47 47 223
WO	95 23 401 A1

Die folgenden Angaben sind den vom Anmelder eingereichten Unterlagen entnommen

(54) Reflektierendes Material mit Displayfunktion, Vorrichtung, die ein solches Material umfaßt

(57) Die Erfindung betrifft ein Material, insbesondere Verbundmaterial, mit Doppelfunktion, das zugleich als Spiegel und als Informationsanzeigevorrichtung verwendet werden kann.
Das reflektierende Material mit Displayfunktion umfaßt eine reflektierende Schicht und eine auf einer Rückseite der reflektierenden Schicht angeordnete Informationsanzeigeschicht, um mittels aktiver oder passiver Ausleuchtung Information darzubieten, bei welchem Material die reflektierende Schicht zumindest abschnittsweise ein partielles Reflexionsvermögen aufweist, das so gewählt ist, daß die reflektierende Schicht Licht, das von der Vorderseite auf die reflektierende Schicht auftrifft, überwiegend reflektiert, um als Spiegel zu wirken, daß jedoch bei Ausleuchtung der Informationsanzeigeschicht Information von der Vorderseite der reflektierenden Schicht her sichtbar ist.

DE 199 43 355 A 1

Microsoft Ex. 1002 - Page 109 of 451

Beschreibung

Die vorliegende Erfindung betrifft ein reflektierendes Material mit Displayfunktion und bevorzugte Verwendungsformen eines solchen Materials, insbesondere in Vorrichtungen mit elektrischer Ausleuchtung.

Spiegel und Materialien mit reflektierender Oberfläche finden in der Technik und im Design vielfach Anwendung. In der Regel sind Spiegel bzw. Materialien mit reflektierender Oberfläche nur für den Zweck ausgelegt, einfallendes Licht geeignet zu reflektieren. Für moderne Bürogebäude sind auch verspiegelte Oberflächen bekannt, die zwar im sichtbaren Spektralbereich überwiegend reflektierend sind, die jedoch im infraroten Spektralbereich weitgehend intransparent sind. Übliche Materialien mit reflektierender Oberfläche sind somit in ihrer Funktionalität erheblich eingeschränkt.

In der Technik sind auch viele Arten von Informationsanzeigevorrichtungen bekannt, beispielsweise Bildschirme, LED-Displays, LCD-Displays etc. Die dem Betrachter sichtbare Oberfläche solcher Informationsanzeigevorrichtungen genügt jedoch häufig nicht den Anforderungen des modernen Designs und können insbesondere nicht als Spiegel eingesetzt werden.

Aufgabe der vorliegenden Erfindung ist es, ein Material, insbesondere Verbundmaterial, zu schaffen, das zugleich als Spiegel und als Informationsanzeige verwendet werden kann. Eine weitere Aufgabe der vorliegenden Erfindung ist es, bevorzugte Anwendungen des erfindungsgemäßen Materials zu schaffen.

Diese Aufgabe wird gelöst durch ein Material mit den Merkmalen nach Anspruch 1 sowie durch eine Vorrichtung nach einem der Ansprüche 23 bis 26, 28, 29 und 31. Vorteilhafte Weiterbildungen sind Gegenstand der rückbezogenen Unteransprüche.

Gemäß der Erfindung wird ein Material, insbesondere ein Verbundmaterial, geschaffen, das eine reflektierende Schicht und eine Informationsanzeigeschicht umfaßt. Die reflektierende Schicht dient als Spiegel, um insbesondere im sichtbaren Spektralbereich Licht, das von einer Vorderseite bzw. Betrachtungsseite aus auf das Material einfällt, zurück zu reflektieren. Die Informationsanzeigeschicht ist gemäß der Erfindung auf der Rückseite der reflektierenden Schicht angeordnet, d. h. bei bestimmungsgemäßer Verwendung des Materials auf der der Betrachtungsseite des Materials abgewandten Seite des Materials.

Die Informationsanzeigeschicht bietet mittels aktiver oder passiver Ausleuchtung Information in Form eines Lichtmusters mit Helligkeits- und/oder Farbunterschieden dar, die insbesondere im sichtbaren Spektralbereich dargeboten werden.

Die reflektierende Schicht des erfindungsgemäßen Materials weist ein partielles Reflexionsvermögen auf, d. h. Licht, das auf die reflektierende Schicht auftrifft, wird von dieser nur zum Teil reflektiert, der übrige Teil des Lichts wird transmittiert. Somit kann das Lichtmuster, das von der Informationsanzeigeschicht dargeboten wird, die reflektierende Schicht teilweise durchdringen, um auf der Oberfläche der reflektierenden Schicht als Information wahrgenommen werden zu können.

Gemäß der Erfindung wird deshalb ein Material mit doppelter Funktion geschaffen. Das Material kann einerseits als Spiegel verwendet werden und andererseits als Informationsanzeige. Gemäß der Erfindung können beide Funktionen auf engstem Raum und mit ein- und demselben Material realisiert werden, so daß Platz und Herstellungs- und Betriebskosten eingespart werden können.

Das erfindungsgemäße Material kann vielfältig dort eingesetzt werden, wo aus funktionellen Gründen eine Informationsanzeige gewünscht ist, wo aber gleichzeitig, beispielsweise aus ästhetischen Gründen, eine spiegelnde Oberfläche gewünscht ist.

Diese Doppelfunktion kann vielfältig ausgenutzt werden. Viele in der Technik eingesetzten Informationsanzeigen wirken insbesondere im ausgeschalteten Zustand unästhetisch. Dies gilt beispielsweise für LED-Anzeigen, auf denen man selbst im ausgeschalteten Zustand die Ziffernfelder ohne weiteres erkennen kann. Gemäß der Erfindung ist die Oberfläche solcher Informationsanzeigevorrichtungen verspiegelt, was den ästhetischen Gesamteindruck deutlich verbessert. Gemäß der Erfindung entfällt somit der störende ästhetische Gesamteindruck von Informationsanzeigen vollständig.

Gemäß der vorliegenden Erfindung kann auf der verspiegelten Oberfläche des Materials Information völlig unerwartet für einen Betrachter eingeblendet werden. Dies gilt umso mehr, als es ungewöhnlich ist, daß auf einer reflektierenden Oberfläche Information dargestellt wird. Diese überraschende Wirkung kann dazu genutzt werden, um die Aufmerksamkeit des Betrachters umso mehr auf die dargestellte Information zu lenken. Das erfindungsgemäße Material eignet sich deshalb insbesondere zu Werbezwecken oder Warnzwecken.

Unter dem Begriff passive Ausleuchtung wird nachfolgend insbesondere die Ausleuchtung der Informationsanzeigeschicht mittels einer auf der Rückseite der Informationsanzeigeschicht befindlichen Lichtquelle verstanden, die zweckmäßig zu jedem beliebigen Zeitpunkt zuschaltbar ist und vorzugsweise Licht mit variabler Intensität bereitstellen kann. Bei dieser Ausführungsform bietet die Informationsanzeigeschicht zur Darstellung von Information Abschnitte unterschiedlicher Transmission und/oder unterschiedlichem spektralem Absorptionsvermögen dar, die Licht, das von der Lichtquelle auf die Informationsanzeigeschicht auftrifft und diese durchdringt, in der Intensität und/oder Farbe unterschiedlich modulieren.

Unter dem Begriff aktive Ausleuchtung wird nachfolgend insbesondere verstanden, daß zumindest einzelne Abschnitte der Informationsanzeigeschicht aufgrund eines elektrischen Mechanismus selbsttätig Licht emittieren können, wie dies beispielsweise für LED-Arrays bekannt ist.

Weitere Einzelheiten zur aktiven oder passiven Ausleuchtung der Informationsanzeigeschicht werden nachfolgend unter Bezugnahme auf bevorzugte Ausführungsformen noch ausführlicher beschrieben werden.

Damit Licht von der Rückseite des Materials, d. h. von der der Betrachtungs- bzw. Vorderseite abgewandten Seite des Materials, zur Betrachtungsseite gelangen kann, weist die reflektierende Schicht gemäß der vorliegenden Erfindung ein partielles Reflexionsvermögen auf, d. h. ein Reflexionsvermögen von weniger als 100 Prozent. Die reflektierende Schicht braucht jedoch nicht auf der gesamten Oberfläche ein solches partielles Reflexionsvermögen aufweisen. Ein partielles Reflexionsvermögen ist nur an solchen Abschnitten erforderlich, an denen Information tatsächlich dargestellt werden soll.

Infolge der aktiven oder passiven Ausleuchtung der Informationsanzeigeschicht fällt Licht von der Seite der Informationsanzeigeschicht her auf die reflektierende Schicht auf, durchdringt diese teilweise und kann dann von der Betrachtungsseite des Materials aus bzw. auf der reflektierenden Schicht wahrgenommen werden.

Als Information kann gemäß der Erfindung jegliche Bewegt- und/oder Standbildinformation dargestellt werden. Beispiele für Bewegtbildinformation sind Videobildsequenzen, Fernsehbildinformation, technische Anzeigen mit zeit-

lich variablem Inhalt, beispielsweise Zeichen- und/oder Ziffernanzeigen oder Datums- und/oder Zeitinformation, jeweils in schwarzweiß und/oder Farbe. Beispiele für Standbildinformation sind statische Darstellungen von Motiven in schwarzweiß und/oder Farbe, technische Informationen, wie beispielsweise Zeichen- und/oder Ziffernanzeigen, aber auch Texturen oder Strukturierungen von Materialien, die hinter der reflektierenden Schicht angeordnet sind.

Das Reflexionsvermögen der reflektierenden Schicht wird zumindest in dem Spektralbereich, in dem die Information mittels Licht einer vorgegebenen Wellenlänge bzw. Wellenlängenverteilung dargestellt werden soll, so gewählt, daß Licht, das von der Vorder- bzw. Betrachtungsseite des Materials aus auf die reflektierende Schicht auftrifft, ausreichend reflektiert wird, so daß die reflektierende Schicht als Spiegel mit einem zufriedenstellenden Reflexionsvermögen funktioniert. Andererseits ist das Reflexionsvermögen der reflektierenden Schicht auch so gewählt, daß ausreichend viel Licht, das die darzustellende Information verkörpert, die reflektierende Schicht von der Materialrückseite aus durchdringen kann und auf der Vorder- bzw. Betrachtungsseite des Materials deutlich als Information wahrgenommen werden kann. Das Reflexionsvermögen der reflektierenden Schicht unterliegt insofern einem gewissen Kompromiß, was von verschiedenen Faktoren abhängt, beispielsweise davon, wie lichtstark die Ausleuchtung der Informationsanzeigeschicht ist, wie hell der Vordergrund des Materials beim bestimmungsgemäßen Gebrauch ist und wie lichtstark die Information auf der reflektierenden Schicht eingeblendet werden soll.

Vorzugsweise liegt das Reflexionsvermögen der reflektierenden Schicht zumindest in dem Spektralbereich, in dem die Information mittels Licht einer vorgegebenen Wellenlänge bzw. Wellenlängenverteilung dargestellt werden soll, im Bereich von 75 bis 95 Prozent, insbesondere im Bereich von 85 bis 95 Prozent.

Bevorzugt ist das Reflexionsvermögen der reflektierenden Schicht im gesamten sichtbaren Spektralbereich im wesentlichen konstant. Ein solches Reflexionsvermögen kann durch metallisches Bedampfen einer Oberfläche oder durch Beschichten mit einer dielektrischen Vielfachbeschichtung, insbesondere mit einer Anzahl von dielektrischen Schichten mit einer Dicke von jeweils etwa einem Viertel der Wellenlänge von Licht im relevanten Spektralbereich, erreicht werden.

Das im sichtbaren Spektralbereich gewählte Reflexionsvermögen kann sich auch bis in den infraroten Spektralbereich fortsetzen. Es kann jedoch auch bevorzugt sein, daß die reflektierende Schicht im infraroten Spektralbereich sehr viel durchlässiger als im sichtbaren Spektralbereich ist, um einer übermäßigen Erwärmung der Informationsanzeigeschicht bei der Ausleuchtung entgegenzuwirken.

Damit das Reflexionsvermögen der reflektierenden Schicht nicht durch Hintergrundreflexionen hinter der reflektierenden Schicht beeinträchtigt wird, wird es bevorzugt, daß zumindest die der reflektierenden Schicht zugewandte Oberfläche der Informationsanzeigeschicht mit einer Antireflexionsbeschichtung, wie sie beispielsweise von Brillen her bekannt ist, insbesondere mit dielektrischen Mehrfachschichten, versehen ist. Bevorzugt wird ferner, daß die Informationsanzeigeschicht dann, wenn diese nicht ausgeleuchtet wird, einen dunklen Hintergrund darbietet, so daß möglichst kein störendes Licht von der Rückseite der reflektierenden Schicht her zu deren Vorderseite gelangen kann. Zu diesem Zweck kann die Rückseite der Informationsanzeigeschicht auch mit einer Licht diffus streuenden Oberfläche versehen sein.

Bevorzugt ist die reflektierende Schicht unmittelbar mit der Informationsanzeigeschicht zu einem Verbundmaterial mit Sandwich-Struktur verbunden. Es kann jedoch auch ein Spalt zwischen den beiden Schichten vorgesehen sein. Bei letztgenannter Ausführungsform wird es bevorzugt, daß der Spalt stirnseitig lichtdicht abgeschlossen ist, so daß in den Spalt im wesentlichen kein Licht seitlich einfallen kann, das sonst durch die Abschnitte der reflektierende Schicht mit dem partiellen Reflexionsvermögen auf der Materialvorderseite sichtbar wäre.

Bei einer ersten Ausführungsform, insbesondere mit passiver Ausleuchtung der Informationsanzeigeschicht, ist die Informationsanzeigeschicht als transparentes bzw. semitransparentes Material ausgebildet, daß zur Darstellung von Information Abschnitte mit unterschiedlicher Transmission aufweist. Wird eine solche Schicht rückseitig mittels einer Lichtquelle ausgeleuchtet, so wird das die Informationsanzeigeschicht durchdringende Licht von den Abschnitten mit unterschiedlicher Transparenz intensitätsmoduliert, so daß dem Lichtstrom eine Information aufgeprägt wird. Die Transparenz des Materials kann für alle Wellenlängen im sichtbaren Spektralbereich gleichmäßig sein, sie kann jedoch auch spektral verschieden sein, so daß dem Lichtstrom neben Graustufeninformation zusätzlich auch ein Farbmuster als Information aufgeprägt werden kann.

Besonders bevorzugt umfaßt das transparente bzw. semitransparente Material der Informationsanzeigeschicht einen geeigneten Kunststoffilm, beispielsweise in der Art von Schwarweiß- oder Farbnegativfilmen, insbesondere einen sogenannten Backlightfilm. Bei dem transparenten bzw. semitransparenten Material der Informationsanzeigeschicht kann es sich jedoch auch um eine Glas- oder Kunststoffschicht handeln, die entweder oberflächlich mit einem Graustufen- oder Farbmuster versehen ist, beispielsweise durch Anätzen und/oder Einfärben der Oberfläche, oder die im Material selbst Graustufen- oder Farbmuster aufweist, beispielsweise hervorgerufen durch Einlagerungen. Eine solche Glas- oder Kunststoffschicht weist vorzugsweise eine Licht diffus streuende Oberfläche auf, so daß Licht, das durch die reflektierende Schicht hindurchgelangt, nicht direkt zurückreflektiert wird. Schließlich kann die Informationsanzeigeschicht auch ein anderes transparentes bzw. semitransparentes Material umfassen, das einem Lichtstrom Intensitäts- oder Farbmuster aufprägen kann, beispielsweise ein vergleichsweise grobmaschiges Textil mit einer Gewebestrukturierung oder eine vergleichsweise dünne eingeschwärzte und/oder eingefärbte Pappenbahn.

Bei einer weiteren Ausführungsform umfaßt die Informationsanzeigeschicht eine Matrix bzw. einen Array aus lichtemittierenden Polymeren. Von solchen Polymeren ist bekannt, daß diese ähnlich wie Halbleiter eine Bandlücke aufweisen, so daß bei Anlegen einer geeigneten Spannung von dem Kunststoff Licht emittiert wird. Im Stand der Technik sind auch bereits Arrays aus lichtemittierenden Polymeren bekannt, die einzeln ansteuerbare Felder in der Art einer LED-Matrix aufweisen, denen jeweils eine Steuerelektrode zugeordnet ist. Vorzugsweise weist die Rückseite einer solchen Matrix eine Licht diffus streuende Oberfläche auf.

Die vorgenannten Materialien für die Informationsanzeigeschicht können auch plastisch, beispielsweise durch Wärmebeaufschlagung, zu einer beliebigen dreidimensionalen Form geformt sein. Besonders bevorzugt wird eine plastische Verformung bei Lampenschirmen oder Lampensäulen, die mit einem erfindungsgemäßen Material beschichtet bzw. versehen sind.

Bei dieser Ausführungsform kann die reflektierende Schicht in Form einer metallischen oder dielektrischen Beschichtung unmittelbar auf die Informationsanzeigeschicht aufgebracht sein, beispielsweise unmittelbar auf einen

Kunststoffilm oder eine Matrix aus lichtemittierenden Polymeren. Auf diese Weise können die Herstellungskosten des Materials noch weiter gesenkt werden.

Die reflektierende Schicht kann auch auf einem separaten transparenten Material aufgebracht sein, das mit der Informationsanzeigeschicht zu einem flächigen Verbundmaterial verbunden ist, beispielsweise einem Laminat mit Sandwich-Struktur. Insbesondere kann die reflektierende Schicht unmittelbar auf der Oberfläche einer Kunststoffschicht ausgebildet ist, beispielsweise durch Bedampfen mit einer Metallschicht oder einer dielektrischen Vielfachschicht. Vorzugsweise ist die Kunststoffschicht mit der Informationsanzeigeschicht thermoverschweißt oder mittels Verkleben als Laminatmaterial ausgebildet.

Bei einer anderen bevorzugten Ausführungsform ist die Informationsanzeigeschicht so ausgelegt, daß zumindest ein Abschnitt von dieser aktiv ausleuchtbar ist. Beispiele für aktiv ausleuchtbare Informationsanzeigeschichten sind Bildschirme, insbesondere lichtstarke Plasmabildschirme, LCD-Displays, die für Durchlichtbetrieb mit Hintergrundausleuchtung ausgelegt sind, wie diese beispielsweise von der Ansteuerung von Overhead-Projektoren mittels Computer her bekannt sind, eine Schicht, die eine Matrix bzw. ein Array aus LEDs umfaßt, etc.

Bei dieser Ausführungsform kann die reflektierende Schicht, insbesondere eine metallische oder dielektrische Vielfachbeschichtung, unmittelbar auf der Oberfläche der Informationsanzeigeschicht ausgebildet sein. Weil solche Informationsanzeigen jedoch häufig als Fertigkomponenten zugekauft werden soll, wird es bevorzugt, daß die reflektierende Schicht auf der Oberfläche einer Glas- oder Kunststoffschicht oder einer anderen geeigneten transparenten Schicht ausgebildet ist. Diese Schicht ist dann beispielsweise durch Verkleben, Laminieren oder eine andere geeignete Verbindungstechnik mit der Informationsanzeigeschicht verbunden.

Für LEDs aber auch lichtemittierende Polymere ist es charakteristisch, daß die Lichtemission in einem vergleichsweise schmalbandigen Spektralbereich erfolgt, beispielsweise im roten Spektralbereich. Deshalb wird bei einer weiteren bevorzugten Ausführungsform das spektrale Reflexionsvermögen der reflektierenden Schicht gerade so gewählt, daß dieses in dem schmalbandigen Emissionswellenlängenbereich ein vergleichbar schmalbandiges Minimum aufweist, wohingegen das Reflexionsvermögen im übrigen Spektralbereich, wie auch bei den vorgenannten Ausführungsformen, einen vergleichsweise hohen und vorzugsweise annähernd konstanten Wert annimmt. Insbesondere kann im übrigen Spektralbereich das Reflexionsvermögen des Spiegels möglichst nahe an 100 Prozent gewählt werden. Auf diese Weise wird sichergestellt, daß noch mehr Licht von der Informationsanzeigeschicht die reflektierende Schicht durchdringen und von einem Betrachter wahrgenommen werden kann, daß jedoch in den übrigen Spektralbereichen das Material als hochwertiges Spiegelmaterial eingesetzt werden kann. Das hohe Transmissionsvermögen in einem relativ schmalbandigen Spektralbereich wird jedoch von Betrachtern nicht als störend empfunden. Dies führt vielmehr nur zu einem geringfügig herabgeminderten Reflexionsvermögen des Spiegels.

Ein solches Reflexionsvermögen läßt sich durch Vielfachbeschichten mit dielektrischen Lambda-Viertelschichten ohne weiteres erreichen. Bevorzugt liegt das minimale Reflexionsvermögen der reflektierenden Schicht im Bereich des schmalbandigen Minimums im Bereich von 50 bis 85 Prozent, insbesondere im Bereich von 50 bis 65 Prozent.

Bevorzugt ist bei sämtlichen vorgenannten Ausführungsformen zumindest die reflektierende Schicht von einer Schutzschicht überzogen, die als mechanischer Schutz und/oder Oxidationsschutz für die üblicherweise empfindliche reflektierende Schicht dient. Solche Schutzschichten sind im Stand der Technik beispielsweise zum Schutz von Spiegeln oder Brillengläsern bekannt.

Nachfolgend wird die Erfindung in beispielhafter Weise und unter Bezugnahme auf die beigefügten Zeichnungen bevorzugter Ausführungsbeispiele erläutert. Dabei werden weitere Merkmale und Vorteile der Erfindung ersichtlich werden. Die Figuren stellen dar:

Fig. 1 eine schematische Querschnittsansicht eines erfindungsgemäßen Materials gemäß einer ersten Ausführungsform mit passiver Ausleuchtung der Informationsanzeigeschicht;

Fig. 2 eine schematische Querschnittsansicht eines erfindungsgemäßen Materials gemäß einer zweiten Ausführungsform mit aktiver Ausleuchtung der Informationsanzeigeschicht;

Fig. 3 eine schematische Querschnittsansicht einer Lampe mit einem erfindungsgemäßen Material gemäß der ersten Ausführungsform; und

Fig. 4 eine schematische Ansicht eines Spiegels, der ein erfindungsgemäßes Material gemäß der zweiten Ausführungsform aufweist, um wahlweise Information anzuzeigen oder als Spiegel zu dienen.

In den Figuren bezeichnen gleiche Bezugszeichen identische oder gleichwirkende Elemente bzw. Merkmale.

Fig. 1 zeigt eine schematische Querschnittsansicht eines erfindungsgemäßen Materials gemäß einer ersten Ausführungsform. Das Material umfaßt eine reflektierende Schicht **1** und eine Informationsanzeigeschicht **2**. Wie durch die unterschiedlich gepunkteten Abschnitte der Informationsanzeigeschicht **2** schematisch angedeutet ist, umfaßt diese eine Anzahl von Abschnitten unterschiedlicher Transparenz für Licht, insbesondere in dem Spektralbereich, in dem Information dargestellt werden soll. Dies ist üblicherweise der sichtbare Spektralbereich, kann jedoch beispielsweise auch der infrarote Spektralbereich sein. Auf der Rückseite der Informationsanzeigeschicht **2**, d. h. auf der der reflektierenden Schicht **1** abgewandten Seite, ist eine Lichtquelle **4** angeordnet, die wahlweise an- und abgeschaltet werden kann und vorzugsweise auch hinsichtlich der Intensität gesteuert werden kann. Es kann auch vorgesehen sein, daß einzelne Abschnitte der Informationsanzeigeschicht **2** mittels gesonderter, unabhängig ansteuerbarer Lichtquellen ausgeleuchtet werden können.

Licht, das von der Vorderseite bzw. bestimmungsgemäßen Betrachtungsseite, d. h. in **Fig.** 1 vom linken Rand aus, auf die reflektierende Schicht **1** auftrifft, wird von dieser partiell reflektiert. Der reflektierte Anteil R hängt von dem Reflexionsvermögen der reflektierenden Schicht **1** ab und liegt bei einer besonders bevorzugten Ausführungsform im Bereich von 85 bis 95 Prozent, so daß der größte Teil des einfallenden Lichts wieder reflektiert wird. Somit kann die reflektierende Schicht als Spiegel für einen auf der Vorderseite des Materials befindlichen Betrachter dienen.

Licht, das von der Lichtquelle emittiert wird, gelangt durch die Informationsanzeigeschicht **2**. Dabei wird dem Lichtstrom aufgrund der Abschnitte mit unterschiedlicher Transparenz Information aufgeprägt. Die Transparenz kann im gesamten Emissionswellenlängenbereich der Lichtquelle **4** nahezu konstant sein. In diesem Fall wird dem Licht Information in Form von Graustufenwerten aufgeprägt. Die Transparenz kann jedoch auch über den Emissionswellenlängenbereich der Lichtquelle **4** variieren. In einem solchen Fall wird dem Licht Information auch in Form von Farbstufenwerten aufgeprägt.

Nach Durchqueren der Informationsanzeigeschicht **2**

trifft das Licht schließlich auf die Rückseite der reflektierenden Schicht **1** auf. Von dieser wird ein Teil T, abhängig vom gewählten Reflexionsvermögen der reflektierenden Schicht **1**, zur Vorder- bzw. Betrachtungsseite des Materials hin durchgelassen. Dort ist die dem Licht aufgeprägte Information schließlich auf der Oberfläche des Materials sichtbar.

Durch wahlweises An- und Abschalten und Variieren der Intensität der Lichtquelle kann die Information wahlweise zugeschaltet und in der Helligkeit variabel auf der Oberfläche der reflektierenden Schicht **1** angezeigt werden.

Als Materialien für die Informationsanzeigeschicht **2** kommen Glas- oder Kunststoffschichten in Frage, auf deren Oberfläche oder in deren Volumen Information in Form von grauen oder farbigen Bereichen aufgeprägt oder eingelagert ist. Es kommen auch jegliche andere transparente Materialien in Frage, die Abschnitte mit unterschiedlicher Transparenz aufweisen, beispielsweise vergleichsweise grobmaschige Textilien, wo die Struktur des Gewebes der darzustellenden Information entspricht. Bei diesen Materialien wird die Information überwiegend nur in Form von Standbildern, d. h. zeitlich nicht variablen Bildern bzw. Zeichen, dargeboten.

Als Material für die Informationsanzeigeschicht **2** kann jedoch auch ein Projektionsschirm mit Hintergrundausleuchtung oder ein LCD-Display mit Hintergrundausleuchtung verwendet werden.

Fig. 2 zeigt eine schematische Querschnittsansicht eines erfindungsgemäßen Materials gemäß einer zweiten Ausführungsform. Bei diesem Material wird die Informationsanzeigeschicht aktiv ausgeleuchtet. Zu diesem Zweck umfaßt die Informationsanzeigeschicht **5** eine Anzahl von Abschnitten, deren Helligkeit unabhängig voneinander binär und/oder in beliebigen Abstufungen variiert werden kann. Dies ist in **Fig.** 2 schematisch durch die schraffierten und nicht schraffierten Felder **5**a bzw. **5**b angedeutet.

Beispiele für eine solche Informationsanzeigeschicht sind insbesondere LED-Arrays, Arrays aus lichtemittierenden Polymeren oder Bildschirme. Solche Anzeigen eignen sich sowohl für die Darstellung von Bewegtbildern als auch von Standbildern.

Die Ausleuchtung der Informationsanzeigeschicht **5** führt zu einem Lichtstrom, dem Information in Form von Helligkeits- und/oder Farbmustern aufgeprägt ist. Dieser Lichtstrom trifft auf die Rückseite der reflektierenden Schicht **1** auf und wird von dieser teilweise zur Vorder- bzw. Betrachtungsseite hin durchgelassen. Dort ist die Information in Form von Helligkeits- und/oder Farbmustern auf der Oberfläche der reflektierenden Schicht **1** sichtbar.

Fig. 3 zeigt schematisch eine Querschnittsansicht einer Lampe **6** mit einem erfindungsgemäßen Material gemäß der ersten Ausführungsform.

Die Lampe ist bei dem dargestellten Beispiel säulenartig ausgebildet und umfaßt im oberen Bereich einen Lampenschirm, der um die Lichtquelle **4** herum angeordnet ist. Der Lampenschirm umfaßt das erfindungsgemäße Material mit der reflektierenden Schicht **1** und der Informationsanzeigeschicht **2**, **5** oder besteht voll und ganz aus diesem. Die Lampe umfaßt außerdem einen Lampenfuß **9**, eine Standfläche **8**, die vorzugsweise geschlossen ausgebildet ist, und ein oberes Ende **7**, das beim dem dargestellten Ausführungsbeispiel nach oben hin offen ist. Grundsätzlich kann die Lampe oder der Lampenschirm auch beliebig anders gestaltet sein.

Ist die Lichtquelle **4** ausgeschaltet, so wirkt der Lampenschirm als reflektierender Spiegel. Wird die Lichtquelle **4** eingeschaltet, so wird dem Licht beim Durchqueren der Informationsanzeigeschicht **2**, **5** Information in Form von abschnittsweise unterschiedlichen Helligkeits- und/oder Farbänderungen aufgeprägt. Das modulierte Licht durchquert die reflektierende Schicht **1** mit dem partiellen Reflexionsvermögen und kann auf der Oberfläche des Lampenschirms als Information wahrgenommen werden.

Zur Anzeige von Standbildinformation kann das Material der Informationsanzeigeschicht **2** unterschiedlich geschwärzte und/oder gefärbte Abschnitte auf der Oberfläche oder im Materialvolumen aufweisen. Beispiele für Materialien des Lampenschirms sind dünne Pappenbahnen, Kunststoffilme, einfache Glas- oder Kunststofformen, Maschenstrukturen, beispielsweise aus Textilien, etc. Insbesondere kann das Material des Lampenschirms auch mit einer semitransparenten Druckfarbe, beispielsweise im Siebdruckverfahren, oberflächlich eingefärbt sein.

Die reflektierende Schicht **1** kann unmittelbar auf das Material der Informationsanzeigeschicht **2** aufgebracht sein. Die reflektierende Schicht kann jedoch auch auf einem Überzug aus einem transparenten Material, beispielsweise Kunststoff oder Glas, aufgebracht sein. In letzterem Fall wird es bevorzugt, daß der Überzug mit dem Material der Informationsanzeigeschicht zu einem Verbundmaterial zusammengefügt ist. Als Verbindungsverfahren eignet sich insbesondere für Kunststoffmaterialien Thermo-Verschweißen.

Zur einfacheren Montage kann der Lampenschirm, nachdem er zunächst aus dem erfindungsgemäßen Material als rechteckförmige Bahn zurechtgeschnitten wurde, mit einem Verbindungsstreifen, beispielsweise einem selbstklebenden Streifen oder mit einem Klettband, versehen und dann durch Verbinden des Verbindungsstreifens mit einem anderen Ende der Bahn zu einer geeigneten dreidimensionalen Form zusammengefügt werden.

Der Lampenschirm kann auch mit Versteifungsringen etc. versehen sein, um die dreidimensionale Form zu wahren und um für eine geeignete mechanische Stabilität zu sorgen. Nach dem Zusammenfügen kann der Lampenschirm auch plastisch zu einer geeigneten dreidimensionalen Form weitergeformt werden, beispielsweise durch Wärmebeaufschlagung und Überziehen über eine geeignete Form.

Ein Aufbau von der in **Fig.** 3 gezeigten Anordnung läßt sich vielfältig auch für andere Zwecke einsetzen. Beispielsweise als Reklame-Litfaßsäule mit geschlossenem oberen Ende. Um die Aufmerksamkeit der Betrachter zu steigern, können Teile der Litfaßsäule eine spiegelnde Oberfläche aufweisen, was für Litfaßsäulen ungewöhnlich ist, und kann auf anderen Teilen nach Bedarf Werbeinformation oder auch andere nützliche Hinweise, beispielsweise Textinformation, angezeigt werden.

Durch Ausschalten der Lichtquelle **4** können alle Werbeinformationen auf einmal ausgeblendet und wieder eingeblendet werden. Beim plötzlichen Einblenden werden Passanten unwillkürlich die Litfaßsäule genauer fixieren, um festzustellen, was sich da im Gesichtsfeld gerade geändert hat. Somit kann in einfacher Weise die gewünschte erhöhte Aufmerksamkeit des Publikums für Werbeinformation bewerkstelligt werden. Um diesen Effekt noch weiter zu steigern, kann jedem Informationsanzeigeabschnitt eine eigene und selbsttätig schaltbare Lichtquelle zugeordnet sein.

In einzelnen oder sämtlichen Feldern der Litfaßsäule können auch Bewegtbilder dargestellt werden, wenn man hinter der reflektierenden Schicht **1** geeignete aktive Informationsanzeigevorrichtungen verwendet, wie diese vorstehend beschrieben wurden.

Die Steuerung der Lichtquelle und der Informationsanzeigeschicht **5** erfolgt mit Hilfe eines Computers oder einer geeigneten Steuereinheit.

Fig. 4 zeigt schließlich ein tafelförmiges Flächenelement **10**, das zumindest abschnittsweise ein Material gemäß der vorliegenden Erfindung umfaßt.

Das Flächenelement **10**. umfaßt einen Randbereich **11**, einen Zentralbereich **12** und einen kleineren Abschnitt **13**. Zur nachfolgenden Beschreibung sei der Übersichtlichkeit halber angenommen, daß der Randbereich **11** und der kleinere Abschnitt **13** ein erfindungsgemäßes Material umfaßt, während der Zentralbereich ausschließlich als Spiegel funktioniert. Die Erfindung ist jedoch nicht auf eine solche Anordnung beschränkt.

Sofern die Informationsanzeigeschicht des Materials in den Bereichen **11** und **13** nicht ausgeleuchtet wird, weisen auch diese Bereiche eine reflektierende Oberfläche auf. Somit wirkt das gesamte Flächenelement **10** als Spiegel.

Bei Ausleuchtung kann in den Bereichen **11** und **13** Information eingeblendet werden. Beispielsweise ließe sich im Randbereich **11** bei Bedarf ein ornamentaler Rahmen, beispielsweise ein barocker Zierbildrahmen, einblenden. Ein solches Ornament kann in eine auf der Rückseite befindliche Kunststoffschicht eingefärbt und/oder eingeschwärzt sein. Ein solches Ornament kann auch mittels einer aktiven Informationsanzeigevorrichtung dargestellt werden, beispielsweise mit einer LCD-Anzeige mit Hintergrundausleuchtung.

Mit einer aktiven Informationsanzeigevorrichtung lassen sich auch benutzerspezifisch unterschiedliche Informationen im Randbereich einblenden, beispielsweise ein Zierrahmen das eine mal und aktuelle Börsenkurse als Laufband das andere mal.

Das erfindungsgemäße Material kann auch an einer beliebigen anderen Stelle des Flächenelements **10** angeordnet sein, beispielsweise in einem vergleichsweise kleinen Zentralfeld **13**. Mittels einer auf der Rückseite angeordneten Informationsanzeigevorrichtung können beliebige Bildinformationen eingeblendet werden.

Eine bevorzugte Anwendung betrifft die Einblendung von Stockwerksangaben und/oder weiteren Bedienhinweisen im Spiegel eines Fahrstuhls. Eine weitere bevorzugte Anwendung betrifft die Anzeige von kurzen Hinweis- oder Warntexten in einem Spiegel, beispielsweise einem Hotelzimmerspiegel.

Eine weitere bevorzugte Anwendung betrifft die Einblendung von Text- oder Zahleninformationen auf die reflektierende Oberfläche von Zierelementen von Gegenständen, insbesondere Elektrogeräten. Beispielsweise kann eine Stereoanlage mit einem Bedienfeld versehen sein, das im nichtaktiven Zustand der Stereoanlage eine verspiegelte Oberfläche aufweist. Oder der Rahmen eines Monitors kann mit dem erfindungsgemäßen Material bestückt sein.

Beim Anschalten des Elektrogeräts oder beim Feststellen von Erschütterungen durch einen herannahenden Benutzer schaltet sich eine hinter der verspiegelten Oberfläche des Materials befindliche Informationsanzeige an und stellt dem Benutzer nützliche Bedieninformation dar. Nach Ausschalten des Elektrogeräts weist das Material wiederum eine verspiegelte Oberfläche auf. Bei der Informationsanzeige kann es sich um LED-Displays, LCD-Displays mit Hintergrundausleuchtung oder beliebige Bildschirmtypen handeln.

Für diese Anwendung eignen sich insbesondere auch geeignet reflexionsbeschichtete Kunststoffolien, beispielsweise verchromte Folien aus lichtemittierenden Polymeren in Matrixanordnung.

Zur Informationsanzeige ist das erfindungsgemäße Material zweckmäßig mit einer Steuereinheit, beispielsweise mit einem Computer, verbunden, der die Informationsanzeige mittels der Informationsanzeigeschicht geeignet steuert.

Mit Hilfe des in **Fig.** 4 dargestellten spiegelnden Flächenelements läßt sich noch eine weitere bevorzugte Anwendung realisieren. Es sei der Fall betrachtet, daß der gesamte zentrale Bereich **12** des Flächenelements **10** aus dem erfindungsgemäßen Material ausgebildet ist, mit einer aktiven Informationsanzeigeschicht, und daß das Flächenelement als Spiegel in einem Bekleidungsgeschäft verwendet werden soll.

Die Körperstatur eines Betrachters werde erfaßt oder eine typische Körperstatur sei in einer Speichervorrichtung einer Steuereinheit abgespeichert. Außerdem seien in die Steuereinheit Parameter eingespeichert, die die Darstellung von Bekleidungsstücken mit Hilfe der Informationsanzeige steuern können.

Anstatt daß der Betrachter Bekleidungsstücke mühsam anprobiert, stellt sich der Betrachter einfach vor den Spiegel. Dabei wird sein Blickwinkel auf den Spiegel und seine aktuelle Beobachtungsposition erfaßt und in die Steuereinheit eingegeben. Außerdem wird in die Steuereinheit eingegeben, welches Bekleidungsstück und in welcher Farbe, Größe etc. der Betrachter elektronisch anzuprobieren wünscht. Auf Befehl wird mittels der Steuereinheit die hinter dem Spiegel befindliche Informationsanzeige aktiviert und in Abhängigkeit von vorstehend genannten Parametern geeignet angesteuert, um dem Betrachter auf dem Spiegel die Illusion elektronisch darzustellen, er habe das Bekleidungsstück tatsächlich anprobiert.

Bei dieser Anwendung erblickt der Betrachter auf dem Spiegel Körperpartien, die nicht von dem anzuprobierenden Bekleidungsstück verdeckt werden, in Reflexion, während Körperpartien, die von dem anzuprobierenden Bekleidungsstück verdeckt werden, mit Hilfe der Informationsanzeigeschicht für den Benutzer an geeigneten Abschnitten des Spiegels elektronisch und in Transmission durch die reflektierende Schicht hindurch eingeblendet werden.

Weitere mögliche Anwendungsformen des erfindungsgemäßen Materials umfassen:

- Große Spiegel oder ganze Schaufenster wechseln zwischen Reflexion und projizierter Information;
- Kaufhausspiegel verwandeln sich gänzlich in eine von hinten projizierbare Fläche, z. B. mit Video- oder Werbefilmprojektion;
- Verkaufstheken oder Bartheken sind als verspiegelte Körper ausgebildet und werden bei Bedarf durchlässig, so daß man den Thekeninhalt sehen kann (dies ist insbesondere sinnvoll bei Gütern, die man vor Hitze oder vor unbefugtem Zugriff schützen will);
- Lampen, Lampenschirme, Beleuchtungskörper und dergleichen können gänzlich aus dem erfindungsgemäßen Material gefertigt sein;
- Verformte Körper mit einer Oberfläche aus dem erfindungsgemäßen Material lassen sich realisieren;
- Zimmerspiegel können eine Uhr mit Weckfunktion enthalten, wobei sich der Spiegel bei Aktivierung der Weckfunktion in einen Spiegel mit eingeblendeter Uhr- und/oder Bild- und/oder Videoinformation verwandelt;
- Gerätedeckel, Displays von Stereoanlagen und dergleichen können mit einer Folie gemäß der vorliegenden Erfindung beschichtet sein;
- Verchromte Kunststoffteile können mit folierten Teilen gemäß der vorliegenden Erfindung kombiniert werden, z. B. Bildschirme, Laptops, Taschenrechner, Telefone und dergleichen;
- Kulissen für die Filmproduktion können mit dem Material realisiert werden.

Es ist offensichtlich, daß die vorliegende Erfindung nicht auf die vorstehend angeführten speziellen Ausführungsbeispiele und Anwendung beschränkt ist, sondern daß vielmehr zahlreiche Variationen und Modifikationen ausgeführt werden können, ohne vom Schutzbereich der beigefügten Pa-

tentansprüche abzuweichen.

Patentansprüche

1. Reflektierendes Material mit Displayfunktion, zumindest umfassend:
- eine reflektierende Schicht (**1**) und
- eine auf einer Rückseite der reflektierenden Schicht angeordnete Informationsanzeigeschicht (**2**; **5**), um mittels aktiver oder passiver Ausleuchtung Information darzubieten,

bei welchem Material
- die reflektierende Schicht zumindest abschnittsweise ein partielles Reflexionsvermögen aufweist, das so gewählt ist,
- daß die reflektierende Schicht (**1**) Licht, das von der Vorderseite auf die reflektierende Schicht (**1**) auftrifft, überwiegend reflektiert, um als Spiegel zu wirken,
- daß jedoch bei Ausleuchtung der Informationsanzeigeschicht (**2**; **5**) Information von der Vorderseite der reflektierenden Schicht (**1**) her sichtbar ist.

2. Material nach Anspruch 1, bei dem die reflektierende Schicht (**1**) mit der Informationsanzeigeschicht (**2**; **5**) so verbunden ist, daß in einen Spalt (**3**) zwischen den beiden Schichten im wesentlichen stirnseitig kein Licht einfällt.

3. Material nach einem der vorhergehenden Ansprüche, bei dem das Reflexionsvermögen der reflektierenden Schicht (**1**) im sichtbaren Spektralbereich im wesentlichen konstant ist.

4. Material nach Anspruch 5, bei dem das Reflexionsvermögen vorzugsweise im Bereich von 75 bis 95 Prozent, insbesondere im Bereich von 85 bis 95 Prozent, liegt.

5. Material nach einem der vorhergehenden Ansprüche, bei dem die Informationsanzeigeschicht (**2**) als transparentes oder semitransparentes Material, insbesondere als Kunststoff-, Glas- oder Textilschicht, mit transparenten und weniger transparenten und auf diese Weise Information darstellenden Abschnitten ausgebildet ist, insbesondere als Filmschicht, die rückseitig passiv ausleuchtbar ist.

6. Material nach Anspruch 5, bei dem die der reflektierenden Schicht (**1**) abgewandte Seite des transparenten oder semitransparenten Materials eine Licht diffus streuende Oberfläche aufweist.

7. Material nach einem der Ansprüche 1 bis 4, bei dem die Informationsanzeigeschicht (**5**) einen Array (**5**) von lichtemittierenden Polymeren umfaßt oder aus diesem besteht.

8. Material nach Anspruch 7, bei dem die Rückseite des Arrays (**5**) von lichtemittierenden Polymeren eine Licht diffus streuende Oberfläche aufweist.

9. Material nach einem der vorhergehenden Ansprüche, bei dem die reflektierende Schicht durch Aufdampfen einer metallischen Beschichtung oder einer dielektrischen Beschichtung, insbesondere Vielfachbeschichtung, unmittelbar auf die Informationsanzeigeschicht (**2**; **5**) aufgebracht ist.

10. Material nach einem der Anspruche 1 bis 9, bei dem die reflektierende Schicht (**1**) als Kunststoffschicht ausgebildet ist, die reflektierend beschichtet ist.

11. Material nach Anspruch 10, bei dem die reflektierende Schicht (**1**) mit der Informationsanzeigeschicht (**2**) durch Thermo-Verschweißen verbunden ist.

12. Material nach einem der Ansprüche 4 bis 11, bei dem die reflektierende Schicht (**1**) und/oder die Informationsanzeigeschicht (**2**; **5**) plastisch verformt ist.

13. Material nach einem der Ansprüche 1 bis 4, bei dem die Informationsanzeigeschicht (**5**) so ausgelegt ist, daß zumindest ein Abschnitt von dieser aktiv ausleuchtbar ist.

14. Material nach Anspruch 13, bei dem die Informationsanzeigeschicht (**5**) als Bildschirm, insbesondere als lichtstarker Plasmabildschirm, ausgebildet ist.

15. Material nach Anspruch 13, bei dem die Informationsanzeigeschicht (**5**) als Flüssigkristallanzeige (LCD) ausgebildet ist, die für Durchlichtbetrieb mit Hintergrundausleuchtung ausgelegt ist.

16. Material nach Anspruch 13, bei dem die Informationsanzeigeschicht (**5**) als LED-Array (**5**) ausgebildet ist.

17. Material nach einem der Ansprüche 13 bis 16, bei dem die reflektierende Schicht (**1**) als Glas- oder Kunststoffschicht ausgebildet ist, die reflektierend beschichtet ist.

18. Material nach Anspruch 17, bei dem die Informationsanzeigeschicht (**5**) mit der reflektierenden Schicht durch Verkleben verbunden ist.

19. Material nach einem der Ansprüche 13 bis 18, bei dem die reflektierende Schicht (**1**) durch Aufdampfen einer metallischen Beschichtung oder einer dielektrischen Beschichtung, insbesondere einer Vielfachbeschichtung, aufgebracht ist.

20. Material nach einem der Ansprüche 13 bis 16, bei dem die reflektierende Schicht (**1**) durch Aufdampfen einer metallischen Beschichtung oder einer dielektrischen Beschichtung, insbesondere Vielfachbeschichtung, unmittelbar auf die Informationsanzeigeschicht (**5**) aufgebracht ist.

21. Material nach einem der Ansprüche 7, 8 oder 16, bei dem das Reflexionsvermögen der reflektierenden Schicht (**1**) ein schmalbandiges Minimum im Bereich der Emissionswellenlänge des Arrays (**5**) aus LEDs bzw. lichtemittierenden Polymeren aufweist.

22. Material nach Anspruch 21, bei dem das minimale Reflexionsvermögen im Bereich des schmalbandigen Minimums vorzugsweise im Bereich von 50 bis 85 Prozent, insbesondere im Bereich von 50 bis 65 Prozent, liegt.

23. Lampenschirm, dadurch gekennzeichnet, daß dieser zumindest abschnittsweise ein Material nach einem der Ansprüche 1 bis 6 umfaßt.

24. Lampe, gekennzeichnet durch einen Lampenschirm nach Anspruch 23.

25. Spiegel, dadurch gekennzeichnet, daß dieser zumindest abschnittsweise ein Material nach einem der Ansprüche 1 bis 6 und eine Lichtquelle (**4**) umfaßt, um das transparente oder semitransparente Material von der der reflektierenden Schicht (**1**) abgewandten Seite des Materials her auszuleuchten.

26. Spiegel, dadurch gekennzeichnet, daß dieser zumindest abschnittsweise ein Material nach einem der Ansprüche 7 bis 22 umfaßt.

27. Spiegel nach Anspruch 26, weiterhin umfassend eine elektrische Steuereinheit, um die Anzeige von Information mit Hilfe der Informationsanzeigeschicht (**5**) zu steuern.

28. Informationsanzeigevorrichtung, zumindest umfassend:
- ein Material nach einem der Ansprüche 1 bis 6 und
- eine Lichtquelle (**4**), um das transparente oder semitransparente Material von der der reflektie-

renden Schicht (**1**) abgewandten Seite des Materials her auszuleuchten.

29. Informationsanzeigevorrichtung, gekennzeichnet durch ein Material nach einem der Ansprüche 7 bis 21 auf einer Vorderseite der Vorrichtung, um als Spiegel und/oder Display zur Anzeige von Information auf der Vorderseite der Vorrichtung zu dienen.

30. Informationsanzeigevorrichtung nach Anspruch 29, weiterhin umfassend eine elektrische Steuereinheit, um die Anzeige von Information mit Hilfe der Informationsanzeigeschicht (**5**) zu steuern.

31. Elektrogerät, umfassend einen Spiegel nach einem der Ansprüche 25 bis 27 und/oder eine Informationsanzeigevorrichtung nach einem der Ansprüche 28 bis 30.

Hierzu 2 Seite(n) Zeichnungen

Nummer: DE 199 43 355 A1
Int. Cl.[7]: G 09 F 9/00
Offenlegungstag: 15. März 2001

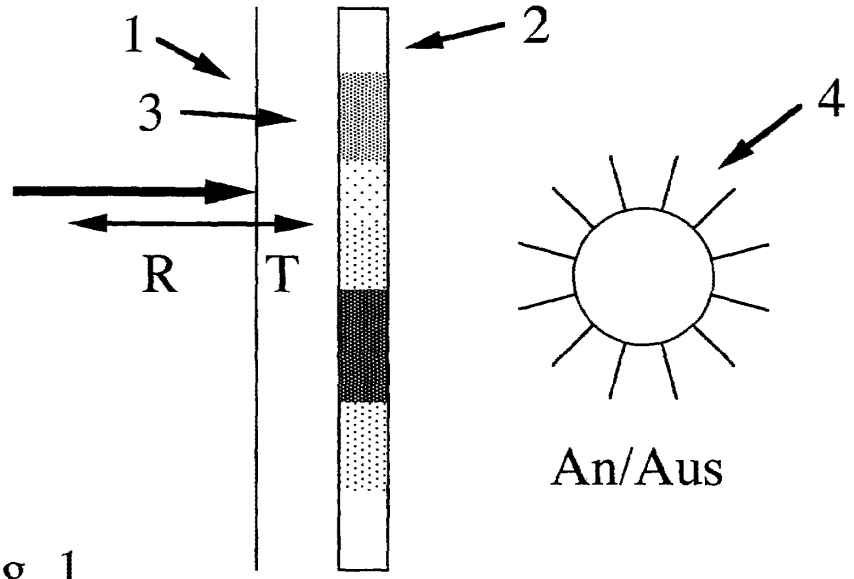

Fig. 1

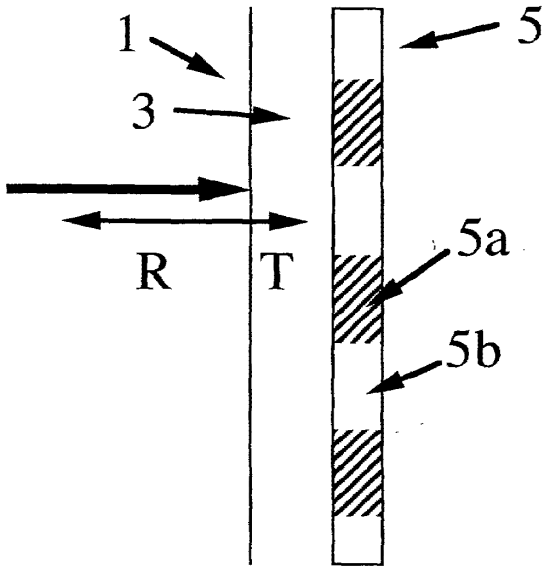

Fig. 2

Nummer: DE 199 43 355 A1
Int. Cl.[7]: G 09 F 9/00
Offenlegungstag: 15. März 2001

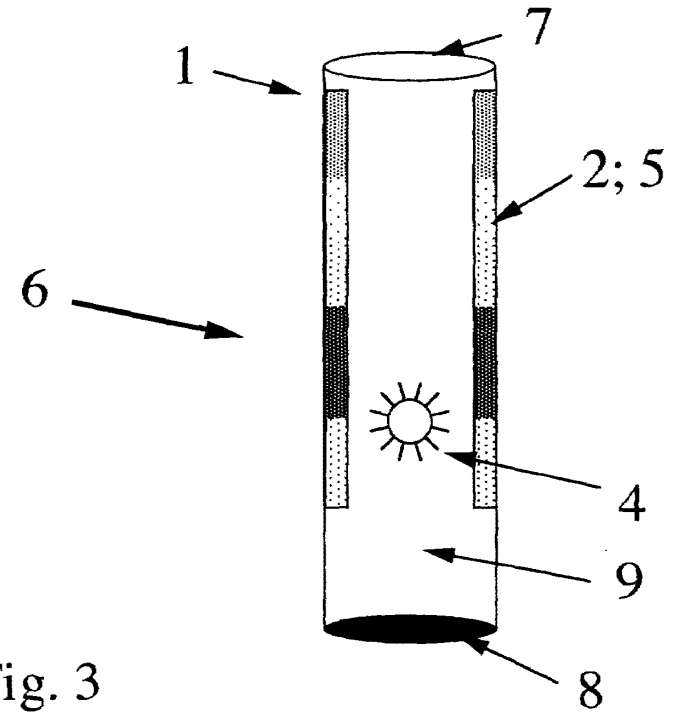

Fig. 3

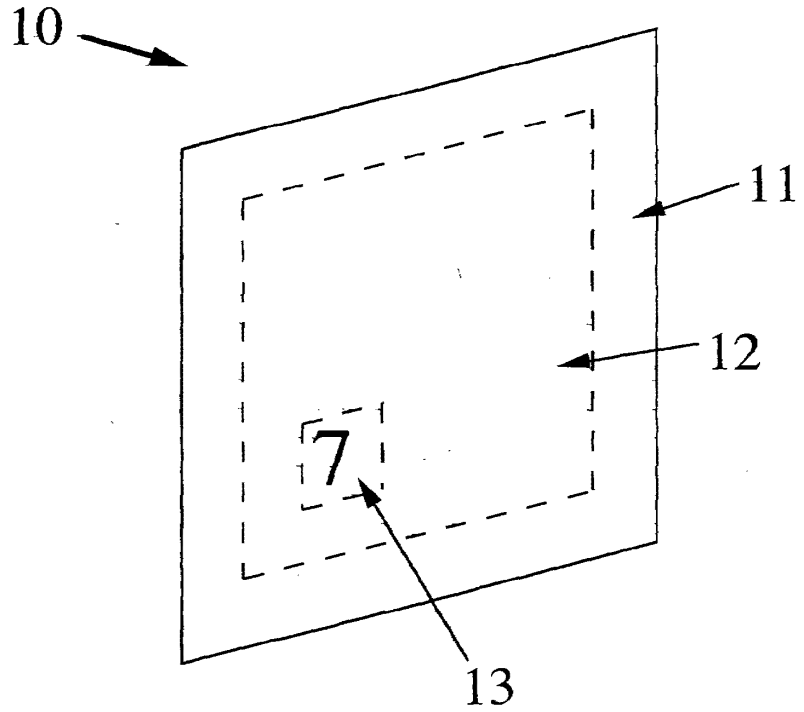

Fig. 4

(19) Europäisches Patentamt
European Patent Office
Office européen des brevets

(11) EP 1 372 092 A1

(12) EUROPEAN PATENT APPLICATION

(43) Date of publication:
17.12.2003 Bulletin 2003/51

(51) Int Cl.7: G06F 17/60

(21) Application number: 02354094.1

(22) Date of filing: 10.06.2002

(84) Designated Contracting States:
AT BE CH CY DE DK ES FI FR GB GR IE IT LI LU MC NL PT SE TR
Designated Extension States:
AL LT LV MK RO SI

(71) Applicant: Accenture Global Services GmbH
8212 Neuhausen Am Rheinfall,
Schaffhausen (CH)

(72) Inventors:
- Illsley, Martin
06520 Magagnosc (FR)
- Kaldor, Jonathan
06130 Grasse (FR)
- Berglund, David
06270 Villeneuf Loubet (FR)

(74) Representative: de Beaumont, Michel
Cabinet Michel de Beaumont
1, rue Champollion
38000 Grenoble (FR)

(54) Interactive trying-on cubicle

(57) The present invention relates to a system for reproducing a preceding picture of a user wearing clothes or analog, comprising: a screen (4) to display at least a pre-registered picture of the user; a clothes type detector (8) to automatically identify the kind of clothes currently worn by the user; and a search unit (14) to extract automatically, from at least one central remote database (13), at least one pre-registered picture in which the user wears at least one article of clothing similar to or matchable with the current one.

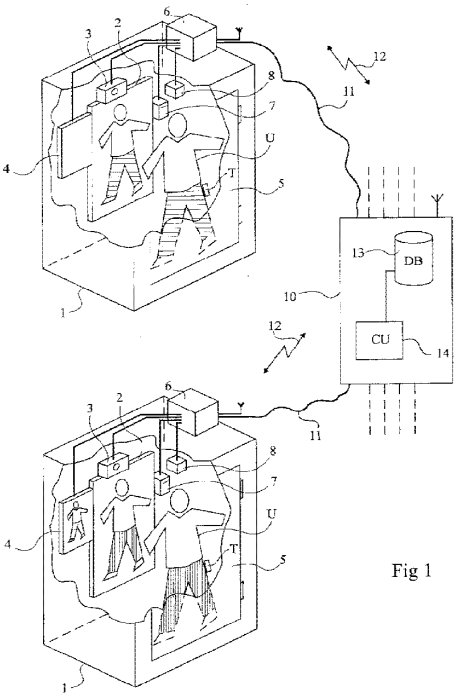

Fig 1

EP 1 372 092 A1

Description

FIELD OF THE INVENTION

[0001] The present invention relates to trying-on cubicles or rooms which are usually provided in clothes shops or analog.

BACKGROUND

[0002] As shoppers go from one changing room or trying-on cubicle of a shop to another, they have little way of remembering what they looked like in the clothes that they tried on in the first shop. Further, a shopper may try a first article of clothing in a first shop (for example a shirt or trousers), and another one in a second shop (for example a jacket), and may want matching these clothes.

[0003] There is a technical problem in giving the possibility for a shopper to compare or match some clothes that he tries in a current shop with respect to other clothes that he tried in a former one.

[0004] There is another technical problem in selecting, among an important number of pictures taken in a trying-on cubicle and representing the same shopper, some pictures to be compared with clothes of the same type tried by the shopper in another shop or to allow the shopper to match different types of clothes tried in different shops. Indeed, when trying clothes in a shop, a shopper usually wears several clothes and only some of these are to be compared with other clothes tried in another shop.

[0005] A purpose of the present invention is to provide a changing or trying-on cubicle or room giving a shopper the possibility to see what he looked like when trying on a former article of clothing and/or to compare or match at least one article of clothing he wore in a former shop.

[0006] Another purpose of the invention is to provide an automatic selection of pictures in which a shopper wears the same kind of clothes.

[0007] Another purpose of the invention is to provide a trying-on room or cubicle adapted to communicate with at least a central system in order to give to a shopper the possibility of comparing clothes of different shops.

BRIEF SUMMARY OF THE INVENTION

[0008] To attain the above purposes and others, the present invention provides a system for producing at least one picture of a person wearing clothes. Such a system comprises a screen to display at least one pre-registered picture; a mirror to reflect the current appearance of the user; a detector to identify the kind of clothes worn by the user; and a search unit to extract from a central remote database the pre-registered picture in which the user wore similar or matchable kind of clothes.

[0009] A trying-on room according to the invention is provided with a camera or the like to take preferably fixed pictures to be displayed in other locations. According to the invention, a trying-on cubicle or room is provided with not only a mirror to reflect the current picture of an user wearing clothes, but also a screen to display a preceding picture. Such a picture is preferably taken in another location, i.e. in another trying-on cubicle, for example of another shop. However, the system of the present invention also works for a shopper trying on successively or not different clothes in a same shop (in a same trying-on room or not).

[0010] According to a preferred embodiment, the changing room comprises a detector to identify at least the type of clothes worn by the user. For example, such a detector can be a magnetic detector of transponder or any other kind of tag providing a wireless identification of the clothes.

[0011] The user may select between a comparison of clothes of the same kind or a matching of clothes to be wore together based, for example, on their color or kind. The system is then able to select among all the pictures of the user taken previously, a limited number of pictures corresponding to the choice of that user.

[0012] A communication between the trying-on rooms and the central system comprising the database in which are stored the pictures can be a wireless link or a wired link.

DESCRIPTION OF THE DRAWINGS

[0013] These purposes, features, and advantages of preferred, non limiting, embodiments of the present invention will be described by way of examples with reference to the accompanying drawings, in which:

Fig. 1 schematically represents trying-on rooms and the main elements of a central system according to one exemplary embodiment of the present invention; and

Fig. 2 illustrates, with a flowchart, the main steps of an exemplary implementation of the present invention.

[0014] For clarity, only the elements useful to the understanding of the invention have been shown in the drawings and will be disclosed hereafter. More specifically, the programming steps for implementing the invention will not be detailed as it will readily occur to those skilled in the art.

DESCRIPTION OF THE PREFERRED EMBODIMENTS

[0015] Fig. 1 schematically represents a system according to one exemplary embodiment of the present invention. In Fig. 1, two trying-on rooms, or cubicles 1 have been shown. However, according to the invention, the number of trying-on rooms is not limited.

Microsoft Ex. 1002 - Page 120 of 451

[0016] According to the invention, each room 1 is provided with a mirror 2 (which equips most of the conventional trying-on rooms). The mirror 2 is associated with a camera 3 to take a picture of a user looking in the mirror and wearing clothes. Alternatively, the mirror may be replaced with a screen in which are displayed the current picture taken by the camera 3. In this embodiment, the camera is able to take moving pictures.

[0017] According to the invention, each room 1 also comprises at least one screen 4 to display picture(s) of the current user taken in a previous trying-on room. Screen 4 may be separated from the mirror or screen 2, or be combined therewith. Rooms 1 are closable with a door or curtain 5.

[0018] Trying-on rooms according to the present invention are also provided with a control unit 6. Control unit 6 is preferably a computerized device for controlling the camera 3, the screen 4 and all the devices and elements that also comprise the system. An input device 7 such as a card reader (for loyalty cards or more generally any kind of identification cards), or a keyboard or analog, is provided so that the user can select some functionality of the system and for authentication.

[0019] Further, the system also comprises a detector 8 (preferably a wireless detector) able to identify the kind of clothes worn by the user.

[0020] According to a preferred embodiment of the present invention, the detector 8 is an electromagnetic transponder reader which is able to detect a tag or any analog passive or active label fixed to an article of clothing. Thus, one takes benefit of the fact that the clothes in a shop are most often equipped with electromagnetic labels or tags which can be used by the present invention to identify at least the kind of clothes. Tags may contain the type of clothes, its color, pattern, etc. The kind of product automatically detected by the system is used either to select pictures showing the user wearing clothes of the same type, or to select pictures in which the user wears clothes which may be matched with the current one.

[0021] Each trying-on room according to the present invention communicates with a central system 10 through wired 11 or wireless 12 links. The central system according to the invention includes at least a database 13 (DB) for storing the pictures taken in the different changing rooms. Indeed, once the user has tried an article of clothing in a first changing room, the system cannot know where a user will try another article of clothing to be compared with the previous one. The system 10 also comprises a central control unit 14 (CU) for controlling and synchronizing all the operation of the system. Alternatively, more than one database and more than one central system can be used. These systems then share the information.

[0022] A user U wearing clothes is represented in Fig. 1 with a silhouette in dotted lines. In a first trying-on room 1 (upper in the figure), the user U is wearing trousers with horizontal stripes. In the other trying-on room 1 (lower in the figure), the user U is wearing trousers with vertical stripes.

[0023] The operation of a system according to the present invention will be described hereafter in connection with Fig. 2, which illustrates, by way of a flowchart, an exemplary implementation of the invention.

[0024] Let us assume that, in a trying-on room according to the present invention, a user wears the clothes he chooses in a current shop, for example trousers with horizontal stripes (CLOTHES1, block 21) as shown in Fig. 1 (in the upper changing room).

[0025] If the user plans to compare or match the current article of clothing with another one, he enters an authentifiant in the system. The authentication of the user can be made through a keyboard in which the user enters a specific code or through a loyalty card or smart card containing, for example, in a chip or on a magnetic track, the identification of the user. The system not only identifies the user but also the clothes that he wears (block 22, IDENTIFY USER/CLOTHES). The identification of the article of clothing concerns at least the kind of article of clothing (shirt, trousers, jacket, etc.) but preferably also the color and/or the pattern (striped, plain, etc.) and is contained, for example, in a label T (FIG. 1) attached to the article of clothing.

[0026] The authentication of the user is important not only to recognize this user in another trying-on room, but also because it is not desired that pictures can be taken without the agreement of the user.

[0027] Then, the system takes a picture (block 23, PICTURE), with camera 3 and stores that picture (block 24, STORE) with the identification of the user. The storage of the picture can be temporarily made in the control device 6 of the changing room which comprises a memory before transmission to the central system 10 for storing in the database 13.

[0028] Alternatively, the picture can be sent to the user's home, for example, through the Internet, to allow the user seeing the picture on its own computer.

[0029] Several pictures of the user wearing several clothes can be made in a same changing room before the user goes out to another shop. However, for simplicity, the invention will be described in case only one article of clothing is tried on in the first changing room.

[0030] When the user comes into another shop (or in the same shop, but after having wore another article of clothing), he may want comparing or matching the current article of clothing with a previous one. For example, supposing that the user U wears trousers having vertical stripes as shown in the lower room of Fig. 1 (block 25, CLOTHES2), he may want comparing the trousers with vertical stripes to the trousers with horizontal ones.

[0031] According to the invention, the user must then identify himself either with a keyboard or any entering device of the changing room or by introducing his authentication card in the reader 7. Further, the current article of clothing worn by the user has to be identified by the system (block 26, IDENTIFY USER/CLOTHES). As

Microsoft Ex. 1002 - Page 121 of 451

previously, the system identifies the article of clothing (kind, color, and pattern) by detecting its label T.

[0032] The user then selects (block 27, COMPARE/MATCH) if he wants to compare the current article of clothing he wears to a previous one of the same kind, or if he wants to match the current article of clothing with another kind of article of clothing tried in a previous changing room. Such a selection can be done with a selection device (for example a two-buttons keyboard 9), which may be combined with the identification device 7, to indicate to the system 10 which kind of picture is desired. The central system 10 then searches the corresponding pictures (block 28, SEARCH). The selected pictures are transmitted to the control device 6 of the current room and the pictures are displayed (block 29, DISPLAY) on the screen 4. If there is more than one picture to display, one can either provide a scrolling display with a predetermined timing for each picture, or share the screen into several areas in which the different pictures are displayed.

[0033] To match the different types and/or colors and/or patterns of clothes, the central system 10 (alternatively the control device 6 of the current room) contains dressing rules. Such rules may be lists of clothes to be worn together, color matching or any rules which can be translated to be interpreted by a computerized system.

[0034] The current article of clothing worn by the user is also to be stored in the central system for a next comparison. Therefore, the camera 3 of the trying-on room also takes a picture (block 23') and transmits this picture to the central system to be stored (block 24').

[0035] An advantage of the present invention is that a shopper can not only see himself normally in a mirror with clothes on, but also view a picture of himself with other clothes on.

[0036] Another advantage of the present invention is that, with the automatic detection of the clothes worn by the user, the system is then able to automatically select the kind of pictures to be displayed.

[0037] The central system 10 of the invention or the control devices 6 of each trying-on room are accordingly able to select clothes depending on their type. For example, a list of clothes of same kind is stored in the central system 10 or in the control devices 6. Further, according to the preferred embodiment of the present invention in which the user can also match clothes of different kinds, the system also comprises lists or tables with the kinds of clothes which can be matched (for example, trousers with a jacket). Of course, if the pictures available for the user only contain one kind of clothes, the system does preferably not wait for a selection between matching and comparison, and considers a comparison mode.

[0038] A further advantage of the present invention is that, having stored different pictures of the user, these pictures can also be displayed on the own computer of the user (for example, transmitted through Internet).

[0039] Having thus described at least one illustrative embodiment of the invention, various alterations, modifications and improvements will readily occur to those skilled in the art. In particular, implementing the invention with computerized devices in the ability of one with an ordinary skill in the art. Further, other elements having the same function thus described in the present specification can be provided in replacement. For example, the screen 4 and the mirror 2 can be combined, or more than one screen may be associated with a single mirror. With this respect, the size of the mirror and of the screen may be the same or different.

[0040] Furthermore, other detection devices may be provided either for identifying the user or for detecting the kind of the clothes. It should also be noted that a single picture can be taken with a user wearing more than one article of clothing. Then, the matching is preferably invalidated for the next changing room. Finally, the present invention may also apply to other wearing articles than clothes. For example, shoes, hats, glasses, etc.

[0041] Such alterations, modifications, and improvements are intended to be within the spirit and scope of the invention. Accordingly, the foregoing description is by way of example only and is not intended to be limiting. The invention is limited only as defined in the following claims and the equivalents thereto.

Claims

1. A system for reproducing a preceding picture of a user wearing clothes or analog, comprising:

   a screen (4) to display at least a pre-registered picture of the user;
   a clothes type detector (8) to automatically identify the kind of clothes currently worn by the user; and
   a search unit (14) to extract automatically, from at least one central remote database (13), at least one pre-registered picture in which the user wears at least one article of clothing similar to or matchable with the current one.

2. The system of claim 1, further comprising a mirror (2) or analog for reproducing the current appearance of the user.

3. The system of claim 1, further comprising:

   a camera (3) to take a picture of the user wearing clothes; and
   a storage element (6) to store the picture with an identification of the user and an identification of the kind of article of clothing.

4. The system of claim 1, also comprising selecting tools (9) for the user between a comparison and a

Microsoft Ex. 1002 - Page 122 of 451

matching of clothes.

5. The system of claim 1, also comprising a card reader (7) for identifying the user.

6. The system according to claim 1, wherein the database comprises a table with dressing rules.

7. The system of claim 1, also comprising a link (11, 12) to a central remote system (10) comprising said central database (13).

8. A trying-on room comprising a system according to any of claims 1 to 7.

Microsoft Ex. 1002 - Page 123 of 451

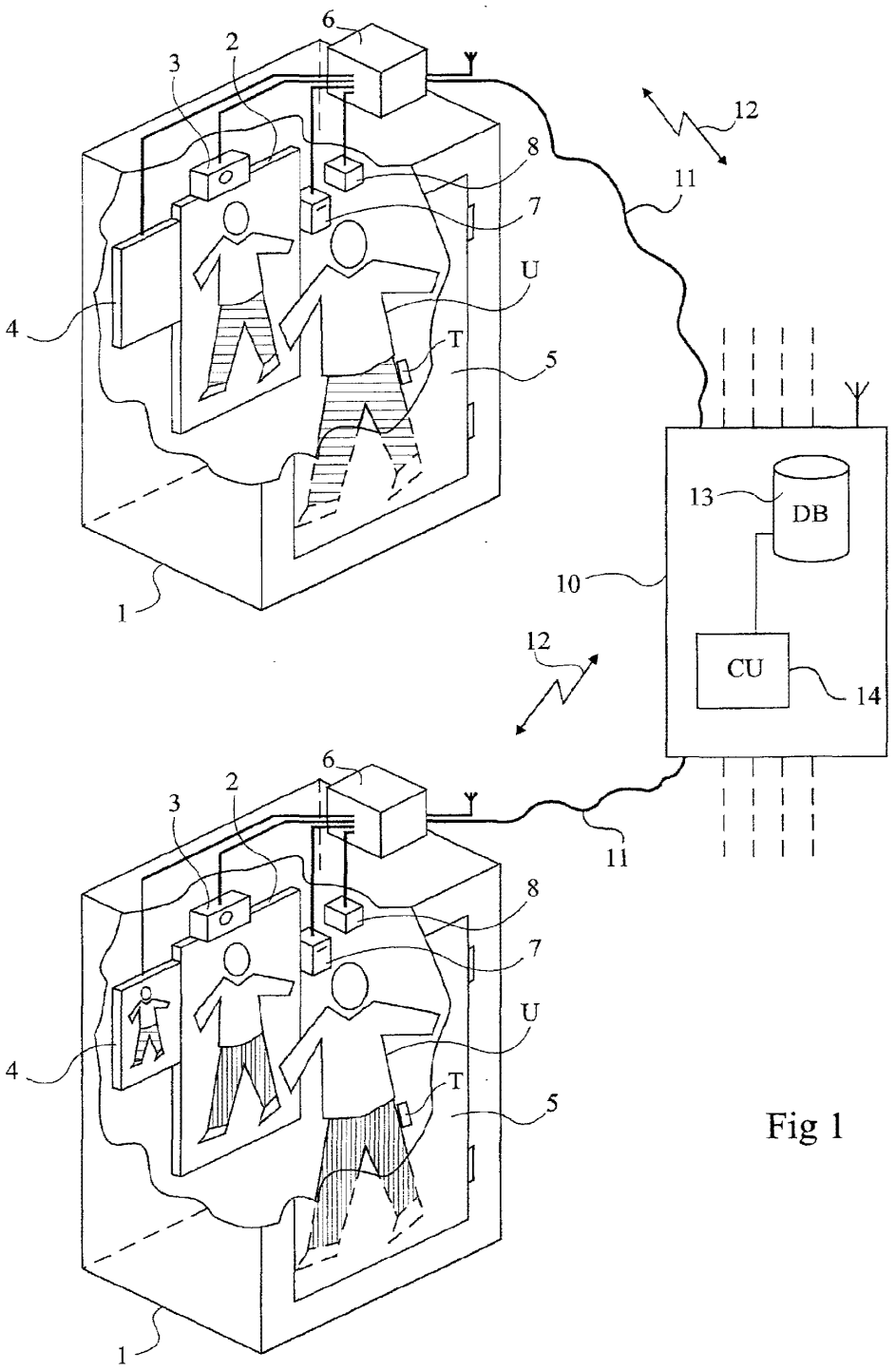

Fig 1

Microsoft Ex. 1002 - Page 124 of 451

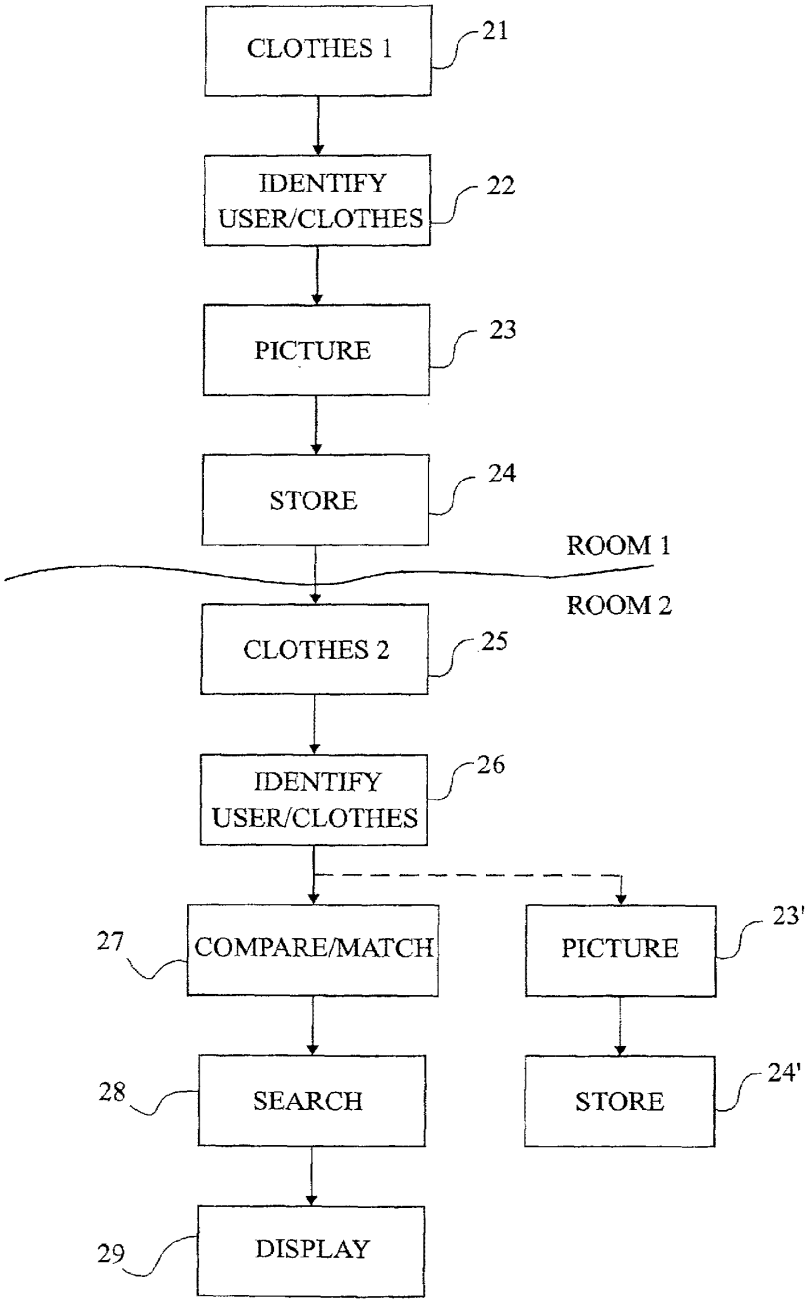

Fig 2

Microsoft Ex. 1002 - Page 125 of 451

European Patent Office

EUROPEAN SEARCH REPORT

Application Number
EP 02 35 4094

DOCUMENTS CONSIDERED TO BE RELEVANT

Category	Citation of document with indication, where appropriate, of relevant passages	Relevant to claim	CLASSIFICATION OF THE APPLICATION (Int.Cl.7)
X	EP 0 636 993 A (OLYMPUS OPTICAL CO) 1 February 1995 (1995-02-01) * column 4, line 16 - column 6, line 43 * * column 8, line 15 - column 9, line 10 * * column 10, line 21 - column 11, line 13 * * figures 1,6,8 * ---	1-8	G06F17/60
X	DE 100 31 965 A (FLOEGEL EBERHARD) 10 January 2002 (2002-01-10) * the whole document * ---	1-8	
A	US 2002/045959 A1 (VAN OVERVELD CORNELIUS WILHELM) 18 April 2002 (2002-04-18) * paragraph '0062! - paragraph '0071!; figures 1,2 * * paragraph '0074! - paragraph '0076! * * paragraph '0081! - paragraph '0086! * * paragraph '0095! - paragraph '0098! * ---	1-8	
A	WO 01 45029 A (LENNON JERRY W) 21 June 2001 (2001-06-21) * page 4, line 5 - page 5, line 9 * * page 5, line 19 - page 6, line 8 * * page 13, line 12 - page 14, line 10 * * figure 1 * -----	1-8	TECHNICAL FIELDS SEARCHED (Int.Cl.7) G06F

The present search report has been drawn up for all claims

Place of search	Date of completion of the search	Examiner
THE HAGUE	10 January 2003	Papastefanou, E

CATEGORY OF CITED DOCUMENTS

X : particularly relevant if taken alone
Y : particularly relevant if combined with another document of the same category
A : technological background
O : non-written disclosure
P : intermediate document

T : theory or principle underlying the invention
E : earlier patent document, but published on, or after the filing date
D : document cited in the application
L : document cited for other reasons

& : member of the same patent family, corresponding document

EPO FORM 1503 03.82 (P04C01)

Microsoft Ex. 1002 - Page 126 of 451

ANNEX TO THE EUROPEAN SEARCH REPORT ON EUROPEAN PATENT APPLICATION NO. EP 02 35 4094

This annex lists the patent family members relating to the patent documents cited in the above-mentioned European search report.
The members are as contained in the European Patent Office EDP file on
The European Patent Office is in no way liable for these particulars which are merely given for the purpose of information.

10-01-2003

Patent document cited in search report		Publication date	Patent family member(s)			Publication date
EP 0636993	A	01-02-1995	JP	7044617	A	14-02-1995
			JP	7225768	A	22-08-1995
			DE	69417963	D1	27-05-1999
			DE	69417963	T2	09-12-1999
			EP	0636993	A1	01-02-1995
			US	5551021	A	27-08-1996
DE 10031965	A	10-01-2002	DE	10031965	A1	10-01-2002
US 2002045959	A1	18-04-2002	WO	0217160	A2	28-02-2002
WO 0145029	A	21-06-2001	AU	4521201	A	25-06-2001
			WO	0145029	A2	21-06-2001
			US	2002073077	A1	13-06-2002

EPO FORM P0459

For more details about this annex : see Official Journal of the European Patent Office, No. 12/82

(19) Europäisches Patentamt
European Patent Office
Office européen des brevets

(11) EP 1 376 207 A1

(12) **EUROPEAN PATENT APPLICATION**

(43) Date of publication:
02.01.2004 Bulletin 2004/01

(21) Application number: **03253912.4**

(22) Date of filing: **20.06.2003**

(51) Int Cl.[7]: **G02F 1/1335**, G02F 1/13357B, G09F 13/12, H04M 1/02, H04M 1/21

(84) Designated Contracting States:
AT BE BG CH CY CZ DE DK EE ES FI FR GB GR HU IE IT LI LU MC NL PT RO SE SI SK TR
Designated Extension States:
AL LT LV MK

(30) Priority: **24.06.2002 JP 2002183490**
07.08.2002 JP 2002230295

(71) Applicant: **SEIKO EPSON CORPORATION**
Shinjuku-ku, Tokyo 163-0811 (JP)

(72) Inventors:
- **Hinata, Shoji**
Suwa-shi, Nagano-ken 392-8502 (JP)
- **Maeda, Tsuyoshi**
Suwa-shi, Nagano-ken 392-8502 (JP)

(74) Representative: **Sturt, Clifford Mark et al**
Miller Sturt Kenyon
9 John Street
London WC1N 2ES (GB)

(54) **Display device with display and mirror modes, and electronic device comprising the same**

(57) In a display device capable of switching between a display mode and a mirror mode, a novel configuration of the display device capable of enhancing display quality and being low-profile and light-weight is provided. In a display device (100), a reflective polarizer (110), a polarizer (120), a retarder (130), a liquid crystal panel (140), a polarizer (150), and a backlight (160) are disposed sequentially from the viewing side. When the liquid crystal panel (140) is set in a light blocking state or the backlight (160) is switched off, the reflection of an outside light "O" turns the display screen into the mirror state. When the backlight (160) is switched on to illuminate the liquid crystal panel (140), a transmitted light "T" allows the displayed screen image to be visually recognized.

FIG. 1

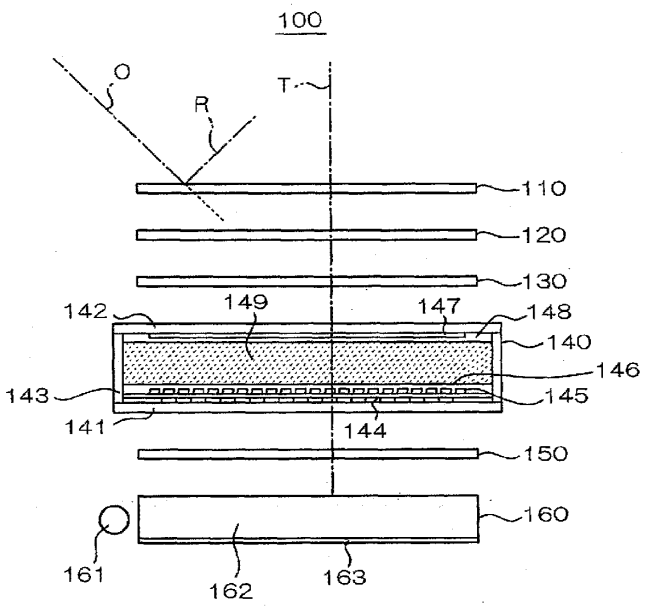

Printed by Jouve, 75001 PARIS (FR)

EP 1 376 207 A1

Description

[0001] The present invention relates to a display device and an electronic device having the same, particularly to a configuration suitable for a display capable of switching a display screen between a display mode and a mirror mode.

[0002] Traditionally, a display device has been known in which two liquid crystal panels are overlaid to switch between the display mode to perform normal display and the mirror mode to change the whole piece into a mirror surface state. For example, there is a display device in which a display switching part is disposed on the viewing side of a display part having the same structure as the general liquid crystal display device and the display switching part is disposed with a reflective type polarizer, a liquid crystal panel and an absorption type polarizer sequentially from the display part side to the viewing side. In this display device, the reflective type polarizer (hereafter, it is simply called reflective polarizer) of the display switching part transmits a first polarized light, and reflects a second polarized light having a polarization axis orthogonal to the first polarized light. The liquid crystal panel is configured to allow switching between the state that the first polarized light is changed to the second polarized light for transmission and the state that the polarization axis is not changed for transmission. The absorption type polarizer transmits the first polarized light and absorbs the second polarized light, for example. The display part emits the first polarized light to the display switching part, and the first polarized light forms a predetermined display image.

[0003] In the display device configured as above, when the liquid crystal panel of the display switching part is in the state that the polarization axis is not changed for transmission, the first polarized light emitted from the display part passes through the reflective polarizer to enter the liquid crystal panel and passes through the absorption type polarizer as the first polarized light for observation. Thus, the display condition of the display part can be visibly recognized (the display mode). When the liquid crystal panel is in the state that the first polarized light is changed into the second polarized light for transmission, the first polarized light emitted from the display part passes through the reflective polarizer to enter the liquid crystal panel, and it is changed into the second polarized light. Thus, it is absorbed by the absorption type polarizer and the display condition is not visually recognized. At this time, when an outside light enters the device, the outside light passes through the absorption type polarizer to be a first polarized light and passes through the liquid crystal panel to be a second polarized light. Therefore, it is reflected by the reflective polarizer, and it passes through the liquid crystal panel again to be changed into the first polarized light, and it passes through the absorption type polarizer. Accordingly, the display plane is visibly recognized as a mirror surface (the mirror mode).

[0004] In the traditional display device, the light having passed through the liquid crystal panel, disposed in the display switching part, is visibly recognized in both the display mode and the mirror mode. Therefore, problems tend to occur : a reduction in contrast due to the interface reflection in the front and back sides of the display switching part, coloring, the deterioration of the viewing angle property, and a blurred display image due to the optical property of the display switching part. In any case, in the traditional display device, degraded display quality is inevitable due to the double structure of the display part and the display switching part.

[0005] Furthermore, in the configuration described above, the display switching part including the liquid crystal panel is further disposed on the viewing side of the normal display part. Thus, there is a problem that the device becomes thicker and heavier. This problem becomes a great disadvantage because portability is impaired, particularly, when the device is mounted in a portable electronic device.

[0006] To solve the problems, the present invention is to provide a novel configuration of a display device capable of suppressing the degradation of display quality such as a reduction in contrast, coloring, a narrowed viewing angle and blur due to the existence of the display switching part, and of being formed to be low-profile and light-weight.

[0007] In order to solve the problems, a first display device of the invention is a display device characterized by having:

a display unit adapted to allow a first polarized light to be emitted as display light; and
a control unit adapted to control the display unit,

wherein the display unit has a polarized light selecting unit on a viewing side thereof,

the polarized light selecting unit transmits the first polarized light and reflects a second polarized light having a polarization axis crossing a polarization axis of the first polarized light, and

the control unit is allowed to switch between a display mode, in which the first polarized light is emitted from the display unit as display light, and a mirror mode, in which the first polarized light is not emitted from the display unit.

[0008] According to the invention, the display unit includes the polarized light selecting unit disposed on the viewing side. The polarized light selecting unit is configured to transmit the first polarized light and reflect the second polarized light.

[0009] Therefore, the first polarized light passing through the polarized light selecting unit is emitted from the display unit as display light. In addition, the first polarized light included in the outside light passes through the polarized light selecting unit to enter the opposite side of the viewing side, and the second polarized light included in the outside light is reflected by the polarized

Microsoft Ex. 1002 - Page 129 of 451

light selecting unit.

[0010] The high intensity light in the outside light generally enters in the direction different from the viewing direction of a viewer. Thus, the specular reflection of the high intensity outside light is hard to enter the viewer's eye. Therefore, in the display mode that display light is visibly recognized from the display unit through the polarized light selecting unit, the display condition, based on the display light emitted from the display unit, can be visibly recognized. On the other hand, when the mirror mode is set by control of the control unit, the first polarized light is not emitted from the display unit. Thus, the light emitted from the display unit does not reach the viewing side. Therefore, the surface on the viewing side of the polarized light selecting unit is visibly recognized as a mirror surface by the reflected light of the outside light.

[0011] As described above, in the invention, the polarized light selecting unit is simply disposed on the viewing side as a component included in the display unit. Therefore, the configuration can be formed in which a transmitting polarization axis varying unit is not disposed on the viewing side of the polarized light selecting unit.

[0012] Accordingly, as compared with the case where the transmitting polarization axis varying unit, such as a liquid crystal panel, is disposed on the viewing side of the traditional display unit, the degradation of display quality such as a reduction in contrast due to the interface reflection, coloring, deterioration of the viewing angle property, and blurred display images due to the optical property of the display switching part can be avoided. Furthermore, a simple structure can be formed without the double panel structure. Therefore, the thickness of the device can be reduced and the weight can be decreased.

[0013] The control unit preferably stops the light emission from the display unit in the mirror mode. Accordingly, the display unit does not emit light, thus the mirror surface quality in the mirror mode can be further enhanced.

[0014] Moreover, a polarized light selecting area of the polarized light selecting unit is preferably extended beyond an area overlapping with a display area of the display unit. The polarized light selecting area of the polarized light selecting unit is extended beyond the area overlapping with the display area of the display unit. Thus, the display unit (an electro-optical panel such as a liquid crystal panel) generally requires the structure portion extending beyond its display area (so-called frame area). Therefore, in the area overlapping with the structure portion, the polarized light selecting area of the polarized light selecting unit can be extended without increasing the plan dimension of the display device. Accordingly, the space inside the display device can be utilized effectively, and the range (area) to be visibly recognized as a mirror in the mirror mode can be expanded relatively with respect to the outer dimensions of the display device.

[0015] The light amount emitted in the direction of the normal is preferably greatest in the emission angle distribution of the display light of the display unit. The light amount emitted in the direction of the normal is set greatest, and thus the ratio of light entering the user's eye for supporting display can be enhanced in the display light. Therefore, the influence of external light reflection by the polarized light selecting unit can be reduced, and display quality can be enhanced.

[0016] In this case, the display light is desirably distributed mainly at an emission angle ranging from zero (0) to forty (40) degrees. In this range of the emission angle, an amount of the emitted outside light is relatively small. Thus, display quality can be enhanced with no influence of external light reflection.

[0017] In addition, the display light in the range exceeding an emission angle of forty five (45) degrees is desirably one fiftieth (1/50) or below of the light amount in the direction of the normal. The light in the range exceeding the emission angle of forty five (45) degrees hardly supports display. Therefore, unnecessary light is reduced to efficiently configure the display condition.

[0018] In each embodiment, the display unit is preferably configured of an electro-optical device. By configuring the display unit with electro-optical devices, a low-profile structure can be allowed and a display device also applicable to a portable device can be realized. Particularly, the display device of the invention can configure the display screen as a mirror surface in the mirror mode by switching. Therefore, it can also be utilized as a hand mirror configured of a portable device.

[0019] Next, a second display device of the invention is a display device having a transmitting polarization axis varying unit characterized by including:

a first polarized light selecting unit disposed on a viewing side of the transmitting polarization axis varying unit; and

a second polarized light selecting unit disposed on a backside of the transmitting polarization axis varying unit,

wherein the first polarized light selecting unit transmits a first polarized light and reflects a second polarized light having a polarization axis crossing a polarization axis of the first polarized light,

the second polarized light selecting unit transmits a third polarized light and absorbs or reflects a fourth polarized light having a polarization axis crossing a polarization axis of the third polarized light, and

the transmitting polarization axis varying unit is allowed to convert at least a part of the third polarized light to the first polarized light.

[0020] According to the invention, the first polarized light selecting unit (reflective polarizer) disposed on the viewing side reflects the outside light. Thus, the display screen is allowed to be set in the mirror mode, when the

Microsoft Ex. 1002 - Page 130 of 451

liquid crystal panel does not emit light. When the liquid crystal panel emits light, the display screen is allowed to be set in the display mode. The outside light has a greater light amount incident, incidenting obliquely with respect to the user. Thus, a high intensity specular reflection light generated in the first polarized light selecting unit due to the outside light is not visually recognized by the user. Therefore, by intensifying the emitting light from the liquid crystal panel to some extent, display quality in the display mode can be secured. In addition, the mirror mode can be substantially realized only by the first polarized light selecting unit. Accordingly, the degraded display quality due to the double panel structure can be avoided, and the display device can be formed to be low-profile and light-weight.

[0021] In the invention, another transmitting polarization axis varying unit is not preferably disposed on the viewing side of the first polarized light selecting unit. A reduction in visibility can be suppressed in the display mode by not disposing another transmitting polarization axis varying unit (a liquid crystal panel, for example) on the viewing side of the first polarized light selecting unit.

[0022] In the invention, a third polarized light selecting unit, adapted to transmit the first polarized light and to absorb the second polarized light, is preferably disposed between the first polarized light selecting unit and the transmitting polarization axis varying unit. Generally, the polarized light selectivity of a member available as the first polarized light selecting unit (reflective polarizer) is lower than the polarized light selectivity of the absorption type polarizer. Thus, a contrast in the display mode drops when the member is used as it is, but a disposition of the third polarized light selecting unit (absorption type polarizer) enhances the polarized light selectivity. Therefore, display contrast can be enhanced.

[0023] Preferably, this case has a lighting device on the backside of the second polarized light selecting unit,

wherein the second polarized light selecting unit transmits the third polarized light and absorbs the fourth polarized light,

a fourth polarized light selecting unit is disposed between the second polarized light selecting unit and the lighting unit, and

the fourth polarized light selecting unit preferably reflects the fourth polarized light as well as transmits the third polarized light. Accordingly, display contrast and brightness can be further enhanced.

[0024] In the invention, the second polarized light selecting unit preferably transmits the third polarized light and reflects the fourth polarized light. The second polarized light selecting unit is formed to transmit the third polarized light and to reflect the fourth polarized light (reflective polarizer). Consequently, the light not passing through the second polarized light selecting unit can be reflected to return to the backside in the luminous light when the liquid crystal panel is lit from the backside. Because it is possible to convert the polarization state of the reflected light by scattering or reflection to return to the viewing side, a brighter display can be configured.

[0025] In the invention, the surface on the viewing side of the first polarized light selecting unit is preferably flat. By flattening the surface on the viewing side of the first polarized light selecting unit, a further excellent mirror surface state in the mirror mode can be realized, and the scattered light other than the specular reflection light of the outside light entering the user's eye can be reduced in the display mode. Therefore, the visibility of the display condition can be enhanced. This characteristic is similarly applicable to the above-mentioned first and second display devices, considering that the polarized light selecting unit is equivalent to the first polarized light selecting unit.

[0026] In the invention, a transparent protective film is preferably formed on the surface on the viewing side of the first polarized light selecting unit. Accordingly, the surface on the viewing side of the first polarized light selecting unit can be prevented from being directly scratched or from being adhered with dust and dirt. Desirably in this case, the surface of the protective film is hardened or a transparent hard film is formed thereon. Furthermore, this characteristic is similarly applicable to the first and second display devices, considering that the polarized light selecting unit is equivalent to the first polarized light selecting unit.

[0027] In the invention, a lighting unit adapted to emit light to the viewing side is preferably disposed on the backside of the second polarized light selecting unit. Disposing the lighting unit surely realizes the image display state in the display mode.

[0028] In this case, a light reflection component for reflecting outside light to the viewing side in the form of supporting display is preferably not disposed between the first polarized light selecting unit and the lighting unit. Accordingly, the light reflection component is not disposed inside the display to form a transmissive type display. Consequently, the light utilization efficiency of the lighting unit for display can be enhanced. Therefore, the display condition can be visually surely recognized regardless of the existence of external light reflection by the first polarized light selecting unit. The light reflection component includes a reflective layer or a reflective plate disposed in the pixel area, in which the reflected light is supportable for display, but it does not include a metal shading film, which generates the reflected light not supporting display.

[0029] The transmitting polarization axis varying unit is desirably in the state not to emit the first polarized light when the lighting unit is not lit. The mirror mode can be realized in either states that the lighting unit is not lit or the light of display is blocked. However, by setting the lighting unit in the unlit state and the display in the light blocking state, light leakage can be further reduced. Therefore, the mirror surface state in the mirror mode can be formed more excellently.

[0030] In the invention, a polarized light selecting area of the first polarized light selecting unit is preferably ex-

Microsoft Ex. 1002 - Page 131 of 451

tended beyond the area overlapping with a transmitting polarization axis varying area of the transmitting polarization axis varying unit. When the polarized light selecting area of first polarized light selecting unit is extended beyond the area overlapping with the transmitting polarization axis varying area of the transmitting polarization axis varying unit, the transmitting polarization axis varying unit (liquid crystal panel) generally requires the structure portion (so-called frame area) extended beyond the transmitting polarization axis varying area (display area). Therefore, the polarized light selecting area of the first polarized light selecting unit can be extended correspondingly to the structure portion without upsizing the display device. Accordingly, the inner space of the display device can be utilized efficiently, and the range (area) to be visibly recognized as a mirror in the mirror mode can be expanded relatively with respect to the outer dimensions of the display device. In addition, this characteristic is similarly applicable to the first and second display devices, considering that the polarized light selecting unit is equivalent to the first polarized light selecting unit and the display area of the display unit is equivalent to the transmitting polarization axis varying area.

[0031] In the invention, the light amount emitted in the direction of the normal is preferably greatest in the emission angle distribution of luminous light of the lighting unit. By setting the light amount emitted in the direction of the normal at greatest, the ratio of the light entering the user's eye for supporting display in the luminous light can be increased in the display mode. Therefore, the influence of external light reflection due to the first polarized light selecting unit can be decreased, and display quality can be enhanced.

[0032] In this case, the luminous light of the lighting unit is desirably distributed mainly at an emission angle ranging from zero (0) to forty (40) degrees. In the range of the emission angle, the amount of specular reflection of outside light is relatively small. Therefore, display quality can be enhanced with no influence of external light reflection.

[0033] Furthermore, the luminous light of the lighting unit within the range exceeding an emission angle of forty five (45) degrees is desirably one fiftieth (1/50) or below of a light amount in the direction of the normal. The light in the range exceeding an emission angle of forty-five (45) degrees does not support display so much. Thus, unnecessary light is reduced to efficiently realize the display state in the display mode.

[0034] In the invention, a color filter is preferably disposed on the backside of the first polarized light selecting unit. By disposing the color filter on the backside of the first polarized light selecting unit, color display in the display mode can be realized.

[0035] In the invention, a retarder is preferably disposed between the first polarized light selecting unit and the transmitting polarization axis varying unit. The retarder can be used as an optical compensator for reducing coloring, or a viewing angle compensator for improving the viewing angle property.

[0036] In the invention, it is preferable that a transparent member is disposed on the viewing side of the first polarized light selecting unit, and the first polarized light selecting unit is directly or indirectly closely contacted with the transparent member. The first polarized light selecting unit is closely contacted with the transparent member, which allows the surface on the viewing side of the first polarized light selecting unit to be protected and the first polarized light selecting unit can surely be positioned and held. This characteristic is similarly applicable to the first and second display devices, considering that the polarized light selecting unit is equivalent to the first polarized light selecting unit.

[0037] In this case, the first polarized light selecting unit is desirably bonded to the transparent member via a transparent substance.

[0038] As the form that the first polarized light selecting unit is fixed to the transparent member, two cases are named: the case where only the first polarized light selecting unit is fixed to the transparent member, and the case where the display unit or the transmitting polarization axis varying unit is fixed along with the first polarized light selecting unit. In the latter case, it is preferable to fix the transparent member via a transparent bonding layer having elasticity. Accordingly, the influence of an external stress (such as shock) on the display unit and the transmitting polarization axis varying unit can be relaxed, and the shock-resistance of the display device can be enhanced. In addition, this characteristic is similarly applicable to the first and second display devices, considering that the polarized light selecting unit is equivalent to the first polarized light selecting unit.

[0039] Furthermore, the surface of the transparent member on the first polarized light selecting unit is desirably flat. Accordingly, the surface on the backside of the transparent member is made flat. Therefore, the surface on the viewing side of the first polarized light selecting unit closely contacted with the surface can be formed flat. Particularly, the first polarized light selecting unit is available as a sheet material having flexibility. Thus, the surface on the backside of the transparent member is formed flat and the first polarized light selecting unit is closely contacted or bonded to the surface, which allows the first polarized light selecting unit to be kept flat. Therefore, the mirror surface state in the mirror mode can be high quality. Furthermore, this characteristic is similarly applicable to the first and second display devices, considering that the polarized light selecting unit is equivalent to the first polarized light selecting unit.

[0040] Moreover, the surface on the viewing side of the transparent member is desirably a curved surface. Accordingly, the transparent member can be used as an optical lens, which allows the display screen to be visibly recognized in a properly enlarged or reduced state. This characteristic is similarly applicable to the first and second display devices, considering that the polarized light

Microsoft Ex. 1002 - Page 132 of 451

selecting unit is made equivalent to the first polarized light selecting unit.

[0041] Next, an electronic device of the invention is provided with the display device according to any one of the above. As described above, the display device is configured to be switchable between the display mode and the mirror mode by only disposing the polarized light selecting unit on the viewing side of the display unit. Therefore, degraded display quality can be avoided, and also the electronic device can be reduced in size and weight. Accordingly, the electronic device is preferably configured as portable electronic devices such as a mobile phone and a personal information terminal.

[0042] In addition, another electronic device of the invention has the display device according to any one of the above and a display drive unit adapted to drive the transmitting polarization axis varying unit. The display device is switchable, as described above, between the display mode and the mirror mode without disposing another transmitting polarization axis varying unit on the viewing side. Therefore, display quality in the display mode can be improved. Particularly, the display device can be formed to be low-profile and light-weight, and thus the electronic device is preferably configured as portable electronic devices such as a mobile phone and a personal information terminal.

[0043] Furthermore, another electronic device of the invention has:

a display device with a lighting unit;
a display drive unit adapted to drive the transmitting polarization axis varying unit; and
a lighting control unit adapted to control the lighting unit. Particularly, by configuring the display drive unit and the lighting control unit to operate together, it is possible to set lighting unit in the unlit state and at the same time, it is possible to set the light blocking state by controlling the transmitting polarization axis varying unit. Accordingly, light leakage can be reduced in the mirror mode, and the mirror surface state can be configured in a further excellent form.

[0044] Moreover, still another electronic device of the invention is characterized by having a display unit adapted to allow light emission,

wherein the display unit has a polarized light selecting unit adapted to transmit a first polarized light and to reflect a second polarized light having a polarization axis crossing a polarization axis of the first polarized light on a viewing side thereof, and

a transmissive display mode, in which the first polarized light is emitted from the polarized light selecting unit to the viewing side of the display unit to allow the first polarized light to be observed on the viewing side, and a mirror mode, in which the first polarized light is not emitted from the polarized light selecting unit to the viewing side of the display unit, and the polarized light selecting unit is used as a mirror on the viewing side of the display unit, are switchable.

[0045] Preferably, the electronic device further has an input part for allowing an operation of the display device or performing data input to the display in the display device,

wherein the input part is preferably manually operated to allow switching between the transmissive display mode and the mirror mode.

[0046] Manually operating the input part of the electronic device allow switching between the transmissive display mode and the mirror mode. Therefore, any one of the transmissive display mode and the mirror mode can be implemented at any time at the user's wish. Here, as the input part, various manual operation buttons such as a data input key button, various operation switches such as a power switch, and operation members such as a operation dial can be named.

[0047] Embodiments of the present invention will now be described by way of further example only and with reference to the accompanying drawings, in which:-

Fig. 1 is a schematic diagram illustrating the configuration of the display device of the first embodiment in the invention;
Fig. 2 is a schematic diagram illustrating the configuration of the display device of the second embodiment in the invention;
Fig. 3 is a schematic diagram illustrating the configuration of the display device of the third embodiment in the invention;
Fig. 4 is a schematic diagram illustrating the configuration of the display device of the fourth embodiment in the invention;
Fig. 5 is a schematic diagram illustrating the configuration of the display device of the fifth embodiment in the invention;
Fig. 6 is a schematic diagram illustrating the configuration of the display device of the sixth embodiment in the invention;
Fig. 7 is a schematic diagram illustrating the configuration of the display device of the seventh embodiment in the invention;
Fig. 8 is a schematic diagram illustrating the configuration of the display device of the eighth embodiment in the invention;
Fig. 9 is a schematic diagram illustrating the configuration of the display device of the ninth embodiment in the invention;
Fig. 10 is an enlarged vertical cross-sectional view illustrating the enlarged EL panel structure of the ninth embodiment;
Fig. 11 is a graph illustrating the luminance of the backlight against the emission angle distribution of the tenth embodiment in the invention;
Fig. 12 is a schematic block diagram illustrating the configuration of the display control system in the electronic device provided with the display device;
Fig. 13 is a schematic perspective view illustrating

Microsoft Ex. 1002 - Page 133 of 451

the appearance of the electronic device (mobile phone); and

Fig. 14 is a schematic perspective view illustrating another electronic device (mobile phone).

[First embodiment]

[0048] First, the configuration of a first embodiment in the invention will be described with reference to Fig. 1. In a display device 100 shown in Fig. 1, a reflective polarizer 110, a polarizer 120, a retarder 130, a liquid crystal panel 140, a polarizer 150, and a backlight 160 are sequentially disposed from the viewing side (the upper side in the drawing).

[0049] The reflective polarizer 110 transmits a polarized light component having a vibration plane in parallel to the transmitting polarization axis, and reflects a polarized light component having a vibration plane in parallel to the direction crossing (preferably orthogonal) the transmitting polarization axis . As the reflective polarizer, a multilayer product having birefringent polymer films different from each other laminated, that is the multilayer product described in PCT/A/WO95/27919, or a product having a quarter (1/4) wavelength plates disposed on the front and back sides of a cholesteric liquid crystals can be used. As the multilayer product, there is a multilayer film, whose trade name is DBEF, provided by Minnesota Mining & Manufacturing Co.

[0050] As the polarizers 120 and 150, a publicly-known absorption type polarizer is used, which transmits the polarized light component having the vibration plane in parallel to the transmitting polarization axis and absorbs the polarized light component having the vibration plane in parallel to the direction crossing the transmitting polarization axis (preferably orthogonal). The polarizer 120 and the polarizer 150 are arranged in a required configuration of the liquid crystal device (for example, they are arranged in the crossed Nicols when the liquid crystal panel 140 is a TN liquid crystal cell having a twisted angle of ninety (90) degrees).

[0051] The polarizer 120 is disposed so that the transmitting polarization axis is matched with the transmitting polarization axis of the reflective polarizer 110. The crossed axes angle between the transmitting polarization axis of the reflective polarizer 110 and the transmitting polarization axis of the polarizer 120 is not necessarily zero degree. However, display contrast is reduced as the crossed axes angle becomes greater. Therefore, the crossed axes angle is desirably fifteen (15) degrees or below, particularly five (5) degrees or below.

[0052] Optically, the polarizer 120 can be omitted. However, the polarized light selectivity of the reflective polarizer 110 (the ratio of the polarized light component having the vibration plane in parallel to the transmitting polarization axis in the transmitted light with respect to the incident natural light) is generally lower than that of the absorption type polarizer. Thus, when the polarizer 120 is omitted, a contrast in the display mode is reduced. Inversely, when the polarization degree of the reflective polarizer (the polarized light selecting unit or first polarized light selecting unit) does not cause a problem, the absorption type polarizer (the third polarized light selecting unit) included in the display unit can be omitted for configuration. In this case, the function is served by the reflective polarizer (the polarized light selecting unit or first polarized light selecting unit). In addition, this is similarly applicable to all the embodiments including the absorption type polarizer described below (the third polarized light selecting unit).

[0053] Furthermore, as the polarizer 150, a reflective polarizer similarly configured to the reflective polarizer 110 can be used, instead of the absorption type polarizer.

[0054] The retarder 130 functions as an optical compensator for reducing display coloring, particularly, when the liquid crystal panel 140 is the STN mode. It can also be configured to function as a viewing angle compensator for improving the viewing angle dependency of liquid crystal display. Display itself is feasible without disposing the retarder 130.

[0055] The liquid crystal panel 140 includes two substrates 141 and 142 formed of a transparent substrate such as glass or plastic. Over the inner surface of the substrate 141, a color filter 144 is formed. In the color filter 144, a plurality of colored layers, for example, red, green and blue, are arranged in a predetermined array pattern (such as a stripe array, a delta array, and a diagonal mosaic array). These colored layers are preferably covered with a transparent protective film.

On the color filter 144, a transparent electrode 145 configured of ITO or the like is formed corresponding to the array of the colored layer. Over the transparent electrode 145, an alignment layer 146 configured of polyimide resin is formed. In addition, over the inner surface of the substrate 142, a transparent electrode 147 and an alignment layer 148 similar to the above are formed.

[0056] In the panel structure, it is acceptable that a pair of substrates forming the panel structure is any of those using glass as the material (including silica), those using resins (plastic), or those using glass for one substrate and a resin for the other substrate. Particularly, by using a resin material for the material of the substrates, the device can be formed low-profile and can enhance the shock-resistance as well.

[0057] The substrates 141 and 142 are bonded by a sealing material 143, and liquid crystal 149 are disposed inside thereof. As the liquid crystal mode of the liquid crystal panel 140 thus configured, the TN (Twisted Nematic) mode, the STN (Super Twisted Nematic) mode, and the ECB (Electrically Controlled Birefringence) mode are preferable. In all the display method according to these liquid crystal modes, the liquid crystal panel is configured to realize the display condition with the use of the polarizer. Thus, high display quality can be obtained at a relatively low drive voltage, which is particularly desirable when it is mounted in a portable

Microsoft Ex. 1002 - Page 134 of 451

electronic device.

[0058] Furthermore, as the drive mode of the liquid crystal panel 140, any of the active drive mode including the active matrix drive using an active device such as a TFT (Thin Film Transistor) and a TFD (Thin Film Diode), or the passive drive mode including the simple drive without using the active device or the multiplex drive, is acceptable.

[0059] Moreover, in the embodiment, the liquid crystal panel 140 is a transmissive type panel with no reflective layer or reflector inside or outside. More specifically, the embodiment does not have a light reflection component (reflecting surface) for reflecting the outside light to the viewing side in the pixel, which is different from a reflective type panel or a semi-transmissive reflective type panel. The above mentioned light reflection component means a component having a light reflecting function inside the area for supporting display (in the pixel), which is a concept not containing a metal light blocking layer that does not support display. Of course, the light reflection component not supporting display such as a metal shading film desirably does not exist.

[0060] It is acceptable to use a backlight 160 that can light the liquid crystal panel 140 from behind with nearly uniform illuminance. For example, an edge emitting type backlight including a light guide plate and a light source disposed in the end face part of the light guide plate, and a back emitting type backlight including a light guide plate and a light source disposed on the backside of the light guide plate, are named. In the example shown in the drawing, it has a light source 161 and a light guide plate 162 having the light source 161 disposed to its end face. Preferably, a light reflection component, such as a metal layer or a printed layer for nearly uniformly guiding the light incident from the light source 161 to the liquid crystal panel 140 side, or a scattering component 163, is disposed in the light guide plate 162.

[0061] In the embodiment, the polarizer 120, the retarder 130, the liquid crystal panel 140, the polarizer 150 and the backlight 160 configure the display unit. Basically, this display unit emits only the first polarized light to the reflective polarizer 110. In the display mode, the first polarized light is controlled to be emitted or not to be emitted, or an amount of the first polarized light to be emitted is controlled on each of a plurality of pixels formed in the liquid crystal panel 140. Consequently, a predetermined display image is formed.

[0062] In the display device 100 of the embodiment, the backlight 160 is set in the lit state and a voltage applied between the transparent electrodes 145 and 147 of the liquid crystal panel 140 is controlled. Thus, predetermined display is performed in a liquid crystal display formed of the polarizer 120, the retarder 130, the liquid crystal panel 140 and the polarizer 150. Therefore, the display mode that the light emitted from the polarizer 120 passes through the reflective polarizer to be visibly recognized can be realized.

In addition, by setting the liquid crystal display in the off (light blocking) state, that is, setting all the pixels of the liquid crystal display in the light blocking state, or setting the backlight 160 in the unlit state, the mirror mode that a display plane is visibly recognized as a mirror can be realized.

[0063] In the display device 100, an outside light "O" enters from the viewing side in the normal service conditions. However, a portion of the outside light "O", that is the polarized light component having the vibration plane in parallel to the transmitting polarization axis of the reflective polarizer 110 passes through the reflective polarizer 110, and is guided to inside. The polarized light component having the vibration plane orthogonal to the transmitting polarization axis of the reflective polarizer 110 is reflected by the reflective polarizer 110, and is returned to the viewing side as a reflected light "R." On the other hand, the luminous light radiated from the backlight 160 passes through the polarizer 150 to be a linear polarized light. Its polarization state is converted in the liquid crystal panel 140, or the light passes as it is without being converted. Only the polarized light component having the vibration plane in parallel to the transmitting polarization axis of the polarizer 120 is emitted from the polarizer 120. This polarized light component also passes thorough the reflective polarizer 110 as it is, and it is visibly recognized on the viewing side. Accordingly, when the liquid crystal display is in the state of displaying a particular image, the light passes in the transparent area formed according to the display image, and it passes through the reflective polarizer 110 to be visibly recognized as a transmitted light "T."

[0064] In the display mode, the particular display image is visually recognized by the transmitted light "T," but the reflected light "R" due to the outside light "O" exists at this time. Thus, the visibility of the display image seems to be reduced. However, the outside light "O" usually enters the display device 100 from the direction different from the user's viewing direction. Therefore, the light amount of the reflected light "R" (the specular reflection light), generated in the reflective polarizer 110 and directly entering the user's eye, is small, and most of it is reflected in the direction different from the user's eye as shown in the drawing. Accordingly, when the transmitted light "T" is intense enough, a reduction in the visibility of the display image due to the reflected light "R" can be limited.

[0065] In the mirror mode, the liquid crystal display is in the light blocking state, or the backlight 160 is in the unlit state, thus the transmitted light "T" is almost eliminated. Therefore, the reflected light R is felt more intense correspondingly, and the entire display plane is visibly recognized as a mirror.

[0066] Furthermore, when the mirror mode is configured, it is preferable to set the backlight 160 in the unlit state as well as to set the liquid crystal display in the light blocking state. When this is done, light leakage can be prevented nearly perfectly. Accordingly, the transmitted light "T" can be further reduced, and a more excel-

Microsoft Ex. 1002 - Page 135 of 451

lent mirror surface state can be obtained.

[0067] In the embodiment, the reflective polarizer 110 is disposed on the viewing side. Thus, a significantly excellent mirror surface state can be obtained. In addition to this, another liquid crystal panel does not exist on the viewing side of the liquid crystal display, and therefore the influence on the display image can be reduced as well. Accordingly, display quality can be kept excellently as well. Moreover, the embodiment does not have the double layer panel structure. Therefore, the display device can be formed to be low-profile and light-weight can be achieved as well.

[0068] Moreover, the surface on the viewing side of the reflective polarizer 110 is preferably flat. When the surface on the viewing side of the reflective polarizer 110 is flat, the mirror surface state can be configured more excellently, and quality as a mirror can be enhanced. Thus the situation that the specular reflection light of the outside light "O" having high intensity tends to enter the user's eye in the display mode will not occur. (Such a situation may occur when the surface is not flat.) Therefore, the visibility of the display image can be prevented from being reduced. Preferably, the surface is optically flat (optical flat), particularly, in the visible light area.

[Second embodiment]

[0069] Next, a second embodiment in the invention will be described with reference to Fig. 2. In this embodiment, the same components as the first embodiment are designated the same numerals and signs, and omitting the description for them. In the embodiment, a reflective polarizer 110, a polarizer 120, a retarder 130, a liquid crystal panel 140, a polarizer 150, and a backlight 160 are sequentially disposed from the viewing side. The different point from the first embodiment is in that a reflective polarizer 170 is further disposed between the polarizer 150 and the backlight 160. This reflective polarizer 170 is the same as the reflective polarizer 110, but its transmitting polarization axis is disposed in the attitude matched with the transmitting polarization axis of the polarizer 150.

[0070] In the embodiment, the reflective polarizer 170 reflects the polarized light component of the luminous light emitted from the backlight 160, which does not pass through the polarizer 150, to the backlight 160 side. The reflected polarized light component enters the light guide plate 162, and the polarization state of at least a part of light is changed and reflected to the viewing side again. A part thereof passes through the reflective polarizer 170 and the polarizer 150 to be a part of the transmitted light "T." Accordingly, a part of light not utilized for display in the first embodiment can be reused. Thus, the brightness of the display image can be enhanced, and display quality in the display mode can be enhanced.

[0071] In the embodiment, it is also possible that the polarizer 150 is omitted to allow display of the liquid crystal display only by the reflective polarizer 170. However, in this case, the polarized light selectivity of the reflective polarizer 170 (the transmittance of the polarized light component having the vibration plane in parallel to the transmitting polarization axis, or the reflectance of the polarized light component having the vibration plane orthogonal to the transmitting polarization axis) is lower than that of the absorption type polarizer. Thus, display contrast is reduced, or display brightness is deceased. In addition, at least a part of the light in the outside light "O" having transmitted through the reflective polarizer 110 on the viewing side (for example, the light to enter a pixel in the light blocking state) is likely to be reflected on the reflective polarizer 170. And, it can be considered that the reflection causes the visibility of the display image to be reduced.

[Third embodiment]

[0072] Next, a third embodiment in the invention will be described with reference to Fig. 3. In this embodiment, the same components as the second embodiment are designated the same numerals and signs, and omitting the description for them. In the embodiment, a reflective polarizer 110, a polarizer 120, a retarder 130, a liquid crystal panel 140, a polarizer 150, a reflective polarizer 170, and a backlight 160 are disposed sequentially from the viewing side. A transparent protective film 111 is further formed on the surface on the viewing side of the reflective polarizer 110.

[0073] The protective film 111 can be formed of a thin film such as acryl resin, SiO_2 and TiO_2. Particularly, it is preferably a hard protective film having a hardness equal to or greater than inorganic glass such as SiO_2 and TiO_2. It is acceptable that the protective film is a product bonded with a film or sheet formed of a transparent material, or a product directly deposited on the surface of the reflective polarizer 110 by coating, evaporation, and sputtering.

[0074] In the embodiment, the transparent protective film 111 is formed on the surface on the viewing side of the reflective polarizer 110. Therefore, the surface of the reflective polarizer 110 can be prevented from being scratched, or a foreign matter can be prevented from adhering thereto. Accordingly, the mirror surface state can be configured excellently in particular.

[Fourth embodiment]

[0075] Next, a fourth embodiment in the invention will be descried with reference to Fig. 4. In this embodiment, the same components as the second embodiment are designated the same numerals and signs, and omitting the description for them. In the embodiment, a reflective polarizer 110, a polarizer 120, a retarder 130, a liquid crystal panel 140, a polarizer 150, a reflective polarizer 170, and a backlight 160 are disposed sequentially from the viewing side.

Microsoft Ex. 1002 - Page 136 of 451

[0076] In the embodiment, the mirror area (polarized light selecting area) "B" occupied by the reflective polarizer 110 is configured to cover an area wider than the display area "A" (that is, the display area of the liquid crystal display formed of the polarizer 120, the liquid crystal panel 140 and the polarizer 150) of the display unit. More specifically, the mirror area "B" is configured to extend beyond the area two-dimensionally overlapping with the display area "A" for further extension.

[0077] For the liquid crystal panel 140, it is needed to provide the area bonded with a sealing material 143 and the area formed with input terminals (not shown in the drawing) on the outside the area around the display area "A." Consequently, a frame-like portion (so-called frame area) exists to some extent around the display area "A" as the display device 100. However, by covering this portion with the reflective polarizer 110, a wider mirror area can be formed without upsizing the display device.

[0078] In addition, the configuration of the fourth embodiment is applicable to any of the first embodiment to the third embodiment.

[Fifth embodiment]

[0079] Next, a more specific configuration of the first embodiment will be described as a fifth embodiment with reference to Fig. 5. In the embodiment, as shown in Fig. 5, a transparent plate 180 is disposed on the viewing side of a reflective polarizer 110. Then, the reflective polarizer 110 is closely contacted with the transparent plate 180. As the transparent plate 180, for example, a display window member (a display window exposed to outside) of the display part of an electronic device (described later) is named, for example. The transparent plate 180 can be formed of a transparent material such as acryl resin or glass. For example, the reflective polarizer 110 is bonded to the transparent plate 180 with a transparent adhesive 181. The surface on the backside of the transparent plate 180 (the under side in the drawing) is formed to be flat. Accordingly, the surface on the viewing side of the closely contacted reflective polarizer 110 is formed to be flat.

[0080] In the embodiment, a polarizer 120 and a retarder 130 are also directly or indirectly fixed to the transparent plate 180 along with the reflective polarizer 110. For example, the polarizer 120 is bonded to the reflective polarizer 110, and furthermore, the retarder 130 is bonded to the polarizer 120.

[0081] In the embodiment, a liquid crystal panel 140 and a backlight 160 are not fixed to the transparent plate 180 or to the polarizer 120 or the retarder 130 fixed thereto. In this case, the liquid crystal panel 140 can be fixed inside the device separately (for example, fixed on a circuit board) from the transparent plate 180, and a gap can be provided between the liquid crystal panel 140 and the multilayer structure fixed to the transparent plate 180. When this is done, the liquid crystal panel 140 is disposed inside the device separately from the multilayer structure including the reflective polarizer 110. Thus, product yields can be improved in the fabrication processes. Of course, the liquid crystal panel 140 and a polarizer 150 can also be fixed and integrated to the transparent plate 180.

[0082] Furthermore, the polarizer 150 is preferably bonded over the outer face of a substrate 141 on the backside of the liquid crystal panel 140. Moreover, the liquid crystal panel 140 and the backlight 160 are disposed with a gap in the drawing, but it is acceptable that they are closely contacted or bonded to each other. More specifically, it is acceptable that the polarizer 150 is closely contacted or bonded to the viewing side of a light guide plate 162.

[0083] The fixing structure to the transparent plate 180 can be applicable not only to the first embodiment but also to any of the second embodiment to the fourth embodiment in completely the same manner.

[Sixth embodiment]

[0084] Next, a sixth embodiment in the invention will be described with reference to Fig. 6. In this embodiment, a transparent plate 180 is disposed as similar to that in the fifth embodiment. Then, a reflective polarizer 110 is bonded to the transparent plate 180 by a transparent adhesive 181 such as acryl resin. The surface on the backside of the transparent plate 180 is formed to be flat, and the reflective polarizer 110 fixed to the surface exerts the same effect and advantage as the fifth embodiment. In this embodiment, a polarizer 120, a retarder 130, a liquid crystal panel 140 and a polarizer 150 are fixed to the transparent plate 180 along with the reflective polarizer 110.

[0085] In the embodiment, the transparent adhesive 181 is preferably formed to have a thickness of 0.3 mm or greater. Accordingly, the fixing structure of the transparent plate 180 to the liquid crystal panel 140 is allowed to have sufficient elasticity when the transparent plate 180 is fixed to a case of an electronic device. Therefore, the liquid crystal panel 140 can be protected against impact or the like.

[0086] In addition, the configuration of the embodiment is applicable to any of the first to fourth embodiments.

[Seventh embodiment]

[0087] Next, a seventh embodiment in the invention will be described with reference to Fig. 7. This embodiment depicts the configuration of the second embodiment more specifically. In the embodiment, a reflective polarizer 110 is closely contacted with a transparent plate 190. The reflective polarizer 110 is fixed to the transparent plate 190. Particularly, the reflective polarizer 110 is preferably bonded to the transparent plate 190 by a transparent adhesive 191 the same as that in the above described embodiments. The transparent

Microsoft Ex. 1002 - Page 137 of 451

plate 190 can be formed of the same material as the transparent plate 180 shown in the first embodiment. The surface on the backside of the transparent plate 190 is formed to be flat, and the reflective polarizer 110 fixed to this surface exerts the same effect and advantage as the first embodiment. In addition, a polarizer 120 and a retarder 130 are closely contacted with the reflective polarizer 110. They are also preferably bonded to each other by an adhesive layer or an adhesive.

[0088] A polarizer 150 and a reflective polarizer 170 are fixed to a liquid crystal panel 140. The polarizer 150 and the reflective polarizer 170 are preferably bonded to each other by an adhesive layer or an adhesive.

[0089] In the transparent plate 190, at least a portion of the surface corresponding to the display area is a curved surface 190A in the surface on the viewing side. Accordingly, the transparent plate 190 has the same function as an optical lens, which allows the display screen formed of a display device 100 to be visibly recognized in an enlarged or reduced state. For example, the curved surface 190A is formed into a convex curve as shown in the drawing, and thus the display screen can be visibly recognized in the enlarged state. Therefore, letters can be enlarged to enhance visibility when the display area of the display device is small.

[0090] Also in this case, not only the reflective polarizer 110, but also the polarizer 120 and the retarder 130 can be fixed to the transparent plate 190. Moreover, the liquid crystal panel 140 and the polarizer 150 (the reflective polarizer 170 as well) can also be fixed to the transparent plate 190 as integrated parts as similar to the sixth embodiment. The configuration including the transparent plate 190 can of course be applicable to the first to fifth embodiments and the other embodiments shown below.

[Eighth embodiment]

[0091] Next, an eighth embodiment in the invention will be descried with reference to Fig. 8. In this embodiment, a reflective polarizer 110 is closely contacted with the backside of a transparent plate 180 the same as that in the fifth embodiment. The reflective polarizer 110 is fixed to the transparent plate 180 by a transparent adhesive 181 similar to that in the fifth embodiment. In the embodiment, only the reflective polarizer 110 is fixed to the transparent plate 180. A polarizer 120, a retarder 130, a liquid crystal panel 140, a polarizer 150 and a backlight 160, which configure a display unit, are disposed with gap to the transparent plate 180 and the reflective polarizer 110.

[0092] In this embodiment, the display unit is fixed inside as similar to typical electronic devices, and the reflective polarizer 110 is fixed to the inner surface of the transparent plate 180 disposed on the viewing side of the display unit. Accordingly, it is configured completely the same as the electronic device incorporating a normal display unit, and the reflective polarizer 110 is only fixed to the inner surface of the transparent plate 180. Thus, the embodiment in the invention can be realized. Therefore, it can be fabricated significantly simply at low costs.

[Ninth embodiment]

[0093] Next, a ninth embodiment in the invention will be described with reference to Figs. 9 and 10. In a display device 200 in this embodiment, a reflective polarizer 210, a polarizer 220 and a retarder 230 are sequentially disposed from the viewing side, as shown in Fig. 9. An electroluminescent panel (hereafter, it is simply called EL panel) 240, which is an electro-optical device equivalent to the display unit is disposed behind them. The reflective polarizer 210 and the polarizer 220 are completely the same as those in the other embodiments. In this embodiment, the retarder 230 is a quarter (1/4) wavelength plate.

[0094] In the EL panel 240, an electrode 242 configured of a transparent conductor such as ITO is formed on a substrate 241, and a light emitting element 244 is disposed on the electrode 242. Furthermore, a counter electrode 245 is formed on the light emitting element 244.

The counter electrode 245 is preferably configured as a reflecting electrode formed of aluminium or other metals. In the example shown in the drawing, an example is depicted in which the sash-like electrode 242 arranged side by side in plurals in a stripe shape and the sash-like counter electrode 245 similarly arranged side by side in the stripe shape are disposed orthogonal to each other (the electrode structure corresponding to the passive matrix drive system). However, the electrode structure is arbitrary, and it is acceptable to have a proper electrode structure required for display, such as the electrode structure corresponding to the active matrix drive system.

[0095] Fig. 10 depicts a more specific configuration of the EL panel 240. As shown in Fig. 10, the EL panel 240 of the embodiment can be configured to allow color display by forming light emitting elements 244R, 244G and 244B. These light emitting elements 244R, 244G and 244B are configured of a hole injection layer 244A, and a red light emitting layer 244r, a green light emitting layer 244g, or blue light emitting layer 244b.

[0096] As materials for the hole injection layer, phthalocyanine based compounds such as copper phthalocyanine, and aromatic amine based compounds are named. In addition, as materials for the light emitting layer, aromatic ring compounds such as distyrylbenzene derivatives (blue light emission), heterocyclic compounds such as organic fluorescent materials based on aluminium complex (Alq complex) of 8-hydroxyquinoline of metal complex, and compounds containing specific elements such as a mixed ligand complex, one kind of Alq complex derivatives that one of hydroxyquinolines is substituted to triphenyl silicanol (Si compound) for co-

Microsoft Ex. 1002 - Page 138 of 451

ordination (blue green light emission) are named. As other light emission materials other than blue color, nitrobenzothiazole azo compounds of red color, europium complexes of red color, distyrylpyrazine of yellow color, and aromatic dimethylidyne of green color are named.

[0097] In the embodiment, the light emitting element 244R is formed of the hole injection layer 244A, the red light emitting layer 244r and the blue light emitting layer 244b, and the blue light emitting layer 244b functions as a layer for securing flatness and an electron injection transport layer. In addition, the light emitting element 244G is formed of the hole injection layer 244A, the green light emitting layer 244g and the blue light emitting layer 244b, and the blue light emitting layer 244b functions as a layer for securing flatness and an electron injection transport layer. Furthermore, the light emitting element 244B is formed of the hole injection layer 244A and the blue light emitting layer 244b.

[0098] In the embodiment, a bank 243 is formed on the substrate 241 with insulating resin (such as acryl resin, epoxy resin and photosensitive polyimide), and each of the light emitting elements is formed in each pixel area partitioned by the bank 243. By adapting such a configuration, each of the light emitting elements can be formed by arranging liquid materials, liquefied by adding a solvent to each material, in each pixel area by liquid drop discharge and by drying and curing the arranged liquid materials.

[0099] In the embodiment, a predetermined voltage is applied between the electrode 242 and the counter electrode 245 of the EL panel 240 to allow the each light emitting elements to emit light. Accordingly, the light emitted from the each light emitting elements passes through the retarder 230, and then enters the polarizer 220. The polarized light component having the vibration plane in parallel to the transmitting polarization axis of the polarizer 220 is passed through, whereas the polarized light component having the vibration plane orthogonal to the transmitting polarization axis is absorbed. Moreover, the polarized light component having passed through the polarizer 220 enters the reflective polarizer 210, which is a first polarized light selecting unit. The reflective polarizer 210 is disposed so as to direct its transmitting polarization axis toward the same direction as that of the transmitting polarization axis of the polarizer 220. Therefore, the polarized light component having passed through the polarizer 220 travels through the reflective polarizer 210 as it is, and it is visibly recognized as the transmitted light "T" on the viewing side (the display mode).

[0100] On the other hand, when the outside light "O" enters the display device 200, the polarized light component having the vibration plane in parallel to the transmitting polarization axis of the reflective polarizer 210 passes through, but the polarized light component having the vibration plane orthogonal to the transmitting polarization axis is reflected. This reflected polarized light component "R" is unobservable when the display light emitted from the EL panel 240 passes through the reflective polarizer 210 in the display mode, and a predetermined display image formed of the display light of the EL panel 240 is visibly recognized. However, when it is configured that the light emission from the EL panel 240 is stopped not to emit light from the backside of the reflective polarizer 210, the visible mode recognition by the external light reflection of the reflective polarizer 210 becomes dominant to visibly recognize the display screen as a mirror (the mirror mode).

[0101] In addition, among the outside light "O," the polarized light component having the vibration plane in parallel to the transmitting polarization axis of the reflective polarizer 210 passes through the reflective polarizer 210 and the polarizer 220 having the transmitting polarization axis in the same direction, and enters the retarder 230. In the retarder 230, this polarized light component travels a quarter (1/4) phase to be right-handed circular polarized light, for example, and enters the EL panel 240 to be reflected by the reflecting electrode 245. This reflected light is turned to be left-handed circular polarized light. Thus, it again passes thorough the retarder 230 to be the polarized light component having the vibration plane orthogonal to the transmitting polarization axes of the reflective polarizer 210 and the polarizer 220. Therefore, the polarized light component is absorbed by the polarizer 220 as it is, and is not released to the viewing side.

[0102] Accordingly, since polarized light components of the outside light "O", which are not the polarized light components that are reflected on the surface of the reflective polarizer 210, will not return to the viewing side, the amount of the observed outside light can be reduced in the display mode. Thus, the deterioration of visibility can be reduced, and the light reflected other than in the surface of the reflective polarizer can be eliminated in the mirror mode. Therefore, a viewable mirror state with no blur can be realized.

[Tenth embodiment]

[0103] Next, an embodiment of the display device with a preferable backlight applied to the first to fourth embodiments will be described. The configuration of this embodiment can adopt any configurations of the first to ninth embodiments. Fig. 11 is a graph illustrating the luminance of the backlight against the emission angle distribution. In the embodiment, a backlight is desired that has high intensity luminance in the range of small emission angle centering the direction of the normal of the display screen (emission angle = 0), and has low luminance in the range of large emission angle, which is remote from the direction of the normal, in order to enhance the visibility of the display image. The range of small emission angle is an emission angle ranging from zero (0) to forty (40) degrees, and the range of large emission angle is the range exceeding an emission angle of forty (40) degrees. In the example shown in the

Microsoft Ex. 1002 - Page 139 of 451

drawing, a luminance of about 2000 [cd/m^2] is obtained in the light of a zero degree emission angle, whereas the luminance is dropped to 20 to 30 [cd/m^2] in the light of a fifty (50) degree emission angle.

[0104] As for the emission angle distribution of luminous light from the backlight (lighting unit) for the embodiment, it is configured to have much light amount in the range of small emission angle and to have less light amount in the range of large emission angle. Thus, the light amount of the transmitted light "T" entering the user's eye can be increased in the display mode. Therefore, a reduction in the visibility of the display screen due to the reflected light "R" can be further suppressed. In order to enhance the visibility of the display screen in the display mode and to suppress the light amount of the backlight to reduce power consumption, the light emission property of the backlight is preferably configured to have a luminance (light amount) of one fiftieth (1/50) or below of the luminance (light amount) in the direction of the normal for the range of large emission angle exceeding an emission angle of forty (40) degrees.

[0105] The emission angle distribution of luminous light of the backlight can be properly configured according to the shape of the light guide plate 162, the structure of the light reflection component or the light scattering component 163, and a filter or a scattering plate (diffuser) disposed separately.

[0106] The emission angle distribution of luminous light of the backlight is applicable to the emission angle distribution of display light in the EL panel 240 of the ninth embodiment as it is. More specifically, by configuring the emission angle distribution of display light of the EL panel 240 as that shown in Fig. 11, the display light can be configured to be visibly recognized efficiently with no increase in power consumption, and the visibility in the display mode can be enhanced regardless of the existence of the specular reflection light by the reflective polarizer.

[Eleventh embodiment]

[0107] Next, an electronic device 1000 of an eleventh embodiment in the invention will be described with reference to Figs. 12 and 13. This electronic device 1000 is provided with the display device 100 of the first embodiment. Fig. 12 is a schematic block diagram illustrating a display control system for the display device 100 to be disposed inside the electronic device 1000 in a form of combining with a function implementing unit. Fig. 13 is a schematic perspective view illustrating the exemplary configuration of the electronic device 1000 (a mobile phone).

[0108] The electronic device 1000 is provided with a display drive part 140X for driving the liquid crystal panel 140 disposed in the display device 100, a light control part 160X for controlling the backlight 160, and a control part 100X for controlling the display drive part 140X and the light control part 160X. By the way, the configuration shows the display control system in a form of combining with the function implementing unit, and does not depict an actual circuit configuration or the packaging structure of circuit devices. Therefore, it is acceptable that all the parts are formed in the display device 100, or formed outside the display device 100, that is, formed inside the electronic device 1000 instead of the display device 100. Furthermore, it is acceptable that a portion is formed inside the display device 100, and other portions are formed inside the electronic device 1000 instead of the display device 100.

[0109] The display drive part 140X is for feeding drive voltage to drive each of a plurality of pixel areas formed in the liquid crystal drive area of the liquid crystal panel 140. For example, it synchronously feeds scan signals and data signals corresponding to the scan signals to a common terminal (scan line terminal) and a segment terminal (data line terminal) of the liquid crystal panel 140 in the multiplex drive system or the active drive system. Display data such as image data is sent to the display drive part 140X from the main circuit of the electronic device 1000 via the control part 100X.

[0110] The light control part 160X controls power supply to the backlight 160. For example, it switches the backlight 160 between the lit state and the unlit state.

[0111] The control part 100X controls the display drive part 140X and the light control part 160X, and performs control instruction to each part and data sending. For example, when the display device 100 is to be set in the display mode, the display drive part 140X drives the liquid crystal panel 140 to display, and the light control part 160X allows the backlight 160 in the lit state simultaneously. When the display device 100 is to be set in the mirror state, the display drive part 140X controls the liquid crystal panel 140, and the liquid crystal display including the liquid crystal panel 140 is set in the full blocked state (shutter closed state). Alternatively, the light control part 160X turns off the backlight 160 to be in the unlit state. Preferably, the liquid crystal display is in a fully blocked state and the backlight 160 is in the unlit state in the mirror state.

[0112] As shown in Fig. 13, the electronic device 1000 of the embodiment can be configured as a mobile phone having a main body part 1001 and a display part 1002. In this case, it is configured that the display device 100 is disposed inside the display part 1002 to visibly recognize a display screen 1003 in the display part 1002. By configuring in this way, a predetermined display screen can be visibly recognized in the display screen 1003, or the mirror surface state can be visibly recognized depending on various manual operations and various situations. Accordingly, the electronic device 1000 such as the mobile phone can be used as a mirror.

[0113] In addition, when the electronic device 1000 is applied to a mobile phone 2000, the configuration is acceptable in which another display screen 2004, other than the main display screen (the same one as 1003)

Microsoft Ex. 1002 - Page 140 of 451

shown in Fig. 13, is disposed on the outer face of a display part 2002, folded over a main body part 2001 as shown in Fig. 14. And the display screen 2004 allows predetermined display to be visually recognized without opening the display part 2002 from the main body part 2001. In this case, the display device 100 is disposed in addition to the main display device depicted by dotted lines in Fig. 12, and thus the structure is formed in which the display screen 2004 can be visually recognized by the display device 100 other than the main display screen. In the mobile phone 2000 of the embodiment, display can be visually recognized in the folded state, and also it can be used as a mirror in the folded state.

[0114] In the embodiment, the electronic device 1000 and the mobile phone 2000 are preferably provided with an input part (control member) such as a control switch, a operation button, and a control dial for exclusively switching between the display mode (transmissive display mode) and the mirror mode, or for serving also as the input part for other functions. For example, it is configured that the control member for exclusive use or for dual purpose disposed on the main body part 1001 of the electronic device 1000 is manually operated and thus the operated state is sent to the control part 100X to switch between the display mode (transmissive display mode) and the mirror mode. Furthermore, the mobile phone 2000 is configured in which a control member, manually operable in the folded state shown in Fig. 14, is disposed and the control member is operated to send the operated state to the control part 100X for switching between the display mode (transmissive display mode) and the mirror mode. As for the dual purpose control member for forming the input part, for example, a data input key button and a power on/off button in various electronic devices such as a mobile phone and personal computer are named.

[0115] When the display device 200 having the EL panel 240 of the ninth embodiment is disposed inside the electronic device, the light control part is not needed. Instead, a control unit including functions of the control part and the display drive part can realize predetermined display states in the display mode and the mirror surface state in the mirror mode. In the mirror mode, the control unit stops light emission of the EL panel 240.

[0116] The display device and the electronic devices of the invention are not limited to the examples shown in the drawings, which can of course be modified variously within the scope of the invention. For example, in the embodiments, the case where the invention is applied to the liquid crystal device as one kind of electro-optical device, has been mainly described. However, the invention is not limited to this, but can be applied to various electro-optical devices such as the electroluminescent device as the ninth embodiment, particularly an organic electroluminescent device, an inorganic electroluminescent device, a plasma display device, an FED (field emission display) device, an LED (light emitting element) display device, an electrophoretic image display device, a small-sized TV using a low-profile CRT and a liquid-crystal shutter, and a device using a digital micromirror device (DMD).

[0117] As described above, according to the invention, display quality can be enhanced in the display device, which allows the display part to be switched between the display mode and the mirror mode. In addition, the display device can be formed to be low-profile and light-weight.

Claims

1. A display device comprising:

   a display unit adapted to allow a first polarized light to be emitted as display light; and a control unit adapted to control the display unit,

   wherein the display unit has a polarized light selecting unit on a viewing side thereof,

   the polarized light selecting unit transmits the first polarized light and reflects a second polarized light having a polarization axis crossing a polarization axis of the first polarized light, and

   the control unit is allowed to switch between a display mode, in which the first polarized light is emitted from the display unit as display light, and a mirror mode, in which the first polarized light is not emitted from the display unit.

2. The display device according to claim 1, wherein the control unit stops light emission from the display unit in the mirror mode.

3. A display device having a transmitting polarization axis varying unit, the display device including:

   a first polarized light selecting unit disposed on a viewing side of the transmitting polarization axis varying unit; and
   a second polarized light selecting unit disposed on a backside of the transmitting polarization axis varying unit,

   wherein the first polarized light selecting unit transmits a first polarized light and reflects a second polarized light having a polarization axis crossing a polarization axis of the first polarized light,

   the second polarized light selecting unit transmits a third polarized light and absorbs or reflects a fourth polarized light having a polarization axis crossing a polarization axis of the third polarized light, and

   the transmitting polarization axis varying unit is allowed to convert at least a part of the third polarized light to the first polarized light.

Microsoft Ex. 1002 - Page 141 of 451

4. The display device according to claim 3, wherein another transmitting polarization axis varying unit is not disposed on the viewing side of the first polarized light selecting unit.

5. The display device according to claim 3, wherein a third polarized light selecting unit adapted to transmit the first polarized light and to absorb the second polarized light is disposed between the first polarized light selecting unit and the transmitting polarization axis varying unit.

6. The display device according to claim 5 comprising:

a lighting device on the backside of the second polarized light selecting unit,

wherein the second polarized light selecting unit transmits the third polarized light and absorbs the fourth polarized light,

in which a fourth polarized light selecting unit is disposed between the second polarized light selecting unit and the lighting unit, and

the fourth polarized light selecting unit transmits the third polarized light and reflects the fourth polarized light.

7. The display device according to claim 3, wherein the second polarized light selecting unit transmits the third polarized light and reflects the fourth polarized light.

8. The display device according to claim 3, wherein a surface on the viewing side of the polarized light selecting unit is flat.

9. The display device according to claim 3 or 8, wherein a transparent protective film is formed on a surface on the viewing side of the first polarized light selecting unit.

10. The display device according to claim 3, wherein a lighting unit adapted to emit light to the viewing side is disposed on the backside of the second polarized light selecting unit.

11. The display device according to claim 10, wherein a light reflection component for reflecting outside light to the viewing side in a form of supporting display is not disposed between the first polarized light selecting unit and the lighting unit.

12. The display device according to claim 10 or 11, wherein the transmitting polarization axis varying unit is in a state not to emit the first polarized light when the lighting unit is not lit.

13. The display device according to claim 3, wherein a polarized light selecting area of the first polarized light selecting unit is extended beyond an area overlapping with a transmitting polarization axis varying area of the transmitting polarization axis varying unit.

14. The display device according to any one of claims 10 to 12, wherein a light amount emitted in a direction of the normal is greatest in an emission angle distribution of luminous light of the lighting unit.

15. The display device according to claim 14, wherein the luminous light of the lighting unit is distributed mainly at an emission angle ranging from zero (0) to forty (40) degrees.

16. The display device according to claim 14, wherein the luminous light of the lighting unit is one fiftieth (1/50) or below of a light amount in the direction of the normal for a range exceeding an emission angle of forty five (45) degrees.

17. The display device according to claim 3, wherein a color filter is disposed on the backside of the first polarized light selecting unit.

18. The display device according to claim 3, wherein a retarder is disposed between the first polarized light selecting unit and the transmitting polarization axis varying unit.

19. The display device according to claim 3, wherein a transparent member is disposed on the viewing side of the first polarized light selecting unit, and the first polarized light selecting unit is directly or indirectly closely contacted with the transparent member.

20. The display device according to claim 19, wherein the first polarized light selecting unit is bonded to the transparent member by a transparent substance.

21. The display device according to claim 19 or 20, wherein a surface of the transparent member on the first polarized light selecting unit is flat.

22. The display device according to claim 19 or 20, wherein a surface on the viewing side of the transparent member is a curved surface.

23. An electronic device comprising the display device according to clam 1 or 2.

24. An electronic device comprising:

the display device according to any one of claims 3 to 22; and

Microsoft Ex. 1002 - Page 142 of 451

a display drive unit adapted to drive the transmitting polarization axis varying unit.

25. An electronic device comprising:

the display device according to any one of claims 10 to 12, and 14 to 16;
a display drive unit adapted to drive the transmitting polarization axis varying unit; and
a lighting control unit adapted to control the lighting unit.

26. An electronic device comprising a display unit adapted to allow light emission,

wherein the display unit has a polarized light selecting unit adapted to transmit a first polarized light and to reflect a second polarized light having a polarization axis crossing a polarization axis of the first polarized light on a viewing side thereof, and

a transmissive display mode, in which the first polarized light is emitted from the polarized light selecting unit on the viewing side to allow the first polarized light to be observed on the viewing side, and a mirror mode, in which the first polarized light is not emitted from the polarized light selecting unit and the polarized light selecting unit is used as a mirror on the viewing side of display unit, are switchable.

27. The electronic device according to claim 26 further comprising an input part for allowing an operation of the display device or for allowing data input to display in the display device,

wherein the input part is operated to allow switching between the transmissive display mode and the mirror mode.

Microsoft Ex. 1002 - Page 143 of 451

FIG. 1

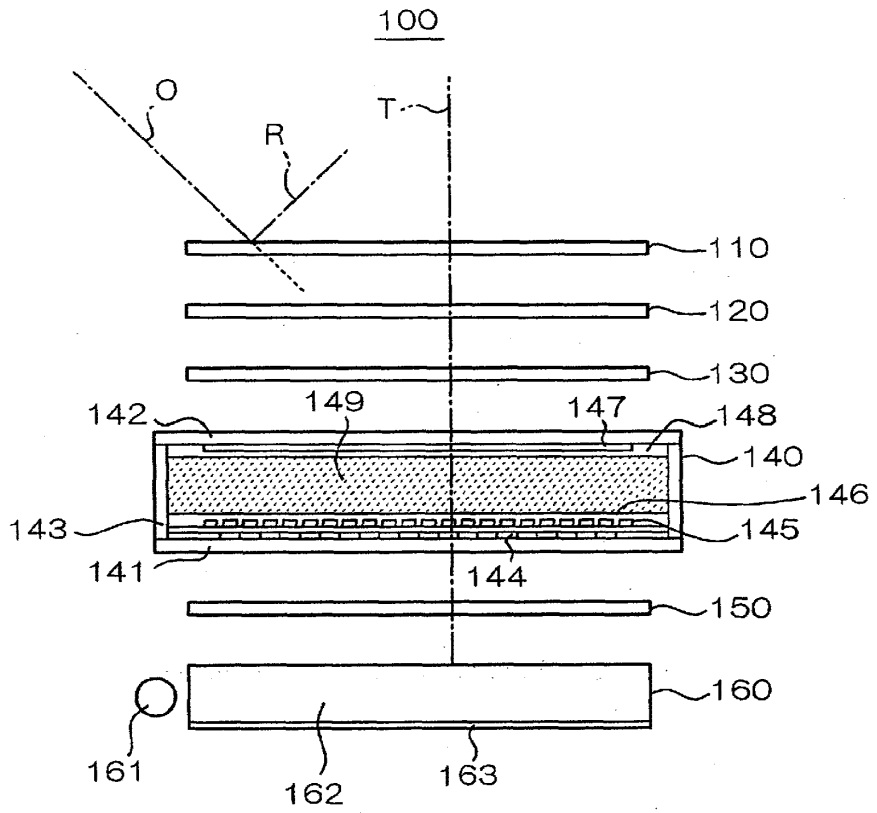
100
O
R
T
110
120
130
142
149
147
148
140
146
143
145
141
144
150
160
161
162
163

FIG. 2

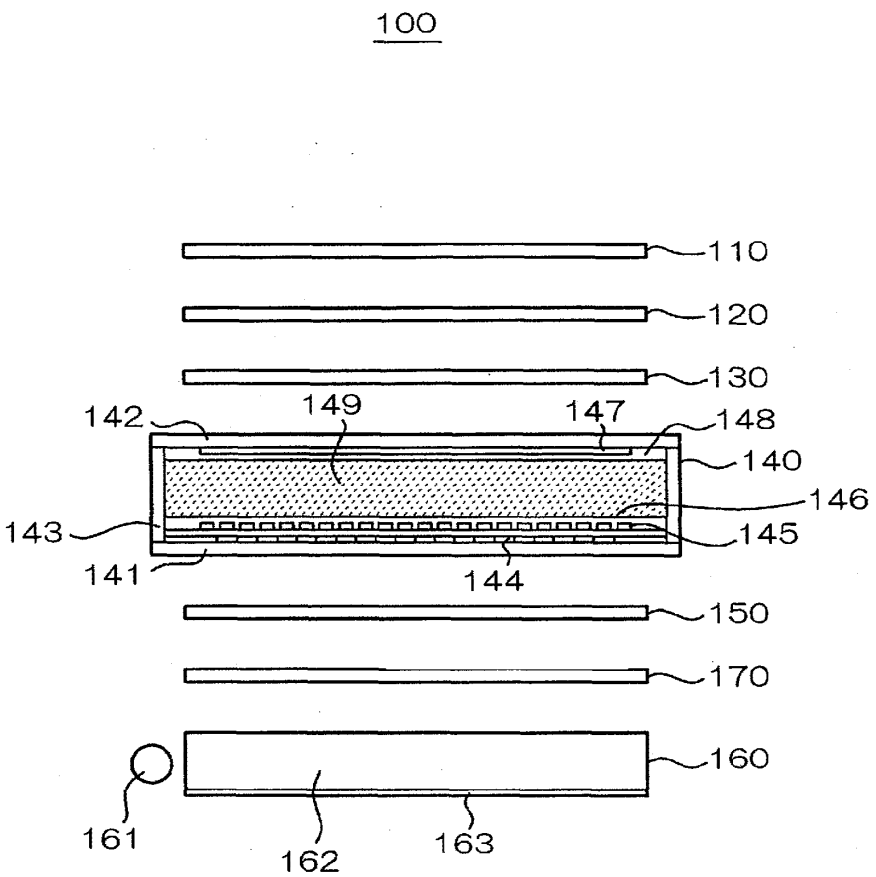
100
110
120
130
142
149
147
148
140
146
143
145
141
144
150
170
160
161
162
163

FIG. 3

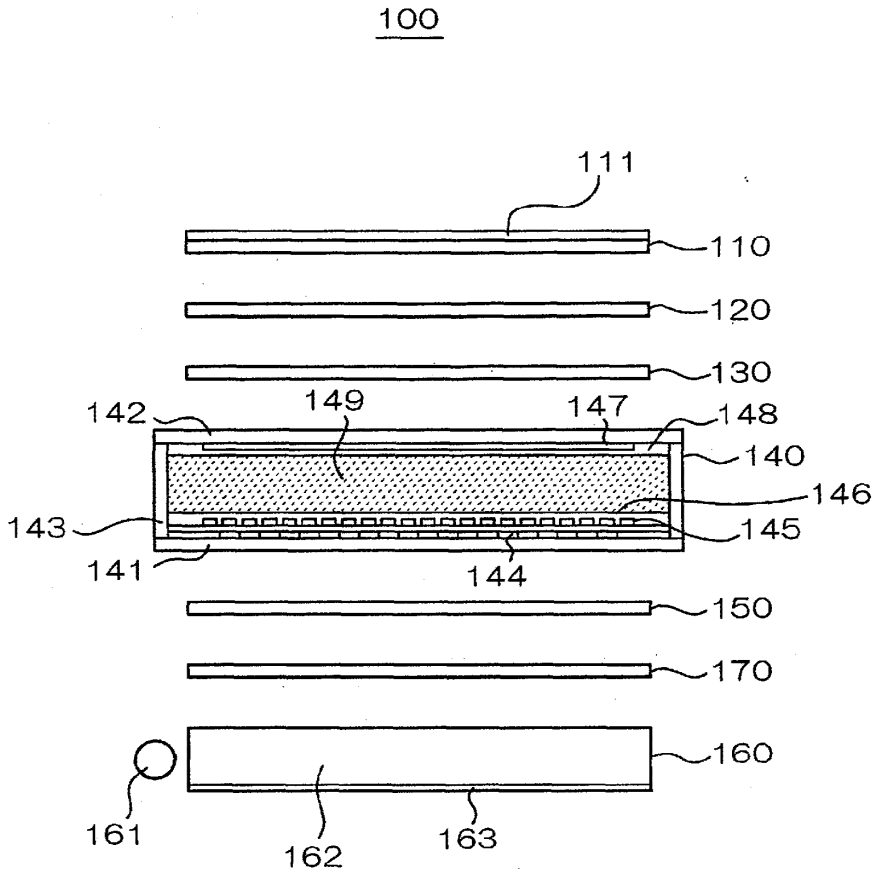
100
111
110
120
130
142
149
147
148
140
146
143
145
141
144
150
170
160
161
162
163

FIG. 4

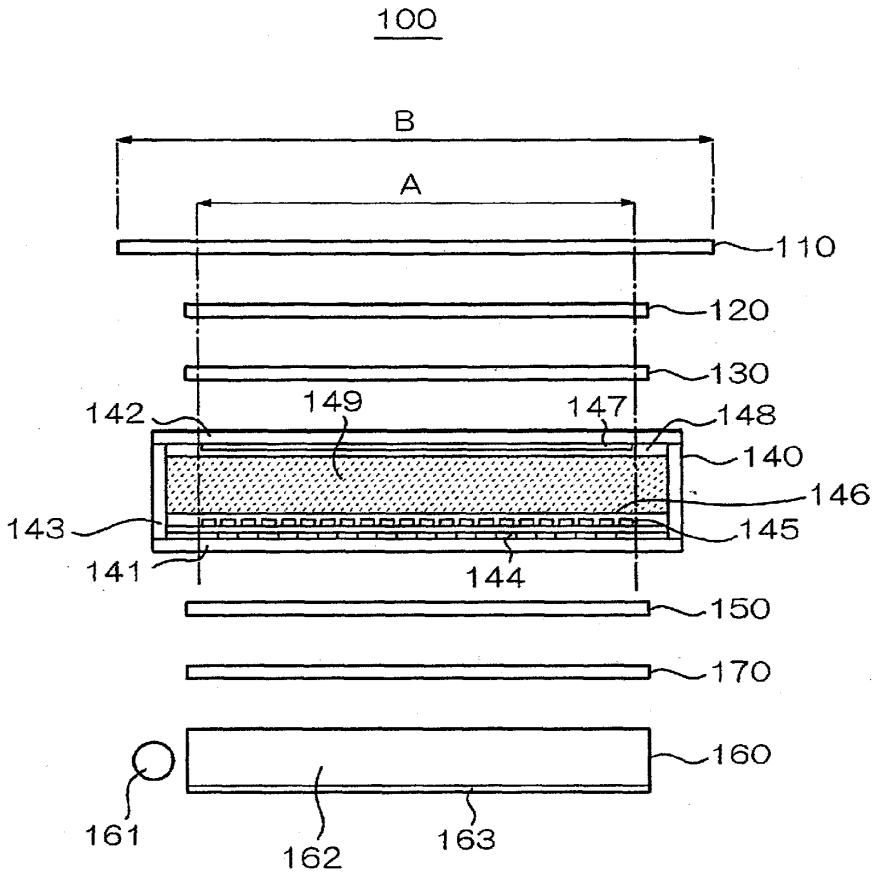
100
B
A
110
120
130
142
149
147
148
140
146
143
145
141
144
150
170
160
161
162
163

FIG. 5

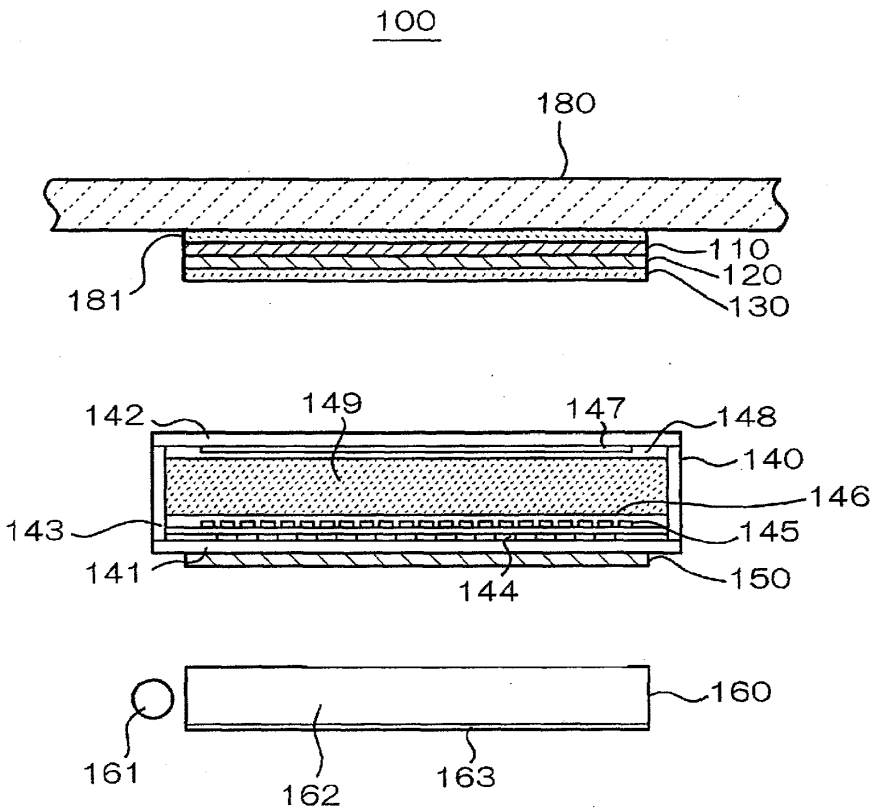
100
180
110
120
130
181
142
149
147
148
140
146
143
145
141
144
150
160
161
162
163

FIG. 6

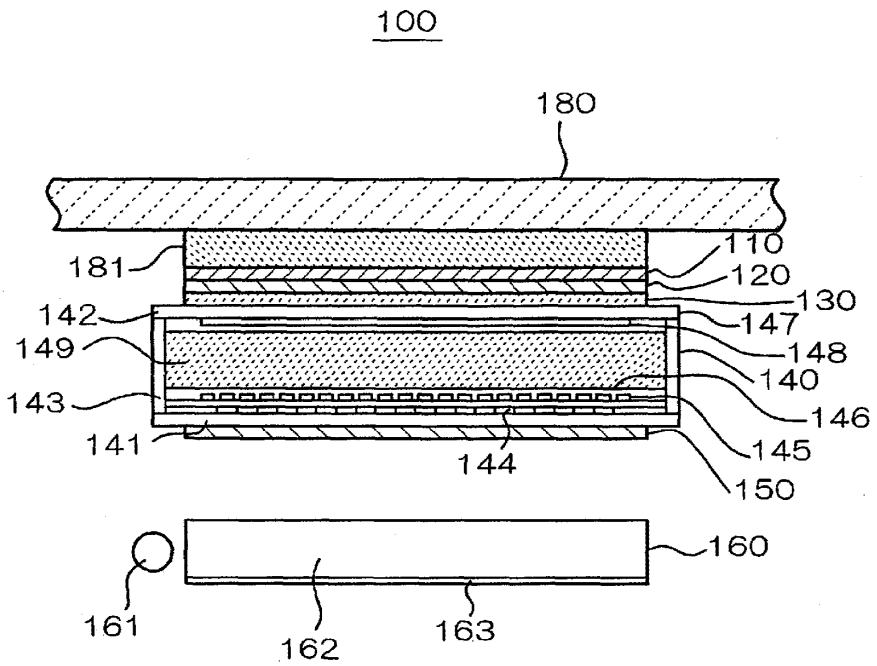
100
180
181
110
120
130
142
147
149
148
140
143
146
141
144
145
150
160
161
162
163

FIG. 7

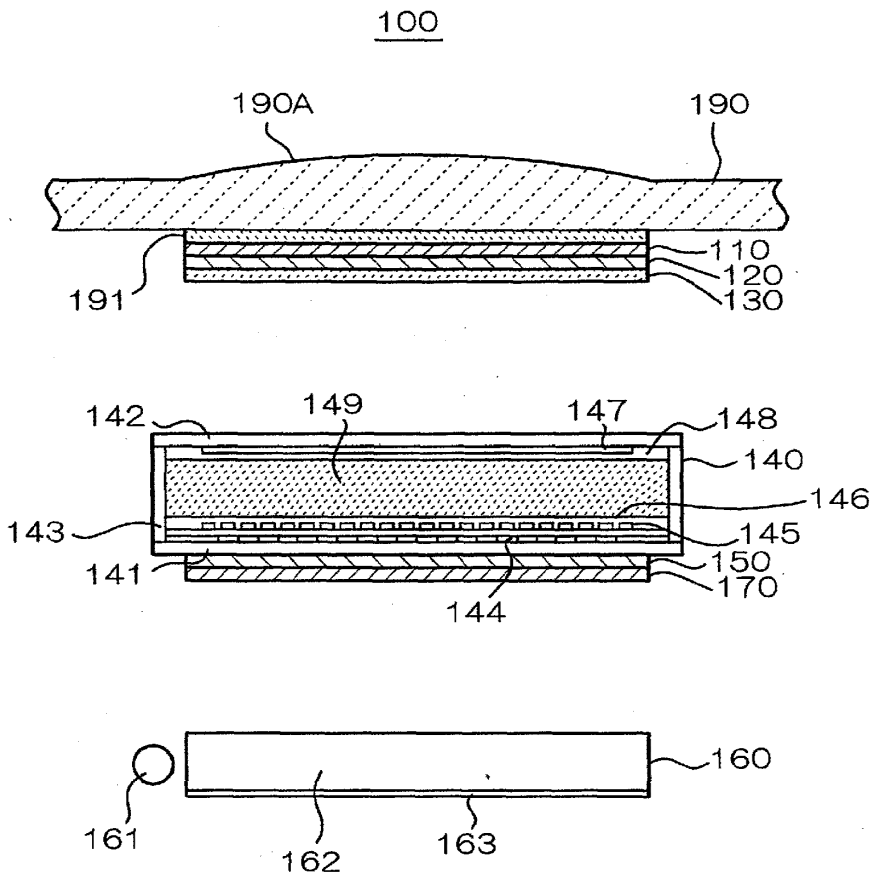

Microsoft Ex. 1002 - Page 150 of 451

FIG. 8

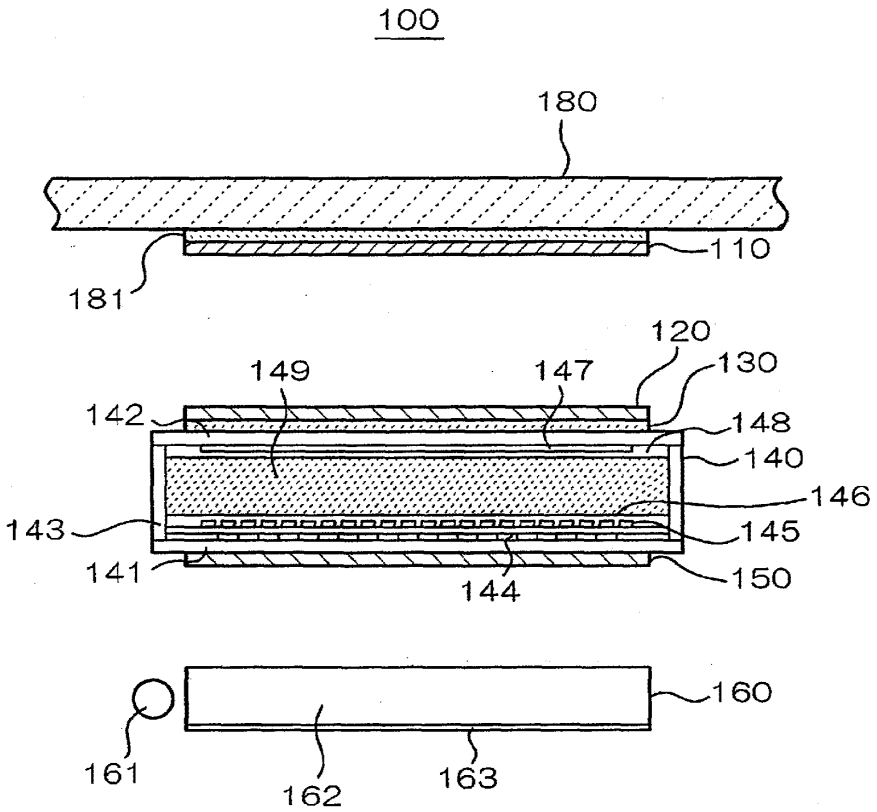

Microsoft Ex. 1002 - Page 151 of 451

FIG. 9

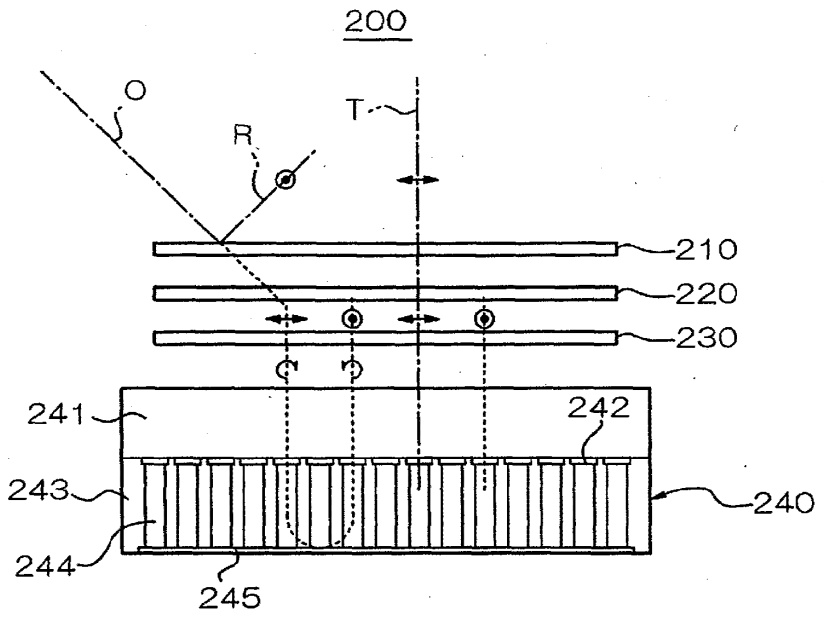

FIG. 10

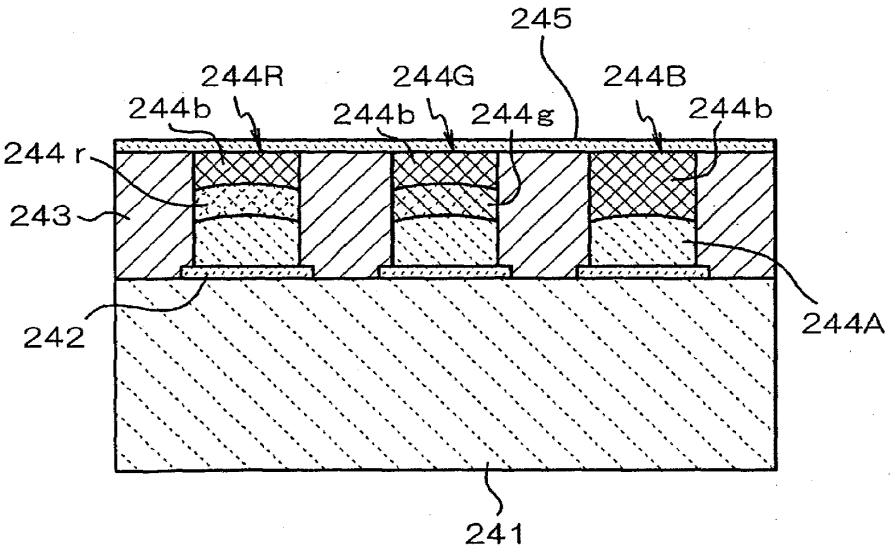

Microsoft Ex. 1002 - Page 152 of 451

FIG. 11

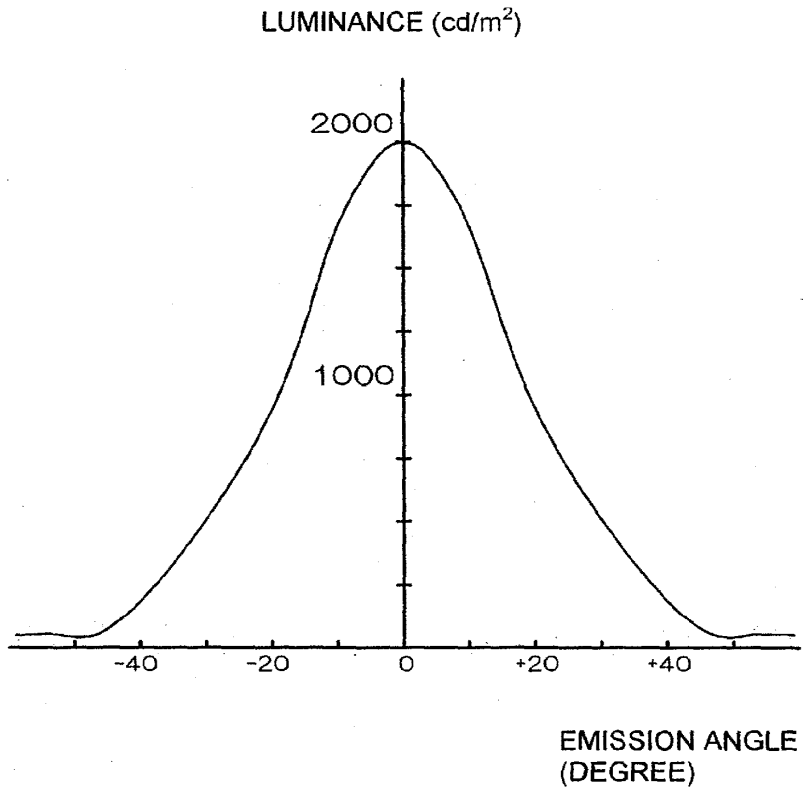

Microsoft Ex. 1002 - Page 153 of 451

FIG. 12

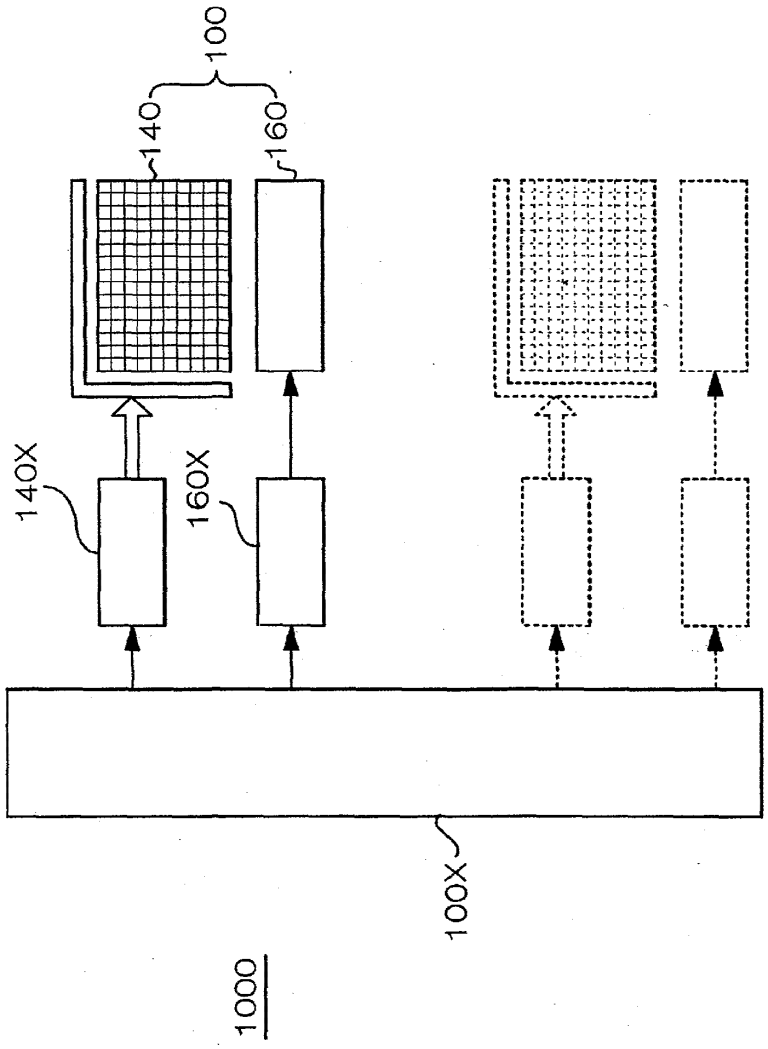

Microsoft Ex. 1002 - Page 154 of 451

FIG. 13

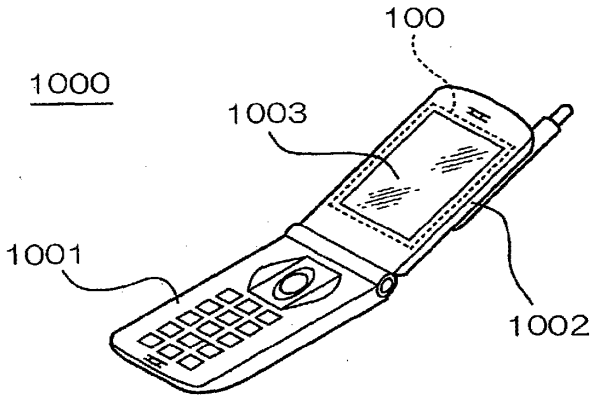

FIG. 14

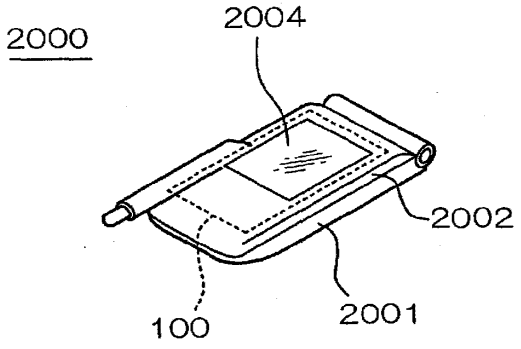

European Patent Office

EUROPEAN SEARCH REPORT

Application Number
EP 03 25 3912

DOCUMENTS CONSIDERED TO BE RELEVANT

Category	Citation of document with indication, where appropriate, of relevant passages	Relevant to claim	CLASSIFICATION OF THE APPLICATION (Int.Cl.7)
X	PATENT ABSTRACTS OF JAPAN vol. 2002, no. 03, 3 April 2002 (2002-04-03) -& JP 2001 318374 A (HITACHI LTD), 16 November 2001 (2001-11-16) * abstract * * paragraph [0008] - paragraph [0014] * * paragraph [0073] - paragraph [0134]; figures 7,8,10,11 * * paragraph [0278] - paragraph [0285]; figures 37,38 * ---	1-27	G02F1/1335 G02F1/13357 G09F13/12 H04M1/02 H04M1/21
X	EP 0 933 663 A (CITIZEN WATCH CO LTD) 4 August 1999 (1999-08-04) * paragraph [0052] - paragraph [0069]; figure 4 * * paragraph [0109] * -----	3,7-11, 14-21, 24,25	

TECHNICAL FIELDS SEARCHED (Int.Cl.7)

G02F
H04M

The present search report has been drawn up for all claims

Place of search	Date of completion of the search	Examiner
MUNICH	12 September 2003	Frank, W

CATEGORY OF CITED DOCUMENTS

X : particularly relevant if taken alone
Y : particularly relevant if combined with another document of the same category
A : technological background
O : non-written disclosure
P : intermediate document

T : theory or principle underlying the invention
E : earlier patent document, but published on, or after the filing date
D : document cited in the application
L : document cited for other reasons

& : member of the same patent family, corresponding document

EPO FORM 1503 03.02 (P04C01)

Microsoft Ex. 1002 - Page 156 of 451

ANNEX TO THE EUROPEAN SEARCH REPORT ON EUROPEAN PATENT APPLICATION NO. EP 03 25 3912

This annex lists the patent family members relating to the patent documents cited in the above-mentioned European search report.
The members are as contained in the European Patent Office EDP file on
The European Patent Office is in no way liable for these particulars which are merely given for the purpose of information.

12-09-2003

Patent document cited in search report	Publication date	Patent family member(s)	Publication date
JP 2001318374 A	16-11-2001	JP 3419766 B2	23-06-2003
		WO 02069031 A1	06-09-2002
		JP 2003202565 A	18-07-2003
EP 0933663 A	04-08-1999	AU 8244598 A	10-02-1999
		BR 9806032 A	13-10-1999
		DE 69811201 D1	13-03-2003
		DE 69811201 T2	14-08-2003
		EP 0933663 A1	04-08-1999
		AU 8244498 A	10-02-1999
		BR 9806033 A	13-10-1999
		CN 1234878 T	10-11-1999
		CN 1115612 B	23-07-2003
		EP 0927917 A1	07-07-1999
		WO 9904322 A1	28-01-1999
		WO 9904315 A1	28-01-1999
		JP 3317504 B2	26-08-2002
		JP 3154498 B2	09-04-2001
		JP 2001201764 A	27-07-2001
		JP 2002328187 A	15-11-2002
		US 2002109808 A1	15-08-2002
		US 6580479 B1	17-06-2003

EPO FORM P0459

For more details about this annex : see Official Journal of the European Patent Office, No. 12/82

Microsoft Ex. 1002 - Page 157 of 451

PCT WELTORGANISATION FÜR GEISTIGES EIGENTUM
Internationales Büro
INTERNATIONALE ANMELDUNG VERÖFFENTLICHT NACH DEM VERTRAG ÜBER DIE INTERNATIONALE ZUSAMMENARBEIT AUF DEM GEBIET DES PATENTWESENS (PCT)

(51) **Internationale Patentklassifikation** 7 :
A45D 44/00, G09B 19/00

A1

(11) **Internationale Veröffentlichungsnummer:** **WO 00/22955**

(43) **Internationales Veröffentlichungsdatum:** 27. April 2000 (27.04.00)

(21) **Internationales Aktenzeichen:** PCT/EP99/07638

(22) **Internationales Anmeldedatum:** 12. Oktober 1999 (12.10.99)

(30) **Prioritätsdaten:**

198 48 589.1	21. Oktober 1998 (21.10.98)	DE
198 52 876.0	16. November 1998 (16.11.98)	DE
199 01 719.0	18. Januar 1999 (18.01.99)	DE
199 04 284.5	3. Februar 1999 (03.02.99)	DE

(71)(72) **Anmelder und Erfinder:** FISCHER, Eric [DE/DE]; St.–Rita–Weg 15, D–82041 Oberhaching (DE).

(74) **Anwälte:** BOHNENBERGER, Johannes; Meissner, Bolte & Partner, Postfach 86 06 24, D–81633 München (DE) usw.

(81) **Bestimmungsstaaten:** AU, JP, US, europäisches Patent (AT, BE, CH, CY, DE, DK, ES, FI, FR, GB, GR, IE, IT, LU, MC, NL, PT, SE).

Veröffentlicht
Mit internationalem Recherchenbericht.
Vor Ablauf der für Änderungen der Ansprüche zugelassenen Frist; Veröffentlichung wird wiederholt falls Änderungen eintreffen.

(54) **Title:** SYSTEM FOR SUPPORTING THE SELECTION OF ARTICLES WITH THE AID OF A VIDEO CAMERA

(54) **Bezeichnung:** SYSTEM ZUM UNTERSTÜTZEN DER AUSWAHL VON ARTIKELN MIT HILFE EINER VIDEOKAMERA

(57) **Abstract**

Disclosed is a sales system comprising a mirror, in which a customer can see himself with a sales object, e.g. a pair of glasses, a garment, a piece of jewelry or the like. Said system includes a video camera that is mounted in relation to the mirror in such a way that the customer can be picked up by the video camera when the customer is looking at himself in the mirror, a storage device that may be actuated by the customer or a third person for storing and playing back images recorded by the video camera and an image playback device for playing back the recorded images to be viewed by the customers.

(57) **Zusammenfassung**

Es wird ein Verkaufssystem mit einem Spiegel beschrieben, in welchem ein Kunde sich mit einem Verkaufsobjekt, z.B. einer Brille, einem Kleidungsstück, Schmuck oder dergleichen, betrachten kann, und das aufweist: eine Videokamera, welche relativ zum Spiegel so angeordnet ist, daß der Kunde, wenn er sich im Spiegel betrachtet, von der Videokamera aufnehmbar ist; eine Speichereinrichtung, die vom Kunden oder einer dritten Person zum Speichern und Wiedergeben von Bildern, die von der Videokamera aufgenommen wurden, betätigbar ist, und eine Bildwiedergabeeinrichtung zum Wiedergeben der aufgenommenen Bilder zur Betrachtung durch den Kunden.

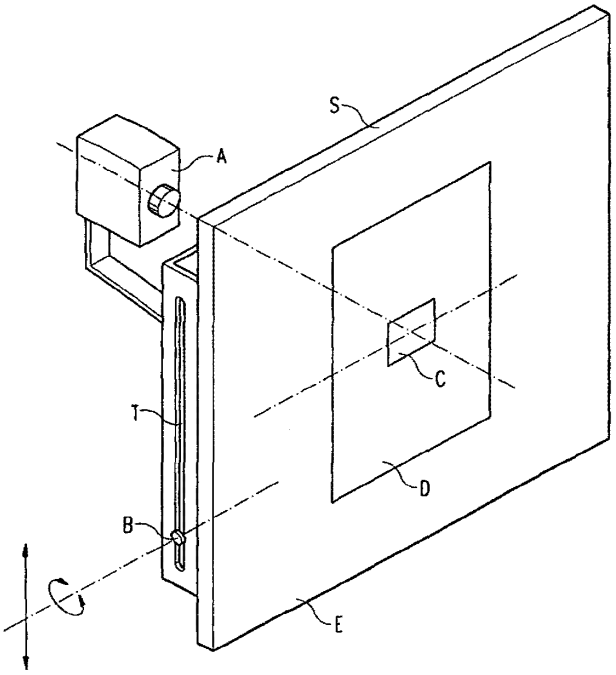

LEDIGLICH ZUR INFORMATION

Codes zur Identifizierung von PCT-Vertragsstaaten auf den Kopfbögen der Schriften, die internationale Anmeldungen gemäss dem PCT veröffentlichen.

AL	Albanien	**ES**	Spanien	**LS**	Lesotho	**SI**	Slowenien
AM	Armenien	**FI**	Finnland	**LT**	Litauen	**SK**	Slowakei
AT	Österreich	**FR**	Frankreich	**LU**	Luxemburg	**SN**	Senegal
AU	Australien	**GA**	Gabun	**LV**	Lettland	**SZ**	Swasiland
AZ	Aserbaidschan	**GB**	Vereinigtes Königreich	**MC**	Monaco	**TD**	Tschad
BA	Bosnien-Herzegowina	**GE**	Georgien	**MD**	Republik Moldau	**TG**	Togo
BB	Barbados	**GH**	Ghana	**MG**	Madagaskar	**TJ**	Tadschikistan
BE	Belgien	**GN**	Guinea	**MK**	Die ehemalige jugoslawische Republik Mazedonien	**TM**	Turkmenistan
BF	Burkina Faso	**GR**	Griechenland			**TR**	Türkei
BG	Bulgarien	**HU**	Ungarn	**ML**	Mali	**TT**	Trinidad und Tobago
BJ	Benin	**IE**	Irland	**MN**	Mongolei	**UA**	Ukraine
BR	Brasilien	**IL**	Israel	**MR**	Mauretanien	**UG**	Uganda
BY	Belarus	**IS**	Island	**MW**	Malawi	**US**	Vereinigte Staaten von Amerika
CA	Kanada	**IT**	Italien	**MX**	Mexiko		
CF	Zentralafrikanische Republik	**JP**	Japan	**NE**	Niger	**UZ**	Usbekistan
CG	Kongo	**KE**	Kenia	**NL**	Niederlande	**VN**	Vietnam
CH	Schweiz	**KG**	Kirgisistan	**NO**	Norwegen	**YU**	Jugoslawien
CI	Côte d'Ivoire	**KP**	Demokratische Volksrepublik Korea	**NZ**	Neuseeland	**ZW**	Zimbabwe
CM	Kamerun			**PL**	Polen		
CN	China	**KR**	Republik Korea	**PT**	Portugal		
CU	Kuba	**KZ**	Kasachstan	**RO**	Rumänien		
CZ	Tschechische Republik	**LC**	St. Lucia	**RU**	Russische Föderation		
DE	Deutschland	**LI**	Liechtenstein	**SD**	Sudan		
DK	Dänemark	**LK**	Sri Lanka	**SE**	Schweden		
EE	Estland	**LR**	Liberia	**SG**	Singapur		

SYSTEM ZUM UNTERSTÜTZEN DER AUSWAHL VON ARTIKELN MIT HILFE EINER VIDEOKAMERA

Beschreibung

Die Erfindung betrifft ein Verkaufssystem mit einem Spiegel, in dem sich ein Kunde mit einem Verkaufsobjekt betrachten kann, wobei er gleichzeitig durch eine Videokamera aufgenommen wird.

Es ist bekannt, im Verkauf Videogeräte einzusetzen, mit denen der Kunde mit verschiedenen Gegenständen, die er möglicherweise kaufen möchte, abgelichtet wird. Solche Videogeräte können im Self-Service, oder auch durch Verkaufspersonal bedient werden. Der Kunde kann sich das von der Videokamera aufgenommene Bild in einem Monitor betrachten. Da der Kunde sein Bild im Monitor betrachtet, wird er auch, während er verschiedene Verkaufsobjekte anprobiert, seine Aufmerksamkeit dem Monitor und dem darin gezeigten Bild zuwenden. Durch die Konzentration auf den Monitor besteht aber die große Gefahr, daß das Auftreten des Kundens und damit sein Erscheinungsbild zusammen mit dem anzuprobierenden Verkaufsobjekt nicht mehr natürlich wirkt und der unerwünschte sogenannte „Off-Set"-Blickwinkel entsteht.

Aufgabenstellung der vorliegenden Erfindung ist es, diese bisher im Zusammenhang mit der Verwendung von Videokameras beim Verkauf verbundenen Nachteile zu vermeiden, und insbesondere den sogenannten „Off-Set"-Effekt, und vom Kunden während der Anprobe ein „vertrautes" Bild von sich selbst zu machen.

Diese Aufgabenstellung wird mit dem Gegenstand der vorliegenden Erfindung gelöst.

Gegenstand der Erfindung ist ein Verkaufssystem nach Patentanspruch 1.

Zweckmäßige Ausgestaltungen dieses Systems sind Gegenstand der Ansprüche 2 bis 17.

Weiterer Gegenstand ist die Verwendung des erfindungsgemäßen Verkaufssystems zur Überwachung von Räumen, Raumabschnitten oder dergleichen Gebäudeteilen nach Anspruch 18.

Ein weiterer Gegenstand der Erfindung ist auch ein Spiegel, der sich zur Verwendung in einem erfindungsgemäßen Verkaufssystem eignet, nach Anspruch 19. Zweckmäßige Ausgestaltungen davon sind Gegenstand der Ansprüche 20 bis 22.

Erfindungsgemäß wird ein Verkaufssystem mit einem Spiegel bereitgestellt, in welchem ein Kunde sich mit einem Verkaufsobjekt, z.B. einer Brille, einem Kleidungsstück, Schmuck oder dergleichen, betrachten kann, und das gekennzeichnet ist durch eine Videokamera, welche relativ zum Spiegel so angeordnet ist, daß der Kunde, wenn er sich im Spiegel betrachtet, damit aufgenommen werden kann, eine Speichereinrichtung, die vom Kunden oder einer dritten Person zum Speichern und/oder Wiedergeben von Bildern, die von der Videokamera aufgenommen wurden, betätigbar ist, und eine Bildwiedergabeeinrichtung zum Wiedergeben der aufgenommenen Bilder zur Betrachtung durch den Kunden.

Durch dieses erfindungsgemäße Verkaufssystem ist es möglich, ein unnatürliches Verhalten (z.B. eine unnatürliche Blickrichtung, Augenstellung und Körperhaltung) und eine

unnatürliche Abbildung durch die Videokamera, und insbesondere den „Off-Set"-Effekt zu vermeiden.

Beim erfindungsgemäßen Verkaufssystem wird, wenn der Kunde sich mit einem Verkaufsobjekt im Spiegel betrachtet, das Bild durch die vorzugsweise hinter dem Spiegel und für den Kunden nicht sichtbare Videokamera festgehalten, und als „Live-Spiegelbild" in der Bildwiedergabeeinrichtung gezeigt. Die Aufmerksamkeit des Kunden richtet sich also, so wie bei einer normalen Anprobe vor einem Spiegel, auf sein Spiegelbild im Spiegel, und nicht auf den Monitor, wodurch das normale und natürliche Verhalten während einer solchen traditionellen Anprobe vor einem Spiegel erhalten bleibt, und der Kunde seine Aufmerksamkeit nicht dem Monitor zuwendet, sondern seinem „Live-Spiegelbild". Durch die erfindungsgemäß vorgesehene, mit der Videokamera operativ verbundene Speichereinrichtung und die Bildwiedergabeeinrichtung kann der Kunde dann in Ruhe nach der „natürlichen Anprobe vor dem Spiegel" die gespeicherten Bilder oder Bildsequenzen beliebig abrufen und miteinander vergleichen.

Als Spiegel lassen sich im allgemeinen solche verwenden, wie sie für bestimmte Verkaufsobjekte, z.B. Kleidungsstücke, Schmuck, Brillen usw., üblicherweise verwendet werden.

Vorzugsweise ist der Spiegel zusammen mit der Videokamera derart einstellbar, daß der Kunde unabhängig von seiner Körpergröße, einem zu betrachtenden Körperabschnitt und/oder der Position (z.B. sitzend oder stehend) den Spiegel nach seinem Blickfeld einstellen kann; dadurch wird wieder das natürliche Verhalten, wie es der Kunde vor für bestimmte Verkaufsobjekte angepaßten Spiegeln gewohnt ist, erhalten.

Besonders zweckmäßig ist es, wenn die erfindungsgemäß verwendeten Spiegel mit einem semitransparenten Bereich

ausgestattet sind. Die Videokamera befindet sich dann hinter dem Spiegel und ist mit dem Spiegel zusammen beweglich so montiert, daß sie durch den semitransparenten Bereich hindurch Bilder vom Kunden aufnehmen und der Kunde sich auch im semitransparenten Bereich des Bilds betrachten kann. Der Spiegel kann dabei auch so ausgestaltet sein, daß die Grenzen des semitransparenten Bereichs des Spiegels vom Kunden nicht oder kaum bemerkt werden. Der Kunde nimmt die hinter dem Spiegel befindliche Videokamera gar nicht wahr, und führt die Anproben wie auf bisher gewohnte Weise durch, wodurch das natürliche Verhalten erhalten bleibt, und die Gefahr eines unnatürlichen Betrachtungswinkels und insbesondere die des „Off-Set"-Effekts weitgehend ausgeschaltet ist.

Gegenstand der Erfindung ist auch ein Spiegel, der zur Verwendung in einem erfindungsgemäßen Verkaufssystem geeignet ist, dadurch gekennzeichnet, daß der Spiegel einen für den Betrachter erkennbaren Bereich aufweist, auf der der Betrachter seine Aufmerksamkeit lenkt und der auf diese Weise zur Zone des Augenkontaktes des Betrachters wird.

Vorzugsweise liegt dieser Bereich eines optimalen Augenkontaktes in einem zentralen Bereich des Spiegels. Dieser Bereich kann zweckmäßigerweise durch Einfärben, Tönen oder änliche Markierungseinrichtungen markiert werden, um für den Betrachter leicht erkennbar zu sein. Dadurch wird der Betrachter dann auch veranlaßt werden, seine Aufmerksamkeit und damit die Blickrichtung diesem Bereich zuzuwenden, wodurch der Bereich zu einer Zone eines optimalen Augenkontakts vom Betrachter wird, was wieder zu einer natürlichen Erscheinungsform des Gesamtbildes beitragen kann.

In einer erfindungsgemäßen Ausführungsform, insbesondere für den Fall, daß sich im erfindungsgemäßen Verkaufssystem die

Kamera hinter dem Spiegel befindet ist, dieser Bereich semitransparent ausgestaltet.

Als Materialien für den Spiegel und die semitransparenten Bereiche des Spiegels können bekannte und übliche Materialien für Spiegel und semitransparente Spiegel verwendet werden. Als semitransparente Spiegelmaterialien können z.B. solche mit 50 % Durchlässigkeit und 50 % Reflektion des Lichtes verwendet werden; die Verringerung der Lichtdurchlässigkeit um 50 % kann z.B. durch Tönen des Glases, üblicherweise unter Verwendung eines Grau- oder Brauntones, bewirkt werden. Semitransparente Spiegel lassen z.B. 30 % des auffallenden Lichtes hindurch, und reflektieren 70 % davon, obwohl auch andere Bereiche und deren Kombinationen möglich sind.

Insbesondere abhängig von der Art der Verkaufsobjekte kann es zweckmäßig sein, den gesamten Spiegel oder vorzugsweise bestimmte Teile davon, wie z.B. die Außenränder, mit Grautönen oder Farbtönen, zu versehen. Der semitransparente Bereich des Spiegels ist vorzugsweise in einem zentralen Bereich des Spiegels ausgebildet, und insbesondere in einer Zone eines optimalen Augenkontaktes.

Vorzugsweise wird der semitransparente Bereich des Spiegels von seiner Fläche her minimiert und zwar derart, daß der von der Kamera erfaßbare Bildausschnitt von den Rändern des semitransparenten Bereiches „umrahmt" wird, also keine Verkleinerung erfährt. Bei einem vom Durchmesser her kleinen Objektiv, das noch dazu nahe am Spiegel montiert ist, kann darum der semitransparente Bereich sehr klein sein. Dies hat zur Folge, daß selbst bei starkem Umgebungslicht, wie es beispielsweise im Freien auf der Straße vorherrscht, das Spiegelbild optimal ist und der transparente Bereich praktisch nicht stört. Dann nämlich, wenn ein sehr großer transparenter Spiegel bei sehr heller Umgebung benutzt wird,

verblaßt das Spiegelbild, so daß für den Kunden eine sehr unnatürliche Situation entsteht.

Unter den vorgenannten „Außenrändern" des Spiegels ist der Bereich des Spiegels zu verstehen, in welchem sich der Kunde zwar sehen kann, der aber nicht von der Videokamera aufgenommen wird. Es wird somit in dem Spiegel ein „mittelgroßes" Feld durch die Außenränder definiert, das gerade so groß ist wie der Aufnahmebereich der Kamera, der durch die Brennweite ihres Objektivs usw. bestimmt ist. Der Kunde sieht dadurch, ob der ihn interessierende Bildausschnitt auch tatsächlich aufgenommen wird. Darüberhinaus wird durch die Abgrenzung, die natürlich auch als einfacher Rahmen ausgebildet sein kann, der Kunde unwillkürlich dazu gebracht, sich so zu positionieren, daß die ihn interessierenden Bereiche gut als Spiegelbild sichtbar und damit auch gleichzeitig exakt von der Kamera aufnehmbar sind. Andererseits wird dadurch, daß das Gesamt-Spiegelbild erheblich größer ist als der aufgenommene Bildausschnitt, sichergestellt, daß der Kunde trotz Konzentration auf die ihm wichtigen Bildbereiche einen natürlichen Eindruck von seiner Gesamterscheinung erhält und nicht versucht ist, weiter zurückzutreten, um eben diese Gesamterscheinung zu sehen. Dies ist insbesondere deshalb so wichtig, weil die hier gezeigte Erfindung besonders für den Self-Service-Bereich Verwendung finden kann, also kein mit dem Umgang der Vorrichtung erfahrener Verkäufer anwesend ist bzw. sein muß.

Die Speichereinrichtung, die vom Kunden oder einer dritten Person zur Speicherung und/oder zur Wiedergabe von Bildern, die von der Videokamera aufgenommen wurden, bedient werden kann, ist vorzugsweise so ausgestaltet, daß das Bild (Standbild) und/oder Bildsequenzen beliebig zeitlich versetzt und/oder gleichzeitig („Bild im Bild") abgerufen und

miteinander verglichen werden können. Auf diese Weise ist es möglich, daß mehrere während einer „natürlichen Anprobe" vor dem Spiegel getestete Verkaufsobjekte in Ruhe miteinander verglichen werden können; der Kunde kann also die einzelnen Anproben, die er in gewohnter Weise im Spiegel zeitlich versetzt durchgeführt hat, gleichzeitig betrachten und damit direkt und gleichzeitig vergleichen.

Mit der Speichereinrichtung ist operativ eine Bildwiedergabeeinrichtung zum Wiedergeben der aufgenommenen Bilder zur Betrachtung durch den Kunden verbunden. Die Bildwiedergabeeinrichtung zum Wiedergeben der aufgenommenen Bilder und zur Betrachtung durch den Kunden ist z.B. als Monitor ausgestaltet. Auf dem Monitor werden die Bilder (einzelne Standbilder (Stillstandprojektion) und/oder Bildsequenzen ausgewählter Länge) gezeigt und können auf diese Weise direkt verglichen werden; das Abrufen von in der Speichereinrichtung gespeicherten Bildern kann z.B. durch einen Monitor, der als Berührungsschirm ausgestaltet ist, oder durch Bedienungstasten erfolgen. Auf diese Weise ist es möglich, Bilder mehrmals zu betrachten, dann z.B. eine engere Auswahl zu treffen, und dann nach einem nochmaligen Vergleich innerhalb der engeren Auswahl eine endgültige Auswahl zu treffen.

In einer weiteren Ausführungsform ist die Möglichkeit vorgegeben, die Wiedergabe der aufgenommenen Bilder als (seitenverkehrtes) Spiegelbild oder als echtes Abbild (entsprechend einem Foto) zu bewirken. Im ersten Fall sieht sich der Kunde auf dem Monitor (bzw. auf einem ausgedruckten Bild) so, wie er sich normalerweise im Spiegel sieht, im anderen Fall sieht sich der Kunde so, wie ihn eine andere Person wahrnimmt oder wie er auf einer Fotografie erscheint. Diese Seitenumkehr kann beispielsweise durch ein an sich bekanntes Vertauschen der einzelnen Bildelemente entlang

einer vertikalen Symmetrieachse geschehen. Diese Möglichkeit ist besonders für solche Kunden wichtig, die sich nicht gerne in Film- oder Fotoaufnahme sehen sondern lieber nach Art des ihnen geläufigen Spiegelbilds betrachten.

In einer Ausführungsform kann die Bildwiedergabeeinrichtung auch als Druckeinrichtung zum Ausdrucken einzelner Standbilder ausgestaltet sein, die mit der Speichereinrichtung operativ verbunden ist. In einer bevorzugten Ausführungsform besteht die Bildwiedergabeeinrichtung aus einem Monitor und einer Druckeinrichtung; dadurch ist es möglich, zunächst Bilder oder Bildsequenzen im Monitor zu betrachten und zu vergleichen, und dann nach einer gegebenenfalls engeren Auswahl durch die Druckeinrichtung Bilder auszudrucken, die dann z.B. nach Hause mitgenommen werden können, um dort in Ruhe eine endgültige Entscheidung zu treffen.

Bildwiedergabeeinrichtungen, z.B. Monitor und/oder Druckeinrichtung, sind vorzugsweise so ausgestaltet, daß sie auch Ausschnitte, Vergrößerungen und/oder Verkleinerungen, oder Bilder mit veränderter Helligkeit, bereitstellen können, sowie seitenverkehrte Bilder.

Für den Fall, daß sich die Videokamera hinter dem Spiegel befindet, ist sie in einem die Kamera umschließenden Raum hinter dem Spiegel montiert, der lichtdicht abgeschlossen werden kann. Zweckmäßigerweise befindet sie sich in einem hinter dem Spiegel angebrachten Gehäuse, das lichtdicht abgeschlossen werden kann und zusammen mit der Kamera eine Einheit bildet, die als solche bewegt und entfernt werden kann.

Das erfindungsgemäße Verkaufssystem weist vorzugsweise auch eine Beleuchtungseinrichtung auf, die zum Beleuchten der von

der Videokamera aufzunehmenden Situation, d.h. also des Kundens in verschiedenen Anprobesituationen, dient, und die vorzugsweise steuerbar und/oder einstellbar ausgebildet und angebracht ist.

Der Kunde soll sich zweckmäßigerweise, insbesondere auch abhängig von der Art der Verkaufsobjekte, unter einer kontrollier- und steuerbaren Beleuchtung befinden, die nicht nur dem Zweck dienen soll, richtig belichtete und gut ausgeleuchtete Bilder des Kunden aufnehmen zu können, sondern auch, die anzuprobierenden Verkaufsobjekte im richtigen Licht betrachten zu können. Dazu ist sowohl die Art und Stärke der Beleuchtungsquelle, als auch die Position der Beleuchtungsquelle innerhalb des Verkaufssystems, und insbesondere zum Kunden (z.B. eine seitliche Beleuchtung) von Bedeutung. Sowohl die Beleuchtungsstärke als auch die Position sollen vom Kunden und/oder dem Verkaufspersonal steuerbar sein, damit die günstigste Beleuchtung in verschiedenen Situationen möglich ist. Dabei kann auch die Videokamera so ausgestaltet sein, daß sie mit einer automatischen Einstellung versehen ist, die, abhängig von der jeweiligen Situation, die Beleuchtungsstärke und/oder die Position des Beleuchtungskörpers automatisch einstellt, um die günstigsten Werte für z.B. die Helligkeit, den Kontrast, die Farbschattierung, Farbnuance, Schärfe usw. zu erhalten.

Für eine optimale Bildwiedergabe, aber auch für eine optimale Wirkung der anzuprobierenden Verkaufsobjekte, ist die Distanz des Kunden zur Videokamera von großer Bedeutung. Zweckmäßigerweise enthält das erfindungsgemäße Verkaufssystem auch eine Distanzvorgabeeinrichtung zum Einstellen der günstigsten Distanz des Kundens zur Videokamera; diese Distanzvorgabeeinrichtung, mit der insbesondere ein Mindestwert der Distanz eingehalten werden soll, kann z.B. aus einer geeignet angebrachten Markierung, einem Stab, z.B.

mit Entfernungsangaben, einer Schranke, usw., bestehen, die von der Videokamera aber zweckmäßigerweise nicht aufgenommen werden.

Vorzugsweise ist auch eine Bedienungseinrichtung zum Steuern und/oder Bedienen aller Systemelemente, die vom Kunden und/oder dem Verkaufspersonal gesteuert und/oder bedient werden sollen, vorgesehen, die zweckmäßigerweise so ausgebildet und angebracht ist, daß der Kunde die Bedienungseinrichtung in seiner natürlichen Körperhaltung betätigen kann. Die Bedienungseinrichtung ist deshalb insbesondere als bewegbare drahtlose oder drahtgebundene Fernsteuerung ausgebildet.

Die Einstellung der Brennweite der Videokamera kann, insbesondere abhängig von der Natur der Verkaufsobjekte, automatisch oder durch Hand eingestellt werden. Zur Anprobe von Modellkleidern, die meist mit Bewegungsabläufen verbunden ist, und Bildsequenzen erfordert, ist eine automatische Foccussierung zweckmäßig, während z.B. für die Anprobe von Brillen oder Schmuck eine fixierte Brennweite verwendet werden kann.

Die Art und Weise der Anordnung der Verkaufssystemelemente hängt auch von den für die Anprobe vorhandenen Umgebungsbedingungen ab. So kann es z.B., wenn ein Verkauf in einer offenen oder nicht einzeln abgeschlossenen Umgebung stattfindet, wie z.B. auf Messen, Jahrmärkten usw., zweckmäßig sein, die Systemelemente, also insbesondere Spiegel, Videokamera, Speichereinrichtung, Bildwiedergabeeinrichtung, Beleuchtungseinrichtung usw., innerhalb einer transportablen Einheit, z.B. einer stoßunempfindlichen Kabine, anzubringen, während ein abgeschlossener Verkaufsraum, z.B. eine Modeboutique, zweckmäßigerweise mit Systemkomponenten arbeitet, die

entsprechend der jeweiligen Gegebenheiten und dem jeweiligen Zweck angeordnet werden. Die Anordnung und insbesondere der Abstand zwischen den einzelnen Verkaufssystemelementen ist auch stark von der Art der Verkaufsobjekte abhängig; wenn z.B. eine genaue Betrachtung erforderlich ist, wie z.B. bei einem Optiker, wird eine andere Anordnung/Distanz und Beleuchtungsart verwendet werden, als z.B. zur Anprobe von Kleidungsstücken. Für eine genauere Betrachtung, wie z.B. bei einem Optiker, kann es deshalb z.B. auch zweckmäßig sein, den als Berührungsschirm ausgebildeten Monitor, oder den Monitor mit Bedienungstasten, geneigt anzubringen, um ihn der Höhe des Kundens, z.B. in sitzender Position, anzupassen.

In einer transportablen Einheit können die einzelnen Verkaufssystemelemente z.B. auf einer Plattform entsprechender Größe, die z.B. mit aufklappbaren Wänden versehen sein kann, so montiert sein, daß innerhalb bestimmter Grenzbereiche noch eine Veränderung der gegenseitigen Stellung zueinander möglich ist.

Eine weitere Verwendungsmöglichkeit der Erfindung besteht darin, daß das System dann, wenn es an sich abgeschaltet ist und z.B. nach Ladenschluß „inaktiv" in der Ecke steht, gleichzeitig als Überwachungskamera, also im Rahmen eines Sicherheitssystems verwendet werden kann. Selbstverständlich ist es auch möglich, das System bei geöffnetem Geschäft in dieser Art und Weise zu verwenden, um beispielsweise Ladendiebstahl zu verhindern bzw. zu dokumentieren.

Gegenstand der Erfindung ist deshalb auch die Verwendung eines erfindungsgemäßen Verkaufssystems zur Überwachung von Räumen, Raumabschnitten oder dergleichen Gebäudeteilen.

Das erfindungsgemäße Verkaufssystem wird nun unter Bezugnahme auf die Zeichnung beispielhaft erläutert, ohne den Rahmen der Erfindung darauf zu beschränken.

Hierbei zeigen:
Figur 1 eine schematische Darstellung eines erfindungsgemäß verwendeten Spiegels mit dahinter befindlicher Videokamera;
Figur 2 eine schematische Darstellung der Anordnung einzelner Elemente des Verkaufssystems.

In Figur 1 ist eine Videokamera (A) mit einem teilweise semitransparenten Spiegel (S) verbunden. Der Spiegel ist an einer drehbaren und in einer Führung (T) höhenverstellbaren Achse (B) befestigt, wodurch eine Höhen- und/oder Neigungsverstellung ermöglicht wird, und der Spiegel z.B. leicht der Länge und Größe des Kundens angepaßt werden kann (z.B. sitzend oder stehend). Die Kamera (A) ist um die gleiche Achse (B) drehbar beweglich, wodurch sichergestellt wird, daß sich die Kamera (Objektivachse) in einem Winkel von 90 ° zur Spiegelebene befindet. Der Spiegel besteht aus den drei Bereichen (C), (D) und (E), die einen verschiedenen Reflektionsgrad und eine verschiedene Transparenz besitzen.

Die Bereiche (C), (D) und (E) sind so angeordnet, daß der Bereich (C) im Zentrum/Augenhöhe, und damit vorzugsweise im Bereich der Augenkontaktzone liegt, und (D) und (E) in den äußeren Bereichen einer optimalen Betrachtungszone. Durch eine verschiedene Einfärbung/Tönung der Bereiche (C), (D) und (E), oder eine sichtbare Begrenzung dieser Bereiche, wie in der Figur 1 dargestellt, bekommt der Kunde den Eindruck eines qualitativ hochwertigen Spiegels, der insbesondere zur Anprobe der Verkaufsobjekte ausgestaltet wurde, wobei dem Kunden auch gleichzeitig ein Hinweis auf den besten Aufnahmebereich, der sich im Bereich (D), und insbesondere in und in der Nähe des Bereiches (C) befindet, gegeben wird.

(C) ist der Bereich des teilweise semitransparenten Spiegels, der groß genug ist, um es der Kamera zu ermöglichen, das Bild aufzunehmen. Im Hinblick auf die Spiegelwirkung muß die Qualität des semitransparenten Bereichs (C) des Spiegels nicht die von üblichen Silberspiegeln aufweisen;

(D) ist ein Silberspiegel hoher Qualität, wie er insbesondere beim Modellstehen verwendet wird;

(E) ist ein Silberspiegel, der mit Grau- oder Farbtönen schwach eingefärbt sein kann.

In der Anordnung der Figur 2 befindet sich der Kunde in einer optimalen Position, was durch eine Kombination der verschiedenen Bereiche des Spiegels (C), (D) und (E) nach Figur 1 und dem Abstand zwischen dem Kunden und dem Spiegel bewirkt wird. Die Mindestdistanz (G) wird durch einen Stab oder einen Ablagetisch (F), der sich vor dem Berührungsschirm/Monitor befindet, und dem Kunden durch die Stablänge bzw. die Tischtiefe den Minimalabstand (G) anzeigt, gesteuert. Der Stab bzw. Tisch (F) kann am Monitor befestigt sein, aber auch freistehend sein.

Der Bedienknopf (I) befindet sich in einer Position, die vom Kunden mit entspannter Armlänge (J) erreicht werden kann; durch Drücken des Knopfes (I) wird die Videokamera (A), die sich hinter dem Spiegel (S) befindet, in Betrieb genommen. Die in Figur 2 dargestellte beispielhafte Anordnung eignet sich insbesondere für eine genaue Betrachtung, z.B. zur Anprobe von Schmuck oder Brillen, bei der sich der Kunde vorzugsweise in sitzender Position befindet; dazu ist auch der Schirm des Monitors (H) neig- und schwenkbar ausgestaltet.

In der Ausführungsform der Figur 2 sind eine zusätzliche Kamera A1 und ein zusätzlicher Spiegel L vorgesehen. Der Spiegel L befindet sich hinter dem teilweise semitransparenten Spiegel S, z.B. im hinteren Teil einer transportablen Einheit, wie z.B. einer Kabine. Der Spiegel L ist länger als der Spiegel S, z.B. ein Spiegel voller Länge, wie er zur Anprobe von Kleidungsstücken, z.B. Mänteln, Hosen, Schuhen usw., üblich ist. Der Spiegel L muß nicht unbedingt einen semitransparenten Bereich aufweisen, ist aber vorzugsweise auch in drei Zonen, die den Zonen C, D und E des Spiegels S entsprechen, unterteilt, um dem Kunden das gleiche Betrachtungsgefühl wie vor dem Spiegel S zu vermitteln. Der Spiegel L ist an der Achse M befestigt und um diese schwenkbar. Zur Entfernung des Spiegels L und/oder für einen leichten Transport, z.B. in eine andere Verkaufsabteilung eines Warenhauses, sind die Elemente des Systems, z.B. die Spiegelanordnungen S und/oder M, vorzugsweise auf Rollen gelagert. Neben den Kameras A und A1 kann es in einigen Fällen auch zweckmäßig sein, zusätzliche Kameras, die sich z.B. auf einem Stativ befinden und/oder vom Verkaufspersonal gehalten und auch bedient werden, vorzusehen.

Bei einer anderen Ausführungsform wird eine Aufnahmeeinrichtung (Videokamera) mit extrem kleinem Durchmesser des Objektivs verwendet, wobei dieses Objektiv direkt in den Spiegel eingesetzt ist, so daß kein semitransparenter Bereich notwendig ist. Wenn der Durchmesser des Objektis gering genug ist, kann sich der Kunde dann z.B. störungsfrei zur Begutachtung eines Kleidungsstückes im Ganzen betrachten. Bei dieser Ausführungsform der Erfindung kann die Objektivachse bzw. der Blickwinkel des Kameraobjektivs auch so ausgerichtet werden, daß sie nicht direkt senkrecht zum Spiegel liegt. Die Kamera kann dann beispielsweise „etwas von oben" auf den Kunden blicken, wobei der Neigungswinkel dann zweckmäßigerweise derart eingestellt

ist, daß das (vom Kunden wahrnehmbare) Objektiv gerade außerhalb seines Spiegelbildes liegt. Vorzugsweise wird die Kamera aber auch bei dieser Ausführungsform so eingestellt, daß eine optimale Augenkontaktzone gewährleistet ist.

P A T E N T A N S P R Ü C H E

1. Verkaufssystem mit einem Spiegel, in welchem ein Kunde sich mit einem Verkaufsobjekt, z.B. einer Brille, einem Kleidungsstück, Schmuck oder dergleichen, betrachten kann,
g e k e n n z e i c h n e t d u r c h
eine Videokamera (A), welche relativ zum Spiegel (S) so angeordnet ist, daß der Kunde, wenn er sich im Spiegel (S) betrachtet, von der Videokamera (A) aufnehmbar ist,
eine Speichereinrichtung, die vom Kunden oder einer dritten Person zum Speichern und Wiedergeben von Bildern, die von der Videokamera (A) aufgenommen wurden, betätigbar ist, und
eine Bildwiedergabeeinrichtung zum Wiedergeben der aufgenommenen Bilder zur Betrachtung durch den Kunden.

2. Verkaufssystem nach Anspruch 1,
d a d u r c h g e k e n n z e i c h n e t,
daß der Spiegel (S) derart zusammen mit der Videokamera (A) einstellbar ist, daß der Kunde unabhängig von seiner Körpergröße und/oder von einem zu betrachtenden Körperabschnitt den Spiegel (S) nach seinem Blickfeld einstellen kann.

3. Verkaufssystem nach Anspruch 6,
d a d u r c h g e k e n n z e i c h n e t,
daß die Videokamera (A) hinter dem semitransparenten Bereich (C) des Spiegels (S) und mit dem Spiegel (S) zusammen beweglich derart montiert ist, daß die Videokamera (A) durch den semitransparenten Bereich (C) hindurch Bilder vom Kunden aufnehmen und der Kunde sich

auch im semitransparenten Bereich (C) des Spiegels (S) betrachten kann.

4. Verkaufssystem nach einem der vorhergehenden Ansprüche, d a d u r c h g e k e n n z e i c h n e t, daß der Spiegel (S) einen für den Betrachter erkennbaren Bereich (C) aufweist, auf den der Betrachter seine Aufmerksamkeit lenkt, und der auf diese Weise zur Zone des Augenkontaktes des Betrachters wird.

5. Verkaufssystem nach Anspruch 3, d a d u r c h g e k e n n z e i c h n e t, daß der Bereich (C) ein zentraler Bereich des Spiegels (S) ist.

6. Verkaufssystem nach Anspruch 3, d a d u r c h g e k e n n z e i c h n e t, daß der Bereich (C) durch Einfärben, Tönen und/oder dergleichen Markierungseinrichtungen erkennbar ist.

7. Verkaufssystem nach Anspruch 4, d a d u r c h g e k e n n z e i c h n e t, daß der Bereich (C) semitransparent ist.

8. Verkaufssystem nach Anspruch 3, d a d u r c h g e k e n n z e i c h n e t, daß der semitransparente Bereich (C) von seiner Größe und/oder Geometrie her derart ausgebildet ist, daß seine Ränder im wesentlichen dem von der Videokamera (A) aufnehmbaren Bildausschnitt entsprechen und diesen gerade nicht oder nur unwesentlich begrenzen.

9. Verkaufssystem nach einem der vorhergehenden Ansprüche, d a d u r c h g e k e n n z e i c h n e t, daß der Spiegel (S) so groß ausgebildet ist, daß ein

Kunde im Spiegel (S) einen größeren Bereich als Spiegelbild betrachten kann, als er von der Videokamera (A) aufgenommen wird.

10. Verkaufssystem nach Anspruch 9, d a d u r c h g e k e n n z e i c h n e t, daß ein Spiegelbereich (D), welcher dem von der Kamera aufnehmbaren Bildausschnitt entspricht, auf dem Spiegel durch Einfärbungen, Tönungen oder dergleichen Markierungseinrichtungen erkennbar gemacht ist.

11. Verkaufssystem nach einem der vorhergehenden Ansprüche, d a d u r c h g e k e n n z e i c h n e t, daß die Speichereinrichtung zur Wiedergabe einzelner Standbilder und/oder von Bildsequenzen vorgegebener Länge ausgebildet ist.

12. Verkaufssystem nach einem der vorhergehenden Ansprüche, d a d u r c h g e k e n n z e i c h n e t, daß es eine Druckeinrichtung enthält, die mit der Speichereinrichtung zum Ausdrucken einzelner Standbilder operativ verbunden ist.

13. Verkaufssystem nach einem der Ansprüche 7 bis 12, d a d u r c h g e k e n n z e i c h n e t, daß die Kamera (A) in einem die Kamera umschließenden Raum hinter dem Spiegel montiert ist, der lichtdicht abgeschlossen ist.

14. Verkaufssystem nach einem der vorhergehenden Ansprüche, d a d u r c h g e k e n n z e i c h n e t, daß es eine Beleuchtungseinrichtung zum Beleuchten der von der Videokamera (A) aufzunehmenden Situation enthält, die steuerbar und/oder einstellbar ausgebildet und angebracht ist.

15. Verkaufssystem nach einem der vorhergehenden Ansprüche, d a d u r c h g e k e n n z e i c h n e t, daß sie eine Distanzvorgabeeinrichtung (F) zum Einstellen der Distanz (G) des Kunden zur Videokamera (A) enthält.

16. Verkaufssystem nach einem der vorhergehenden Ansprüche, d a d u r c h g e k e n n z e i c h n e t, daß es eine Bedienungseinrichtung (I) zum Steuern und Bedienen von Systemelementen, insbesondere der Videokamera (A) und/oder der Speichereinrichtung, durch den Kunden oder eine dritte Person enthält, die derart ausgebildet und angebracht ist, daß der Kunde die Bedienungseinrichtung in einer natürlichen Körperhaltung betätigen kann.

17. Verkaufssystem nach Anspruch 16, d a d u r c h g e k e n n z e i c h n e t, daß die Bedienungseinrichtung (I) als bewegbare drahtlose oder drahtgebundene Fernsteuerung ausgebildet ist.

18. Verwendung eines Verkaufssystems nach einem der vorhergehenden Ansprüche zur Überwachung von Räumen, Raumabschnitten oder dergleichen Gebäudeteilen.

19. Spiegel, verwendbar in einem Verkaufssystem nach einem der Ansprüche 1 bis 13, d a d u r c h g e k e n n z e i c h n e t, daß der Spiegel (S) einen für den Betrachter erkennbaren Bereich (C) aufweist, auf den der Betrachter seine Aufmerksamkeit lenkt, und der auf diese Weise zur Zone des Augenkontaktes vom Betrachter wird.

20. Spiegel nach Anspruch 19,
d a d u r c h g e k e n n z e i c h n e t,
daß der Bereich (C) ein zentraler Bereich des Spiegels (S) ist.

21. Spiegel nach Anspruch 19 oder 20,
d a d u r c h g e k e n n z e i c h n e t,
daß der Bereich (C) durch Einfärben, Tönen oder dergleichen Markierungen erkennbar ist.

22. Spiegel nach einem der Ansprüche 19 bis 21, verwendbar in einem Verkaufssystem nach einem der Ansprüche 6 bis 17,
d a d u r c h g e k e n n z e i c h n e t,
daß der Bereich (C) semitransparent ist.

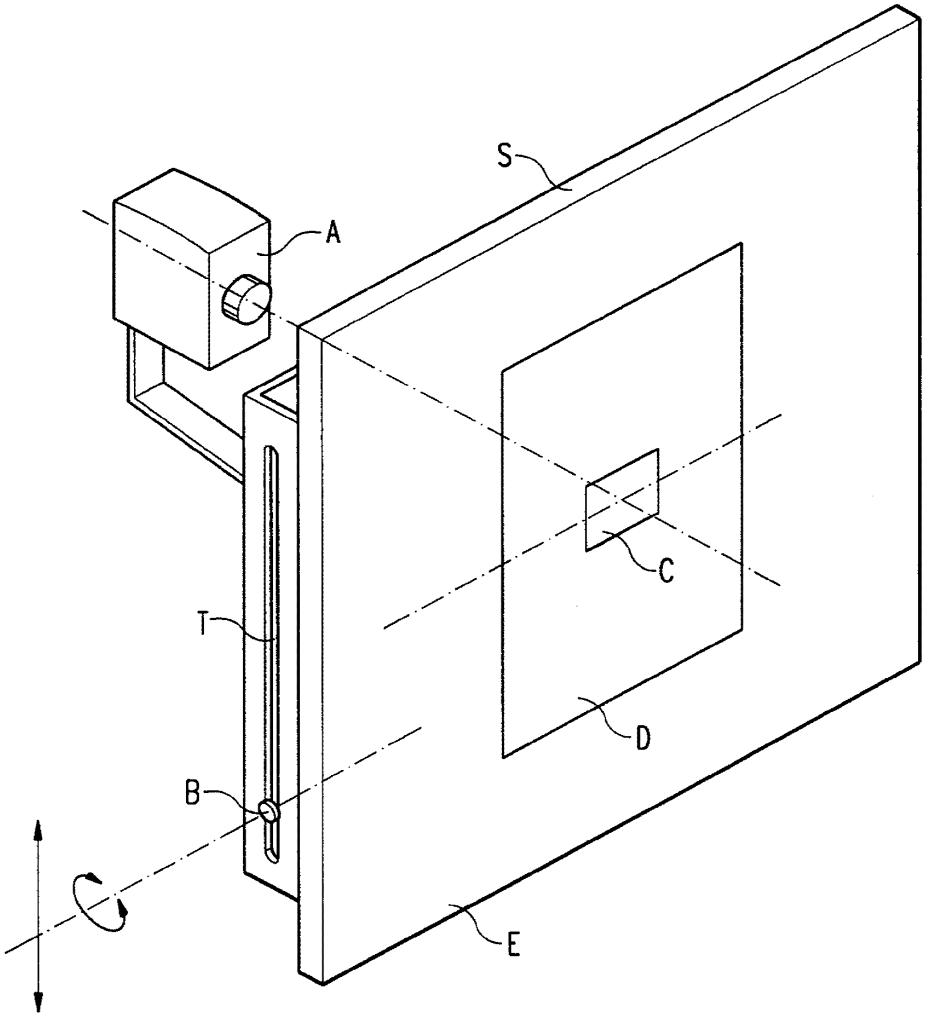

Fig. 1

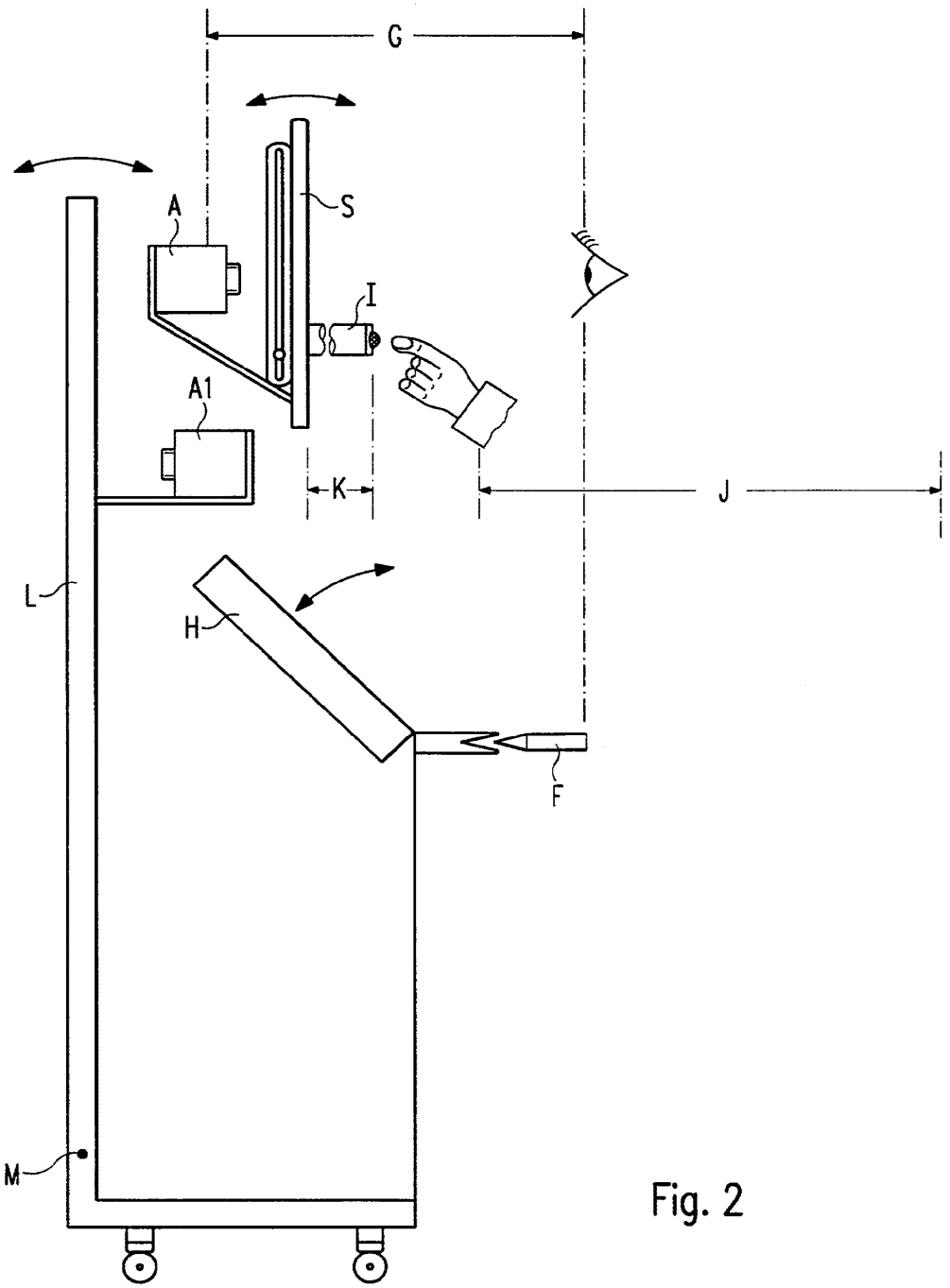

Fig. 2

INTERNATIONAL SEARCH REPORT

Intern al Application No
PCT/EP 99/07638

A. CLASSIFICATION OF SUBJECT MATTER
IPC 7 A45D44/00 G09B19/00

According to International Patent Classification (IPC) or to both national classification and IPC

B. FIELDS SEARCHED

Minimum documentation searched (classification system followed by classification symbols)
IPC 7 G07F A45D G09B G03B A47G

Documentation searched other than minimum documentation to the extent that such documents are included in the fields searched

Electronic data base consulted during the international search (name of data base and, where practical, search terms used)

C. DOCUMENTS CONSIDERED TO BE RELEVANT

Category *	Citation of document, with indication, where appropriate, of the relevant passages	Relevant to claim No.
X	FR 2 664 258 A (MARINIER STEPHANE) 10 January 1992 (1992-01-10) abstract; figures 1-7	19-22
A	US 4 864 410 A (VASSILADIS ARTHUR ET AL) 5 September 1989 (1989-09-05) column 2, line 49 - line 61 column 4, line 28 - line 41; figures 2,3 abstract	1-15, 18-22
A	US 4 434 467 A (SCOTT DALE) 28 February 1984 (1984-02-28) column 1, line 16 - line 21 column 3, line 58 -column 4, line 19; figure 1 abstract	1-15, 18-22

-/--

[X] Further documents are listed in the continuation of box C.

[X] Patent family members are listed in annex.

* Special categories of cited documents :

"A" document defining the general state of the art which is not considered to be of particular relevance

"E" earlier document but published on or after the international filing date

"L" document which may throw doubts on priority claim(s) or which is cited to establish the publication date of another citation or other special reason (as specified)

"O" document referring to an oral disclosure, use, exhibition or other means

"P" document published prior to the international filing date but later than the priority date claimed

"T" later document published after the international filing date or priority date and not in conflict with the application but cited to understand the principle or theory underlying the invention

"X" document of particular relevance; the claimed invention cannot be considered novel or cannot be considered to involve an inventive step when the document is taken alone

"Y" document of particular relevance; the claimed invention cannot be considered to involve an inventive step when the document is combined with one or more other such documents, such combination being obvious to a person skilled in the art.

"&" document member of the same patent family

Date of the actual completion of the international search	Date of mailing of the international search report
15 February 2000	22/02/2000

Name and mailing address of the ISA	Authorized officer
European Patent Office, P.B. 5818 Patentlaan 2 NL - 2280 HV Rijswijk Tel. (+31-70) 340-2040, Tx. 31 651 epo nl, Fax: (+31-70) 340-3016	Wauters, J

1

Form PCT/ISA/210 (second sheet) (July 1992)

Microsoft Ex. 1002 - Page 182 of 451

INTERNATIONAL SEARCH REPORT

Intern al Application No
PCT/EP 99/07638

C.(Continuation) DOCUMENTS CONSIDERED TO BE RELEVANT

Category °	Citation of document, with indication, where appropriate, of the relevant passages	Relevant to claim No.
A	US 4 261 012 A (MALOOMIAN LAURENCE G) 7 April 1981 (1981-04-07) column 5, line 12 - line 21; figure 1 abstract	1-15, 18-22
A	US 5 621 492 A (BEVERIDGE IAIN M ET AL) 15 April 1997 (1997-04-15) column 3, line 10 - line 18; figures 2,3,5,6 abstract	1-15, 18-22
A	US 5 768 142 A (JACOBS HERBERT H) 16 June 1998 (1998-06-16) column 3, line 18 - line 29; figure 1 abstract	1-15, 18-22
A	US 5 184 160 A (MASSARSKY YEFIM) 2 February 1993 (1993-02-02) abstract; figures 2-4	1-3

1

Form PCT/ISA/210 (continuation of second sheet) (July 1992)

Microsoft Ex. 1002 - Page 183 of 451

INTERNATIONAL SEARCH REPORT

Information on patent family members

Inten nal Application No
PCT/EP 99/07638

Patent document cited in search report	Publication date	Patent family member(s)	Publication date
FR 2664258 A	10-01-1992	NONE	
US 4864410 A	05-09-1989	NONE	
US 4434467 A	28-02-1984	US 4258478 A	31-03-1981
US 4261012 A	07-04-1981	NONE	
US 5621492 A	15-04-1997	CA 2211394 A	01-08-1996
		EP 0806107 A	12-11-1997
		JP 10503343 T	24-03-1998
		WO 9623386 A	01-08-1996
US 5768142 A	16-06-1998	NONE	
US 5184160 A	02-02-1993	NONE	

Form PCT/ISA/210 (patent family annex) (July 1992)

INTERNATIONALER RECHERCHENBERICHT

Intern ales Aktenzeichen
PCT/EP 99/07638

A. KLASSIFIZIERUNG DES ANMELDUNGSGEGENSTANDES
IPK 7 A45D44/00 G09B19/00

Nach der Internationalen Patentklassifikation (IPK) oder nach der nationalen Klassifikation und der IPK

B. RECHERCHIERTE GEBIETE

Recherchierter Mindestprüfstoff (Klassifikationssystem und Klassifikationssymbole)
IPK 7 G07F A45D G09B G03B A47G

Recherchierte aber nicht zum Mindestprüfstoff gehörende Veröffentlichungen, soweit diese unter die recherchierten Gebiete fallen

Während der Internationalen Recherche konsultierte elektronische Datenbank (Name der Datenbank und evtl. verwendete Suchbegriffe)

C. ALS WESENTLICH ANGESEHENE UNTERLAGEN

Kategorie*	Bezeichnung der Veröffentlichung, soweit erforderlich unter Angabe der in Betracht kommenden Teile	Betr. Anspruch Nr.
X	FR 2 664 258 A (MARINIER STEPHANE) 10. Januar 1992 (1992-01-10) Zusammenfassung; Abbildungen 1-7	19-22
A	US 4 864 410 A (VASSILADIS ARTHUR ET AL) 5. September 1989 (1989-09-05) Spalte 2, Zeile 49 - Zeile 61 Spalte 4, Zeile 28 - Zeile 41; Abbildungen 2,3 Zusammenfassung	1-15, 18-22
A	US 4 434 467 A (SCOTT DALE) 28. Februar 1984 (1984-02-28) Spalte 1, Zeile 16 - Zeile 21 Spalte 3, Zeile 58 -Spalte 4, Zeile 19; Abbildung 1 Zusammenfassung	1-15, 18-22

-/--

[X] Weitere Veröffentlichungen sind der Fortsetzung von Feld C zu entnehmen

[X] Siehe Anhang Patentfamilie

* Besondere Kategorien von angegebenen Veröffentlichungen :
"A" Veröffentlichung, die den allgemeinen Stand der Technik definiert, aber nicht als besonders bedeutsam anzusehen ist
"E" älteres Dokument, das jedoch erst am oder nach dem internationalen Anmeldedatum veröffentlicht worden ist
"L" Veröffentlichung, die geeignet ist, einen Prioritätsanspruch zweifelhaft erscheinen zu lassen, oder durch die das Veröffentlichungsdatum einer anderen im Recherchenbericht genannten Veröffentlichung belegt werden soll oder die aus einem anderen besonderen Grund angegeben ist (wie ausgeführt)
"O" Veröffentlichung, die sich auf eine mündliche Offenbarung, eine Benutzung, eine Ausstellung oder andere Maßnahmen bezieht
"P" Veröffentlichung, die vor dem internationalen Anmeldedatum, aber nach dem beanspruchten Prioritätsdatum veröffentlicht worden ist

"T" Spätere Veröffentlichung, die nach dem internationalen Anmeldedatum oder dem Prioritätsdatum veröffentlicht worden ist und mit der Anmeldung nicht kollidiert, sondern nur zum Verständnis des der Erfindung zugrundeliegenden Prinzips oder der ihr zugrundeliegenden Theorie angegeben ist
"X" Veröffentlichung von besonderer Bedeutung; die beanspruchte Erfindung kann allein aufgrund dieser Veröffentlichung nicht als neu oder auf erfinderischer Tätigkeit beruhend betrachtet werden
"Y" Veröffentlichung von besonderer Bedeutung; die beanspruchte Erfindung kann nicht als auf erfinderischer Tätigkeit beruhend betrachtet werden, wenn die Veröffentlichung mit einer oder mehreren anderen Veröffentlichungen dieser Kategorie in Verbindung gebracht wird und diese Verbindung für einen Fachmann naheliegend ist
"&" Veröffentlichung, die Mitglied derselben Patentfamilie ist

Datum des Abschlusses der Internationalen Recherche	Absendedatum des Internationalen Recherchenberichts
15. Februar 2000	22/02/2000
Name und Postanschrift der Internationalen Recherchenbehörde Europäisches Patentamt, P.B. 5818 Patentlaan 2 NL – 2280 HV Rijswijk Tel. (+31–70) 340–2040, Tx. 31 651 epo nl, Fax: (+31–70) 340–3016	**Bevollmächtigter Bediensteter** Wauters, J

1

Formblatt PCT/ISA/210 (Blatt 2) (Juli 1992)

Microsoft Ex. 1002 - Page 185 of 451

INTERNATIONALER RECHERCHENBERICHT

Intern. nales Aktenzeichen
PCT/EP 99/07638

C.(Fortsetzung) ALS WESENTLICH ANGESEHENE UNTERLAGEN

Kategorie°	Bezeichnung der Veröffentlichung, soweit erforderlich unter Angabe der in Betracht kommenden Teile	Betr. Anspruch Nr.
A	US 4 261 012 A (MALOOMIAN LAURENCE G) 7. April 1981 (1981-04-07) Spalte 5, Zeile 12 - Zeile 21; Abbildung 1 Zusammenfassung	1-15, 18-22
A	US 5 621 492 A (BEVERIDGE IAIN M ET AL) 15. April 1997 (1997-04-15) Spalte 3, Zeile 10 - Zeile 18; Abbildungen 2,3,5,6 Zusammenfassung	1-15, 18-22
A	US 5 768 142 A (JACOBS HERBERT H) 16. Juni 1998 (1998-06-16) Spalte 3, Zeile 18 - Zeile 29; Abbildung 1 Zusammenfassung	1-15, 18-22
A	US 5 184 160 A (MASSARSKY YEFIM) 2. Februar 1993 (1993-02-02) Zusammenfassung; Abbildungen 2-4	1-3

1

INTERNATIONALER RECHERCHENBERICHT

Angaben zu Veröffentlichungen, die zur selben Patentfamilie gehören

Interne nales Aktenzeichen
PCT/EP 99/07638

Im Recherchenbericht angeführtes Patentdokument	Datum der Veröffentlichung	Mitglied(er) der Patentfamilie	Datum der Veröffentlichung
FR 2664258 A	10-01-1992	KEINE	
US 4864410 A	05-09-1989	KEINE	
US 4434467 A	28-02-1984	US 4258478 A	31-03-1981
US 4261012 A	07-04-1981	KEINE	
US 5621492 A	15-04-1997	CA 2211394 A EP 0806107 A JP 10503343 T WO 9623386 A	01-08-1996 12-11-1997 24-03-1998 01-08-1996
US 5768142 A	16-06-1998	KEINE	
US 5184160 A	02-02-1993	KEINE	

PATENT COOPERATION TREATY

From the INTERNATIONAL SEARCHING AUTHORITY

To:
EITAN LAW GROUP
11 HAMENOFIM ST
P.O. BOX 2081
HERZLIA, ISRAEL 46120

RECEIVED 28 -04- 2007 EITAN LAW GROUP

PCT

NOTIFICATION OF TRANSMITTAL OF THE INTERNATIONAL SEARCH REPORT AND THE WRITTEN OPINION OF THE INTERNATIONAL SEARCHING AUTHORITY, OR THE DECLARATION

(PCT Rule 44.1)

	Date of mailing (*day/month/year*)
Applicant's or agent's file reference P-7751-PC	**FOR FURTHER ACTION** See paragraphs 1 and 4 below
International application No PCT/IL06/00281	International filing date (*day/month/year*) 01 March 2006 (01.03.2006)
Applicant NISSI VILCOVSKY	

1 ☒ The applicant is hereby notified that the international search report and the written opinion of the International Searching Authority have been established and are transmitted herewith

Filing of amendments and statement under Article 19:
The applicant is entitled, if he so wishes, to amend the claims of the international application (see Rule 46):

When? The time limit for filing such amendments is normally two months from the date of transmittal of the international search report

Where? Directly to the International Bureau of WIPO, 34 chemin des Colombettes 1211 Geneva 20, Switzerland, Facsimile No.: (41-22) 338 82 70

For more detailed instructions, see the notes on the accompanying sheet

2 ☐ The applicant is hereby notified that no international search report will be established and that the declaration under Article 17(2)(a) to that effect and the written opinion of the International Searching Authority are transmitted herewith

3 ☐ **With regard to the protest** against payment of (an) additional fee(s) under Rule 40.2, the applicant is notified that:

☐ the protest together with the decision thereon has been transmitted to the International Bureau together with the applicant's request to forward the texts of both the protest and the decision thereon to the designated Offices

☐ no decision has been made yet on the protest; the applicant will be notified as soon as a decision is made

4 **Reminders**

Shortly after the expiration of **18 months** from the priority date, the international application will be published by the International Bureau. If the applicant wishes to avoid or postpone publication, a notice of withdrawal of the international application, or of the priority claim, must reach the International Bureau as provided in Rules 90*bis* 1 and 90*bis* 3, respectively, before the completion of the technical preparations for international publication

The applicant may submit comments on an informal basis on the written opinion of the International Searching Authority to the International Bureau. The International Bureau will send a copy of such comments to all designated Offices unless an international preliminary examination report has been or is to be established. These comments would also be made available to the public but not before the expiration of 30 months from the priority date

Within **19 months** from the priority date, but only in respect of some designated Offices, a demand for international preliminary examination must be filed if the applicant wishes to postpone the entry into the national phase **until 30 months** from the priority date (in some Offices even later); otherwise, the applicant must, **within 20 months** from the priority date, perform the prescribed acts for entry into the national phase before those designated Offices

In respect of other designated Offices, the time limit of **30 months** (or later) will apply even if no demand is filed within 19 months

See the Annex to Form PCT/IB/301 and, for details about the applicable time limits, Office by Office, see the *PCT Applicant's Guide*, Volume II, National Chapters and the WIPO Internet site

Name and mailing address of the ISA/ US Mail Stop PCT, Attn: ISA/US Commissioner for Patents P.O. Box 1450 Alexandria, Virginia 22313-1450 Facsimile No. (571) 273-3201	Authorized officer VIJAY SHANKAR Telephone No. 571-272-7682

Form PCT/ISA/220 (January 2004) (*See notes on accompanying sheet*)

PATENT COOPERATION TREATY

From the INTERNATIONAL SEARCHING AUTHORITY

To:
EITAN LAW GROUP
11 HAMENOFIM ST
P.O. BOX 2081
HERZLIA, ISRAEL 46120

RECEIVED
28 -06- 2007
EITAN LAW GROUP

PCT

NOTIFICATION OF TRANSMITTAL OF THE INTERNATIONAL SEARCH REPORT AND THE WRITTEN OPINION OF THE INTERNATIONAL SEARCHING AUTHORITY, OR THE DECLARATION

(PCT Rule 44.1)

	Date of mailing (*day/month/year*) 12 JUN 2007
Applicant's or agent's file reference P-7751-PC	**FOR FURTHER ACTION** See paragraphs 1 and 4 below
International application No PCT/IL06/00281	International filing date (*day/month/year*) 01 March 2006 (01.03.2006)
Applicant NISSI VILCOVSKY	

1 ☒ The applicant is hereby notified that the international search report and the written opinion of the International Searching Authority have been established and are transmitted herewith

Filing of amendments and statement under Article 19:
The applicant is entitled, if he so wishes, to amend the claims of the international application (see Rule 46):

When? The time limit for filing such amendments is normally two months from the date of transmittal of the international search report

Where? Directly to the International Bureau of WIPO, 34 chemin des Colombettes 1211 Geneva 20, Switzerland, Facsimile No.: (41-22) 338 82 70

For more detailed instructions, see the notes on the accompanying sheet

2 ☐ The applicant is hereby notified that no international search report will be established and that the declaration under Article 17(2)(a) to that effect and the written opinion of the International Searching Authority are transmitted herewith

3 ☐ **With regard to the protest** against payment of (an) additional fee(s) under Rule 40.2, the applicant is notified that:

☐ the protest together with the decision thereon has been transmitted to the International Bureau together with the applicant's request to forward the texts of both the protest and the decision thereon to the designated Offices

☐ no decision has been made yet on the protest; the applicant will be notified as soon as a decision is made

4 **Reminders**

Shortly after the expiration of **18 months** from the priority date, the international application will be published by the International Bureau. If the applicant wishes to avoid or postpone publication, a notice of withdrawal of the international application, or of the priority claim, must reach the International Bureau as provided in Rules 90*bis* 1 and 90*bis* 3, respectively, before the completion of the technical preparations for international publication.

The applicant may submit comments on an informal basis on the written opinion of the International Searching Authority to the International Bureau. The International Bureau will send a copy of such comments to all designated Offices unless an international preliminary examination report has been or is to be established. These comments would also be made available to the public but not before the expiration of 30 months from the priority date.

Within **19 months** from the priority date, but only in respect of some designated Offices, a demand for international preliminary examination must be filed if the applicant wishes to postpone the entry into the national phase **until 30 months** from the priority date (in some Offices even later); otherwise, the applicant must, **within 20 months** from the priority date, perform the prescribed acts for entry into the national phase before those designated Offices.

In respect of other designated Offices, the time limit of **30 months** (or later) will apply even if no demand is filed within 19 months.

See the Annex to Form PCT/IB/301 and, for details about the applicable time limits, Office by Office, see the *PCT Applicant's Guide*, Volume II, National Chapters and the WIPO Internet site.

Name and mailing address of the ISA/US Mail Stop PCT, Attn: ISA/US Commissioner for Patents P.O. Box 1450 Alexandria, Virginia 22313-1450 Facsimile No. (571) 273-3201	Authorized officer VIJAY SHANKAR Telephone No. 571-272-7682

Form PCT/ISA/220 (January 2004) *(See notes on accompanying sheet)*

PATENT COOPERATION TREATY

PCT

INTERNATIONAL SEARCH REPORT

(PCT Article 18 and Rules 43 and 44)

Applicant's or agent's file reference P-7751-PC	**FOR FURTHER ACTION** see Form PCT/ISA/220 as well as, where applicable, item 5 below	
International application No PCT/IL06/00281	International filing date (*day/month/year*) 01 March 2006 (01 03 2006)	(Earliest) Priority Date (*day/month/year*) 01 March 2005 (01 03 2005)
Applicant NISSI VILCOVSKY		

This international search report has been prepared by this International Searching Authority and is transmitted to the applicant according to Article 18 A copy is being transmitted to the International Bureau

This international search report consists of a total of 2 sheets

☒ It is also accompanied by a copy of each prior art document cited in this report

1 **Basis of the Report**

a With regard to the **language**, the international search was carried out on the basis of:

☒ the international application in the language in which it was filed

☐ a translation of the international application into _____, which is the language of a translation furnished for the purposes of international search (Rules 12 3(a) and 23 1(b))

b ☐ With regard to any **nucleotide and/or amino acid sequence** disclosed in the international application, see Box No I

2 ☐ **Certain claims were found unsearchable** (See Box No II)

3 ☐ **Unity of invention is lacking** (See Box No III)

4. With regard to the **title**,

☒ the text is approved as submitted by the applicant

☐ the text has been established by this Authority to read as follows:

5 With regard to the **abstract**,

☒ the text is approved as submitted by the applicant

☐ the text has been established, according to Rule 38 2(b), by this Authority as it appears in Box No IV The applicant may, within one month from the date of mailing of this international search report, submit comments to this Authority

6. With regard to the **drawings**,

a the figure of the **drawings** to be published with the abstract is Figure No 1

☒ as suggested by the applicant

☐ as selected by this Authority, because the applicant failed to suggest a figure

☐ as selected by this Authority, because this figure better characterizes the invention

b ☐ none of the figures is to be published with the abstract

Form PCT/ISA/210 (first sheet) (April 2005)

INTERNATIONAL SEARCH REPORT

International application No
PCT/IL06/00281

A CLASSIFICATION OF SUBJECT MATTER
IPC: G09G 5/00(2006 01),5/08(2006 01)

USPC: 345/156-162,204-215
According to International Patent Classification (IPC) or to both national classification and IPC

B. FIELDS SEARCHED

Minimum documentation searched (classification system followed by classification symbols)
U S : 345/156-162, 204-215

Documentation searched other than minimum documentation to the extent that such documents are included in the fields searched

Electronic data base consulted during the international search (name of data base and, where practicable, search terms used)

C. DOCUMENTS CONSIDERED TO BE RELEVANT

Category *	Citation of document, with indication, where appropriate, of the relevant passages	Relevant to claim No.
X	US 20030085866 A1 (BIMBER et al) 08 May 2003, Figures 1-23; Paragraph 0063-0137	1-12

☐ Further documents are listed in the continuation of Box C. ☐ See patent family annex

* Special categories of cited documents:

"A" document defining the general state of the art which is not considered to be of particular relevance

"E" earlier application or patent published on or after the international filing date

"L" document which may throw doubts on priority claim(s) or which is cited to establish the publication date of another citation or other special reason (as specified)

"O" document referring to an oral disclosure, use, exhibition or other means

"P" document published prior to the international filing date but later than the priority date claimed

"T" later document published after the international filing date or priority date and not in conflict with the application but cited to understand the principle or theory underlying the invention

"X" document of particular relevance; the claimed invention cannot be considered novel or cannot be considered to involve an inventive step when the document is taken alone

Y document of particular relevance; the claimed invention cannot be considered to involve an inventive step when the document is combined with one or more other such documents, such combination being obvious to a person skilled in the art

"&" document member of the same patent family

Date of the actual completion of the international search	Date of mailing of the international search report
15 May 2007 (15.05.2007)	12 JUN 2007
Name and mailing address of the ISA/US Mail Stop PCT, Attn: ISA/US Commissioner for Patents P O Box 1450 Alexandria, Virginia 22313-1450 Facsimile No. (571) 273-3201	Authorized officer VIJAY SHANKAR Telephone No 571-272-7682

Form PCT/ISA/210 (second sheet) (April 2005)

PATENT COOPERATION TREATY

From the
INTERNATIONAL SEARCHING AUTHORITY

To:
EITAN LAW GROUP
11 HAMENOFIM ST
P.O. BOX 2081
HERZLIA, ISRAEL 46120

PCT

WRITTEN OPINION OF THE
INTERNATIONAL SEARCHING AUTHORITY

(PCT Rule 43*bis* 1)

Date of mailing (*day/month/year*) 12 JUN 2007

FOR FURTHER ACTION
See paragraph 2 below

Applicant's or agent's file reference		
P-7751-PC		
International application No	International filing date (*day/month/year*)	Priority date (*day/month/year*)
PCT/IL06/00281	01 March 2006 (01.03.2006)	01 March 2005 (01.03.2005)

International Patent Classification (IPC) or both national classification and IPC

IPC: **G09G 5/00**(2006 01),**5/08**(2006 01)
USPC: 345/156-162,204-215

Applicant

NISSI VILCOVSKY

1 This opinion contains indications relating to the following items:

- [x] Box No I — Basis of the opinion
- [ ] Box No II — Priority
- [ ] Box No III — Non-establishment of opinion with regard to novelty, inventive step and industrial applicability
- [ ] Box No IV — Lack of unity of invention
- [x] Box No V — Reasoned statement under Rule 43*bis* 1(a)(i) with regard to novelty, inventive step or industrial applicability; citations and explanations supporting such statement
- [ ] Box No VI — Certain documents cited
- [ ] Box No VII — Certain defects in the international application
- [ ] Box No VIII — Certain observations on the international application

2 **FURTHER ACTION**

If a demand for international preliminary examination is made, this opinion will be considered to be a written opinion of the International Preliminary Examining Authority ("IPEA") except that this does not apply where the applicant chooses an Authority other than this one to be the IPEA and the chosen IPEA has notified the International Bureau under Rule 66 1*bis(b)* that written opinions of this International Searching Authority will not be so considered

If this opinion is, as provided above, considered to be a written opinion of the IPEA, the applicant is invited to submit to the IPEA a written reply together, where appropriate, with amendments, before the expiration of 3 months from the date of mailing of Form PCT/ISA/220 or before the expiration of 22 months from the priority date, whichever expires later.

For further options, see Form PCT/ISA/220

3 For further details, see notes to Form PCT/ISA/220.

Name and mailing address of the ISA/ US	Date of completion of this opinion	Authorized officer
Mail Stop PCT, Attn: ISA/US Commissioner for Patents P O Box 1450 Alexandria, Virginia 22313-1450 Facsimile No. (571) 273-3201	15 May 2007 (15 05 2007)	VIJAY SHANKAR Telephone No 571-272-7682

Form PCT/ISA/237 (cover sheet) (April 2005)

WRITTEN OPINION OF THE INTERNATIONAL SEARCHING AUTHORITY

International application No

PCT/IL06/00281

Box No. I Basis of this opinion

1 With regard to the **language**, this opinion has been established on the basis of:

☒ the international application in the language in which it was filed

☐ a translation of the international application into _____, which is the language of a translation furnished for the purposes of international search (Rules 12.3(a) and 23.1(b))

2 With regard to any **nucleotide and/or amino acid sequence** disclosed in the international application and necessary to the claimed invention, this opinion has been established on the basis of:

a type of material

☐ a sequence listing

☐ table(s) related to the sequence listing

b format of material

☐ on paper

☐ in electronic form

c time of filing/furnishing

☐ contained in the international application as filed

☐ filed together with the international application in electronic form

☐ furnished subsequently to this Authority for the purposes of search

3 ☐ In addition, in the case that more than one version or copy of a sequence listing and/or table(s) relating thereto has been filed or furnished, the required statements that the information in the subsequent or additional copies is identical to that in the application as filed or does not go beyond the application as filed, as appropriate, were furnished

4 Additional comments:

WRITTEN OPINION OF THE INTERNATIONAL SEARCHING AUTHORITY

International application No
PCT/IL06/00281

Box No. V Reasoned statement under Rule 43 *bis*.1(a)(i) with regard to novelty, inventive step or industrial applicability; citations and explanations supporting such statement

1. Statement

Novelty (N)	Claims	NONE	YES
	Claims	1-12	NO
Inventive step (IS)	Claims	NONE	YES
	Claims	1-12	NO
Industrial applicability (IA)	Claims	1-12	YES
	Claims	NONE	NO

2. Citations and explanations:

Claims 1-12 lacks novelty under PCT Article 33(2) as being anticipated by Bimber et al (US 2003/0085866 A1)

Bimber et al teaches a system to enable appearance comparison, the system comprising at least one interactive imaging and display station, the station comprising: a mirror-display device capable of selectably operating in either or both a mirror mode or a display mode; an imaging device to capture one or more appearances from a field-of-view in front of said mirror-display device; and an image control unit to select the mode of operation of said mirror-display device according to a user command (Figures 1-23; Paragraph 0063-0137)

Bimber et al teaches a method to enable appearance comparison, the method comprising: using a mirror mode of operation of a mirror,display device capable of being selectably operated in either a mirror mode or a display mode; capturing an image corresponding to an appearance of a first trial from a field-of-view in front of said mirror-display device; storing said image; selecting the display mode of operation of said mirror-display device; retrieving said image and displaying the image on said mirror-display device (Figures 1-23; Paragraph 0063-0137)

PATENT COOPERATION TREATY

From the INTERNATIONAL BUREAU

PCT

NOTIFICATION CONCERNING TRANSMITTAL OF COPY OF INTERNATIONAL PRELIMINARY REPORT ON PATENTABILITY (CHAPTER I OF THE PATENT COOPERATION TREATY)
(PCT Rule 44bis.1(c))

To:

EITAN LAW GROUP
11 Hamenofim Street
PO Box 2081
46120 Herzlia
ISRAËL

Date of mailing (*day/month/year*) 20 September 2007 (20.09.2007)	
Applicant's or agent's file reference P-7751-PC	**IMPORTANT NOTICE**

International application No.	International filing date (*day/month/year*)	Priority date (*day/month/year*)
PCT/IL2006/000281	01 March 2006 (01.03.2006)	01 March 2005 (01.03.2005)

Applicant
VILCOVSKY, Nissi

The International Bureau transmits herewith a copy of the international preliminary report on patentability (Chapter I of the Patent Cooperation Treaty)

The International Bureau of WIPO 34, chemin des Colombettes 1211 Geneva 20, Switzerland Facsimile No. +41 22 338 82 70	Authorized officer Simin Baharlou e-mail: pt09.pct@wipo.int

Form PCT/IB/326 (January 2004)

PATENT COOPERATION TREATY

PCT

INTERNATIONAL PRELIMINARY REPORT ON PATENTABILITY

(Chapter I of the Patent Cooperation Treaty)

(PCT Rule 44*bis*)

Applicant's or agent's file reference P-7751-PC	**FOR FURTHER ACTION**	See item 4 below
International application No. PCT/IL2006/000281	International filing date (*day/month/year*) 01 March 2006 (01.03.2006)	Priority date (*day/month/year*) 01 March 2005 (01.03.2005)
International Patent Classification (8th edition unless older edition indicated) See relevant information in Form PCT/ISA/237		
Applicant VILCOVSKY, Nissi		

1. This international preliminary report on patentability (Chapter I) is issued by the International Bureau on behalf of the International Searching Authority under Rule 44 *bis*.1(a).

2. This REPORT consists of a total of 4 sheets, including this cover sheet.

   In the attached sheets, any reference to the written opinion of the International Searching Authority should be read as a reference to the international preliminary report on patentability (Chapter I) instead.

3. This report contains indications relating to the following items:

☒	Box No. I	Basis of the report
☐	Box No. II	Priority
☐	Box No. III	Non-establishment of opinion with regard to novelty, inventive step and industrial applicability
☐	Box No. IV	Lack of unity of invention
☒	Box No. V	Reasoned statement under Article 35(2) with regard to novelty, inventive step or industrial applicability; citations and explanations supporting such statement
☐	Box No. VI	Certain documents cited
☐	Box No. VII	Certain defects in the international application
☐	Box No. VIII	Certain observations on the international application

4. The International Bureau will communicate this report to designated Offices in accordance with Rules 44*bis*.3(c) and 93*bis*.1 but not, except where the applicant makes an express request under Article 23(2), before the expiration of 30 months from the priority date (Rule 44*bis*.2).

	Date of issuance of this report 11 September 2007 (11.09.2007)
The International Bureau of WIPO 34, chemin des Colombettes 1211 Geneva 20, Switzerland Facsimile No. +41 22 338 82 70	Authorized officer Simin Baharlou e-mail: pt09.pct@wipo.int

Form PCT/IB/373 (January 2004)

PATENT COOPERATION TREATY

From the
INTERNATIONAL SEARCHING AUTHORITY

To:
EITAN LAW GROUP
11 HAMENOFIM ST.
P.O. BOX 2081
HERZLIA, ISRAEL 46120

PCT

WRITTEN OPINION OF THE
INTERNATIONAL SEARCHING AUTHORITY

(PCT Rule 43*bis* 1)

Date of mailing (*day/month/year*) 12 JUN 2007

Applicant's or agent's file reference	FOR FURTHER ACTION
P-7751-PC	See paragraph 2 below

International application No.	International filing date (*day/month/year*)	Priority date (*day/month/year*)
PCT/IL06/00281	01 March 2006 (01.03.2006)	01 March 2005 (01.03.2005)

International Patent Classification (IPC) or both national classification and IPC

IPC: **G09G 5/00**(2006.01),5/08(2006 01)
USPC: 345/156-162,204-215

Applicant

NISSI VILCOVSKY

1 This opinion contains indications relating to the following items:

- [x] Box No. I — Basis of the opinion
- [ ] Box No. II — Priority
- [ ] Box No. III — Non-establishment of opinion with regard to novelty, inventive step and industrial applicability
- [ ] Box No. IV — Lack of unity of invention
- [x] Box No. V — Reasoned statement under Rule 43*bis* 1(a)(i) with regard to novelty, inventive step or industrial applicability; citations and explanations supporting such statement
- [ ] Box No. VI — Certain documents cited
- [ ] Box No. VII — Certain defects in the international application
- [ ] Box No. VIII — Certain observations on the international application

2. **FURTHER ACTION**

If a demand for international preliminary examination is made, this opinion will be considered to be a written opinion of the International Preliminary Examining Authority ("IPEA") except that this does not apply where the applicant chooses an Authority other than this one to be the IPEA and the chosen IPEA has notified the International Bureau under Rule 66.1*bis(b)* that written opinions of this International Searching Authority will not be so considered

If this opinion is, as provided above, considered to be a written opinion of the IPEA, the applicant is invited to submit to the IPEA a written reply together, where appropriate, with amendments, before the expiration of 3 months from the date of mailing of Form PCT/ISA/220 or before the expiration of 22 months from the priority date, whichever expires later

For further options, see Form PCT/ISA/220.

3 For further details, see notes to Form PCT/ISA/220.

Name and mailing address of the ISA/US	Date of completion of this opinion	Authorized officer
Mail Stop PCT, Attn: ISA/US Commissioner for Patents P.O. Box 1450 Alexandria, Virginia 22313-1450 Facsimile No. (571) 273-3201	15 May 2007 (15.05.2007)	VIJAY SHANKAR Telephone No. 571-272-7682

Form PCT/ISA/237 (cover sheet) (April 2005)

WRITTEN OPINION OF THE INTERNATIONAL SEARCHING AUTHORITY

International application No.
PCT/IL06/00281

Box No. I Basis of this opinion

1. With regard to the **language**, this opinion has been established on the basis of:

☒ the international application in the language in which it was filed

☐ a translation of the international application into _____, which is the language of a translation furnished for the purposes of international search (Rules 12.3(a) and 23.1(b))

2. With regard to any **nucleotide and/or amino acid sequence** disclosed in the international application and necessary to the claimed invention, this opinion has been established on the basis of:

a type of material

☐ a sequence listing

☐ table(s) related to the sequence listing

b format of material

☐ on paper

☐ in electronic form

c time of filing/furnishing

☐ contained in the international application as filed

☐ filed together with the international application in electronic form

☐ furnished subsequently to this Authority for the purposes of search.

3. ☐ In addition, in the case that more than one version or copy of a sequence listing and/or table(s) relating thereto has been filed or furnished, the required statements that the information in the subsequent or additional copies is identical to that in the application as filed or does not go beyond the application as filed, as appropriate, were furnished

4. Additional comments:

WRITTEN OPINION OF THE INTERNATIONAL SEARCHING AUTHORITY

International application No
PCT/IL06/00281

Box No. V Reasoned statement under Rule 43 *bis*.1(a)(i) with regard to novelty, inventive step or industrial applicability; citations and explanations supporting such statement

1. Statement

Novelty (N)	Claims	NONE	YES
	Claims	1-12	NO
Inventive step (IS)	Claims	NONE	YES
	Claims	1-12	NO
Industrial applicability (IA)	Claims	1-12	YES
	Claims	NONE	NO

2. Citations and explanations:

Claims 1-12 lacks novelty under PCT Article 33(2) as being anticipated by Bimber et al (US 2003/0085866 A1).

Bimber et al teaches a system to enable appearance comparison, the system comprising at least one interactive imaging and display station, the station comprising: a mirror-display device capable of selectably operating in either or both a mirror mode or a display mode; an imaging device to capture one or more appearances from a field-of-view in front of said mirror-display device; and an image control unit to select the mode of operation of said mirror-display device according to a user command (Figures 1-23; Paragraph 0063-0137)

Bimber et al teaches a method to enable appearance comparison, the method comprising: using a mirror mode of operation of a mirror,display device capable of being selectably operated in either a mirror mode or a display mode; capturing an image corresponding to an appearance of a first trial from a field-of-view in front of said mirror-display device; storing said image; selecting the display mode of operation of said mirror-display device; retrieving said image and displaying the image on said mirror-display device (Figures 1-23; Paragraph 0063-0137)

Electronic Acknowledgement Receipt

EFS ID:	17551658
Application Number:	13843001
International Application Number:	
Confirmation Number:	2550
Title of Invention:	DEVICES, SYSTEMS AND METHODS OF CAPTURING AND DISPLAYING APPEARANCES
First Named Inventor/Applicant Name:	Nissi Vilcovsky
Customer Number:	46188
Filer:	Joseph Bach/Monica Moreno
Filer Authorized By:	Joseph Bach
Attorney Docket Number:	067055-002000
Receipt Date:	03-DEC-2013
Filing Date:	15-MAR-2013
Time Stamp:	14:23:30
Application Type:	Utility under 35 USC 111(a)

Payment information:

Submitted with Payment	no

File Listing:

Document Number	Document Description	File Name	File Size(Bytes)/ Message Digest	Multi Part /.zip	Pages (if appl.)
1	Information Disclosure Statement (IDS) Form (SB08)	updated_IDS.pdf	613328 0f8fa24e45b1e0e3eba8f01b29e1f2712396e105	no	6

Warnings:

Information:

2	Foreign Reference	DE10031965.pdf	345554 e9bf9a4381b588b52ea1ba831cbdcfb96df822e0	no	5
Warnings:					
Information:					
3	Foreign Reference	DE19943355.pdf	1011560 2fdcc887ed4006f5179c6c5779e58f40d01e315e	no	11
Warnings:					
Information:					
4	Foreign Reference	EP1372092.pdf	411470 9b07e12c4f7299e5058bbd0bc12c08c6ddb063e9	no	9
Warnings:					
Information:					
5	Foreign Reference	EP1376207.pdf	1625966 7205b001a890bc649a6a29b144b5c9b99c242f97	no	30
Warnings:					
Information:					
6	Foreign Reference	WO0022955.pdf	1124838 45eab7bb554d5cac6cfb87877cb8958e646a34fb	no	30
Warnings:					
Information:					
7	Non Patent Literature	EP_Search_Report.pdf	299964 3fdb060f8e27339a11c7d1d259029e213f2b9ef6	no	8
Warnings:					
Information:					
8	Non Patent Literature	EP_Exam_Report.pdf	79034 1aa5f4128309d7cae63bfe419cbab14c097ae8d2	no	3
Warnings:					
Information:					
9	Non Patent Literature	EP_Exam_Report2.pdf	161491 64766b7310fd0356347fdb7163bdb52a480597a6	no	5
Warnings:					
Information:					
10	Non Patent Literature	ISR_PCTIL0600281.pdf	394126 a167e0ec9960005e13309bd08b09f0e59d5b6785	no	7
Warnings:					
Information:					

11	Non Patent Literature	IPRP_PCTIL2006000281.pdf	223921 d3026e72acae9e290d35440f781167256bd0d1ad	no	5
Warnings:					
Information:					
12	Non Patent Literature	OA_13088369_dated_11_02_2012.pdf	235829 40844552bb34b147dc4006336142295b92d6910c	no	7
Warnings:					
Information:					
13	Non Patent Literature	OA_13088369_dated_04_09_2013.pdf	217538 faf818a7103f0061543f16cc0ef904521b7cef7c	no	6
Warnings:					
Information:					
14	Non Patent Literature	NOA_13088369_dated_09_03_2013.pdf	406254 5e56a01977f2925d1a0bcbd8388ee4b4e45253f0	no	8
Warnings:					
Information:					
15	Non Patent Literature	OA_11817411_dated_07_21_2010.pdf	215508 d1def5cf12c7aaf8eb3487ddd19e3d845f5dfda4	no	7
Warnings:					
Information:					
16	Non Patent Literature	NOA_11817411_dated_02_03_2011.pdf	330446 065170498b3744ad57d2b4f3410a87df94590b8f	no	7
Warnings:					
Information:					
			Total Files Size (in bytes):	7696827	

This Acknowledgement Receipt evidences receipt on the noted date by the USPTO of the indicated documents, characterized by the applicant, and including page counts, where applicable. It serves as evidence of receipt similar to a Post Card, as described in MPEP 503.

New Applications Under 35 U.S.C. 111
If a new application is being filed and the application includes the necessary components for a filing date (see 37 CFR 1.53(b)-(d) and MPEP 506), a Filing Receipt (37 CFR 1.54) will be issued in due course and the date shown on this Acknowledgement Receipt will establish the filing date of the application.

National Stage of an International Application under 35 U.S.C. 371
If a timely submission to enter the national stage of an international application is compliant with the conditions of 35 U.S.C. 371 and other applicable requirements a Form PCT/DO/EO/903 indicating acceptance of the application as a national stage submission under 35 U.S.C. 371 will be issued in addition to the Filing Receipt, in due course.

New International Application Filed with the USPTO as a Receiving Office
If a new international application is being filed and the international application includes the necessary components for an international filing date (see PCT Article 11 and MPEP 1810), a Notification of the International Application Number and of the International Filing Date (Form PCT/RO/105) will be issued in due course, subject to prescriptions concerning national security, and the date shown on this Acknowledgement Receipt will establish the international filing date of the application.

PATENT APPLICATION

IN THE UNITED STATES PATENT AND TRADEMARK OFFICE

In re application of	Docket No: 067055-002000
Nissi Vilcovsky, et al.	Confirmation No.: 2550
Appln. No.: 13/843,001	Group Art Unit: 2656
Filed: March 15, 2013	Examiner: KUNTZ, CURTIS A.

For: DEVICES, SYSTEMS AND METHODS OF CAPTURING AND DISPLAYING APPEARANCES

PRELIMINARY AMENDMENT

Commissioner for Patents
P.O. Box 1450
Alexandria, VA 22313-1450

Sir:

Prior to the examination of the Subject Application, please amend the application as follows.

TABLE OF CONTENTS

AMENDMENTS TO THE DRAWINGS ……..…….2

REMARKS …….....3

AMENDMENTS TO THE DRAWINGS

Submitted herewith please find eighteen (18) sheets of replacement drawings for FIGs. 1-16 in compliance with 37 C.F.R. § 1.84. The Examiner is respectfully requested to acknowledge receipt of these drawings.

The submitted drawings are intended to replace the drawings previously submitted.

Attachment: Replacement Sheets: Eighteen (18) depicting FIGs. 1-16.

REMARKS

Entry and consideration of this Amendment is respectfully requested.

The USPTO is directed and authorized to charge all required fees, except for the Issue Fee and the Publication Fee, to Deposit Account No. 50-3557. Please also credit any overpayments to said Deposit Account.

Respectfully submitted,

/Joseph Bach/
Joseph Bach
Registration No. 37,771

Nixon Peabody LLP
P.O. Box 60610
Palo Alto, CA 94306
Tel. (650) 320-7700
Fax. (650) 320-7701

Date: July 20, 2014

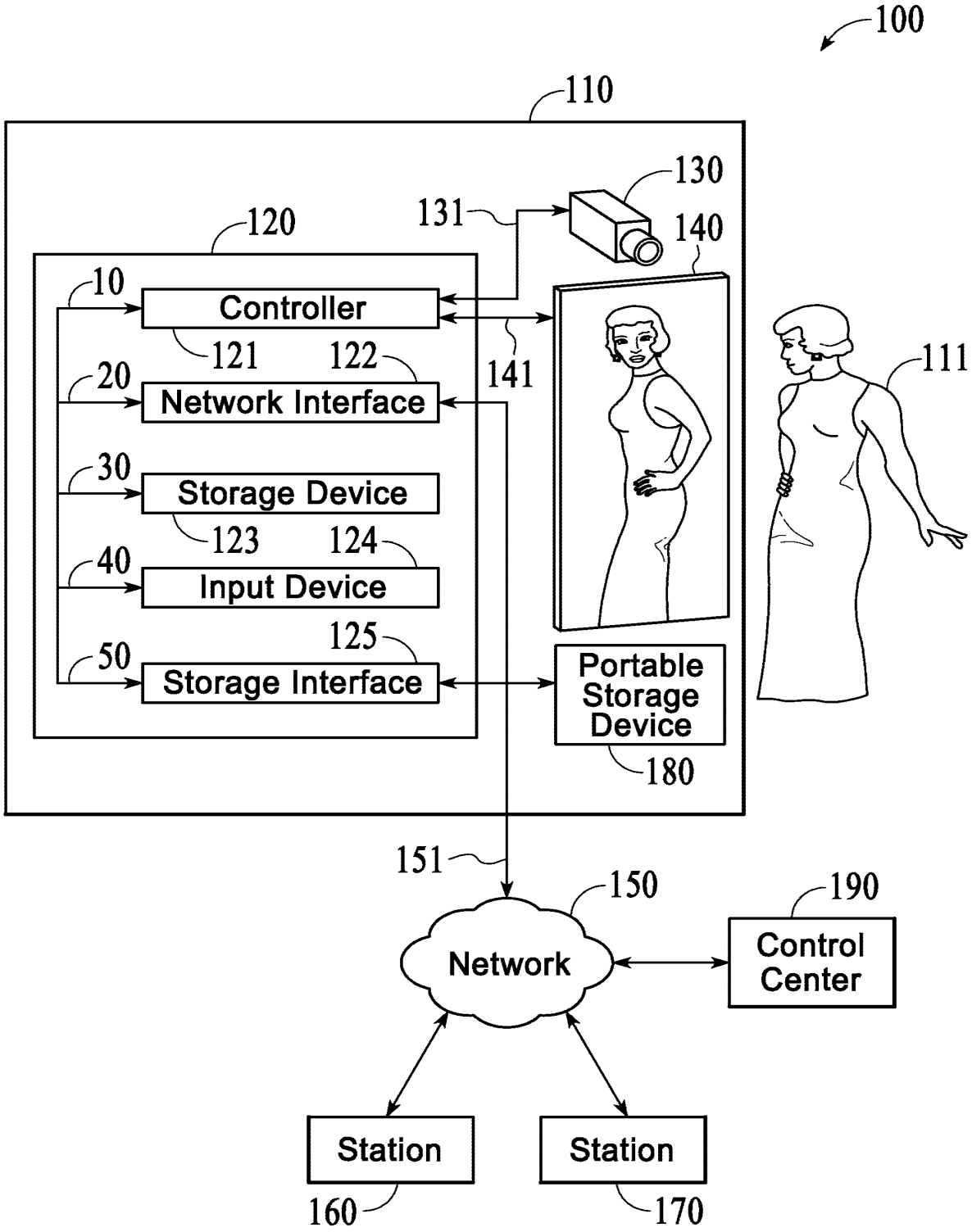
100
110
130
131
140
120
10
Controller
121
122
141
20
Network Interface
111
30
Storage Device
123
124
40
Input Device
125
50
Storage Interface
Portable Storage Device
180
151
150
190
Network
Control Center
Station
Station
160
170

FIG. 1

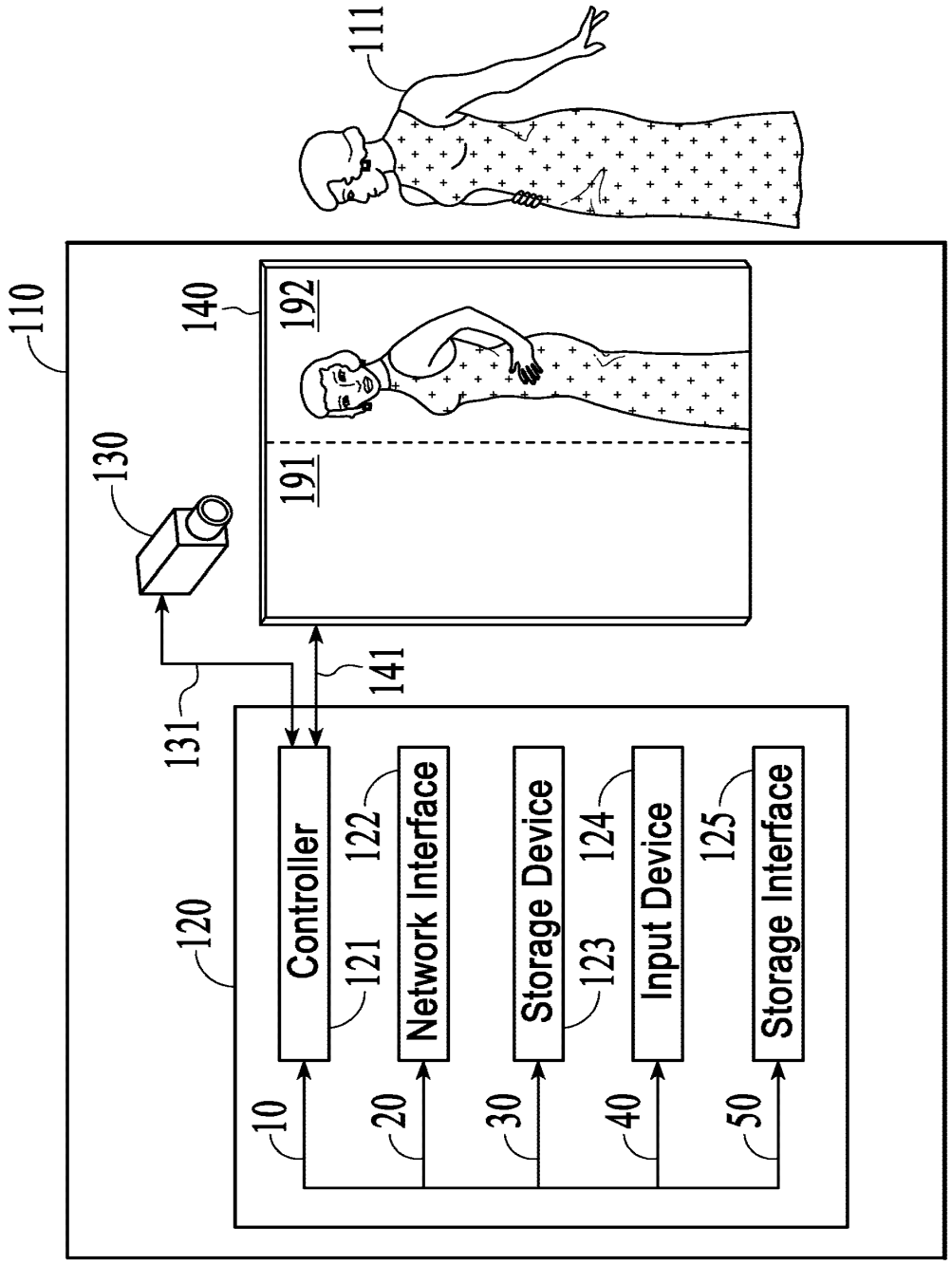
111
110
140
192
191
130
131
141
120
Controller
121
Network Interface
122
Storage Device
123
Input Device
124
Storage Interface
125
10
20
30
40
50

FIG. 2A

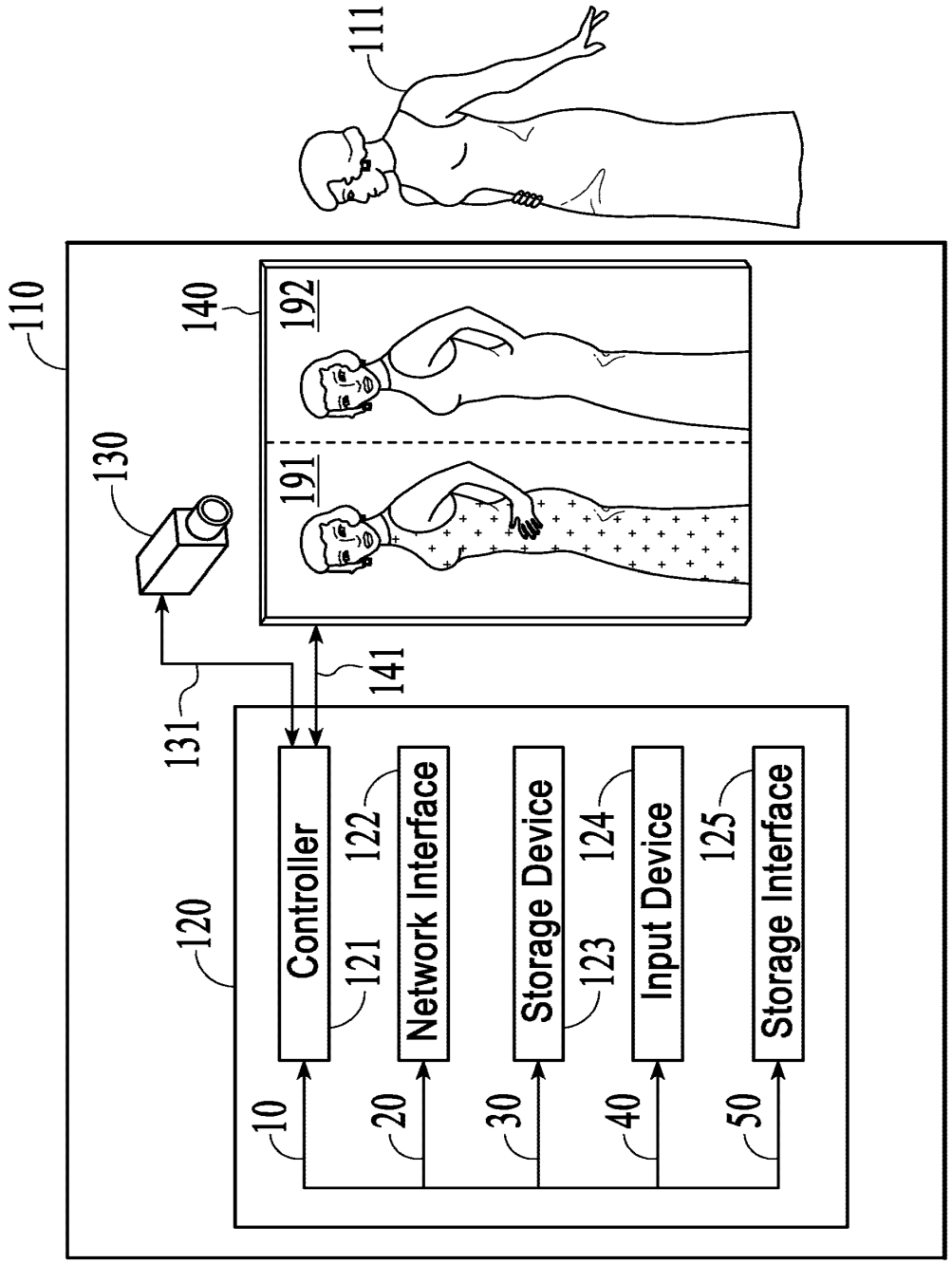
110
111
130
131
140
141
192
191
120
Controller
121
Network Interface
122
Storage Device
123
Input Device
124
Storage Interface
125
10
20
30
40
50

FIG. 2B

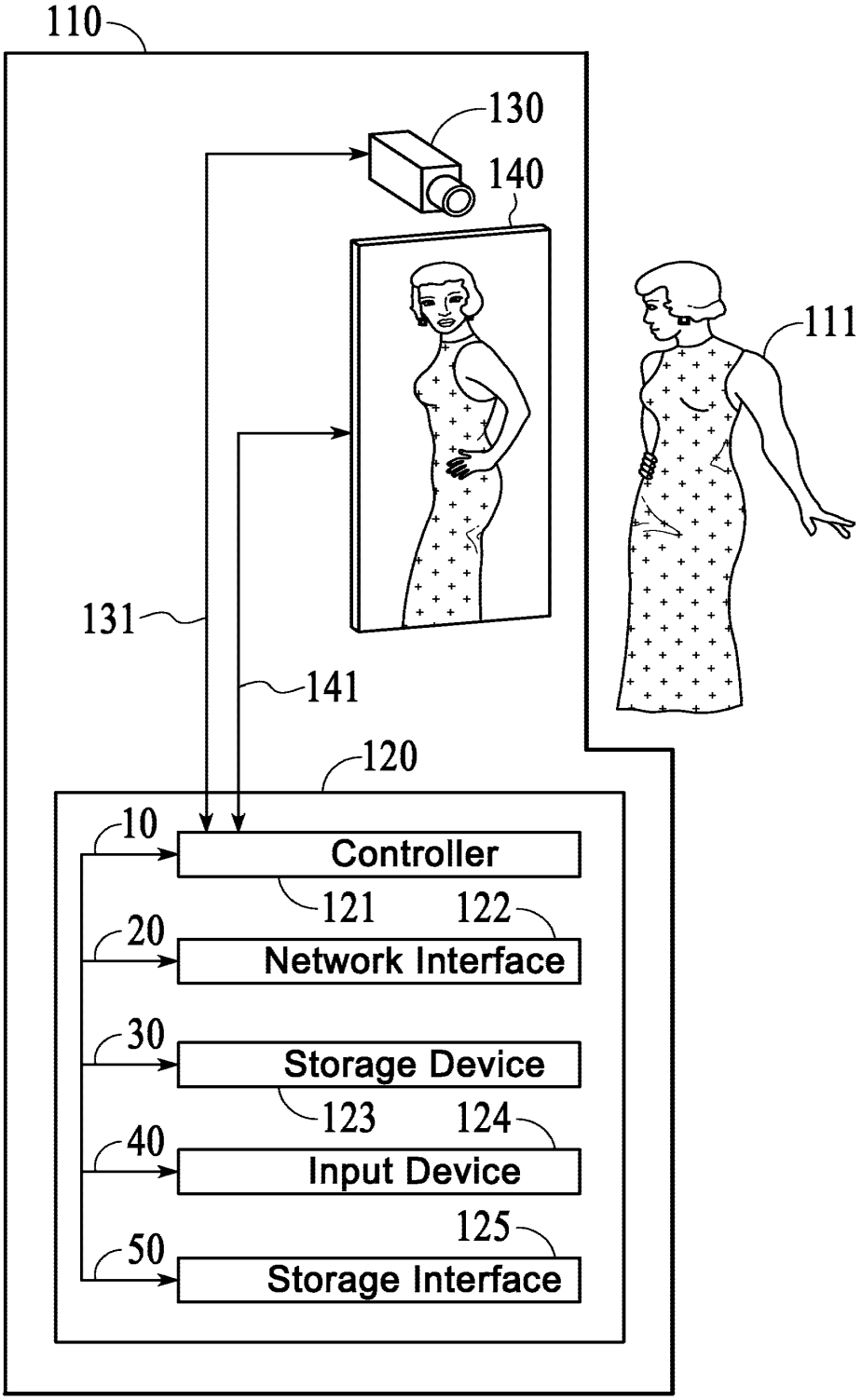
110
130
140
111
131
141
120
10
Controller
121
122
20
Network Interface
30
Storage Device
123
124
40
Input Device
125
50
Storage Interface

FIG. 3A

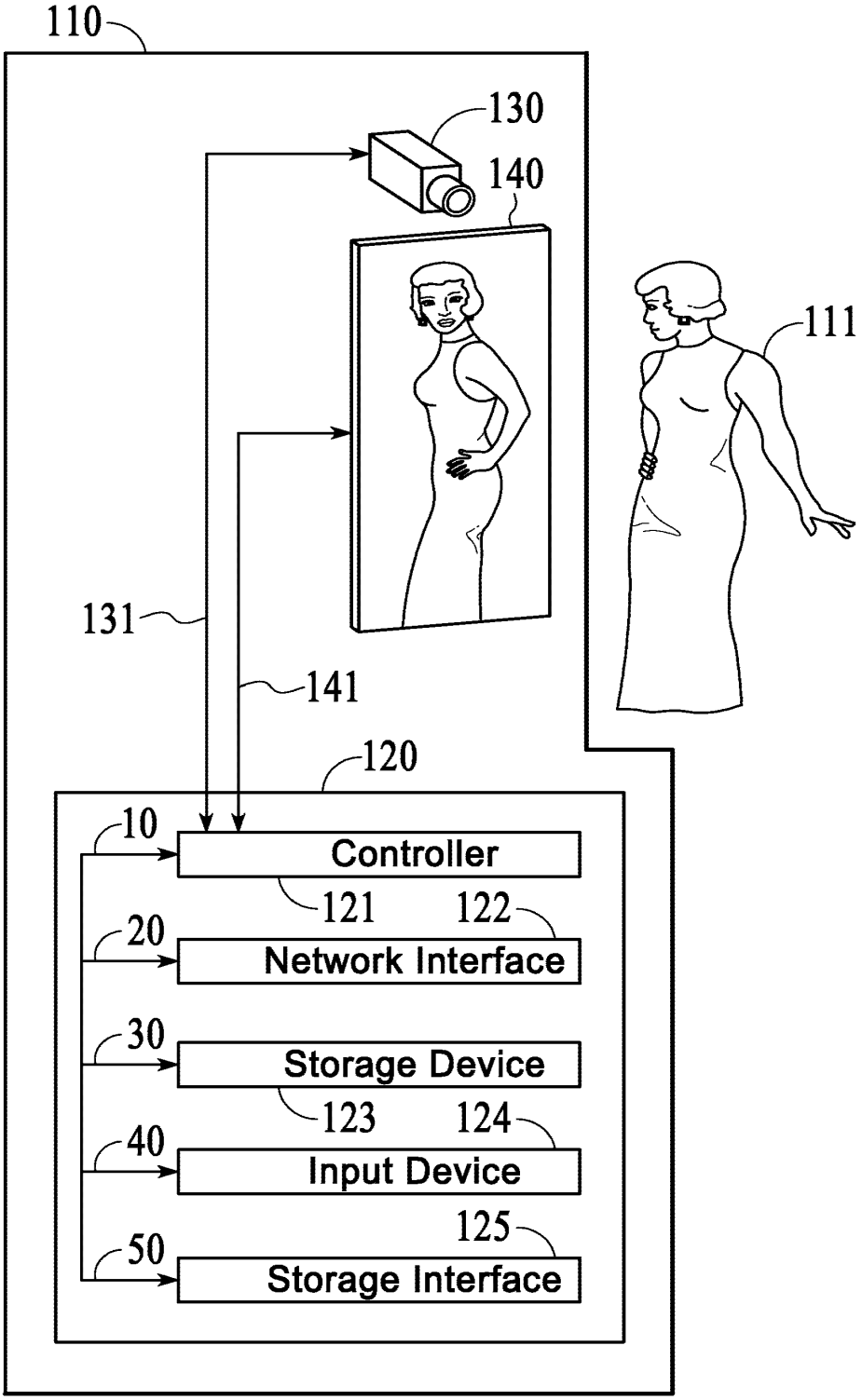
110
130
140
111
131
141
120
10
Controller
121
122
20
Network Interface
30
Storage Device
123
124
40
Input Device
125
50
Storage Interface

FIG. 3B

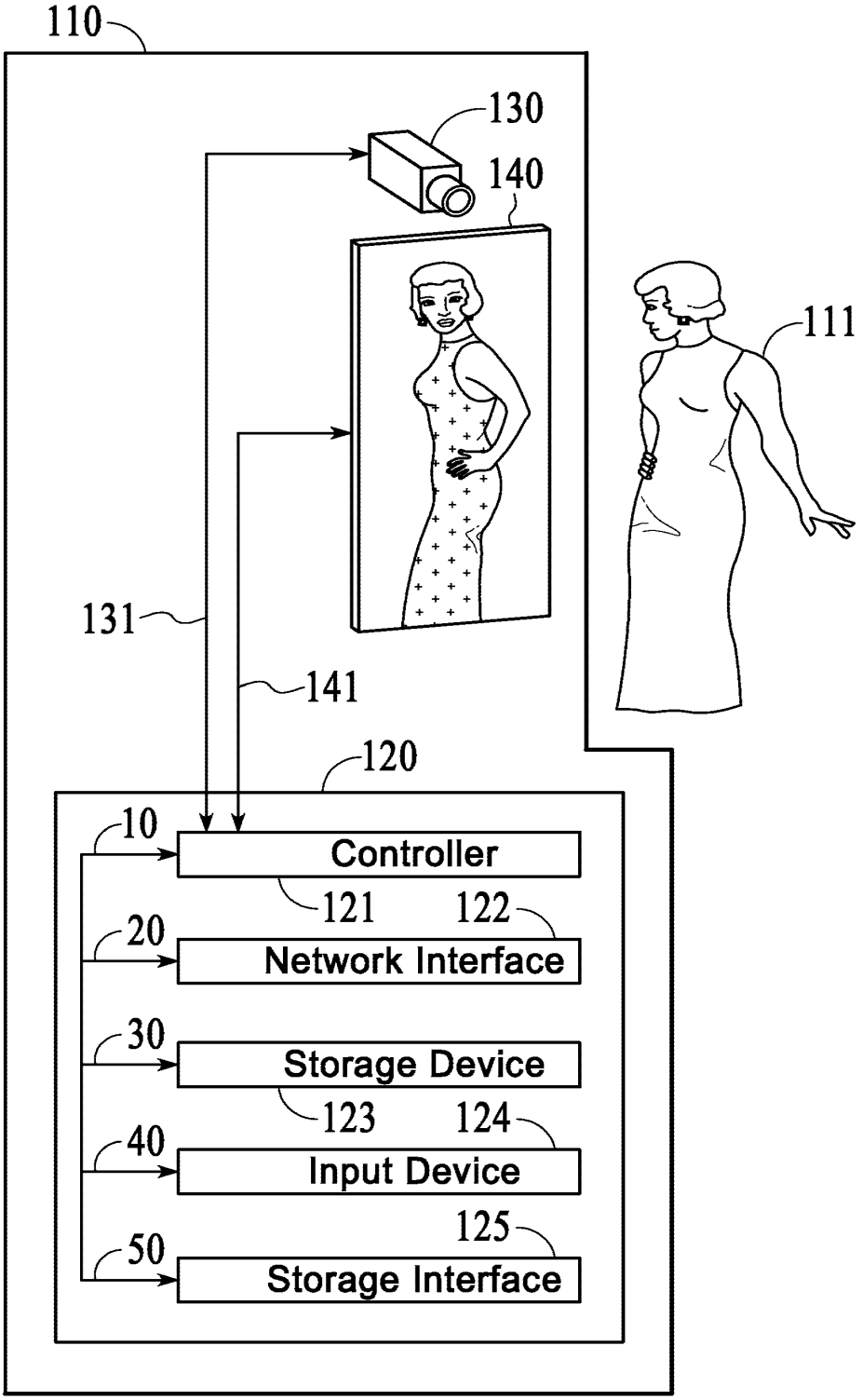
110
130
140
111
131
141
120
10
Controller
121
122
20
Network Interface
30
Storage Device
123
124
40
Input Device
125
50
Storage Interface

FIG. 3C

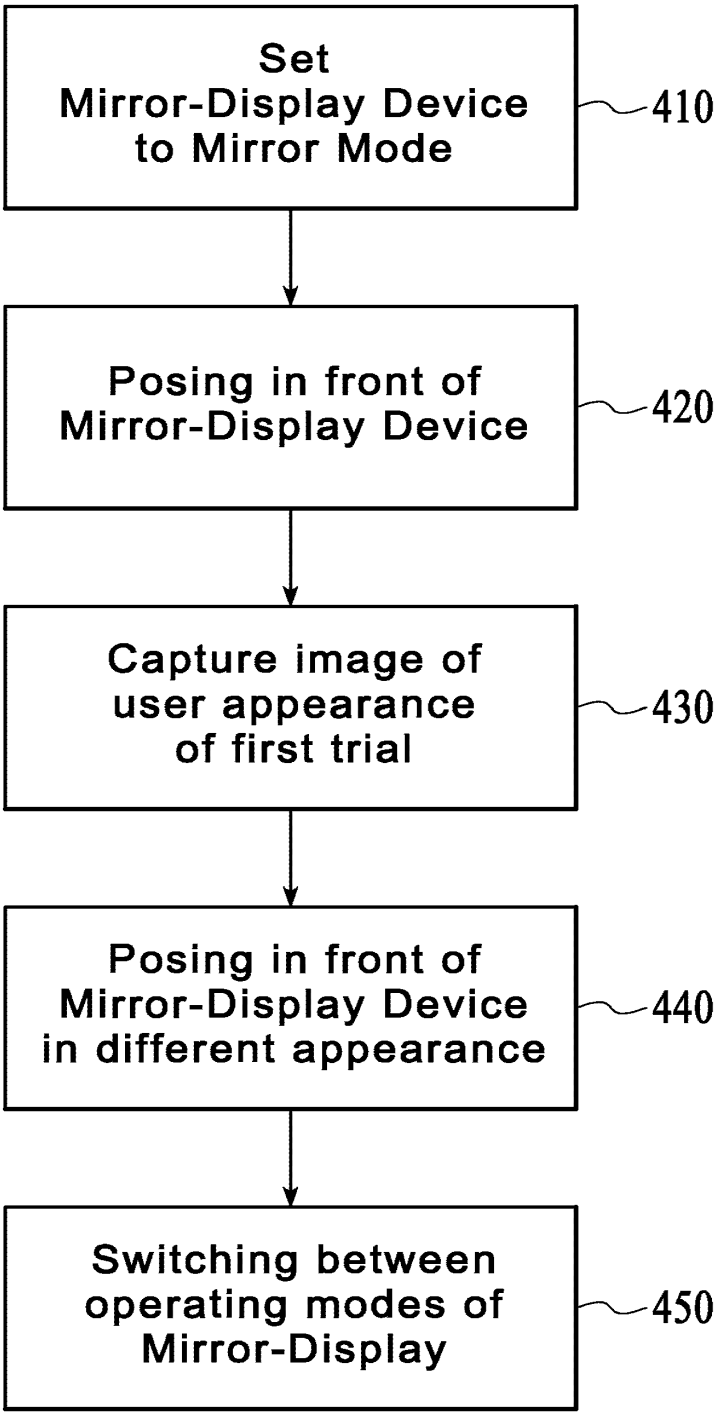
Set
Mirror-Display Device
to Mirror Mode
410
Posing in front of
Mirror-Display Device
420
Capture image of
user appearance
of first trial
430
Posing in front of
Mirror-Display Device
in different appearance
440
Switching between
operating modes of
Mirror-Display
450

FIG. 4

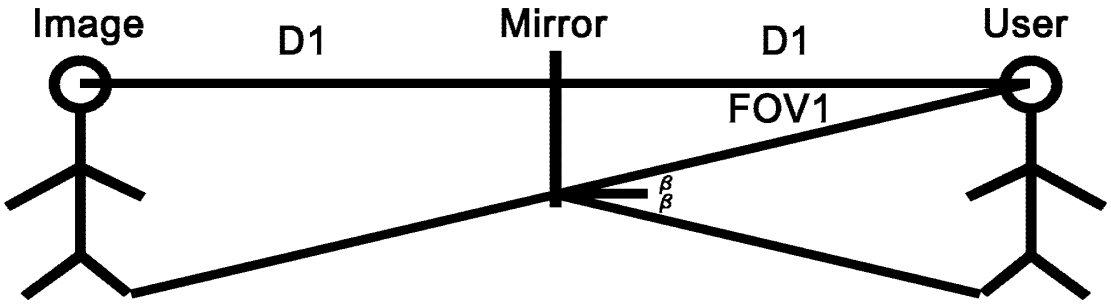
Image
D1
Mirror
D1
User
FOV1
β
β

FIG. 5A

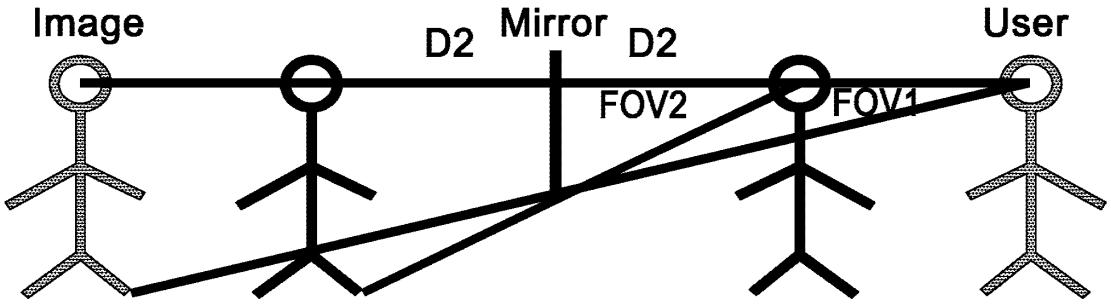
Image
D2
Mirror
D2
User
FOV2
FOV1

FIG. 5B

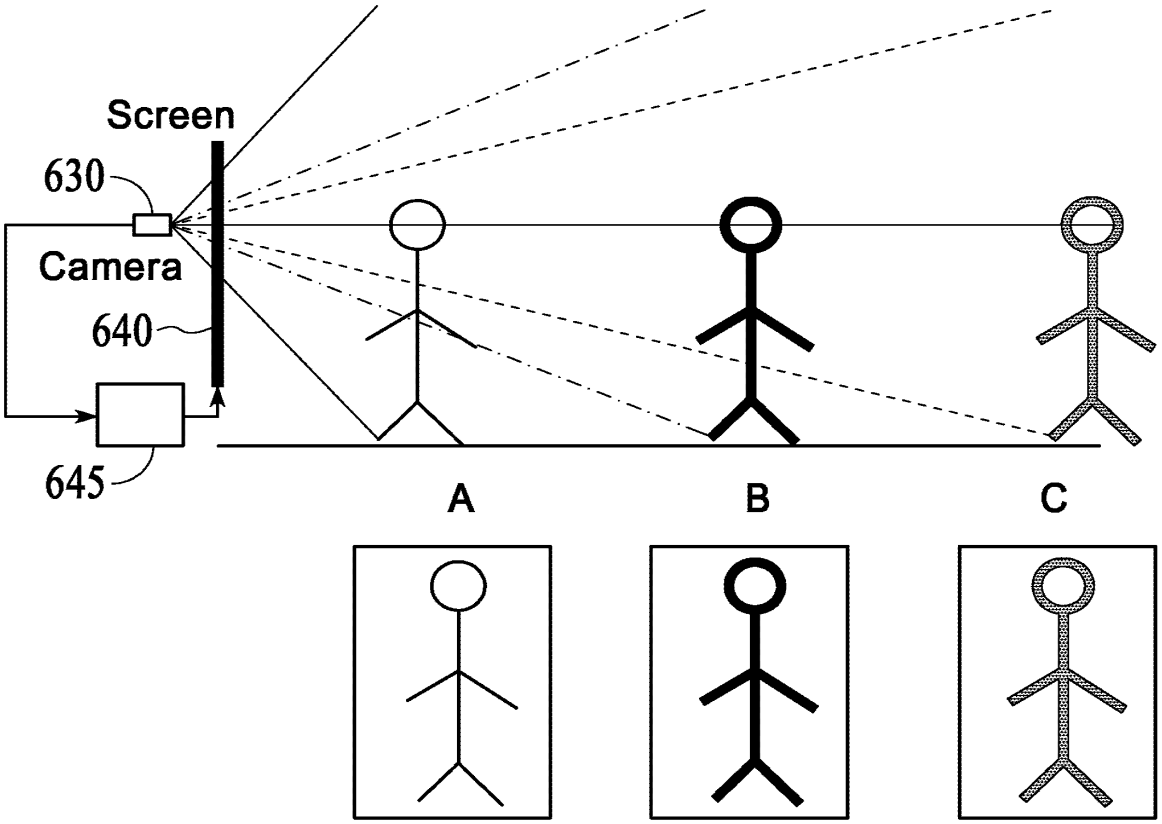

FIG. 6

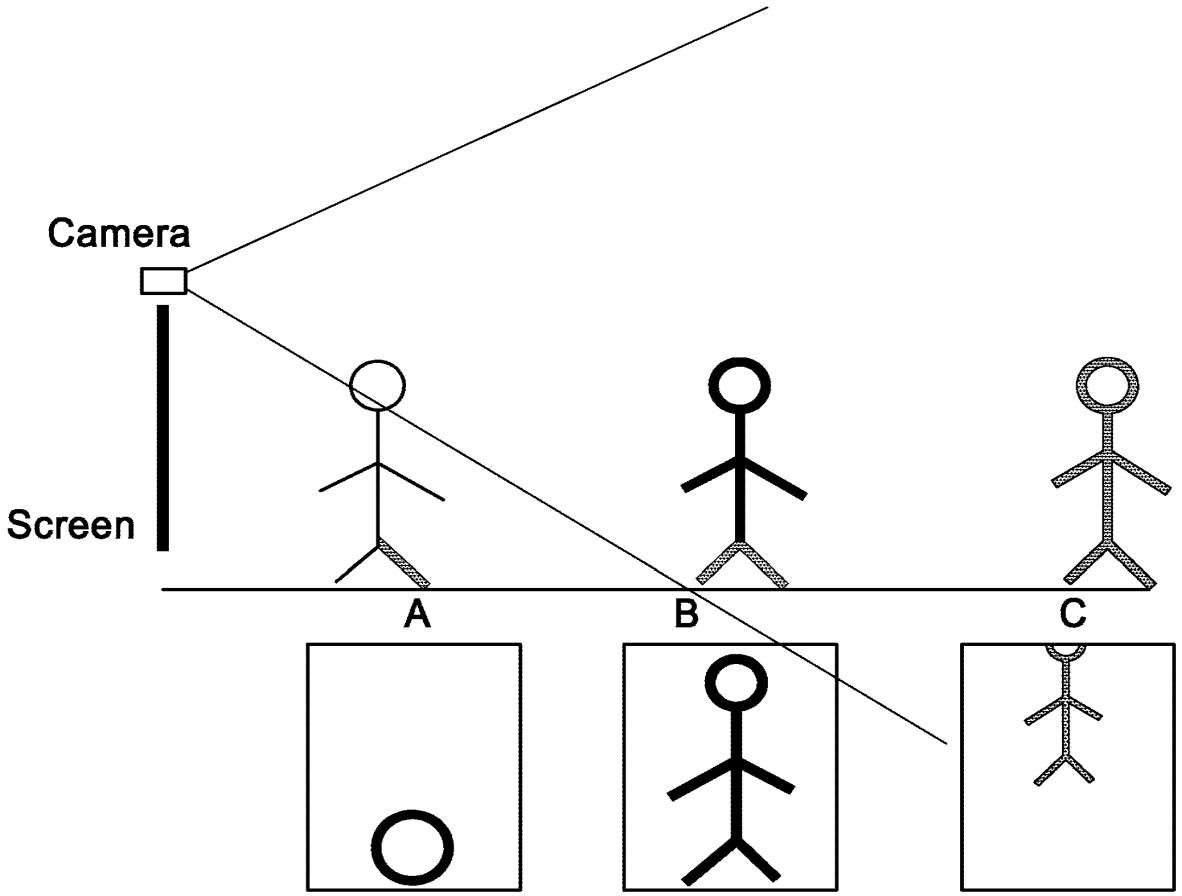

FIG. 7

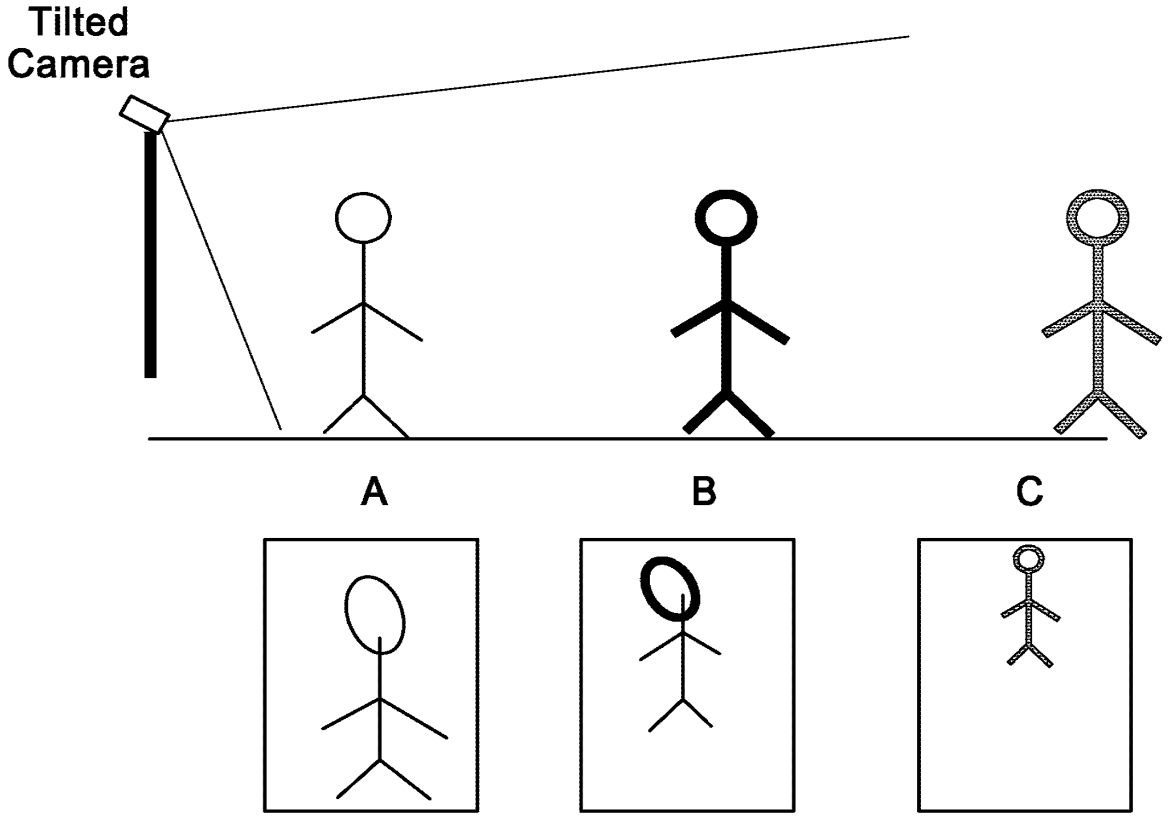

FIG. 8

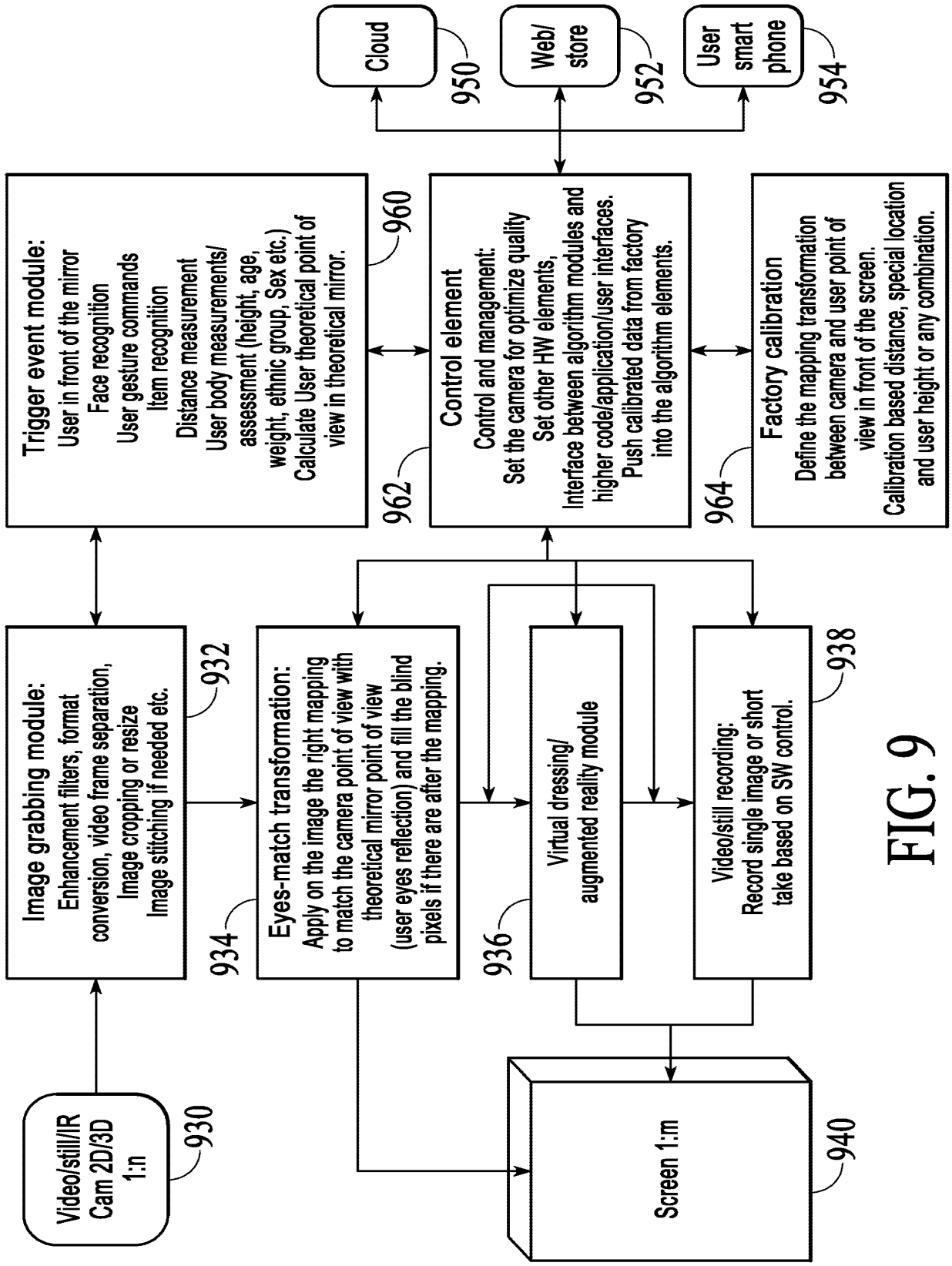
Cloud
950
Web/ store
952
User smart phone
954
Trigger event module:
User in front of the mirror
Face recognition
User gesture commands
Item recognition
Distance measurement
User body measurements/ assessment (height, age, weight, ethnic group, Sex etc.)
Calculate User theoretical point of view in theoretical mirror.
960
Control element
Control and management:
Set the camera for optimize quality
Set other HW elements,
Interface between algorithm modules and higher code/application/user interfaces.
Push calibrated data from factory into the algorithm elements.
962
Factory calibration
Define the mapping transformation between camera and user point of view in front of the screen.
Calibration based distance, special location and user height or any combination.
964
Image grabbing module:
Enhancement filters, format conversion, video frame separation,
Image cropping or resize
Image stitching if needed etc.
932
Eyes-match transformation:
Apply on the image the right mapping to match the camera point of view with theoretical mirror point of view (user eyes reflection) and fill the blind pixels if there are after the mapping.
934
Virtual dressing/ augmented reality module
936
Video/still recording:
Record single image or short take based on SW control.
938
Video/still/IR Cam 2D/3D 1:n
930
Screen 1:m
940

FIG. 9

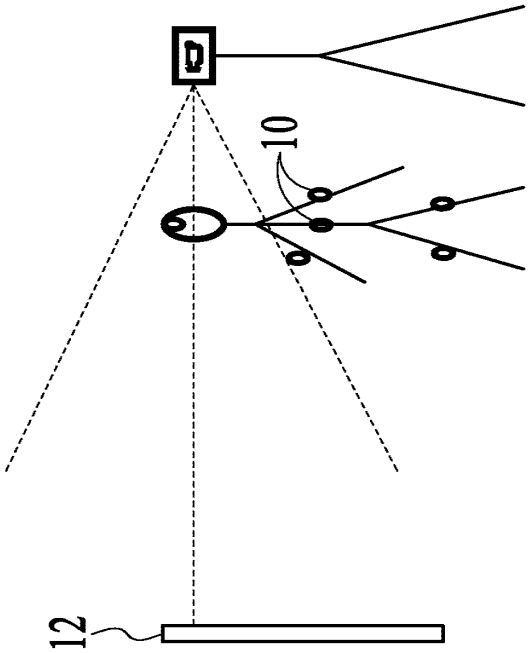

FIG. 10B

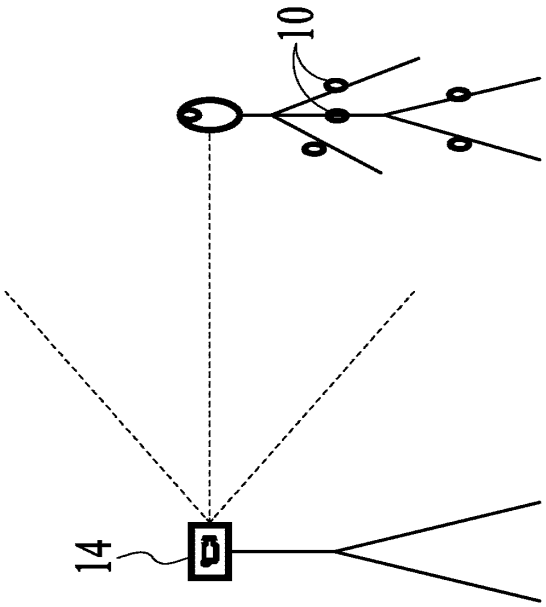

FIG. 10A

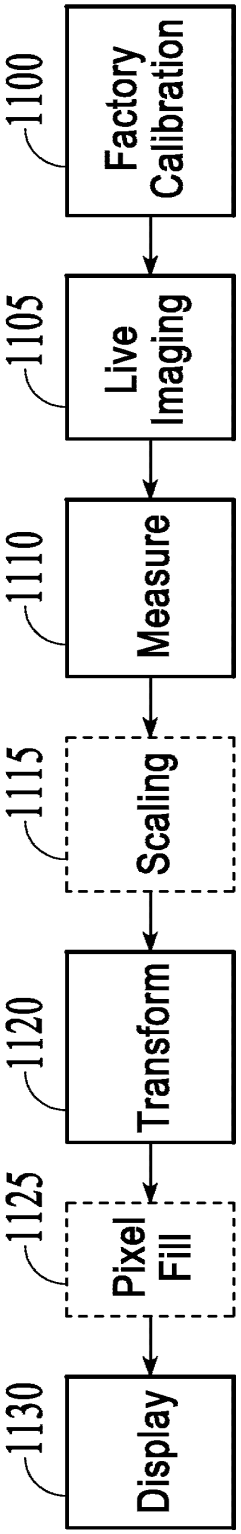

FIG. 11

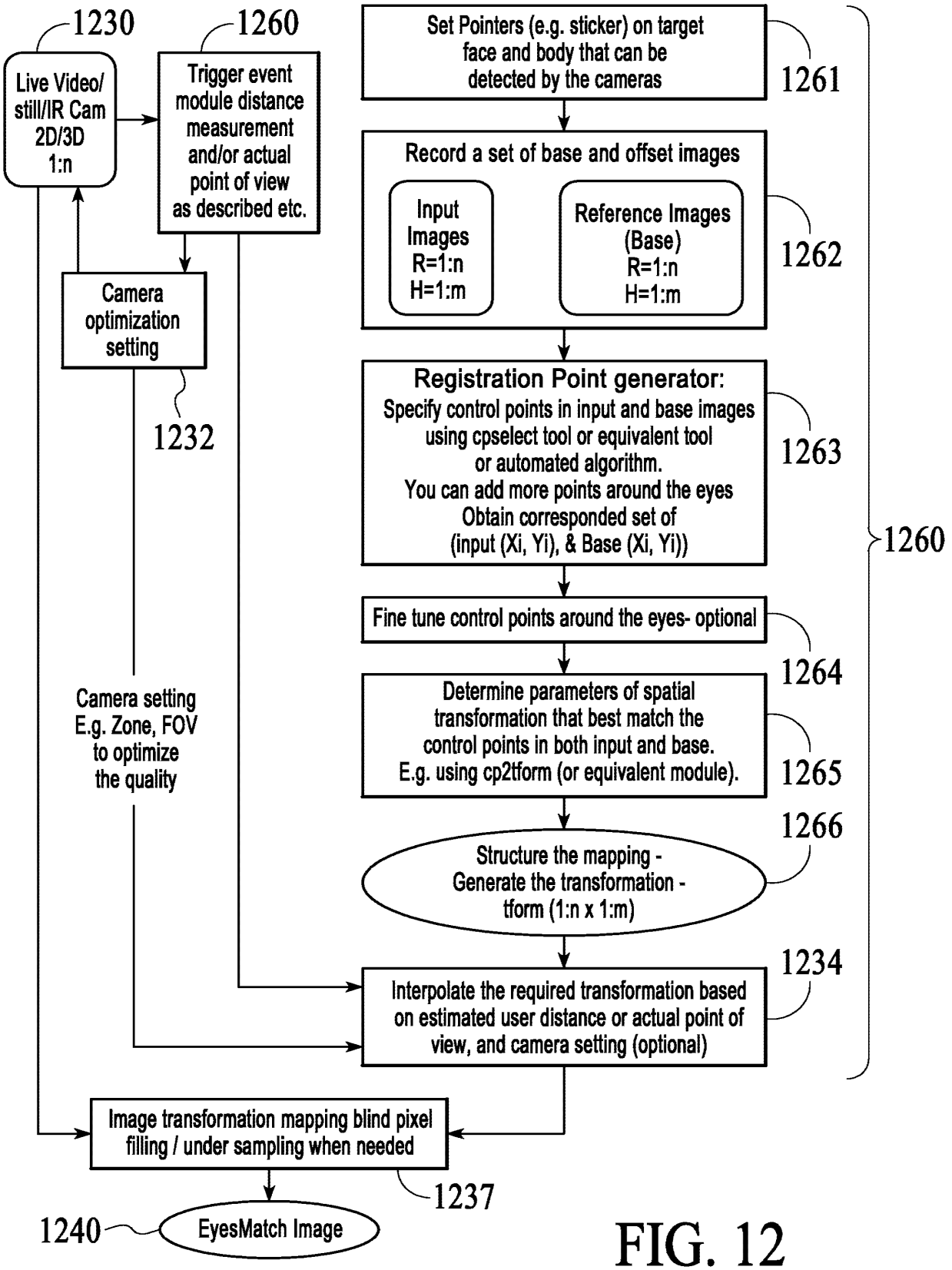
1230
Live Video/ still/IR Cam 2D/3D 1:n
1260
Trigger event module distance measurement and/or actual point of view as described etc.
Camera optimization setting
1232
Camera setting E.g. Zone, FOV to optimize the quality
Set Pointers (e.g. sticker) on target face and body that can be detected by the cameras
1261
Record a set of base and offset images
Input Images R=1:n H=1:m
Reference Images (Base) R=1:n H=1:m
1262
Registration Point generator:
Specify control points in input and base images using cpselect tool or equivalent tool or automated algorithm.
You can add more points around the eyes
Obtain corresponded set of (input (Xi, Yi), & Base (Xi, Yi))
1263
1260
Fine tune control points around the eyes- optional
1264
Determine parameters of spatial transformation that best match the control points in both input and base.
E.g. using cp2tform (or equivalent module).
1265
1266
Structure the mapping - Generate the transformation - tform (1:n x 1:m)
1234
Interpolate the required transformation based on estimated user distance or actual point of view, and camera setting (optional)
Image transformation mapping blind pixel filling / under sampling when needed
1237
1240
EyesMatch Image

FIG. 12

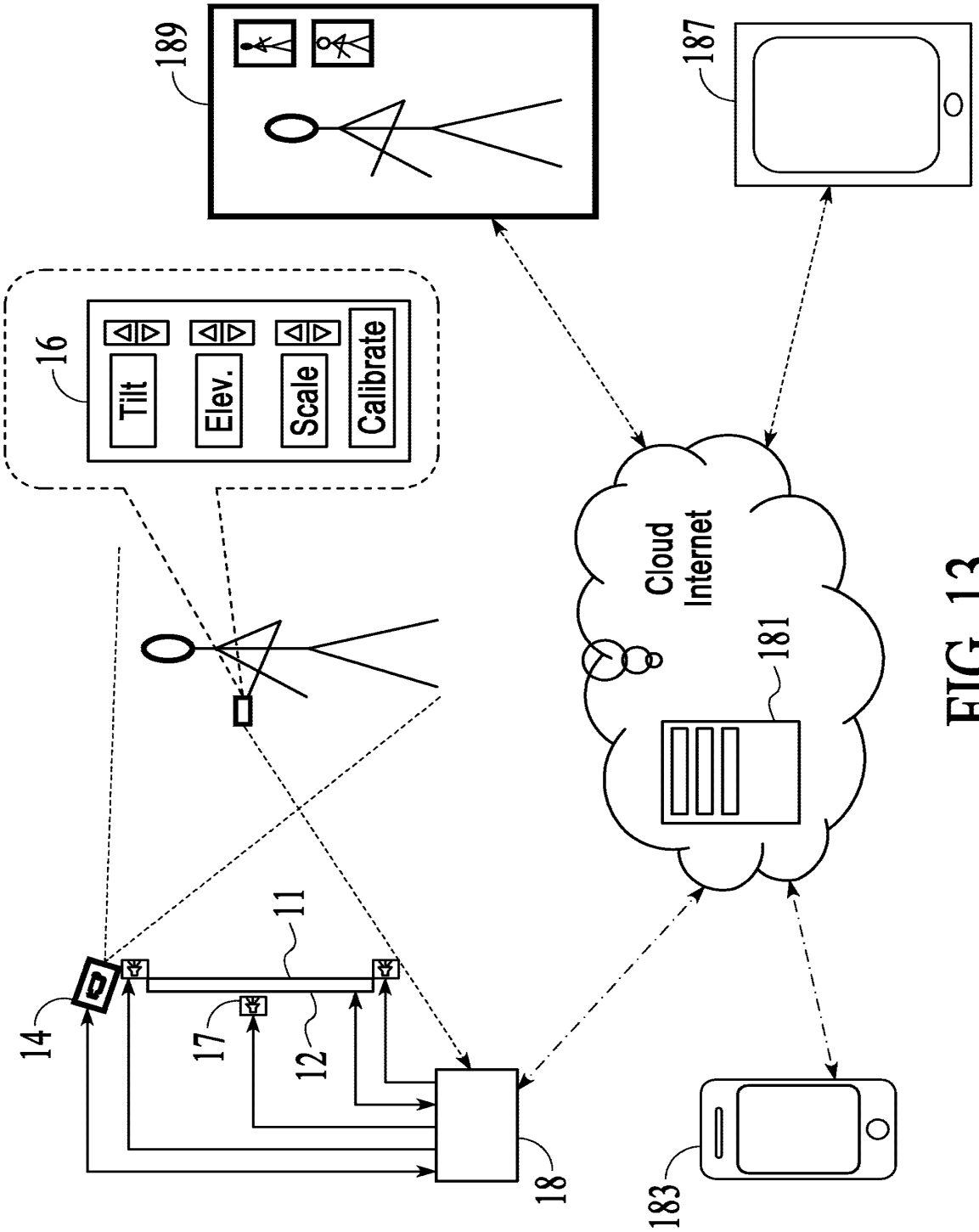
189
187
16
Tilt
Elev.
Scale
Calibrate
Cloud
Internet
181
11
14
17
12
18
183

FIG. 13

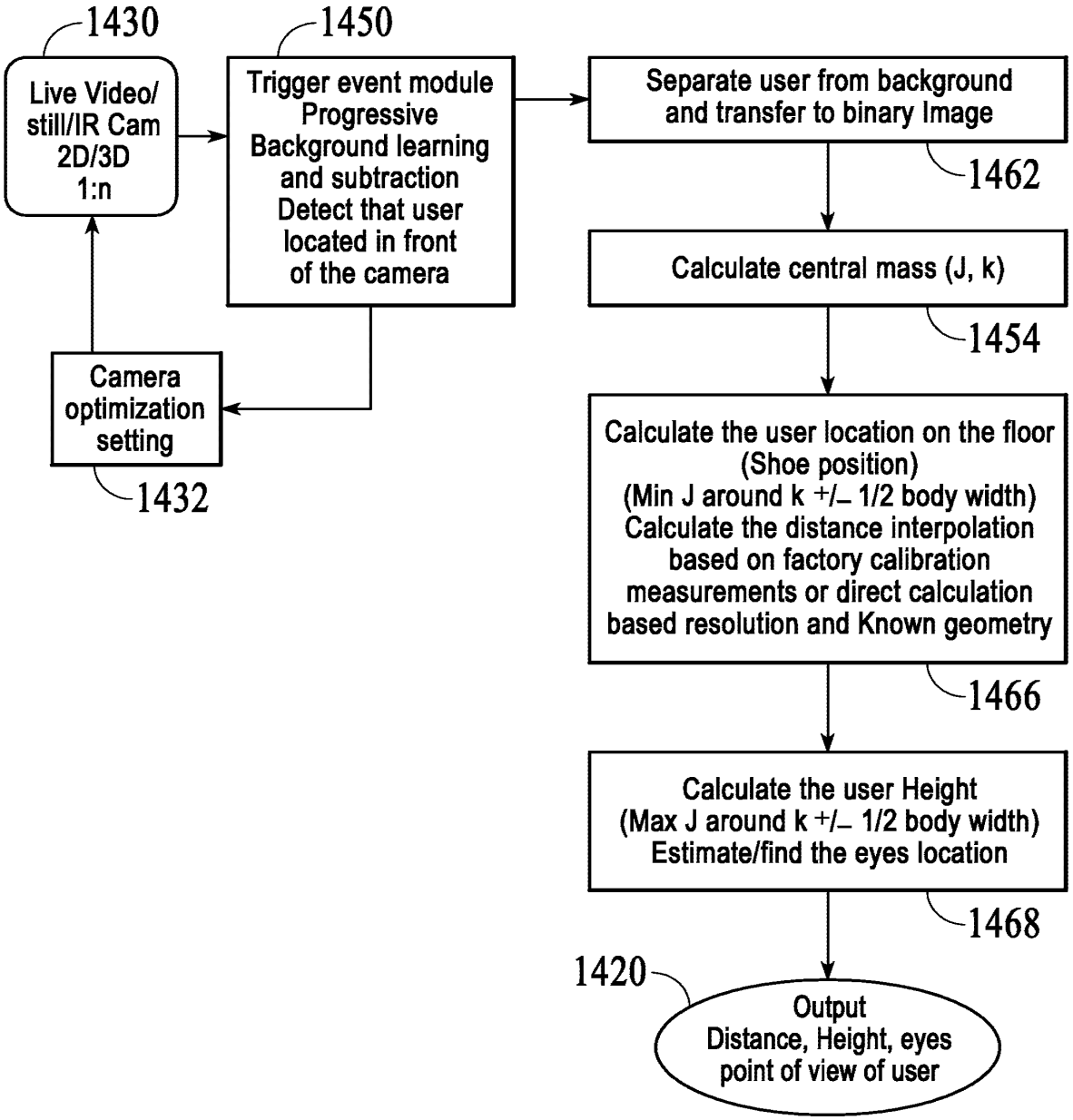
1430
Live Video/ still/IR Cam 2D/3D 1:n
1450
Trigger event module Progressive Background learning and subtraction Detect that user located in front of the camera
Separate user from background and transfer to binary Image
1462
Calculate central mass (J, k)
1454
Camera optimization setting
1432
Calculate the user location on the floor (Shoe position) (Min J around k +/– 1/2 body width) Calculate the distance interpolation based on factory calibration measurements or direct calculation based resolution and Known geometry
1466
Calculate the user Height (Max J around k +/– 1/2 body width) Estimate/find the eyes location
1468
1420
Output Distance, Height, eyes point of view of user

FIG. 14

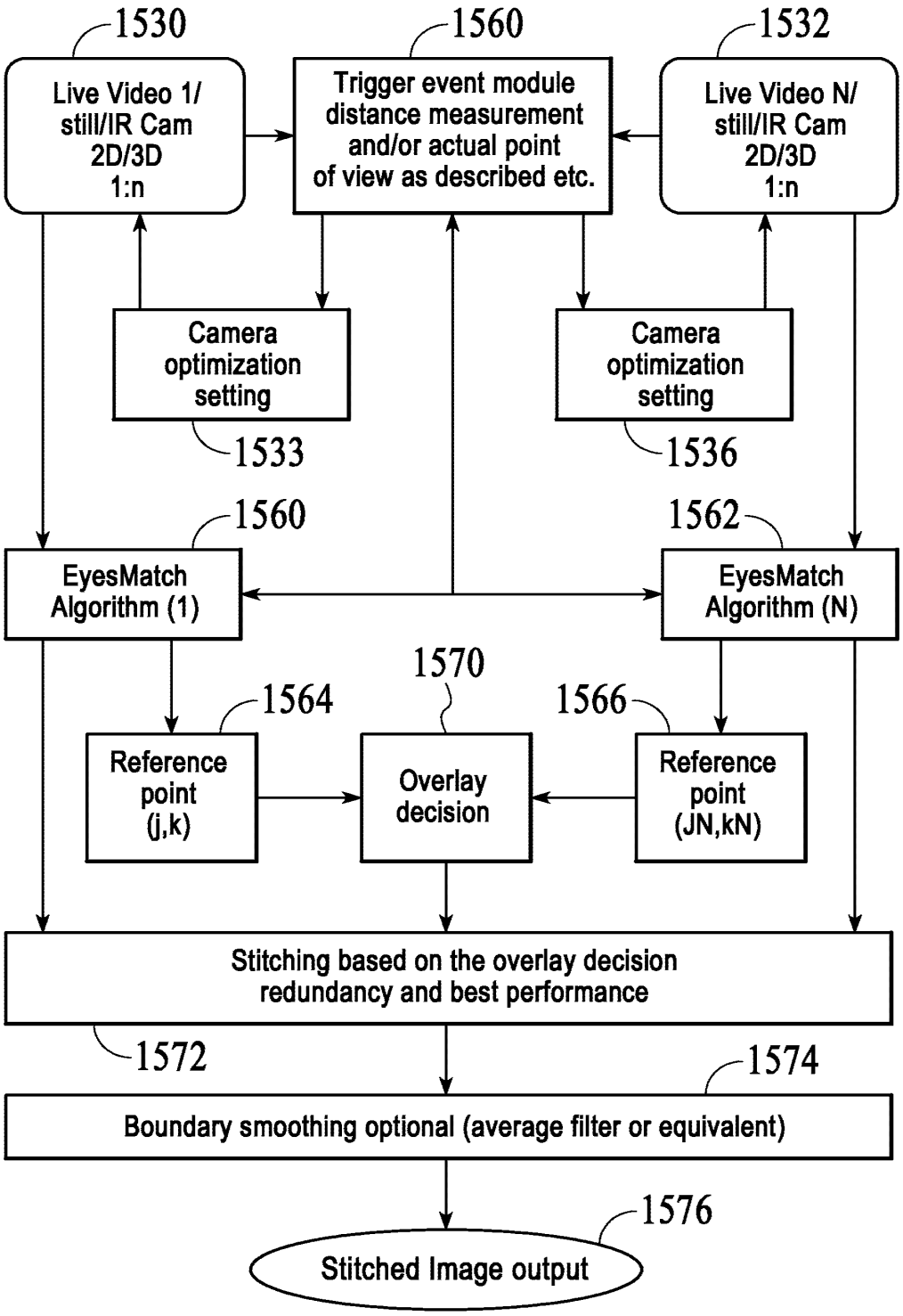
1530
Live Video 1/ still/IR Cam 2D/3D 1:n
1560
Trigger event module distance measurement and/or actual point of view as described etc.
1532
Live Video N/ still/IR Cam 2D/3D 1:n
Camera optimization setting
1533
Camera optimization setting
1536
1560
EyesMatch Algorithm (1)
1562
EyesMatch Algorithm (N)
1570
1564
Reference point (j,k)
Overlay decision
1566
Reference point (JN,kN)
Stitching based on the overlay decision redundancy and best performance
1572
1574
Boundary smoothing optional (average filter or equivalent)
1576
Stitched Image output

FIG. 15

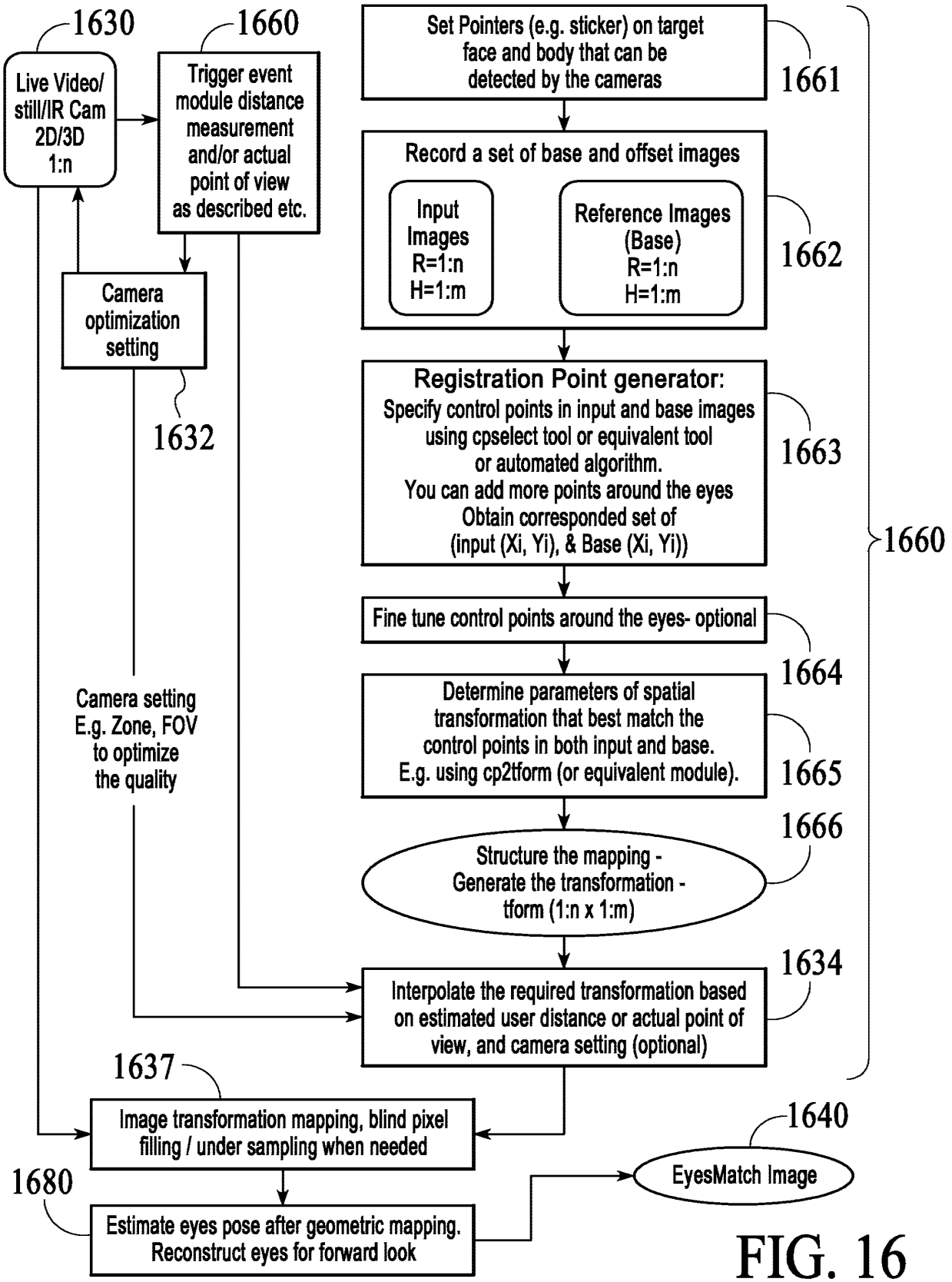
1630
Live Video/ still/IR Cam 2D/3D 1:n
1660
Trigger event module distance measurement and/or actual point of view as described etc.
Camera optimization setting
1632
Camera setting E.g. Zone, FOV to optimize the quality
Set Pointers (e.g. sticker) on target face and body that can be detected by the cameras
1661
Record a set of base and offset images
Input Images R=1:n H=1:m
Reference Images (Base) R=1:n H=1:m
1662
Registration Point generator:
Specify control points in input and base images using cpselect tool or equivalent tool or automated algorithm.
You can add more points around the eyes
Obtain corresponded set of (input (Xi, Yi), & Base (Xi, Yi))
1663
1660
Fine tune control points around the eyes- optional
1664
Determine parameters of spatial transformation that best match the control points in both input and base.
E.g. using cp2tform (or equivalent module).
1665
1666
Structure the mapping - Generate the transformation - tform (1:n x 1:m)
1634
Interpolate the required transformation based on estimated user distance or actual point of view, and camera setting (optional)
1637
Image transformation mapping, blind pixel filling / under sampling when needed
1640
EyesMatch Image
1680
Estimate eyes pose after geometric mapping. Reconstruct eyes for forward look

FIG. 16

Electronic Acknowledgement Receipt

EFS ID:	19627053
Application Number:	13843001
International Application Number:	
Confirmation Number:	2550
Title of Invention:	DEVICES, SYSTEMS AND METHODS OF CAPTURING AND DISPLAYING APPEARANCES
First Named Inventor/Applicant Name:	Nissi Vilcovsky
Customer Number:	46188
Filer:	Joseph Bach/Monica Moreno
Filer Authorized By:	Joseph Bach
Attorney Docket Number:	067055-002000
Receipt Date:	20-JUL-2014
Filing Date:	15-MAR-2013
Time Stamp:	18:42:25
Application Type:	Utility under 35 USC 111(a)

Payment information:

Submitted with Payment	no

File Listing:

Document Number	Document Description	File Name	File Size(Bytes)/ Message Digest	Multi Part /.zip	Pages (if appl.)
1		067055_002000_Preliminary_Amendment.pdf	81915 39514124af3b3535e2db3ebe3c1a6e8fe1307192	yes	3

	Multipart Description/PDF files in .zip description		
	Document Description	**Start**	**End**
	Preliminary Amendment	1	1
	Drawings-only black and white line drawings	2	2
	Applicant Arguments/Remarks Made in an Amendment	3	3

Warnings:

Information:

2	Drawings-only black and white line drawings	067055_Repl_Drawings.pdf	1452619 0ad507d502ab3a7162458ee05f8fd5109a92abd0	no	18

Warnings:

Information:

Total Files Size (in bytes):	1534534

This Acknowledgement Receipt evidences receipt on the noted date by the USPTO of the indicated documents, characterized by the applicant, and including page counts, where applicable. It serves as evidence of receipt similar to a Post Card, as described in MPEP 503.

<u>New Applications Under 35 U.S.C. 111</u>
If a new application is being filed and the application includes the necessary components for a filing date (see 37 CFR 1.53(b)-(d) and MPEP 506), a Filing Receipt (37 CFR 1.54) will be issued in due course and the date shown on this Acknowledgement Receipt will establish the filing date of the application.

<u>National Stage of an International Application under 35 U.S.C. 371</u>
If a timely submission to enter the national stage of an international application is compliant with the conditions of 35 U.S.C. 371 and other applicable requirements a Form PCT/DO/EO/903 indicating acceptance of the application as a national stage submission under 35 U.S.C. 371 will be issued in addition to the Filing Receipt, in due course.

<u>New International Application Filed with the USPTO as a Receiving Office</u>
If a new international application is being filed and the international application includes the necessary components for an international filing date (see PCT Article 11 and MPEP 1810), a Notification of the International Application Number and of the International Filing Date (Form PCT/RO/105) will be issued in due course, subject to prescriptions concerning national security, and the date shown on this Acknowledgement Receipt will establish the international filing date of the application.

PTO/SB/08a (01-10)
Approved for use through 07/31/2012. OMB 0651-0031
U.S. Patent and Trademark Office; U.S. DEPARTMENT OF COMMERCE
Under the Paperwork Reduction Act of 1995, no persons are required to respond to a collection of information unless it contains a valid OMB control number.

INFORMATION DISCLOSURE STATEMENT BY APPLICANT (Not for submission under 37 CFR 1.99)		
	Application Number	13843001
	Filing Date	2013-03-15
	First Named Inventor	Nissi Vilcovsky
	Art Unit	2653
	Examiner Name	PATEL, HEMANT SHANTILAL
	Attorney Docket Number	067055-002000

U.S.PATENTS						Remove
Examiner Initial*	Cite No	Patent Number	Kind Code[1]	Issue Date	Name of Patentee or Applicant of cited Document	Pages,Columns,Lines where Relevant Passages or Relevant Figures Appear
	1	6417850	B1	2002-07-09	Kang	
	2	8624883	B2	2014-01-07	Vilcosky	
If you wish to add additional U.S. Patent citation information please click the Add button.						Add

U.S.PATENT APPLICATION PUBLICATIONS						Remove
Examiner Initial*	Cite No	Publication Number	Kind Code[1]	Publication Date	Name of Patentee or Applicant of cited Document	Pages,Columns,Lines where Relevant Passages or Relevant Figures Appear
	1	20050047629	A1	2005-03-03	Farrell et al.	
	2	20050259158	A1	2005-11-24	Jacob et al.	
	3	20060007303	A1	2006-01-12	Milton	
	4	20070120954	A1	2007-05-31	Allen et al.	

INFORMATION DISCLOSURE STATEMENT BY APPLICANT (Not for submission under 37 CFR 1.99)	Application Number	13843001
	Filing Date	2013-03-15
	First Named Inventor	Nissi Vilcovsky
	Art Unit	2653
	Examiner Name	PATEL, HEMANT SHANTILAL
	Attorney Docket Number	067055-002000

	5	20070132863	A1	2007-06-14	Deguchi	
	6	20080151092	A1	2008-06-26	Vilcovsky	
	7	20090051779	A1	2009-02-26	Rolston	
	8	20100097442	A1	2010-04-22	Lablans	
	9	20100190510	A1	2010-07-29	Maranhas et al.	
	10	20100191578	A1	2010-07-29	Tran et al.	
	11	20110210970	A1	2011-09-01	Segawa	
	12	20120169850	A1	2012-07-05	Kim et al.	
	13	20120177284	A1	2012-07-12	Wang	
	14	20140225977	A1	2014-08-14	Vilcovsky et al.	
	15	20140225978	A1	2014-08-14	Saban et al.	

INFORMATION DISCLOSURE STATEMENT BY APPLICANT (Not for submission under 37 CFR 1.99)		
	Application Number	13843001
	Filing Date	2013-03-15
	First Named Inventor	Nissi Vilcovsky
	Art Unit	2653
	Examiner Name	PATEL, HEMANT SHANTILAL
	Attorney Docket Number	067055-002000

	16	20140226000	A1	2014-08-14	Vilcovsky et al.	
	17	20140226900	A1	2014-08-14	Saban et al.	

If you wish to add additional U.S. Published Application citation information please click the Add button. Add

FOREIGN PATENT DOCUMENTS Remove

Examiner Initial*	Cite No	Foreign Document Number[3]	Country Code[2] ¡	Kind Code[4]	Publication Date	Name of Patentee or Applicant of cited Document	Pages,Columns,Lines where Relevant Passages or Relevant Figures Appear	T[5]
	1	1859432	EP	A2	2007-11-28	Nissi Vilcovsky		☐
	2	2006/092793	WO	A2	2006-09-08	Nissi Vilcovsky		☐
	3	2014/100250	WO	A2	2014-06-26	Nissi Vilcovsky, et al.		☐

If you wish to add additional Foreign Patent Document citation information please click the Add button Add

NON-PATENT LITERATURE DOCUMENTS Remove

Examiner Initials*	Cite No	Include name of the author (in CAPITAL LETTERS), title of the article (when appropriate), title of the item (book, magazine, journal, serial, symposium, catalog, etc), date, pages(s), volume-issue number(s), publisher, city and/or country where published.	T[5]
	1	Decision to Refuse for European Patent Application No. 06711263.1 dated November 4, 2014.	☐
	2	International Search Report and Written Opinion for PCT/US2013/076253 dated May 6, 2014.	☐

INFORMATION DISCLOSURE STATEMENT BY APPLICANT (Not for submission under 37 CFR 1.99)		
	Application Number	13843001
	Filing Date	2013-03-15
	First Named Inventor	Nissi Vilcovsky
	Art Unit	2653
	Examiner Name	PATEL, HEMANT SHANTILAL
	Attorney Docket Number	067055-002000

	3	Notice of Allowance for U.S. Patent Application No. 14/253,800 dated October 24, 2014.	☐
	4	Invitation to Pay Additional Fees And, Where Applicable, Protest Fee for PCT/US2014/034333 dated August 8, 2014.	☐

If you wish to add additional non-patent literature document citation information please click the Add button Add

EXAMINER SIGNATURE

Examiner Signature		Date Considered	

*EXAMINER: Initial if reference considered, whether or not citation is in conformance with MPEP 609. Draw line through a citation if not in conformance and not considered. Include copy of this form with next communication to applicant.

[1] See Kind Codes of USPTO Patent Documents at www.USPTO.GOV or MPEP 901.04. [2] Enter office that issued the document, by the two-letter code (WIPO Standard ST.3). [3] For Japanese patent documents, the indication of the year of the reign of the Emperor must precede the serial number of the patent document. [4] Kind of document by the appropriate symbols as indicated on the document under WIPO Standard ST.16 if possible. [5] Applicant is to place a check mark here if English language translation is attached.

INFORMATION DISCLOSURE STATEMENT BY APPLICANT (Not for submission under 37 CFR 1.99)		
	Application Number	13843001
	Filing Date	2013-03-15
	First Named Inventor	Nissi Vilcovsky
	Art Unit	2653
	Examiner Name	PATEL, HEMANT SHANTILAL
	Attorney Docket Number	067055-002000

CERTIFICATION STATEMENT

Please see 37 CFR 1.97 and 1.98 to make the appropriate selection(s):

☐ That each item of information contained in the information disclosure statement was first cited in any communication from a foreign patent office in a counterpart foreign application not more than three months prior to the filing of the information disclosure statement. See 37 CFR 1.97(e)(1).

OR

☐ That no item of information contained in the information disclosure statement was cited in a communication from a foreign patent office in a counterpart foreign application, and, to the knowledge of the person signing the certification after making reasonable inquiry, no item of information contained in the information disclosure statement was known to any individual designated in 37 CFR 1.56(c) more than three months prior to the filing of the information disclosure statement. See 37 CFR 1.97(e)(2).

☐ See attached certification statement.

☐ The fee set forth in 37 CFR 1.17 (p) has been submitted herewith.

☒ A certification statement is not submitted herewith.

SIGNATURE

A signature of the applicant or representative is required in accordance with CFR 1.33, 10.18. Please see CFR 1.4(d) for the form of the signature.

Signature	/Joseph Bach/	Date (YYYY-MM-DD)	2014-11-06
Name/Print	Joseph Bach	Registration Number	37,771

This collection of information is required by 37 CFR 1.97 and 1.98. The information is required to obtain or retain a benefit by the public which is to file (and by the USPTO to process) an application. Confidentiality is governed by 35 U.S.C. 122 and 37 CFR 1.14. This collection is estimated to take 1 hour to complete, including gathering, preparing and submitting the completed application form to the USPTO. Time will vary depending upon the individual case. Any comments on the amount of time you require to complete this form and/or suggestions for reducing this burden, should be sent to the Chief Information Officer, U.S. Patent and Trademark Office, U.S. Department of Commerce, P.O. Box 1450, Alexandria, VA 22313-1450. DO NOT SEND FEES OR COMPLETED FORMS TO THIS ADDRESS. **SEND TO: Commissioner for Patents, P.O. Box 1450, Alexandria, VA 22313-1450.**

Privacy Act Statement

The Privacy Act of 1974 (P.L. 93-579) requires that you be given certain information in connection with your submission of the attached form related to a patent application or patent. Accordingly, pursuant to the requirements of the Act, please be advised that: (1) the general authority for the collection of this information is 35 U.S.C. 2(b)(2); (2) furnishing of the information solicited is voluntary; and (3) the principal purpose for which the information is used by the U.S. Patent and Trademark Office is to process and/or examine your submission related to a patent application or patent. If you do not furnish the requested information, the U.S. Patent and Trademark Office may not be able to process and/or examine your submission, which may result in termination of proceedings or abandonment of the application or expiration of the patent.

The information provided by you in this form will be subject to the following routine uses:

1. The information on this form will be treated confidentially to the extent allowed under the Freedom of Information Act (5 U.S.C. 552) and the Privacy Act (5 U.S.C. 552a). Records from this system of records may be disclosed to the Department of Justice to determine whether the Freedom of Information Act requires disclosure of these record s.

2. A record from this system of records may be disclosed, as a routine use, in the course of presenting evidence to a court, magistrate, or administrative tribunal, including disclosures to opposing counsel in the course of settlement negotiations.

3. A record in this system of records may be disclosed, as a routine use, to a Member of Congress submitting a request involving an individual, to whom the record pertains, when the individual has requested assistance from the Member with respect to the subject matter of the record.

4. A record in this system of records may be disclosed, as a routine use, to a contractor of the Agency having need for the information in order to perform a contract. Recipients of information shall be required to comply with the requirements of the Privacy Act of 1974, as amended, pursuant to 5 U.S.C. 552a(m).

5. A record related to an International Application filed under the Patent Cooperation Treaty in this system of records may be disclosed, as a routine use, to the International Bureau of the World Intellectual Property Organization, pursuant to the Patent Cooperation Treaty.

6. A record in this system of records may be disclosed, as a routine use, to another federal agency for purposes of National Security review (35 U.S.C. 181) and for review pursuant to the Atomic Energy Act (42 U.S.C. 218(c)).

7. A record from this system of records may be disclosed, as a routine use, to the Administrator, General Services, or his/her designee, during an inspection of records conducted by GSA as part of that agency's responsibility to recommend improvements in records management practices and programs, under authority of 44 U.S.C. 2904 and 2906. Such disclosure shall be made in accordance with the GSA regulations governing inspection of records for this purpose, and any other relevant (i.e., GSA or Commerce) directive. Such disclosure shall not be used to make determinations about individuals.

8. A record from this system of records may be disclosed, as a routine use, to the public after either publication of the application pursuant to 35 U.S.C. 122(b) or issuance of a patent pursuant to 35 U.S.C. 151. Further, a record may be disclosed, subject to the limitations of 37 CFR 1.14, as a routine use, to the public if the record was filed in an application which became abandoned or in which the proceedings were terminated and which application is referenced by either a published application, an application open to public inspections or an issued patent.

9. A record from this system of records may be disclosed, as a routine use, to a Federal, State, or local law enforcement agency, if the USPTO becomes aware of a violation or potential violation of law or regulation.

Espacenet

Bibliographic data: EP1859432 (A2) — 2007-11-28

DEVICES, SYSTEMS AND METHODS OF CAPTURING AND DISPLAYING APPEARANCES

Inventor(s): VILCOVSKY NISSI [IL] ± (VILCOVSKY, NISSI)

Applicant(s): VILCOVSKY NISSI [IL] ± (VILCOVSKY, NISSI)

Classification: - **international:** ***G06F3/01; G06Q30/00; H04N5/262; H04N7/18***
- **cooperative:** **G02B5/08**; **G09F19/16**; **G09F27/00**; **H04N5/2624**; A47F2007/195; H04N2005/2726

Application number: EP20060711263 20060301

Priority number (s): WO2006IL00281 20060301 ; US20050656885P 20050301 ; US20050656884P 20050301

Also published as: EP1859432 (A4) WO2006092793 (A2) WO2006092793 (A3) US2011199294 (A1) US8624883 (B2) more

Abstract not available for EP1859432 (A2)
Abstract of corresponding document: WO2006092793 (A2)

Some demonstrative embodiments of the invention include systems, devices and/or methods enabling appearance comparison. The system, according to some demonstrative embodiments, may include at least one interactive imaging and display station. The station may include, for example, a mirror-display device capable of selectably operating in either or both a mirror mode or a display mode; an imaging device to capture one or more appearances appearing in a filed of view in front of the mirror-display device; and/or an image control unit to select the mode of operation of the mirror-display device according to a user command. Other embodiments are described and claimed.

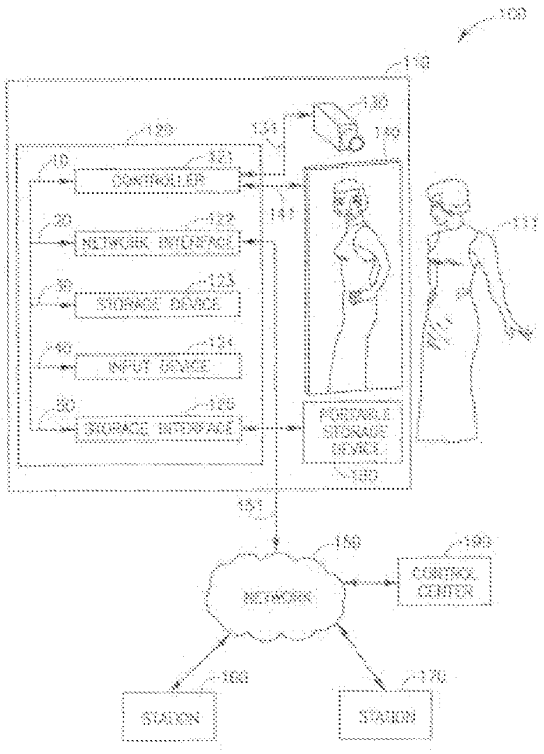
CONTROLLER
NETWORK INTERFACE
STORAGE DEVICE
INPUT DEVICE
SIGNAGE INTERFACE
PORTABLE STORAGE DEVICE
NETWORK
CONTROL CENTER
STATION
STATION

(19) Europäisches Patentamt
European Patent Office
Office européen des brevets

(11) Veröffentlichungsnummer:
(11) Publication number:
(11) Numéro de publication:

EP 1 859 432 A0

Internationale Anmeldung veröffentlicht durch die Weltorganisation für geistiges Eigentum unter der Nummer:

WO 2006/092793 (art. 158 des EPÜ).

International application published by the World Intellectual Property Organisation under number:

WO 2006/092793 (art. 158 of the EPC).

Demande internationale publiée par l'Organisation Mondiale de la Propriété sous le numéro:

WO 2006/092793 (art. 158 de la CBE).

(12) INTERNATIONAL APPLICATION PUBLISHED UNDER THE PATENT COOPERATION TREATY (PCT)

(19) World Intellectual Property Organization
International Bureau

(43) International Publication Date
8 September 2006 (08.09.2006)

PCT

(10) International Publication Number
WO 2006/092793 A2

(51) International Patent Classification: Not classified

(21) International Application Number: PCT/IL2006/000281

(22) International Filing Date: 1 March 2006 (01.03.2006)

(25) Filing Language: English

(26) Publication Language: English

(30) Priority Data:
60/656,885 1 March 2005 (01.03.2005) US
60/656,884 1 March 2005 (01.03.2005) US

(71) Applicant and
(72) Inventor: VILCOVSKY, Nissi [IL/IL]; Mota Gur 21, 69694 Tel Aviv (IL).

(74) Agents: PEARL COHEN ZEDEK LATZER et al.; Shenkar 5, Po Box 12704, 46733 Herzlia (IL).

(81) Designated States *(unless otherwise indicated, for every kind of national protection available)*: AE, AG, AL, AM, AT, AU, AZ, BA, BB, BG, BR, BW, BY, BZ, CA, CH, CN, CO, CR, CU, CZ, DE, DK, DM, DZ, EC, EE, EG, ES, FI, GB, GD, GE, GH, GM, HR, HU, ID, IL, IN, IS, JP, KE, KG, KM, KN, KP, KR, KZ, LC, LK, LR, LS, LT, LU, LV, LY, MA, MD, MG, MK, MN, MW, MX, MZ, NA, NG, NI, NO, NZ, OM, PG, PH, PL, PT, RO, RU, SC, SD, SE, SG, SK, SL, SM, SY, TJ, TM, TN, TR, TT, TZ, UA, UG, US, UZ, VC, VN, YU, ZA, ZM, ZW.

(84) Designated States *(unless otherwise indicated, for every kind of regional protection available)*: ARIPO (BW, GH, GM, KE, LS, MW, MZ, NA, SD, SL, SZ, TZ, UG, ZM, ZW), Eurasian (AM, AZ, BY, KG, KZ, MD, RU, TJ, TM), European (AT, BE, BG, CH, CY, CZ, DE, DK, EE, ES, FI, FR, GB, GR, HU, IE, IS, IT, LT, LU, LV, MC, NL, PL, PT, RO, SE, SI, SK, TR), OAPI (BF, BJ, CF, CG, CI, CM, GA, GN, GQ, GW, ML, MR, NE, SN, TD, TG).

Published:
— *without international search report and to be republished upon receipt of that report*

For two-letter codes and other abbreviations, refer to the "Guidance Notes on Codes and Abbreviations" appearing at the beginning of each regular issue of the PCT Gazette.

(54) Title: DEVICES, SYSTEMS AND METHODS OF CAPTURING AND DISPLAYING APPEARANCES

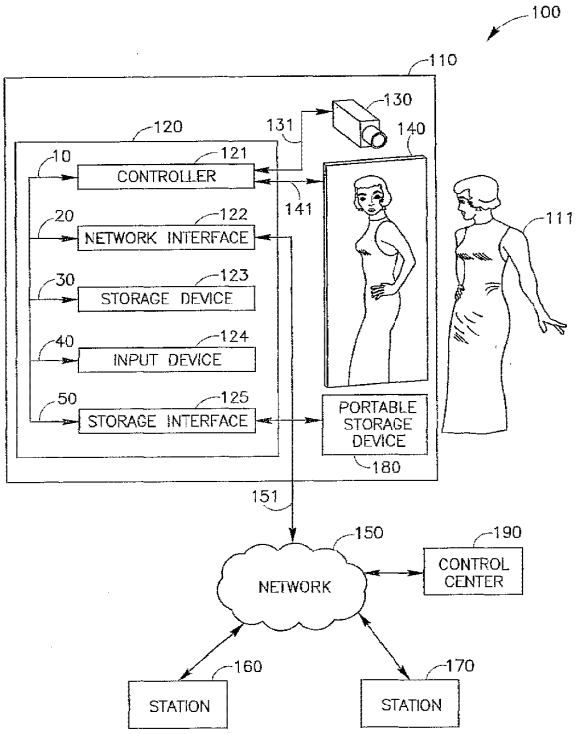

(57) Abstract: Some demonstrative embodiments of the invention include systems, devices and/or methods enabling appearance comparison. The system, according to some demonstrative embodiments, may include at least one interactive imaging and display station. The station may include, for example, a mirror-display device capable of selectably operating in either or both a mirror mode or a display mode; an imaging device to capture one or more appearances appearing in a filed of view in front of the mirror-display device; and/or an image control unit to select the mode of operation of the mirror-display device according to a user command. Other embodiments are described and claimed.

WO 2006/092793 A2

DEVICES, SYSTEMS AND METHODS OF CAPTURING AND DISPLAYING APPEARANCES

CROSS REFERENCE TO RELATED APPLICATIONS

[001] This application claims priority from United States Provisional Application No. 60/656,884, filed March 1, 2005; and United States Provisional Application No. 60/656,885, filed March 1, 2005, the entire disclosures of both of which are incorporated herein by reference.

FIELD OF THE INVENTION

[002] The invention relates generally to imaging and display systems and, more particularly, to interactive displays, e.g., in retail and/or service environments.

BACKGROUND OF THE INVENTION

[003] Customers may shop for consumer articles, for example, apparel such as clothes, e.g., shirts, pants, coats and other garments, as well as shoes, glasses, and/or any other items or products, such as cosmetics, furniture and the like. Shopping normally takes place at a shopping facility, for example, retail stores. Prior to making a decision which article to buy a customer may try on various articles (e.g., apparel, cosmetics) and/or pose with other articles (e.g., furniture), and may view for each trial a user-appearance in front of a mirror, which may be located, for example, at a trial area of the retail store. For example, the customer may try on a first article, e.g., a suit, and view for that first trial his/her user-appearance in front of the mirror. Then, the customer may try on a second article, e.g., another suit. The customer may then need to memorize his/her user-appearance from the first trial in order to perform a mental comparison between the first article and the second article, thereby to evaluate which of the two articles might be a better fit for the customer.

[004] Unfortunately, since the customer may try on numerous articles and/or since the second trial may take place a considerable amount of time after the first trial, the customer may not be able to recall his/her appearance for each trial and may therefore be

Microsoft Ex. 1002 - Page 237 of 451

required to repeatedly retry articles, e.g., items of apparels, previously tried on. This may result in a frustrating and inefficient shopping experience.

SUMMARY OF SOME EMBODIMENTS OF THE INVENTION

[005] Some demonstrative embodiments of the invention include devices, systems and/or methods enabling appearance comparison.

[006] According to some demonstrative embodiments of the invention, a system enabling appearance comparison may include at least one interactive imaging and display station. The station may include, for example, a mirror display device capable of operating in either or both a mirror or a display mode; an imaging device to capture one or more appearances from a field of view in front of the mirror-display device; and/or an image control unit to select the mode of operation the mirror display device according to a user command.

[007] According to some demonstrative embodiments of the invention the image control unit may include an input device to receive the user command.

[008] According to some demonstrative embodiments of the invention, the image control unit may include a storage device to store data of one or more images which may correspond to one or more appearances.

[009] According to some demonstrative embodiments of the invention, the mirror-display device may be capable of being partitioned into at least first and second simultaneously-displayable frames. The first frame may be selectably operable, for example, both in a mirror mode and a display mode. The second frame may be operable, for example, in a mirror mode.

[0010] According to some demonstrative embodiments of the invention, the imaging device may be capable of capturing three-dimensional images of appearances.

[0011] According to some demonstrative embodiments of the invention, the mirror-display device may be capable of displaying images of appearances at predefined sequences.

Microsoft Ex. 1002 - Page 238 of 451

[0012] According to some demonstrative embodiments of the invention, the image control unit may be able to selectively enable a user access to images of appearances authorized to the user, e.g., based on user-identifying data received from the user.

[0013] According to some demonstrative embodiments of the invention, the at least one interactive imaging and display system may include two or more interactive imaging and display stations able to communicate over a network. For example, the two or more stations may be able to communicate between each other data representing images of appearances.

[0014] According to some demonstrative embodiments of the invention, the image control unit may control the mirror-display device to display, e.g., during the display mode, one or more images corresponding to the appearances. The one or more images may include, for example, one or more mirrored appearances.

[0015] According to some demonstrative embodiments of the invention, a method enabling appearance comparison may comprise using a mirror mode of operation of a mirror-display device capable of being selectably operated in either a mirror or a display mode; capturing an image corresponding to an appearance of a first trial in front of the mirror-display device; storing the image of the first trial; selecting the display mode of operation of the mirror-display device; and/or retrieving the image of the first trial and displaying the image on the mirror-display device.

Microsoft Ex. 1002 - Page 239 of 451

BRIEF DESCRIPTION OF THE DRAWINGS

[0016] The subject matter regarded as the invention is particularly pointed out and distinctly claimed in the concluding portion of the specification. The invention, however, both as to organization and method of operation, together with features and advantages thereof, may best be understood by reference to the following detailed description when read with the accompanied drawings in which:

[0017] Fig. 1 is a schematic illustration of an interactive system enabling appearance comparison in accordance with some demonstrative embodiments of the invention;

[0018] Figs. 2A and 2B are schematic illustrations of two, sequential, stages of appearances comparison using an interactive system in accordance with some demonstrative embodiments of the invention; and

[0019] Figs. 3A, 3B and 3C are schematic illustrations of three, sequential, stages of appearances comparison using an interactive system in accordance with some demonstrative embodiments of the invention; and

[0020] Fig. 4 is a schematic flow chart of a method enabling comparison of one or more user-appearances in accordance with some demonstrative embodiments of the invention.

[0021] It will be appreciated that for simplicity and clarity of illustration, elements shown in the figures have not necessarily been drawn accurately or to scale. For example, the dimensions of some of the elements may be exaggerated relative to other elements for clarity or several physical components included in one element. Further, where considered appropriate, reference numerals may be repeated among the figures to indicate corresponding or analogous elements. It will be appreciated that these figures present examples of embodiments of the present invention and are not intended to limit the scope of the invention.

Microsoft Ex. 1002 - Page 240 of 451

DETAILED DESCRIPTION OF SOME DEMONSTRATIVE EMBODIMENTS OF THE INVENTION

[0022] In the following description, various aspects of the present invention will be described. For purposes of explanation, specific configurations and details are set forth in order to provide a thorough understanding of the present invention. However, it will be apparent to one skilled in the art that the present invention may be practiced without the specific details presented herein. Furthermore, some features of the invention relying on principles and implementations known in the art may be omitted or simplified to avoid obscuring the present invention.

[0023] Some demonstrative embodiments of the invention may include an interactive system enabling a user to compare one or more appearances, for example, to compare between different appearances, e.g., as described in detail below.

[0024] The term "user-appearance" as used herein may relate to the appearance of a customer while trying a consumer article. The article may include, for example, apparel, such as clothing, shoes, glasses, garments, ties, and the like; an article, e.g., furniture, located in the vicinity of the customer; as well as other items, articles, designs or products such as, for example, cosmetics, headdresses, hair cuts.

[0025] According to some demonstrative embodiments of the invention, the system may include an imaging device able to capture user-appearances and a mirror-display device, able to operate selectably as a mirror or as a display. When in the mirror mode, the mirror-display device may enable the user to evaluate and/or view a user-appearance of a current trial of a consumer article. When in the display mode, the mirror-display device may enable the user to evaluate and/or view one or more user-appearances, e.g., as captured by the imaging device, of a previous trial, e.g., as described in detail below.

[0026] Reference is made to Fig. 1, which schematically illustrates an interactive system 100 in accordance with some demonstrative embodiments of the invention.

[0027] According to some demonstrative embodiments of the invention, system 100 may include an interactive imaging and display station 110, which may include an image control unit 120, an imaging device 130, and a mirror-display device 140. Image control

Microsoft Ex. 1002 - Page 241 of 451

unit 120 may include a controller 121, a network interface 122, a storage device 123, an input device 124, all of which elements are described in detail below.

[0028] Aspects of the invention are described herein in the context of demonstrative embodiments of an imaging device, e.g., imaging device 130, a mirror-display device, e.g., mirror-display device 140, and/or an image control unit, e.g., image control unit 120, being separate units of an appearance comparison system, e.g., system 100. However, it will be appreciated by those skilled in the art that the invention is not limited in this respect, and that according to other embodiments of the invention, the system may include any suitable configuration, combination, and/or arrangement of the imaging device, the mirror-display device, and/or the image control unit. For example, the system may include an integrated module including the mirror-display device, the imaging device and/or the image control unit. For example, the imaging device and/or the image control unit may be implemented as part of the mirror-display device.

[0029] According to some demonstrative embodiments of the invention, mirror-display device 140 may be configured and/or may include components and mechanisms allowing mirror-display device 140 to operate selectably in two modes of operation. In a first mode of operation (the "mirror-mode"), mirror-display device 140 may operate as a mirror. In a second mode of operation (the "display mode"), mirror-display device 140 may operate as a display. When mirror-display device 140 operates in the mirror-mode, a user 111 of system 100 may evaluate and/or view a user-appearance of a first trial of a consumer article, as may be reflected by mirror-display device 140. Imaging device 130 may capture an image of the user-appearance of the first trial. The captured image may be stored, for example, by storage device 123, e.g., as described below. User 111 may then pose in front of mirror-display device 140 trying a second article, and imaging device 130 may capture a second image of the user-appearance of the second trial. When in the display mode, mirror-display 140 may be controlled to display one or more of previously captured images. By virtue of the capability of mirror-display device 140 to operate selectably in the mirror or display mode, user 111 may be able to compare simultaneously or sequentially between the user-appearances of the first and second trials, as described in detail below. In some demonstrative embodiments of the invention, e.g., as shown in Figs. 1, 2A, 2B, 3a, and/or 3B, controller 121 may control device 140 to

Microsoft Ex. 1002 - Page 242 of 451

display, during the display mode of operation, a mirror-image of the appearances. However, it will be appreciated by those of ordinary skill in the art that the invention is not limited in this respect, and that in other embodiments the controller may control device 140 to display, during the display mode of operation, any other image corresponding to the appearance, e.g., a rotated appearance, a revered appearance, a substantially non-altered, e.g., frontal, appearance, a rendered appearance, and the like, e.g., as described below.

[0030] Device 140 may include any suitable configuration and/or mechanism to enable selectably operating mirror-display device 140 in the first and second modes of operation. For example, in one embodiment device 140 may include an array of liquid crystal (LC) elements, which may change their optical attributes such as, e.g., reflectivity, refractive index and the like, depending on, for example, a voltage applied to the liquid crystals. For example, applying a first voltage may result in changing the optical attributes of the liquid crystals such that mirror-display device 140 may operate as a mirror; and a second voltage may result in changing the optical attributes of the liquid crystals such that mirror-display device 140 may operate as a liquid crystal display.

[0031] In another embodiment of the invention, for example, mirror-display device 140 may include a liquid crystal display (LCD) device embedded in a semi-reflective or one-directional mirror. Accordingly, if the LCD is switched to an inactive mode of operation, mirror-display 140 may passively reflect sufficient light incident thereon to enable the user to view user-appearances at reasonable quality and brightness. In contrast, when the LCD is turned to an active mode of operation, mirror-display device 140, images displayed by the LCD device may be viewed by user 111 because they may be significantly brighter than residual reflections from the surface of the mirror-display.

[0032] According to some demonstrative embodiments of the invention, mirror display device 140 may be implemented by a LCD HD ready mirror TV such as, for example, model No. 32PM8822/10 available from Royal Philips Electronics, e.g., as described at the Internet site <http://www.research.philips.com/newscenter/archive/2003/mirrortv.html>. Such a device may include, for example, a polymer-based organic light-emitting display (OLED). Mirror-display device 140 may include any other suitable device implementing any suitable display technology. For example, device 140 may include a nano-emissive

Microsoft Ex. 1002 - Page 243 of 451

display (NED); a plasma display panel (PDP); a cathode ray tube display (CRT); a Digital Light Processing (DLP) display; a surface conduction electron emitter display (SED); a Tablet screen; a flat-panel SED; an Organic electronic display; electronic paper; a 3-Dimentional display, e.g., a Hologram display; a thin film resistor (TFT) display; an optical TFT; a Dot Matrix LED screen; an LCD having CCD capabilities, e.g., such that mirror-display 140 may be capable of performing the functionality of imaging device 130; a paintable LCD; a surface-conduction electron-emitter (SED) display; a high definition television (HDTV) display; a rear projector display device, and the like.

[0033] According to some demonstrative embodiments of the invention, imaging device 130 may be adapted to capture one or more appearances from a Field-of-View (FOV) in front of mirror-display device 140. The FOV in front of mirror-display device 140 may include, for example, a field, area, scene, zone, and/or region in front of mirror-display device 140. For example, the FOV may include at least part of a field, area, scene, zone, and/or region captured by mirror-display device 140 when in the mirror mode.

[0034] Although the scope of the present invention is not limited in this respect, imaging device 130 may be or may include, for example, a CCD camera, a video camera, a camera and/or camera set-up enabling capturing of 3D-images, e.g., a stereoscopic camera and the like. A stereoscopic camera may be adapted, for example, to capture a 3-D image of the user-appearance. The stereoscopic camera may include, for example, two lenses having a distance between each other that may correspond to a distance between two human eyes. Accordingly, the stereo camera may be able to simulate human binocular vision, also known as Stereophotography, thereby being able to capture a 3D-image.

[0035] According to some demonstrative embodiments of the invention, station 110 may be a stand alone unit, which may be located at an appearance- comparison area of a desired location, for example, an office, a home, or a retail store, e.g., apparel store.

[0036] According to other demonstrative embodiments of the invention, station 110 may be connected, e.g., via network interface 122, to a network, for example, a network 150, thereby enabling communication between station 110 and one or more other stations affiliated with network 150 such as, for example, station 160 and/or station 170.

[0037] According to some demonstrative embodiments of the invention, station 110 may include a network interface 122, which may be adapted to interact with network 150, to send and receive information from other stations in network 150, as described herein. Such information may include but is not limited to data corresponding to images of users captured at various stations of system 100, for example, station 160 and/or 170, as well as identifying information of the users to enable secure access to the system, as described in more detail below. Network 150 may include, for example, a local area network (LAN), a wide area network (WAN), a global communication network, e.g., the Internet, a wireless communication network such as, for example, a wireless LAN (WLAN) communication network, a Bluetooth network, a wireless virtual private network (VPN), a cellular communication network, for example, a 3rd Generation Partnership Project (3GPP), such as, for example, Frequency Domain Duplexing (FDD) network, a Global System for Mobile communications (GSM) network, a Wideband Code Division Multiple Access (WCDMA) cellular communication network, and the like.

[0038] According to some demonstrative embodiments of the invention, one or more of stations 160 and 170 may be portable devices. Non-limiting examples of such portable devices may include a mobile telephone, a laptop computer, a notebook computer, a mobile computer, a Personal Communication Systems (PCS) device Personal Digital Assistants (PDA), a wireless communication device, a PDA device which incorporates a wireless communication device, a cellular telephone, a wireless telephone, a smart card, a token, a memory card, a memory unit, and the like. In some embodiments of the invention, one or more of stations 160 and 170 may be non-portable devices such as, for example, a desktop computer, a tablet computer, a television set, a server computer, and the like.

[0039] According to some embodiments of the invention, system 100 may also include a control center 190, which may be connected to stations 110, 160 and/or 170, e.g., via network 150. Control center 190 may receive and store data, which may represent, for example, data and/or images of user-appearances, received from one or more of stations 110, 160 and/or 170.

[0040] According to some embodiments of the invention, stations 110, 160 and/or 170 may be located at different locations such as, for example, different stores of a retail

chain. In addition, stations 110, 160 and/or 170 may be located at different locations within a building, e.g., different floors, different sections at the same floor and the like. Such locations may include, for example, clothing stores, shoe stores, points of sale, concept showrooms, exhibitions, shopping malls, eyewear stores, cosmetic stores, sport clubs, health institutes, fitness centers, airports, train stations, coffee shops, restaurants, hotels, homes, and the like. One or more of stations 110, 160 and 170 may also be used for interactive billboard signs. For example, imaging device 130 may, for example, capture images which may be displayed on a billboard sign (not shown). System 100 may enable user 111 to choose an image to be displayed on the billboard sign out of a plurality of images of, for example, various previous trials of apparel.

[0041] According to some demonstrative embodiments of the invention, images of user appearances may be viewed at different locations. For example, imaging device 130 may capture an image of the first trial. The image may then be sent from network interface 122 via network 150 using signals 151 and 152, for example, to station 160. Accordingly, user 111 may be able to view the image of the first user-appearance at station 160. Therefore, user 111 may be able to view, for example, the user-appearance of the first trial in a first store of a retail store chain, e.g., a store associated with station 110; and may compare the user-appearance of the first trial with a user-appearance of a second trial, which may take place at a second store of the same or an affiliated chain, e.g., a store associated with station 160; and/or at a different time, e.g., one or more hours, days or weeks after the first trial.

[0042] According to another demonstrative embodiment of the invention, imaging device 130 may capture an image of a user-appearance of a first trial, and send the image via network interface 122 over network 150 to control center 190, where the image may be stored for later retrieval. Accordingly, user 111 may gain access to the images of the first trial by accessing any station, e.g., station 160, connected over network 150 with control center 190.

[0043] According to some demonstrative embodiments of the invention, storage device 123 may include, for example, a hard disk drive, a floppy disk drive, a Compact Disk (CD) drive, a CD-ROM drive, a Digital Versatile Disc (DVD) drive, or other suitable removable or non-removable storage units.

Microsoft Ex. 1002 - Page 246 of 451

[0044] According to some demonstrative embodiments of the invention, controller 121 may be or may include, for example, a Central Processing Unit (CPU), a Digital Signal Processor (DSP), a microprocessor, a controller, a chip, a microchip, an Integrated Circuit (IC), or any other suitable multi-purpose or specific processor or controller, e.g., as are known in the art.

[0045] Input device 124 may include, for example, a keyboard; a remote control; a motion sensor; a pointer device such as, for example, a laser pointer; a mouse; a touch-pad; a touch screen, which may be embedded, for example, in mirror-display device 140, or may be implemented by any other suitable unit, e.g., separate from device 140; a biometric input device, e.g., a fingerprint scanner, and/or a camera for scanning a face; and/or any other suitable pointing device or input device. Input device 124 may be adapted to receive user-identifying data, for example, to enable, access, e.g., secure access, of user 111 to system 100, as described in detail below.

[0046] According to some demonstrative embodiments of the invention, user 111 may provide user commands to input device 124 for operating the imaging device 130. Input device 124 may include, for example, an interface to enable user 111 of system 100 to define operational parameters of imaging device 130. Controller 121 may receive the inputs from user 111 via signals 131 and control the operation of imaging device 130 accordingly. The user commands may include, for example, commands relating to the timing for capturing an image, the positioning of imaging device 130, e.g., according to an automatic tracking algorithm which may follow, for example, the position of user 111, and/or imaging attributes such as focus, camera position, capturing angle, dynamic range and the like. The user commands may also include commands to define image capturing operating modes of imaging device 130 such as, for example, a video capturing mode, a photographic mode and the like. According to some embodiments of the invention, imaging device 130 may include a sound input device, for example, a microphone and/or a sound output device, for example, a loudspeaker. Accordingly, imaging device may receive audio signals, e.g., voice signals generated by user 111, which may be recorded and stored, e.g., in storage device 123 and reproduce the audio signals through the sound output device. The sound output device may be able to reproduce any other kind of audio signals such as, radio programs, compact disc records and the like.

[0047] According to some demonstrative embodiments of the invention, controller 121 may, for example, set the mode of operation of mirror-display device 140 according to the command received from user 111. For example, if mirror-display device 140 operates in the mirror mode, the user of system 100 may provide input device with a switching command, e.g., by pressing a designated button at input device 124, for switching mirror-display device 140 to the display mode. Controller 121 may receive the input from input device 124 and may control device 140 to switch to the display mode of operation, e.g., using signals 141.

[0048] According to some demonstrative embodiments of the invention, imaging device 130 may be mounted in various positions such as, for example, on top, below, or on the side of mirror-display device 140, thereby capturing an image of a user-appearance which may be an image of a given trial of apparel, an image of user 111 with various articles, e.g., furniture and/or posing with different garments and the like. In some embodiments of the invention, imaging device 130 may capture a user-appearance as it appears in mirror-display device 140, i.e., a mirror-image of the user-appearance. In other embodiments, imaging device 130 may capture the appearance, and controller 121 may generate a mirror-image corresponding to the appearance captured by imaging device 130. For example, storage 123 may store instructions that when executed by controller may result in any suitable method or algorithm of rotating, reversing, and/or mirroring the appearance captured by imaging device 130, thereby to generate image data representing rotated, reversed, and/or mirrored image of the image captured by device 130. According to these embodiments, controller 121 may control mirror-display device 140 to display, during the display mode of operation, the rotated, reversed, and/or mirrored image. In other embodiments, controller 121 may control mirror-display device 140 to display, during the display mode of operation, an image corresponding to the image captured by device 130, e.g., a non-mirrored, non-rotated, and/or non-reversed image. In some embodiments, imaging device 130 may not be visible to user 111, may be located behind display device 140, and/or may be embedded in mirror-display device 140, which may be or may include, for example, a LCD-CCD device capable of both displaying and capturing images. For example, in one demonstrative embodiment of the invention, device 140 may include an array, screen or surface, e.g., including liquid crystals, to

Microsoft Ex. 1002 - Page 248 of 451

perform the mirror-display functionality, e.g., as described above, as well as the imaging functionality of imaging device 130, e.g., device 140 may include a mirror-imaging-display device.

[0049] In some demonstrative embodiments of the invention, one or more of stations 110, 160 and/or 170 may not include image capturing device 130; and/or one or more of stations 110, 160 and/or 170 may not include mirror-display 140. For example, a first station of system 100 may include only imaging device 130, and may not include, e.g., mirror-display device 140. User 111 may use the first station to capture the image of the first trial of the user-appearance, e.g., without being able to view at the first station the resultant image of the first trial. User 111 may later view the captured image of the first trial at another station of system 100, which may include mirror-display device 140.

[0050] According to some demonstrative embodiments of the invention, imaging device 130 may be positioned in a manner enabling capturing of an image and/or a sequence of images, videos or the like, of a scene taking place in front of mirror-display device 140. Additionally or alternatively, imaging device 130 may positioned in a manner enabling capturing an image reflected from mirror-display device 140. For example, imaging device 130 may be able to capture an image of user 111 posing in front of mirror-display device 140. While posing in front of mirror-display device 140, user 111 may check his appearance of, e.g., a first fitting trial of clothes. According to an input provided by user 111 at input device 124, imaging device 130 may capture the image of the user-appearance which may be, for example, a given trial of apparel, e.g., a garment and the like. It may be noted that trials by user 111 may also include user 111 engaging with various subjects, which may be located in the vicinity of user 111 such as, furniture, studio set-up and the like. Accordingly, imaging device 130 may capture images of user-appearances of, for example, a first trial, a second trial, etc., and may send the respective captured images to storage device 123 via signals 131 and signals 30. User 111 may be able to retrieve the captured image of, e.g., the first trial, at a later time, e.g., following the second or other subsequent trials, and may compare between the first and second or other trial, e.g., as described below with reference to Figs. 2A, 2B and 2C.

[0051] According to some demonstrative embodiments of the invention, storage device 123 may be adapted to receive data representing images captured by imaging device 130,

Microsoft Ex. 1002 - Page 249 of 451

and to store images of appearances and, more specifically, user-appearances of, for example, given trials of apparel, captured by imaging device 130. Images of given trials of user-appearances may be retrieved from storage device 123, e.g., by controller 121, and displayed by display 140. User 111 may compare between the displayed images, e.g., as described in detail below.

[0052] According to some demonstrative embodiments of the invention, storage device 123 may include data representing, e.g., software algorithms, requiring and/or verifying user identifying data such as user-ID, password, login-time, bio-metric data and the like to enable secure access to station 110, as described in detail below. For example, controller 121 may control mirror-display device 140 to display images corresponding to an identity of user 111, e.g., based on the identity data provided by user 111. For example, user 111 may provide input 124 with user-identifying input, which may include, for example, a biometric input such as face recognition, a hand print, a finger print, an eye print, voice recognition and the like. The user-identifying input may include any other suitable input, for example, a credit card, a personal identification number (PIN), a password, a smart card, a customer card, a club card, or the like. Controller 121 check, e.g., based on any suitable method and/or algorithm, whether the user-identifying input provided at input device 124 matches with user-identifying data which may be stored, e.g., in storage device 123 or in control center 190. Software having the capability of verifying a biometric input may be, for example, "Active ID FaceVision technology" ® provided by Geometric Inc. If controller 121 matches the input of user 111 with the stored user-identifying data, controller 121 may enable user 111 to access data representing, for example, images of previous user-appearances of user 111.

[0053] According to some demonstrative embodiments of the invention, storage device 123 may include data representing, e.g., software algorithms enabling additional system features such as, for example, rendering virtual effects on mirror-display device 140. For example, controller 121 may be able to render an image at mirror-display device 140 of user-appearances engaged and/or combined with virtual articles such as, for example, clothes, collections, headdresses, hair cuts, furniture and the like. In addition, controller 121 may be able to render an image at mirror-display device 140 of user-appearances having different body shapes for simulating, e.g., weight loss, weight gain of user 111

Microsoft Ex. 1002 - Page 250 of 451

and the like. For example, user 111 may choose in a first trial a specific article, such as a suit out of a collection and controller 121 may virtually adjust the collection to an image of user 111 appearing in mirror-display device 140. Controller 121 may store the image of the first trial in storage device 123 and may perform the same step at a second trial. Accordingly, user 111 of system 100 may be able to compare between user-appearances of the first and a second trials of the collection.

[0054] According to some demonstrative embodiments of the invention, controller 121 may provide, for example, image and/or video browsing capabilities, image and/or video replay functions, which capabilities and functions may be predefined by system 100 or may be defined, e.g., on-the-fly, according to one or more user commands received from user 111 via input device 124. For example, controller 121 may be able to retrieve one or more images of previous user-appearances and display the images on mirror-display device 140 at various sequences. For example, images from previous trials may be displayed in a substantially continuous forward, backwards, or mixed, e.g., randomly-accessible, sequence, and/or may be a stepwise sequence or in any other sequence. Furthermore, images from previous trials may be displayed simultaneously at mirror-display device 140, e.g., as described below. Controller 121 may also be able to delete previously captured user-appearances, limit the amount of data which may be saved in storage device 123 and the like, and may further control a shape, size, color, etc., of the image displayed on mirror-display device 140.

[0055] According to some demonstrative embodiments of the invention, user 111 may use a portable storage device 180 able to store one or more of the captured images. The portable storage device may include any suitable portable storage device, e.g., a smartcard, a disk-on-key device, and the like. User 111 may download, for example, images represented by, .e.g., signals 50, of a first trial of user-appearances from storage device 123, e.g., via a storage interface 125 or via any other suitable data connection. User 111 may then upload at a later time the image of, e.g., the first trial, to another location, e.g., a home of user 111, or another station of system 100, e.g., station 170.

[0056] In some embodiments of the invention, station 110 may include more than one mirror-display device or may include a mirror-display device 140, which may be

partitioned simultaneously into two frames as described hereinafter with reference to Figs. 2A and 2B.

[0057] According to some demonstrative embodiments of the invention, controller 121 may record or store, e.g., in storage 123, parameters characterizing user 111. For example, system 100 may include a weighing machine, connected to, e.g., storage device 123 via controller 121. Controller 121 may be able to record, for example, a weight of user 111 during, for example, a trial of an article. Accordingly, user 111 may later retrieve the parameter which may be, for example, the weight of user 111.

[0058] Reference is now made to Figs 2A and 2B, which schematically illustrate stages of comparing between appearances using an interactive system in accordance some demonstrative embodiments of the invention.

[0059] According to some demonstrative embodiments of the invention, mirror-display device 140 may be partitioned into two frames, wherein one frame may operate as a mirror frame 191 and another frame 192 may operate selectably as a mirror and as a display frame. As shown in Fig. 2A, user 111 may pose in front of mirror frame 191 a first trial, which may be captured by imaging device 130 and stored in storage device 123. Henceforward, as indicated in Fig. 2B, user 111 may view simultaneously in mirror frame 192 the image of the user-appearance of the first trial and/or any other user-appearances, e.g., user-appearances stored in storage device 123 and/or received over network 150 (Fig. 1), side-by-side with the normal mirror appearance of a second trial, and compare between the first and the second trial.

[0060] Reference is now made to Figs. 3A, 3B and 3C, which schematically illustrate three, sequential, stages of comparing between appearances using an interactive system in accordance some demonstrative embodiments of the invention.

[0061] As shown in Fig. 3A, the user of system 100 may view a first trial of a user-appearance in mirror-display device 140 operating in its mirror mode. Controller 121 may receive, e.g., from input device 124, a user input, which may include a request to use imaging device 130 for capturing a first trial of the user-appearance. As a result, imaging device 130 may capture an image of the first trial of the user-appearance and storage device 123 may store the captured image.

Microsoft Ex. 1002 - Page 252 of 451

[0062] As shown in Fig. 3B, user 111 may view a second trial of his user-appearance in mirror-display device 140, which may operate in the mirror mode of operation. Then, when user 111 desires to view a previous appearance, e.g., for comparison, controller 121 may receive a user input via input device 124 requesting to view the first trial. At this point, as shown in Fig. 3C, controller 121 may change the operational mode of mirror-display device 140 to the display mode using signals 141. Controller 121 may also control device 140 to display the first trial. Therefore, by switching between operating modes of mirror-display device 140, user 111 may compare the user-appearance of the second trial with the user-appearance of the first trial and/or any other user-appearances previously stored in storage device 123.

[0063] Reference is now made to Fig. 4, which schematically illustrates a flow-chart of a method enabling comparing between one or more various appearances in accordance with some demonstrative embodiments of the invention. Although the invention is not limited in this respect, one or more operations of the method of Fig. 4 may be performed by one or more elements of system 100 (Fig. 1).

[0064] As indicated at block 410, the method may include, for example, setting the operating mode of a mirror-display device. For example, user 111 (Fig. 1) may initially set the operating mode of mirror-display device 140 (Fig. 1) to the mirror mode. Alternatively, display 140 (Fig. 1) may be designed to operate in the mirror mode by default whenever a new user logs into system 100 (Fig. 1).

[0065] As indicated at block 420, the method may also include, for example, posing in front of the mirror-display device. For example, user 111 (Fig. 1) may pose in front of mirror-display device 140 (Fig. 1) and check the user-appearance of a first trial of, e.g., clothing, shoes and/or any other apparel.

[0066] As indicated at block 430, the method may also include, for example, capturing an image of the user-appearance of the first trial. For example, user 111 (Fig. 1) may provide user command to device 120 (Fig. 1) commanding imaging device 130 (Fig. 1) to capture an image of the user-appearance of the first trial.

[0067] As indicated at block 440, the method may also include, for example, posing in front of the mirror-display device in a different user-appearance. For example, user 111 (Fig. 1) may change one or more items of environment such as, for example, furniture

Microsoft Ex. 1002 - Page 253 of 451

and/or apparel, pose once again in front of mirror-display device 140 which may operate in mirror mode, and view a second user-appearance.

[0068] As indicated at block 450, the method may also include, for example, switching between operating modes of the mirror-display device. For example, user 111 (Fig. 1) may switch mirror-display device 140 (Fig. 1) between the mirror and the display mode. Accordingly, user 111 (Fig. 1) may be able to compare between the user-appearance of the first trial, and/or any other user-appearances, e.g., user-appearances stored in storage device 123 and/or received over network 150 (Fig. 1), and the user-appearance of the second trial.

[0069] According to some demonstrative embodiments of the invention, user 111 (Fig. 1) may indicate, and/or station 110 (Fig. 1) may be able to store, e.g., automatically, for each trial parameters, e.g., including shopping parameters, such as, for example, name of store, address of store, price, time and/or date of trial of apparel, name of salesperson, and the like. User 111 (Fig.1) may, for example, store the captured images of user-appearances in a removable or portable storage device, e.g., as described above with reference to Fig. 1, and may later review images of user-appearances while being able to ascribe every image to, e.g., a specific store and the like. In addition, user 111 may define, and/or controller 121 (Fig. 1) may be able to generate, and/or store in storage device 123 reminders, for example, alarms about, e.g., discounts, end of season sales and the like.

[0070] While certain features of the invention have been illustrated and described herein, many modifications, substitutions, changes, and equivalents may occur to those skilled in the art. It is, therefore, to be understood that the appended claims are intended to cover all such modifications and changes as fall within the true spirit of the invention.

Microsoft Ex. 1002 - Page 254 of 451

CLAIMS

[0071] What is claimed is:

1. A system to enable appearance comparison, the system comprising:

   at least one interactive imaging and display station, the station comprising:

   a mirror-display device capable of selectably operating in either or both a mirror mode or a display mode;

   an imaging device to capture one or more appearances from a field-of-view in front of said mirror-display device; and

   an image control unit to select the mode of operation of said mirror-display device according to a user command.

2. The system of claim 1, wherein said image control unit includes an input device to receive said user command from a user.

3. The system of claim 1, wherein said image control unit includes a storage device to store one or more images corresponding to said one or more appearances.

4. The system of claim 1, wherein said mirror-display device is capable of being partitioned into at least first and second simultaneously-displayable frames, the first frame selectably operable both in a mirror mode and a display mode, and the second frame operable in a mirror mode.

5. The system of claim 1, wherein said imaging device is capable of capturing three-dimensional images of said appearances.

6. The system of claim 1, wherein said mirror-display device is capable of displaying images of appearances at predefined sequences.

Microsoft Ex. 1002 - Page 255 of 451

7. The system of claim 1, wherein said image control unit is able to selectively enable a user to access images of appearances authorized to said user, based on user-identifying input received from said user.

8. The system of claim 1, wherein said at least one interactive imaging and display station comprises two or more interactive imaging and display stations able to communicate over a network.

9. The system of claim 8, wherein said two or more stations are able to communicate between each other data representing images of appearances.

10. The system of claim 1, wherein said image control unit is able to control said mirror display device to display, during said display mode, one or more images corresponding to said appearances.

11. The system of claim 10, wherein the one or more images comprise one or more mirrored appearances.

12. A method to enable appearance comparison, the method comprising:

using a mirror mode of operation of a mirror-display device capable of being selectably operated in either a mirror mode or a display mode;

capturing an image corresponding to an appearance of a first trial from a field-of-view in front of said mirror-display device;

storing said image;

selecting the display mode of operation of said mirror-display device;

retrieving said image and displaying the image on said mirror-display device.

Microsoft Ex. 1002 - Page 256 of 451

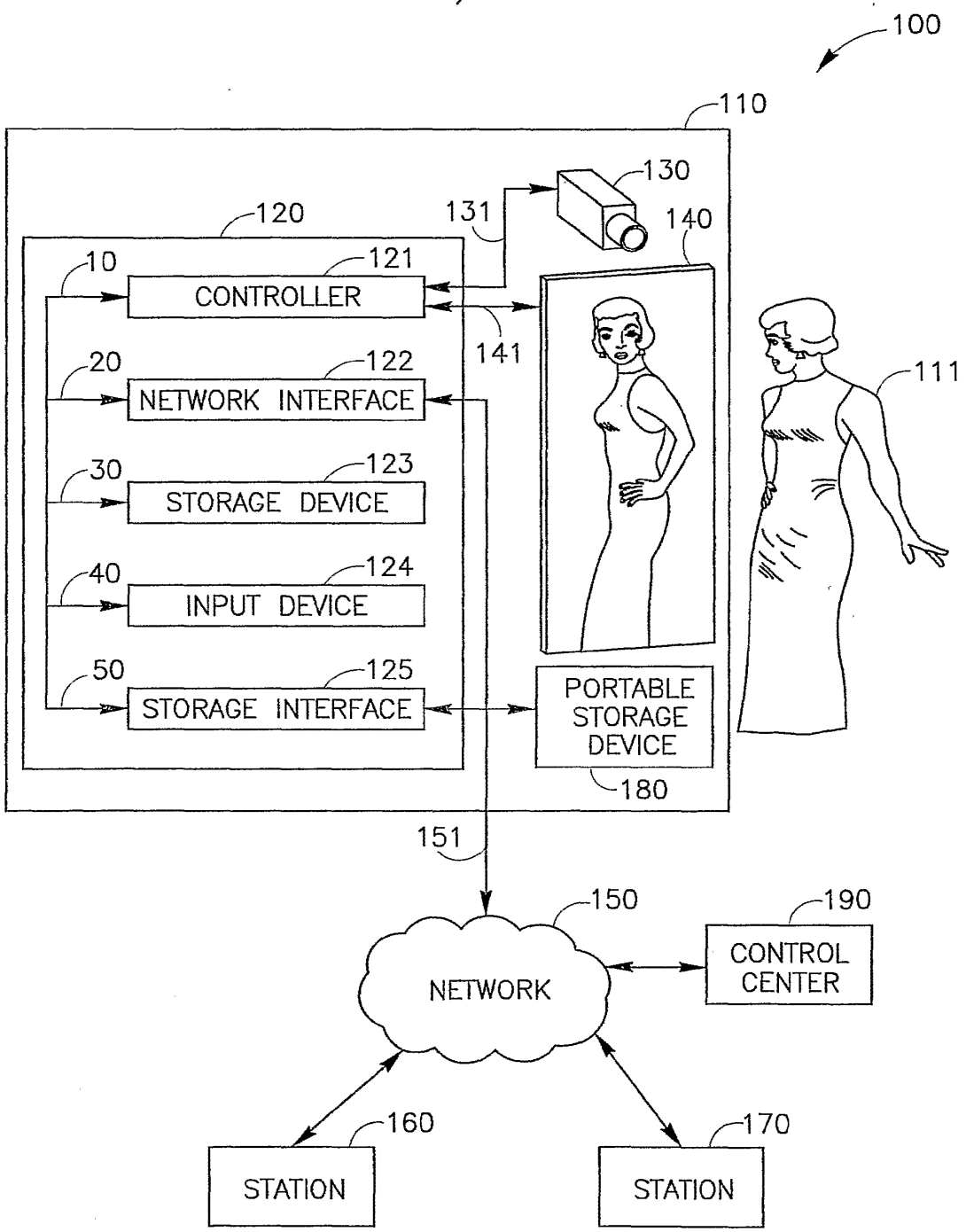
100
110
130
131
140
120
10
121
CONTROLLER
141
20
122
NETWORK INTERFACE
111
30
123
STORAGE DEVICE
40
124
INPUT DEVICE
50
125
STORAGE INTERFACE
PORTABLE STORAGE DEVICE
180
151
150
190
NETWORK
CONTROL CENTER
160
170
STATION
STATION

FIG.1

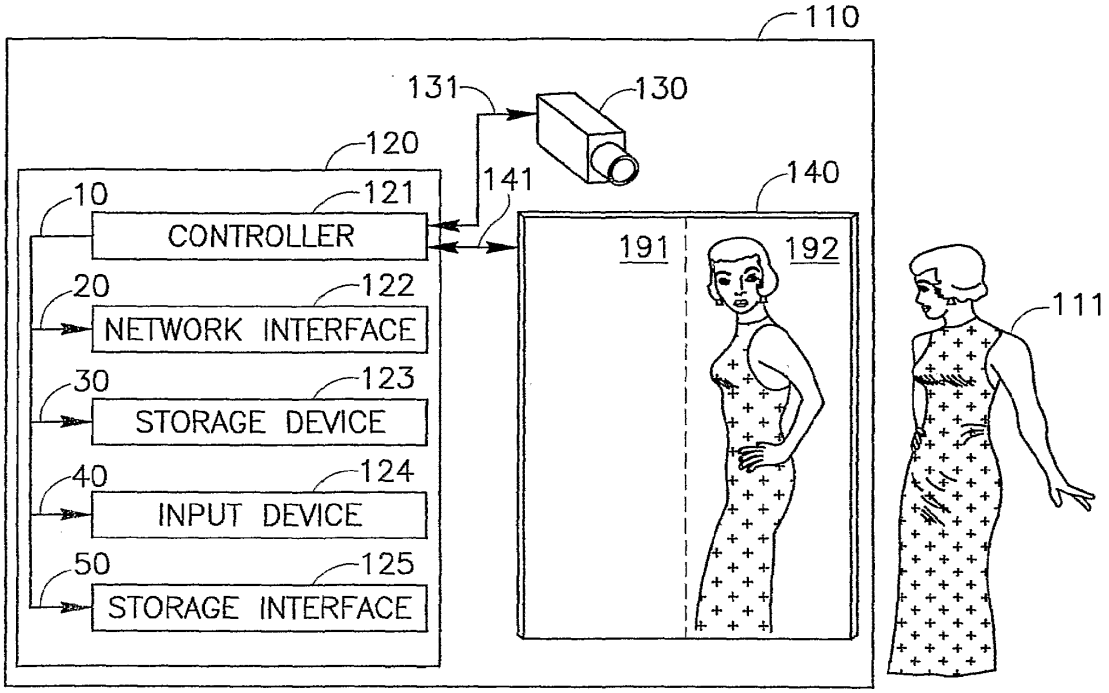
110
131
130
120
141
140
10
121
CONTROLLER
191
192
20
122
NETWORK INTERFACE
111
30
123
STORAGE DEVICE
40
124
INPUT DEVICE
50
125
STORAGE INTERFACE

FIG.2A

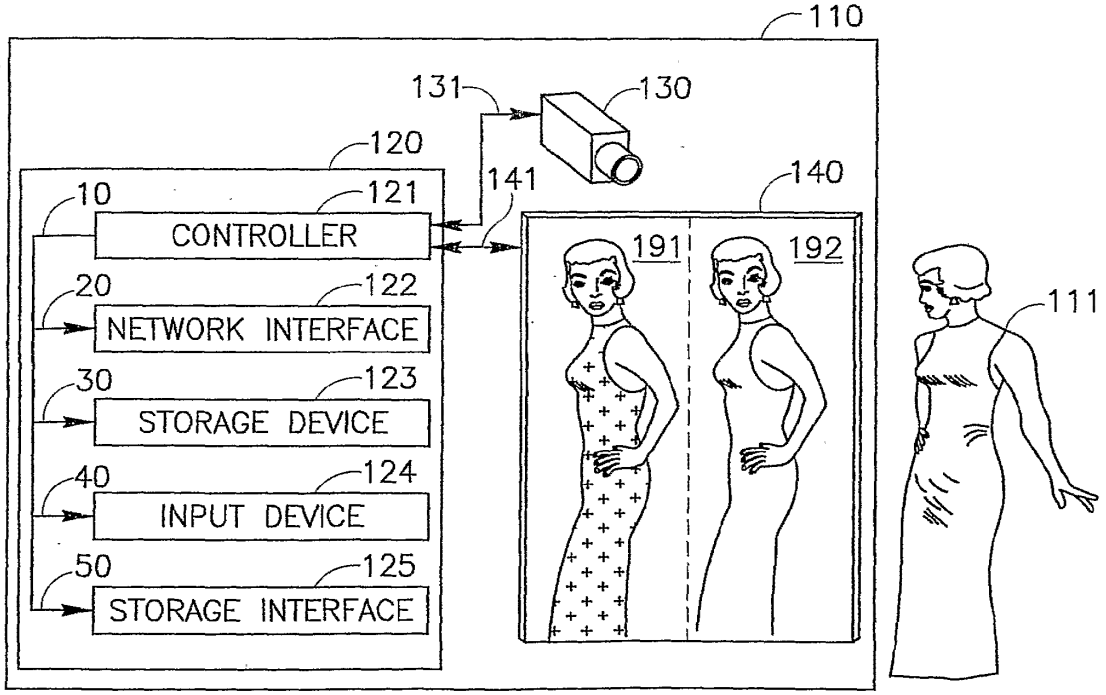
110
131
130
120
141
140
10
121
CONTROLLER
191
192
20
122
NETWORK INTERFACE
111
30
123
STORAGE DEVICE
40
124
INPUT DEVICE
50
125
STORAGE INTERFACE

FIG.2B

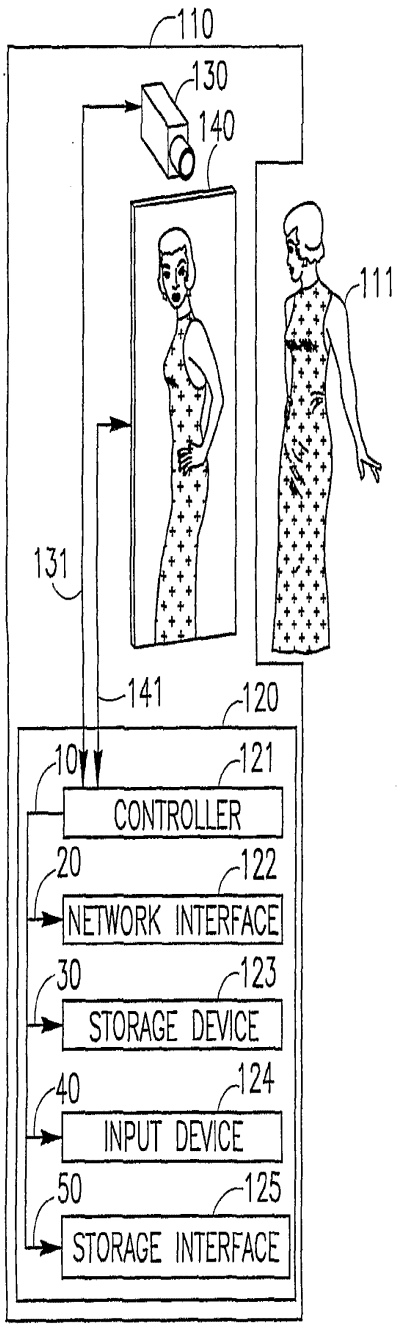

FIG.3A

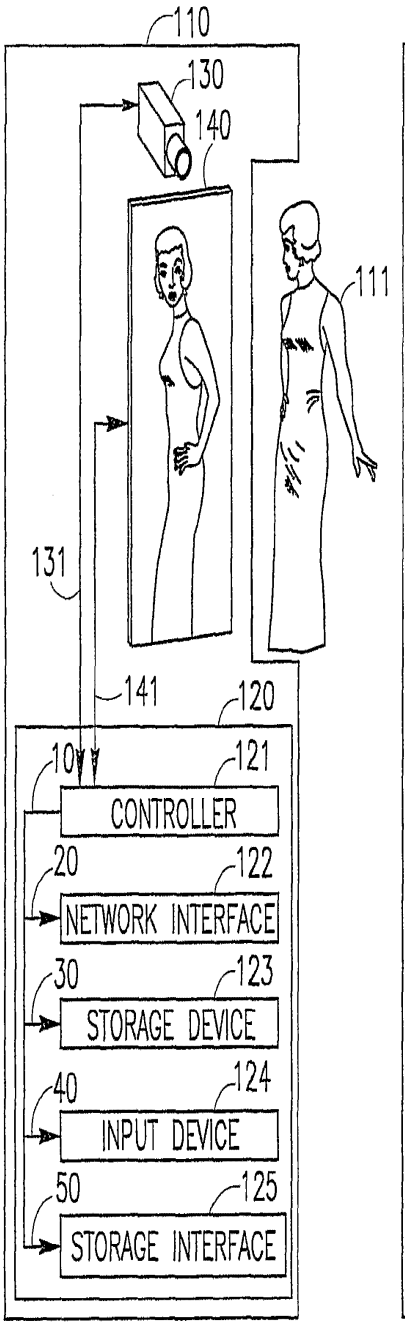

FIG.3B

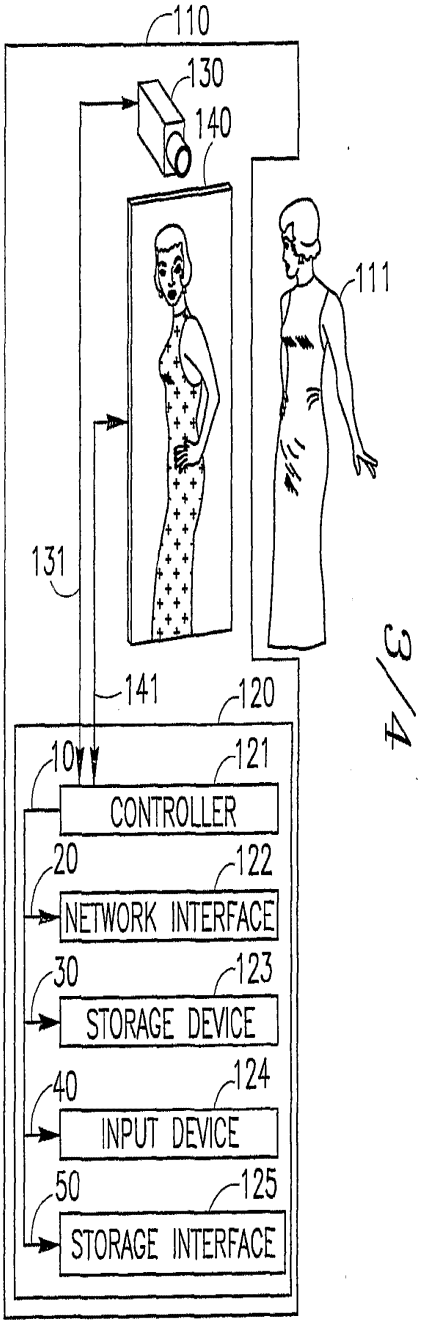

FIG.3C

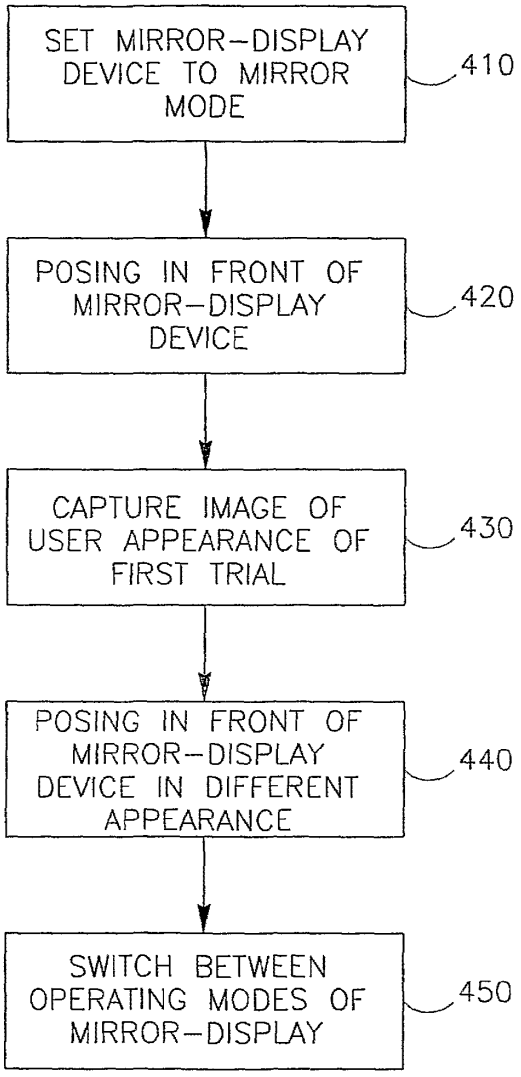
SET MIRROR-DISPLAY DEVICE TO MIRROR MODE
410
POSING IN FRONT OF MIRROR-DISPLAY DEVICE
420
CAPTURE IMAGE OF USER APPEARANCE OF FIRST TRIAL
430
POSING IN FRONT OF MIRROR-DISPLAY DEVICE IN DIFFERENT APPEARANCE
440
SWITCH BETWEEN OPERATING MODES OF MIRROR-DISPLAY
450

FIG. 4

(12) INTERNATIONAL APPLICATION PUBLISHED UNDER THE PATENT COOPERATION TREATY (PCT)

(19) World Intellectual Property Organization
International Bureau

(43) International Publication Date
26 June 2014 (26.06.2014)

WIPO | PCT

(10) International Publication Number
WO 2014/100250 A2

(51) International Patent Classification: *H04N 7/15* (2006.01)

(21) International Application Number: PCT/US2013/076253

(22) International Filing Date: 18 December 2013 (18.12.2013)

(25) Filing Language: English

(26) Publication Language: English

(30) Priority Data:
61/738,957 18 December 2012 (18.12.2012) US
13/843,001 15 March 2013 (15.03.2013) US

(72) Inventors; and
(71) Applicants : **VILCOVSKY, Nissi** [IL/JP]; 2-22-18-501 Ebisu, Shibuy, Tokyo, 150 0013 (JP). **SABAN, Ofer** [IL/US]; 1983 Horse Shoe Drive, Vienna, VA 22182 (US).

(74) Agent: **BACH, Joseph**; Nixon Peabody LLP, P.O. Box 60610, Palo Alto, CA 94306 (US).

(81) Designated States *(unless otherwise indicated, for every kind of national protection available)*: AE, AG, AL, AM, AO, AT, AU, AZ, BA, BB, BG, BH, BN, BR, BW, BY, BZ, CA, CH, CL, CN, CO, CR, CU, CZ, DE, DK, DM, DO, DZ, EC, EE, EG, ES, FI, GB, GD, GE, GH, GM, GT, HN, HR, HU, ID, IL, IN, IR, IS, JP, KE, KG, KN, KP, KR, KZ, LA, LC, LK, LR, LS, LT, LU, LY, MA, MD, ME, MG, MK, MN, MW, MX, MY, MZ, NA, NG, NI, NO, NZ, OM, PA, PE, PG, PH, PL, PT, QA, RO, RS, RU, RW, SA, SC, SD, SE, SG, SK, SL, SM, ST, SV, SY, TH, TJ, TM, TN, TR, TT, TZ, UA, UG, US, UZ, VC, VN, ZA, ZM, ZW.

(84) Designated States *(unless otherwise indicated, for every kind of regional protection available)*: ARIPO (BW, GH, GM, KE, LR, LS, MW, MZ, NA, RW, SD, SL, SZ, TZ, UG, ZM, ZW), Eurasian (AM, AZ, BY, KG, KZ, RU, TJ, TM), European (AL, AT, BE, BG, CH, CY, CZ, DE, DK, EE, ES, FI, FR, GB, GR, HR, HU, IE, IS, IT, LT, LU, LV, MC, MK, MT, NL, NO, PL, PT, RO, RS, SE, SI, SK, SM, TR), OAPI (BF, BJ, CF, CG, CI, CM, GA, GN, GQ, GW, KM, ML, MR, NE, SN, TD, TG).

Published:
— *without international search report and to be republished upon receipt of that report (Rule 48.2(g))*

(54) Title: DEVICES, SYSTEMS AND METHODS OF CAPTURING AND DISPLAYING APPEARANCES

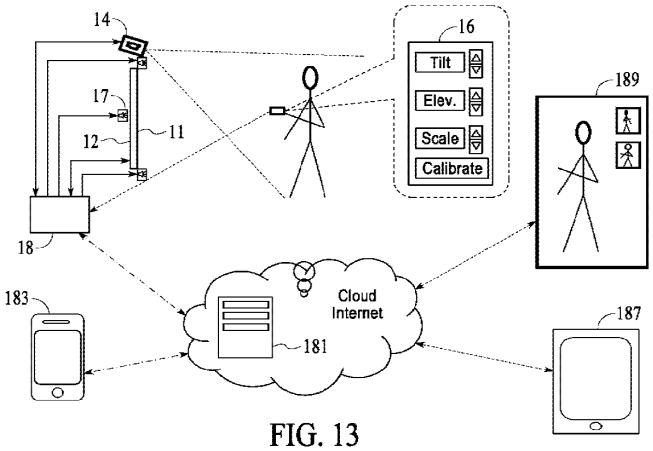

FIG. 13

(57) Abstract: Systems, devices and methods enabling appearance comparison. The system includes at least one interactive imaging and display station. The station includes a mirror-display device capable of selectably operating in either or both a mirror mode or a display mode; an imaging device to capture one or more appearances appearing in a field of view in front of the mirror- display device; and/or an image control unit to select the mode of operation of the mirror-display device according to a user command.

WO 2014/100250 A2

DEVICES, SYSTEMS AND METHODS OF CAPTURING AND DISPLAYING APPEARANCES

CROSS REFERENCE TO RELATED APPLICATIONS

[0001] This application claims the priority benefit of U.S. Application No. 13/843,001, filed on March 15, 2013, and U.S. Provisional Application No. 61/738,957, filed on December 18, 2012. The entire disclosures of the above listed applications are incorporated herein by reference.

BACKGROUND

1. Field

[0002] The invention relates generally to imaging and display systems and, more particularly, to monitors, and interactive displays, e.g., in retail and/or service environments, medical or home situations, video conferencing, gaming, etc. Specific implementations relate to making a flat panel display appear as a mirror. Another specific implementation relates to making a flat panel display provide a video of a person looking at his eyes to create an eye to eye video conference.

2. Related Art

[0003] Customers may shop for consumer articles, for example, apparel such as clothes, e.g., shirts, pants, coats and other garments, as well as shoes, glasses, and/or any other items or products, such as cosmetics, furniture and the like. Shopping normally takes place at a shopping facility, for example, retail stores. Prior to making a decision which article to buy, a customer may try on various articles (e.g., apparel, cosmetics) and/or pose with other background articles (e.g., furniture), and may view for each trial a user-appearance in front of a mirror, which may be located, for example, at a trial area of the retail store. For example, the customer may try on a first article, e.g., a suit, and view for that first trial his/her user-appearance in front of the mirror. Then, the customer may try on a second article, e.g., another suit. The customer may then need to memorize his/her user-appearance from the first trial in order to perform a mental comparison between the first article and the second article, thereby to evaluate which of the two articles might be a better fit for the customer.

[0004] Unfortunately, since the customer may try on numerous articles and/or since the second trial may take place a considerable amount of time after the first trial or even at a different store, the customer may not be able to recall his/her appearance for each trial and may therefore be required to repeatedly retry articles, e.g., items of apparels, previously tried on. This may result in a frustrating and inefficient shopping experience.

[0005] The conventional mirror (i.e., reflective surface) is the common and most reliable tool for an individual to explore actual self-appearance, in real time. A few alternatives have been proposed by prior art around the combination of a camera and a screen to replace the conventional mirror. However, these techniques are not convincing and are not yet accepted as a reliable image of the individual as if he was looking at himself in a conventional mirror. This is mainly because the image generated by a camera is very different from an image generated by a mirror.

[0006] When a user looks at himself in the mirror, what he actually sees is the reflection of himself as if he was standing at a distance that is double the distance from him to the mirror. This is illustrated in Figure 5A, wherein the user standing at distance D1 sees himself at a distance equal to twice D1. Similarly, as shown in Figure 5B, a user standing at distance D2 will see himself at a distance 2xD2. In addition, the angle of the user's Field of View (FOV) changes when the user changes the distance, e.g., gets closer, to the mirror. The FOV is limited by the specular reflecting angle (β) from the mirror to the user's eye and to the edge of the visible image on all sides of the mirror (four sides for a rectangular or square mirror). In Figure 5B the bottom of the vertical FOV is illustrated as double the angle (β) formed by the lines connecting the user's eyes to the bottom of the mirror and reflecting to the user's shoes. Consequently, as illustrated in Figure 5B, when the user approaches the mirror, the FOV angle increases, which is why he continues to see the same size reflection (FOV1 < FOV2), so that the user actually sees himself roughly at the same size, but closer. This is a noticeable difference from a camera, wherein as the user gets closer to the camera, he appears larger in the image. This is mainly because the FOV of a camera is fixed and is determined mainly by the size of the camera lens, or focal length.

[0007] There are other phenomena to note regarding reflection of a mirror. For example, when the user approaches the mirror, the reflection of his eyes will always stay on the same virtual line into the mirror. Conversely, depending on a camera's height, as the user gets closer to

the camera, the user's eyes may appear at different levels. Another difference from a camera is that when one looks at a mirror, one's image appears to be reversed (e.g., if one raises one's right hand, his left hand will appear to go up in the mirror). However, a mirror does not "swap" left and right any more than it swaps top and bottom. A mirror reverses the forward/backward axis (i.e., what's in front of the mirror appears to be behind the mirror), and we define left and right relative to front and back. Also, because the image in the mirror is virtual, the mirror can be smaller than the full body and the user will still see the reflection of his full body. The reason is that the specular reflection (in Figure 5A the angle of incidence β equals to the reflection angle β) can increase the effective field of view while the user approaches the mirror. Moreover, although the mirror is a two dimensional object, the user sees his appearance in three dimensions.

[0008] For at least some of the reasons noted above, so far no system has been provided for imitating a mirror convincingly. Imitating a mirror can have many applications in retail and other fields, and opens the possibility of incorporating real life experiences with virtual life experiences, such as sharing on social networks and other mobile technologies.

SUMMARY

[0009] Some demonstrative embodiments of the invention include devices, systems and/or methods enabling appearance comparison.

[0010] According to some demonstrative embodiments of the invention, a system enabling appearance comparison may include at least one interactive imaging and display station. The station may include, for example, a mirror display device capable of operating in either or both a mirror or a display mode; an imaging device to capture one or more appearances from a field of view in front of the mirror-display device; and/or an image control unit to select the mode of operation the mirror display device according to a user command. The mirror display device may be in the form of a flat panel TV, wherein during mirror mode the TV presents a transposed live video feed from the camera, while during display mode it presents a transposed video taken at an earlier time and fetched from a memory.

[0011] According to some demonstrative embodiments of the invention the image control unit may include an input device to receive the user command.

[0012] According to some demonstrative embodiments of the invention, the image control unit may include a storage device to store data of one or more images which may correspond to one or more appearances.

[0013] According to some demonstrative embodiments of the invention, the mirror-display device may be capable of being partitioned into at least first and second simultaneously-displayable frames. The first frame may be selectably operable, for example, both in a mirror mode and a display mode. The second frame may be operable, for example, in a mirror mode.

[0014] According to some demonstrative embodiments of the invention, the imaging device may be capable of capturing three-dimensional images of appearances.

[0015] According to some demonstrative embodiments of the invention, the mirror-display device may be capable of displaying images of appearances at predefined sequences.

[0016] According to some demonstrative embodiments of the invention, the image control unit may be able to selectively enable a user access to images of appearances authorized to the user, e.g., based on user-identifying data received from the user.

[0017] According to some demonstrative embodiments of the invention, the at least one interactive imaging and display system may include two or more interactive imaging and display stations able to communicate over a network. For example, the two or more stations may be able to communicate between each other data representing images of appearances.

[0018] According to some demonstrative embodiments of the invention, the image control unit may control the mirror-display device to display, e.g., during the display mode, one or more images corresponding to the appearances. The one or more images may include, for example, one or more mirrored appearances. The mirrored appearances are obtained by transposing the images or video feed obtained from a camera to generate images and video that, when presented on a monitor, resembles an appearance in a mirror.

[0019] According to some demonstrative embodiments of the invention, a method enabling appearance comparison may comprise using a mirror mode of operation of a mirror-display device capable of being selectably operated in either a mirror or a display mode; capturing an image corresponding to an appearance of a first trial in front of the mirror-display device; storing the image of the first trial; selecting the display mode of operation of the mirror-display device; and/or retrieving the image of the first trial and displaying the image on the mirror-display device.

[0020] According to further embodiments, methods and apparatus are provided utilizing a camera and a flat screen display to create a convincing mirror appearance.

BRIEF DESCRIPTION OF THE DRAWINGS

[0021] The subject matter regarded as the invention is particularly pointed out and distinctly claimed in the concluding portion of the specification. The invention, however, both as to organization and method of operation, together with features and advantages thereof, may best be understood by reference to the following detailed description when read with the accompanied drawings in which:

[0022] FIG. 1 is a schematic illustration of an interactive system enabling appearance comparison in accordance with some demonstrative embodiments of the invention;

[0023] FIGS. 2A and 2B are schematic illustrations of two, sequential, stages of appearances comparison using an interactive system in accordance with some demonstrative embodiments of the invention; and

[0024] FIGS. 3A, 3B and 3C are schematic illustrations of three, sequential, stages of appearances comparison using an interactive system in accordance with some demonstrative embodiments of the invention; and

[0025] FIG. 4 is a schematic flow chart of a method enabling comparison of one or more user-appearances in accordance with some demonstrative embodiments of the invention.

[0026] FIGS. 5A and 5B schematically illustrate mirror reflection.

[0027] FIG. 6 illustrates an embodiment having one camera or multiple cameras in a vertical array at the user's eye level, so as to obtain low image distortion.

[0028] FIG. 7 is a schematic illustrating what happens when the user approaches the mirror or moves away from it when using a camera mounted above the screen and pointed horizontally.

[0029] FIG. 8 is a schematic illustrating a system wherein the camera is positioned above a monitor screen and is tilted downwards.

[0030] FIG. 9 is a block diagram of an embodiment of the invention which performs image transformation to generate an image that mimics a mirror.

[0031] FIGS 10A and 10B are schematics illustrating calibration processes according to embodiments of the invention.

[0032] FIG. 11 is a block diagram illustrating a process according to an embodiment of the invention.

[0033] FIG. 12 is a block diagram illustrating modules and processes to perform the calibration and image transformation according to an embodiment of the invention.

[0034] FIG. 13 illustrates another embodiment, wherein calibration and transformation mapping is performed in the field after installation of the system.

[0035] FIG. 14 illustrates an embodiment for extracting data from the image of camera.

[0036] FIG. 15 illustrates an embodiment wherein stitching of images from n cameras is performed.

[0037] FIG. 16 illustrates an embodiment for presenting the eyes to their fullest, mimicking the user looking directly at himself in the mirror.

[0038] It will be appreciated that for simplicity and clarity of illustration, elements shown in the figures have not necessarily been drawn accurately or to scale. For example, the dimensions of some of the elements may be exaggerated relative to other elements for clarity or several physical components included in one element. Further, where considered appropriate, reference numerals may be repeated among the figures to indicate corresponding or analogous elements. It will be appreciated that these figures present examples of embodiments of the present invention and are not intended to limit the scope of the invention.

DETAILED DESCRIPTION

[0039] In the following description, various aspects of the present invention will be described. For purposes of explanation, specific configurations and details are set forth in order to provide a thorough understanding of the present invention. However, it will be apparent to one skilled in the art that the present invention may be practiced without the specific details presented herein. Furthermore, some features of the invention relying on principles and implementations known in the art may be omitted or simplified to avoid obscuring the present invention.

[0040] Some demonstrative embodiments of the invention may include an interactive system enabling a user to compare one or more appearances, for example, to compare between different appearances, e.g., as described in detail below.

[0041] The term "user-appearance" as used herein may relate to the appearance of a customer while trying a consumer article. The article may include, for example, apparel, such as clothing, shoes, glasses, garments, ties, and the like; an article, e.g., furniture, located in the vicinity of the customer; as well as other items, articles, designs or products such as, for example, cosmetics, headdresses, haircuts, etc. Similarly, embodiments may be employed to technical usage, for example, for Fashion designers that want to see versions of designs, it can be for use by people at home who are creating a lifelong album of family members in real size, etc.

[0042] According to some demonstrative embodiments of the invention, the system may include an imaging device able to capture user-appearances and a mirror-display device, able to operate selectably as a mirror or as a display. When in the mirror mode, the mirror-display device may enable the user to evaluate and/or view a user-appearance of a current trial of a consumer article. As will be described further below, this can be done using live video feed to a flat panel display, wherein the video feed is modified prior to presentation on the screen, such that it emulates a mirror. When in the display mode, the mirror-display device may enable the user to evaluate and/or view one or more user-appearances, e.g., as previously captured by the imaging device, of a previous trial, e.g., as described in detail below.

[0043] Reference is made to FIG. 1, which schematically illustrates an interactive system 100 in accordance with some demonstrative embodiments of the invention.

[0044] According to some demonstrative embodiments of the invention, system 100 may include an interactive imaging and display station 110, which may include an image control unit 120, an imaging device 130 (e.g., a still or video camera), and a mirror-display device 140 (e.g., a flat panel display). Image control unit 120 may include a controller 121, a network interface 122, a storage device 123, an input device 124, all of which elements are described in detail below.

[0045] Aspects of the invention are described herein in the context of demonstrative embodiments of an imaging device, e.g., imaging device 130, a mirror-display device, e.g., mirror-display device 140, and/or an image control unit, e.g., image control unit 120, being separate units of an appearance comparison system, e.g., system 100. However, it will be appreciated by those skilled in the art that the invention is not limited in this respect, and that according to other embodiments of the invention, the system may include any suitable configuration, combination, and/or arrangement of the imaging device, the mirror-display device,

and/or the image control unit. For example, the system may include an integrated module including the mirror-display device, the imaging device and/or the image control unit. For example, the imaging device and/or the image control unit may be implemented as integral part of the mirror-display device.

[0046] According to some demonstrative embodiments of the invention, mirror-display device 140 may be configured and/or may include components and mechanisms allowing mirror-display device 140 to operate selectably in two modes of operation. In a first mode of operation (the "mirror-mode"), mirror-display device 140 may operate as a mirror. In a second mode of operation (the "display mode"), mirror-display device 140 may operate as a display. When mirror-display device 140 operates in the mirror-mode, a user 111 of system 100 may evaluate and/or view a user-appearance of a first trial of a consumer article, as may be reflected by mirror-display device 140 in real time. Imaging device 130 may capture an image of the user-appearance of the first trial. The captured image may be stored, for example, by storage device 123, e.g., as described below. User 111 may then pose in front of mirror-display device 140 trying a second article, and imaging device 130 may capture a second image of the user-appearance of the second trial. The user may be able to view the second article in real time using the mirror-display device 140 set to mirror mode. When the mirror-display device 140 is switched to the display mode, mirror-display 140 may be controlled to display one or more of previously captured images. By virtue of the capability of mirror-display device 140 to operate selectably in the mirror or display mode, user 111 may be able to compare simultaneously or sequentially between the user-appearances of the first and second trials, as described in detail below.

[0047] In some demonstrative embodiments of the invention, e.g., as shown in FIGS. 1, 2A, 2B, 3A, and/or 3B, controller 121 may control device 140 to display, during the display mode of operation, a mirror-image of the appearances. However, it will be appreciated by those of ordinary skill in the art that the invention is not limited in this respect, and that in other embodiments the controller may control device 140 to display, during the display mode of operation, any other image corresponding to the appearance, e.g., a rotated appearance, a revered appearance, a substantially non-altered, e.g., frontal, appearance, a rendered appearance, and the like, e.g., as described below.

[0048] Device 140 may include any suitable configuration and/or mechanism to enable selectably operating mirror-display device 140 in the first and second modes of operation. For example, in one embodiment device 140 may include an array of liquid crystal (LC) elements, which may change their optical attributes such as, e.g., reflectivity, refractive index and the like, depending on, for example, a voltage applied to the liquid crystals. For example, applying a first voltage may result in changing the optical attributes of the liquid crystals such that mirror-display device 140 may operate as a mirror; and a second voltage may result in changing the optical attributes of the liquid crystals such that mirror-display device 140 may operate as a liquid crystal display.

[0049] In another embodiment of the invention, for example, mirror-display device 140 may include a liquid crystal display (LCD) device embedded in a semi-reflective or one-directional mirror. Accordingly, if the LCD is switched to an inactive mode of operation, mirror-display 140 may passively reflect sufficient light incident thereon to enable the user to view user-appearances at reasonable quality and brightness. In contrast, when the LCD is turned to an active mode of operation, images displayed by the LCD device may be viewed by user 111 because they may be significantly brighter than residual reflections from the surface of the mirror-display. In other embodiments, the system is implemented in a stand-alone computer, without the display itself, such that the purchaser of the system may supply its own display or have configurations where the system is used without screens, but remote controlled by customers mobile devices or tablets, so they can see their appearances in their mobile and remote controlled the recording.

[0050] Also in some cases the camera can be far from the display, for example, in luxury brands they might embed the screen in the wall and put the camera with appropriate lenses in a remote location.

[0051] According to some demonstrative embodiments of the invention, mirror display device 140 may be implemented by a LCD HD ready mirror TV such as, for example, model No. 32PM8822/10 available from Royal Philips Electronics, e.g., as described at the Internet site <http://www.research.philips.com/newscenter/archive/2003/mirrortv.html- >. Such a device may include, for example, a polymer-based organic light-emitting display (OLED). Mirror-display device 140 may include any other suitable device implementing any suitable display technology. For example, device 140 may include a nano-emissive display (NED); a plasma display panel

(PDP); a cathode ray tube display (CRT); a Digital Light Processing (DLP) display; a surface conduction electron emitter display (SED); a Tablet screen; a flat-panel SED; an Organic electronic display; electronic paper; a 3-Dimensional display, e.g., a Hologram display; a thin film resistor (TFT) display; an optical TFT; a Dot Matrix LED screen; an LCD having CCD capabilities, e.g., such that mirror-display 140 may be capable of performing the functionality of imaging device 130; a paintable LCD; a surface-conduction electron-emitter (SED) display; a high definition television (HDTV) display; a rear projector display device, and the like.

[0052] According to some demonstrative embodiments of the invention, imaging device 130 may be adapted to capture one or more appearances from a Field-of-View (FOV) in front of mirror-display device 140. The FOV in front of mirror-display device 140 may include, for example, a field, area, scene, zone, and/or region in front of mirror-display device 140. For example, the FOV may include at least part of a field, area, scene, zone, and/or region captured by mirror-display device 140 when in the mirror mode.

[0053] Although the scope of the present invention is not limited in this respect, imaging device 130 may be or may include, for example, a CCD camera, a video camera, a camera and/or camera set-up enabling capturing of 3D-images, e.g., a stereoscopic camera and the like. A stereoscopic camera may be adapted, for example, to capture a 3-D image of the user-appearance. The stereoscopic camera may include, for example, two lenses having a distance between each other that may correspond to a distance between two human eyes. Accordingly, the stereo camera may be able to simulate human binocular vision, also known as Stereophotography, thereby being able to capture a 3D-image.

[0054] According to some demonstrative embodiments of the invention, station 110 may be a stand alone unit, which may be located at an appearance-comparison area of a desired location, for example, an office, a home, or a retail store, e.g., apparel store.

[0055] According to other demonstrative embodiments of the invention, station 110 may be connected, e.g., via network interface 122, to a network, for example, a network 150, thereby enabling communication between station 110 and one or more other stations affiliated with network 150 such as, for example, station 160 and/or station 170.

[0056] According to some demonstrative embodiments of the invention, station 110 may include a network interface 122, which may be adapted to interact with network 150, to send and receive information from other stations in network 150, as described herein. Such information

may include but is not limited to data corresponding to images of users captured at various stations of system 100, for example, station 160 and/or 170, as well as identifying information of the users to enable secure access to the system, as described in more detail below. Network 150 may include, for example, a local area network (LAN), a wide area network (WAN), a global communication network, e.g., the Internet, a wireless communication network such as, for example, a wireless LAN (WLAN) communication network, a Bluetooth network, a wireless virtual private network (VPN), a cellular communication network, for example, a 3.sup.rd Generation Partnership Project (3GPP), such as, for example, Frequency Domain Duplexing (FDD) network, a Global System for Mobile communications (GSM) network, a Wideband Code Division Multiple Access (WCDMA) cellular communication network, and the like.

[0057] According to some demonstrative embodiments of the invention, one or more of stations 160 and 170 may be portable devices. Non-limiting examples of such portable devices may include a mobile telephone, a laptop computer, a notebook computer, a mobile computer, a tablet computer, a Personal Communication Systems (PCS) device, Personal Digital Assistants (PDA), a wireless communication device, a PDA device which incorporates a wireless communication device, a cellular telephone, a wireless telephone, a smart card, a token, a memory card, a memory unit, and the like. In some embodiments of the invention, one or more of stations 160 and 170 may be non-portable devices such as, for example, a desktop computer, a television set, a server computer, and the like.

[0058] According to some embodiments of the invention, system 100 may also include a control center 190, which may be connected to stations 110, 160 and/or 170, e.g., via network 150. Control center 190 may receive and store data, which may represent, for example, data and/or images of user-appearances, received from one or more of stations 110, 160 and/or 170.

[0059] According to some embodiments of the invention, stations 110, 160 and/or 170 may be located at different locations such as, for example, different stores of a retail chain. In addition, stations 110, 160 and/or 170 may be located at different locations within a building, e.g., different floors, different sections at the same floor and the like. Such locations may include, for example, clothing stores, shoe stores, points of sale, concept showrooms, exhibitions, shopping malls, eyewear stores, cosmetic stores, sport clubs, health institutes, fitness centers, airports, train stations, coffee shops, restaurants, hotels, homes, and the like. One or more of stations 110, 160 and 170 may also be used for interactive billboard signs. For example,

imaging device 130 may, for example, capture images which may be displayed on a billboard sign (not shown). System 100 may enable user 111 to choose an image to be displayed on the billboard sign out of a plurality of images of, for example, various previous trials of apparel.

[0060] According to some demonstrative embodiments of the invention, images of user appearances may be viewed at different locations. For example, imaging device 130 may capture an image of the first trial. The image may then be sent from network interface 122 via network 150 using signals 151 and 152, for example, to station 160. Accordingly, user 111 may be able to view the image of the first user-appearance at station 160. Therefore, user 111 may be able to view, for example, the user-appearance of the first trial in a first store of a retail store chain, e.g., a store associated with station 110; and may compare the user-appearance of the first trial with a user-appearance of a second trial, which may take place at a second store of the same or an affiliated chain, e.g., a store associated with station 160; and/or at a different time, e.g., one or more hours, days or weeks after the first trial.

[0061] According to another demonstrative embodiment of the invention, imaging device 130 may capture an image of a user-appearance of a first trial, and send the image via network interface 122 over network 150 to control center 190, where the image may be stored for later retrieval. Accordingly, user 111 may gain access to the images of the first trial by accessing any station, e.g., station 160, connected over network 150 with control center 190.

[0062] According to some demonstrative embodiments of the invention, storage device 123 may include, for example, a hard disk drive, a floppy disk drive, a Compact Disk (CD) drive, a CD-ROM drive, a Digital Versatile Disc (DVD) drive, or other suitable removable or non-removable storage units.

[0063] According to some demonstrative embodiments of the invention, controller 121 may be or may include, for example, a Central Processing Unit (CPU), a Digital Signal Processor (DSP), a microprocessor, a controller, a chip, a microchip, an Integrated Circuit (IC), or any other suitable multi-purpose or specific processor or controller, e.g., as are known in the art.

[0064] Input device 124 may include, for example, a keyboard; a remote control; a motion sensor; a pointer device such as, for example, a laser pointer; a mouse; a touch-pad; a touch screen, which may be embedded, for example, in mirror-display device 140, or may be implemented by any other suitable unit, e.g., separate from device 140; a biometric input device, e.g., a fingerprint scanner, and/or a camera for scanning a face; and/or any other suitable pointing

device or input device. Input device 124 may be adapted to receive user-identifying data, for example, to enable, access, e.g., secure access, of user 111 to system 100, as described in detail below.

[0065] According to some demonstrative embodiments of the invention, user 111 may provide user commands to input device 124 for operating the imaging device 130. Input device 124 may include, for example, an interface to enable user 111 of system 100 to define operational parameters of imaging device 130. Controller 121 may receive the inputs from user 111 via signals 131 and control the operation of imaging device 130 accordingly. The user commands may include, for example, commands relating to the timing for capturing an image, the positioning of imaging device 130, e.g., according to an automatic tracking algorithm which may follow, for example, the position of user 111, and/or imaging attributes such as focus, camera position, capturing angle, dynamic range and the like. The user commands may also include commands to define image capturing operating modes of imaging device 130 such as, for example, a video capturing mode, a photographic mode and the like. According to some embodiments of the invention, imaging device 130 may include a sound input device, for example, a microphone and/or a sound output device, for example, a loudspeaker. Accordingly, imaging device may receive audio signals, e.g., voice signals generated by user 111, which may be recorded and stored, e.g., in storage device 123 and reproduce the audio signals through the sound output device. The sound output device may be able to reproduce any other kind of audio signals such as, radio programs, compact disc records and the like.

[0066] According to some demonstrative embodiments of the invention, controller 121 may, for example, set the mode of operation of mirror-display device 140 according to the command received from user 111. For example, if mirror-display device 140 operates in the mirror mode, the user of system 100 may provide input device with a switching command, e.g., by pressing a designated button at input device 124, for switching mirror-display device 140 to the display mode. Controller 121 may receive the input from input device 124 and may control device 140 to switch to the display mode of operation, e.g., using signals 141.

According to some demonstrative embodiments of the invention, imaging device 130 may be mounted in various positions such as, for example, on top, below, or on the side of mirror-display device 140, thereby capturing an image of a user-appearance which may be an image of a

given trial of apparel, an image of user 111 with various articles, e.g., furniture and/or posing with different garments and the like. In some embodiments of the invention, imaging device 130 may capture a user-appearance as it appears in mirror-display device 140, i.e., a mirror-image of the user-appearance. In other embodiments, imaging device 130 may capture the appearance, and controller 121 may generate a mirror-image corresponding to the appearance captured by imaging device 130. For example, storage 123 may store instructions that when executed by controller may result in any suitable method or algorithm of rotating, reversing, and/or mirroring the appearance captured by imaging device 130, thereby to generate image data representing rotated, reversed, and/or mirrored image of the image captured by device 130. According to these embodiments, controller 121 may control mirror-display device 140 to display, during the display mode of operation, the rotated, reversed, and/or mirrored image. In other embodiments, controller 121 may control mirror-display device 140 to display, during the display mode of operation, an image corresponding to the image captured by device 130, e.g., a non-mirrored, non-rotated, and/or non-reversed image. In some embodiments, imaging device 130 may not be visible to user 111, may be located behind display device 140, and/or may be embedded in mirror-display device 140, which may be or may include, for example, a LCD-CCD device capable of both displaying and capturing images. For example, in one demonstrative embodiment of the invention, device 140 may include an array, screen or surface, e.g., including liquid crystals, to perform the mirror-display functionality, e.g., as described above, as well as the imaging functionality of imaging device 130, e.g., device 140 may include a mirror-imaging-display device.

[0067] In some demonstrative embodiments of the invention, one or more of stations 110, 160 and/or 170 may not include image capturing device 130; and/or one or more of stations 110, 160 and/or 170 may not include mirror-display 140. For example, a first station of system 100 may include only imaging device 130, and may not include, e.g., mirror-display device 140. User 111 may use the first station to capture the image of the first trial of the user-appearance, e.g., without being able to view at the first station the resultant image of the first trial. User 111 may later view the captured image of the first trial at another station of system 100, which may include mirror-display device 140.

[0068] According to some demonstrative embodiments of the invention, imaging device 130 may be positioned in a manner enabling capturing of an image and/or a sequence of images,

videos or the like, of a scene taking place in front of mirror-display device 140. Additionally or alternatively, imaging device 130 may positioned in a manner enabling capturing an image reflected from mirror-display device 140. For example, imaging device 130 may be able to capture an image of user 111 posing in front of mirror-display device 140. While posing in front of mirror-display device 140, user 111 may check his appearance of, e.g., a first fitting trial of clothes. According to an input provided by user 111 at input device 124, imaging device 130 may capture the image of the user-appearance which may be, for example, a given trial of apparel, e.g., a garment and the like. It may be noted that trials by user 111 may also include user 111 engaging with various subjects, which may be located in the vicinity of user 111 such as, furniture, studio set-up and the like. Accordingly, imaging device 130 may capture images of user-appearances of, for example, a first trial, a second trial, etc., and may send the respective captured images to storage device 123 via signals 131 and signals 30. User 111 may be able to retrieve the captured image of, e.g., the first trial, at a later time, e.g., following the second or other subsequent trials, and may compare between the first and second or other trial, e.g., as described below with reference to FIGS. 2A, 2B and 2C.

[0069] According to some demonstrative embodiments of the invention, storage device 123 may be adapted to receive data representing images captured by imaging device 130, and to store images of appearances and, more specifically, user-appearances of, for example, given trials of apparel, captured by imaging device 130. Images of given trials of user-appearances may be retrieved from storage device 123, e.g., by controller 121, and displayed by display 140. User 111 may compare between the displayed images, e.g., as described in detail below.

[0070] According to some demonstrative embodiments of the invention, storage device 123 may include data representing, e.g., software algorithms, requiring and/or verifying user identifying data such as user-ID, password, login-time, bio-metric data and the like to enable secure access to station 110, as described in detail below. For example, controller 121 may control mirror-display device 140 to display images corresponding to an identity of user 111, e.g., based on the identity data provided by user 111. For example, user 111 may provide input 124 with user-identifying input, which may include, for example, a biometric input such as face recognition, a hand print, a finger print, an eye print, voice recognition and the like. The user-identifying input may include any other suitable input, for example, a credit card, a personal identification number (PIN), a password, a smart card, a customer card, a club card, or the like.

Controller 121 check, e.g., based on any suitable method and/or algorithm, whether the user-identifying input provided at input device 124 matches with user-identifying data which may be stored, e.g., in storage device 123 or in control center 190. Software having the capability of verifying a biometric input may be, for example, "Active ID FaceVision technology" provided by Geometric Inc. If controller 121 matches the input of user 111 with the stored user-identifying data, controller 121 may enable user 111 to access data representing, for example, images of previous user-appearances of user 111.

[0071] According to some demonstrative embodiments of the invention, storage device 123 may include data representing, e.g., software algorithms enabling additional system features such as, for example, rendering virtual effects on mirror-display device 140. For example, controller 121 may be able to render an image at mirror-display device 140 of user-appearances engaged and/or combined with virtual articles such as, for example, clothes, collections, headdresses, hair cuts, furniture and the like. In addition, controller 121 may be able to render an image at mirror-display device 140 of user-appearances having different body shapes for simulating, e.g., weight loss, weight gain of user 111 and the like. For example, user 111 may choose in a first trial a specific article, such as a suit out of a collection and controller 121 may virtually adjust the collection to an image of user 111 appearing in mirror-display device 140. Controller 121 may store the image of the first trial in storage device 123 and may perform the same step at a second trial. Accordingly, user 111 of system 100 may be able to compare between user-appearances of the first and a second trials of the collection.

[0072] According to some demonstrative embodiments of the invention, controller 121 may provide, for example, image and/or video browsing capabilities, image and/or video replay functions, which capabilities and functions may be predefined by system 100 or may be defined, e.g., on-the-fly, according to one or more user commands received from user 111 via input device 124. For example, controller 121 may be able to retrieve one or more images of previous user-appearances and display the images on mirror-display device 140 at various sequences. For example, images from previous trials may be displayed in a substantially continuous forward, backwards, or mixed, e.g., randomly-accessible, sequence, and/or may be a stepwise sequence or in any other sequence. Furthermore, images from previous trials may be displayed simultaneously at mirror-display device 140, e.g., as described below. Controller 121 may also be able to delete previously captured user-appearances, limit the amount of data which may be

saved in storage device 123 and the like, and may further control a shape, size, color, etc., of the image displayed on mirror-display device 140.

[0073] According to some demonstrative embodiments of the invention, user 111 may use a portable storage device 180 able to store one or more of the captured images. The portable storage device may include any suitable portable storage device, e.g., a smartcard, a disk-on-key device, and the like. User 111 may download, for example, images represented by, e.g., signals 50, of a first trial of user-appearances from storage device 123, e.g., via a storage interface 125 or via any other suitable data connection. User 111 may then upload at a later time the image of, e.g., the first trial, to another location, e.g., a home of user 111, or another station of system 100, e.g., station 170.

[0074] In some embodiments of the invention, station 110 may include more than one mirror-display device or may include a mirror-display device 140, which may be partitioned simultaneously into two frames as described hereinafter with reference to FIGS. 2A and 2B.

[0075] According to some demonstrative embodiments of the invention, controller 121 may record or store, e.g., in storage 123, parameters characterizing user 111. For example, system 100 may include a weighing machine, connected to, e.g., storage device 123 via controller 121. Controller 121 may be able to record, for example, a weight of user 111 during, for example, a trial of an article. Accordingly, user 111 may later retrieve the parameter which may be, for example, the weight of user 111.

[0076] Reference is now made to FIGS. 2A and 2B, which schematically illustrate stages of comparing between appearances using an interactive system in accordance some demonstrative embodiments of the invention.

[0077] According to some demonstrative embodiments of the invention, mirror-display device 140 may be partitioned into two frames, wherein one frame may operate as a mirror frame 192 and another frame 191 may operate selectably as a mirror and as a display frame. As shown in FIG. 2A, user 111 may pose in front of mirror frame 192 a first trial, which may be captured by imaging device 130 and stored in storage device 123. Henceforward, as indicated in FIG. 2B, user 111 may view simultaneously in frame 191 the image of the user-appearance of the first trial and/or any other user-appearances, e.g., user-appearances stored in storage device 123 and/or received over network 150 (FIG. 1), side-by-side with the normal mirror appearance of a second trial in frame 192, and compare between the first and the second trial.

[0078] Reference is now made to FIGS. 3A, 3B and 3C, which schematically illustrate three, sequential, stages of comparing between appearances using an interactive system in accordance some demonstrative embodiments of the invention.

[0079] As shown in FIG. 3A, the user of system 100 may view a first trial of a user-appearance in mirror-display device 140 operating in its mirror mode. Controller 121 may receive, e.g., from input device 124, a user input, which may include a request to use imaging device 130 for capturing a first trial of the user-appearance. As a result, imaging device 130 may capture an image of the first trial of the user-appearance and storage device 123 may store the captured image.

[0080] As shown in FIG. 3B, user 111 may view a second trial of his user-appearance in mirror-display device 140, which may operate in the mirror mode of operation. Then, when user 111 desires to view a previous appearance, e.g., for comparison, controller 121 may receive a user input via input device 124 requesting to view the first trial. At this point, as shown in FIG. 3C, controller 121 may change the operational mode of mirror-display device 140 to the display mode using signals 141. Controller 121 may also control device 140 to display the first trial. Therefore, by switching between operating modes of mirror-display device 140, user 111 may compare the user-appearance of the second trial with the user-appearance of the first trial and/or any other user-appearances previously stored in storage device 123.

[0081] Reference is now made to FIG. 4, which schematically illustrates a flow-chart of a method enabling comparing between one or more various appearances in accordance with some demonstrative embodiments of the invention. Although the invention is not limited in this respect, one or more operations of the method of FIG. 4 may be performed by one or more elements of system 100 (FIG. 1).

[0082] As indicated at block 410, the method may include, for example, setting the operating mode of a mirror-display device. For example, user 111 (FIG. 1) may initially set the operating mode of mirror-display device 140 (FIG. 1) to the mirror mode. Alternatively, display 140 (FIG. 1) may be designed to operate in the mirror mode by default whenever a new user logs into system 100 (FIG. 1).

[0083] As indicated at block 420, the method may also include, for example, posing in front of the mirror-display device. For example, user 111 (FIG. 1) may pose in front of mirror-

display device 140 (FIG. 1) and check the user-appearance of a first trial of, e.g., clothing, shoes and/or any other apparel.

[0084] As indicated at block 430, the method may also include, for example, capturing an image of the user-appearance of the first trial. For example, user 111 (FIG. 1) may provide user command to device 120 (FIG. 1) commanding imaging device 130 (FIG. 1) to capture an image of the user-appearance of the first trial.

[0085] As indicated at block 440, the method may also include, for example, posing in front of the mirror-display device in a different user-appearance. For example, user 111 (FIG. 1) may change one or more items of environment such as, for example, furniture and/or apparel, pose once again in front of mirror-display device 140 which may operate in mirror mode, and view a second user-appearance.

[0086] As indicated at block 450, the method may also include, for example, switching between operating modes of the mirror-display device. For example, user 111 (FIG. 1) may switch mirror-display device 140 (FIG. 1) between the mirror and the display mode. Accordingly, user 111 (FIG. 1) may be able to compare between the user-appearance of the first trial, and/or any other user-appearances, e.g., user-appearances stored in storage device 123 and/or received over network 150 (FIG. 1), and the user-appearance of the second trial.

[0087] According to some demonstrative embodiments of the invention, user 111 (FIG. 1) may indicate, and/or station 110 (FIG. 1) may be able to store, e.g., automatically, for each trial parameters, e.g., including shopping parameters, such as, for example, name of store, address of store, price, time and/or date of trial of apparel, name of salesperson, and the like. User 111 (FIG. 1) may, for example, store the captured images of user-appearances in a removable or portable storage device, e.g., as described above with reference to FIG. 1, and may later review images of user-appearances while being able to ascribe every image to, e.g., a specific store and the like. In addition, user 111 may define, and/or controller 121 (FIG. 1) may be able to generate, and/or store in storage device 123 reminders, for example, alarms about, e.g., discounts, end of season sales and the like.

[0088] We now present discussions relating to embodiment of using an image captured by a camera, e.g., a digital still or video camera, and manipulating the image such that when it is projected on a screen it resembles a mirror image, i.e., an image the user would have seen if the screen was actually a standard mirror.

[0089] Figure 6 is a schematic illustration for an understanding of the following embodiments, which includes a digital screen 640, a camera 630, and a computerized image processor 645, that could create a convincing mirror experience. In an ideal situation, the camera would be able to move on a parallel plane behind the screen, in correspondence with the user's eye location to create a convincing eye-to-eye look experience. However, it is not practical to locate a camera behind a regular screen, simply because it will block the camera's view. In theory, it is possible to overcome this problem by using a semitransparent screen or multiple pinholes with multiple cameras, though it may be too expensive and complex to implement. A simpler solution is to place the camera above the display screen and manipulate the captured image so as to mimic a mirror. Examples for the appropriate manipulations are provided below.

[0090] An adaptive FOV is required in order to compensate for the changes in the distances between the user and the screen, so that the user will see his image at the same size, just like in a mirror. According to one embodiment, this is solved by using the camera's zoom (digital and/or mechanical). Traditional cameras have fixed FOV or mechanically tunable FOV. In order to create an adaptive, i.e., continuously variable, FOV the system needs to manipulate the resolution, or to control the camera zoom and focus in real-time, based on user tracking.

[0091] Additionally, the image needs to be flipped vertically, to support the right-to-left behavior of the mirror. This image transformation may be performed relatively easily by manipulating the pixels addresses of a digital image.

[0092] As explained with respect to Figure 1, the mirror can be smaller than the user and still show a full body reflection. This can be achieved in combination of proper selection of FOV and proper selection of the size screen. The idea is to project an image on the screen, which has a FOV giving the perception that the user sees a reflection at double the distance to the mirror, such that the entire body is visible even if the digital screen is smaller than the height of the user. This is exemplified by images A, B, and C in Figure 6, showing an image of the user captured at different distances to the mirror, but showing the user's body at the same size by, among others, manipulating the FOV. In some embodiments, the image resolution also changes according to the user's distance to the mirror. For example, for close distances, one embodiment may use an array of cameras and the image manipulator would use stitching to reduce image distortion.

[0093] In order to support three dimensional imaging, the setup will require two cameras at a distance corresponding to the distance between the user's eyes, or one camera with two

effective virtual points of view. A convincing 3D experience will also require the implementation of an adaptive closed-loop method that can change the creation of a 3D image as a function of the distance. When the user looks at his reflection in the mirror he sees himself in 3D, although when he approaches the mirror or walks away, the angle from his eyes to his reflection changes, which also changes the depth of the 3D image.

[0094] As explained with reference to Figure 6, it may be too complex or expensive to place the camera behind the display at eye level. Therefore, in the following embodiments a practical method is provided to implement the ideal system described above with a fixed-mounted camera/cameras located at the perimeter of the screen and facing the user. The main challenge is how to compensate for the image distortions adaptively and in real time, so as to create similar user experience as we would get in the ideal setup. Figures 7 and 8 show some examples of the challenges of using the practical setup with the camera placed above the digital screen, i.e., not corresponding to the user's eye level.

[0095] Figure 7 depicts what happens when the user approaches the mirror or moves away from it when using a camera mounted above the screen and pointed horizontally. Assuming the system is calibrated to central dynamic range, when the user is far the image is smaller and higher (scenario C in figure 7) and when the user is closer to the screen (scenario A) the image of the user is larger and the FOV of the camera cuts the image of the user. Additionally, when the user approaches the screen, a projection distortion becomes noticeable, meaning that the user will not feel as if he is looking at himself in a mirror.

[0096] To enable capturing the entire body of the user at any distance, in one embodiment the camera is located at the top of the screen and tilted downwards to allow maximum dynamic range of the user's movement in front of the screen. As depicted in Figure 8, because the camera is tilted downwards, the projection distortion is much larger and noticeable. The closer the user is to the camera, the more distorted his image becomes. The nature of the distortion is mainly projection distortion – the user look shorter and the upper body looks larger. In this configuration the image of the user also got smaller as he was further away from the screen. On the other hand, the effective/usable FOV of the camera will cover a larger area in front of the screen, and will allow the user to get much closer to the screen and still see an entire body image.

[0097] To enable generating a convincing (augmented) mirror experience from a camera a located in front of the user and in spatial offset from the screen, a computerized method is used to manipulate the captured image prior to its presentation on the screen. The computerized method may operate in real time or not in real time, depending on the operational mode of the screen.

[0098] The computerized method receives as an input the image captured by the camera and performs a transformation of the image to correct the point of view and field of view of the camera to fit with the view point that would occur with a conventional mirror. That is, when the user moves closer or further from the mirror, the view point that would have been reflected in the mirror would have been different from that captured by the camera. Embodiments of the inventive computerized method incorporate an adaptive POV (point of view) and Adaptive FOV modules based on tracking the position of the user.

[0099] Specifically, attempting to solve the virtual mirror problem by only flipping the image vertically as was proposed in the prior art is insufficient to create a mirror experience. When using a camera, once the user gets closer to the camera/screen the user's image becomes larger, and vice versa, as opposed to a conventional mirror where the user will always see himself roughly at the same size with a bit of a different FOV, regardless of his distance from the mirror. In addition, getting closer to the camera introduces image distortion that needs to be corrected in a much more advanced computerized method. Performing an adaptive POV and adaptive FOV prior to displaying the image on the screen results in an image that mimics a reflection of a mirror positioned at the location of the screen. Moreover, to obtain an even more convincing mirror experience, the following features may also be incorporated.

[00100] According to one embodiment, the computerized method further performs dynamic adaptive image stitching of images obtained from a plurality of cameras. According to this embodiment, the system incorporate multiple cameras, e.g., positioned at different locations and/or based on multiple technologies/characteristics, so as to improve the image resolution, accuracy of the image, extend the FOV of a single camera, reduce distortion for different users and different orientation of user, and create a better model for the user body mesh to compensate the camera's distortion. For example, because the image loses resolution as the user moves away from the screen (fewer pixels capture the user's image), it make sense to optically zoom and refocus the camera. The problem is that it comes at the expense of shrinking the camera's FOV.

In order to improve resolution while maintaining FOV, a stitching or dynamic zoom can be implemented concurrently.

[00101] As mentioned in the preceding paragraph, to properly convey a mirror experience, the system may further implement an adaptive optical zoom. The adaptive optical zoom enhances the image/video's quality/resolution, based on distance tracking, i.e., continuously tracking the distance to the user. In addition, it reduces the asymmetric distortion that can occur if the camera is mounted on the side of the screen.

[00102] In order to ensure the accuracy of the image transposition, the platform can be calibrated in discrete pointers and the computerized method can interpolate and extrapolate the correct transformation on different positions in front of the screen. According to one embodiment, the projection distortion can be calculated in an analytical way based on user tracking and camera location. According to another embodiment, the image distortion is measured in front of the screen, and this measurement information is used instead of direct projection calculation.

[00103] The computerized method is optimized to reduce delay as much as possible by using, e.g., parallel computing and/or calculating the transformation per distance beforehand offline, such that when a distance to a user is measure, the mapping transformation is ready upfront. According to another embodiment, a straightforward approach is used without calibration, by analytically creating a projection transformation per user's calculated/measured point of view.

[00104] The following is a high-level description of the modules that together provide the mirror image transformation. The video acquisition module performs: grabbing the video, making video enhancements, camera optimization setting and control to get the best video quality under the available hardware limitations. The geometric measurements module measures or estimates any combination of distance to the user, the user height, identifies eye position and head pose, performs 3D body mash estimation, etc. The camera control module sets the camera for image/video quality and max resolution. In case of multiple cameras, optimization on FOV to get the max resolution will be done based user distance from each camera.

[00105] The geometric transformation module takes the video frame by frame, and the relevant user geometrical position/orientation information, and maps the raw images to the correct location and fills the blind pixel if there are any. For example, the geometric

transformation is performed to match the eyes as if the user is looking at the mirror. That is, the computerized method calculates the right geometric transformation to distort the input video such that the user will look at himself and will feel that he is looking at his own eyes. This transformation is useful in other situation as well. For example, when performing video conference using computers, since the camera is positioned above the computer monitor or screen, the resulting image always shows the user looking downwards, since the user is actually looking at the computer monitor and not at the camera. Using the disclosed geometric transformation is such a situation would result in an image of the user as if he was looking at the camera, when in fact he is still looking at the screen. This would result in a more personalized conference environment. In the video conferencing application the geometric correction is similar to the mirror application though flipping image left right is not required.

[00106] The mapping transformation module can be implemented using various embodiments. According to one embodiment, a scaling approach is used, wherein geometric assumptions are used to make scaling correction per distance to the user, so as to match the size of the image that the user would see in a mirror. According to another embodiment, an image projection and scaling approach is used, wherein based on user distance, spatial offset and eyes location per distance and offset, projection transformation error between user/user-eyes and camera location is calculated or measured. Additional transformation can be made to correct optic distortion.

[00107] According to yet another embodiment, a registration approach is used, which has been shown to provide rather accurate results. According to this approach, the transformation is pre-programmed based on offline true registration technique of raw image from offset/projected/back oriented camera to an image that was taken in front of the user when the user eyes are staring at the camera. Reference image can be generated from one multiple cameras with stitching. For example, a reference camera will be located in a similar height and distance that will reduce most optic distortion, e.g., at eye level and 2-3m from the user. The registration will yield the best transformation to match the eyes and the full body based on multiple pointers. In one example, multiple pointers, e.g., white dotes, on a 2D or 3D calibration target, e.g., human/doll target will form a two-dimensional grid around central body. For example, circular stickers can be placed on the legs, on the chest, on the shoulders, on the eyes, etc. To improve accuracy, this registration can be repeated for multiple user locations/positions in front of the

screen to account for, e.g., multiple spatial offsets from broadside, multiple heights, multiple distances, etc. For each location, the best mapping possible is created, assuming multiple distortions (projection, barrel, fisheye, or any combination, etc.) that can be corrected with multiple registration techniques (e.g., projection, affine transformation, similarity, polynomial, or any combination, etc.).

[00108] The above-described embodiments can be implemented in conjunction with the following further enhancement. Image stitching can be used with multiple cameras that are located so as to improve resolution quality, to minimize distortion from single camera, or to increasing field of view. Image stitching element will be integrated stitching based on user geometric location. Each camera will have its own transformation correction since the offset relative to the virtual eye location will be different. The multiple cameras can also be used to generate three dimensional view to improve the user experience.

[00109] A three-dimensional infrared (3D IR) image can also be generated. Such an image can be used to generate an accurate virtual model of the user, which can then be used to allow API for virtual dressing and augmented reality. Using augment reality, one can change the background, insert objects, perform virtual dressing of different clothes, etc. This may also be used to analyze the user body language and link it with the augmented reality applications, virtual dressing applications, gaming, video conferences, etc.

[00110] Since the system records the image, either still or video, various analytics can be performed on the images. For example, video analytics and/or store analytics can be used to collect information on the user or the store performance, e.g., how many times he smiled, did he enjoy the experience, estimated age, sex, ethnic origin, etc. Various inputs can be used for behavioral analysis platform that can help to integrate the eComerce into the real try-on experience, or as add on to any other application. For example, the system can analyze the user try-on item/items and linked it with the shop inventory, 3D printing, and the eComerce web, eComerce stylist, social network, etc.

[00111] Reference is now made to Figure 9, which is a block diagram of an embodiment of the invention which performs image transformation to generate an image that mimics a mirror. The various modules of the system illustrated in Figure 9 can be implemented on programmed general purpose computer, DSP, CPU, GPU, Camera DSP/ASIC, Screen DSP/ASIC, standalone computing device, FPGA card, DSP device, ASIC, cloud parallel computing, etc.

[00112] Block 930 represents one or more cameras 1:n, which stream the images to the image grabber module 932. Block 930 may include still and/or video cameras, IR camera, two and/or three-dimensional camera arrangements. A range finder, e.g., electroacoustic or electronic range finder, may also be included.

[00113] The image grabber module 932 captures the streamed images from block 930, and may apply filters to improve the image quality. Additionally, it may perform cropping or image resizing as needed for optimization of the image. If multiple cameras are used, the grabber module 932 applies image stitching as needed for better quality or wider effective field of view.

[00114] The trigger event module 960 is a parallel process that can get its input directly from the image grabber module 932, although it can also get the images after the eyes-match module 934. The input can be optimized in size, bandwidth and rate to perform the required functionality. Examples of elements that can reside in the trigger event module 960 include the following. Identify that a user is standing in-front of the camera 930, e.g., based on background subtracting and changes in a predefine zone, pattern recognition, etc. Measure the distance to the user by, e.g., correlation between stereo cameras, 3D IR camera, etc. According to another embodiment the distance to the user is estimated using a single camera measurement, by making some geometrical assumption, e.g., the user is roughly standing in front of the mirror and on a flat floor, so that the distance, the user height or the user theoretical point of view in a mirror, for example, can be deduce from measuring the location of the user's shoes and the user's special offset from the screen broadside.

[00115] A face recognition module may be included in order to ease the user interface identification. In operation, after registration the platform should save the information for each user, and once the user is recognized by the system, the system can upload the user's data, make updates, suggest items, etc. With face recognition the user doesn't have to identify himself, which saves time and enhances ease the use. The face recognition can be the trigger event for automatic recording of the apparences. In some embodiments, the length of the recording of each session is pre-defined and may start once the face recognition is successful. In other embodiments remote control technics can be used as trigger, such as a function in a mobile application or dedicated tablet/mobile/other remote control devices.

[00116] Other elements that can reside in the trigger event module 960 include video analytics (to create meaningful feedback, e.g., estimate age, sex, mood, other popular items,

etc.), item recognition (so that the system can easily link the try-on items into the store, enhance inventory and eComerce platform for better recommendation and faster checkout and inventory planning), and gesture identification (for seamless user control without an input device).

[00117] The eyes-match transformation module 934 performs the image transformation prior to display on screen(s) 940. It gets as an input the image from the grabber module 932, and in addition, may receive the calculated distance or distance and height or actual user point of view. The eyes-match transformation module 934 calculates the required mapping. The required mapping can be calculated directly based calculation of the projection angle difference between camera and user theoretical point of view, e.g., matching the required image scale and positioning. Alternatively, a true-match approach that utilizes factory calibration process can be used to create a very accurate transformation between the camera and calculated point of view at discreet locations in-front of the mirror. Additionally, the base images and transformation that created per other one or more parameters, for example, distance, height, pose, measurements done in the factory, or real time when the user is standing in front of the screen, may also be used.

[00118] Based on user distance or the combination of user distance and eyes point of view, the eyes-match transformation module 934 creates interpolation of the transformation at any location in front of the camera. Since the distance of various parts of the user's body to the camera is not uniform, the projection distortion creates effect where closer body parts, like the head, are imaged by more pixels than far body parts, like the legs. Consequently, the user appears with shorted legs and large head, i.e., closer body parts appear larger and further body parts appear smaller. This mapping is not a linear, i.e., each pixel represent different area length and width (dx,dy), so pixel filling/under sampling decimation will have to be performed to maintain the axis proportion. Filling approach can be any interpolation (near, linear, cubic, polynomial etc.) or more complex filling from different camera projection. For example, cameras from above and below the screen can complement and better estimate the missing pixels or the correct eye orientation. Additional option is to perform some of the analysis in direct optic (special lens/prism) that will correct most of the projection distortion and will improve the resolution. Some of the resizing issue that affects the quality can also be compensate optically by mechanical zoom.

[00119] An optional virtual dressing/augmented reality module 936 can be included to enhance the user's experience. Module 936 gets its input from the EyesMatch module 934 or from the recording module 938. The EyesMatch module 934 performs a transformation of the image and will be explained in further details below. The EyesMatch module 934 can be used in various applications other than the mirror, such as for video cams, video conferences, etc. In addition, module 936 can get input elements to render from the CPU that maintains an active link with the inventory, a database, a 3D printing, eCommerce data base etc. Using the input data, module 936 can render digital images to be merged with the transposed image. For example, module 936 can be used to change an item's color based on actual try on and available inventory or user customization. It should be appreciated that module 936's rendering is different from regular virtual dressing, in that module 936 performs the rendering on an item that is imaged while on the user's body. Thus, for example, rendering the item in different color does not change the physical appearance of the item that the user is wearing, but only its color. Consequently, the user can feel the actual item on his body, see how it actually effects and changes his body shape and appearance, view actual folds and stretches, etc. Module 936 can also be used to add accessory to actual user's image or add true virtual dressing capability to the platform. Similarly, module 936 can be used to augment the background to change or create different environments to match the item the user wear, e.g., beach background for bathing suit, night club background for night dress, etc.

[00120] The video/stills recording module 938 receives its video/stills from the camera grabber 932 directly, from the EyesMatch module 934, or from the virtual dressing augmented reality module 936. In addition, it gets control signals from the control module 962, that indicates when to start/stop recording, what information to store per user, and on what video/stills to process off line additional transformation/augment, reality/virtual dressing/quality enhancement, etc. The method that can be used for the recording without loading the system resources (CPU/BUS/GPU) can include encoding/decoding capabilities in the GPU cards.

[00121] In addition to having a local copy of the video/images in the Mirror Memory (station), the images can be automatically replicated to a Cloud Service and can be encoded automatically for any necessary size.

[00122] The recording process can also modify the frame rate, the compression, the cropping, /change the formats, and modify video and color effects.

[00123] Other than recording, optionally the system can provide live streaming of the Mirror video. For example, the system will be able to show on the web in real-time streaming from any mirror, meaning that any device will be able to watch the streaming, including mirror to mirror.

[00124] Control module 962 controls the operation of all of the other modules. The control module 962 configures all of the hardware and software elements in the system, including the cameras 930, screen 940, DSP, etc. Control module 962 includes an interface, serving as a link between the local station and the cloud base eComerce 950, other web applications 952, smartphone applications 954, etc. The information that will be recorded on the recording module 938 can be delivered to the user immediately by wireless signals/IR/wire, or can be delivered by the user authorization to a cloud base application like Facebook, Google, or other, or to the company server that can be linked to the eComerce application.

[00125] The factory calibration module 964 is utilized when the transformation relies on actual image transforms. The camera to screen geometry orientation can be determined/measured in the factory, or can be measured in the field, and offsets can match the calibration with the factory condition. In addition, correction can be matched to height or angle of the mirror setup relative to the floor. The calibration process may be implemented as follows. The first step is to create a mirror reference of how the image should look like in the mirror at different discrete distances, special orientation, different eyes reflection location (i.e., theoretical point of view). The reference can be taken in multiple ways:

1. As illustrated in Figure 10A, the camera 14 is located at the location of the "supposed" mirror and at the user's eye height or close to it. A user or a doll with pointers (e.g., white sticker dots 10) is positioned at a distance from the camera, such that it will eliminate most of the camera distortion when looking at the camera. The scaling of the image can be matched and cropped to represent true size of a supposed reflection at a mirror, or slightly smaller. That is, the generated reference image should match the true size of the user on a mirror placed at the camera location, or smaller to fit the screen if preferred (depend on the size of the screen).

2. In Figure 10B, a user or a doll with the pointers is positioned in-front of a conventional mirror 12. The camera is positioned at the location of the user and located at eye level of the user, and images the reflection in the mirror. The reference image can also be taken with an array of cameras, e.g., in front of the user in a vertical line, to eliminate distortion.

Thereafter, the multiple images are stitched to get a uniform image with high resolution and low distortion. Google glasses can also be an option for calibration in this scenario. The user/target with the camera will take a picture of himself in-front of a regular mirror. Since the FOV is fixed, the only thing that needs to be done is resize the image for true size.

[00126] Once the reference image is obtained, another image is taken by placing the camera at its actual service location, e.g., above the screen, which will be referred to herein as the actual image. Then a registration of the reference and actual image is performed, by matching the pointers on the actual image to those of the references image. From the registration information, the transformation that can best bring the distort image to the right eyes and body orientation is extracted. Also, based on actual installation geometry in the field, offsets or correction to the transformation can be added. Based on user distance and eyes point of view, an interpolation of the transformation at any location in front of the camera can be create.

[00127] Figure 11 is a block diagram illustrating a process according to an embodiment of the invention, which can be used in the systems described herein. The process begins at 1100, with a factory calibration procedure, which can be implemented using the followings steps as one example. A calibration target is selected, e.g., a doll, a user, a board etc. Target pointers are then placed on the target, for example stickers 10 illustrated in Figure 10A. The camera is then mounted at its service location, e.g., above the screen and tilted down as illustrated in Figure 8, and is set to capture the maximum range. Snap shots of the target are taken at multiple locations (i.e., distances, heights, literation offsets, etc.). On the other hand, for simplicity, taking images at multiple distances along the central virtual line in front of the screen would suffice. One or more reference images are then obtained by, for example, either of the methods shown in Figures 10A or 10B. As one example, the camera is positioned at eye level at the same location of the screen. Then one or more snapshots of the same target are taken, using the same allocated pointers. If only one image is taken, it should be taken at a reasonable distance to avoid camera distortion. If multiple reference images are taken, they should be taken at multiple distances so as to capture the small changes occurring when user approaches the mirror. Note, however, that if multiple target and multiple reference images are obtained, it would be advisable to take them at the same distances and same positions, to generate better transformations. The reference images can be resized to represent a true size on the screen, i.e., to mimic the size that would be reflected in a mirror positioned at the location of the screen.

[00128] Once the target and reference images are obtained, the distorted target images that were taken from the tilted camera are registered to the reference image(s) using the pointers, so as to represent how the user would appear at a mirror positioned at the location of the screen. The output of the registration is a transformation operator, e.g., a set of pointers, each having two coordinates: one in the input image and one in the reference image. Various transformations can be tested over multiple target and reference images. For example, multiple distortion functions can be applied to get the best matching performance. The principle functions would be projection, resize, XY translation (offset) and left-to-right flip. The best transformation combination is selected and mapping transformation is created for each calibration point. This mapping transformation is the factory calibration according to which live images in the field would be transformed to mimic a mirror image. It should be appreciated that the mapping may include different transformations for each pixel or each section of the live image, so as to provide the best representation of a mirror reflection.

[00129] As can be understood, step 1100 can be implemented in the factory, prior to shipping the system. On the other hand, this procedure may also be done in the field, especially when the camera and the screen are provided as separate elements, such that in different situations the camera may be positioned at different locations with respect to the screen. In such circumstances, it may be beneficial to supply the system with a calibration target, e.g., a doll (3d target) or board with calibration markings (2d target) , such that the user may be able to perform the calibration in the field using a standard target. The system would then be pre-programmed to perform the calibration process and generate the transformation mapping in the field.

[00130] Once the system is installed in its service location, the process is at step 1105, wherein live image or video of a user is obtained and grabbed by, e.g., a frame grabber. At the same time, the user's location is measured, such that the user's point of view is determined. This can be done using IR measurement technology, or using available sensors, such as, e.g., Kinect®, available from Microsoft®. At step 1115, if needed, optionally a scaling factor is applied to match the screen size and user height.

[00131] At step 1120 the appropriate transformation mapping is selected, or a standard factory calibrated mapping is interpolated to create the correct mapping for the user's particular location in front of the screen. The transformation mapping is then applied by the EyesMatch module to the live video. In this context, the term "live" also refers to a video feed that was

grabbed by a frame grabber and may reside in a buffer prior to being sent to the monitor screen for presentation. Also, if needed due to the transformation, at step 1125 missing pixels are filled in by interpolation technique. At step 1130 the image is sent from the buffer to the screen to be displayed. It should be appreciated, that due to fast processors available commercially, steps 1105-1130 can be performed in real time, such that the user cannot perceive any delay in presenting the image on the screen, which is referred to herein as "real time" or "live" presentation.

[00132] The EyesMatch module can be used to provide a more natural environment that more conform to daily interaction. For example, when making a video call using a PC, such as by using Skype®, since the camera is normally positioned above the monitor, the caller often seems to look away from the camera, since the caller is actually looking at the screen. This provides an unnatural conversation, since the callers are not looking at each other when talking. The EyesMatch module can be used in such application to apply a transformation such that the image displayed on the monitor appears as if the caller was looking directly at the video cam, even if the caller was actually looking at the screen, and thus away from the video cam. The transformation can be done either at the sender or receiver's computer. For example, a user using Skype® may have EyesMatch module installed on his computer, such that whenever the video cam is activated for a video conference, the EyesMatch module intercepts the signal from the video cam and applies the transformation prior to allowing the video to stream to the other user via the Skype application. When the other user receives the video signal, it has already been transposed such that the other user sees the image as if the caller is looking directly at the video cam. The same can be implemented is standard video conference systems, such as WebEx, Polycom, etc.

[00133] Figure 12 is a block diagram illustrating modules and processes to perform the calibration and image transformation according to an embodiment of the invention. Block 1230 represent the image acquisition module, which may include one or more still or video cameras, an IR camera or distance measurement sensor, a 3D camera arrangement, etc. Module 1232 controls the camera optimization settings, e.g., to obtain the proper FOV, image the proper zone in front of the screen, set focus and/or resolution, etc. Module 1260 is the trigger event module, which can be used to identify the presence of a user in front of the screen and start the image

acquisition and transformation process. At other times, the system can be set at idle, showing only a background image on the screen until a user is detected.

[00134] Brace 1360 encompasses the calibration procedure, which will be described herein for a system configured for a field installation wherein the camera 1230 is positioned above the display screen 1240, as also exemplified in Figure 1. The calibration 1260 can be performed in the factory prior to shipment or in the field after installation. At 1261 a target with pointers is positioned and at 1262 one set of reference images are obtained (using, e.g., camera at eye level and looking forward) and a corresponding set of input images are obtained (e.g., using the camera at its field installation position above the screen and pointing downwards. At 1263 pointers from each input image are matched to corresponding pointers in corresponding reference image. So as to generate transformation vectors. Depending on the quality of mirror representation sought, optionally the vectors corresponding to areas around the eyes of a user are fine-tuned at 1264.

[00135] Using the matching of the pointers of the input images to the reference images, at 1265 the transformation parameters that lead to the best image matching can be determined and selected. The parameters that can be used for the transformation include the following. A highly effective transformation parameter is a tilt transformation. Tilt transformation corrects the distortion in the image caused by the camera being tilted downwards. The tilt transformation modifies an input image taken with the camera looking downwards and transforms the image to appear as if the camera was pointed straight horizontally (Video engine can also correct azimuth error). Another transformation parameter is elevation translation. The elevation spatial translation transformation linearly modifies offset in an image taken with a camera positioned externally to the screen, e.g., above the screen, and transforms the image to appear as if the image was taken from the screen location at the user's eyes level (match the eye height to the image in the screen height) Horizontal translation can also be apply to correct missalignments between the camera and the center of the screen). Another important transformation for mimicking mirror is scale. As explained above, in an actual mirror reflection the user sees very little change in body image size as the user gets closer to the mirror. Conversely, in a camera image the size changes considerably with distance to the camera. A scale transformation reduces the effect of size change with distance to the screen, so that the user sees almost constant size of

himself in the screen, regardless of distance to the screen. Depending on the position and FOV of the camera, an x-y translation of the image may also be required.

[00136] In practice, it has been shown that performing tilt, elevation, and scale translations provides a rather convincing image that only needs to be right-to-left reversed to very effectively mimic a mirror reflection. For further improvements, one may also use barrel-effect transformation and fish-eye transformation. Additionally, one may add depth perception to the projected image by adding lighting and shadowing, either artificially by operating on the intensity and/or hue of the image pixels, or physically by controlling illumination elements such as LED's strategically position about the screen or the user. Moreover, a 3D effect can be created either with the use of 3D glasses or using glasses-free 3D technology. In glasses-free 3D technology different sets of images are projected to each eye. Since in the embodiments described the distance to the user and the location of the user's eye are measured or estimated, it makes it easier to project a 3D image to the user by projecting different sets of the images to each of the user's eyes.

[00137] At step 1266 a transformation mapping is generated and stored. This transformation mapping will be used at 1234 for transforming live video feeds from imaging 1230, utilizing the estimated distance to the user. Depending on the transformation mapping operation, pixel filling may be needed. For example, using a camera on top of the screen and tilted downwards would require tilt and elevation transformations which would provide an image that can be enhanced using pixel filling. This can be done at 1237, and the resulting image would be presented on the screen at 1240. Applying the transformation and pixel filling onto live video feed can be easily done in real time using the appropriate processing capacity.

[00138] Figure 13 illustrates another embodiment, wherein calibration and transformation mapping is performed in the field after installation of the system. In the example of Figure 13, camera 14 is positioned above video screen 12 and is tilted downwards. The camera 14 and screen 12 are in communication with and are controlled by controller 18. The user is provided with an input device 16, which may be in communication with controller 18 using wired or wireless technology. The user stands at an appropriate location, e.g., 2-3 meters from the screen 12, and enables the calibration process by, e.g., entering a "calibrate" command from the remote input device 16. During the calibration process, a live video stream is fed from camera 14 to the controller 18, and the controller "flips" the image about a central vertical axis (left to right) prior

to displaying it on screen 12. Using the input device, the user acts on the various transformation functions. For example, the input device may include input buttons for correcting tilt, elevation and scale, as schematically illustrated in Figure 13. The user's input commands are transmitted to the controller 18, which then applies the transformations in real time to the video feed, such that the image is changing in real time in front of the user. The user may change the amount of each transformation function until the user sees a convincing image in the screen, at which point the user may press an input button indicating that calibration is completed. The controller 18 then saves the appropriate calibration parameters and uses these transformation parameters for all future live video feeds.

[00139] Another feature illustrated in Figure 13 is distance calculation. Since the position and tilt of the camera 14 with respect to the screen 12 are known (e.g., due to fixed bracket attaching the camera to the top of the screen), the image captured by the camera 14 can be used for triangulation and distance calculation. For example, when a user appears in a frame of a live video stream captured by camera 14, triangulation to the tips of the user's shoes can be performed in order to calculate the user's distance to the screen 12. This operation can be done every fixed number, n, of frames, such that the user's distance from the screen can be continuously updated to capture user's movement. The background can be updated once there is no user in front of the mirror – adaptive background method.

[00140] A further feature illustrated in Figure 13 is the use of lighting to create depth and/or atmosphere. Specifically, several light sources 17, e.g., LED arrays, can be placed at different locations about the screen 12, and be controlled by controller 18. The light sources 17 can be operated so as to create more depth in the image, e.g., adding shadows and brightly illuminated areas. The light sources 17 can be of different colors, so as to improve the existing lighting and create the appropriate overall "temperature" of the displayed image. The light sources can also be tuned according to the distance to the user, so as to create consistent image and remove artifacts created by the store's illumination. Alternatively, or additionally, color and lighting changes can be done by the controller directly on the digital image received from the camera 14. For example, color transformation can be used to enhance the mirror appearance of the image, e.g., operate on parameters providing an image that is: glossy, crisp, sharp, mat, metallic, etc. The controller 18 can also add virtual spot of lights and/or shadows on the image to create more depth to the image. Also, an anti-reflecting coating is provided on the front of the

screen so as to remove and reduce reflections that are normally associated with flat panel displays. The LED Array can be connected to light sensor, and/or to light temperature sensor, and can be predefined to stay in particular levels of light and light temperatures, and will adjust automatically.

[00141] According to further embodiments, 3D imaging is implemented with two cameras at a distance D between each other. Distance D is calculated as an average distance between human eyes, generally referred to as interpupillary distance (IPD), which for adults is around 54–68 mm. The transformation will be calculate from registration of image obtained from the input camera at a distance D with an image obtained from two reference (base) cameras at a spatial distance that is also similar to the distance between to user eyes. The base for registration can be taken using a Kinect® or any IR 3D camera. Google glasses can also be an option for calibration, wherein the user/target wearing the Google glasses will take a picture of himself in front of a regular mirror. Since the FOV is fixed, the only thing that needs to be done is resize the image for true size. An image transformation module, such as controller 18, can also apply image resize for zoom in/out to allow the user to fit the image to the screen or to focus on some part.

[00142] As can be understood, while some of the above embodiments relate to building the transformation mapping by registering images or other empirical methods, alternatively direct calculations of the distortion between camera and theoretical user point of view can be performed based on analytics. Using analytics voids the need for any registration procedure. Instead, analytical mapping transformation is created to correct for the distortions.

[00143] Yet another feature illustrate in Figure 13 is the use of the Internet or the cloud for providing services relating to the transformation and mirror presentations. For example, according to one embodiment, the transformation can actually be performed in the cloud, if a sufficiently fast connection exists. In such a case, the feed from the camera 14 can be fed to server 181, which applies the transformation and sends it back to controller 18 for display on monitor screen 11. According to another embodiment, the images from camera 14 or transformed images from camera 14 can be stored in the cloud and streamed to devices, such as smartphone 183, tablet 187, and another monitor screen 189, such as a flat panel TV. This can be done in real time while the user is trying an outfit, such that the user can share the experience and get input from others at remote locations. Also, once the user leaves the store, the user can have access to all the images taken by using a smartphone, tables, PC, etc. Note that for ease of

user interface, as shown in monitor 189 of Figure 13, thumbnail images of various tries can be displayed together with the current image, to enable the user to choose among views.

[00144] Figure 14 illustrates an embodiment for extracting data from the image of camera 1430. The trigger event module 1450 detects the presence of a user and activates the process for extracting the data. A camera optimization module 1432 can be used to control the camera to obtain the best image for the data extraction. In this embodiment, when the camera 1430 is located above the screen and pointed down, it can see the user's shoes from, e.g., 1m to 4m from the screen. However, since the camera is pointed down and the shoes are at a high distance from the camera compared with the user's head, the distortion is at the maximum. With the transformation mapping discussed above a compelling distortion improvement is achieved at all distances.

[00145] Additionally, according to this embodiment, the image of the user is separated from the background at 1462. At 1464 the central mass is calculated by multiplying the binary image of the user only by index matrix, and then taking the mean of the pixels index. Also, the min. body pixel below central mass (J,k) is determined by opening a window around k (central mass) and finding the lower active index – which can be assumed to represent the edge of the shoes. At 1468 the user's height is calculated by finding the top of the head and, based on the distance camera resolution, FOV, and the camera geometric tilt, the user's height is estimated.

[00146] Figure 15 illustrates an embodiment wherein stitching of images from n cameras is performed. Stitching is particularly beneficial for improving the image resolution and FoV when the user is approaching closer to the screen. In the embodiment of Figure 15, the live feeds 1530, 1532, of n cameras, 1:n, are stitched together. Trigger event module 1560 may be used to trigger stitching when a user is detected in front of the screen. Also, distance measurement may be supplied, either a single value representing an average distance to the user, or multiple values, e.g., one distance value for each camera. Conversely, or in addition, multiple distance values may be provided to indicate different distances of different body part.

[00147] Each camera may undergo separate camera optimization, 1533, 1536, and the feeds from each camera would go through a different geometrical transformation, 1560, 1562, since the location and orientation of the cameras are different relative to the user point of view, 1564, 1562. Overlay decision 1570 is the decision element to determine where will be best to perform the stitching. If we are dealing with scenario with two cameras one located above and

one below the screen, the overlay decision will indicate the index of the best cut. Since we have distance measurement constantly, it is possible to maintain the stitching line almost fixed once user approach the mirror. For maximum performance the stitching 1572 needs to be optimized based on the user's distance from the cameras. Smoothing 1574 is needed to filter out the lines that may be generated at the intersections of different images from different cameras. The images from different cameras would be slightly different due to differences in absolute quality and in lightning, and due to different distortion correction for each camera. Interleaving between the images on multiple rows can be used to ease the lighting affect. The stitched image is output at 1576.

[00148] In the above described embodiments, the transformation mapping corrected the image obtained by the cameras and provided an image that mimics an image that would have reflected from a mirror. The following embodiment, illustrated in Figure 16, improves the quality of the eyes' presentation. The idea behind this embodiment is to override the eyes zone, or just the eyes, with modified pixels that will create the feeling of broadside view – i.e., presenting the eyes to their fullest mimicking the user looking directly at himself in the mirror. As can be understood, the user would be looking directly at himself projected in the screen, but since the camera is not positioned at eye level pointing horizontally, the user's eye as captured by the camera would not be seen looking straight ahead. The embodiment of Figure 16 corrects this problem.

[00149] The majority of the elements in Figure 16 are similar to that of Figure 12 and have the same reference, except that it is in the 16xx series. These elements will not be described here again. Instead, attention is directed to element 1680, which is responsible for the eyes correction. Since the scaling has already been correct by the prior elements, what needs to be done at this stage is to fix and/or reconstruct the internal eyes elements, e.g., pupil, iris, etc., so as to present the proper image.

[00150] Module 1680 first locates the eyes in the image and makes sure that the user does indeed look at the screen. The information for this step and for the corrections can be deduced from historical images, estimations for regular statistical eyes proportions, or actual measurement when the user looks directly at the camera or once the user is standing far enough from the screen where the distortion is relatively low after the transformation mapping. If the user is found to be looking at the screen, the pixels corresponding to the eyes area are either

transformed or actually replaced by pixels that position the iris and pupil at the center of the eye, looking forward. Also, the sclera may be enlarged, to mimic straight-on view, especially if the camera is positioned above and pointed downwards.

[00151] Another feature that may be implemented in any of the above described embodiments is the frequency of transformation parameter update. That is, at times the user may prefer a stable image when he is standing stationary in front of the screen that mimics the mirror. Having the transformation mapping engine change while user is stationary may create an uncomfortable feeling. On the other hand, when the user is moving faster toward or backward from the screen, it may be fine to update the transformation parameters faster. Accordingly, according to this feature, multiple behavior zones are established. According to one embodiment, the behavior zones are set according to distance only. For example, when the user is moving more than a set distance amount, the video engine is updated. According to one embodiment, if the user moved an amount of less than, say 25cm, the transformation mapping is performed at a lower speed, say every x seconds, while if the user moved more than 25cm, the transformation mapping is updating the parameters at a second, faster speed. According to another embodiment, the zones are set according to the user's movement speed. For example, if it is determined that the user is moving less than x cm/s, then a first transform updating frequency is implements, while if the user moves faster, a second, faster updating frequency is used.

[00152] Thus, as can be understood from the above, while a real time video engine update may be used to image the user, the presentation transformation on the monitor screen may not be necessarily changing in real time, depending on the user's behavior. For example, is the user is relatively stationary or moves very slow, transformed parameters can vary in a semi-real time. Then, when the user starts to move faster or a large distance, the video engine may be updated more frequently.

[00153] It should be appreciated that the embodiments described above may be implemented using a digital (e.g., video) camera and a monitor, wherein the images from the camera are fed to a processor. The processor applies the transformation mapping to the images and display images in either a display mode or a mirror mode on the monitor. From the above description it should be appreciated that the mirror mode may be implemented by displaying on the monitor the live video feed, as modified by the transformation mapping. That is, in mirror mode the image that is being displayed on the monitor is an image/video of the user taken in real

time. Conversely, in display mode the image that is being displayed is an image/video obtained in the past and taken from storage. The stored images may be either the raw images as fed from the camera or already transformed images. In either case, the prior images that are being displayed in a display mode are transformed images. Therefore, if the stored images are the raw images, the processor applies the transformation mapping prior to displaying the images on the monitor.

[00154] Whether the system operates in a display or mirror mode can be considered as a temporal issue: during mirror mode, the image that is being shown on the monitor is a transformed image of what the camera sees at that particular moment (or at a *de minimis* or unnoticeable earlier time), while during display mode the image that is being shown is a transformed image of what the camera or other camera saw earlier and is different than what the camera sees now. This issue also relates to perception: during mirror mode, since the monitor shows a transformed image of what the camera sees now, the user observing the monitor has the perception that he is looking at a mirror, while during the display mode the user observing the monitor has the perception of observing a video of events that took place in the past.

[00155] It should be appreciated that the system can be implemented separate and irrespective of the monitor screen. For example, in some locations (e.g., dressing room), only the monitor screen may be installed, without any camera. The monitor is configured to communicate with the system so as to download and display stored images. The user may interact with the monitor to view prior images taken, e.g., to compare with current outfit. As another example, all of the images taken can be uploaded to the cloud, such that a user may view the images on a PC or mobile device, such as using an app on a tablet.

[00156] As can be understood from the above description, various embodiments of the invention provide an image transformation apparatus that comprises an image input port for receiving digital images from a camera; a transposed image output port for outputting transposed images to be displayed on a monitor or stored in memory; and a transposition module that is programmed to receive images from the input port and apply a transformation to the images, wherein the transformation includes at least flipping the image about a vertical axis so as to reverse right and left sides of the image; applying a transformation mapping to the image to modify the image such that it appears to mimic a reflection of a mirror; resizing the image to reduce variations caused by changes in object's distance to the camera. In other embodiments, a

program is provided that when operated on a computer causes the computer to transpose a digital image obtained from a camera, such that the transposed image resembles a reflection from a mirror, the transposition including at least flipping the image about a vertical axis so as to reverse right and left sides of the image; applying a transformation mapping to the image to modify the image such that it appears to mimic a reflection of a mirror; resizing the image to reduce variations caused by changes in object's distance to the camera. The program can be operated in any general purpose computer, such as a server, a PC, a tablet, a smartphone, etc.

[00157] According to further embodiments, a system is provided which enables a user to view self image on a digital screen by having the digital screen project an image mimicking a mirror image. The system includes a digital camera generating a stream of images of the user; a controller having an image input port to receive the stream of images from the camera and applying a transformation to the images to generate transformed images mimicking a reflection of the user in a mirror; the controller having an output port for outputting a stream of transposed images to be displayed on a monitor; and a storage facility to store the transformed images. The controller further having an Internet connection for uploading the stream of transposed images to the cloud. The system further having clients enabling download and viewing of the transformed images from the cloud.

[00158] In various embodiments, a controller applies a transformation to a stream of images, which includes: flipping the image about a vertical axis so as to reverse right and left sides of the image; applying a transformation mapping to the image to modify the image such that it appears to mimic a reflection of a mirror; and resizing the image to reduce variations caused by changes in object's distance to the camera. The mapping essentially reassigns new addresses to each pixel of the original image. The transformation mapping renders an image appearing to have been taken from a camera positioned at eye-level height and pointing horizontally. The transformation mapping comprises at least a tilt transformation and an elevation transformation, wherein a tilt transformation transforms the image to resemble tilting of the camera and the elevation transformation transforms the image to resemble changing the elevation of the camera.

[00159] The transformation mapping can be one that includes angle, tilt, azimuth, scale, spatial translation (i.e., elevation linear offset or horizontal offset) etc. The final transformation is a matrix multiplication of the individual transformation to generate the individual distortions.

[00160] In other embodiments a system is provided for enhancing video conferencing or video calling. The system includes a transformation engine to transform a stream of images taken from a video camera positioned about a periphery of a monitor screen, such that images of a user looking directly at the screen portray a user not looking directly at the camera. The transformation engine receives the stream of images and transforms the images so as to provide images showing the user looking directly at the camera. The transformation includes any combination of correction for angle, tilt, azimuth, scale, spatial translation (i.e., elevation linear offset or horizontal offset), etc. The transformation may also include override the eyes zone, or just the eyes, with modified pixels that will create the feeling of broadside view – i.e., presenting the eyes to their fullest mimicking the user looking directly at the camera.

[00161] In various implementations, the method further comprises calculating distance to a user appearing in the image by tracking the distance between the user's eyes or the head size, and scaling the image accordingly. For example, according to one embodiment, the system is programmed with an expected distance between the user's eyes, i.e., interpupillary distance (IPD), at an average distance from the camera. The 95 percentile adult male in the USA has an IPD of 70 mm, while for females it is 65mm. When a user is sensed in front of the camera, the system may first determine whether it is a male or female, or simply go directly the the distance measurement program and use an average IPD number, e.g., 68mm. For the range measurement, the system identifies the pupils in the image, and scale the image so as to match the expected IPD. As video images continue to stream, the system scales the image to maintain the IPD constant and matching the expected IPD. In this manner, when the user moves away or closer to the camera, the size of the user in the image projected on the monitor screen would remain about the same, thus mimicking a reflection on a mirror. As can be understood, the system can use other standard measurements, such as distance between ears, etc., but using the eyes would make it simpler since the system can recognize the eyes pretty easily. However, if the user wears shades, the system may have to resort to other measurements based on o0ther body parts. This switch can be done dynamically, i.e., if the system finds the eyes, it uses IPD, but if not, it falls back to other body parts.

[00162] Also, effect filters can be applied, such as lighting filter effect, reflective texture effect, color spectrum filter to create metallic feeling, etc. Similarly, the camera's shutter timing, sensor gain, whitebalance, and any of their combinations can be controlled to modify the

resulting image. In various embodiments, these parameters are controlled based on a dynamic region of interest (Dynamic RIO), such that the changes applied to the parameters relate only to a selected region in the image, and not the entire image. For example, the parameters can be modified and updated based on the distance to the user and limited to an ROI which is a window around the user. For example, the user's image can be separated from the background, and thhe parameters applied only to the pixels belonging to the user's image.

[00163] In further implementations, enhanced real time video effect is implemented by, e.g., recording a video with a high resolution camera at a first frame rate, and manipulating the display in a higher frame rate so as to smooth the video. Additionally, the background of the received video stream can be replaced with an artificial background stoered in the system. Additional video processing can be used to add or change color or texture of accessory or other element in the image. Also, for video conferencing and other applications the transformation can be performed without vertical flipping of the image.

[00164] While certain features of the invention have been illustrated and described herein, many modifications, substitutions, changes, and equivalents may occur to those skilled in the art. It is, therefore, to be understood that the appended claims are intended to cover all such modifications and changes as fall within the true spirit of the invention.

CLAIMS

1. A method for operating a system having a monitor, a camera, and a processor, so as to display a mirror-mimicking image on the monitor, by performing the non-ordered steps comprising:

obtaining a digital image from a camera;

flipping the image about a vertical axis so as to reverse right and left sides of the image;

applying a transformation mapping to the image to modify the image such that it appears to mimic a reflection of a mirror;

resizing the image to reduce variations caused by changes in object's distance to the camera;

displaying the image on the monitor after performing the flipping, transformation mapping, and resizing.

2. The method of claim 1, wherein the transformation mapping renders an image appearing to have been taken from a camera positioned at eye-level height and pointing horizontally.

3. The method of claim 1, wherein the transformation mapping comprises at least a tilt transformation and an elevation transformation.

4. The method of claim 3, wherein the tilt transformation modifies an input image taken with a non-horizontally pointing camera and transforming the image to appear as if the camera was pointed straight horizontally.

5. The method of claim 3, wherein the elevation transformation modifies an input image taken with a camera positioned at arbitrary height and transforming the image to appear as if the camera was positioned at a user's eye level.

6. The method of claim 1, wherein the step of resizing the image is performed integral to the step of applying the transformation mapping.

7. The method of claim 1, further comprising the steps:
obtaining a reference image;
performing registration of the digital image with the reference image;
using data obtained from the registration to generate the transformation mapping.

8. The method of claim 1, further comprising applying a translation transformation to move the image within display area of the monitor.

9. The method of claim 1, further comprising changing illumination intensity of individual or groups of pixels of the monitor, so as to enhance shading or illumination in the image.

10. The method of claim 1, further comprising applying at least one of a barrel-effect transformation and a fish-eye transformation.

11. The method of claim 1, further comprising:
determining distance to a user appearing in the image; and,
varying resolution of the image according to the distance.

12. The method of claim 1, further comprising a step of pixel filling, wherein pixel image is extrapolated into empty pixels left after applying the transformation mapping.

13. The method of claim 1, further comprising the steps:
obtaining a second digital image from a second camera;
flipping the second image about a vertical axis so as to reverse right and left sides of the second image;
applying a transformation mapping to the second image to modify the second image such that it appears to mimic a reflection of a mirror;

resizing the second image to reduce variations caused by changes in object's distance to the second camera;

stitching the image and the second image after performing the flipping, transformation mapping, and resizing, to thereby obtain a stitched image;

displaying the stitched image on the monitor.

14. The method of claim 13, wherein field of views of the camera and of the second camera overlap, and further comprising the step of overlay decision to determine best location in overlapping parts of the field of views to perform the stitching.

15. The method of claim 14, further comprising a smoothing operation to correct artifacts caused by the step of stitching.

16. The method of claim 1, further comprising the steps:

obtaining a second digital image from a second camera;

flipping the second image about a vertical axis so as to reverse right and left sides of the second image;

applying a transformation mapping to the second image to modify the second image such that it appears to mimic a reflection of a mirror;

resizing the second image to reduce variations caused by changes in object's distance to the second camera;

displaying the image and the second image after performing the flipping, transformation mapping, and resizing, to thereby obtain a three-dimensional image on the monitor.

17. The method of claim 1, wherein the non-ordered steps are performed on a series of images of a live video feed from the camera.

18. The method of claim 17, further comprising:

determining distance to a user appearing in the live video feed; and,

varying rate at which the non-ordered steps are performed on the series of images according to the distance.

19. The method of claim 17, storing the live video feed in a digital storage device and selectively operating the system in one of a mirror mode or display mode, wherein during mirror mode displaying on the monitor transformed images of what the camera sees at that particular moment while during display mode displaying on the monitor a transformed images of what the camera saw in the past and obtained from the digital storage device.

20. The method of claim 1, further comprising calculating distance to a user appearing in the image by identifying user's shoes and triangulating to the shoes.

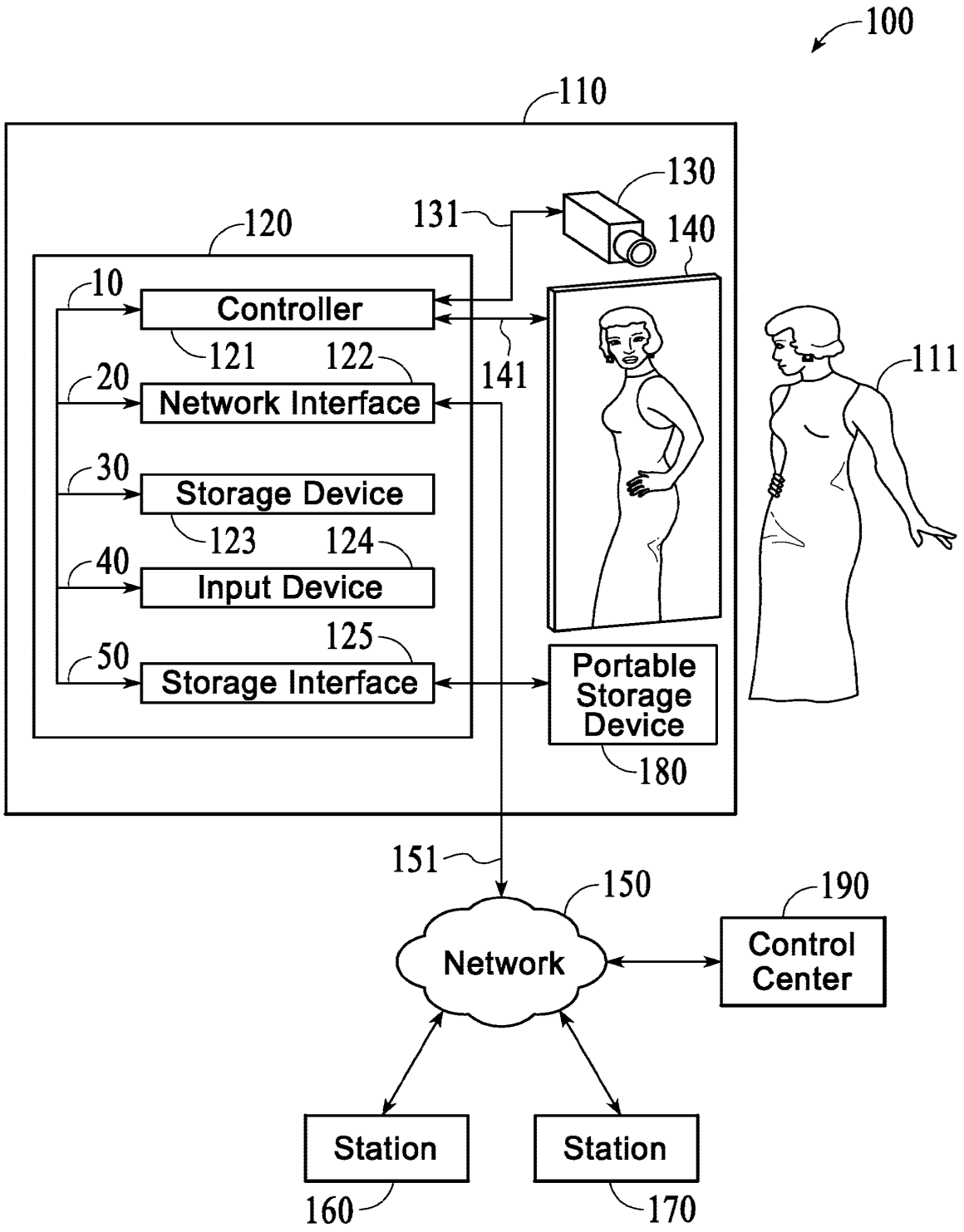
100
110
130
131
140
120
10
Controller
121
122
141
111
20
Network Interface
30
Storage Device
123
124
40
Input Device
125
50
Storage Interface
Portable Storage Device
180
151
150
190
Network
Control Center
Station
Station
160
170

FIG. 1

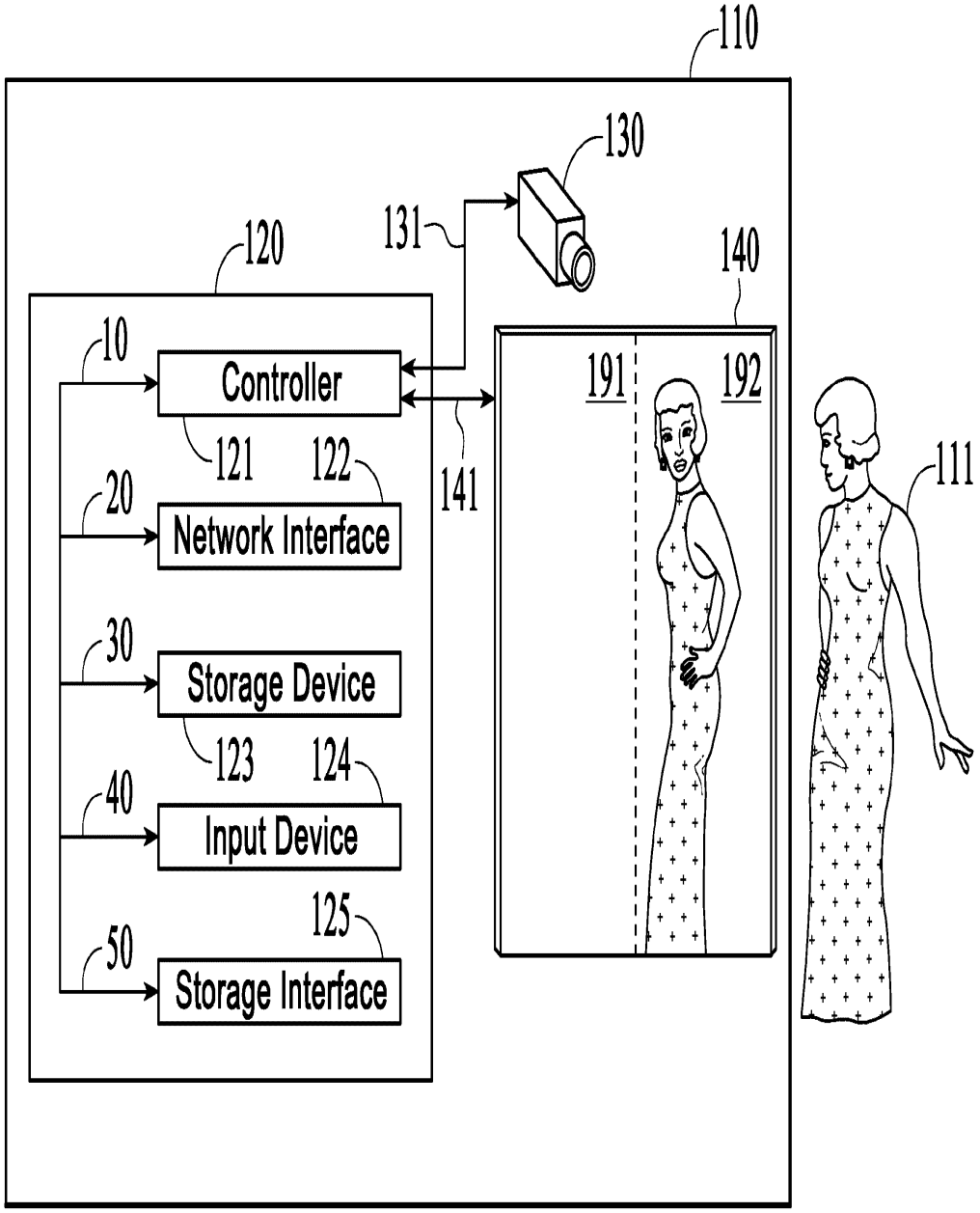
110
130
131
120
140
10
Controller
191
192
121
122
141
111
20
Network Interface
30
Storage Device
123
124
40
Input Device
125
50
Storage Interface

FIG. 2A

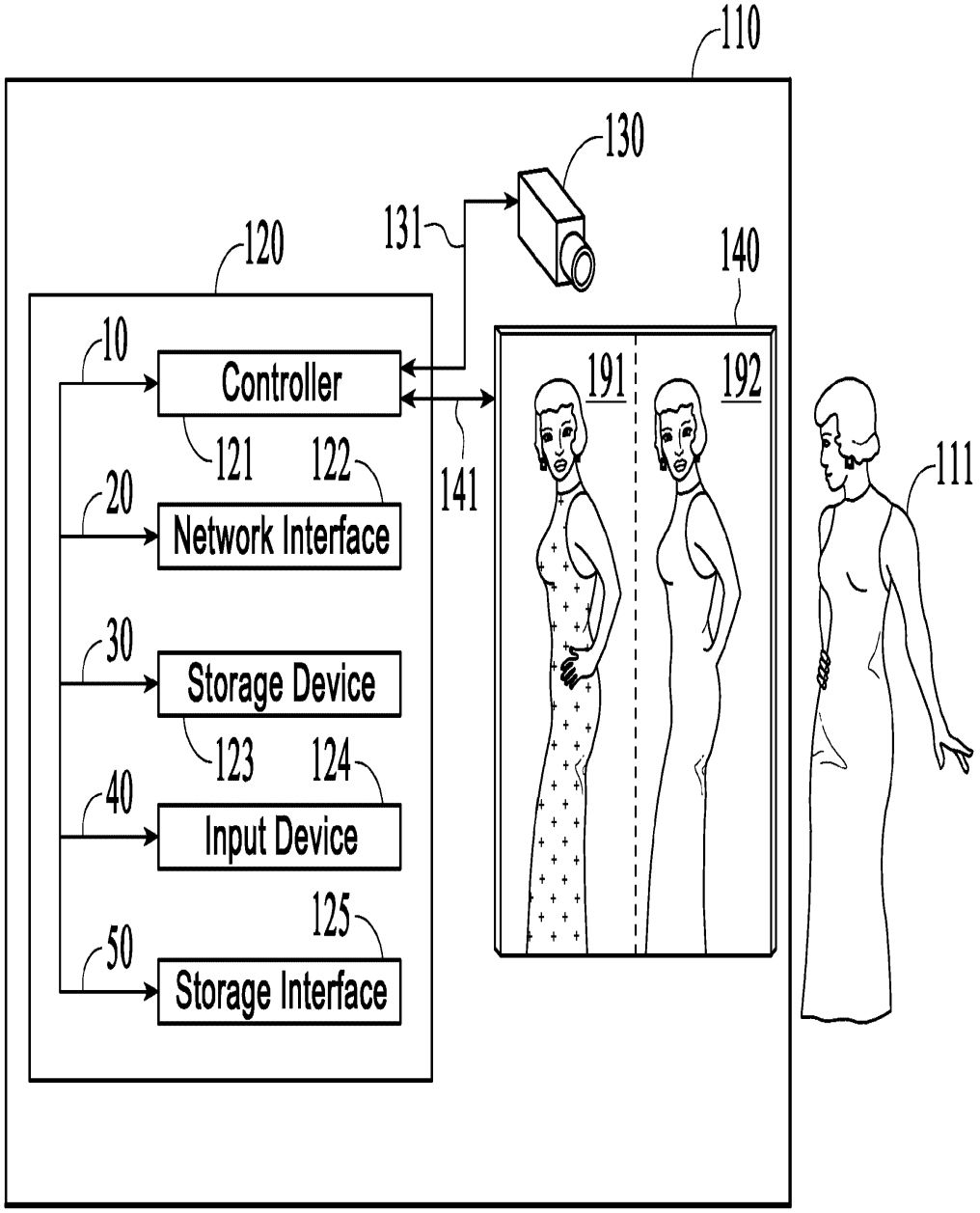
110
130
131
120
140
10
Controller
191
192
121
122
141
111
20
Network Interface
30
Storage Device
123
124
40
Input Device
125
50
Storage Interface

FIG. 2B

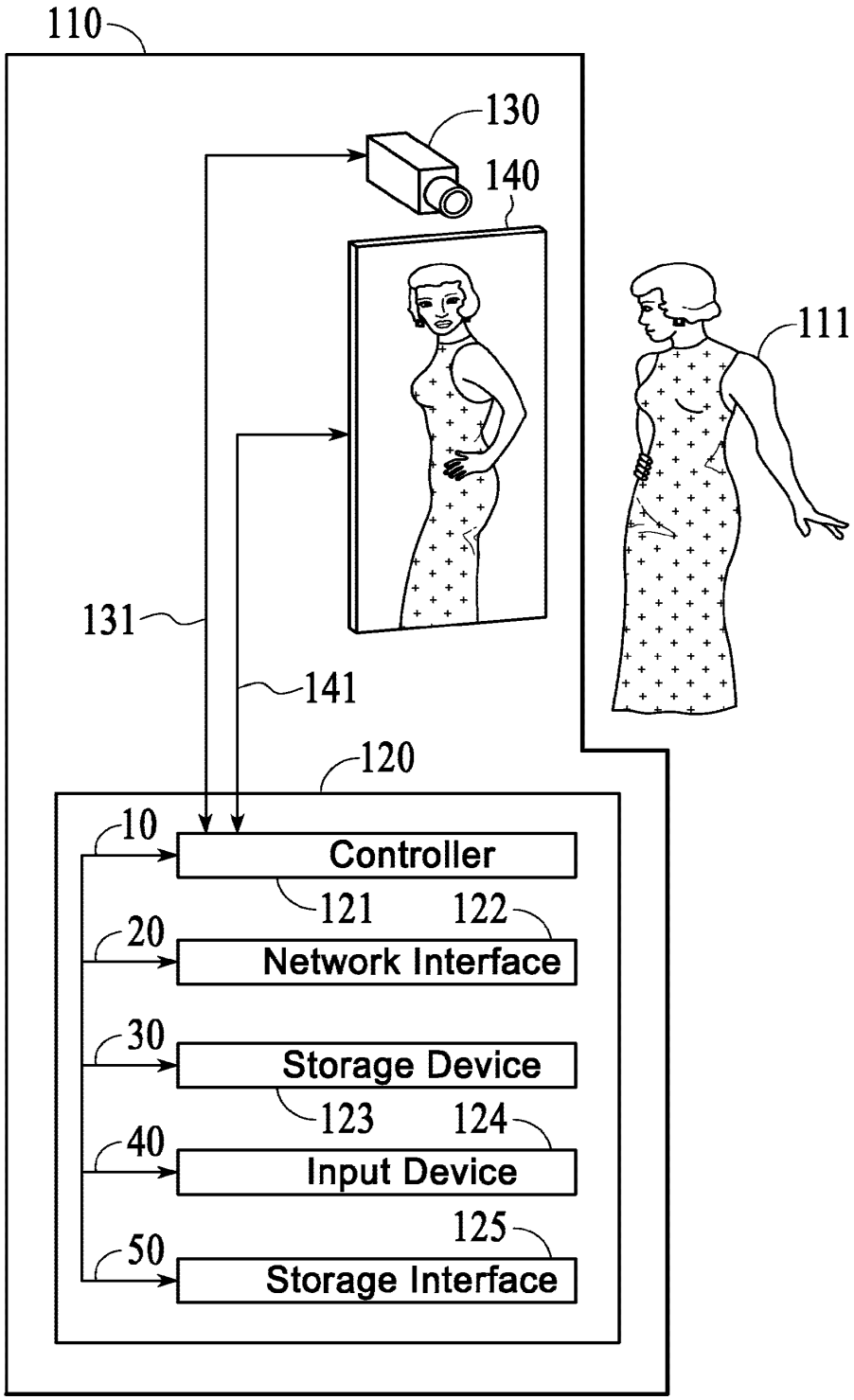
110
130
140
111
131
141
120
10
Controller
121
122
20
Network Interface
30
Storage Device
123
124
40
Input Device
125
50
Storage Interface

FIG. 3A

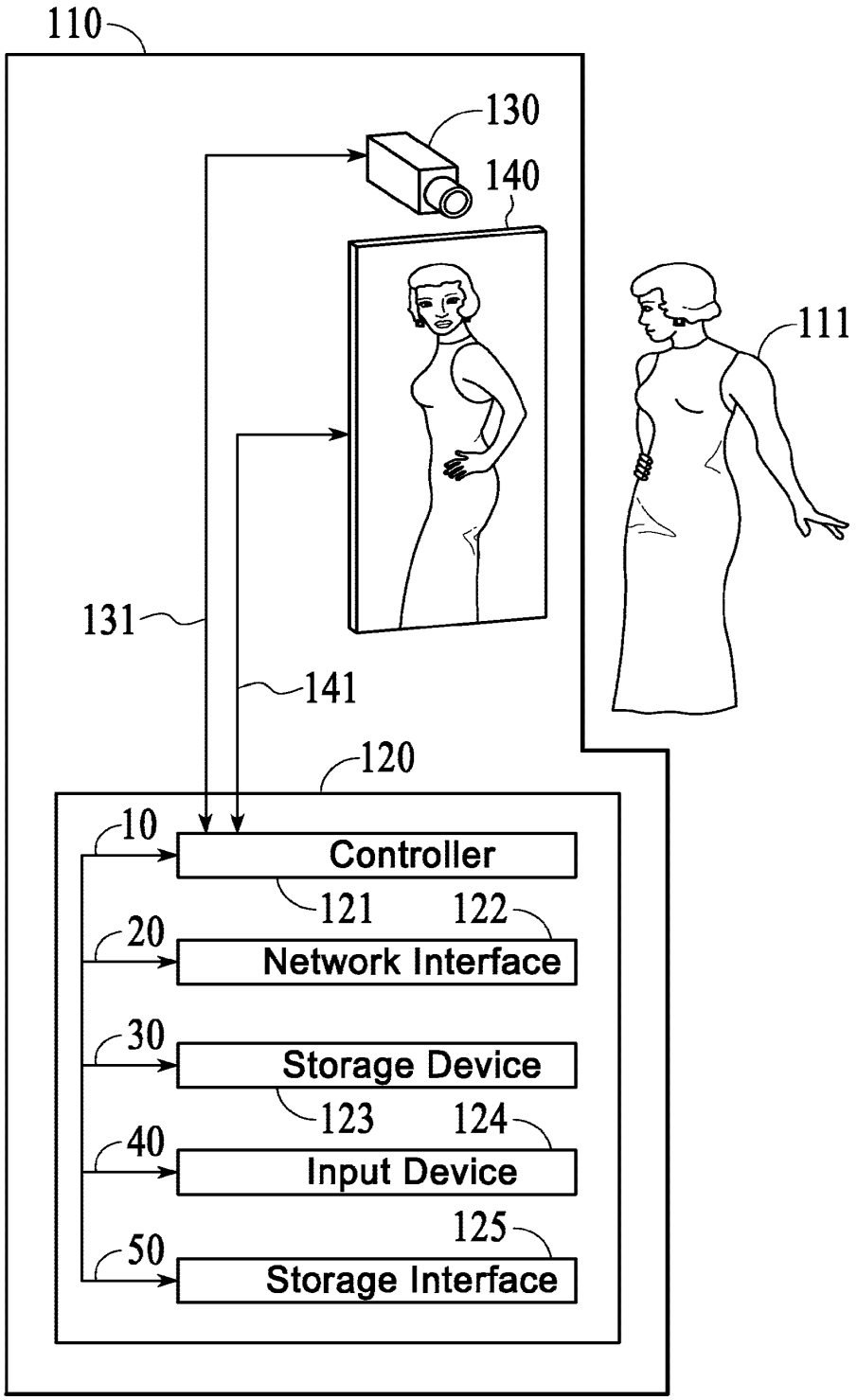
110
130
140
111
131
141
120
10
Controller
121
122
20
Network Interface
30
Storage Device
123
124
40
Input Device
125
50
Storage Interface

FIG. 3B

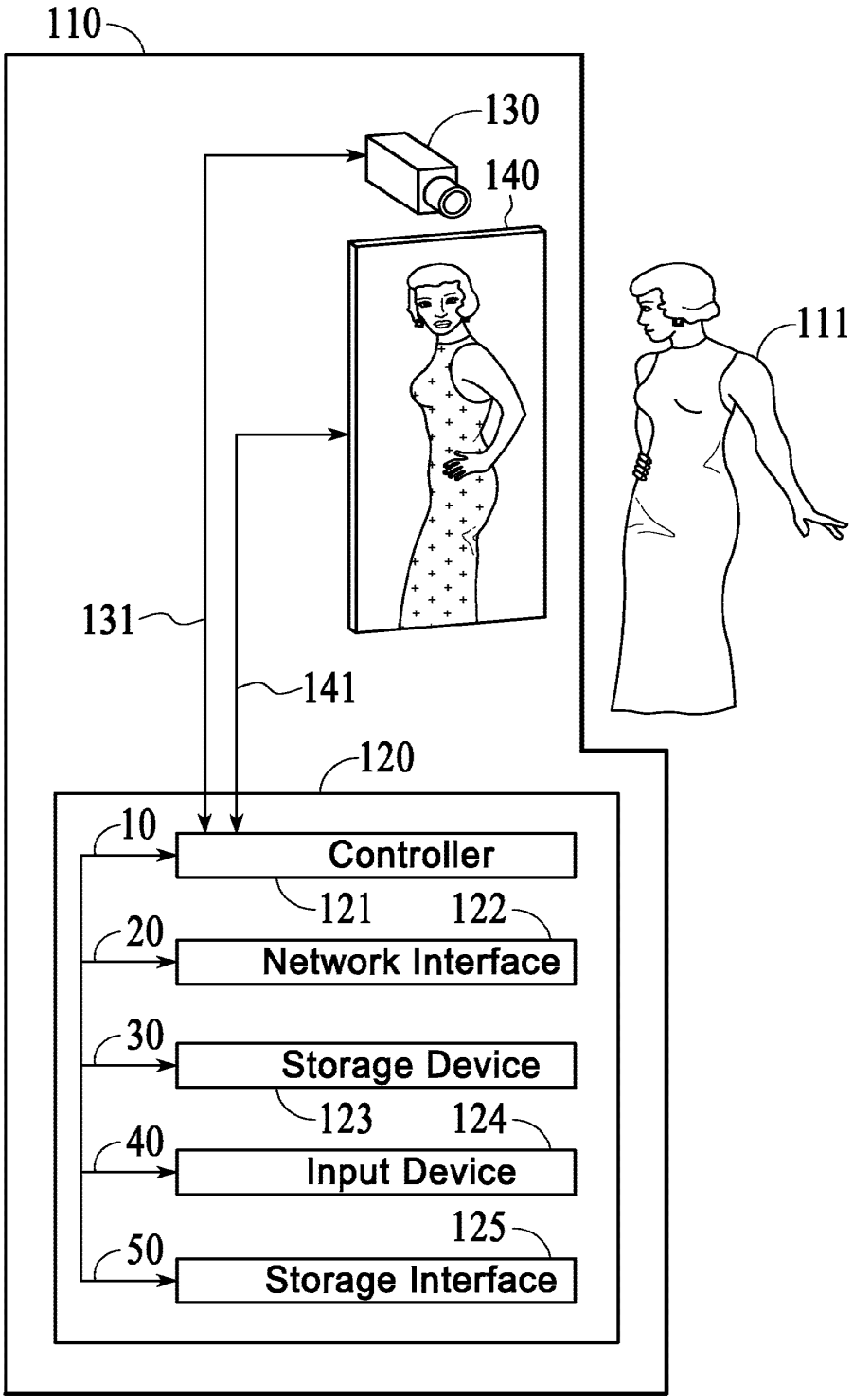
110
130
140
111
131
141
120
10
Controller
121
122
20
Network Interface
30
Storage Device
123
124
40
Input Device
125
50
Storage Interface

FIG. 3C

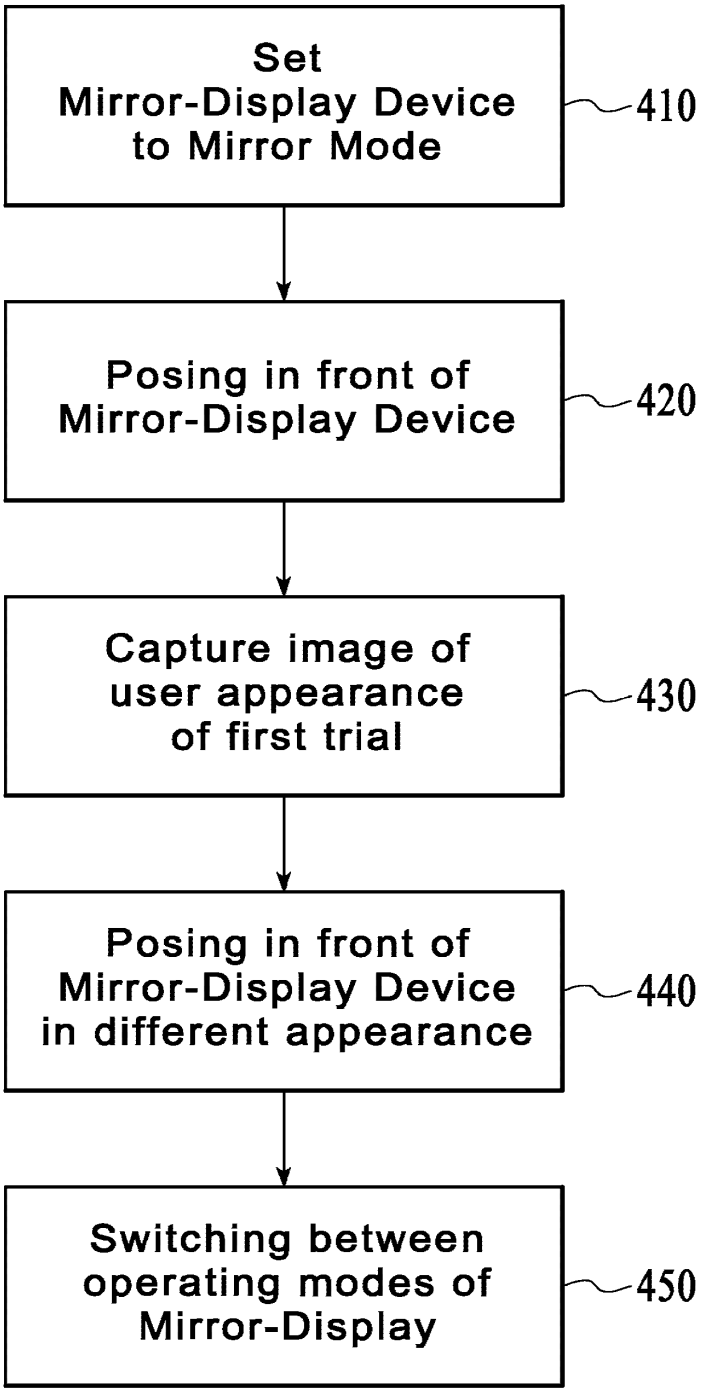
Set
Mirror-Display Device
to Mirror Mode
410
Posing in front of
Mirror-Display Device
420
Capture image of
user appearance
of first trial
430
Posing in front of
Mirror-Display Device
in different appearance
440
Switching between
operating modes of
Mirror-Display
450

FIG. 4

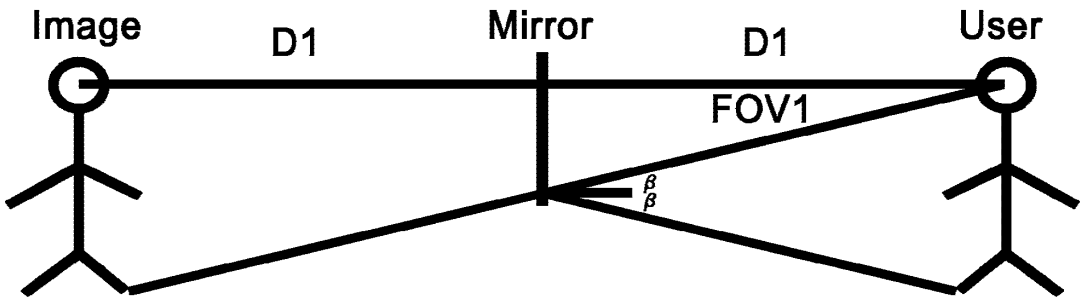
Image
D1
Mirror
D1
User
FOV1
β
β

FIG. 5A

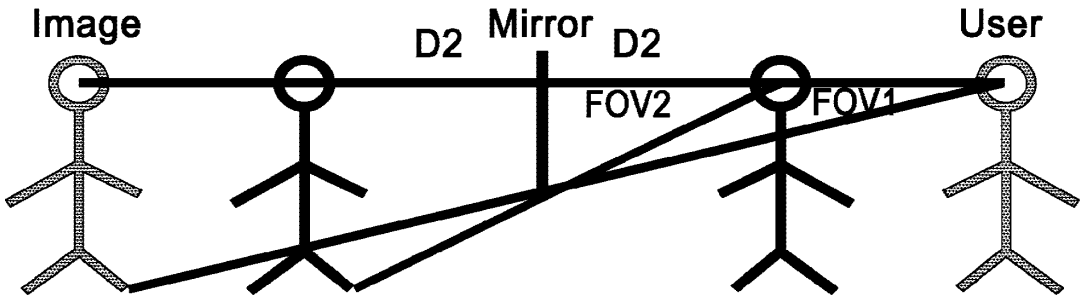
Image
D2
Mirror
D2
User
FOV2
FOV1

FIG. 5B

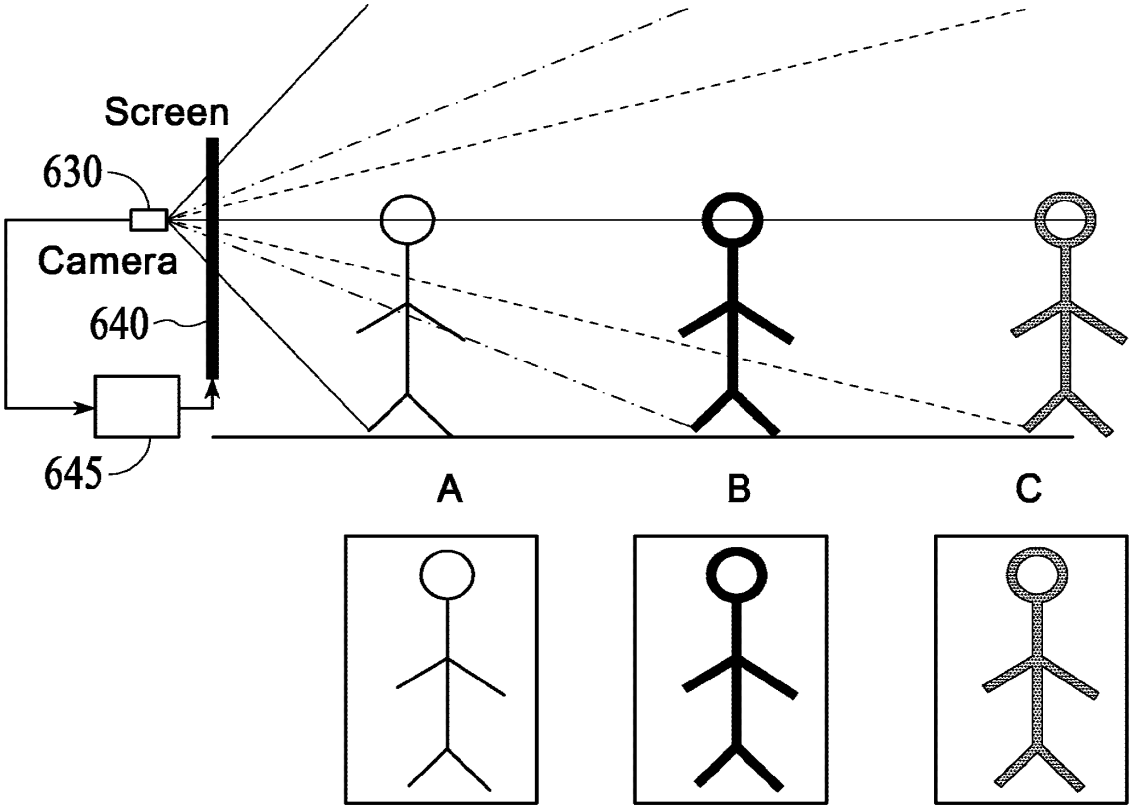

FIG. 6

Microsoft Ex. 1002 - Page 317 of 451

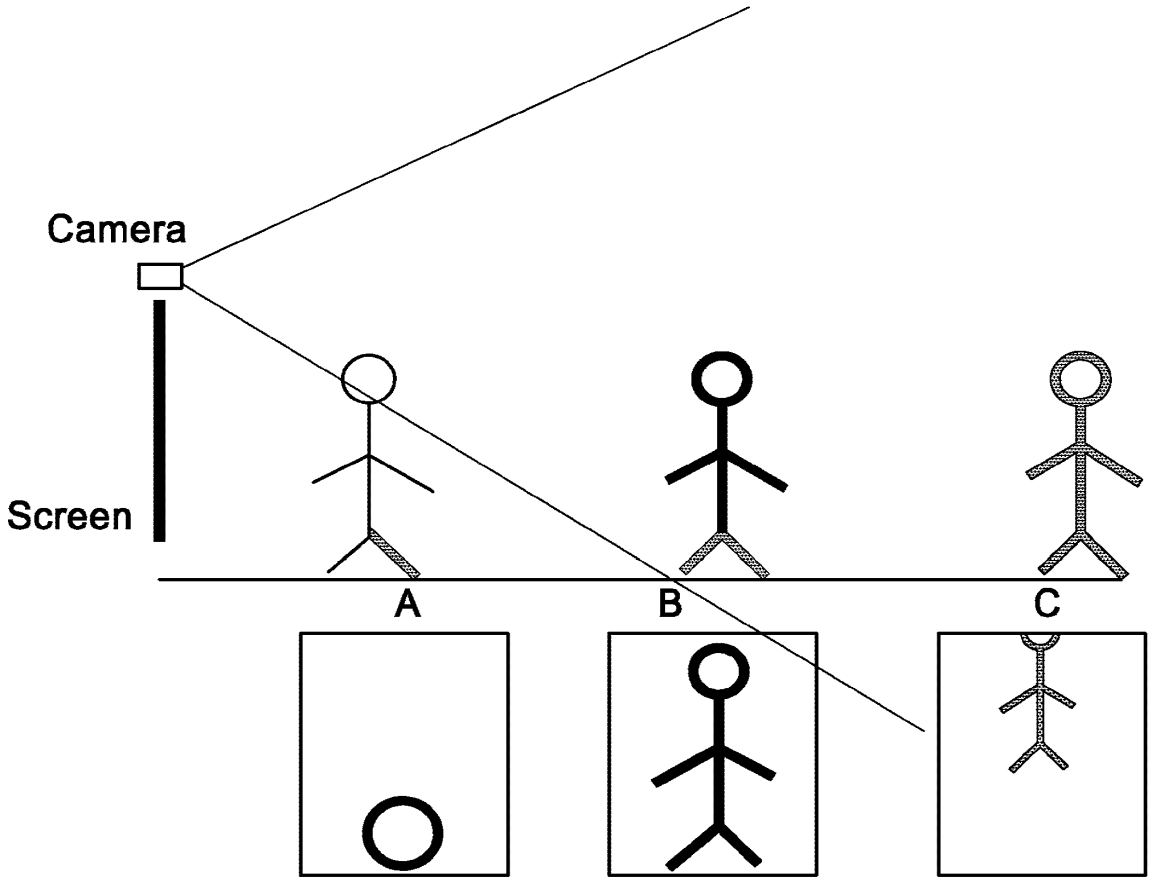

FIG. 7

Microsoft Ex. 1002 - Page 318 of 451

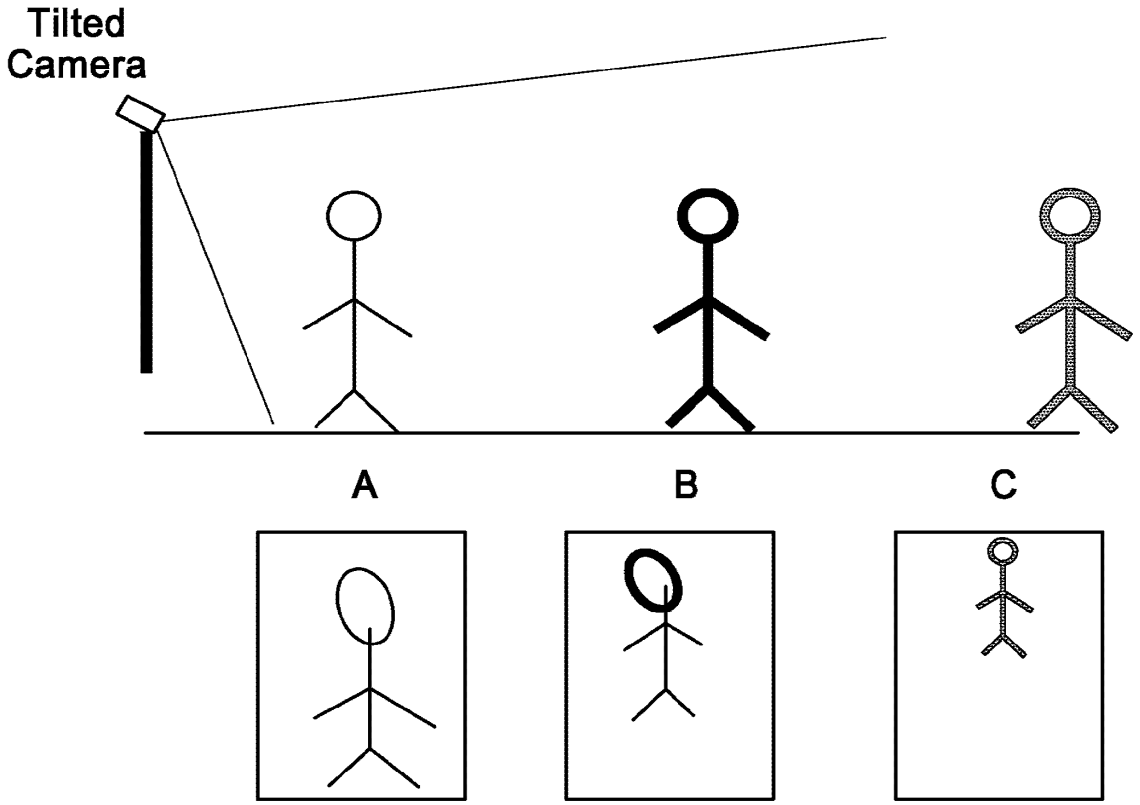

FIG. 8

Microsoft Ex. 1002 - Page 319 of 451

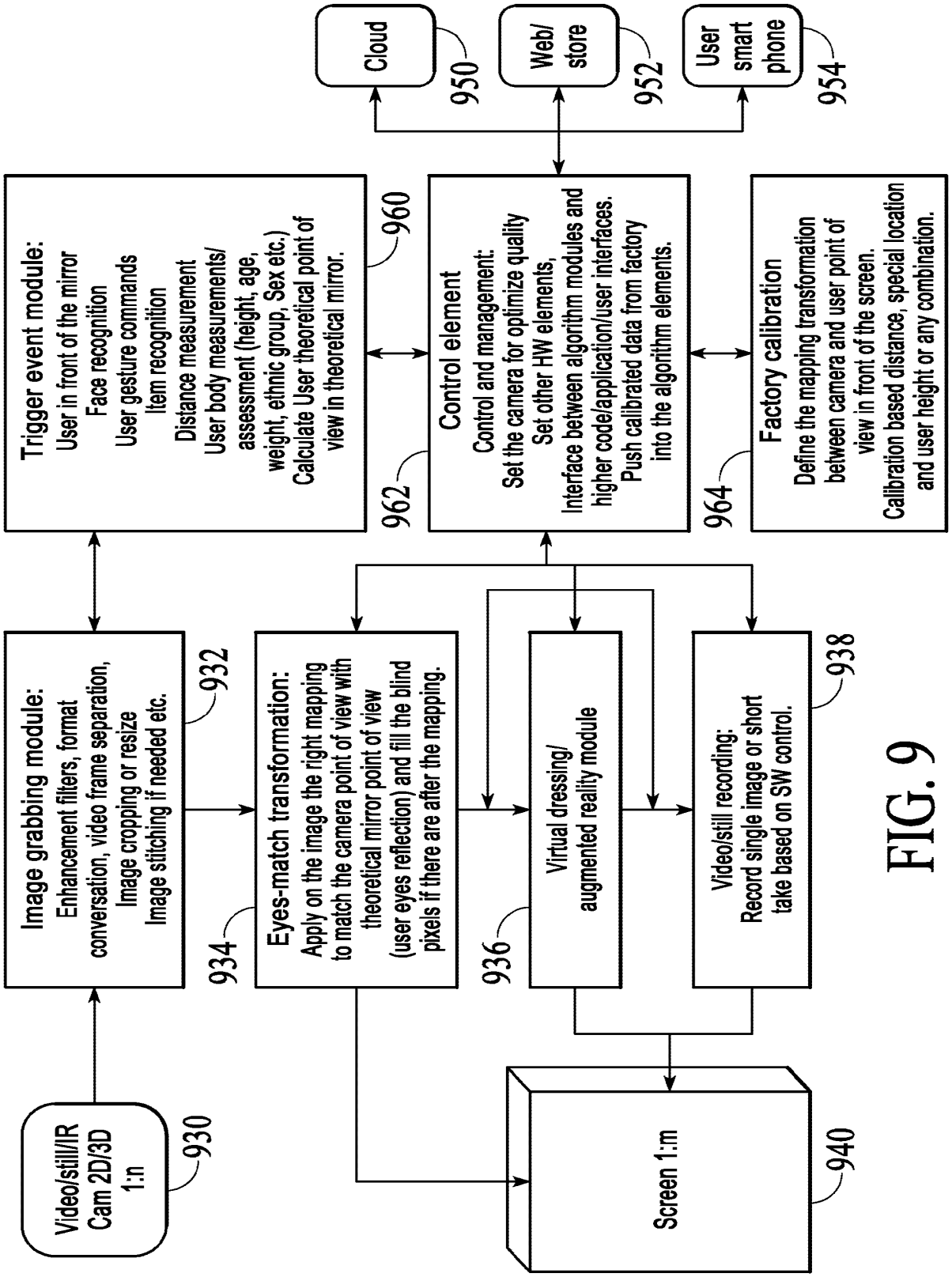
Cloud
950
Web/ store
952
User smart phone
954
Trigger event module:
User in front of the mirror
Face recognition
User gesture commands
Item recognition
Distance measurement
User body measurements/ assessment (height, age, weight, ethnic group, Sex etc.)
Calculate User theoretical point of view in theoretical mirror.
960
Control element
Control and management:
Set the camera for optimize quality
Set other HW elements,
Interface between algorithm modules and higher code/application/user interfaces.
Push calibrated data from factory into the algorithm elements.
962
Factory calibration
Define the mapping transformation between camera and user point of view in front of the screen.
Calibration based distance, special location and user height or any combination.
964
Image grabbing module:
Enhancement filters, format conversation, video frame separation, Image cropping or resize
Image stitching if needed etc.
932
Eyes-match transformation:
Apply on the image the right mapping to match the camera point of view with theoretical mirror point of view (user eyes reflection) and fill the blind pixels if there are after the mapping.
934
Virtual dressing/ augmented reality module
936
Video/still recording:
Record single image or short take based on SW control.
938
Video/still//IR Cam 2D/3D 1:n
930
Screen 1:m
940

FIG. 9

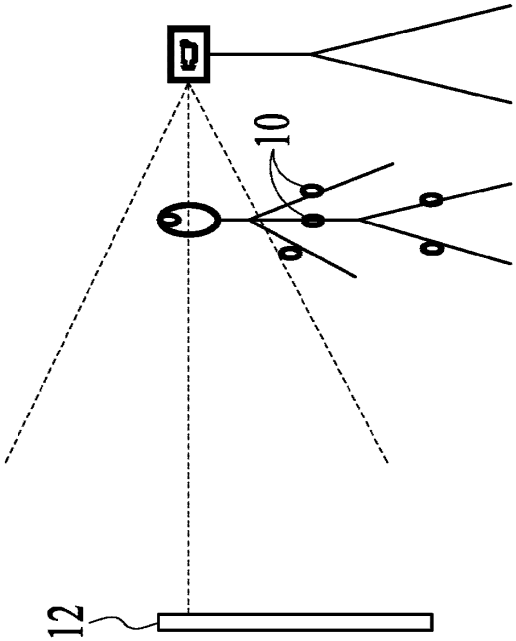

FIG. 10B

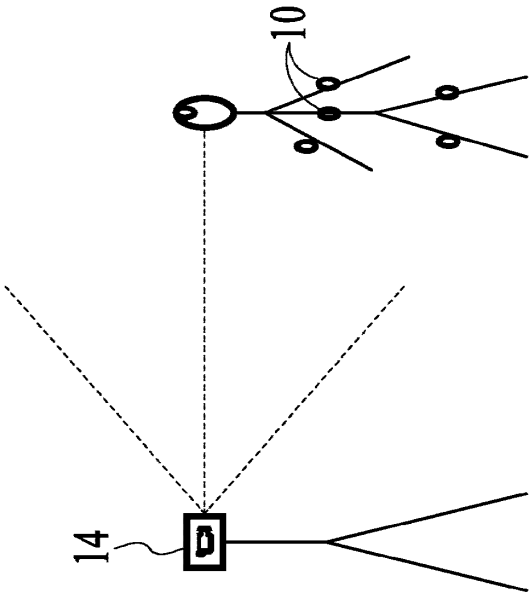

FIG. 10A

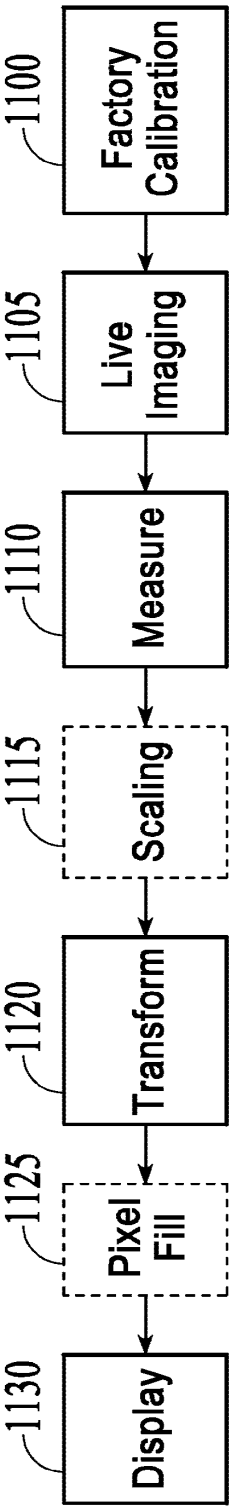

FIG. 11

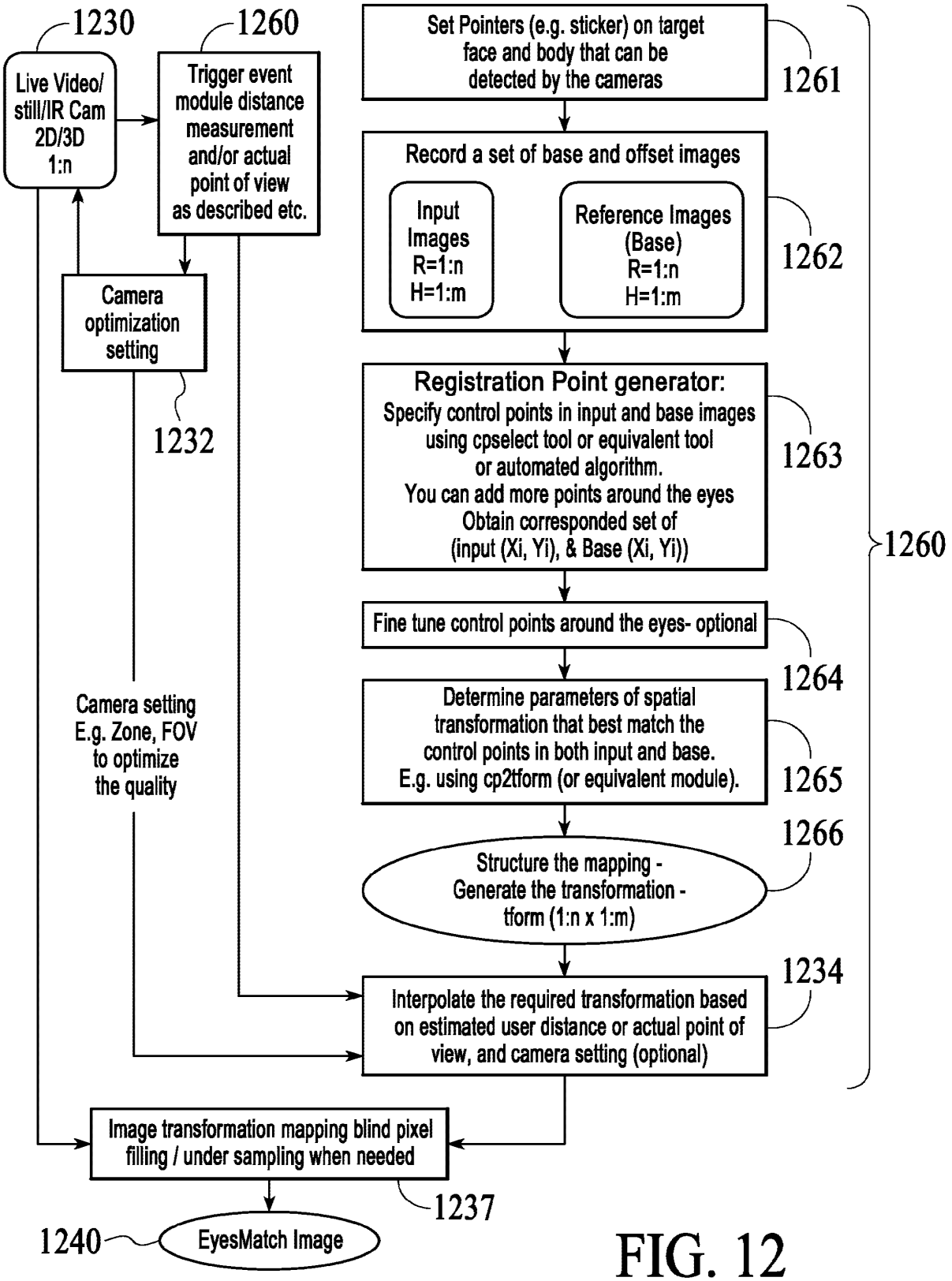
1230
Live Video/ still/IR Cam 2D/3D 1:n
1260
Trigger event module distance measurement and/or actual point of view as described etc.
Camera optimization setting
1232
Camera setting E.g. Zone, FOV to optimize the quality
Set Pointers (e.g. sticker) on target face and body that can be detected by the cameras
1261
Record a set of base and offset images
Input Images R=1:n H=1:m
Reference Images (Base) R=1:n H=1:m
1262
Registration Point generator:
Specify control points in input and base images using cpselect tool or equivalent tool or automated algorithm.
You can add more points around the eyes
Obtain corresponded set of (input (Xi, Yi), & Base (Xi, Yi))
1263
1260
Fine tune control points around the eyes- optional
1264
Determine parameters of spatial transformation that best match the control points in both input and base.
E.g. using cp2tform (or equivalent module).
1265
1266
Structure the mapping - Generate the transformation - tform (1:n x 1:m)
1234
Interpolate the required transformation based on estimated user distance or actual point of view, and camera setting (optional)
Image transformation mapping blind pixel filling / under sampling when needed
1237
1240
EyesMatch Image

FIG. 12

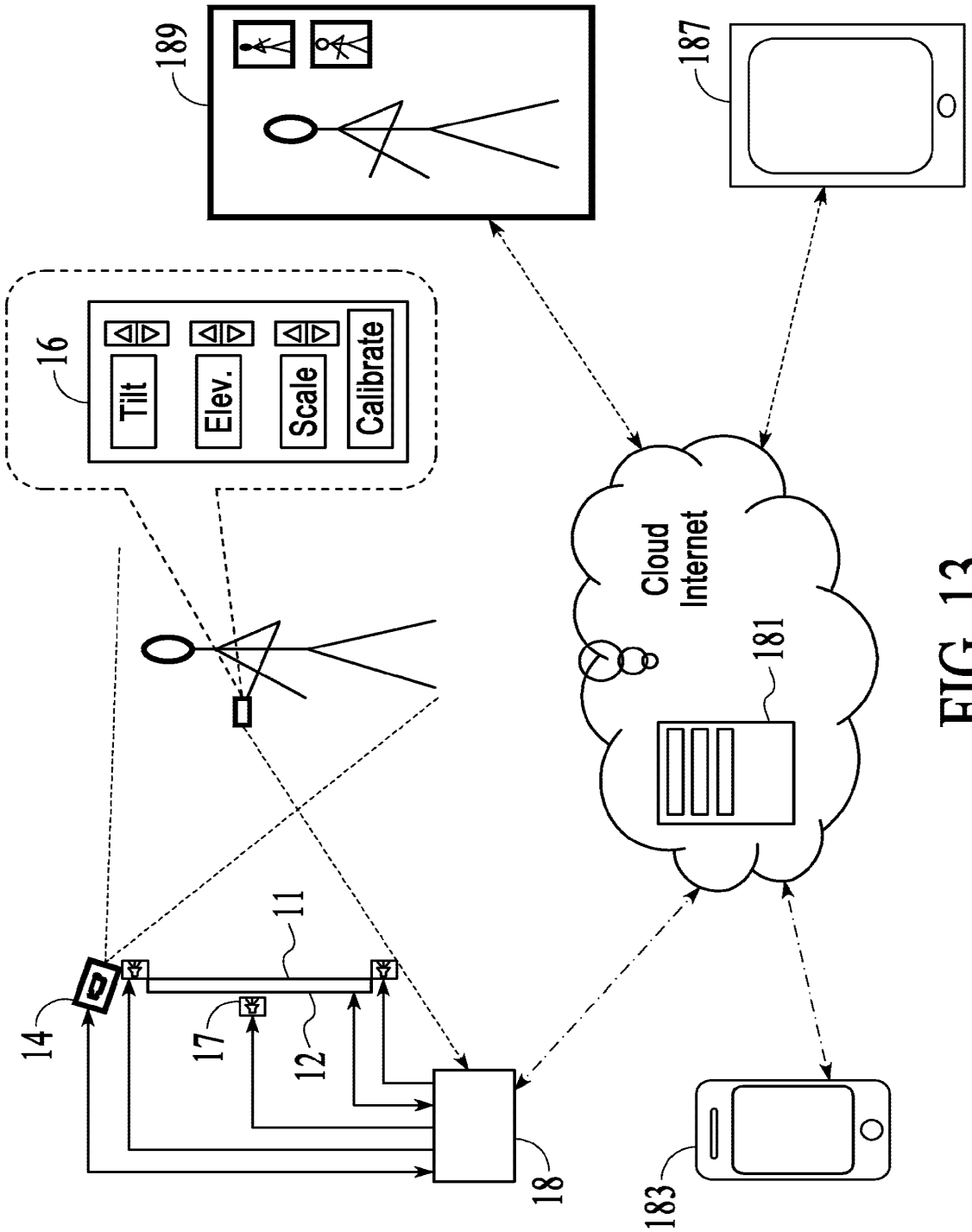
189
187
16
Tilt
Elev.
Scale
Calibrate
Cloud
Internet
181
11
14
17
12
18
183

FIG. 13

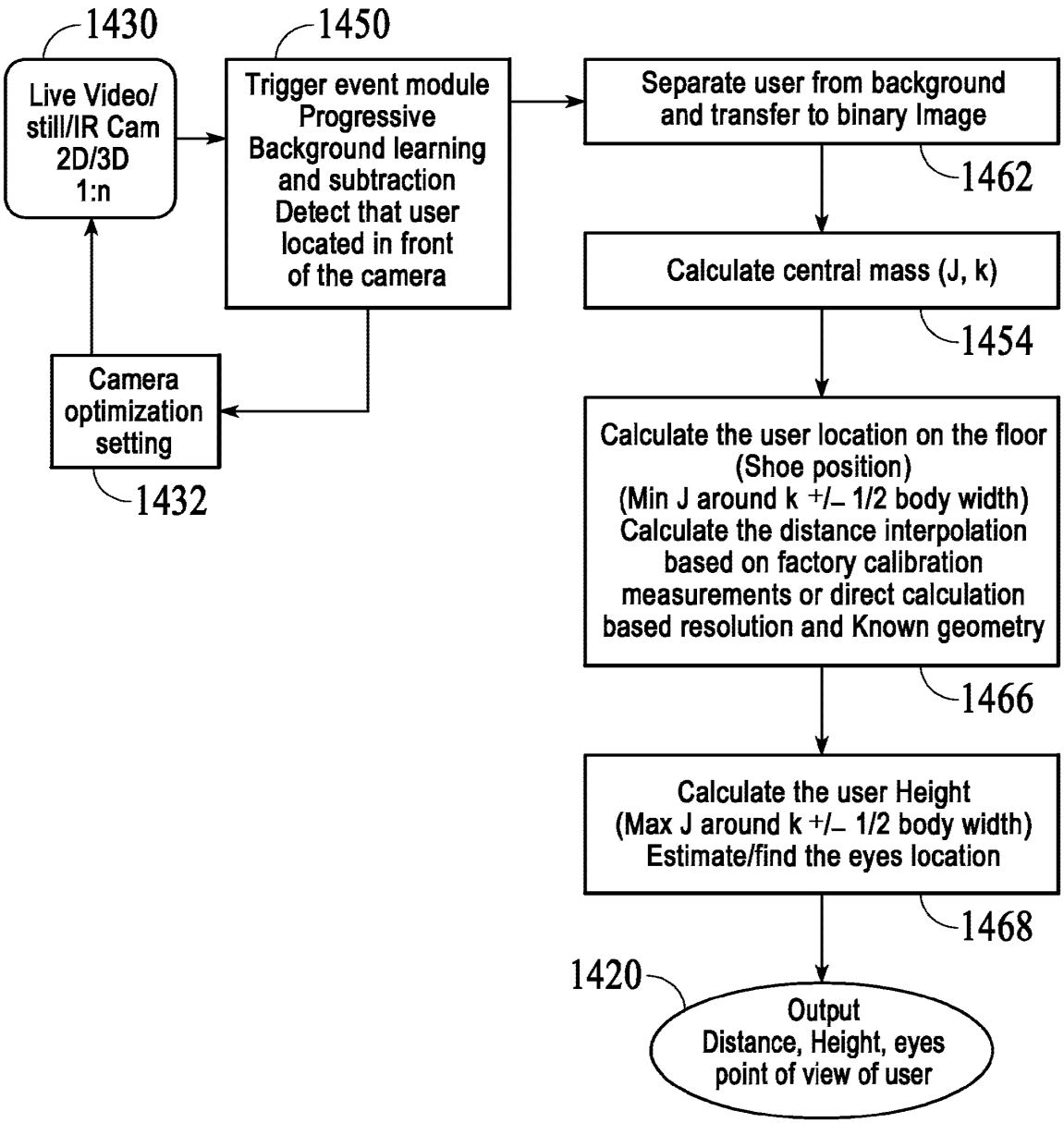
1430
Live Video/ still/IR Cam 2D/3D 1:n
1450
Trigger event module Progressive Background learning and subtraction Detect that user located in front of the camera
Separate user from background and transfer to binary Image
1462
Calculate central mass (J, k)
1454
Camera optimization setting
1432
Calculate the user location on the floor (Shoe position) (Min J around k +/– 1/2 body width) Calculate the distance interpolation based on factory calibration measurements or direct calculation based resolution and Known geometry
1466
Calculate the user Height (Max J around k +/– 1/2 body width) Estimate/find the eyes location
1468
1420
Output Distance, Height, eyes point of view of user

FIG. 14

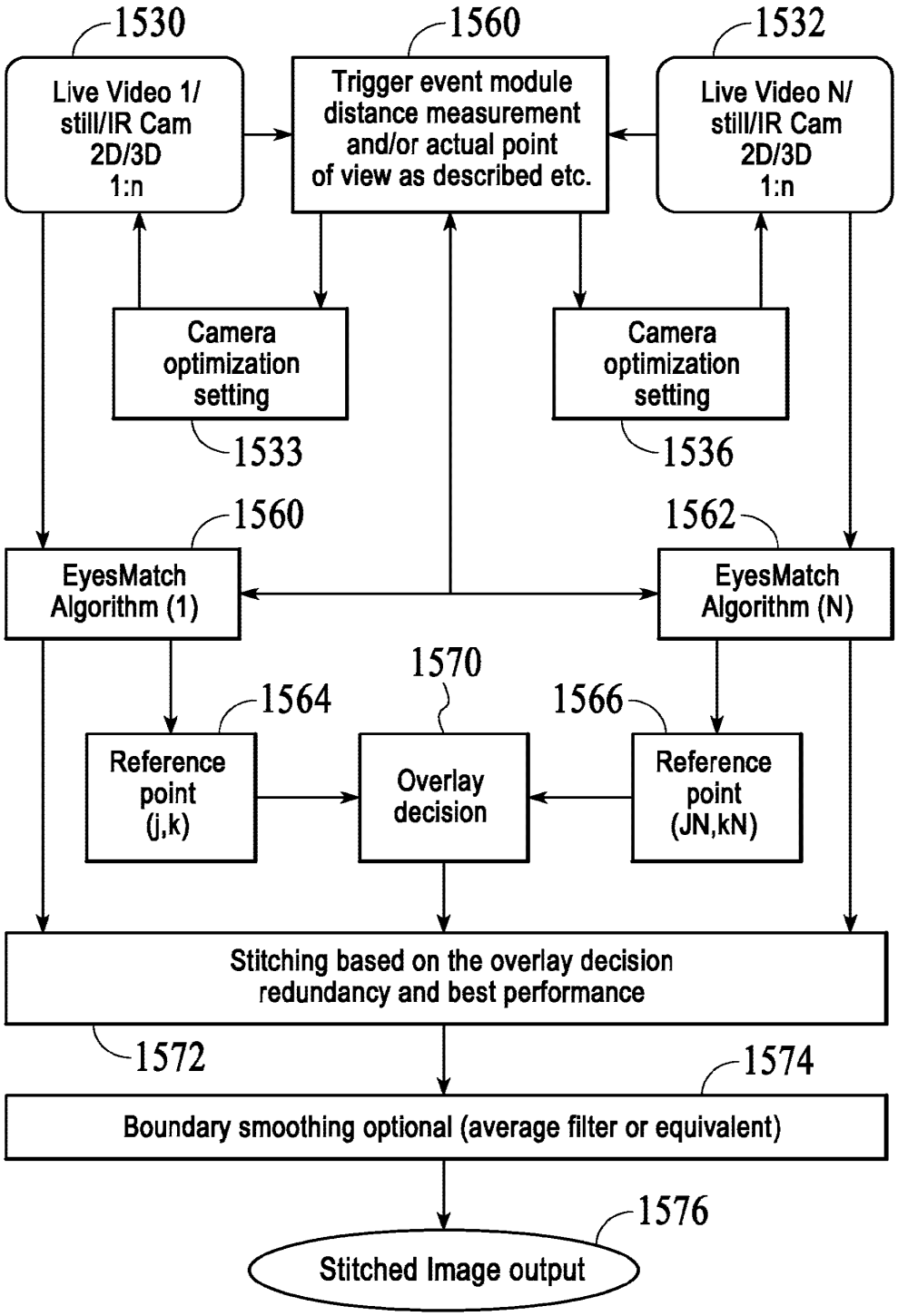
1530
Live Video 1/ still/IR Cam 2D/3D 1:n
1560
Trigger event module distance measurement and/or actual point of view as described etc.
1532
Live Video N/ still/IR Cam 2D/3D 1:n
Camera optimization setting
1533
Camera optimization setting
1536
1560
EyesMatch Algorithm (1)
1562
EyesMatch Algorithm (N)
1570
1564
Reference point (j,k)
Overlay decision
1566
Reference point (JN,kN)
Stitching based on the overlay decision redundancy and best performance
1572
1574
Boundary smoothing optional (average filter or equivalent)
1576
Stitched Image output

FIG. 15

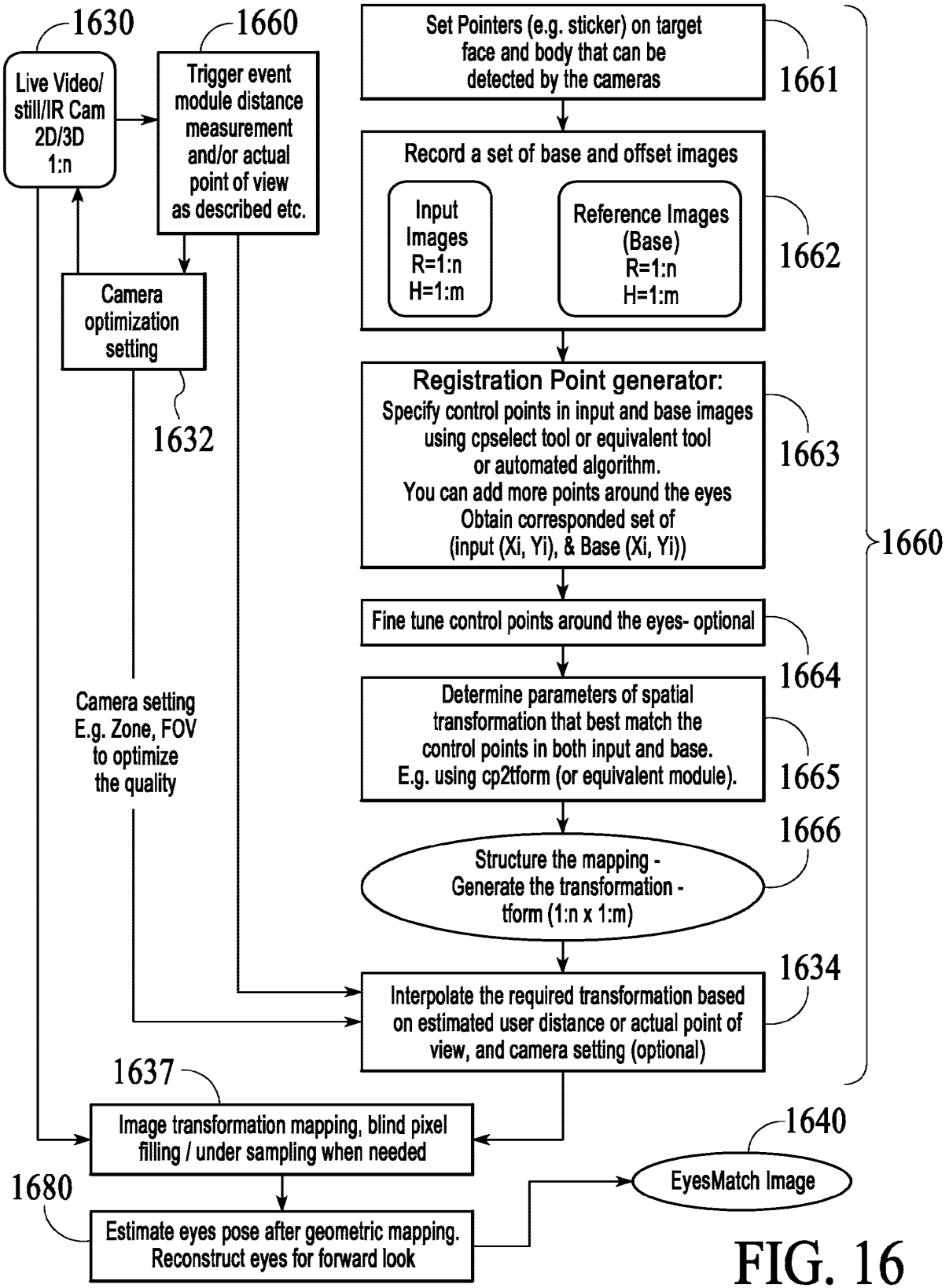
1630
Live Video/ still/IR Cam 2D/3D 1:n
1660
Trigger event module distance measurement and/or actual point of view as described etc.
Camera optimization setting
1632
Camera setting E.g. Zone, FOV to optimize the quality
Set Pointers (e.g. sticker) on target face and body that can be detected by the cameras
1661
Record a set of base and offset images
Input Images R=1:n H=1:m
Reference Images (Base) R=1:n H=1:m
1662
Registration Point generator:
Specify control points in input and base images using cpselect tool or equivalent tool or automated algorithm.
You can add more points around the eyes
Obtain corresponded set of (input (Xi, Yi), & Base (Xi, Yi))
1663
1660
Fine tune control points around the eyes- optional
1664
Determine parameters of spatial transformation that best match the control points in both input and base.
E.g. using cp2tform (or equivalent module).
1665
1666
Structure the mapping - Generate the transformation - tform (1:n x 1:m)
1634
Interpolate the required transformation based on estimated user distance or actual point of view, and camera setting (optional)
1637
Image transformation mapping, blind pixel filling / under sampling when needed
1640
EyesMatch Image
1680
Estimate eyes pose after geometric mapping. Reconstruct eyes for forward look

FIG. 16

PATENT COOPERATION TREATY

From the INTERNATIONAL SEARCHING AUTHORITY

To:
NIXON PEABODY LLP
P.O. BOX 60610
PALO ALTO, CA 94306

PCT

NOTIFICATION OF TRANSMITTAL OF THE INTERNATIONAL SEARCH REPORT AND THE WRITTEN OPINION OF THE INTERNATIONAL SEARCHING AUTHORITY, OR THE DECLARATION

(PCT Rule 44.1)

	Date of mailing *(day/month/year)* 06 MAY 2014
Applicant's or agent's file reference 067055-002001	**FOR FURTHER ACTION** See paragraphs 1 and 4 below
International application No. PCT/US 13/76253	International filing date *(day/month/year)* 18 December 2013 (18.12.2013)
Applicant VILCOVSKY, NISSI	

1. ☒ The applicant is hereby notified that the international search report and the written opinion of the International Searching Authority have been established and are transmitted herewith.

   Filing of amendments and statement under Article 19:
   The applicant is entitled, if he so wishes, to amend the claims of the international application (see Rule 46):

   When? The time limit for filing such amendments is normally two months from the date of transmittal of the international search report.

   Where? Directly to the International Bureau of WIPO, 34 chemin des Colombettes 1211 Geneva 20, Switzerland, Facsimile No.: +41 22 338 82 70

   For more detailed instructions, see *PCT Applicant's Guide*, International Phase, paragraphs 9.004 – 9.011.

2. ☐ The applicant is hereby notified that no international search report will be established and that the declaration under Article 17(2)(a) to that effect and the written opinion of the International Searching Authority are transmitted herewith.

3. ☐ **With regard to any protest** against payment of (an) additional fee(s) under Rule 40.2, the applicant is notified that:

   ☐ the protest together with the decision thereon has been transmitted to the International Bureau together with any request to forward the texts of both the protest and the decision thereon to the designated Offices.

   ☐ no decision has been made yet on the protest; the applicant will be notified as soon as a decision is made.

4. **Reminders**

   The applicant may submit comments on an informal basis on the written opinion of the International Searching Authority to the International Bureau. The International Bureau will send a copy of such comments to all designated Offices unless an international preliminary examination report has been or is to be established. Following the expiration of 30 months from the priority date, these comments will also be made available to the public.

   Shortly after the expiration of **18 months** from the priority date, the international application will be published by the International Bureau. If the applicant wishes to avoid or postpone publication, a notice of withdrawal of the international application, or of the priority claim, must reach the International Bureau before the completion of the technical preparations for international publication (Rules 90*bis*.1 and 90*bis*.3).

   Within **19 months** from the priority date, but only in respect of some designated Offices, a demand for international preliminary examination must be filed if the applicant wishes to postpone the entry into the national phase **until 30 months** from the priority date (in some Offices even later); otherwise, the applicant must, **within 20 months** from the priority date, perform the prescribed acts for entry into the national phase before those designated Offices.

   In respect of other designated Offices, the time limit of **30 months** (or later) will apply even if no demand is filed within 19 months.

   For details about the applicable time limits, Office by Office, see www.wipo.int/pct/en/texts/time_limits.html and the *PCT Applicant's Guide*, National Chapters.

Name and mailing address of the ISA/ Mail Stop PCT, Attn: ISA/US Commissioner for Patents P.O. Box 1450, Alexandria, Virginia 22313-1450 Facsimile No. 571-273-3201	Authorized officer Lee W. Young PCT Helpdesk: 571-272-4300 Telephone No. PCT OSP: 571-272-7774

Form PCT/ISA/220 (July 2010)

PATENT COOPERATION TREATY

PCT

INTERNATIONAL SEARCH REPORT

(PCT Article 18 and Rules 43 and 44)

Applicant's or agent's file reference 067055-002001	**FOR FURTHER ACTION**	see Form PCT/ISA/220 as well as, where applicable, item 5 below.
International application No. PCT/US 13/76253	International filing date *(day/month/year)* 18 December 2013 (18.12.2013)	(Earliest) Priority Date *(day/month/year)* 18 December 2012 (18.12.2012)
Applicant VILCOVSKY, NISSI		

This international search report has been prepared by this International Searching Authority and is transmitted to the applicant according to Article 18. A copy is being transmitted to the International Bureau.

This international search report consists of a total of 3 sheets.

☐ It is also accompanied by a copy of each prior art document cited in this report.

1. **Basis of the report**
   a. With regard to the **language**, the international search was carried out on the basis of:
      ☒ the international application in the language in which it was filed.
      ☐ a translation of the international application into _____ which is the language of a translation furnished for the purposes of international search (Rules 12.3(a) and 23.1(b)).
   b. ☐ This international search report has been established taking into account the **rectification of an obvious mistake** authorized by or notified to this Authority under Rule 91 (Rule 43.6*bis*(a)).
   c. ☐ With regard to any **nucleotide and/or amino acid sequence** disclosed in the international application, see Box No. I.
2. ☐ **Certain claims were found unsearchable** (see Box No. II).
3. ☐ **Unity of invention is lacking** (see Box No. III).
4. With regard to the **title**,
   ☒ the text is approved as submitted by the applicant.
   ☐ the text has been established by this Authority to read as follows:
5. With regard to the **abstract**,
   ☒ the text is approved as submitted by the applicant.
   ☐ the text has been established, according to Rule 38.2, by this Authority as it appears in Box No. IV. The applicant may, within one month from the date of mailing of this international search report, submit comments to this Authority.
6. With regard to the **drawings**,
   a. the figure of the **drawings** to be published with the abstract is Figure No. 13
      ☒ as suggested by the applicant.
      ☐ as selected by this Authority, because the applicant failed to suggest a figure.
      ☐ as selected by this Authority, because this figure better characterizes the invention.
   b. ☐ none of the figures is to be published with the abstract.

Form PCT/ISA/210 (first sheet) (July 2009)

INTERNATIONAL SEARCH REPORT

International application No.
PCT/US 13/76253

A. CLASSIFICATION OF SUBJECT MATTER
IPC(8) - G06T 15/00 (2014.01)
USPC - 348/33.02
According to International Patent Classification (IPC) or to both national classification and IPC

B. FIELDS SEARCHED

Minimum documentation searched (classification system followed by classification symbols)
USPC: 348/33.02

Documentation searched other than minimum documentation to the extent that such documents are included in the fields searched
USPC: 348/333.01,333.02,333.03,333.05,333.06,333.12; 345/427,581,619; 382/295-297 (text search - see terms below)

Electronic data base consulted during the international search (name of data base and, where practicable, search terms used)
PatBase; PubWEST; Google
Search Terms Used: mimic, mirror, image, transform, camera, map, size, resize, image, flip, reverse, eye level, elevation, height, tilt, barrel effect, fish eye, distance, resolution, varying, triangulate, shoe

C. DOCUMENTS CONSIDERED TO BE RELEVANT

Category*	Citation of document, with indication, where appropriate, of the relevant passages	Relevant to claim No.
Y --- A	US 2007/0132863 A1 (DEGUCHI) 14 June 2007 (14.06.2007), entire document especially paras [0033], [0036], [0044], [0048], [0082]	1-17, 19 ---------- 18, 20
Y --- A	US 2011/0210970 A1 (SEGAWA) 01 September 2011 (01.09.2011), para [0052]-[0063]	1-17, 19 ---------- 18, 20
Y	US 2007/0120954 A1 (ALLEN et al.) 31 May 2007 (31.05.2007), entire document especially paras [0008], [0012]	2, 4, 5
Y	US 2012/0177284 A1 (WANG) 12 July 2012 (12.07.2012), entire document especially para [0077]	7
Y	US 2009/0051779 A1 (ROLSTON) 26 February 2009 (26.02.2009), entire document especially paras [0067]-[0068]	9
Y	US 2005/0047629 A1 (FARRELL et al.) 03 March 2005 (03.03.2005), entire document especially para [0023]	10
Y -- A	US 2005/259158 A1 (JACOB et al.) 24 November 2005 (24.11.2005), entire document especially paras [0015], [0085]	11 ---- 18
Y	US 6,417,850 B1 (KANG) 09 July 2002 (09.07.2002), entire document especially col 9, lns 36-55	12

☒ Further documents are listed in the continuation of Box C. ☐

* Special categories of cited documents:
"A" document defining the general state of the art which is not considered to be of particular relevance
"E" earlier application or patent but published on or after the international filing date
"L" document which may throw doubts on priority claim(s) or which is cited to establish the publication date of another citation or other special reason (as specified)
"O" document referring to an oral disclosure, use, exhibition or other means
"P" document published prior to the international filing date but later than the priority date claimed
"T" later document published after the international filing date or priority date and not in conflict with the application but cited to understand the principle or theory underlying the invention
"X" document of particular relevance; the claimed invention cannot be considered novel or cannot be considered to involve an inventive step when the document is taken alone
"Y" document of particular relevance; the claimed invention cannot be considered to involve an inventive step when the document is combined with one or more other such documents, such combination being obvious to a person skilled in the art
"&" document member of the same patent family

Date of the actual completion of the international search	Date of mailing of the international search report
01 April 2014 (01.04.2014)	06 MAY 2014
Name and mailing address of the ISA/US Mail Stop PCT, Attn: ISA/US, Commissioner for Patents P.O. Box 1450, Alexandria, Virginia 22313-1450 Facsimile No. 571-273-3201	Authorized officer: Lee W. Young PCT Helpdesk: 571-272-4300 PCT OSP: 571-272-7774

Form PCT/ISA/210 (second sheet) (July 2009)

INTERNATIONAL SEARCH REPORT

International application No.
PCT/US 13/76253

C (Continuation). DOCUMENTS CONSIDERED TO BE RELEVANT

Category*	Citation of document, with indication, where appropriate, of the relevant passages	Relevant to claim No.
Y	US 2010/0097442 A1 (LABLANS) 22 April 2010 (22.04.2010), entire document especially para [0065]	15
Y -- A	US 2008/0151092 A1 (VILCOVSKY) 26 June 2008 (26.06.2008), entire document especially paras[0029], [0050]	17, 19 ---------- 18
X, P	US 2013/0229482 A1 (VILCOVSKY) 05 September 2013 (05.09.2013), entire document	1-20
A	US 2002/0196333 A1 (GORISCHEK) 26 December 2002 (26.12.2002), entire document	1-20
A	US 2005/0018140 A1 (ISHIZAKI et al.) 27 January 2005 (27.01.2005), entire document	1-20
A	US 2003/0085866 A1 (BIMBER et al.) 08 May 2003 (08.05.2003), entire document	1-20
A	US 2006/0007303 A1 (MILTON) 12 January 2006 (12.01.2006), entire document	1-20
A	US 2012/0169850 A1 (KIM et al.) 05 July 2012 (05.07.2012), entire document	1-20

Form PCT/ISA/210 (continuation of second sheet) (July 2009)

PATENT COOPERATION TREATY

From the
INTERNATIONAL SEARCHING AUTHORITY

To: NIXON PEABODY LLP
P.O. BOX 60610
PALO ALTO, CA 94306

PCT

WRITTEN OPINION OF THE
INTERNATIONAL SEARCHING AUTHORITY

(PCT Rule 43*bis*.1)

Date of mailing *(day/month/year)*	06 MAY 2014
Applicant's or agent's file reference 067055-002001	**FOR FURTHER ACTION** See paragraph 2 below

International application No.	International filing date *(day/month/year)*	Priority date *(day/month/year)*
PCT/US 13/76253	18 December 2013 (18.12.2013)	18 December 2012 (18.12.2012)

International Patent Classification (IPC) or both national classification and IPC
IPC(8) - G06T 15/00 (2014.01)
USPC - 348/33.02

Applicant VILCOVSKY, NISSI

1. This opinion contains indications relating to the following items:

- [x] Box No. I Basis of the opinion
- [ ] Box No. II Priority
- [ ] Box No. III Non-establishment of opinion with regard to novelty, inventive step and industrial applicability
- [ ] Box No. IV Lack of unity of invention
- [x] Box No. V Reasoned statement under Rule 43*bis*.1(a)(i) with regard to novelty, inventive step or industrial applicability; citations and explanations supporting such statement
- [ ] Box No. VI Certain documents cited
- [ ] Box No. VII Certain defects in the international application
- [ ] Box No. VIII Certain observations on the international application

2. **FURTHER ACTION**

If a demand for international preliminary examination is made, this opinion will be considered to be a written opinion of the International Preliminary Examining Authority ("IPEA") except that this does not apply where the applicant chooses an Authority other than this one to be the IPEA and the chosen IPEA has notified the International Bureau under Rule 66.1 *bis*(b) that written opinions of this International Searching Authority will not be so considered.

If this opinion is, as provided above, considered to be a written opinion of the IPEA, the applicant is invited to submit to the IPEA a written reply together, where appropriate, with amendments, before the expiration of 3 months from the date of mailing of Fom PCT/ISA/220 or before the expiration of 22 months from the priority date, whichever expires later.

For further options, see Form PCT/ISA/220.

Name and mailing address of the ISA/US	Date of completion of this opinion	Authorized officer:
Mail Stop PCT, Attn: ISA/US Commissioner for Patents P.O. Box 1450, Alexandria, Virginia 22313-1450 Facsimile No. 571-273-3201	01 April 2014 (01.04.2014)	Lee W. Young PCT Helpdesk: 571-272-4300 PCT OSP: 571-272-7774

Form PCT/ISA/237 (cover sheet) (July 2011)

WRITTEN OPINION OF THE INTERNATIONAL SEARCHING AUTHORITY

International application No.
PCT/US 13/76253

Box No. I Basis of this opinion

1. With regard to the **language**, this opinion has been established on the basis of:

   [X] the international application in the language in which it was filed.

   [ ] a translation of the international application into _____ which is the language of a translation furnished for the purposes of international search (Rules 12.3(a) and 23.1(b)).

2. [ ] This opinion has been established taking into account the **rectification of an obvious mistake** authorized by or notified to this Authority under Rule 91 (Rule 43*bis*.1(a))

3. With regard to any **nucleotide and/or amino acid sequence** disclosed in the international application, this opinion has been established on the basis of a sequence listing filed or furnished:

   a. (means)

   [ ] on paper

   [ ] in electronic form

   b. (time)

   [ ] in the international application as filed

   [ ] together with the international application in electronic form

   [ ] subsequently to this Authority for the purposes of search

4. [ ] In addition, in the case that more than one version or copy of a sequence listing has been filed or furnished, the required statements that the information in the subsequent or additional copies is identical to that in the application as filed or does not go beyond the application as filed, as appropriate, were furnished.

5. Additional comments:

WRITTEN OPINION OF THE INTERNATIONAL SEARCHING AUTHORITY

International application No.
PCT/US 13/76253

Box No. V **Reasoned statement under Rule 43*bis*.1(a)(i) with regard to novelty, inventive step or industrial applicability; citations and explanations supporting such statement**

1. Statement

Novelty (N)	Claims	1-20	YES
	Claims	None	NO
Inventive step (IS)	Claims	18, 20	YES
	Claims	1-17, 19	NO
Industrial applicability (IA)	Claims	1-20	YES
	Claims	None	NO

2. Citations and explanations:

Claims 1, 3, 6, 8, 13, 14, and 16 lack an inventive step under PCT Article 33(3) as being obvious over US 2007/0132863 A1 (DEGUCHI) in view of US 2011/0210970 A1 (Segawa).

Claim 1; Deguchi discloses a method for operating a system having a monitor (para [0036]), a camera (para [0022]), and a processor (12) (para [0033]), so as to display a mirror-mimicking image on the monitor (para [0082]), by performing the non-ordered steps comprising: obtaining a digital image from a camera (para [0027]); flipping the image about a vertical axis so as to reverse right and left sides of the image (para [0082]); applying a transformation mapping to the image (paras [0044], [0082]); resizing the image to reduce variations caused by changes in object's distance to the camera (para [0048], resized based on focal distance and zoom ratio); displaying the image on the monitor after performing the flipping, transformation mapping, and resizing (para [0036]). Deguchi does not specifically disclose the transformation mapping to modify the image such that it appears to mimic a reflection of a mirror; however, Segawa discloses a system to display a mirror-mimicking image, including transformations (para [0053]) to modify the image such that it appears to mimic a reflection of a mirror (para [0063]). It would have been obvious to one of skill in the art to use the transformations, as taught by Segawa, in the method of Deguchi, to provide natural image orientation for the image displayed in the monitor (see Segawa para [0063]).

Claim 3; Deguchi in view of Segawa discloses the method of Claim 1, but does not specifically discloses that the transformation mapping comprises at least a tilt transformation and an elevation transformation, but Deguchi discloses combining images from cameras whose locations are unrestricted and Segawa discloses a variety of transformations among others (para [0053]). It would have been obvious to one of skill in the art to optimize the transformations wherein the .others. include both tilt and elevation transformations, to optimize the rendering of the displayed image.

Claim 6; Deguchi in view of Segawa discloses the method of Claim 1. Deguchi further discloses that the step of resizing the image (paras [0048], [0051]). while neither Deguchi nor Segawa specifically discloses resizing is performed integral to the step of applying the transformation mapping, it would have been obvious to one of skill in the art to optimize the transformations wherein resizing is performed integral to the step of applying the transformation mapping, to optimize the rendering of the displayed image.

Claim 8; Deguchi in view of Segawa discloses the method of Claim 1. Segawa further discloses applying a translation transformation to move the image within display area of the monitor (para [0053], [0055], viewpoint transformation to alter position).

Claim 13; Deguchi in view of Segawa discloses the method of Claim 1. Deguchi further discloses obtaining a second digital image from a second camera (para [0023]); flipping the second image about a vertical axis so as to reverse right and left sides of the second image (para [0082]); applying a transformation mapping (paras [0044], [0082]); resizing the second image to reduce variations caused by changes in object's distance to the second camera (para [0048] (resized based on focal distance and zoom ratio) stitching the image and the second image after performing the flipping, transformation mapping, and resizing, to thereby obtain a stitched image (para [0028], [0035]); displaying the stitched image on the monitor (para [0036]). Deguchi does not specifically disclose the transformation mapping to modify the second image such that it appears to mimic a reflection of a mirror; however, Segawa discloses a system to display a mirror-mimicking image, including transformations (para [0053]) with multiple images (para [0055]) to modify the image such that it appears to mimic a reflection of a mirror (para [0063]). It would have been obvious to one of skill in the art to use the transformations, as taught by Segawa, in the method of Deguchi, to provide natural image orientation for the image displayed in the monitor (see Segawa para [0063]).

Claim 14; Deguchi in view of Segawa discloses the method of Claim 13. Deguchi further discloses that field of views of the camera and of the second camera overlap, and further comprising the step of overlay decision to determine best location in overlapping parts of the field of views to perform the stitching (paras [0028], [0055] and [0059]).

-- Please see continuation in supplemental box .

WRITTEN OPINION OF THE
INTERNATIONAL SEARCHING AUTHORITY

International application No.
PCT/US 13/76253

Supplemental Box

In case **the space in any of the preceding boxes is not sufficient.**
Continuation of:
Box V. 2. Citations and explanations:

Claim 16; Deguchi in view of Segawa discloses the method of Claim 1. Deguchi further discloses obtaining a second digital image from a second camera (para [0023]); flipping the second image about a vertical axis so as to reverse right and left sides of the second image (para [0082]); applying a transformation mapping to the second image to modify the second image (paras [0044], [0082]); resizing the second image to reduce variations caused by changes in object's distance to the second camera (para [0048]); displaying the image and the second image after performing the flipping, transformation mapping, and resizing to thereby obtain a non-planar image in a three dimensional coordiante system (paras [0029], [0036]), but does not specifically disclose the transformation mapping to modify the image such that it appears to mimic a reflection of a mirror and obtaining a three-dimensional image on the monitor; however, Segawa discloses a system to display a mirror-mimicking image, including transformations (para [0053]) with multiple images (para [0055]) to modify the image such that it appears to mimic a reflection of a mirror (para [0063]) and obtaining a three-dimensional image on the monitor (para [0055]). It would have been obvious to one of skill in the art to use the transformations and three-dimensional display, as taught by Segawa, in the method of Deguchi, to provide natural image orientation for the image displayed in the monitor (see Segawa para [0063]).

Claims 2, 4 and 5 lack an inventive step under PCT Article 33(3) as being obvious over Deguchi in view of Segawa and further in view of US 2007/0120954 A1 to ALLEN et al. (hereinafter Allen).

Claim 2; Deguchi in view of Segawa discloses the method of Claim 1, but does not specifically disclose that the transformation mapping renders an image appearing to have been taken from a camera positioned at eye-level height and pointing horizontally. However, Allen discloses that the rendering an image appearing to have been taken from a camera positioned at eye-level height and pointing horizontally (paras [0008], [0012]). It would have been obvious to a person skilled in the art to modify the method of Deguchi in view of Segawa in accordance with the teachings of Allen such that the transformation mapping renders an image appearing to have been taken from a camera positioned at eye-level height and pointing horizontally, since it would provide eye contact between the image and the user (see Allen para [0008]) and provide the desired angle of view (see Deguchi para [0082]).

Claim 4; Deguchi in view of Segawa discloses the method of Claim 3, but does not specifically disclose that the tilt transformation modifies an input image taken with a non-horizontally pointing camera and transforming the image to appear as if the camera was pointed straight horizontally.
Allen discloses an input image taken with a non-horizontally pointing camera and rendering the image to appear as if the camera was pointed straight horizontally(paras [0008], [0012]). It would have been obvious to a person skilled in the art to modify the method of Deguchi in view of Segawa in accordance with the teachings of Allen and through routine experimentation such that the tilt transformation modifies an input image taken with a non-horizontally pointing camera and transforming the image to appear as if the camera was pointed straight horizontally, since it would provide eye contact between the image and the user (see Allen para [0008]) and provide the desired angle of view (see Deguchi para [0082]).

Claim 5; Deguchi in view of Segawa discloses the method of Claim 3, but does not specifically disclose that the elevation transformation modifies an input image taken with a camera positioned at arbitrary height and transforming the image to appear as if the camera was positioned at a user's eye level. Allen discloses an input image taken with a camera positioned at arbitrary height and rendering the image to appear as if the camera was positioned at a user's eye level(paras [0008], [0012]). It would have been obvious to a person skilled in the art to modify the method of Deguchi in view of Segawa in accordance with the teachings of Allen and through routine experimentation such that the elevation transformation modifies an input image taken with a camera positioned at arbitrary height and transforming the image to appear as if the camera was positioned at a user's eye level, since it would provide eye contact between the image and the user (see Allen para [0008]) and provide the desired angle of view (see Deguchi para [0082]).

Claim 7 lacks an inventive step under PCT Article 33(3) as being obvious over Deguchi in view of Segawa and further in view of US 2012/0177284 A1 (WANG).

Claim 7; Deguchi in view of Segawa discloses the method of Claim 1. Deguchi further discloses obtaining a reference image (para [0059]), but does not specifically disclose performing registration of the digital image with the reference image; or using data obtained from the registration to generate the transformation mapping. However, Wang discloses performing registration of the digital image with the reference image (para [0077]); and using data obtained from the registration to generate the transformation mapping (para [0076]-[0078]). It would have been obvious to a person skilled in the art to modify the method of Deguchi in view of Segawa in accordance with the teachings of Wang so as to include performing registration of the digital image with the reference image and using data obtained from the registration to generate the transformation mapping, since it would allow a 3D rendering from 2D data (see Wang para [0077]).

Claim 9 lacks an inventive step under PCT Article 33(3) as being obvious over Deguchi in view of Segawa and further in view of US 2009/0051779 A1 (ROLSTON)

Claim 9; Deguchi in view of Segawa discloses the method of Claim 1, but does not specifically disclose changing illumination intensity of individual or groups of pixels of the monitor, so as to enhance shading or illumination in the image. However, Rolston discloses changing illumination intensity of individual or groups of pixels of the monitor, so as to enhance shading or illumination in the image (paras [0067]-[0068]). It would have been obvious to a person skilled in the art to modify the method of Deguchi in view of Segawa in accordance with the teachings of Rolston so as to include changing illumination intensity of individual or groups of pixels of the monitor, so as to enhance shading or illumination in the image, since it would highlight specific features of the image (see Rolston para [0067]).

-- Please see continuation in supplemental box .

WRITTEN OPINION OF THE
INTERNATIONAL SEARCHING AUTHORITY

International application No.
PCT/US 13/76253

Supplemental Box

In case the space in any of the preceding boxes is not sufficient.
Continuation of:
Box V. 2. Citations and explanations:

Claim 10 lacks an inventive step under PCT Article 33(3) as being obvious over Deguchi in view of Segawa and further in view of US 2005/0047629 A1 to FARRELL et al. (hereinafter Farrell).

Claim 10; Deguchi in view of Segawa discloses the method of Claim 1, but does not specifically disclose applying at least one of a barrel-effect transformation and a fish-eye transformation. However,Farrell discloses applying at least one of a barrel-effect transformation and a fish-eye transformation (para [0023]). It would have been obvious to a person skilled in the art to modify the method of Deguchi in view of Segawa in accordance with the teachings of Farrell so as to include applying at least one of a barrel-effect transformation and a fish-eye transformation, since it would allow for expanding a target area such as the user's face while leaving objects on the edge unaffected and resolve interactive component conflicts (see Farrell para [0023]-[0024]).

Claim 11 lacks an inventive step under PCT Article 33(3) as being obvious over Deguchi in view of Segawa and further in view of US 2005/0259158 A1 to JACOB et al. (hereinafter Jacob).

Claim 11; Deguchi in view of Segawa discloses the method of Claim 1, but does not specifically disclose determining distance to a user appearing in the image; or varying resolution of the image according to the distance. However, Jacob discloses determining distance to a user appearing in the image (para [0015]); and varying resolution of the image according to the distance (para [0085]). It would have been obvious to a person skilled in the art to modify the method of Deguchi in view of Segawa in accordance with the teachings of Jacob so as to include determining distance to a user appearing in the image and so as to include varying resolution of the image according to the distance, since it would provide a uniform scale (see Jacob para [0085]).

Claim 12 lacks an inventive step under PCT Article 33(3) as being obvious over Deguchi in view of Segawa and further in view of US 6,417,850 B1 (KANG).

Claim 12; Deguchi in view of Segawa discloses the method of Claim 1, but does not specifically disclose a step of pixel filling, wherein pixel image is extrapolated into empty pixels left after applying the transformation mapping. However, Kang discloses a step of pixel filling, wherein pixel image is extrapolated into empty pixels left after applying the transformation mapping (col 9, lns 36-55). It would have been obvious to a person skilled in the art to modify the method of Deguchi in view of Segawa in accordance with the teachings of Kang so as to include a step of pixel filling, wherein pixel image is extrapolated into empty pixels left after applying the transformation mapping, since it would fill in voids created by the transform.

Claim 15 lacks an inventive step under PCT Article 33(3) as being obvious over Deguchi in view of Segawa and further in view of US 2010/0097442 A1 (LABLANS).

Claim 15; Deguchi in view of Segawa discloses the method of Claim 13, but does not specifically disclose a smoothing operation to correct artifacts caused by the step of stitching. However, Lablans discloses a smoothing operation to correct artifacts caused by the step of stitching (para [0065]). It would have been obvious to a person skilled in the art to modify the method of Deguchi in view of Segawa in accordance with the teachings of Lablans so as to include a smoothing operation to correct artifacts caused by the step of stitching, since it would remove a transition edge (see Lablans para [0065]).

Claims 17 and 19 lack an inventive step under PCT Article 33(3) as being obvious over Deguchi in view of Segawa and further in view of US 2008/0151092 A1 (VILCOVSKY).

Claim 17; Deguchi in view of Segawa discloses the method of Claim 1, but does not specifically disclose that the non-ordered steps are performed on a series of images of a live video feed from the camera. However, Vilcovsky discloses that the non-ordered steps are performed on a series of images of a live video feed from the camera (para [0050]). It would have been obvious to a person skilled in the art to modify the method of Deguchi in view of Segawa in accordance with the teachings of Vilcovsky such that the non-ordered steps are performed on a series of images of a live video feed from the camera, since it would provide a real time mirror simulation.

Claim 19; Deguchi in view of Vilcovsky discloses the method of Claim 17. Vilcovsky further discloses storing the live video feed in a digital storage device and selectively operating the system in one of a mirror mode or display mode, wherein during mirror mode displaying on the monitor transformed images of what the camera sees at that particular moment while during display mode displaying on the monitor a transformed images of what the camera saw in the past and obtained from the digital storage device (para [0029]).

Claims 18 and 20 meet the criteria set forth under PCT Article 33(2)-(3) because the prior art fails to teach or fairly suggest the particular combination of elements recited in dependent claims 18 and 20.

The prior art is exemplified by Deguchi, Segawa, Vilcovsky, and Jacob.

Claim 18; Deguchi in view of Segawa and Vilcovsky discloses the method of Claim 17, but does not specifically disclose determining distance to a user appearing in the live video feed; or varying the rate at which the non-ordered steps are performed on the series of images according to the distance. Jacob discloses determining a distance to a user appearing in the live video feed (para [0015]). However, the prior art does not teach or fairly suggest varying a rate at which the non-ordered steps are performed on the series of images according to the distance.

Claim 20; Deguchi in view of Segawa discloses the method of Claim 1. However, the prior art does not teach or fairly suggest calculating distance to a user appearing in the image by identifying user's shoes and triangulating to the shoes.

Claims 1-20 have industrial applicability as defined by PCT Article 33(4) because the subject matter can be made or used in industry.

WRITTEN OPINION OF THE
INTERNATIONAL SEARCHING AUTHORITY

International application No.
PCT/US 13/76253

Supplemental Box

In case **the space in any of the preceding boxes is not sufficient.**
Continuation of:
Box V. 2. Citations and explanations:

Claims 18 and 20 meet the criteria set forth under PCT Article 33(2)-(3) because the prior art fails to disclose or suggest the particular combination of elements recited in independent claims 18 and 20.

The prior art is exemplified by Deguchi, Vilcovsky, and Jacob.

Claim 18; Deguchi in view of Vilcovsky discloses the method of Claim 17, but does not specifically disclose determining distance to a user appearing in the live video feed; or varying the rate at which the non-ordered steps are performed on the series of images according to the distance. Jacob discloses determining a distance to a user appearing in the live video feed (para [0015]). However, the prior art does not teach or disclose varying a rate at which the non-ordered steps are performed on the series of images according to the distance.

Claim 20; Deguchi discloses the method of Claim 1. However, the prior art does not teach or suggest calculating distance to a user appearing in the image by identifying user's shoes and triangulating to the shoes.

Claims 1-20 have industrial applicability as defined by PCT Article 33(4) because the subject matter can be made or used in industry.

JB

PATENT COOPERATION TREATY

From the INTERNATIONAL SEARCHING AUTHORITY

RECEIVED
Nixon Peabody LLP
AUG 12 2014

To: JOSEPH BACH
NIXON PEABODY LLP
P.O. BOX 60610
PALO ALTO, CA 94306

PCT

INVITATION TO PAY ADDITIONAL FEES
AND, WHERE APPLICABLE, PROTEST FEE

(PCT Article 17(3)(a) and Rules 40.1 and 40.2(e))

Date of mailing *(day/month/year)* 08 AUG 2014	
Applicant's or agent's file reference 067055-002101	**PAYMENT DUE** within **ONE MONTH** from the above date of mailing
International application No. PCT/US2014/034333	International filing date *(day/month/year)* 16 April 2014
Applicant EYESMATCH LTD	

1. This International Searching Authority

   (i) considers that there are 6 *(number of)* inventions claimed in the international application covered by the claims indicated below/on an extra sheet:

   see Extra Sheet(s)

   (ii) therefore considers that **the international application does not comply with the requirement of unity of invention** (Rules 13.1, 13.2 and 13.3) for the reasons indicated below/on an extra sheet:

   see Extra Sheet(s)

   (iii) ☐ has carried out a partial international search (see Annex) ☒ will establish the international search report on those parts of the international application which relate to the invention first mentioned in claims Nos.:

   1-20

   (iv) will establish the international search report on the other parts of the international application only if, and to the extent to which, additional fees are paid.

2. Consequently, the applicant is hereby **invited to pay**, within the time limit indicated above, additional fees in the amount indicated below:

   $2,080 (Fee per additional invention) x 5 (number of additional inventions) = $10,400 (total amount of additional fees/currency) (See Item 2 of annex)

3. The applicant is informed that, according to Rule 40.2(c), **the payment of any additional fees may be made under protest**, that is, a reasoned statement to the effect that the international application complies with the requirement of unity of invention or that the amount of the required additional fees is excessive, where applicable, subject to the payment of a protest fee.

   Where the applicant pays additional fees under protest, the applicant is hereby invited, within the time limit indicated above, to pay a protest fee (Rule 40.2(e)) in the amount of _____ *(amount/currency)*

   Where the applicant has not, within the time limit indicated above, paid the required protest fee, the protest will be considered not to have been made and the International Searching Authority will so declare.

4. ☐ Claim(s) Nos. _____ have been found to be unsearchable under Article 17(2)(b) because of defects under Article 17(2)(a) and therefore have not been included with any invention.

Name and mailing address of the ISA/US Mail Stop PCT, Attn: ISA/US Commissioner for Patents P.O. Box 1450, Alexandria, Virginia 22313-1450 Facsimile No. 571-273-3201	Authorized officer: Blaine Copenheaver PCT Helpdesk: 571-272-4300

Form PCT/ISA/206 (April 2005)

INVITATION TO PAY ADDITIONAL FEES
AND, WHERE APPLICABLE, PROTEST FEE

International application No.
PCT/US2014/034333

Item 2 (continued). For International Applications filed on or after 01 January 2014, Applicant is reminded that the search fee per additional invention indicated in item 2 is the undiscounted fee per additional invention. An Applicant may pay the search fee per additional invention fee reduced by 50% (small entity assertion) or 75% (micro entity certification), as appropriate. See 37 CFR 1.27 and 1.29.

This application contains the following inventions or groups of inventions which are not so linked as to form a single general inventive concept under PCT Rule 13.1. In order for all inventions to be examined, the appropriate additional examination fees must be paid.

Group I, claims 1-20, drawn to a computer implemented method for operating a system comprising determining whether the user has an existing account.
Group II, claims 21-31, drawn to a computer readable storage medium storing a program for separating an object in a digital image.
Group III, claims 32-47, drawn to a computer system for perform color change on an object within a digital image.
Group IV, claims 48-56, drawn to a method for operating a mirror-display system where the processor flips the captured images about a vertical axis.
Group V, claims 57-74, drawn to a method for displaying a mirror-mimicking image on the monitor comprising initiating a mirror-mimicking mode and authentication process.
Group VI, claims 75-94, drawn to a method for operating a mirror-display system comprising operating in a mirror tracking mode by operating the processor to apply adaptive transformation mapping to images.

The inventions listed as Groups I-VI do not relate to a single general inventive concept under PCT Rule 13.1 because, under PCT Rule 13.2, they lack the same or corresponding special technical features for the following reasons: the special technical feature of the Group I invention: determining whether the user has an existing account and, if so, opening the user account and displaying thumbnails corresponding to the user account on the monitor; if the user has no existing account, setting a temporary account and so long as the user is still in front of the monitor, enabling the user to control the temporary account as claimed therein is not present in the invention of Groups II-VI. The special technical feature of the Group II invention: instructions for separating an object in a digital image by performing the steps comprising: obtaining a digital image; receiving a selection of an object within the digital image as claimed therein is not present in the invention of Groups I, III-VI. The special technical feature of the Group III invention: perform color change on an object within a digital image, comprising receiving a selection of object in the digital image to be recolored; performing element selection to obtain collection of pixels that belong to the selected object as claimed therein is not present in the invention of Groups I, II, IV-VI. The special technical feature of the Group IV invention: the processor flips the captured images about a vertical axis so as to reverse right and left sides of the captured images and applies transformation mapping to the captured images to generate modified images that appear to mimic reflection of a mirror as claimed therein is not present in the invention of Groups I, II, III or V-VI. The special technical feature of the Group V invention: initiating a mirror-mimicking mode for displaying the mirror-mimicking image on the monitor; initiating an authentication process as claimed therein is not present in the invention of Groups I-IV, VI. The special technical feature of the Group VI invention: operating the mirror-display system in a mirror tracking mode by operating the processor to apply adaptive transformation mapping to images captured by the camera to generate modified images that appear to be captured from a different point of view of the camera's actual point of view as claimed therein is not present in the invention of Groups I-V.

Groups I, II, III, IV, V and VI lack unity of invention because even though the inventions of these groups require the technical feature of a method for operating a mirror-display system having a monitor camera and processor, operating the system in idle mode until a user presence is sensed in front of camera, once user presence identified, switching operation of mirror display into a different mode, this technical feature is not a special technical feature as it does not make a contribution over the prior art. Specifically, US 2008/0151092 A1 (VILCOVSKY) 26 June 2008 (26.06.2008) teaches a method for operating a mirror-display system having a monitor camera and processor (method for enabling a system to carry out an appearance comparison, wherein the system comprises a mirror display device, an imaging device to capture one or more appearances from a field of view in front of the mirror-display device, and central processor, Paras. 6 and 44), operating the system in idle mode until a user presence is sensed in front of camera, once user presence identified, switching operation of mirror display into a different mode (controller 121 receives input from imaging device 130 related to capturing a first trial of the user-appearance in front of imaging device 130, Para. 61 and Fig. 3A; at this point, controller 121 may view the first trial and then change the operational mode of mirror-display device 140 to the display mode using signals 141, wherein controller 121 further facilitates switching the mirror-display device from inactive to active mode, Paras. 31 and 62 and Fig. 3B).

Since none of the special technical features of the Group I, II, III, IV, V or VI inventions are found in more than one of the inventions, unity of invention is lacking.

Electronic Acknowledgement Receipt

EFS ID:	20631857
Application Number:	13843001
International Application Number:	
Confirmation Number:	2550
Title of Invention:	DEVICES, SYSTEMS AND METHODS OF CAPTURING AND DISPLAYING APPEARANCES
First Named Inventor/Applicant Name:	Nissi Vilcovsky
Customer Number:	46188
Filer:	Joseph Bach/Monica Moreno
Filer Authorized By:	Joseph Bach
Attorney Docket Number:	067055-002000
Receipt Date:	06-NOV-2014
Filing Date:	15-MAR-2013
Time Stamp:	19:49:54
Application Type:	Utility under 35 USC 111(a)

Payment information:

Submitted with Payment	no

File Listing:

Document Number	Document Description	File Name	File Size(Bytes)/ Message Digest	Multi Part /.zip	Pages (if appl.)
1	Information Disclosure Statement (IDS) Form (SB08)	067055_002000_IDS.pdf	613423 3cf10f82459dfa54ba33c5f61cd1ad80cc38bb23	no	6

Warnings:

Information:

2	Foreign Reference	EP1859432A2.pdf	218514 eb47dbe01d90c059daa30bbdab8c4f5ae0d266ea	no	3
Warnings:					
Information:					
3	Foreign Reference	WO2006092793A2.pdf	1314180 2e3df5a0eed380dc686b76f12720f809c272fb47	no	25
Warnings:					
Information:					
4	Foreign Reference	WO2014100250A2.pdf	3123865 a5a5455faa9b3925088a122ef1c3042e52f6f530	no	66
Warnings:					
Information:					
5	Non Patent Literature	Decision_to_Refuse_EP06711263_dated_NOV_4_2014.pdf	280990 03cf56f094b67c9c1b98caf81f9c30f2e7a1583f	no	8
Warnings:					
Information:					
6	Non Patent Literature	ISR_PCTUS2013076253_dated_MAY_6_2014.pdf	593211 d2b9286817eabc044061e2d42a2bda5ff30c8f62	no	10
Warnings:					
Information:					
7	Non Patent Literature	NOA_14253800_dated_OCT_24_2014.pdf	444884 8b31a2c43238e6485ff70d973597c98abceb6040	no	9
Warnings:					
Information:					
8	Non Patent Literature	Invit_to_Pay_PCTUS2014034333_dated_AUG_8_2014.pdf	83181 fd9e4ce56bf24e9bb1e2dc9c03a14ea0a6ceed6e	no	2
Warnings:					
Information:					
			Total Files Size (in bytes):	6672248	

This Acknowledgement Receipt evidences receipt on the noted date by the USPTO of the indicated documents, characterized by the applicant, and including page counts, where applicable. It serves as evidence of receipt similar to a Post Card, as described in MPEP 503.

New Applications Under 35 U.S.C. 111
If a new application is being filed and the application includes the necessary components for a filing date (see 37 CFR 1.53(b)-(d) and MPEP 506), a Filing Receipt (37 CFR 1.54) will be issued in due course and the date shown on this Acknowledgement Receipt will establish the filing date of the application.

National Stage of an International Application under 35 U.S.C. 371
If a timely submission to enter the national stage of an international application is compliant with the conditions of 35 U.S.C. 371 and other applicable requirements a Form PCT/DO/EO/903 indicating acceptance of the application as a national stage submission under 35 U.S.C. 371 will be issued in addition to the Filing Receipt, in due course.

New International Application Filed with the USPTO as a Receiving Office
If a new international application is being filed and the international application includes the necessary components for an international filing date (see PCT Article 11 and MPEP 1810), a Notification of the International Application Number and of the International Filing Date (Form PCT/RO/105) will be issued in due course, subject to prescriptions concerning national security, and the date shown on this Acknowledgement Receipt will establish the international filing date of the application.

PTO/SB/08a (01-10)
Approved for use through 07/31/2012. OMB 0651-0031
U.S. Patent and Trademark Office; U.S. DEPARTMENT OF COMMERCE

Under the Paperwork Reduction Act of 1995, no persons are required to respond to a collection of information unless it contains a valid OMB control number.

INFORMATION DISCLOSURE STATEMENT BY APPLICANT

(Not for submission under 37 CFR 1.99)

Application Number	13843001
Filing Date	2013-03-15
First Named Inventor	Nissi Vilcovsky
Art Unit	2697
Examiner Name	SHANKAR, VIJAY
Attorney Docket Number	067055-002000

U.S.PATENTS Remove

Examiner Initial*	Cite No	Patent Number	Kind Code[1]	Issue Date	Name of Patentee or Applicant of cited Document	Pages,Columns,Lines where Relevant Passages or Relevant Figures Appear
	1	5551021	A	1996-08-27	Harada et al.	

If you wish to add additional U.S. Patent citation information please click the Add button. Add

U.S.PATENT APPLICATION PUBLICATIONS Remove

Examiner Initial*	Cite No	Publication Number	Kind Code[1]	Publication Date	Name of Patentee or Applicant of cited Document	Pages,Columns,Lines where Relevant Passages or Relevant Figures Appear
	1					

If you wish to add additional U.S. Published Application citation information please click the Add button. Add

FOREIGN PATENT DOCUMENTS Remove

Examiner Initial*	Cite No	Foreign Document Number[3]	Country Code[2] ¡	Kind Code[4]	Publication Date	Name of Patentee or Applicant of cited Document	Pages,Columns,Lines where Relevant Passages or Relevant Figures Appear	T[5]
	1							☐

If you wish to add additional Foreign Patent Document citation information please click the Add button Add

NON-PATENT LITERATURE DOCUMENTS Remove

Examiner Initials*	Cite No	Include name of the author (in CAPITAL LETTERS), title of the article (when appropriate), title of the item (book, magazine, journal, serial, symposium, catalog, etc), date, pages(s), volume-issue number(s), publisher, city and/or country where published.	T[5]

INFORMATION DISCLOSURE STATEMENT BY APPLICANT (Not for submission under 37 CFR 1.99)	Application Number	13843001
	Filing Date	2013-03-15
	First Named Inventor	Nissi Vilcovsky
	Art Unit	2697
	Examiner Name	SHANKAR, VIJAY
	Attorney Docket Number	067055-002000

	1		☐

If you wish to add additional non-patent literature document citation information please click the Add button Add

EXAMINER SIGNATURE

Examiner Signature		Date Considered	

*EXAMINER: Initial if reference considered, whether or not citation is in conformance with MPEP 609. Draw line through a citation if not in conformance and not considered. Include copy of this form with next communication to applicant.

[1] See Kind Codes of USPTO Patent Documents at www.USPTO.GOV or MPEP 901.04. [2] Enter office that issued the document, by the two-letter code (WIPO Standard ST.3). [3] For Japanese patent documents, the indication of the year of the reign of the Emperor must precede the serial number of the patent document. [4] Kind of document by the appropriate symbols as indicated on the document under WIPO Standard ST.16 if possible. [5] Applicant is to place a check mark here if English language translation is attached.

INFORMATION DISCLOSURE STATEMENT BY APPLICANT (Not for submission under 37 CFR 1.99)	Application Number	13843001
	Filing Date	2013-03-15
	First Named Inventor	Nissi Vilcovsky
	Art Unit	2697
	Examiner Name	SHANKAR, VIJAY
	Attorney Docket Number	067055-002000

CERTIFICATION STATEMENT

Please see 37 CFR 1.97 and 1.98 to make the appropriate selection(s):

☐ That each item of information contained in the information disclosure statement was first cited in any communication from a foreign patent office in a counterpart foreign application not more than three months prior to the filing of the information disclosure statement. See 37 CFR 1.97(e)(1).

OR

☐ That no item of information contained in the information disclosure statement was cited in a communication from a foreign patent office in a counterpart foreign application, and, to the knowledge of the person signing the certification after making reasonable inquiry, no item of information contained in the information disclosure statement was known to any individual designated in 37 CFR 1.56(c) more than three months prior to the filing of the information disclosure statement. See 37 CFR 1.97(e)(2).

☐ See attached certification statement.

☐ The fee set forth in 37 CFR 1.17 (p) has been submitted herewith.

☒ A certification statement is not submitted herewith.

SIGNATURE

A signature of the applicant or representative is required in accordance with CFR 1.33, 10.18. Please see CFR 1.4(d) for the form of the signature.

Signature	/Joseph Bach/	Date (YYYY-MM-DD)	2014-11-20
Name/Print	Joseph Bach	Registration Number	37,771

This collection of information is required by 37 CFR 1.97 and 1.98. The information is required to obtain or retain a benefit by the public which is to file (and by the USPTO to process) an application. Confidentiality is governed by 35 U.S.C. 122 and 37 CFR 1.14. This collection is estimated to take 1 hour to complete, including gathering, preparing and submitting the completed application form to the USPTO. Time will vary depending upon the individual case. Any comments on the amount of time you require to complete this form and/or suggestions for reducing this burden, should be sent to the Chief Information Officer, U.S. Patent and Trademark Office, U.S. Department of Commerce, P.O. Box 1450, Alexandria, VA 22313-1450. DO NOT SEND FEES OR COMPLETED FORMS TO THIS ADDRESS. **SEND TO: Commissioner for Patents, P.O. Box 1450, Alexandria, VA 22313-1450.**

Privacy Act Statement

The Privacy Act of 1974 (P.L. 93-579) requires that you be given certain information in connection with your submission of the attached form related to a patent application or patent. Accordingly, pursuant to the requirements of the Act, please be advised that: (1) the general authority for the collection of this information is 35 U.S.C. 2(b)(2); (2) furnishing of the information solicited is voluntary; and (3) the principal purpose for which the information is used by the U.S. Patent and Trademark Office is to process and/or examine your submission related to a patent application or patent. If you do not furnish the requested information, the U.S. Patent and Trademark Office may not be able to process and/or examine your submission, which may result in termination of proceedings or abandonment of the application or expiration of the patent.

The information provided by you in this form will be subject to the following routine uses:

1. The information on this form will be treated confidentially to the extent allowed under the Freedom of Information Act (5 U.S.C. 552) and the Privacy Act (5 U.S.C. 552a). Records from this system of records may be disclosed to the Department of Justice to determine whether the Freedom of Information Act requires disclosure of these record s.

2. A record from this system of records may be disclosed, as a routine use, in the course of presenting evidence to a court, magistrate, or administrative tribunal, including disclosures to opposing counsel in the course of settlement negotiations.

3. A record in this system of records may be disclosed, as a routine use, to a Member of Congress submitting a request involving an individual, to whom the record pertains, when the individual has requested assistance from the Member with respect to the subject matter of the record.

4. A record in this system of records may be disclosed, as a routine use, to a contractor of the Agency having need for the information in order to perform a contract. Recipients of information shall be required to comply with the requirements of the Privacy Act of 1974, as amended, pursuant to 5 U.S.C. 552a(m).

5. A record related to an International Application filed under the Patent Cooperation Treaty in this system of records may be disclosed, as a routine use, to the International Bureau of the World Intellectual Property Organization, pursuant to the Patent Cooperation Treaty.

6. A record in this system of records may be disclosed, as a routine use, to another federal agency for purposes of National Security review (35 U.S.C. 181) and for review pursuant to the Atomic Energy Act (42 U.S.C. 218(c)).

7. A record from this system of records may be disclosed, as a routine use, to the Administrator, General Services, or his/her designee, during an inspection of records conducted by GSA as part of that agency's responsibility to recommend improvements in records management practices and programs, under authority of 44 U.S.C. 2904 and 2906. Such disclosure shall be made in accordance with the GSA regulations governing inspection of records for this purpose, and any other relevant (i.e., GSA or Commerce) directive. Such disclosure shall not be used to make determinations about individuals.

8. A record from this system of records may be disclosed, as a routine use, to the public after either publication of the application pursuant to 35 U.S.C. 122(b) or issuance of a patent pursuant to 35 U.S.C. 151. Further, a record may be disclosed, subject to the limitations of 37 CFR 1.14, as a routine use, to the public if the record was filed in an application which became abandoned or in which the proceedings were terminated and which application is referenced by either a published application, an application open to public inspections or an issued patent.

9. A record from this system of records may be disclosed, as a routine use, to a Federal, State, or local law enforcement agency, if the USPTO becomes aware of a violation or potential violation of law or regulation.

Electronic Acknowledgement Receipt

EFS ID:	20758668
Application Number:	13843001
International Application Number:	
Confirmation Number:	2550
Title of Invention:	DEVICES, SYSTEMS AND METHODS OF CAPTURING AND DISPLAYING APPEARANCES
First Named Inventor/Applicant Name:	Nissi Vilcovsky
Customer Number:	46188
Filer:	Joseph Bach/Tiffany Weeks
Filer Authorized By:	Joseph Bach
Attorney Docket Number:	067055-002000
Receipt Date:	20-NOV-2014
Filing Date:	15-MAR-2013
Time Stamp:	17:28:31
Application Type:	Utility under 35 USC 111(a)

Payment information:

Submitted with Payment	no

File Listing:

Document Number	Document Description	File Name	File Size(Bytes)/ Message Digest	Multi Part /.zip	Pages (if appl.)
1	Information Disclosure Statement (IDS) Form (SB08)	067055_002000_IDS_dated_11-20-2014.pdf	612162 6c97504bb13b38ccfc2b2105825579187b7a4f5f	no	4

Warnings:

Information:

Total Files Size (in bytes):	612162

This Acknowledgement Receipt evidences receipt on the noted date by the USPTO of the indicated documents, characterized by the applicant, and including page counts, where applicable. It serves as evidence of receipt similar to a Post Card, as described in MPEP 503.

New Applications Under 35 U.S.C. 111
If a new application is being filed and the application includes the necessary components for a filing date (see 37 CFR 1.53(b)-(d) and MPEP 506), a Filing Receipt (37 CFR 1.54) will be issued in due course and the date shown on this Acknowledgement Receipt will establish the filing date of the application.

National Stage of an International Application under 35 U.S.C. 371
If a timely submission to enter the national stage of an international application is compliant with the conditions of 35 U.S.C. 371 and other applicable requirements a Form PCT/DO/EO/903 indicating acceptance of the application as a national stage submission under 35 U.S.C. 371 will be issued in addition to the Filing Receipt, in due course.

New International Application Filed with the USPTO as a Receiving Office
If a new international application is being filed and the international application includes the necessary components for an international filing date (see PCT Article 11 and MPEP 1810), a Notification of the International Application Number and of the International Filing Date (Form PCT/RO/105) will be issued in due course, subject to prescriptions concerning national security, and the date shown on this Acknowledgement Receipt will establish the international filing date of the application.

UNITED STATES PATENT AND TRADEMARK OFFICE

UNITED STATES DEPARTMENT OF COMMERCE
United States Patent and Trademark Office
Address: COMMISSIONER FOR PATENTS
P.O. Box 1450
Alexandria, Virginia 22313-1450
www.uspto.gov

NOTICE OF ALLOWANCE AND FEE(S) DUE

46188 7590 12/05/2014
Nixon Peabody LLP
P.O. Box 60610
Palo Alto, CA 94306

EXAMINER
SHANKAR, VIJAY

ART UNIT	PAPER NUMBER
2697	

DATE MAILED: 12/05/2014

APPLICATION NO.	FILING DATE	FIRST NAMED INVENTOR	ATTORNEY DOCKET NO.	CONFIRMATION NO.
13/843,001	03/15/2013	Nissi Vilcovsky	067055-002000	2550

TITLE OF INVENTION: DEVICES, SYSTEMS AND METHODS OF CAPTURING AND DISPLAYING APPEARANCES

APPLN. TYPE	ENTITY STATUS	ISSUE FEE DUE	PUBLICATION FEE DUE	PREV. PAID ISSUE FEE	TOTAL FEE(S) DUE	DATE DUE
nonprovisional	SMALL	$480	$0	$0	$480	03/05/2015

THE APPLICATION IDENTIFIED ABOVE HAS BEEN EXAMINED AND IS ALLOWED FOR ISSUANCE AS A PATENT. PROSECUTION ON THE MERITS IS CLOSED. THIS NOTICE OF ALLOWANCE IS NOT A GRANT OF PATENT RIGHTS. THIS APPLICATION IS SUBJECT TO WITHDRAWAL FROM ISSUE AT THE INITIATIVE OF THE OFFICE OR UPON PETITION BY THE APPLICANT. SEE 37 CFR 1.313 AND MPEP 1308.

THE ISSUE FEE AND PUBLICATION FEE (IF REQUIRED) MUST BE PAID WITHIN THREE MONTHS FROM THE MAILING DATE OF THIS NOTICE OR THIS APPLICATION SHALL BE REGARDED AS ABANDONED. THIS STATUTORY PERIOD CANNOT BE EXTENDED. SEE 35 U.S.C. 151. THE ISSUE FEE DUE INDICATED ABOVE DOES NOT REFLECT A CREDIT FOR ANY PREVIOUSLY PAID ISSUE FEE IN THIS APPLICATION. IF AN ISSUE FEE HAS PREVIOUSLY BEEN PAID IN THIS APPLICATION (AS SHOWN ABOVE), THE RETURN OF PART B OF THIS FORM WILL BE CONSIDERED A REQUEST TO REAPPLY THE PREVIOUSLY PAID ISSUE FEE TOWARD THE ISSUE FEE NOW DUE.

HOW TO REPLY TO THIS NOTICE:

I. Review the ENTITY STATUS shown above. If the ENTITY STATUS is shown as SMALL or MICRO, verify whether entitlement to that entity status still applies.

If the ENTITY STATUS is the same as shown above, pay the TOTAL FEE(S) DUE shown above.

If the ENTITY STATUS is changed from that shown above, on PART B - FEE(S) TRANSMITTAL, complete section number 5 titled "Change in Entity Status (from status indicated above)".

For purposes of this notice, small entity fees are 1/2 the amount of undiscounted fees, and micro entity fees are 1/2 the amount of small entity fees.

II. PART B - FEE(S) TRANSMITTAL, or its equivalent, must be completed and returned to the United States Patent and Trademark Office (USPTO) with your ISSUE FEE and PUBLICATION FEE (if required). If you are charging the fee(s) to your deposit account, section "4b" of Part B - Fee(s) Transmittal should be completed and an extra copy of the form should be submitted. If an equivalent of Part B is filed, a request to reapply a previously paid issue fee must be clearly made, and delays in processing may occur due to the difficulty in recognizing the paper as an equivalent of Part B.

III. All communications regarding this application must give the application number. Please direct all communications prior to issuance to Mail Stop ISSUE FEE unless advised to the contrary.

IMPORTANT REMINDER: Utility patents issuing on applications filed on or after Dec. 12, 1980 may require payment of maintenance fees. It is patentee's responsibility to ensure timely payment of maintenance fees when due.

PTOL-85 (Rev. 02/11)

PART B - FEE(S) TRANSMITTAL

Complete and send this form, together with applicable fee(s), to: Mail **Mail Stop ISSUE FEE**
Commissioner for Patents
P.O. Box 1450
Alexandria, Virginia 22313-1450
or Fax (571)-273-2885

INSTRUCTIONS: This form should be used for transmitting the ISSUE FEE and PUBLICATION FEE (if required). Blocks 1 through 5 should be completed where appropriate. All further correspondence including the Patent, advance orders and notification of maintenance fees will be mailed to the current correspondence address as indicated unless corrected below or directed otherwise in Block 1, by (a) specifying a new correspondence address; and/or (b) indicating a separate "FEE ADDRESS" for maintenance fee notifications.

CURRENT CORRESPONDENCE ADDRESS (Note: Use Block 1 for any change of address)

46188 7590 12/05/2014
Nixon Peabody LLP
P.O. Box 60610
Palo Alto, CA 94306

Note: A certificate of mailing can only be used for domestic mailings of the Fee(s) Transmittal. This certificate cannot be used for any other accompanying papers. Each additional paper, such as an assignment or formal drawing, must have its own certificate of mailing or transmission.

Certificate of Mailing or Transmission
I hereby certify that this Fee(s) Transmittal is being deposited with the United States Postal Service with sufficient postage for first class mail in an envelope addressed to the Mail Stop ISSUE FEE address above, or being facsimile transmitted to the USPTO (571) 273-2885, on the date indicated below.

(Depositor's name)
(Signature)
(Date)

APPLICATION NO.	FILING DATE	FIRST NAMED INVENTOR	ATTORNEY DOCKET NO.	CONFIRMATION NO.
13/843,001	03/15/2013	Nissi Vilcovsky	067055-002000	2550

TITLE OF INVENTION: DEVICES, SYSTEMS AND METHODS OF CAPTURING AND DISPLAYING APPEARANCES

APPLN. TYPE	ENTITY STATUS	ISSUE FEE DUE	PUBLICATION FEE DUE	PREV. PAID ISSUE FEE	TOTAL FEE(S) DUE	DATE DUE
nonprovisional	SMALL	$480	$0	$0	$480	03/05/2015

EXAMINER	ART UNIT	CLASS-SUBCLASS
SHANKAR, VIJAY	2697	345-204000

1. Change of correspondence address or indication of "Fee Address" (37 CFR 1.363).
- ❑ Change of correspondence address (or Change of Correspondence Address form PTO/SB/122) attached.
- ❑ "Fee Address" indication (or "Fee Address" Indication form PTO/SB/47; Rev 03-02 or more recent) attached. **Use of a Customer Number is required.**

2. For printing on the patent front page, list
(1) The names of up to 3 registered patent attorneys or agents OR, alternatively,
(2) The name of a single firm (having as a member a registered attorney or agent) and the names of up to 2 registered patent attorneys or agents. If no name is listed, no name will be printed.

1_____
2_____
3_____

3. ASSIGNEE NAME AND RESIDENCE DATA TO BE PRINTED ON THE PATENT (print or type)

PLEASE NOTE: Unless an assignee is identified below, no assignee data will appear on the patent. If an assignee is identified below, the document has been filed for recordation as set forth in 37 CFR 3.11. Completion of this form is NOT a substitute for filing an assignment.

(A) NAME OF ASSIGNEE (B) RESIDENCE: (CITY and STATE OR COUNTRY)

Please check the appropriate assignee category or categories (will not be printed on the patent) : ❑ Individual ❑ Corporation or other private group entity ❑ Government

4a. The following fee(s) are submitted:
- ❑ Issue Fee
- ❑ Publication Fee (No small entity discount permitted)
- ❑ Advance Order - # of Copies _____

4b. Payment of Fee(s): (**Please first reapply any previously paid issue fee shown above**)
- ❑ A check is enclosed.
- ❑ Payment by credit card. Form PTO-2038 is attached.
- ❑ The director is hereby authorized to charge the required fee(s), any deficiency, or credits any overpayment, to Deposit Account Number _____ (enclose an extra copy of this form).

5. **Change in Entity Status** (from status indicated above)
- ❑ Applicant certifying micro entity status. See 37 CFR 1.29 — NOTE: Absent a valid certification of Micro Entity Status (see forms PTO/SB/15A and 15B), issue fee payment in the micro entity amount will not be accepted at the risk of application abandonment.
- ❑ Applicant asserting small entity status. See 37 CFR 1.27 — NOTE: If the application was previously under micro entity status, checking this box will be taken to be a notification of loss of entitlement to micro entity status.
- ❑ Applicant changing to regular undiscounted fee status. — NOTE: Checking this box will be taken to be a notification of loss of entitlement to small or micro entity status, as applicable.

NOTE: This form must be signed in accordance with 37 CFR 1.31 and 1.33. See 37 CFR 1.4 for signature requirements and certifications.

Authorized Signature _____ Date _____

Typed or printed name _____ Registration No. _____

PTOL-85 Part B (10-13) Approved for use through 10/31/2013. OMB 0651-0033 U.S. Patent and Trademark Office; U.S. DEPARTMENT OF COMMERCE

UNITED STATES PATENT AND TRADEMARK OFFICE

UNITED STATES DEPARTMENT OF COMMERCE
United States Patent and Trademark Office
Address: COMMISSIONER FOR PATENTS
P.O. Box 1450
Alexandria, Virginia 22313-1450
www.uspto.gov

APPLICATION NO.	FILING DATE	FIRST NAMED INVENTOR	ATTORNEY DOCKET NO.	CONFIRMATION NO.
13/843,001	03/15/2013	Nissi Vilcovsky	067055-002000	2550

46188 7590 12/05/2014
Nixon Peabody LLP
P.O. Box 60610
Palo Alto, CA 94306

EXAMINER
SHANKAR, VIJAY

ART UNIT	PAPER NUMBER
2697	

DATE MAILED: 12/05/2014

Determination of Patent Term Adjustment under 35 U.S.C. 154 (b)
(Applications filed on or after May 29, 2000)

The Office has discontinued providing a Patent Term Adjustment (PTA) calculation with the Notice of Allowance.

Section 1(h)(2) of the AIA Technical Corrections Act amended 35 U.S.C. 154(b)(3)(B)(i) to eliminate the requirement that the Office provide a patent term adjustment determination with the notice of allowance. See Revisions to Patent Term Adjustment, 78 Fed. Reg. 19416, 19417 (Apr. 1, 2013). Therefore, the Office is no longer providing an initial patent term adjustment determination with the notice of allowance. The Office will continue to provide a patent term adjustment determination with the Issue Notification Letter that is mailed to applicant approximately three weeks prior to the issue date of the patent, and will include the patent term adjustment on the patent. Any request for reconsideration of the patent term adjustment determination (or reinstatement of patent term adjustment) should follow the process outlined in 37 CFR 1.705.

Any questions regarding the Patent Term Extension or Adjustment determination should be directed to the Office of Patent Legal Administration at (571)-272-7702. Questions relating to issue and publication fee payments should be directed to the Customer Service Center of the Office of Patent Publication at 1-(888)-786-0101 or (571)-272-4200.

OMB Clearance and PRA Burden Statement for PTOL-85 Part B

The Paperwork Reduction Act (PRA) of 1995 requires Federal agencies to obtain Office of Management and Budget approval before requesting most types of information from the public. When OMB approves an agency request to collect information from the public, OMB (i) provides a valid OMB Control Number and expiration date for the agency to display on the instrument that will be used to collect the information and (ii) requires the agency to inform the public about the OMB Control Number's legal significance in accordance with 5 CFR 1320.5(b).

The information collected by PTOL-85 Part B is required by 37 CFR 1.311. The information is required to obtain or retain a benefit by the public which is to file (and by the USPTO to process) an application. Confidentiality is governed by 35 U.S.C. 122 and 37 CFR 1.14. This collection is estimated to take 12 minutes to complete, including gathering, preparing, and submitting the completed application form to the USPTO. Time will vary depending upon the individual case. Any comments on the amount of time you require to complete this form and/or suggestions for reducing this burden, should be sent to the Chief Information Officer, U.S. Patent and Trademark Office, U.S. Department of Commerce, P.O. Box 1450, Alexandria, Virginia 22313-1450. DO NOT SEND FEES OR COMPLETED FORMS TO THIS ADDRESS. SEND TO: Commissioner for Patents, P.O. Box 1450, Alexandria, Virginia 22313-1450. Under the Paperwork Reduction Act of 1995, no persons are required to respond to a collection of information unless it displays a valid OMB control number.

Privacy Act Statement

The Privacy Act of 1974 (P.L. 93-579) requires that you be given certain information in connection with your submission of the attached form related to a patent application or patent. Accordingly, pursuant to the requirements of the Act, please be advised that: (1) the general authority for the collection of this information is 35 U.S.C. 2(b)(2); (2) furnishing of the information solicited is voluntary; and (3) the principal purpose for which the information is used by the U.S. Patent and Trademark Office is to process and/or examine your submission related to a patent application or patent. If you do not furnish the requested information, the U.S. Patent and Trademark Office may not be able to process and/or examine your submission, which may result in termination of proceedings or abandonment of the application or expiration of the patent.

The information provided by you in this form will be subject to the following routine uses:

1. The information on this form will be treated confidentially to the extent allowed under the Freedom of Information Act (5 U.S.C. 552) and the Privacy Act (5 U.S.C 552a). Records from this system of records may be disclosed to the Department of Justice to determine whether disclosure of these records is required by the Freedom of Information Act.
2. A record from this system of records may be disclosed, as a routine use, in the course of presenting evidence to a court, magistrate, or administrative tribunal, including disclosures to opposing counsel in the course of settlement negotiations.
3. A record in this system of records may be disclosed, as a routine use, to a Member of Congress submitting a request involving an individual, to whom the record pertains, when the individual has requested assistance from the Member with respect to the subject matter of the record.
4. A record in this system of records may be disclosed, as a routine use, to a contractor of the Agency having need for the information in order to perform a contract. Recipients of information shall be required to comply with the requirements of the Privacy Act of 1974, as amended, pursuant to 5 U.S.C. 552a(m).
5. A record related to an International Application filed under the Patent Cooperation Treaty in this system of records may be disclosed, as a routine use, to the International Bureau of the World Intellectual Property Organization, pursuant to the Patent Cooperation Treaty.
6. A record in this system of records may be disclosed, as a routine use, to another federal agency for purposes of National Security review (35 U.S.C. 181) and for review pursuant to the Atomic Energy Act (42 U.S.C. 218(c)).
7. A record from this system of records may be disclosed, as a routine use, to the Administrator, General Services, or his/her designee, during an inspection of records conducted by GSA as part of that agency's responsibility to recommend improvements in records management practices and programs, under authority of 44 U.S.C. 2904 and 2906. Such disclosure shall be made in accordance with the GSA regulations governing inspection of records for this purpose, and any other relevant (i.e., GSA or Commerce) directive. Such disclosure shall not be used to make determinations about individuals.
8. A record from this system of records may be disclosed, as a routine use, to the public after either publication of the application pursuant to 35 U.S.C. 122(b) or issuance of a patent pursuant to 35 U.S.C. 151. Further, a record may be disclosed, subject to the limitations of 37 CFR 1.14, as a routine use, to the public if the record was filed in an application which became abandoned or in which the proceedings were terminated and which application is referenced by either a published application, an application open to public inspection or an issued patent.
9. A record from this system of records may be disclosed, as a routine use, to a Federal, State, or local law enforcement agency, if the USPTO becomes aware of a violation or potential violation of law or regulation.

Notice of Allowability	Application No. 13/843,001	Applicant(s) VILCOVSKY ET AL.	
	Examiner VIJAY SHANKAR	Art Unit 2697	AIA (First Inventor to File) Status No

-- The MAILING DATE of this communication appears on the cover sheet with the correspondence address--

All claims being allowable, PROSECUTION ON THE MERITS IS (OR REMAINS) CLOSED in this application. If not included herewith (or previously mailed), a Notice of Allowance (PTOL-85) or other appropriate communication will be mailed in due course. **THIS NOTICE OF ALLOWABILITY IS NOT A GRANT OF PATENT RIGHTS.** This application is subject to withdrawal from issue at the initiative of the Office or upon petition by the applicant. See 37 CFR 1.313 and MPEP 1308.

1. ☒ This communication is responsive to *Examiner's Amendment on 11/21/14*.
   ☐ A declaration(s)/affidavit(s) under **37 CFR 1.130(b)** was/were filed on_____.

2. ☐ An election was made by the applicant in response to a restriction requirement set forth during the interview on _____; the restriction requirement and election have been incorporated into this action.

3. ☒ The allowed claim(s) is/are *1-16, 19-20*. As a result of the allowed claim(s), you may be eligible to benefit from the **Patent Prosecution Highway** program at a participating intellectual property office for the corresponding application. For more information, please see http://www.uspto.gov/patents/init_events/pph/index.jsp or send an inquiry to PPHfeedback@uspto.gov.

4. ☐ Acknowledgment is made of a claim for foreign priority under 35 U.S.C. § 119(a)-(d) or (f).

   Certified copies:

   a) ☐ All b) ☐ Some *c) ☐ None of the:

   1. ☐ Certified copies of the priority documents have been received.
   2. ☐ Certified copies of the priority documents have been received in Application No. _____ .
   3. ☐ Copies of the certified copies of the priority documents have been received in this national stage application from the International Bureau (PCT Rule 17.2(a)).

   * Certified copies not received: _____.

Applicant has THREE MONTHS FROM THE "MAILING DATE" of this communication to file a reply complying with the requirements noted below. Failure to timely comply will result in ABANDONMENT of this application.
THIS THREE-MONTH PERIOD IS NOT EXTENDABLE.

5. ☐ CORRECTED DRAWINGS (as "replacement sheets") must be submitted.

   ☐ including changes required by the attached Examiner's Amendment / Comment or in the Office action of Paper No./Mail Date _____.

   Identifying indicia such as the application number (see 37 CFR 1.84(c)) should be written on the drawings in the front (not the back) of each sheet. Replacement sheet(s) should be labeled as such in the header according to 37 CFR 1.121(d).

6. ☐ DEPOSIT OF and/or INFORMATION about the deposit of BIOLOGICAL MATERIAL must be submitted. Note the attached Examiner's comment regarding REQUIREMENT FOR THE DEPOSIT OF BIOLOGICAL MATERIAL.

Attachment(s)

1. ☒ Notice of References Cited (PTO-892)
2. ☒ Information Disclosure Statements (PTO/SB/08), Paper No./Mail Date _____
3. ☐ Examiner's Comment Regarding Requirement for Deposit of Biological Material
4. ☐ Interview Summary (PTO-413), Paper No./Mail Date _____ .
5. ☒ Examiner's Amendment/Comment
6. ☒ Examiner's Statement of Reasons for Allowance
7. ☐ Other _____.

/VIJAY SHANKAR/
Primary Examiner, Art Unit 2697

1. The present application is being examined under the pre-AIA first to invent provisions.

EXAMINER'S AMENDMENT

2. An examiner's amendment to the record appears below. Should the changes and/or additions be unacceptable to applicant, an amendment may be filed as provided by 37 CFR 1.312. To ensure consideration of such an amendment, it MUST be submitted no later than the payment of the issue fee.

Authorization for this examiner's amendment was given in a telephone interview with Joseph Bach on 11/21/14.

The application has been amended as follows:

1) Amend Claims 1 and 19.

2) Cancel Claims 17, 18.

Claim 1 (Currently Amended). A method for operating a system having a monitor, a camera, and a processor, so as to display a mirror-mimicking image on the monitor, by performing ~~the~~ non-ordered steps comprising: obtaining a digital image from a camera; flipping the image about a vertical axis so as to reverse right and left sides of the image; applying a transformation mapping to the image to modify the image such that it appears to mimic a reflection of a mirror; resizing the image to reduce variations caused by changes in object's distance to the camera; displaying the image on the monitor after performing the flipping, transformation mapping, and resizing<u>; wherein the non-ordered steps are performed on a series of images of a live video feed from the</u>

camera; determining distance to a user appearing in the live video feed; and, varying rate at which the non-ordered steps are performed on the series of images according to the distance.

Claim 19 (Currently Amended). The method of claim [[17]] 1, storing the live video feed in a digital storage device and selectively operating the system in one of a mirror mode or display mode, wherein during mirror mode displaying on the monitor transformed images of what the camera sees at that particular moment while during display mode displaying on the monitor a transformed images of what the camera saw in the past and obtained from the digital storage device.

DETAILED ACTION

Allowable Subject Matter

3. Claims 1-16 and 19-20 are allowed.

4. The following is an examiner's statement of reasons for allowance: The prior arts fail to teach a method for operating a system having a monitor, a camera, and a processor, so as to display a mirror-mimicking image on the monitor, **by performing non-ordered steps comprising: obtaining a digital image from a camera; flipping the image about a vertical axis so as to reverse right and left sides of the image; applying a transformation mapping to the image to modify the image such that it appears to mimic a reflection of a mirror; resizing the image to reduce variations caused by changes in object's distance to the camera; displaying the image on**

the monitor after performing the flipping, transformation mapping, and resizing; wherein the non-ordered steps are performed on a series of images of a live video feed from the camera; determining distance to a user appearing in the live video feed; and, varying rate at which the non-ordered steps are performed on the series of images according to the distance as Claimed in Claim 1.

Any comments considered necessary by applicant must be submitted no later than the payment of the issue fee and, to avoid processing delays, should preferably accompany the issue fee. Such submissions should be clearly labeled "Comments on Statement of Reasons for Allowance."

5. Any inquiry concerning this communication or earlier communications from the examiner should be directed to VIJAY SHANKAR whose telephone number is (571)272-7682. The examiner can normally be reached on M-F 7:30 am - 5:30 pm.

If attempts to reach the examiner by telephone are unsuccessful, the examiner's supervisor, Alexander Eisen can be reached on (571) 272-7687. The fax phone number for the organization where this application or proceeding is assigned is 571-273-8300.

Information regarding the status of an application may be obtained from the Patent Application Information Retrieval (PAIR) system. Status information for published applications may be obtained from either Private PAIR or Public PAIR. Status information for unpublished applications is available through Private PAIR only. For more information about the PAIR system, see http://pair-direct.uspto.gov. Should you have questions on access to the Private PAIR system, contact the Electronic Business Center (EBC) at 866-217-9197 (toll-free). If you would like assistance from a USPTO Customer Service Representative or access to the automated information system, call 800-786-9199 (IN USA OR CANADA) or 571-272-1000.

/VIJAY SHANKAR/
Primary Examiner, Art Unit 2697

Notice of References Cited	Application/Control No. 13/843,001	Applicant(s)/Patent Under Reexamination VILCOVSKY ET AL.	
	Examiner VIJAY SHANKAR	Art Unit 2697	Page 1 of 1

U.S. PATENT DOCUMENTS

*		Document Number Country Code-Number-Kind Code	Date MM-YYYY	Name	Classification
*	A	US-7,500,755	03-2009	Ishizaki et al.	353/28
*	B	US-7,874,681	01-2011	Huebner, Kenneth J.	353/28
	C	US-			
	D	US-			
	E	US-			
	F	US-			
	G	US-			
	H	US-			
	I	US-			
	J	US-			
	K	US-			
	L	US-			
	M	US-			

FOREIGN PATENT DOCUMENTS

*		Document Number Country Code-Number-Kind Code	Date MM-YYYY	Country	Name	Classification
	N					
	O					
	P					
	Q					
	R					
	S					
	T					

NON-PATENT DOCUMENTS

*		Include as applicable: Author, Title Date, Publisher, Edition or Volume, Pertinent Pages)
	U	
	V	
	W	
	X	

*A copy of this reference is not being furnished with this Office action. (See MPEP § 707.05(a).)
Dates in MM-YYYY format are publication dates. Classifications may be US or foreign.

Under the Paperwork Reduction Act of 1995, no persons are required to respond to a collection of information unless it contains a valid OMB control number.

INFORMATION DISCLOSURE STATEMENT BY APPLICANT (**Not for submission under 37 CFR 1.99)**		
	Application Number	13843001
	Filing Date	2013-03-15
	First Named Inventor	Nissi Vilcovsky
	Art Unit	2656
	Examiner Name	KUNTZ, CURTIS A.
	Attorney Docket Number	067055-002000

U.S.PATENTS						Remove
Examiner Initial*	Cite No	Patent Number	Kind Code[1]	Issue Date	Name of Patentee or Applicant of cited Document	Pages,Columns,Lines where Relevant Passages or Relevant Figures Appear
	1	7948481	B2	2011-05-24	Vilcovsky	
If you wish to add additional U.S. Patent citation information please click the Add button.						Add

U.S.PATENT APPLICATION PUBLICATIONS						Remove
Examiner Initial*	Cite No	Publication Number	Kind Code[1]	Publication Date	Name of Patentee or Applicant of cited Document	Pages,Columns,Lines where Relevant Passages or Relevant Figures Appear
	1	20020196333	A1	2002-12-26	Gorischek	
	2	20030085866	A1	2003-05-08	Bimber et al.	
	3	20050018140	A1	2005-01-27	Ishizaki et al.	
	4	20060178902	A1	2006-08-10	Vicars et al.	
	5	20090091710	A1	2009-04-09	Huebner	

EFS Web 2.1.17 ALL REFERENCES CONSIDERED EXCEPT WHERE LINED THROUGH. /V.S./

Receipt date: 12/03/2013	Application Number	13843001	13843001 - GAU: 2697
INFORMATION DISCLOSURE STATEMENT BY APPLICANT (**Not for submission under 37 CFR 1.99)**	Filing Date	2013-03-15	
	First Named Inventor	Nissi Vilcovsky	
	Art Unit	2656	
	Examiner Name	KUNTZ, CURTIS A.	
	Attorney Docket Number	067055-002000	

	6	20110199294	A1	2011-08-18	Vilcovsky	

If you wish to add additional U.S. Published Application citation information please click the Add button. Add

FOREIGN PATENT DOCUMENTS Remove

Examiner Initial*	Cite No	Foreign Document Number[3]	Country Code[2] ¡	Kind Code[4]	Publication Date	Name of Patentee or Applicant of cited Document	Pages,Columns,Lines where Relevant Passages or Relevant Figures Appear	T[5]
	1	10031965	DE	A1	2002-01-10	Floegel		☐
	2	19943355	DE	A1	2001-03-15	Benesch		☐
	3	1372092	EP	A1	2003-12-17	Accenture Global Services GMBH		☐
	4	1376207	EP	A1	2004-01-02	Seiko Epson Corp.		☐
	5	00/22955	WO	A1	2000-04-27	Fischer		☐

If you wish to add additional Foreign Patent Document citation information please click the Add button Add

NON-PATENT LITERATURE DOCUMENTS Remove

Examiner Initials*	Cite No	Include name of the author (in CAPITAL LETTERS), title of the article (when appropriate), title of the item (book, magazine, journal, serial, symposium, catalog, etc), date, pages(s), volume-issue number(s), publisher, city and/or country where published.	T[5]
	1	Search Report for European Patent Application No. 06711263.1 dated August 18, 2011.	☐

EFS Web 2.1.17 ALL REFERENCES CONSIDERED EXCEPT WHERE LINED THROUGH. /V.S./

Receipt date: 12/03/2013	Application Number	13843001 13843001 - GAU: 2697
INFORMATION DISCLOSURE STATEMENT BY APPLICANT (**Not for submission under 37 CFR 1.99)**	Filing Date	2013-03-15
	First Named Inventor	Nissi Vilcovsky
	Art Unit	2656
	Examiner Name	KUNTZ, CURTIS A.
	Attorney Docket Number	067055-002000

	2	Examination Report for European Patent Application No. 06711263.1 dated June 21, 2012.	☐
	3	2nd Examination Report for European Patent Application No. 06711263.1 dated June 25, 2013.	☐
	4	International Search Report and Written Opinion for PCT/IL2006/000281 mailed on June 12, 2007.	☐
	5	International Preliminary Report on Patentability for PCT/IL2006/000281 mailed on September 20, 2007.	☐
	6	Office Action for U.S. Application No. 13/088,369 mailed on November 2, 2012.	☐
	7	Office Action for U.S. Application No. 13/088,369 mailed on April 9, 2013.	☐
	8	Notice of Allowance for U.S. Application No. 13/088,369 mailed on September 3, 2013.	☐
	9	Office Action for U.S. Application No. 11/817,411 mailed on July 21, 2010.	☐
	10	Notice of Allowance for U.S. Application No. 11/817,411 mailed on February 3, 2011.	☐

If you wish to add additional non-patent literature document citation information please click the Add button **Add**

EXAMINER SIGNATURE

Examiner Signature	/Vijay Shankar/	Date Considered	11/24/2014

*EXAMINER: Initial if reference considered, whether or not citation is in conformance with MPEP 609. Draw line through a citation if not in conformance and not considered. Include copy of this form with next communication to applicant.

EFS Web 2.1.17 ALL REFERENCES CONSIDERED EXCEPT WHERE LINED THROUGH. /V.S./

Receipt date: 12/03/2013	Application Number	13843001 13843001 - GAU: 2697
INFORMATION DISCLOSURE STATEMENT BY APPLICANT (**Not for submission under 37 CFR 1.99)**	Filing Date	2013-03-15
	First Named Inventor	Nissi Vilcovsky
	Art Unit	2656
	Examiner Name	KUNTZ, CURTIS A.
	Attorney Docket Number	067055-002000

[1] See Kind Codes of USPTO Patent Documents at www.USPTO.GOV or MPEP 901.04. [2] Enter office that issued the document, by the two-letter code (WIPO Standard ST.3). [3] For Japanese patent documents, the indication of the year of the reign of the Emperor must precede the serial number of the patent document. [4] Kind of document by the appropriate symbols as indicated on the document under WIPO Standard ST.16 if possible. [5] Applicant is to place a check mark here if English language translation is attached.

EFS Web 2.1.17 ALL REFERENCES CONSIDERED EXCEPT WHERE LINED THROUGH. /V.S./

Receipt date: 12/03/2013	Application Number	13843001	13843001 - GAU: 2697
INFORMATION DISCLOSURE STATEMENT BY APPLICANT (**Not for submission under 37 CFR 1.99)**	Filing Date	2013-03-15	
	First Named Inventor	Nissi Vilcovsky	
	Art Unit	2656	
	Examiner Name	KUNTZ, CURTIS A.	
	Attorney Docket Number	067055-002000	

CERTIFICATION STATEMENT

Please see 37 CFR 1.97 and 1.98 to make the appropriate selection(s):

☐ That each item of information contained in the information disclosure statement was first cited in any communication from a foreign patent office in a counterpart foreign application not more than three months prior to the filing of the information disclosure statement. See 37 CFR 1.97(e)(1).

OR

☐ That no item of information contained in the information disclosure statement was cited in a communication from a foreign patent office in a counterpart foreign application, and, to the knowledge of the person signing the certification after making reasonable inquiry, no item of information contained in the information disclosure statement was known to any individual designated in 37 CFR 1.56(c) more than three months prior to the filing of the information disclosure statement. See 37 CFR 1.97(e)(2).

☐ See attached certification statement.

☐ The fee set forth in 37 CFR 1.17 (p) has been submitted herewith.

☒ A certification statement is not submitted herewith.

SIGNATURE

A signature of the applicant or representative is required in accordance with CFR 1.33, 10.18. Please see CFR 1.4(d) for the form of the signature.

Signature	/Joseph Bach/	Date (YYYY-MM-DD)	2013-12-03
Name/Print	Joseph Bach	Registration Number	37771

This collection of information is required by 37 CFR 1.97 and 1.98. The information is required to obtain or retain a benefit by the public which is to file (and by the USPTO to process) an application. Confidentiality is governed by 35 U.S.C. 122 and 37 CFR 1.14. This collection is estimated to take 1 hour to complete, including gathering, preparing and submitting the completed application form to the USPTO. Time will vary depending upon the individual case. Any comments on the amount of time you require to complete this form and/or suggestions for reducing this burden, should be sent to the Chief Information Officer, U.S. Patent and Trademark Office, U.S. Department of Commerce, P.O. Box 1450, Alexandria, VA 22313-1450. DO NOT SEND FEES OR COMPLETED FORMS TO THIS ADDRESS. **SEND TO: Commissioner for Patents, P.O. Box 1450, Alexandria, VA 22313-1450.**

EFS Web 2.1.17 ALL REFERENCES CONSIDERED EXCEPT WHERE LINED THROUGH. /V.S./

Privacy Act Statement

The Privacy Act of 1974 (P.L. 93-579) requires that you be given certain information in connection with your submission of the attached form related to a patent application or patent. Accordingly, pursuant to the requirements of the Act, please be advised that: (1) the general authority for the collection of this information is 35 U.S.C. 2(b)(2); (2) furnishing of the information solicited is voluntary; and (3) the principal purpose for which the information is used by the U.S. Patent and Trademark Office is to process and/or examine your submission related to a patent application or patent. If you do not furnish the requested information, the U.S. Patent and Trademark Office may not be able to process and/or examine your submission, which may result in termination of proceedings or abandonment of the application or expiration of the patent.

The information provided by you in this form will be subject to the following routine uses:

1. The information on this form will be treated confidentially to the extent allowed under the Freedom of Information Act (5 U.S.C. 552) and the Privacy Act (5 U.S.C. 552a). Records from this system of records may be disclosed to the Department of Justice to determine whether the Freedom of Information Act requires disclosure of these record s.

2. A record from this system of records may be disclosed, as a routine use, in the course of presenting evidence to a court, magistrate, or administrative tribunal, including disclosures to opposing counsel in the course of settlement negotiations.

3. A record in this system of records may be disclosed, as a routine use, to a Member of Congress submitting a request involving an individual, to whom the record pertains, when the individual has requested assistance from the Member with respect to the subject matter of the record.

4. A record in this system of records may be disclosed, as a routine use, to a contractor of the Agency having need for the information in order to perform a contract. Recipients of information shall be required to comply with the requirements of the Privacy Act of 1974, as amended, pursuant to 5 U.S.C. 552a(m).

5. A record related to an International Application filed under the Patent Cooperation Treaty in this system of records may be disclosed, as a routine use, to the International Bureau of the World Intellectual Property Organization, pursuant to the Patent Cooperation Treaty.

6. A record in this system of records may be disclosed, as a routine use, to another federal agency for purposes of National Security review (35 U.S.C. 181) and for review pursuant to the Atomic Energy Act (42 U.S.C. 218(c)).

7. A record from this system of records may be disclosed, as a routine use, to the Administrator, General Services, or his/her designee, during an inspection of records conducted by GSA as part of that agency's responsibility to recommend improvements in records management practices and programs, under authority of 44 U.S.C. 2904 and 2906. Such disclosure shall be made in accordance with the GSA regulations governing inspection of records for this purpose, and any other relevant (i.e., GSA or Commerce) directive. Such disclosure shall not be used to make determinations about individuals.

8. A record from this system of records may be disclosed, as a routine use, to the public after either publication of the application pursuant to 35 U.S.C. 122(b) or issuance of a patent pursuant to 35 U.S.C. 151. Further, a record may be disclosed, subject to the limitations of 37 CFR 1.14, as a routine use, to the public if the record was filed in an application which became abandoned or in which the proceedings were terminated and which application is referenced by either a published application, an application open to public inspections or an issued patent.

9. A record from this system of records may be disclosed, as a routine use, to a Federal, State, or local law enforcement agency, if the USPTO becomes aware of a violation or potential violation of law or regulation.

ALL REFERENCES CONSIDERED EXCEPT WHERE LINED THROUGH. /V.S./

Doc code: IDS
Doc description: Information Disclosure Statement (IDS) Filed

PTO/SB/08a (01-10)
Approved for use through 07/31/2012. OMB 0651-0031
U.S. Patent and Trademark Office; U.S. DEPARTMENT OF COMMERCE
Under the Paperwork Reduction Act of 1995, no persons are required to respond to a collection of information unless it contains a valid OMB control number.

INFORMATION DISCLOSURE STATEMENT BY APPLICANT (Not for submission under 37 CFR 1.99)		
	Application Number	13843001
	Filing Date	2013-03-15
	First Named Inventor	Nissi Vilcovsky
	Art Unit	2697
	Examiner Name	SHANKAR, VIJAY
	Attorney Docket Number	067055-002000

U.S.PATENTS Remove

Examiner Initial*	Cite No	Patent Number	Kind Code[1]	Issue Date	Name of Patentee or Applicant of cited Document	Pages,Columns,Lines where Relevant Passages or Relevant Figures Appear
	1	5551021	A	1996-08-27	Harada et al.	

If you wish to add additional U.S. Patent citation information please click the Add button. Add

U.S.PATENT APPLICATION PUBLICATIONS Remove

Examiner Initial*	Cite No	Publication Number	Kind Code[1]	Publication Date	Name of Patentee or Applicant of cited Document	Pages,Columns,Lines where Relevant Passages or Relevant Figures Appear
	1					

If you wish to add additional U.S. Published Application citation information please click the Add button. Add

FOREIGN PATENT DOCUMENTS Remove

Examiner Initial*	Cite No	Foreign Document Number[3]	Country Code[2] ¡	Kind Code[4]	Publication Date	Name of Patentee or Applicant of cited Document	Pages,Columns,Lines where Relevant Passages or Relevant Figures Appear	T[5]
	1							☐

If you wish to add additional Foreign Patent Document citation information please click the Add button Add

NON-PATENT LITERATURE DOCUMENTS Remove

Examiner Initials*	Cite No	Include name of the author (in CAPITAL LETTERS), title of the article (when appropriate), title of the item (book, magazine, journal, serial, symposium, catalog, etc), date, pages(s), volume-issue number(s), publisher, city and/or country where published.	T[5]

EFS Web 2.1.17 ALL REFERENCES CONSIDERED EXCEPT WHERE LINED THROUGH. /V.S./

Receipt date: 11/20/2014	Application Number	13843001	13843001 - GAU: 2697
INFORMATION DISCLOSURE STATEMENT BY APPLICANT (**Not for submission under 37 CFR 1.99)**	Filing Date	2013-03-15	
	First Named Inventor	Nissi Vilcovsky	
	Art Unit	2697	
	Examiner Name	SHANKAR, VIJAY	
	Attorney Docket Number	067055-002000	

	1		☐

If you wish to add additional non-patent literature document citation information please click the Add button **Add**

EXAMINER SIGNATURE

Examiner Signature	/Vijay Shankar/	Date Considered	11/24/2014

*EXAMINER: Initial if reference considered, whether or not citation is in conformance with MPEP 609. Draw line through a citation if not in conformance and not considered. Include copy of this form with next communication to applicant.

[1] See Kind Codes of USPTO Patent Documents at www.USPTO.GOV or MPEP 901.04. [2] Enter office that issued the document, by the two-letter code (WIPO Standard ST.3). [3] For Japanese patent documents, the indication of the year of the reign of the Emperor must precede the serial number of the patent document. [4] Kind of document by the appropriate symbols as indicated on the document under WIPO Standard ST.16 if possible. [5] Applicant is to place a check mark here if English language translation is attached.

EFS Web 2.1.17 ALL REFERENCES CONSIDERED EXCEPT WHERE LINED THROUGH. /V.S./

Receipt date: 11/20/2014	Application Number	13843001	13843001 - GAU: 2697
INFORMATION DISCLOSURE STATEMENT BY APPLICANT (**Not for submission under 37 CFR 1.99)**	Filing Date	2013-03-15	
	First Named Inventor	Nissi Vilcovsky	
	Art Unit	2697	
	Examiner Name	SHANKAR, VIJAY	
	Attorney Docket Number	067055-002000	

CERTIFICATION STATEMENT

Please see 37 CFR 1.97 and 1.98 to make the appropriate selection(s):

☐ That each item of information contained in the information disclosure statement was first cited in any communication from a foreign patent office in a counterpart foreign application not more than three months prior to the filing of the information disclosure statement. See 37 CFR 1.97(e)(1).

OR

☐ That no item of information contained in the information disclosure statement was cited in a communication from a foreign patent office in a counterpart foreign application, and, to the knowledge of the person signing the certification after making reasonable inquiry, no item of information contained in the information disclosure statement was known to any individual designated in 37 CFR 1.56(c) more than three months prior to the filing of the information disclosure statement. See 37 CFR 1.97(e)(2).

☐ See attached certification statement.

☐ The fee set forth in 37 CFR 1.17 (p) has been submitted herewith.

☒ A certification statement is not submitted herewith.

SIGNATURE

A signature of the applicant or representative is required in accordance with CFR 1.33, 10.18. Please see CFR 1.4(d) for the form of the signature.

Signature	/Joseph Bach/	Date (YYYY-MM-DD)	2014-11-20
Name/Print	Joseph Bach	Registration Number	37,771

This collection of information is required by 37 CFR 1.97 and 1.98. The information is required to obtain or retain a benefit by the public which is to file (and by the USPTO to process) an application. Confidentiality is governed by 35 U.S.C. 122 and 37 CFR 1.14. This collection is estimated to take 1 hour to complete, including gathering, preparing and submitting the completed application form to the USPTO. Time will vary depending upon the individual case. Any comments on the amount of time you require to complete this form and/or suggestions for reducing this burden, should be sent to the Chief Information Officer, U.S. Patent and Trademark Office, U.S. Department of Commerce, P.O. Box 1450, Alexandria, VA 22313-1450. DO NOT SEND FEES OR COMPLETED FORMS TO THIS ADDRESS. **SEND TO: Commissioner for Patents, P.O. Box 1450, Alexandria, VA 22313-1450.**

ALL REFERENCES CONSIDERED EXCEPT WHERE LINED THROUGH. /V.S./

Privacy Act Statement

The Privacy Act of 1974 (P.L. 93-579) requires that you be given certain information in connection with your submission of the attached form related to a patent application or patent. Accordingly, pursuant to the requirements of the Act, please be advised that: (1) the general authority for the collection of this information is 35 U.S.C. 2(b)(2); (2) furnishing of the information solicited is voluntary; and (3) the principal purpose for which the information is used by the U.S. Patent and Trademark Office is to process and/or examine your submission related to a patent application or patent. If you do not furnish the requested information, the U.S. Patent and Trademark Office may not be able to process and/or examine your submission, which may result in termination of proceedings or abandonment of the application or expiration of the patent.

The information provided by you in this form will be subject to the following routine uses:

1. The information on this form will be treated confidentially to the extent allowed under the Freedom of Information Act (5 U.S.C. 552) and the Privacy Act (5 U.S.C. 552a). Records from this system of records may be disclosed to the Department of Justice to determine whether the Freedom of Information Act requires disclosure of these record s.

2. A record from this system of records may be disclosed, as a routine use, in the course of presenting evidence to a court, magistrate, or administrative tribunal, including disclosures to opposing counsel in the course of settlement negotiations.

3. A record in this system of records may be disclosed, as a routine use, to a Member of Congress submitting a request involving an individual, to whom the record pertains, when the individual has requested assistance from the Member with respect to the subject matter of the record.

4. A record in this system of records may be disclosed, as a routine use, to a contractor of the Agency having need for the information in order to perform a contract. Recipients of information shall be required to comply with the requirements of the Privacy Act of 1974, as amended, pursuant to 5 U.S.C. 552a(m).

5. A record related to an International Application filed under the Patent Cooperation Treaty in this system of records may be disclosed, as a routine use, to the International Bureau of the World Intellectual Property Organization, pursuant to the Patent Cooperation Treaty.

6. A record in this system of records may be disclosed, as a routine use, to another federal agency for purposes of National Security review (35 U.S.C. 181) and for review pursuant to the Atomic Energy Act (42 U.S.C. 218(c)).

7. A record from this system of records may be disclosed, as a routine use, to the Administrator, General Services, or his/her designee, during an inspection of records conducted by GSA as part of that agency's responsibility to recommend improvements in records management practices and programs, under authority of 44 U.S.C. 2904 and 2906. Such disclosure shall be made in accordance with the GSA regulations governing inspection of records for this purpose, and any other relevant (i.e., GSA or Commerce) directive. Such disclosure shall not be used to make determinations about individuals.

8. A record from this system of records may be disclosed, as a routine use, to the public after either publication of the application pursuant to 35 U.S.C. 122(b) or issuance of a patent pursuant to 35 U.S.C. 151. Further, a record may be disclosed, subject to the limitations of 37 CFR 1.14, as a routine use, to the public if the record was filed in an application which became abandoned or in which the proceedings were terminated and which application is referenced by either a published application, an application open to public inspections or an issued patent.

9. A record from this system of records may be disclosed, as a routine use, to a Federal, State, or local law enforcement agency, if the USPTO becomes aware of a violation or potential violation of law or regulation.

ALL REFERENCES CONSIDERED EXCEPT WHERE LINED THROUGH. /V.S./

UNITED STATES PATENT AND TRADEMARK OFFICE

UNITED STATES DEPARTMENT OF COMMERCE
United States Patent and Trademark Office
Address: COMMISSIONER FOR PATENTS
P.O. Box 1450
Alexandria, Virginia 22313-1450
www.uspto.gov

BIB DATA SHEET

CONFIRMATION NO. 2550

SERIAL NUMBER	FILING or 371(c) DATE	CLASS	GROUP ART UNIT	ATTORNEY DOCKET NO.
13/843,001	03/15/2013 RULE	345	2697	067055-002000

APPLICANTS

INVENTORS

Nissi Vilcovsky, Tokyo, JAPAN;
Ofer Saban, Vienna, VA;

**** CONTINUING DATA ***************************

This application is a CIP of 13/088,369 04/17/2011 PAT 8624883
which is a CON of 11/817,411 08/30/2007 PAT 7948481
which is a 371 of PCT/IL06/00281 03/01/2006
which claims benefit of 60/656,884 03/01/2005
and claims benefit of 60/656,885 03/01/2005
This application 13/843,001 03/15/2013
claims benefit of 61/738,957 12/18/2012

**** FOREIGN APPLICATIONS ***************************

**** IF REQUIRED, FOREIGN FILING LICENSE GRANTED **** ** SMALL ENTITY **
05/02/2013

Foreign Priority claimed	☐ Yes ☑ No		STATE OR COUNTRY	SHEETS DRAWINGS	TOTAL CLAIMS	INDEPENDENT CLAIMS
35 USC 119(a-d) conditions met	☐ Yes ☑ No	☐ Met after Allowance				
Verified and Acknowledged	/VIJAY SHANKAR/ Examiner's Signature	Initials	JAPAN	10	20	1

ADDRESS

Nixon Peabody LLP
P.O. Box 60610
Palo Alto, CA 94306
UNITED STATES

TITLE

DEVICES, SYSTEMS AND METHODS OF CAPTURING AND DISPLAYING APPEARANCES

FILING FEE RECEIVED		
603	FEES: Authority has been given in Paper No._____ to charge/credit DEPOSIT ACCOUNT No._____ for following:	☐ All Fees ☐ 1.16 Fees (Filing) ☐ 1.17 Fees (Processing Ext. of time) ☐ 1.18 Fees (Issue) ☐ Other _____ ☐ Credit

BIB (Rev. 05/07).

Search Notes	Application/Control No.	Applicant(s)/Patent Under Reexamination
	13843001	VILCOVSKY ET AL.
	Examiner	**Art Unit**
	VIJAY SHANKAR	2697

CPC- SEARCHED		
Symbol	**Date**	**Examiner**
G06F 3/005, 3/01, 3/011	11/24/2014	VS

CPC COMBINATION SETS - SEARCHED		
Symbol	**Date**	**Examiner**

US CLASSIFICATION SEARCHED			
Class	**Subclass**	**Date**	**Examiner**
345	204-215	11/24/2014	VS
348	333.01	11/24/2014	VS
434	395	11/24/2014	VS

SEARCH NOTES		
Search Notes	**Date**	**Examiner**
INVENTORS NAME SEARCH	11/24/2014	VS

INTERFERENCE SEARCH			
US Class/ CPC Symbol	**US Subclass / CPC Group**	**Date**	**Examiner**
SAME	AS SEARCH	11/24/2014	VS

Under the Paperwork Reduction Act of 1995, no persons are required to respond to a collection of information unless it contains a valid OMB control number.

INFORMATION DISCLOSURE STATEMENT BY APPLICANT (**Not for submission under 37 CFR 1.99)**		
	Application Number	13843001
	Filing Date	2013-03-15
	First Named Inventor	Nissi Vilcovsky
	Art Unit	2653
	Examiner Name	PATEL, HEMANT SHANTILAL
	Attorney Docket Number	067055-002000

U.S.PATENTS						Remove
Examiner Initial*	Cite No	Patent Number	Kind Code[1]	Issue Date	Name of Patentee or Applicant of cited Document	Pages,Columns,Lines where Relevant Passages or Relevant Figures Appear
	1	6417850	B1	2002-07-09	Kang	
	2	8624883	B2	2014-01-07	Vilcosky	
If you wish to add additional U.S. Patent citation information please click the Add button.						Add

U.S.PATENT APPLICATION PUBLICATIONS						Remove
Examiner Initial*	Cite No	Publication Number	Kind Code[1]	Publication Date	Name of Patentee or Applicant of cited Document	Pages,Columns,Lines where Relevant Passages or Relevant Figures Appear
	1	20050047629	A1	2005-03-03	Farrell et al.	
	2	20050259158	A1	2005-11-24	Jacob et al.	
	3	20060007303	A1	2006-01-12	Milton	
	4	20070120954	A1	2007-05-31	Allen et al.	

ALL REFERENCES CONSIDERED EXCEPT WHERE LINED THROUGH. /V.S./

Receipt date: 11/06/2014	Application Number	13843001	13843001 - GAU: 2697
INFORMATION DISCLOSURE STATEMENT BY APPLICANT (**Not for submission under 37 CFR 1.99)**	Filing Date	2013-03-15	
	First Named Inventor	Nissi Vilcovsky	
	Art Unit	2653	
	Examiner Name	PATEL, HEMANT SHANTILAL	
	Attorney Docket Number	067055-002000	

	5	20070132863	A1	2007-06-14	Deguchi	
	6	20080151092	A1	2008-06-26	Vilcovsky	
	7	20090051779	A1	2009-02-26	Rolston	
	8	20100097442	A1	2010-04-22	Lablans	
	9	20100190510	A1	2010-07-29	Maranhas et al.	
	10	20100191578	A1	2010-07-29	Tran et al.	
	11	20110210970	A1	2011-09-01	Segawa	
	12	20120169850	A1	2012-07-05	Kim et al.	
	13	20120177284	A1	2012-07-12	Wang	
	14	20140225977	A1	2014-08-14	Vilcovsky et al.	
	15	20140225978	A1	2014-08-14	Saban et al.	

EFS Web 2.1.17 ALL REFERENCES CONSIDERED EXCEPT WHERE LINED THROUGH. /V.S./

Receipt date: 11/06/2014	Application Number	13843001 13843001 - GAU: 2697
INFORMATION DISCLOSURE STATEMENT BY APPLICANT (**Not for submission under 37 CFR 1.99)**	Filing Date	2013-03-15
	First Named Inventor	Nissi Vilcovsky
	Art Unit	2653
	Examiner Name	PATEL, HEMANT SHANTILAL
	Attorney Docket Number	067055-002000

	16	20140226000	A1	2014-08-14	Vilcovsky et al.	
	17	20140226900	A1	2014-08-14	Saban et al.	

If you wish to add additional U.S. Published Application citation information please click the Add button. Add

FOREIGN PATENT DOCUMENTS Remove

Examiner Initial*	Cite No	Foreign Document Number[3]	Country Code[2] ¡	Kind Code[4]	Publication Date	Name of Patentee or Applicant of cited Document	Pages,Columns,Lines where Relevant Passages or Relevant Figures Appear	T[5]
	1	1859432	EP	A2	2007-11-28	Nissi Vilcovsky		☐
	2	2006/092793	WO	A2	2006-09-08	Nissi Vilcovsky		☐
	3	2014/100250	WO	A2	2014-06-26	Nissi Vilcovsky, et al.		☐

If you wish to add additional Foreign Patent Document citation information please click the Add button Add

NON-PATENT LITERATURE DOCUMENTS Remove

Examiner Initials*	Cite No	Include name of the author (in CAPITAL LETTERS), title of the article (when appropriate), title of the item (book, magazine, journal, serial, symposium, catalog, etc), date, pages(s), volume-issue number(s), publisher, city and/or country where published.	T[5]
	1	Decision to Refuse for European Patent Application No. 06711263.1 dated November 4, 2014.	☐
	2	International Search Report and Written Opinion for PCT/US2013/076253 dated May 6, 2014.	☐

EFS Web 2.1.17 ALL REFERENCES CONSIDERED EXCEPT WHERE LINED THROUGH. /V.S./

Receipt date: 11/06/2014	Application Number	13843001 13843001 - GAU: 2697
INFORMATION DISCLOSURE STATEMENT BY APPLICANT (**Not for submission under 37 CFR 1.99)**	Filing Date	2013-03-15
	First Named Inventor	Nissi Vilcovsky
	Art Unit	2653
	Examiner Name	PATEL, HEMANT SHANTILAL
	Attorney Docket Number	067055-002000

	3	Notice of Allowance for U.S. Patent Application No. 14/253,800 dated October 24, 2014.	☐
	4	Invitation to Pay Additional Fees And, Where Applicable, Protest Fee for PCT/US2014/034333 dated August 8, 2014.	☐

If you wish to add additional non-patent literature document citation information please click the Add button **Add**

EXAMINER SIGNATURE

Examiner Signature	/Vijay Shankar/	Date Considered	11/24/2014

*EXAMINER: Initial if reference considered, whether or not citation is in conformance with MPEP 609. Draw line through a citation if not in conformance and not considered. Include copy of this form with next communication to applicant.

[1] See Kind Codes of USPTO Patent Documents at www.USPTO.GOV or MPEP 901.04. [2] Enter office that issued the document, by the two-letter code (WIPO Standard ST.3). [3] For Japanese patent documents, the indication of the year of the reign of the Emperor must precede the serial number of the patent document. [4] Kind of document by the appropriate symbols as indicated on the document under WIPO Standard ST.16 if possible. [5] Applicant is to place a check mark here if English language translation is attached.

ALL REFERENCES CONSIDERED EXCEPT WHERE LINED THROUGH. /V.S./

Receipt date: 11/06/2014	Application Number	13843001	13843001 - GAU: 2697
INFORMATION DISCLOSURE STATEMENT BY APPLICANT (**Not for submission under 37 CFR 1.99)**	Filing Date	2013-03-15	
	First Named Inventor	Nissi Vilcovsky	
	Art Unit	2653	
	Examiner Name	PATEL, HEMANT SHANTILAL	
	Attorney Docket Number	067055-002000	

CERTIFICATION STATEMENT

Please see 37 CFR 1.97 and 1.98 to make the appropriate selection(s):

☐ That each item of information contained in the information disclosure statement was first cited in any communication from a foreign patent office in a counterpart foreign application not more than three months prior to the filing of the information disclosure statement. See 37 CFR 1.97(e)(1).

OR

☐ That no item of information contained in the information disclosure statement was cited in a communication from a foreign patent office in a counterpart foreign application, and, to the knowledge of the person signing the certification after making reasonable inquiry, no item of information contained in the information disclosure statement was known to any individual designated in 37 CFR 1.56(c) more than three months prior to the filing of the information disclosure statement. See 37 CFR 1.97(e)(2).

☐ See attached certification statement.

☐ The fee set forth in 37 CFR 1.17 (p) has been submitted herewith.

☒ A certification statement is not submitted herewith.

SIGNATURE

A signature of the applicant or representative is required in accordance with CFR 1.33, 10.18. Please see CFR 1.4(d) for the form of the signature.

Signature	/Joseph Bach/	Date (YYYY-MM-DD)	2014-11-06
Name/Print	Joseph Bach	Registration Number	37,771

This collection of information is required by 37 CFR 1.97 and 1.98. The information is required to obtain or retain a benefit by the public which is to file (and by the USPTO to process) an application. Confidentiality is governed by 35 U.S.C. 122 and 37 CFR 1.14. This collection is estimated to take 1 hour to complete, including gathering, preparing and submitting the completed application form to the USPTO. Time will vary depending upon the individual case. Any comments on the amount of time you require to complete this form and/or suggestions for reducing this burden, should be sent to the Chief Information Officer, U.S. Patent and Trademark Office, U.S. Department of Commerce, P.O. Box 1450, Alexandria, VA 22313-1450. DO NOT SEND FEES OR COMPLETED FORMS TO THIS ADDRESS. **SEND TO: Commissioner for Patents, P.O. Box 1450, Alexandria, VA 22313-1450.**

ALL REFERENCES CONSIDERED EXCEPT WHERE LINED THROUGH. /V.S./

Privacy Act Statement

The Privacy Act of 1974 (P.L. 93-579) requires that you be given certain information in connection with your submission of the attached form related to a patent application or patent. Accordingly, pursuant to the requirements of the Act, please be advised that: (1) the general authority for the collection of this information is 35 U.S.C. 2(b)(2); (2) furnishing of the information solicited is voluntary; and (3) the principal purpose for which the information is used by the U.S. Patent and Trademark Office is to process and/or examine your submission related to a patent application or patent. If you do not furnish the requested information, the U.S. Patent and Trademark Office may not be able to process and/or examine your submission, which may result in termination of proceedings or abandonment of the application or expiration of the patent.

The information provided by you in this form will be subject to the following routine uses:

1. The information on this form will be treated confidentially to the extent allowed under the Freedom of Information Act (5 U.S.C. 552) and the Privacy Act (5 U.S.C. 552a). Records from this system of records may be disclosed to the Department of Justice to determine whether the Freedom of Information Act requires disclosure of these record s.

2. A record from this system of records may be disclosed, as a routine use, in the course of presenting evidence to a court, magistrate, or administrative tribunal, including disclosures to opposing counsel in the course of settlement negotiations.

3. A record in this system of records may be disclosed, as a routine use, to a Member of Congress submitting a request involving an individual, to whom the record pertains, when the individual has requested assistance from the Member with respect to the subject matter of the record.

4. A record in this system of records may be disclosed, as a routine use, to a contractor of the Agency having need for the information in order to perform a contract. Recipients of information shall be required to comply with the requirements of the Privacy Act of 1974, as amended, pursuant to 5 U.S.C. 552a(m).

5. A record related to an International Application filed under the Patent Cooperation Treaty in this system of records may be disclosed, as a routine use, to the International Bureau of the World Intellectual Property Organization, pursuant to the Patent Cooperation Treaty.

6. A record in this system of records may be disclosed, as a routine use, to another federal agency for purposes of National Security review (35 U.S.C. 181) and for review pursuant to the Atomic Energy Act (42 U.S.C. 218(c)).

7. A record from this system of records may be disclosed, as a routine use, to the Administrator, General Services, or his/her designee, during an inspection of records conducted by GSA as part of that agency's responsibility to recommend improvements in records management practices and programs, under authority of 44 U.S.C. 2904 and 2906. Such disclosure shall be made in accordance with the GSA regulations governing inspection of records for this purpose, and any other relevant (i.e., GSA or Commerce) directive. Such disclosure shall not be used to make determinations about individuals.

8. A record from this system of records may be disclosed, as a routine use, to the public after either publication of the application pursuant to 35 U.S.C. 122(b) or issuance of a patent pursuant to 35 U.S.C. 151. Further, a record may be disclosed, subject to the limitations of 37 CFR 1.14, as a routine use, to the public if the record was filed in an application which became abandoned or in which the proceedings were terminated and which application is referenced by either a published application, an application open to public inspections or an issued patent.

9. A record from this system of records may be disclosed, as a routine use, to a Federal, State, or local law enforcement agency, if the USPTO becomes aware of a violation or potential violation of law or regulation.

ALL REFERENCES CONSIDERED EXCEPT WHERE LINED THROUGH. /V.S./

Issue Classification	Application/Control No.	Applicant(s)/Patent Under Reexamination
	13843001	VILCOVSKY ET AL.
	Examiner	**Art Unit**
	VIJAY SHANKAR	2697

CPC						
Symbol					**Type**	**Version**
H04N		7	/	15	F	2013-01-01
G02B		5	/	08	I	2013-01-01
G09F		19	/	16	I	2013-01-01
G09F		27	/	00	I	2013-01-01
H04N		7	/	144	I	2013-01-01
G06F		3	/	011	I	2013-01-01
H04N		1	/	622	I	2013-01-01
G06T		3	/	00	I	2013-01-01
H04N		5	/	2624	A	2013-01-01
A47F		2007	/	195	A	2013-01-01
H04N		2005	/	2726	A	2013-01-01
H04N		5	/	2628	A	2013-01-01
			/			
			/			
			/			

CPC Combination Sets								
Symbol					**Type**	**Set**	**Ranking**	**Version**
			/					
			/					

NONE (Assistant Examiner)	(Date)	**Total Claims Allowed:** 18	
/VIJAY SHANKAR/ Primary Examiner.Art Unit 2697 (Primary Examiner)	11/24/14 (Date)	O.G. Print Claim(s) 1	O.G. Print Figure 2A, 2B

U.S. Patent and Trademark Office

Part of Paper No. 20141124

Issue Classification	Application/Control No.	Applicant(s)/Patent Under Reexamination
	13843001	VILCOVSKY ET AL.
	Examiner	**Art Unit**
	VIJAY SHANKAR	2697

US ORIGINAL CLASSIFICATION		INTERNATIONAL CLASSIFICATION	
CLASS	SUBCLASS	CLAIMED	NON-CLAIMED
345	204	G 0 6 F 3 / 038 (2013.01.01)	

CROSS REFERENCE(S)					
CLASS	SUBCLASS (ONE SUBCLASS PER BLOCK)				
345	212	214			

NONE (Assistant Examiner)	(Date)	Total Claims Allowed: 18	
/VIJAY SHANKAR/ Primary Examiner.Art Unit 2697 (Primary Examiner)	11/24/14 (Date)	O.G. Print Claim(s) 1	O.G. Print Figure 2A, 2B

U.S. Patent and Trademark Office

Part of Paper No. 20141124

Issue Classification	Application/Control No.	Applicant(s)/Patent Under Reexamination
	13843001	VILCOVSKY ET AL.
	Examiner	**Art Unit**
	VIJAY SHANKAR	2697

☐ Claims renumbered in the same order as presented by applicant ☐ CPA ☐ T.D. ☐ R.1.47

Final	Original	Final	Original	Final	Original	Final	Original	Final	Original	Final	Original	Final	Original	Final	Original
1	1	-	17												
2	2	-	18												
3	3	17	19												
4	4	18	20												
5	5														
6	6														
7	7														
8	8														
9	9														
10	10														
11	11														
12	12														
13	13														
14	14														
15	15														
16	16														

NONE (Assistant Examiner)	(Date)	**Total Claims Allowed:** 18	
/VIJAY SHANKAR/ Primary Examiner.Art Unit 2697 (Primary Examiner)	11/24/14 (Date)	O.G. Print Claim(s) 1	O.G. Print Figure 2A, 2B

U.S. Patent and Trademark Office

Part of Paper No. 20141124

PTO/SB/08a (01-10)
Approved for use through 07/31/2012. OMB 0651-0031
U.S. Patent and Trademark Office; U.S. DEPARTMENT OF COMMERCE

Under the Paperwork Reduction Act of 1995, no persons are required to respond to a collection of information unless it contains a valid OMB control number.

INFORMATION DISCLOSURE STATEMENT BY APPLICANT

(Not for submission under 37 CFR 1.99)

Application Number	13843001
Filing Date	2013-03-15
First Named Inventor	Nissi Vilcovsky
Art Unit	2697
Examiner Name	SHANKAR, VIJAY
Attorney Docket Number	067055-002000

U.S.PATENTS Remove

Examiner Initial*	Cite No	Patent Number	Kind Code[1]	Issue Date	Name of Patentee or Applicant of cited Document	Pages,Columns,Lines where Relevant Passages or Relevant Figures Appear
	1	5230039	A	1993-07-20	Grossman et al.	
	2	5923776	A	1999-07-13	Kamgar-Parsi	
	3	5937081	A	1999-08-10	O'Brill et al.	
	4	6195467	B1	2001-02-27	Asimopoulos et al.	
	5	6366694	B1	2002-04-02	Acharya	
	6	7874481	B2	2011-01-25	Silverbrook et al.	
	7	8000727	B1	2011-08-16	Bushman et al.	

If you wish to add additional U.S. Patent citation information please click the Add button. Add

U.S.PATENT APPLICATION PUBLICATIONS Remove

INFORMATION DISCLOSURE STATEMENT BY APPLICANT (Not for submission under 37 CFR 1.99)	Application Number	13843001
	Filing Date	2013-03-15
	First Named Inventor	Nissi Vilcovsky
	Art Unit	2697
	Examiner Name	SHANKAR, VIJAY
	Attorney Docket Number	067055-002000

Examiner Initial*	Cite No	Publication Number	Kind Code[1]	Publication Date	Name of Patentee or Applicant of cited Document	Pages,Columns,Lines where Relevant Passages or Relevant Figures Appear
	1	20020049546	A1	2002-04-25	Shimomura	
	2	20030110099	A1	2003-06-12	Trajkovic et al.	
	3	20030146901	A1	2003-08-07	Ryan	
	4	20060158534	A1	2006-07-20	Gotohda	
	5	20070040033	A1	2007-02-22	Rosenberg	
	6	20080056564	A1	2008-03-06	Lindbloom	
	7	20100169411	A1	2010-07-01	Colton et al.	
	8	20120120184	A1	2012-05-17	Fornell et al.	
	9	20120154872	A1	2012-06-21	Reddy	
	10	20120229637	A1	2012-09-13	Mooradian et al.	

EFS Web 2.1.17

INFORMATION DISCLOSURE STATEMENT BY APPLICANT (Not for submission under 37 CFR 1.99)	Application Number	13843001
	Filing Date	2013-03-15
	First Named Inventor	Nissi Vilcovsky
	Art Unit	2697
	Examiner Name	SHANKAR, VIJAY
	Attorney Docket Number	067055-002000

	11	20120233089	A1	2012-09-13	Calman et al.	
	12	20130083015	A1	2013-04-04	Hernandez Esteban	
	13	20130088562	A1	2013-04-11	Hong et al.	

If you wish to add additional U.S. Published Application citation information please click the Add button. Add

FOREIGN PATENT DOCUMENTS Remove

Examiner Initial*	Cite No	Foreign Document Number[3]	Country Code[2] ¡	Kind Code[4]	Publication Date	Name of Patentee or Applicant of cited Document	Pages,Columns,Lines where Relevant Passages or Relevant Figures Appear	T[5]
	1							☐

If you wish to add additional Foreign Patent Document citation information please click the Add button Add

NON-PATENT LITERATURE DOCUMENTS Remove

Examiner Initials*	Cite No	Include name of the author (in CAPITAL LETTERS), title of the article (when appropriate), title of the item (book, magazine, journal, serial, symposium, catalog, etc), date, pages(s), volume-issue number(s), publisher, city and/or country where published.	T[5]
	1	International Search Report and Written Opinion for PCT/US2014/034333 dated December 17, 2014.	☐
	2	Notice of Allowance for U.S. Patent Application No. 14/253,827 dated December 15, 2014.	☐
	3	Notice of Allowance for U.S. Patent Application No. 14/253,831 dated December 3, 2014.	☐

If you wish to add additional non-patent literature document citation information please click the Add button Add

INFORMATION DISCLOSURE STATEMENT BY APPLICANT (Not for submission under 37 CFR 1.99)		
	Application Number	13843001
	Filing Date	2013-03-15
	First Named Inventor	Nissi Vilcovsky
	Art Unit	2697
	Examiner Name	SHANKAR, VIJAY
	Attorney Docket Number	067055-002000

EXAMINER SIGNATURE			
Examiner Signature		Date Considered	

*EXAMINER: Initial if reference considered, whether or not citation is in conformance with MPEP 609. Draw line through a citation if not in conformance and not considered. Include copy of this form with next communication to applicant.

[1] See Kind Codes of USPTO Patent Documents at www.USPTO.GOV or MPEP 901.04. [2] Enter office that issued the document, by the two-letter code (WIPO Standard ST.3). [3] For Japanese patent documents, the indication of the year of the reign of the Emperor must precede the serial number of the patent document. [4] Kind of document by the appropriate symbols as indicated on the document under WIPO Standard ST.16 if possible. [5] Applicant is to place a check mark here if English language translation is attached.

INFORMATION DISCLOSURE STATEMENT BY APPLICANT (Not for submission under 37 CFR 1.99)	Application Number	13843001
	Filing Date	2013-03-15
	First Named Inventor	Nissi Vilcovsky
	Art Unit	2697
	Examiner Name	SHANKAR, VIJAY
	Attorney Docket Number	067055-002000

CERTIFICATION STATEMENT

Please see 37 CFR 1.97 and 1.98 to make the appropriate selection(s):

☒ That each item of information contained in the information disclosure statement was first cited in any communication from a foreign patent office in a counterpart foreign application not more than three months prior to the filing of the information disclosure statement. See 37 CFR 1.97(e)(1).

OR

☐ That no item of information contained in the information disclosure statement was cited in a communication from a foreign patent office in a counterpart foreign application, and, to the knowledge of the person signing the certification after making reasonable inquiry, no item of information contained in the information disclosure statement was known to any individual designated in 37 CFR 1.56(c) more than three months prior to the filing of the information disclosure statement. See 37 CFR 1.97(e)(2).

☐ See attached certification statement.

☒ The fee set forth in 37 CFR 1.17 (p) has been submitted herewith.

☐ A certification statement is not submitted herewith.

SIGNATURE

A signature of the applicant or representative is required in accordance with CFR 1.33, 10.18. Please see CFR 1.4(d) for the form of the signature.

Signature	/Joseph Bach/	Date (YYYY-MM-DD)	2015-01-06
Name/Print	Joseph Bach	Registration Number	37,771

This collection of information is required by 37 CFR 1.97 and 1.98. The information is required to obtain or retain a benefit by the public which is to file (and by the USPTO to process) an application. Confidentiality is governed by 35 U.S.C. 122 and 37 CFR 1.14. This collection is estimated to take 1 hour to complete, including gathering, preparing and submitting the completed application form to the USPTO. Time will vary depending upon the individual case. Any comments on the amount of time you require to complete this form and/or suggestions for reducing this burden, should be sent to the Chief Information Officer, U.S. Patent and Trademark Office, U.S. Department of Commerce, P.O. Box 1450, Alexandria, VA 22313-1450. DO NOT SEND FEES OR COMPLETED FORMS TO THIS ADDRESS. **SEND TO: Commissioner for Patents, P.O. Box 1450, Alexandria, VA 22313-1450.**

Privacy Act Statement

The Privacy Act of 1974 (P.L. 93-579) requires that you be given certain information in connection with your submission of the attached form related to a patent application or patent. Accordingly, pursuant to the requirements of the Act, please be advised that: (1) the general authority for the collection of this information is 35 U.S.C. 2(b)(2); (2) furnishing of the information solicited is voluntary; and (3) the principal purpose for which the information is used by the U.S. Patent and Trademark Office is to process and/or examine your submission related to a patent application or patent. If you do not furnish the requested information, the U.S. Patent and Trademark Office may not be able to process and/or examine your submission, which may result in termination of proceedings or abandonment of the application or expiration of the patent.

The information provided by you in this form will be subject to the following routine uses:

1. The information on this form will be treated confidentially to the extent allowed under the Freedom of Information Act (5 U.S.C. 552) and the Privacy Act (5 U.S.C. 552a). Records from this system of records may be disclosed to the Department of Justice to determine whether the Freedom of Information Act requires disclosure of these record s.

2. A record from this system of records may be disclosed, as a routine use, in the course of presenting evidence to a court, magistrate, or administrative tribunal, including disclosures to opposing counsel in the course of settlement negotiations.

3. A record in this system of records may be disclosed, as a routine use, to a Member of Congress submitting a request involving an individual, to whom the record pertains, when the individual has requested assistance from the Member with respect to the subject matter of the record.

4. A record in this system of records may be disclosed, as a routine use, to a contractor of the Agency having need for the information in order to perform a contract. Recipients of information shall be required to comply with the requirements of the Privacy Act of 1974, as amended, pursuant to 5 U.S.C. 552a(m).

5. A record related to an International Application filed under the Patent Cooperation Treaty in this system of records may be disclosed, as a routine use, to the International Bureau of the World Intellectual Property Organization, pursuant to the Patent Cooperation Treaty.

6. A record in this system of records may be disclosed, as a routine use, to another federal agency for purposes of National Security review (35 U.S.C. 181) and for review pursuant to the Atomic Energy Act (42 U.S.C. 218(c)).

7. A record from this system of records may be disclosed, as a routine use, to the Administrator, General Services, or his/her designee, during an inspection of records conducted by GSA as part of that agency's responsibility to recommend improvements in records management practices and programs, under authority of 44 U.S.C. 2904 and 2906. Such disclosure shall be made in accordance with the GSA regulations governing inspection of records for this purpose, and any other relevant (i.e., GSA or Commerce) directive. Such disclosure shall not be used to make determinations about individuals.

8. A record from this system of records may be disclosed, as a routine use, to the public after either publication of the application pursuant to 35 U.S.C. 122(b) or issuance of a patent pursuant to 35 U.S.C. 151. Further, a record may be disclosed, subject to the limitations of 37 CFR 1.14, as a routine use, to the public if the record was filed in an application which became abandoned or in which the proceedings were terminated and which application is referenced by either a published application, an application open to public inspections or an issued patent.

9. A record from this system of records may be disclosed, as a routine use, to a Federal, State, or local law enforcement agency, if the USPTO becomes aware of a violation or potential violation of law or regulation.

PATENT COOPERATION TREATY

From the INTERNATIONAL SEARCHING AUTHORITY

To: JOSEPH BACH
NIXON PEABODY LLP
P.O. BOX 60610
PALO ALTO, CA 94306

PCT

NOTIFICATION OF TRANSMITTAL OF THE INTERNATIONAL SEARCH REPORT AND THE WRITTEN OPINION OF THE INTERNATIONAL SEARCHING AUTHORITY, OR THE DECLARATION

(PCT Rule 44.1)

	Date of mailing *(day/month/year)* 17 DEC 2014
Applicant's or agent's file reference 067055-002101	**FOR FURTHER ACTION** See paragraphs 1 and 4 below
International application No. PCT/US2014/034333	International filing date *(day/month/year)* 16 April 2014
Applicant EYESMATCH LTD	

1. ☒ The applicant is hereby notified that the international search report and the written opinion of the International Searching Authority have been established and are transmitted herewith.

   Filing of amendments and statement under Article 19:
   The applicant is entitled, if he so wishes, to amend the claims of the international application (see Rule 46):

   When? The time limit for filing such amendments is normally two months from the date of transmittal of the international search report.

   How? Directly to the International Bureau of WIPO preferably through ePCT or on paper to, 34 chemin des Colombettes 1211 Geneva 20, Switzerland, Facsimile No.: +41 22 338 82 70

   For more detailed instructions, see *PCT Applicant's Guide*, International Phase, paragraphs 9.004 – 9.011.

2. ☐ The applicant is hereby notified that no international search report will be established and that the declaration under Article 17(2)(a) to that effect and the written opinion of the International Searching Authority are transmitted herewith.

3. ☐ **With regard to any protest** against payment of (an) additional fee(s) under Rule 40.2, the applicant is notified that:

   ☐ the protest together with the decision thereon has been transmitted to the International Bureau together with any request to forward the texts of both the protest and the decision thereon to the designated Offices.

   ☐ no decision has been made yet on the protest; the applicant will be notified as soon as a decision is made.

4. **Reminders**

   The applicant may **submit comments on an informal basis on the written opinion of the International Searching Authority** to the International Bureau. These comments will be made available to the public after international publication. The International Bureau will send a copy of such comments to all designated Offices unless an international preliminary examination report has been or is to be established.

   Shortly after the expiration of **18 months from the priority date, the international application will be published** by the International Bureau. If the applicant wishes to avoid or postpone publication, a notice of withdrawal of the international application, or of the priority claim, must reach the International Bureau before the completion of the technical preparations for international publication (Rules 90*bis*.1 and 90*bis*.3).

   Within **19 months** from the priority date, but only in respect of some designated Offices, a demand for international preliminary examination must be filed if the applicant wishes to postpone the entry into the national phase **until 30 months** from the priority date (in some Offices even later); otherwise, the applicant must, **within 20 months** from the priority date, perform the prescribed acts for **entry into the national phase** before those designated Offices. In respect of other designated Offices, the time limit of **30 months** (or later) will apply even if no demand is filed within 19 months. For details about the applicable time limits, Office by Office, see www.wipo.int/pct/en/texts/time_limits.html and the *PCT Applicant's Guide*, National Chapters.

   Within **19 months from the priority date, the applicant may request that a supplementary international search be carried out** by a different International Searching Authority that offers this service (Rule 45*bis*.1). The procedure for requesting supplementary international search is described in the *PCT Applicant's Guide*, International Phase, paragraphs 8.006-8.032.

Name and mailing address of the ISA/ Mail Stop PCT, Attn: ISA/US Commissioner for Patents P.O. Box 1450, Alexandria, Virginia 22313-1450 Facsimile No. 571-273-3201	Authorized officer Blaine R. Copenheaver Telephone No. PCT Helpdesk: 571-272-4300 PCT OSP: 571-272-7774

Form PCT/ISA/220 (July 2014)

PATENT COOPERATION TREATY

PCT

INTERNATIONAL SEARCH REPORT

(PCT Article 18 and Rules 43 and 44)

Applicant's or agent's file reference 067055-002101	**FOR FURTHER ACTION**	see Form PCT/ISA/220 as well as, where applicable, item 5 below.
International application No. PCT/US2014/034333	International filing date *(day/month/year)* 16 April 2014	(Earliest) Priority Date *(day/month/year)* 04 August 2013
Applicant EYESMATCH LTD		

This international search report has been prepared by this International Searching Authority and is transmitted to the applicant according to Article 18. A copy is being transmitted to the International Bureau.

This international search report consists of a total of 5 sheets.

☐ It is also accompanied by a copy of each prior art document cited in this report.

1. **Basis of the report**
   a. With regard to the **language**, the international search was carried out on the basis of:
      ☒ the international application in the language in which it was filed.
      ☐ a translation of the international application into _____ which is the language of a translation furnished for the purposes of international search (Rules 12.3(a) and 23.1(b)).
   b. ☐ This international search report has been established taking into account the **rectification of an obvious mistake** authorized by or notified to this Authority under Rule 91 (Rule 43.6*bis*(a)).
   c. ☐ With regard to any **nucleotide and/or amino acid sequence** disclosed in the international application, see Box No. I.
2. ☐ **Certain claims were found unsearchable** (see Box No. II).
3. ☒ **Unity of invention is lacking** (see Box No. III).
4. With regard to the **title**,
   ☒ the text is approved as submitted by the applicant.
   ☐ the text has been established by this Authority to read as follows:
5. With regard to the **abstract**,
   ☒ the text is approved as submitted by the applicant.
   ☐ the text has been established, according to Rule 38.2, by this Authority as it appears in Box No. IV. The applicant may, within one month from the date of mailing of this international search report, submit comments to this Authority.
6. With regard to the **drawings**,
   a. the figure of the **drawings** to be published with the abstract is Figure No. 15
      ☒ as suggested by the applicant.
      ☐ as selected by this Authority, because the applicant failed to suggest a figure.
      ☐ as selected by this Authority, because this figure better characterizes the invention.
   b. ☐ none of the figures is to be published with the abstract.

Form PCT/ISA/210 (first sheet) (July 2009)

INTERNATIONAL SEARCH REPORT

International application No.
PCT/US2014/034333

Box No. II Observations where certain claims were found unsearchable (Continuation of item 2 of first sheet)

This international search report has not been established in respect of certain claims under Article 17(2)(a) for the following reasons:

1. ☐ Claims Nos.:
because they relate to subject matter not required to be searched by this Authority, namely:

2. ☐ Claims Nos.:
because they relate to parts of the international application that do not comply with the prescribed requirements to such an extent that no meaningful international search can be carried out, specifically:

3. ☐ Claims Nos.:
because they are dependent claims and are not drafted in accordance with the second and third sentences of Rule 6.4(a).

Box No. III Observations where unity of invention is lacking (Continuation of item 3 of first sheet)

This International Searching Authority found multiple inventions in this international application, as follows:

See last page.

1. ☐ As all required additional search fees were timely paid by the applicant, this international search report covers all searchable claims.

2. ☐ As all searchable claims could be searched without effort justifying additional fees, this Authority did not invite payment of additional fees.

3. ☐ As only some of the required additional search fees were timely paid by the applicant, this international search report covers only those claims for which fees were paid, specifically claims Nos.:

4. ☒ No required additional search fees were timely paid by the applicant. Consequently, this international search report is restricted to the invention first mentioned in the claims; it is covered by claims Nos.:
1-20

Remark on Protest

☐ The additional search fees were accompanied by the applicant's protest and, where applicable, the payment of a protest fee.

☐ The additional search fees were accompanied by the applicant's protest but the applicable protest fee was not paid within the time limit specified in the invitation.

☐ No protest accompanied the payment of additional search fees.

INTERNATIONAL SEARCH REPORT

International application No.
PCT/US2014/034333

A. CLASSIFICATION OF SUBJECT MATTER
IPC(8) - G06F 17/00 (2014.01)
USPC - G06F 17/00
According to International Patent Classification (IPC) or to both national classification and IPC

B. FIELDS SEARCHED

Minimum documentation searched (classification system followed by classification symbols)
IPC(8) - G06F 17/00; G09B 25/00; H04N 5/222; 7/15 (2014.01)
USPC - 348/14.12, 333.01, 705/27.1

Documentation searched other than minimum documentation to the extent that such documents are included in the fields searched
CPC - G06F 17/00; G09B 25/00; H04N 5/222; 7/15 (2014.09) (keyword delimited)

Electronic data base consulted during the international search (name of data base and, where practicable, search terms used)

Google, Orbit, Google Patents
Search terms used: camera, detect, user presence, switching, idle mode, mirror mode

C. DOCUMENTS CONSIDERED TO BE RELEVANT

Category*	Citation of document, with indication, where appropriate, of the relevant passages	Relevant to claim No.
Y	US 2008/0151092 A1 (VILCOVSKY) 26 June 2008 (26.06.2008) entire document	1-20
Y	US 2007/0040033 A1 (ROSENBERG) 22 February 2007 (22.02.2007) entire document	1-20
Y	US 2010/0169411 A1 (COLTON et al) 01 July 2010 (01.07.2010) entire document	1-20
Y	US 2006/0158534 A1 (GOTOHDA) 20 July 2006 (20.07.2006) entire document	2,3
Y	US 2003/0146901 A1 (RYAN) 07 August 2003 (07.08.2003) entire document	3,17-20
Y	US 8,000,727 B1 (BUSHMAN et al) 16 August 2011 (16.08.2011) entire document	4,5
Y	US 2012/0233089 A1 (CALMAN et al) 13 September 2012 (13.09.2012) entire document	5
Y	US 2003/0110099 A1 (TRAJKOVIC et al) 12 June 2003 (12.06.2003) entire document	6-15
Y	US 2012/0154872 A1 (REDDY) 21 June 2012 (21.06.2012) entire document	8-11
Y	US 20130/083015 A1 (HERNANDEZ ESTEBAN) 04 April 2013 (04.04.2013) entire document	15
Y	US 2012/0229637 A1 (MOORADIAN et al) 13 September 2012 (13.09.2012) entire document	16
Y	US 2013/0088562 A1 (HONG et al) 11 April 2013 (11.04.2013) entire document	18-20
Y	US 6,366,694 B1 (ACHARYA) 02 April 2002 (02.04.2002) entire document	8-11

☒ Further documents are listed in the continuation of Box C. ☐

* Special categories of cited documents:
"A" document defining the general state of the art which is not considered to be of particular relevance
"E" earlier application or patent but published on or after the international filing date
"L" document which may throw doubts on priority claim(s) or which is cited to establish the publication date of another citation or other special reason (as specified)
"O" document referring to an oral disclosure, use, exhibition or other means
"P" document published prior to the international filing date but later than the priority date claimed
"T" later document published after the international filing date or priority date and not in conflict with the application but cited to understand the principle or theory underlying the invention
"X" document of particular relevance; the claimed invention cannot be considered novel or cannot be considered to involve an inventive step when the document is taken alone
"Y" document of particular relevance; the claimed invention cannot be considered to involve an inventive step when the document is combined with one or more other such documents, such combination being obvious to a person skilled in the art
"&" document member of the same patent family

Date of the actual completion of the international search	Date of mailing of the international search report
08 December 2014	17 DEC 2014
Name and mailing address of the ISA/US Mail Stop PCT, Attn: ISA/US, Commissioner for Patents P.O. Box 1450, Alexandria, Virginia 22313-1450 Facsimile No. 571-273-3201	Authorized officer: Blaine R. Copenheaver PCT Helpdesk: 571-272-4300 PCT OSP: 571-272-7774

Form PCT/ISA/210 (second sheet) (July 2009)

INTERNATIONAL SEARCH REPORT

International application No.
PCT/US2014/034333

C (Continuation). DOCUMENTS CONSIDERED TO BE RELEVANT

Category*	Citation of document, with indication, where appropriate, of the relevant passages	Relevant to claim No.
Y	US 2008/0056564 A1 (LINDBLOOM) 06 March 2008 (06.03.2008) entire document	8-11
Y	US 5,9237,76 A (KAMGAR-PARSI) 13 July 1999 (13.07.1999) entire document	10
Y	US 6,195,467 B1 (ASIMOPOULOS et al) 27 February 2001 (27.02.2001) entire document	11
Y	US 5,937,081 A (O'Brill et al) 10 August 1999 (10.08.1999) entire document	19
Y	US 2002/0049546 A1 (SHIMOMURA) 25 April 2002 (25.04.2002) entire document	20
Y	US 5,230,039 A (GROSSMAN et al) 20 July 1993 (20.07.1993) entire document	11
A	US 2012/0120184 A1 (FORNELL et al) 17 May 2012 (17.05.2012) entire document	1-20

Form PCT/ISA/210 (continuation of second sheet) (July 2009)

INTERNATIONAL SEARCH REPORT

International application No.
PCT/US2014/034333

Continuation of Box No. III:

This application contains the following inventions or groups of inventions which are not so linked as to form a single general inventive concept under PCT Rule 13.1. In order for all inventions to be examined, the appropriate additional examination fees must be paid.

Group I, claims 1-20, drawn to a computer implemented method for operating a system comprising determining whether the user has an existing account.
Group II, claims 21-31, drawn to a computer readable storage medium storing a program for separating an object in a digital image.
Group III, claims 32-47, drawn to a computer system for perform color change on an object within a digital image.
Group IV, claims 48-56, drawn to a method for operating a mirror-display system where the processor flips the captured images about a vertical axis.
Group V, claims 57-74, drawn to a method for displaying a mirror-mimicking image on the monitor comprising initiating a mirror-mimicking mode and authentication process.
Group VI, claims 75-94, drawn to a method for operating a mirror-display system comprising operating in a mirror tracking mode by operating the processor to apply adaptive transformation mapping to images.

The inventions listed as Groups I-VI do not relate to a single general inventive concept under PCT Rule 13.1 because, under PCT Rule 13.2, they lack the same or corresponding special technical features for the following reasons: the special technical feature of the Group I invention: determining whether the user has an existing account and, if so, opening the user account and displaying thumbnails corresponding to the user account on the monitor; if the user has no existing account, setting a temporary account and so long as the user is still in front of the monitor, enabling the user to control the temporary account as claimed therein is not present in the invention of Groups II-VI. The special technical feature of the Group II invention: instructions for separating an object in a digital image by performing the steps comprising: obtaining a digital image; receiving a selection of an object within the digital image as claimed therein is not present in the invention of Groups I, III-VI. The special technical feature of the Group III invention: perform color change on an object within a digital image, comprising receiving a selection of object in the digital image to be recolored; performing element selection to obtain collection of pixels that belong to the selected object as claimed therein is not present in the invention of Groups I, II, IV-VI. The special technical feature of the Group IV invention: the processor flips the captured images about a vertical axis so as to reverse right and left sides of the captured images and applies transformation mapping to the captured images to generate modified images that appear to mimic reflection of a mirror as claimed therein is not present in the invention of Groups I, II, III or V-VI. The special technical feature of the Group V invention: initiating a mirror-mimicking mode for displaying the mirror-mimicking image on the monitor; initiating an authentication process as claimed therein is not present in the invention of Groups I-IV, VI. The special technical feature of the Group VI invention: operating the mirror-display system in a mirror tracking mode by operating the processor to apply adaptive transformation mapping to images captured by the camera to generate modified images that appear to be captured from a different point of view of the camera's actual point of view as claimed therein is not present in the invention of Groups I-V.

Groups I, II, III, IV, V and VI lack unity of invention because even though the inventions of these groups require the technical feature of a method for operating a mirror-display system having a monitor camera and processor, operating the system in idle mode until a user presence is sensed in front of camera, once user presence identified, switching operation of mirror display into a different mode, this technical feature is not a special technical feature as it does not make a contribution over the prior art. Specifically, US 2008/0151092 A1 (VILCOVSKY) 26 June 2008 (26.06.2008) teaches a method for operating a mirror-display system having a monitor camera and processor (method for enabling a system to carry out an appearance comparison, wherein the system comprises a mirror display device, an imaging device to capture one or more appearances from a field of view in front of the mirror-display device, and central processor, Paras. 6 and 44), operating the system in idle mode until a user presence is sensed in front of camera, once user presence identified, switching operation of mirror display into a different mode (controller 121 receives input from imaging device 130 related to capturing a first trial of the user-appearance in front of imaging device 130, Para. 61 and Fig. 3A; at this point, controller 121 may view the first trial and then change the operational mode of mirror-display device 140 to the display mode using signals 141, wherein controller 121 further facilitates switching the mirror-display device from inactive to active mode, Paras. 31 and 62 and Fig. 3B).

Since none of the special technical features of the Group I, II, III, IV, V or VI inventions are found in more than one of the inventions, unity of invention is lacking.

PATENT COOPERATION TREATY

From the
INTERNATIONAL SEARCHING AUTHORITY

To: JOSEPH BACH
NIXON PEABODY LLP
P.O. BOX 60610
PALO ALTO, CA 94306

PCT

WRITTEN OPINION OF THE
INTERNATIONAL SEARCHING AUTHORITY

(PCT Rule 43*bis*.1)

Date of mailing *(day/month/year)* 17 DEC 2014

Applicant's or agent's file reference	FOR FURTHER ACTION
067055-002101	See paragraph 2 below

International application No.	International filing date *(day/month/year)*	Priority date *(day/month/year)*
PCT/US2014/034333	16 April 2014	04 August 2013

International Patent Classification (IPC) or both national classification and IPC
IPC(8) - G06F 17/00 (2014.01)
USPC - G06F 17/00

Applicant EYESMATCH LTD

1. This opinion contains indications relating to the following items:

- [x] Box No. I Basis of the opinion
- [ ] Box No. II Priority
- [ ] Box No. III Non-establishment of opinion with regard to novelty, inventive step and industrial applicability
- [x] Box No. IV Lack of unity of invention
- [x] Box No. V Reasoned statement under Rule 43*bis*.1(a)(i) with regard to novelty, inventive step or industrial applicability; citations and explanations supporting such statement
- [ ] Box No. VI Certain documents cited
- [ ] Box No. VII Certain defects in the international application
- [ ] Box No. VIII Certain observations on the international application

2. **FURTHER ACTION**

If a demand for international preliminary examination is made, this opinion will be considered to be a written opinion of the International Preliminary Examining Authority ("IPEA") except that this does not apply where the applicant chooses an Authority other than this one to be the IPEA and the chosen IPEA has notified the International Bureau under Rule 66.1*bis*(b) that written opinions of this International Searching Authority will not be so considered.

If this opinion is, as provided above, considered to be a written opinion of the IPEA, the applicant is invited to submit to the IPEA a written reply together, where appropriate, with amendments, before the expiration of 3 months from the date of mailing of Form PCT/ISA/220 or before the expiration of 22 months from the priority date, whichever expires later.

For further options, see Form PCT/ISA/220.

Name and mailing address of the ISA/US	Date of completion of this opinion	Authorized officer:
Mail Stop PCT, Attn: ISA/US Commissioner for Patents P.O. Box 1450, Alexandria, Virginia 22313-1450 Facsimile No. 571-273-3201	08 December 2014	Blaine R. Copenheaver PCT Helpdesk: 571-272-4300 PCT OSP: 571-272-7774

Form PCT/ISA/237 (cover sheet) (July 2011)

WRITTEN OPINION OF THE INTERNATIONAL SEARCHING AUTHORITY

International application No.
PCT/US2014/034333

Box No. I Basis of this opinion

1. With regard to the **language**, this opinion has been established on the basis of:

   ☒ the international application in the language in which it was filed.

   ☐ a translation of the international application into _____ which is the language of a translation furnished for the purposes of international search (Rules 12.3(a) and 23.1(b)).

2. ☐ This opinion has been established taking into account the **rectification of an obvious mistake** authorized by or notified to this Authority under Rule 91 (Rule 43*bis*.1(a))

3. With regard to any **nucleotide and/or amino acid sequence** disclosed in the international application, this opinion has been established on the basis of a sequence listing filed or furnished:

   a. (means)

   ☐ on paper

   ☐ in electronic form

   b. (time)

   ☐ in the international application as filed

   ☐ together with the international application in electronic form

   ☐ subsequently to this Authority for the purposes of search

4. ☐ In addition, in the case that more than one version or copy of a sequence listing has been filed or furnished, the required statements that the information in the subsequent or additional copies is identical to that in the application as filed or does not go beyond the application as filed, as appropriate, were furnished.

5. Additional comments:

WRITTEN OPINION OF THE INTERNATIONAL SEARCHING AUTHORITY

International application No.
PCT/US2014/034333

Box No. IV Lack of unity of invention

1. ☒ In response to the invitation (Form PCT/ISA/206) to pay additional fees the applicant has, within the appicable time limit:

   ☐ paid additional fees

   ☐ paid additional fees under protest and, where applicable, the protest fee

   ☐ paid additional fees under protest but the applicable protest fee was not paid

   ☐ not paid additional fees

2. ☐ This Authority found that the requirement of unity of invention is not complied with and chose not to invite the applicant to pay additional fees.

3. This Authority considers that the requirement of unity of invention in accordance with Rule 13.1, 13.2 and 13.3 is

   ☐ complied with

   ☒ not complied with for the following reasons:

See Supplemental Box

4. Consequently, this opinion has been established in respect of the following parts of the international application:

   ☐ all parts

   ☒ the parts relating to claims Nos. 1-20

Form PCT/ISA/237 (Box No. IV) (July 2011)

WRITTEN OPINION OF THE INTERNATIONAL SEARCHING AUTHORITY

International application No.
PCT/US2014/034333

Box No. V **Reasoned statement under Rule 43*bis*.1(a)(i) with regard to novelty, inventive step or industrial applicability; citations and explanations supporting such statement**

1. Statement

Novelty (N)	Claims	1-20	YES
	Claims	None	NO
Inventive step (IS)	Claims	None	YES
	Claims	1-20	NO
Industrial applicability (IA)	Claims	1-20	YES
	Claims	None	NO

2. Citations and explanations:

Claim 1 lacks an inventive step under PCT Article 33(3) as being obvious over Vilcovsky in view of Rosenberg and further in view of Colton et al., hereinafter referred to as Colton.

Regarding claim 1, Vilcovsky discloses a computer implemented method for operating a system having a monitor, a camera, and a processor, so as to display a user's image on the monitor (a device, a method, a system for capturing and displaying appearances, abstract, title; fig.1 shows an interactive system 100 which comprises of an imaging device 130 which is a camera, a mirror-display device 140, para 0027, 0034; the mirror display device 140 operates selectably as a mirror or a display and operates in a display mode wherein the device enables the user to view user appearances as captured by the imaging device of a previous trial, para 0025), comprising: on a device having the processor and a memory storing a program for execution by the processor (the controller 121 includes a central processing unit, a digital signal processor, a microprocessor, para 0044; the controller 121 generates a mirror-image corresponding to the appearance captured by imaging device 130, a storage 123 stores instructions that when executed by a controller using an algorithm, para 0048), the program including instructions for: operating the system in a mode (the mirror-display device 140 is a LCD embedded in a semi-reflective mirror, wherein in an inactive mode of operation, a mirror-display 140 reflects sufficient light incident to enable the user to view user-appearances, para 0031); switching the system to virtual mirror mode wherein the system performs the steps comprising (the user sets the operating mode of a mirror device to a mirror mode and poses in front of the mirror-display device and captures an image of the user appearance of the first trial, and the device 130 captures the user-appearance, para 0064-0066; the user switches between operating modes mirror-mode and display mode, para 0068; the mirror-display device 140 when switched to an active mode of operation, images displayed by the LCD device is viewed by user 11, para 0031): transforming the images captured by the camera to generate mirror images (an imaging device captures the user appearances and displays it on the mirror-display device to view a user-appearance of a current trial, para 0025; the mirror-display device 140 operates in the mirror-mode wherein the user can view a user-appearance, wherein the imaging device 130 captures an image of the user-appearance of the first trial of a consumer article [displaying images of the user on the device 140 via the camera 130 is interpreted as transforming images], para 0029); storing the mirror images (wherein the imaging device 130 captures an image of the user-appearance of the first trial of a consumer article, and stores the captured image in a storage device 123, para 0029); displaying the mirror images on the monitor (imaging device captures the user appearances and displays it on the mirror-display device to view a user-appearance of a current trial, para 0025), but lacks the teaching of operating the system in an idle mode wherein images captured by the camera are buffered for display on the monitor, but are not stored; when a presence of a user is detected in a field of view of the camera, switching the system to virtual mirror mode; and, determining whether the user has an existing account and, if so, opening the user account and displaying thumbnails corresponding to the user account on the monitor; if the user has no existing account, setting a temporary account and so long as the user is still in front of the monitor, enabling the user to control the temporary account; and, once the user exits the field of view, returning the system to idle mode.

(Cont. in Supplemental Box)

WRITTEN OPINION OF THE INTERNATIONAL SEARCHING AUTHORITY

International application No.
PCT/US2014/034333

Supplemental Box

In case **the space in any of the preceding boxes is not sufficient.**
Continuation of:
Continuation Box No. IV:

This application contains the following inventions or groups of inventions which are not so linked as to form a single general inventive concept under PCT Rule 13.1. In order for all inventions to be examined, the appropriate additional examination fees must be paid.

Group I, claims 1-20, drawn to a computer implemented method for operating a system comprising determining whether the user has an existing account.
Group II, claims 21-31, drawn to a computer readable storage medium storing a program for separating an object in a digital image.
Group III, claims 32-47, drawn to a computer system for perform color change on an object within a digital image.
Group IV, claims 48-56, drawn to a method for operating a mirror-display system where the processor flips the captured images about a vertical axis.
Group V, claims 57-74, drawn to a method for displaying a mirror-mimicking image on the monitor comprising initiating a mirror-mimicking mode and authentication process.
Group VI, claims 75-94, drawn to a method for operating a mirror-display system comprising operating in a mirror tracking mode by operating the processor to apply adaptive transformation mapping to images.

The inventions listed as Groups I-VI do not relate to a single general inventive concept under PCT Rule 13.1 because, under PCT Rule 13.2, they lack the same or corresponding special technical features for the following reasons: the special technical feature of the Group I invention: determining whether the user has an existing account and, if so, opening the user account and displaying thumbnails corresponding to the user account on the monitor; if the user has no existing account, setting a temporary account and so long as the user is still in front of the monitor, enabling the user to control the temporary account as claimed therein is not present in the invention of Groups II-VI. The special technical feature of the Group II invention: instructions for separating an object in a digital image by performing the steps comprising: obtaining a digital image; receiving a selection of an object within the digital image as claimed therein is not present in the invention of Groups I, III-VI. The special technical feature of the Group III invention: perform color change on an object within a digital image, comprising receiving a selection of object in the digital image to be recolored; performing element selection to obtain collection of pixels that belong to the selected object as claimed therein is not present in the invention of Groups I, II, IV-VI. The special technical feature of the Group IV invention: the processor flips the captured images about a vertical axis so as to reverse right and left sides of the captured images and applies transformation mapping to the captured images to generate modified images that appear to mimic reflection of a mirror as claimed therein is not present in the invention of Groups I, II, III or V-VI. The special technical feature of the Group V invention: initiating a mirror-mimicking mode for displaying the mirror-mimicking image on the monitor; initiating an authentication process as claimed therein is not present in the invention of Groups I-IV, VI. The special technical feature of the Group VI invention: operating the mirror-display system in a mirror tracking mode by operating the processor to apply adaptive transformation mapping to images captured by the camera to generate modified images that appear to be captured from a different point of view of the camera's actual point of view as claimed therein is not present in the invention of Groups I-V.

Groups I, II, III, IV, V and VI lack unity of invention because even though the inventions of these groups require the technical feature of a method for operating a mirror-display system having a monitor camera and processor, operating the system in idle mode until a user presence is sensed in front of camera, once user presence identified, switching operation of mirror display into a different mode, this technical feature is not a special technical feature as it does not make a contribution over the prior art. Specifically, US 2008/0151092 A1 (VILCOVSKY) 26 June 2008 (26.06.2008) teaches a method for operating a mirror-display system having a monitor camera and processor (method for enabling a system to carry out an appearance comparison, wherein the system comprises a mirror display device, an imaging device to capture one or more appearances from a field of view in front of the mirror-display device; and central processor, Paras. 6 and 44); operating the system in idle mode until a user presence is sensed in front of camera, once user presence identified, switching operation of mirror display into a different mode (controller 121 receives input from imaging device 130 related to capturing a first trial of the user-appearance in front of imaging device 130, Para. 61 and Fig. 3A; at this point, controller 121 may view the first trial and then change the operational mode of mirror-display device 140 to the display mode using signals 141, wherein controller 121 further facilitates switching the mirror-display device from inactive to active mode, Paras. 31 and 62 and Fig. 3B).

Since none of the special technical features of the Group I, II, III, IV, V or VI inventions are found in more than one of the inventions, unity of invention is lacking.

WRITTEN OPINION OF THE INTERNATIONAL SEARCHING AUTHORITY

International application No.
PCT/US2014/034333

Supplemental Box

In case the space in any of the preceding boxes is not sufficient.
Continuation of:
Regarding claim 1 (Cont.):

Rosenberg is in the field of a digital mirror system that emulates a traditional mirror by displaying real-time video imagery of a user (abstract) and teaches operating the system in an idle mode (when the sensors detect that person has moved away from the screen is enabled to switch into a low-power idle state so that the display 301 is not wasting power by continually displaying mirroring imagery, para 0069); when a presence of a user is detected in a field of view of the camera, switching the system to virtual mirror mode (fig.3 shows proximity and motion sensors 305 for detecting whether a person is located before and when the person moves away from the display screen, the auto-activation feature is enabled by the proximity and motion sensors to send data to a processor indicating that an object is within a defined region and causes the mirror display 301 to automatically turn on upon the detection and to enter it a mirroring mode from a power off mode, para 0069); once the user exits the field of view, returning the system to idle mode (the digital mirror functions in selectively switching between plurality of states in response to a person stepping before and stepping away from the display screen, further when the sensors detect that person has moved away from the screen is enabled to switch into a low-power idle state so that the display 301 is not wasting power by continually displaying mirroring imagery, para 0069, 0070). It would have been obvious to one of ordinary skill in the art at the time of the invention to use the teachings of Rosenberg to incorporate operating the system in an idle mode; when a presence of a user is detected in a field of view of the camera, switching the system to virtual mirror mode; once the user exits the field of view, returning the system to idle mode into the invention of Vilcovsky. The motivation would have been to conserve power when no one is utilizing the mirror (see Rosenberg para 0069).
Furthrmore, Rosenberg teaches, wherein images captured by the camera are buffered for display on the monitor, but are not stored (the mirror-image buffering feature is configured to continually store in a buffer memory 1000 frames captured and displayed to the user, and as new frames come in, old frames are over-written, the image frame buffer maintains in memory the last 10 seconds of live imagery captured, para 0044) and setting a displaying so long as the user is still in front of the monitor (the auto-shut-down feature provides mirroring display screen to be turned off when it is determined that a user has stepped away from the mirror for more than some threshold amount of time and wherein sufficient motion was not detected before the screen for a period of time [turning of the display when the user is not detected is interpreted as displaying so long as the user is still in front of the monitor], para 0070).Therefore, It would have been obvious to one of ordinary skill in the art at the time of the invention to use the teachings of Rosenberg to incorporate wherein images captured by the camera are buffered for display on the monitor, but are not stored and setting a displaying so long as the user is still in front of the monitor into the invention of Vilcovsky. The motivation would have been to conserve power when no one is utilizing the mirror (see Rosenberg para 0069).
Colton is the field of sharing content among a plurality of users and enables the transfer of electronic content items captured (abstract) and teaches determining whether the user has an existing account and, if so, accessing the user account (fig.3 shows step 368 wherein the server 22 checks to determine if the identified recipient already has an account with the system, at step 372 it is determined that an account does exist then a content transfer takes place, para 0107); if the user has no existing account, setting a temporary account and, enabling the user to control the temporary account (fig.9 shows if the server determines that the recipient is not an account holder, a temporary account for that recipient is created in step 380, and the temporary account is utilized as a placeholder for the message generated by the sending user, para 0110). It would have been obvious to one of ordinary skill in the art at the time of the invention to use the teachings of Colton to incorporate determining whether the user has an existing account and, if so, accessing the user account; if the user has no existing account, setting a temporary account and, enabling the user to control the temporary account into the invention of Vilcovsky. The motivation would have been to provide almost very little effort to download, install and use an appropriate software for sending and receiving content (see Colton para 0028).
Furthermore, Colton teaches open an account and displaying thumbnails corresponding to the user account on the monitor (fig.10 shows a GUI [monitor] that displays a message that a recipient has received, and the display area 454 include attachments associated with the message in area 454C [displaying thumbnails], para 0127, 0129, 0130; a content sharing application is an email application [email message is viewed interpreted as open an account], para 0133). Therefore, It would have been obvious to one of ordinary skill in the art at the time of the invention to use the teachings of Colton to incorporate teaches open an account and displaying thumbnails corresponding to the user account on the monitor into the invention of Vilcovsky. The motivation would have been to provide the users with ease of access to contents independent of registering for an account.

Claim 2 lacks an inventive step under PCT Article 33(3) as being obvious over Vilcovsky in view of Rosenberg and further in view of Colton and further in view Gothda.

Regarding claim 2, Vilcovsky lacks the teaching of wherein when the presence of the user is detected, the system further performs the step comprising calculating the height of the user.
Rosenberg is in the field of a digital mirror system that emulates a traditional mirror by displaying real-time video imagery of a user (abstract) and teaches wherein when the presence of the user is detected (when the sensors detect that person has moved away from the screen is enabled to switch into a low-power idle state so that the display 301 is not wasting power by continually displaying mirroring imagery, para 0069). It would have been obvious to one of ordinary skill in the art at the time of the invention to use the teachings of Rosenberg to incorporate wherein when the presence of the user is detected into the invention of Vilcovsky. The motivation would have been to conserve power when no one is utilizing the mirror (see Rosenberg para 0069).
Gotohda is in the field of capturing an image to provide a desirable composition to the user (abstract) and teaches the system further performs the step comprising calculating the height of the user (the facial position of the user is calculated in the captured image, the facial storage section stores the calculated facial position, and determines the user's height based on a user's facial position calculated, para 0085). It would have been obvious to one of ordinary skill in the art at the time of the invention to use the teachings of Gotohda to incorporate the system further performs the step comprising calculating the height of the user into the invention of Vilcovsky. The motivation would have been to provide an optimized and speedy process of determining a person's facial image (see Gotohda para 0085).

WRITTEN OPINION OF THE INTERNATIONAL SEARCHING AUTHORITY

International application No.
PCT/US2014/034333

Supplemental Box

In case **the space in any of the preceding boxes is not sufficient.**
Continuation of:

Claim 3 lacks an inventive step under PCT Article 33(3) as being obvious over Vilcovsky in view of Rosenberg and further in view of Colton and further in view Gothda and further in view of Ryan.

Regarding claim 3, Vilcovsky lacks the teaching of wherein calculating the height comprises: identifying user's eyes in a frame of the images captured by the camera to identify the user's head; registering an oval around the user's head; matching at least one pixel at top section of the oval to a height calibration, to thereby deduce the user's height.
Gotohda is in the field of capturing an image to provide a desirable composition to the user (abstract) and teaches registering a location around the user's head (the facial position of the user is calculated in the captured image, the facial storage section stores the calculated facial position, and determines the user's height based on a user's facial position calculated, para 0085); matching at least one pixel at top section of the location to a height calibration, to thereby deduce the user's height (the facial position of the user is calculated in the captured image, the facial storage section stores the calculated facial position, and determines the user's height based on a user's facial position calculated, para 0085). Furthermore, to define the shape of the position located was a well-known practice in the art and the specifics (an oval shape) would have been a matter of design choice. It would have been obvious to one of ordinary skill in the art at the time of the invention to use the teachings of Gotohda to incorporate registering an oval around the user's head; matching at least one pixel at top section of the oval to a height calibration, to thereby deduce the user's height into the invention of Vilcovsky. The motivation would have been to provide an optimized and speedy process of determining a person's facial image (see Gotohda para 0085).
Ryan is in the field of computer processing apparatus wherein frames of image data received from a camera are processed to track the eyes of a user (abstract) and teaches identifying user's eyes in a frame of the images captured by the camera to identify the user's head (eye position calculator identifies two minima's in each group that are associated with y-positions of the user's eyebrow and eye, para 0106; the head model processor 34 performs processing to determine a rotation of the 3D computer head model, the three dimensional coordinate system orientates the head so that the eyes project the same positions in the 2D image space as the calculated eye position, para 0139). It would have been obvious to one of ordinary skill in the art at the time of the invention to use the teachings of Ryan to incorporate identifying user's eyes in a frame of the images captured by the camera to identify the user's head into the invention of Vilcovsky. The motivation would have been to provide an accurate and reliable way of determining locations (see Ryan para 0034).

Claim 4 lacks an inventive step under PCT Article 33(3) as being obvious over Vilcovsky in view of Rosenberg and further in view of Colton and further in view Bushman et al., hereinafter referred to as Bushman.

Regarding claim 4, Vilcovsky lacks the teaching of wherein when a presence of a user is detected, the method further proceed to execute a user authentication procedure.
Bushman is in the field of a communication system wherein a device optically receives an image and process it (abstract) and teaches proceed to execute a user authentication procedure (to process the access code to authenticate the user and indicate the authentication in the authorization request, claim 15, col.6, lines 16-43). It would have been obvious to one of ordinary skill in the art at the time of the invention to use the teachings of Bushman to incorporate proceed to execute a user authentication procedure into the invention of Vilcovsky. The motivation would have been to provide an optimized process of authentication.

Claim 5 lacks an inventive step under PCT Article 33(3) as being obvious over Vilcovsky in view of Rosenberg and further in view of Colton and further in view of Bushman and further in view of Calman et al., hereinafter referred to as Calman.

Regarding claim 5, Vilcovsky lacks the teaching of wherein the user authentication procedure comprises the steps: displaying a frame in a background area of the monitor; continuously analyzing the images captured by camera for presence of a code within the frame; and, when a code is detected, analyzing the code to authenticate the user.
Calman is in the field of presenting investment related information on a mobile device by using object recognition techniques (abstract) and teaches displaying a frame in a background area of the monitor (the AR application continuously captures video and analyzes the objects within the video stream, and an object recognition application alerts the user that a particular object has been identified, para 0055; the apparatus 100 includes a business entity identification application that identifies business entities based on the images captured in the video stream, by using images of products manufactured by the business entity, wherein the tags displayed in the products include a readable code such as a QR code, wherein the application decodes the QR code to identify he business entity associated, para 0066); continuously analyzing the images captured by camera for presence of a code within the frame (the AR application continuously captures video and analyzes the objects within the video stream, and an object recognition application alerts the user that a particular object has been identified, para 0055; the apparatus 100 includes a business entity identification application that identifies business entities based on the images captured in the video stream, by using images of products manufactured by the business entity, wherein the tags displayed in the products include a readable code such as a QR code, wherein the application decodes the QR code to identify he business entity associated, para 0066); and, when a code is detected, analyzing the code (the AR application continuously captures video and analyzes the objects within the video stream, and an object recognition application alerts the user that a particular object has been identified, para 0055; the apparatus 100 includes a business entity identification application that identifies business entities based on the images captured in the video stream, by using images of products manufactured by the business entity, wherein the tags displayed in the products include a readable code such as a QR code, wherein the application decodes the QR code to identify he business entity associated, para 0066). It would have been obvious to one of ordinary skill in the art at the time of the invention to use the teachings of Calman to incorporate displaying a frame in a background area of the monitor; continuously analyzing the images captured by camera for presence of a code within the frame; and, when a code is detected, analyzing the code into the invention of Vilcovsky. The motivation would have been to provide an optimized process of identifying products.
Bushman is in the field of a communication system wherein a device optically receives an image and process it (abstract) and teaches analyzing the code to authenticate the user (to process the access code to authenticate the user and indicate the authentication in the authorization request, claim 15, col.6, lines 16-43). It would have been obvious to one of ordinary skill in the art at the time of the invention to use the teachings of Bushman to incorporate analyzing the code to authenticate the user into the invention of Vilcovsky. The motivation would have been to provide an optimized process of authentication.

WRITTEN OPINION OF THE INTERNATIONAL SEARCHING AUTHORITY

International application No.
PCT/US2014/034333

Supplemental Box

In case **the space in any of the preceding boxes is not sufficient.**
Continuation of:

Claims 6, 7, 12-14 lack an inventive step under PCT Article 33(3) as being obvious over Vilcovsky in view of Rosenberg and further in view of Colton and further in view of Trajkovic et al., hereinafter referred to as Trajkovic.

Regarding claim 6, Vilcovsky lacks the teaching of further comprising: when a presence of a user is detected, analyzing clothing articles worn by the user to determine whether corresponding articles are stored in a database accessible by the processor and, if so, enabling the user to specify a selected article from the clothing articles worn by the user and displaying on the monitor colors available for the selected article.
Trajkovic is in the field of virtual clothes modeling includes a unit for obtaining a virtual image (abstract) and teaches analyzing clothing articles worn by the user to determine whether corresponding articles are stored in a database accessible by the processor (fig.2 shows a step 205 wherein an image is obtained of a shopper, at step 210 an identifying token is read from the image, and at step 215 an image information regarding the article is retrieved from a database, and the images are scanned and stored in a database, and categorized information of the article is retrieved, para 035-0040) and, if so, enabling the user to specify a selected article from the clothing articles worn by the user and displaying on the monitor colors available for the selected article (a virtual image is displayed which is a composite image of the person shopping and the image of the article of clothing which is a three dimensional image, further the display prompts the shopper with variations of the article of clothing and the user can browse through and see oneself wearing the different variations of a particular article, para 0040-0042; fig.3 shows a prompt for the user to select additional articles of clothing retrieved with the first article of clothing, when a retrieved article is a red dress the same dress in white or blue cab be retrieved, para 0043). It would have been obvious to one of ordinary skill in the art at the time of the invention to use the teachings of Trajkovic to incorporate analyzing clothing articles worn by the user to determine whether corresponding articles are stored in a database accessible by the processor and, if so, enabling the user to specify a selected article from the clothing articles worn by the user and displaying on the monitor colors available for the selected article into the invention of Vilcovsky. The motivation would have been to provide the users with an optimized shopping experience.

Regarding claim 7, Vilcovsky lacks the teaching of further comprising: when the user selects specified color of the colors available for the selected article, modifying the mirror image to render the selected article with the specified color.
Trajkovic is in the field of virtual clothes modeling includes a unit for obtaining a virtual image (abstract) and teaches when the user selects specified color of the colors available for the selected article, modifying the mirror image to render the selected article with the specified color (a virtual image is displayed which is a composite image of the person shopping and the image of the article of clothing which is a three dimensional image, further the display prompts the shopper with variations of the article of clothing and the user can browse through and see oneself wearing the different variations of a particular article, para 0040-0042; when the shopper selects a different article, the retrieval means create a new combined image of the shopper with a second subsequently selected article of clothing, para 0032, 0034; fig.3 shows a prompt for the user to select additional articles of clothing retrieved with the first article of clothing, when a retrieved article is a red dress the same dress in white or blue cab be retrieved, para 0043). It would have been obvious to one of ordinary skill in the art at the time of the invention to use the teachings of Trajkovic to incorporate when the user selects specified color of the colors available for the selected article, modifying the mirror image to render the selected article with the specified color into the invention of Vilcovsky. The motivation would have been to provide the users with an optimized shopping experience.

Regarding claim 12, Vilcovsky lacks the teaching of wherein specify a selected article comprises at least one from the group consisting of: the user manually touching the actual article on the user's body, the user selecting a name of the article from a menu, the user saying the name of the article and the system recognizing the user's saying with a voice recognition system, and a preselection and automatic identification system configured to apply rules to the mirror image to select a predefined element matching the article within the mrrror Image.
Trajkovic is in the field of virtual clothes modeling includes a unit for obtaining a virtual image (abstract) and teaches the user selecting an article from a menu, (fig.3 shows providing a prompt on the display for a shopper to view a second article of clothing 230 and select additional articles of clothing, further fig.4 shows wherein the prompt has a browsing option for complimentary items 235, para 0042-0044). Furthermore, to establish a type of metadata associated with the displayed article was a well-known practice in the art and the specifics (a name) would have been a matter of design choice. It would have been obvious to one of ordinary skill in the art at the time of the invention to use the teachings of Trajkovic to incorporate the user selecting a name of the article from a menu into the invention of Vilcovsky. The motivation would have been to provide

Regarding claim 13, Vilcovsky lacks the teaching of wherein modifying the mirror image further comprises applying a mask to the mirror image to emulate a fabric, a texture, a reflection, an absorption, brightness, or tone over the selected article.
Trajkovic is in the field of virtual clothes modeling includes a unit for obtaining a virtual image (abstract) and teaches wherein modifying the mirror image further comprises applying a mask to the mirror image to emulate a fabric (when the shopper selects a different article, the retrieval means create a new combined image of the shopper with a second or subsequently selected article of clothing, wherein the composite image shows the shopper with a selected pants and different shirts, shoes, and the shopper views themselves with variations of the complimentary item, para 0032, 0034; a virtual masking of the image of the person with the article of clothing to produce a virtual image, para 0040). It would have been obvious to one of ordinary skill in the art at the time of the invention to use the teachings of Trajkovic to incorporate wherein modifying the mirror image further comprises applying a mask to the mirror image to emulate a fabric into the invention of Vilcovsky. The motivation would have been to provide the users with an optimized shopping experience.

Regarding claim 14, Vilcovsky lacks the teaching of wherein modifying the mirror Image further comprises applying at least one mask selected from a macro texture mask 48 introducing shading into the mirror image and micro texture mask introducing fabric texture into the mirror image.
Trajkovic is in the field of virtual clothes modeling includes a unit for obtaining a virtual image (abstract) and teaches a micro texture mask introducing fabric texture into the mirror image (when the shopper selects a different article, the retrieval means create a new combined image of the shopper with a second or subsequently selected article of clothing, wherein the composite image shows the shopper with a selected pants and different shirts, shoes, and the shopper views themselves with variations of the complimentary item, para 0032, 0034; a virtual masking of the image of the person with the article of clothing to produce a virtual image, para 0040). It would have been obvious to one of ordinary skill in the art at the time of the invention to use the teachings of Trajkovic to incorporate micro texture mask introducing fabric texture into the mirror image into the invention of Vilcovsky. The motivation would have been to provide the users with an optimized shopping experience.

WRITTEN OPINION OF THE INTERNATIONAL SEARCHING AUTHORITY

International application No.
PCT/US2014/034333

Supplemental Box

In case **the space in any of the preceding boxes is not sufficient.**
Continuation of:

Claims 8, 9, lack an inventive step under PCT Article 33(3) as being obvious over Vilcovsky in view of Rosenberg and further in view of Colton and further in view of Trajkovic and further in view of Reddy and further in view of Acharya and further in view of Lindbloom.

Regarding claim 8, Vilcovsky lacks the teaching of wherein modifying the mirror image comprises: identifying estimated geometry of the article; selecting a plurality of representative pixels within the estimated geometry; analyzing the representative pixels to obtain representative color; using the representative color to find all pixels belonging to the article; and, applying the specified color to each pixel belonging to the article.
Reddy is in the field of a digitized document formatted as an image file and representing a scanned original page (abstract) and teaches identifying estimated geometry of the article (a digitized document is received, the digitized document is formatted as an image file and represents a scanned original page with a page boundary, the image files includes a vector data (geometric data) displayed as pixels, para 0014); selecting a plurality of representative pixels within the estimated geometry (the height and width are extracted from the digitized document by counting the pixels, vertically and horizontally to determine the height and width of the digitized document, the lookup file 310 provides information 312 that the digitized document is in JPEG format and measures 3336×5010 pixels in size and identifies that image border 306 has a height 316 of 5010 pixels and a width 318 of 3366 pixels, para 0020, 0021). It would have been obvious to one of ordinary skill in the art at the time of the invention to use the teachings of Reddy to incorporate identifying estimated geometry of the article; selecting a plurality of representative pixels within the estimated geometry into the invention of Vilcovsky. The motivation would have been to reproduce an accurate replica of an original scanned page (see Reddy para 0010).
Acharya is in the field of an integrated color interpolation and color space conversion technique (abstract) and teaches analyzing the representative pixels to obtain representative color (when the RGB values are converted to a full resolution XYZ space, again the needed storage size would be M*N*24 bits (each pixel having 8-bit X, Y and Z values, to derive a technique to convert directly a 8-bit pixel to a full resolution XYZ color space, col.4, lines 61-67, col.5, lines 1-20). It would have been obvious to one of ordinary skill in the art at the time of the invention to use the teachings of Acharya to incorporate analyzing the representative pixels to obtain representative color into the invention of Vilcovsky. The motivation would have been to provide conversion in an integrated manner to reduce overall computational complexity and time (see col.1, lines 30-36).
Lindbloom is in the field of a computer program product for color selection in a color image (abstract) and teaches using the representative color to find all pixels belonging to the article (the peaks of a 3D image are identified and separated one from another to segregate and group the pixels belonging to a particular color, the extent of each shape is automatically determined by segmentation process, thereby eliminating any tolerance, para 0029); and, applying the specified color to each pixel belonging to the article (the peaks of a 3D image are identified and separated one from another to segregate and group the pixels belonging to a particular color, the extent of each shape is automatically determined by segmentation process, thereby eliminating any tolerance, the user clicks on an object, the color of the object selects its segment, para 0029). It would have been obvious to one of ordinary skill in the art at the time of the invention to use the teachings of Lindbloom to incorporate using the representative color to find all pixels belonging to the article; and, applying the specified color to each pixel belonging to the article into the invention of Vilcovsky. The motivation would have been to provide an optimized process of editing for more seamless integration (see Lindbloom para 0019).

Regarding claim 9, Vilcovsky lacks the teaching of wherein analyzing the representative pixels comprises transforming RGB values of each representative pixel to an XYZ color field.
Acharya is in the field of an integrated color interpolation and color space conversion technique (abstract) and teaches wherein analyzing the representative pixels comprises transforming RGB values of each representative pixel to an XYZ color field (when the RGB values are converted to a full resolution XYZ space, again the needed storage size would be M*N*24 bits (each pixel having 8-bit X, Y and Z values, to derive a technique to convert directly a 8-bit pixel to a full resolution XYZ color space, col.4, lines 61-67, col.5, lines 1-20). It would have been obvious to one of ordinary skill in the art at the time of the invention to use the teachings of Acharya to incorporate wherein analyzing the representative pixels comprises transforming RGB values of each representative pixel to an XYZ color field into the invention of Vilcovsky. The motivation would have been to provide conversion in an integrated manner to reduce overall computational complexity and time (see col.1, lines 30-36).

Claim 10 lacks an inventive step under PCT Article 33(3) as being obvious over Vilcovsky in view of Rosenberg and further in view of Colton and further in view of Trajkovic and further in view of Reddy and further in view of Acharya and further in view of Lindbloom and further in view of Kamgar-Parsi.

Regarding claim 10, Vilcovsky lacks the teaching of further comprising determining a distance of each representative pixel from an average color and, if the distance exceeds a threshold, excluding that pixel from determination of the representative color.
Lindbloom is in the field of a computer program product for color selection in a color image (abstract) and teaches using the representative color to find all pixels belonging to the article (the peaks of a 3D image are identified and separated one from another to segregate and group the pixels belonging to a particular color, the extent of each shape is automatically determined by segmentation process, thereby eliminating any tolerance, para 0029). It would have been obvious to one of ordinary skill in the art at the time of the invention to use the teachings of Lindbloom to incorporate using the representative color to find all pixels belonging to the article into the invention of Vilcovsky. The motivation would have been to provide an optimized process of editing for more seamless integration (see Lindbloom para 0019).
Kamgar-Parsi is in the field of extracting an object from an image which locates a pixel within the image (abstract) and teaches determining a distance of each representative pixel from a color and, if the distance exceeds a threshold, excluding that pixel (to performing a culling the distance of each bright pixel to the other one is calculated, and any such pixel distant from a selected number of bright pixels than a preset distance is excluded from the set of bright pixels, col.3, lines 55-65). Furthermore, to define an average color was a well-known practice in the art and the specifics would have been a matter of design choice. It would have been obvious to one of ordinary skill in the art at the time of the invention to use the teachings of Kamgar-Parsi to incorporate determining a distance of each representative pixel from an average color and, if the distance exceeds a threshold, excluding that pixel into the invention of Vilcovsky. The motivation would have been to provide an optimized process of pixel representation.

WRITTEN OPINION OF THE INTERNATIONAL SEARCHING AUTHORITY

International application No.
PCT/US2014/034333

Supplemental Box

In case **the space in any of the preceding boxes is not sufficient.**
Continuation of:

Claim 11 lacks an inventive step under PCT Article 33(3) as being obvious over Vilcovsky in view of Rosenberg and further in view of Colton and further in view of Trajkovic and further in view of Reddy and further in view of Acharya and further in view of Lindbloom and further in view of Asimopoulos et al., hereinafter referred to as Asimopoulos and further in view of Grossman.

Regarding claim 11, Vilcovsky lacks the teaching of further comprising: generating grey scale image of the mirror image; applying the grey scale image while applying the specified color to each pixel belonging to the article to thereby generate texture in the modified image.
Asimopoulos is in the field of generating grey scale image (equations for transforming color images into grayscale images, each pixel in a color image has intensities and an equivalent grayscale image is generated by applying transformation, col.4, lines 10-20); applying the grey scale image (equations for transforming color images into grayscale images, each pixel in a color image has intensities and an equivalent grayscale image is generated by applying transformation, the transformed grayscale image is applied with process 10 to sharpen the image, col.4, lines 10-20). It would have been obvious to one of ordinary skill in the art at the time of the invention to use the teachings of Asimopoulos to incorporate generating grey scale image of the mirror image; applying the grey scale image into the invention of Vilcovsky. The motivation would have been to provide an efficient process of image processing.
US 5230039 A
Grossman is in the field of a graphical display system and process for specifying and controlling a display range for texture mapping (abstract) and teaches while applying the specified color to each pixel belonging to the article to thereby generate texture in the modified image (texture mapping operates by applying color of a texture map to corresponding point elements (pixels) of an object on a display screen, col. 1, lines 31-41; also see col.4, lines 53-59). It would have been obvious to one of ordinary skill in the art at the time of the invention to use the teachings of Grossman to incorporate while applying the specified color to each pixel belonging to the article to thereby generate texture in the modified image into the invention of Vilcovsky. The motivation would have been to provide an enhanced texture mapped image.

Claim 15 lacks an inventive step under PCT Article 33(3) as being obvious over Vilcovsky in view of Rosenberg and further in view of Colton and further in view of Trajkovic and further in view of Hernandez and further in view of Esetban.

Regarding claim 15, Vilcovsky lacks the teaching of wherein applying at least one mask comprises generating a vector from all pixels of a mirror image frame and applying the mask to the vector.
Hernandez Esteban is in the field of rendering an image related to a target area (abstract) and teaches generating a vector from all pixels of a mirror image frame and applying the mask to the vector (a vector image data of the target area is received in block S302 and includes geometrically associated points and lines, para 0028; a mask for the vector image data is created and the mask is applied to the vector image data causes selections of the vector image data, para 0031). It would have been obvious to one of ordinary skill in the art at the time of the invention to use the teachings of Hernandez Esteban to incorporate generating a vector from all pixels of a mirror image frame and applying the mask to the vector into the invention of Vilcovsky. The motivation would have been to provide an improved process of image masking.

Claim 16 lacks an inventive step under PCT Article 33(3) as being obvious over Vilcovsky in view of Rosenberg and further in view of Colton and further in view of Mooradian et al., hereinafter referred to as Mooradian.

Regarding claim 16, Vilcovsky further teaches wherein transforming the images comprises: for each frame: flipping the image about a vertical axis so as to reverse right and left sides of the image (the imaging device 130 captures the user-appearance and stores the data and generates an image data representing reversed mirrored image of the image captured, and displays the reversed image, para 0048); applying a transformation mapping to the image to modify the image such that it appears to mimic a reflection of a mirror (the imaging device 130 captures the user-appearance and stores the data and generates an image data representing reversed mirrored image of the image captured, and displays the reversed image, para 0048), but lacks the teaching of resizing the image to reduce variations caused by changes in the user's distance to the camera.
Mooradian is in the field of detecting a camera wherein a camera takes multiple pictures and based on algorithm process it (abstract) and teaches resizing the image to reduce variations caused by changes in the user's distance to the camera (the images are resized when taken at a distance which is less than the minimum optical zoom distance, resizing is based on the distance ratio equal to the actual distance divided by the minimum optical zoom distance, and resizing serves to normalize features in the images for all distances, para 0090). It would have been obvious to one of ordinary skill in the art at the time of the invention to use the teachings of Mooradian to incorporate resizing the image to reduce variations caused by changes in the user's distance to the camera into the invention of Vilcovsky. The motivation would have been to provide an optimized process of identifying a pirate camera (see Mooradian para 0027).

Claim 17 lacks an inventive step under PCT Article 33(3) as being obvious over Vilcovsky in view of Rosenberg and further in view of Colton and further in view of Ryan.

Regarding claim 17, Vilcovsky lacks the teaching of further comprising analyzing each frame of the images from the camera to detect a symmetrical frame wherein the user's face appear symmetrical along a vertical line passing midway between the user's eyes.
Ryan is in the field of computer processing apparatus wherein frames of image data received from a camera are processed to track the eyes of a user (abstract) and teaches comprising analyzing each frame of the images from the camera to detect a symmetrical frame wherein the user's face appear symmetrical along a vertical line passing midway between the user's eyes (fig.1 shows images of user 2 are recorded by a camera 4 as he user changes their positions of their heads, the image data is recorded and processed to track the eyes of the user 2, by tracking the eyes of the user 2 through each frame of image data received from the camera 4, and generates a 3D head model to cover the eyes, para 0030, 0031, 0034; fig.5 shows a head symmetry line shown aby the y-axis, wherein on either side of the y-axis comprises a left group 60 of search bands 80 and a right group 70 of search bands 80 arranged , para 0062). It would have been obvious to one of ordinary skill in the art at the time of the invention to use the teachings of Ryan to incorporate comprising analyzing each frame of the images from the camera to detect a symmetrical frame wherein the user's face appear symmetrical along a vertical line passing midway between the user's eyes into the invention of Vilcovsky. The motivation would have been to provide an accurate and reliable way of determining locations (see Ryan para 0034).

WRITTEN OPINION OF THE
INTERNATIONAL SEARCHING AUTHORITY

International application No.
PCT/US2014/034333

Supplemental Box

In case **the space in any of the preceding boxes is not sufficient.**
Continuation of:

Claim 18 lacks an inventive step under PCT Article 33(3) as being obvious over Vilcovsky in view of Rosenberg and further in view of Colton and further in view of Ryan and further in view of Hong et al., hereinafter referred to as Hong.

Regarding claim 18, Vilcovsky lacks the teaching of further comprising removing the user's arms and hands from the image of the symmetrical frame to obtain a body-only image of the user.
Hong is in the field of a communication terminal that provides a silhouette function on a video screen (abstract) and teaches removing the user's eyes and nose from the image of the symmetrical frame to obtain a body-only image of the user (fig.3 shows silhouette processing a body image of a user in an input video source, wherein the processing unit 10 silhouette a body image 311 detected in an original video 310 by changing the clor within the body image 311 to a single color, and uses a silhouetted body image 321 as a final video to be transmitted, para 0035, 0036). Furthermore, to establish a particular body part to be removed was a well-known practice in the art and the specifics (user's arms and hands) would have been a matter of design choice. It would have been obvious to one of ordinary skill in the art at the time of the invention to use the teachings of Hong to incorporate removing the user's arms and hands from the image of the symmetrical frame to obtain a body-only image of the user into the invention of Vilcovsky. The motivation would have been to provide an image that can be used by third pay sources for various applications.

Claim 19 lacks an inventive step under PCT Article 33(3) as being obvious over Vilcovsky in view of Rosenberg and further in view of Colton and further in view of Ryan and further in view of Hong and further in view of O'Brill et al., hereinafter referred to as O'Brill.

Regarding claim 19, Vilcovsky lacks the teaching of further comprising correlating the body-only image to body types stored in a database to thereby estimate measurements of the user's body.
O'Brill is in the field of image composition system includes a device coupled to a central processing device (abstract) and teaches correlating the image to body types stored in a database to thereby estimate measurements of the user's body (the system facilitates the selection of pants image 210 and shirt image 310 corresponding to the body type of the person 12, wherein the appropriately sized images are selected corresponding to the body type, col.4, lines 55-64; a customer's body type is determined at box 616 to enable appropriate size of item images to be matched,col.5, lines 49-57). It would have been obvious to one of ordinary skill in the art at the time of the invention to use the teachings of O'Brill to incorporate correlating the image to body types stored in a database to thereby estimate measurements of the user's body into the invention of Vilcovsky. The motivation would have been to provide a fast and optimized shopping experience for the users.

Claim 20 lacks an inventive step under PCT Article 33(3) as being obvious over Vilcovsky in view of Rosenberg and further in view of Colton and further in view of Ryan and further in view of Hong and further in view of Shimomura.

Regarding claim 20, Vilcovsky lacks the teaching of wherein the estimate measurements comprise body mass estimation.
Shimomura is in the field of providing an easy process of body type determination (abstract) and teaches wherein the estimate measurements comprise body mass estimation (a body type determination is used to calculate an index of lean mass and body mass index, para 0036, 0039, 0042). It would have been obvious to one of ordinary skill in the art at the time of the invention to use the teachings of Shimomura to incorporate of wherein the estimate measurements comprise body mass estimation into the invention of Vilcovsky. The motivation would have been to provide an optimized process of calculating body mass.

Claims 1-20 meet the criteria set out in PCT Article 33(4), and thus have industrial applicability because the subject matter claimed can be made or used in industry.

Electronic Patent Application Fee Transmittal

Application Number:	13843001
Filing Date:	15-Mar-2013
Title of Invention:	DEVICES, SYSTEMS AND METHODS OF CAPTURING AND DISPLAYING APPEARANCES
First Named Inventor/Applicant Name:	Nissi Vilcovsky
Filer:	Joseph Bach/Monica Moreno
Attorney Docket Number:	067055-002000

Filed as Small Entity

Filing Fees for Utility under 35 USC 111(a)

Description	Fee Code	Quantity	Amount	Sub-Total in USD($)
Basic Filing:				
Pages:				
Claims:				
Miscellaneous-Filing:				
Petition:				
Patent-Appeals-and-Interference:				
Post-Allowance-and-Post-Issuance:				
Extension-of-Time:				

Description	Fee Code	Quantity	Amount	Sub-Total in USD($)
Miscellaneous:				
Submission- Information Disclosure Stmt	2806	1	90	90
		Total in USD ($)		**90**

Electronic Acknowledgement Receipt

EFS ID:	21137837
Application Number:	13843001
International Application Number:	
Confirmation Number:	2550
Title of Invention:	DEVICES, SYSTEMS AND METHODS OF CAPTURING AND DISPLAYING APPEARANCES
First Named Inventor/Applicant Name:	Nissi Vilcovsky
Customer Number:	46188
Filer:	Joseph Bach/Monica Moreno
Filer Authorized By:	Joseph Bach
Attorney Docket Number:	067055-002000
Receipt Date:	07-JAN-2015
Filing Date:	15-MAR-2013
Time Stamp:	00:58:04
Application Type:	Utility under 35 USC 111(a)

Payment information:

Submitted with Payment	yes
Payment Type	Deposit Account
Payment was successfully received in RAM	$90
RAM confirmation Number	6278
Deposit Account	503557
Authorized User	
The Director of the USPTO is hereby authorized to charge indicated fees and credit any overpayment as follows:	

File Listing:

Document Number	Document Description	File Name	File Size(Bytes)/ Message Digest	Multi Part /.zip	Pages (if appl.)
1	Information Disclosure Statement (IDS) Form (SB08)	067055_002000_IDS.pdf	613151 0c8eb000c6bad690c8e711aabadbccd127107021	no	6
Warnings:					
Information:					
2	Non Patent Literature	ISR_PCTUS2014034333_dated_DEC_17_2014.pdf	1210247 32ab29b1ac9194e93807aae29a2a105f9d8f6027	no	17
Warnings:					
Information:					
3	Non Patent Literature	NOA_14253827_dated_DEC_15_2014.pdf	578878 d68c98153276d3a1e86ae33a379c1889c5d4412a	no	13
Warnings:					
Information:					
4	Non Patent Literature	NOA_14253831_dated_DEC_3_2014.pdf	476311 38b8af59876a36c5903a7c9d9aed3eface738a22	no	9
Warnings:					
Information:					
5	Fee Worksheet (SB06)	fee-info.pdf	30881 db35cc04f43ac263382128ccbdbae07b97255ba8	no	2
Warnings:					
Information:					
			Total Files Size (in bytes):	2909468	

This Acknowledgement Receipt evidences receipt on the noted date by the USPTO of the indicated documents, characterized by the applicant, and including page counts, where applicable. It serves as evidence of receipt similar to a Post Card, as described in MPEP 503.

New Applications Under 35 U.S.C. 111
If a new application is being filed and the application includes the necessary components for a filing date (see 37 CFR 1.53(b)-(d) and MPEP 506), a Filing Receipt (37 CFR 1.54) will be issued in due course and the date shown on this Acknowledgement Receipt will establish the filing date of the application.

National Stage of an International Application under 35 U.S.C. 371
If a timely submission to enter the national stage of an international application is compliant with the conditions of 35 U.S.C. 371 and other applicable requirements a Form PCT/DO/EO/903 indicating acceptance of the application as a national stage submission under 35 U.S.C. 371 will be issued in addition to the Filing Receipt, in due course.

New International Application Filed with the USPTO as a Receiving Office
If a new international application is being filed and the international application includes the necessary components for an international filing date (see PCT Article 11 and MPEP 1810), a Notification of the International Application Number and of the International Filing Date (Form PCT/RO/105) will be issued in due course, subject to prescriptions concerning national security, and the date shown on this Acknowledgement Receipt will establish the international filing date of the application.

PART B - FEE(S) TRANSMITTAL

Complete and send this form, together with applicable fee(s), to: Mail **Mail Stop ISSUE FEE**
Commissioner for Patents
P.O. Box 1450
Alexandria, Virginia 22313-1450
or Fax (571)-273-2885

INSTRUCTIONS: This form should be used for transmitting the ISSUE FEE and PUBLICATION FEE (if required). Blocks 1 through 5 should be completed where appropriate. All further correspondence including the Patent, advance orders and notification of maintenance fees will be mailed to the current correspondence address as indicated unless corrected below or directed otherwise in Block 1, by (a) specifying a new correspondence address; and/or (b) indicating a separate "FEE ADDRESS" for maintenance fee notifications.

CURRENT CORRESPONDENCE ADDRESS (Note: Use Block 1 for any change of address)

46188 7590 12/05/2014
Nixon Peabody LLP
P.O. Box 60610
Palo Alto, CA 94306

Note: A certificate of mailing can only be used for domestic mailings of the Fee(s) Transmittal. This certificate cannot be used for any other accompanying papers. Each additional paper, such as an assignment or formal drawing, must have its own certificate of mailing or transmission.

Certificate of Mailing or Transmission
I hereby certify that this Fee(s) Transmittal is being deposited with the United States Postal Service with sufficient postage for first class mail in an envelope addressed to the Mail Stop ISSUE FEE address above, or being facsimile transmitted to the USPTO (571) 273-2885, on the date indicated below.

(Depositor's name)
(Signature)
(Date)

APPLICATION NO.	FILING DATE	FIRST NAMED INVENTOR	ATTORNEY DOCKET NO.	CONFIRMATION NO.
13/843,001	03/15/2013	Nissi Vilcovsky	067055-002000	2550

TITLE OF INVENTION: DEVICES, SYSTEMS AND METHODS OF CAPTURING AND DISPLAYING APPEARANCES

APPLN. TYPE	ENTITY STATUS	ISSUE FEE DUE	PUBLICATION FEE DUE	PREV. PAID ISSUE FEE	TOTAL FEE(S) DUE	DATE DUE
nonprovisional	SMALL	$480	$0	$0	$480	03/05/2015

EXAMINER	ART UNIT	CLASS-SUBCLASS
SHANKAR, VIJAY	2697	345-204000

1. Change of correspondence address or indication of "Fee Address" (37 CFR 1.363).
- ❑ Change of correspondence address (or Change of Correspondence Address form PTO/SB/122) attached.
- ❑ "Fee Address" indication (or "Fee Address" Indication form PTO/SB/47; Rev 03-02 or more recent) attached. **Use of a Customer Number is required.**

2. For printing on the patent front page, list
(1) The names of up to 3 registered patent attorneys or agents OR, alternatively,
(2) The name of a single firm (having as a member a registered attorney or agent) and the names of up to 2 registered patent attorneys or agents. If no name is listed, no name will be printed.

1 NIXON PEABODY LLP
2 Joseph Bach, Esq.
3

3. ASSIGNEE NAME AND RESIDENCE DATA TO BE PRINTED ON THE PATENT (print or type)

PLEASE NOTE: Unless an assignee is identified below, no assignee data will appear on the patent. If an assignee is identified below, the document has been filed for recordation as set forth in 37 CFR 3.11. Completion of this form is NOT a substitute for filing an assignment.

(A) NAME OF ASSIGNEE: EYESMATCH LTD

(B) RESIDENCE: (CITY and STATE OR COUNTRY): Road Town, Tortola, BRITISH VIRGIN ISLANDS

Please check the appropriate assignee category or categories (will not be printed on the patent) : ❑ Individual ☒ Corporation or other private group entity ❑ Government

4a. The following fee(s) are submitted:
- ☒ Issue Fee
- ❑ Publication Fee (No small entity discount permitted)
- ❑ Advance Order - # of Copies _____

4b. Payment of Fee(s): **(Please first reapply any previously paid issue fee shown above)**
- ❑ A check is enclosed.
- ❑ Payment by credit card. Form PTO-2038 is attached.
- ☒ The director is hereby authorized to charge the required fee(s), any deficiency, or credits any overpayment, to Deposit Account Number 50-3557 (enclose an extra copy of this form).

5. **Change in Entity Status** (from status indicated above)
- ❑ Applicant certifying micro entity status. See 37 CFR 1.29 — NOTE: Absent a valid certification of Micro Entity Status (see forms PTO/SB/15A and 15B), issue fee payment in the micro entity amount will not be accepted at the risk of application abandonment.
- ❑ Applicant asserting small entity status. See 37 CFR 1.27 — NOTE: If the application was previously under micro entity status, checking this box will be taken to be a notification of loss of entitlement to micro entity status.
- ❑ Applicant changing to regular undiscounted fee status. — NOTE: Checking this box will be taken to be a notification of loss of entitlement to small or micro entity status, as applicable.

NOTE: This form must be signed in accordance with 37 CFR 1.31 and 1.33. See 37 CFR 1.4 for signature requirements and certifications.

Authorized Signature /Joseph Bach/ Date January 30, 2015
Typed or printed name Joseph Bach Registration No. 37,771

PTOL-85 Part B (10-13) Approved for use through 10/31/2013. OMB 0651-0033 U.S. Patent and Trademark Office; U.S. DEPARTMENT OF COMMERCE

Electronic Patent Application Fee Transmittal

Application Number:	13843001
Filing Date:	15-Mar-2013
Title of Invention:	DEVICES, SYSTEMS AND METHODS OF CAPTURING AND DISPLAYING APPEARANCES
First Named Inventor/Applicant Name:	Nissi Vilcovsky
Filer:	Joseph Bach/Monica Moreno
Attorney Docket Number:	067055-002000

Filed as Small Entity

Filing Fees for Utility under 35 USC 111(a)

Description	Fee Code	Quantity	Amount	Sub-Total in USD($)
Basic Filing:				
Pages:				
Claims:				
Miscellaneous-Filing:				
Petition:				
Patent-Appeals-and-Interference:				
Post-Allowance-and-Post-Issuance:				
Utility Appl Issue Fee	2501	1	480	480

Description	Fee Code	Quantity	Amount	Sub-Total in USD($)
Extension-of-Time:				
Miscellaneous:				
			Total in USD ($)	**480**

Electronic Acknowledgement Receipt

EFS ID:	21359796
Application Number:	13843001
International Application Number:	
Confirmation Number:	2550
Title of Invention:	DEVICES, SYSTEMS AND METHODS OF CAPTURING AND DISPLAYING APPEARANCES
First Named Inventor/Applicant Name:	Nissi Vilcovsky
Customer Number:	46188
Filer:	Joseph Bach/Monica Moreno
Filer Authorized By:	Joseph Bach
Attorney Docket Number:	067055-002000
Receipt Date:	30-JAN-2015
Filing Date:	15-MAR-2013
Time Stamp:	15:30:55
Application Type:	Utility under 35 USC 111(a)

Payment information:

Submitted with Payment	yes
Payment Type	Deposit Account
Payment was successfully received in RAM	$480
RAM confirmation Number	2127
Deposit Account	503557
Authorized User	
The Director of the USPTO is hereby authorized to charge indicated fees and credit any overpayment as follows:	

File Listing:

Document Number	Document Description	File Name	File Size(Bytes)/ Message Digest	Multi Part /.zip	Pages (if appl.)
1	Issue Fee Payment (PTO-85B)	067055-002000_Fees_Transmittal.pdf	108696 1f75895e48300acc65b4a14fb6d46173460ae62e	no	1
Warnings:					
Information:					
2	Fee Worksheet (SB06)	fee-info.pdf	30678 ffa7aff653408cfbebde19bf122e25d9534b3e5d	no	2
Warnings:					
Information:					
		Total Files Size (in bytes):	139374		

This Acknowledgement Receipt evidences receipt on the noted date by the USPTO of the indicated documents, characterized by the applicant, and including page counts, where applicable. It serves as evidence of receipt similar to a Post Card, as described in MPEP 503.

New Applications Under 35 U.S.C. 111
If a new application is being filed and the application includes the necessary components for a filing date (see 37 CFR 1.53(b)-(d) and MPEP 506), a Filing Receipt (37 CFR 1.54) will be issued in due course and the date shown on this Acknowledgement Receipt will establish the filing date of the application.

National Stage of an International Application under 35 U.S.C. 371
If a timely submission to enter the national stage of an international application is compliant with the conditions of 35 U.S.C. 371 and other applicable requirements a Form PCT/DO/EO/903 indicating acceptance of the application as a national stage submission under 35 U.S.C. 371 will be issued in addition to the Filing Receipt, in due course.

New International Application Filed with the USPTO as a Receiving Office
If a new international application is being filed and the international application includes the necessary components for an international filing date (see PCT Article 11 and MPEP 1810), a Notification of the International Application Number and of the International Filing Date (Form PCT/RO/105) will be issued in due course, subject to prescriptions concerning national security, and the date shown on this Acknowledgement Receipt will establish the international filing date of the application.

UNITED STATES PATENT AND TRADEMARK OFFICE

UNITED STATES DEPARTMENT OF COMMERCE
United States Patent and Trademark Office
Address: COMMISSIONER FOR PATENTS
P.O. Box 1450
Alexandria, Virginia 22313-1450
www.uspto.gov

APPLICATION NO.	FILING DATE	FIRST NAMED INVENTOR	ATTORNEY DOCKET NO.	CONFIRMATION NO.
13/843,001	03/15/2013	Nissi Vilcovsky	067055-002000	2550

46188 7590 02/10/2015
Nixon Peabody LLP
P.O. Box 60610
Palo Alto, CA 94306

EXAMINER
SHANKAR, VIJAY

ART UNIT	PAPER NUMBER
2697	

NOTIFICATION DATE	DELIVERY MODE
02/10/2015	ELECTRONIC

Please find below and/or attached an Office communication concerning this application or proceeding.

The time period for reply, if any, is set in the attached communication.

Notice of the Office communication was sent electronically on above-indicated "Notification Date" to the following e-mail address(es):

patentsv@nixonpeabody.com
ocastanon@nixonpeabody.com

PTOL-90A (Rev. 04/07)

UNITED STATES DEPARTMENT OF COMMERCE
U.S. Patent and Trademark Office
Address : COMMISSIONER FOR PATENTS
P.O. Box 1450
Alexandria, Virginia 22313-1450

APPLICATION NO./ CONTROL NO.	FILING DATE	FIRST NAMED INVENTOR / PATENT IN REEXAMINATION	ATTORNEY DOCKET NO.
13/843,001	15 March, 2013	VILCOVSKY ET AL.	067055-002000

		EXAMINER	
Nixon Peabody LLP P.O. Box 60610 Palo Alto, CA 94306		VIJAY SHANKAR	
		ART UNIT	PAPER
		2697	20150204

DATE MAILED:

Please find below and/or attached an Office communication concerning this application or proceeding.

Commissioner for Patents

The IDS filed on 1/7/15 is considered by the Examiner.

/VIJAY SHANKAR/
Primary Examiner, Art Unit 2697

PTO-90C (Rev.04-03)

Under the Paperwork Reduction Act of 1995, no persons are required to respond to a collection of information unless it contains a valid OMB control number.

INFORMATION DISCLOSURE STATEMENT BY APPLICANT (**Not for submission under 37 CFR 1.99)**		
	Application Number	13843001
	Filing Date	2013-03-15
	First Named Inventor	Nissi Vilcovsky
	Art Unit	2697
	Examiner Name	SHANKAR, VIJAY
	Attorney Docket Number	067055-002000

U.S.PATENTS						Remove
Examiner Initial*	Cite No	Patent Number	Kind Code[1]	Issue Date	Name of Patentee or Applicant of cited Document	Pages,Columns,Lines where Relevant Passages or Relevant Figures Appear
	1	5230039	A	1993-07-20	Grossman et al.	
	2	5923776	A	1999-07-13	Kamgar-Parsi	
	3	5937081	A	1999-08-10	O'Brill et al.	
	4	6195467	B1	2001-02-27	Asimopoulos et al.	
	5	6366694	B1	2002-04-02	Acharya	
	6	7874481	B2	2011-01-25	Silverbrook et al.	
	7	8000727	B1	2011-08-16	Bushman et al.	
If you wish to add additional U.S. Patent citation information please click the Add button.						Add
U.S.PATENT APPLICATION PUBLICATIONS						Remove

EFS Web 2.1.17 ALL REFERENCES CONSIDERED EXCEPT WHERE LINED THROUGH. /V.S./

Receipt date: 01/07/2015	Application Number	13843001	13843001 - GAU: 2697
INFORMATION DISCLOSURE STATEMENT BY APPLICANT (**Not for submission under 37 CFR 1.99)**	Filing Date	2013-03-15	
	First Named Inventor	Nissi Vilcovsky	
	Art Unit	2697	
	Examiner Name	SHANKAR, VIJAY	
	Attorney Docket Number	067055-002000	

Examiner Initial*	Cite No	Publication Number	Kind Code[1]	Publication Date	Name of Patentee or Applicant of cited Document	Pages,Columns,Lines where Relevant Passages or Relevant Figures Appear
	1	20020049546	A1	2002-04-25	Shimomura	
	2	20030110099	A1	2003-06-12	Trajkovic et al.	
	3	20030146901	A1	2003-08-07	Ryan	
	4	20060158534	A1	2006-07-20	Gotohda	
	5	20070040033	A1	2007-02-22	Rosenberg	
	6	20080056564	A1	2008-03-06	Lindbloom	
	7	20100169411	A1	2010-07-01	Colton et al.	
	8	20120120184	A1	2012-05-17	Fornell et al.	
	9	20120154872	A1	2012-06-21	Reddy	
	10	20120229637	A1	2012-09-13	Mooradian et al.	

EFS Web 2.1.17 ALL REFERENCES CONSIDERED EXCEPT WHERE LINED THROUGH. /V.S./

Receipt date: 01/07/2015	Application Number	13843001	13843001 - GAU: 2697
INFORMATION DISCLOSURE STATEMENT BY APPLICANT (**Not for submission under 37 CFR 1.99)**	Filing Date	2013-03-15	
	First Named Inventor	Nissi Vilcovsky	
	Art Unit	2697	
	Examiner Name	SHANKAR, VIJAY	
	Attorney Docket Number	067055-002000	

	11	20120233089	A1	2012-09-13	Calman et al.	
	12	20130083015	A1	2013-04-04	Hernandez Esteban	
	13	20130088562	A1	2013-04-11	Hong et al.	

If you wish to add additional U.S. Published Application citation information please click the Add button. Add

FOREIGN PATENT DOCUMENTS Remove

Examiner Initial*	Cite No	Foreign Document Number[3]	Country Code[2] ¡	Kind Code[4]	Publication Date	Name of Patentee or Applicant of cited Document	Pages,Columns,Lines where Relevant Passages or Relevant Figures Appear	T[5]
	1							☐

If you wish to add additional Foreign Patent Document citation information please click the Add button Add

NON-PATENT LITERATURE DOCUMENTS Remove

Examiner Initials*	Cite No	Include name of the author (in CAPITAL LETTERS), title of the article (when appropriate), title of the item (book, magazine, journal, serial, symposium, catalog, etc), date, pages(s), volume-issue number(s), publisher, city and/or country where published.	T[5]
	1	International Search Report and Written Opinion for PCT/US2014/034333 dated December 17, 2014.	☐
	2	Notice of Allowance for U.S. Patent Application No. 14/253,827 dated December 15, 2014.	☐
	3	Notice of Allowance for U.S. Patent Application No. 14/253,831 dated December 3, 2014.	☐

If you wish to add additional non-patent literature document citation information please click the Add button Add

EFS Web 2.1.17 ALL REFERENCES CONSIDERED EXCEPT WHERE LINED THROUGH. /V.S./

Receipt date: 01/07/2015	Application Number	13843001 13843001 - GAU: 2697
INFORMATION DISCLOSURE STATEMENT BY APPLICANT (**Not for submission under 37 CFR 1.99)**	Filing Date	2013-03-15
	First Named Inventor	Nissi Vilcovsky
	Art Unit	2697
	Examiner Name	SHANKAR, VIJAY
	Attorney Docket Number	067055-002000

EXAMINER SIGNATURE			
Examiner Signature	/Vijay Shankar/	Date Considered	02/04/2015

*EXAMINER: Initial if reference considered, whether or not citation is in conformance with MPEP 609. Draw line through a citation if not in conformance and not considered. Include copy of this form with next communication to applicant.

[1] See Kind Codes of USPTO Patent Documents at www.USPTO.GOV or MPEP 901.04. [2] Enter office that issued the document, by the two-letter code (WIPO Standard ST.3). [3] For Japanese patent documents, the indication of the year of the reign of the Emperor must precede the serial number of the patent document. [4] Kind of document by the appropriate symbols as indicated on the document under WIPO Standard ST.16 if possible. [5] Applicant is to place a check mark here if English language translation is attached.

ALL REFERENCES CONSIDERED EXCEPT WHERE LINED THROUGH. /V.S./

Receipt date: 01/07/2015	Application Number	13843001	13843001 - GAU: 2697
INFORMATION DISCLOSURE STATEMENT BY APPLICANT (**Not for submission under 37 CFR 1.99)**	Filing Date	2013-03-15	
	First Named Inventor	Nissi Vilcovsky	
	Art Unit	2697	
	Examiner Name	SHANKAR, VIJAY	
	Attorney Docket Number	067055-002000	

CERTIFICATION STATEMENT

Please see 37 CFR 1.97 and 1.98 to make the appropriate selection(s):

☒ That each item of information contained in the information disclosure statement was first cited in any communication from a foreign patent office in a counterpart foreign application not more than three months prior to the filing of the information disclosure statement. See 37 CFR 1.97(e)(1).

OR

☐ That no item of information contained in the information disclosure statement was cited in a communication from a foreign patent office in a counterpart foreign application, and, to the knowledge of the person signing the certification after making reasonable inquiry, no item of information contained in the information disclosure statement was known to any individual designated in 37 CFR 1.56(c) more than three months prior to the filing of the information disclosure statement. See 37 CFR 1.97(e)(2).

☐ See attached certification statement.

☒ The fee set forth in 37 CFR 1.17 (p) has been submitted herewith.

☐ A certification statement is not submitted herewith.

SIGNATURE

A signature of the applicant or representative is required in accordance with CFR 1.33, 10.18. Please see CFR 1.4(d) for the form of the signature.

Signature	/Joseph Bach/	Date (YYYY-MM-DD)	2015-01-06
Name/Print	Joseph Bach	Registration Number	37,771

This collection of information is required by 37 CFR 1.97 and 1.98. The information is required to obtain or retain a benefit by the public which is to file (and by the USPTO to process) an application. Confidentiality is governed by 35 U.S.C. 122 and 37 CFR 1.14. This collection is estimated to take 1 hour to complete, including gathering, preparing and submitting the completed application form to the USPTO. Time will vary depending upon the individual case. Any comments on the amount of time you require to complete this form and/or suggestions for reducing this burden, should be sent to the Chief Information Officer, U.S. Patent and Trademark Office, U.S. Department of Commerce, P.O. Box 1450, Alexandria, VA 22313-1450. DO NOT SEND FEES OR COMPLETED FORMS TO THIS ADDRESS. **SEND TO: Commissioner for Patents, P.O. Box 1450, Alexandria, VA 22313-1450.**

EFS Web 2.1.17 ALL REFERENCES CONSIDERED EXCEPT WHERE LINED THROUGH. /V.S./

Privacy Act Statement

The Privacy Act of 1974 (P.L. 93-579) requires that you be given certain information in connection with your submission of the attached form related to a patent application or patent. Accordingly, pursuant to the requirements of the Act, please be advised that: (1) the general authority for the collection of this information is 35 U.S.C. 2(b)(2); (2) furnishing of the information solicited is voluntary; and (3) the principal purpose for which the information is used by the U.S. Patent and Trademark Office is to process and/or examine your submission related to a patent application or patent. If you do not furnish the requested information, the U.S. Patent and Trademark Office may not be able to process and/or examine your submission, which may result in termination of proceedings or abandonment of the application or expiration of the patent.

The information provided by you in this form will be subject to the following routine uses:

1. The information on this form will be treated confidentially to the extent allowed under the Freedom of Information Act (5 U.S.C. 552) and the Privacy Act (5 U.S.C. 552a). Records from this system of records may be disclosed to the Department of Justice to determine whether the Freedom of Information Act requires disclosure of these record s.

2. A record from this system of records may be disclosed, as a routine use, in the course of presenting evidence to a court, magistrate, or administrative tribunal, including disclosures to opposing counsel in the course of settlement negotiations.

3. A record in this system of records may be disclosed, as a routine use, to a Member of Congress submitting a request involving an individual, to whom the record pertains, when the individual has requested assistance from the Member with respect to the subject matter of the record.

4. A record in this system of records may be disclosed, as a routine use, to a contractor of the Agency having need for the information in order to perform a contract. Recipients of information shall be required to comply with the requirements of the Privacy Act of 1974, as amended, pursuant to 5 U.S.C. 552a(m).

5. A record related to an International Application filed under the Patent Cooperation Treaty in this system of records may be disclosed, as a routine use, to the International Bureau of the World Intellectual Property Organization, pursuant to the Patent Cooperation Treaty.

6. A record in this system of records may be disclosed, as a routine use, to another federal agency for purposes of National Security review (35 U.S.C. 181) and for review pursuant to the Atomic Energy Act (42 U.S.C. 218(c)).

7. A record from this system of records may be disclosed, as a routine use, to the Administrator, General Services, or his/her designee, during an inspection of records conducted by GSA as part of that agency's responsibility to recommend improvements in records management practices and programs, under authority of 44 U.S.C. 2904 and 2906. Such disclosure shall be made in accordance with the GSA regulations governing inspection of records for this purpose, and any other relevant (i.e., GSA or Commerce) directive. Such disclosure shall not be used to make determinations about individuals.

8. A record from this system of records may be disclosed, as a routine use, to the public after either publication of the application pursuant to 35 U.S.C. 122(b) or issuance of a patent pursuant to 35 U.S.C. 151. Further, a record may be disclosed, subject to the limitations of 37 CFR 1.14, as a routine use, to the public if the record was filed in an application which became abandoned or in which the proceedings were terminated and which application is referenced by either a published application, an application open to public inspections or an issued patent.

9. A record from this system of records may be disclosed, as a routine use, to a Federal, State, or local law enforcement agency, if the USPTO becomes aware of a violation or potential violation of law or regulation.

ALL REFERENCES CONSIDERED EXCEPT WHERE LINED THROUGH. /V.S./

UNITED STATES PATENT AND TRADEMARK OFFICE

UNITED STATES DEPARTMENT OF COMMERCE
United States Patent and Trademark Office
Address: COMMISSIONER FOR PATENTS
P.O. Box 1450
Alexandria, Virginia 22313-1450
www.uspto.gov

APPLICATION NO.	ISSUE DATE	PATENT NO.	ATTORNEY DOCKET NO.	CONFIRMATION NO.
13/843,001	03/17/2015	8982109	067055-002000	2550

46188 7590 02/25/2015
Nixon Peabody LLP
P.O. Box 60610
Palo Alto, CA 94306

ISSUE NOTIFICATION

The projected patent number and issue date are specified above.

Determination of Patent Term Adjustment under 35 U.S.C. 154 (b)
(application filed on or after May 29, 2000)

The Patent Term Adjustment is 169 day(s). Any patent to issue from the above-identified application will include an indication of the adjustment on the front page.

If a Continued Prosecution Application (CPA) was filed in the above-identified application, the filing date that determines Patent Term Adjustment is the filing date of the most recent CPA.

Applicant will be able to obtain more detailed information by accessing the Patent Application Information Retrieval (PAIR) WEB site (http://pair.uspto.gov).

Any questions regarding the Patent Term Extension or Adjustment determination should be directed to the Office of Patent Legal Administration at (571)-272-7702. Questions relating to issue and publication fee payments should be directed to the Application Assistance Unit (AAU) of the Office of Data Management (ODM) at (571)-272-4200.

APPLICANT(s) (Please see PAIR WEB site http://pair.uspto.gov for additional applicants):

Nissi Vilcovsky, Tokyo, JAPAN;
Ofer Saban, Vienna, VA;

The United States represents the largest, most dynamic marketplace in the world and is an unparalleled location for business investment, innovation, and commercialization of new technologies. The USA offers tremendous resources and advantages for those who invest and manufacture goods here. Through SelectUSA, our nation works to encourage and facilitate business investment. To learn more about why the USA is the best country in the world to develop technology, manufacture products, and grow your business, visit SelectUSA.gov.

IR103 (Rev. 10/09)

Doc Code: PA..
Document Description: Power of Attorney

PTO/AIA/82B (07-13)
Approved for use through 11/30/2014. OMB 0651-0051
U.S. Patent and Trademark Office; U.S. DEPARTMENT OF COMMERCE
Under the Paperwork Reduction Act of 1995, no persons are required to respond to a collection of information unless it displays a valid OMB control number

POWER OF ATTORNEY BY APPLICANT

I hereby revoke all previous powers of attorney given in the application identified in either the attached transmittal letter or the boxes below.

Application Number	Filing Date
13/843,001	March 15 2013

(Note: The boxes above may be left blank if information is provided on form PTO/AIA/82A.)

☑ I hereby appoint the Patent Practitioner(s) associated with the following Customer Number as my/our attorney(s) or agent(s), and to transact all business in the United States Patent and Trademark Office connected therewith for the application referenced in the attached transmittal letter (form PTO/AIA/82A) or identified above: 146807

OR

☐ I hereby appoint Practitioner(s) named in the attached list (form PTO/AIA/82C) as my/our attorney(s) or agent(s), and to transact all business in the United States Patent and Trademark Office connected therewith for the patent application referenced in the attached transmittal letter (form PTO/AIA/82A) or identified above. (Note: Complete form PTO/AIA/82C.)

Please recognize or change the correspondence address for the application identified in the attached transmittal letter or the boxes above to:

☑ The address associated with the above-mentioned Customer Number

OR

☐ The address associated with Customer Number:

OR

Firm or Individual Name					
Address					
City		State		Zip	
Country					
Telephone		Email			

I am the Applicant (if the Applicant is a juristic entity, list the Applicant name in the box):

EYESMATCH LTD

☐ Inventor or Joint Inventor (title not required below)

☐ Legal Representative of a Deceased or Legally Incapacitated Inventor (title not required below)

☑ Assignee or Person to Whom the Inventor is Under an Obligation to Assign (provide signer's title if applicant is a juristic entity)

☐ Person Who Otherwise Shows Sufficient Proprietary Interest (e.g., a petition under 37 CFR 1.46(b)(2) was granted in the application or is concurrently being filed with this document) (provide signer's title if applicant is a juristic entity)

SIGNATURE of Applicant for Patent

The undersigned (whose title is supplied below) is authorized to act on behalf of the applicant (e.g., where the applicant is a juristic entity).

Signature		Date (Optional)	
Name	SALVADOR NISSI VILOVSKY		
Title	CEO		

NOTE: Signature - This form must be signed by the applicant in accordance with 37 CFR 1.33. See 37 CFR 1.4 for signature requirements and certifications. If more than one applicant, use multiple forms.

☐ Total of forms are submitted.

This collection of information is required by 37 CFR 1.131, 1.32, and 1.33. The information is required to obtain or retain a benefit by the public which is to file (and by the USPTO to process) an application. Confidentiality is governed by 35 U.S.C. 122 and 37 CFR 1.11 and 1.14. This collection is estimated to take 3 minutes to complete, including gathering, preparing, and submitting the completed application form to the USPTO. Time will vary depending upon the individual case. Any comments on the amount of time you require to complete this form and/or suggestions for reducing this burden, should be sent to the Chief Information Officer, U.S. Patent and Trademark Office, U.S. Department of Commerce, P.O. Box 1450, Alexandria, VA 22313-1450. DO NOT SEND FEES OR COMPLETED FORMS TO THIS ADDRESS. **SEND TO: Commissioner for Patents, P.O. Box 1450, Alexandria, VA 22313-1450.**

If you need assistance in completing the form, call 1-800-PTO-9199 and select option 2.

Electronic Acknowledgement Receipt

EFS ID:	28826232
Application Number:	13843001
International Application Number:	
Confirmation Number:	2550
Title of Invention:	DEVICES, SYSTEMS AND METHODS OF CAPTURING AND DISPLAYING APPEARANCES
First Named Inventor/Applicant Name:	Nissi Vilcovsky
Customer Number:	46188
Filer:	Joseph Bach/Devon Pack
Filer Authorized By:	Joseph Bach
Attorney Docket Number:	067055-002000
Receipt Date:	04-APR-2017
Filing Date:	15-MAR-2013
Time Stamp:	13:18:23
Application Type:	Utility under 35 USC 111(a)

Payment information:

Submitted with Payment	no

File Listing:

Document Number	Document Description	File Name	File Size(Bytes)/ Message Digest	Multi Part /.zip	Pages (if appl.)
1	Power of Attorney	13843001EyesMatch_POA.pdf	981456 c90884d3d4f12abfd3336e9f3d2cfec3fb5aa52d	no	1

Warnings:

Information:	
Total Files Size (in bytes):	981456

This Acknowledgement Receipt evidences receipt on the noted date by the USPTO of the indicated documents, characterized by the applicant, and including page counts, where applicable. It serves as evidence of receipt similar to a Post Card, as described in MPEP 503.

New Applications Under 35 U.S.C. 111
If a new application is being filed and the application includes the necessary components for a filing date (see 37 CFR 1.53(b)-(d) and MPEP 506), a Filing Receipt (37 CFR 1.54) will be issued in due course and the date shown on this Acknowledgement Receipt will establish the filing date of the application.

National Stage of an International Application under 35 U.S.C. 371
If a timely submission to enter the national stage of an international application is compliant with the conditions of 35 U.S.C. 371 and other applicable requirements a Form PCT/DO/EO/903 indicating acceptance of the application as a national stage submission under 35 U.S.C. 371 will be issued in addition to the Filing Receipt, in due course.

New International Application Filed with the USPTO as a Receiving Office
If a new international application is being filed and the international application includes the necessary components for an international filing date (see PCT Article 11 and MPEP 1810), a Notification of the International Application Number and of the International Filing Date (Form PCT/RO/105) will be issued in due course, subject to prescriptions concerning national security, and the date shown on this Acknowledgement Receipt will establish the international filing date of the application.

Doc Code: N572

UNITED STATES PATENT AND TRADEMARK OFFICE

UNITED STATES DEPARTMENT OF COMMERCE
United States Patent and Trademark Office
Address: COMMISSIONER FOR PATENTS
P.O. Box 1450
Alexandria, Virginia 22313-1450
www.uspto.gov

APPLICATION NUMBER	FILING DATE	FIRST NAMED APPLICANT	ATTY. DOCKET NO./TITLE
13/843,001	03/15/2013	Nissi Vilcovsky	067055-002000

CONFIRMATION NO. 2550

OC000000090541834

46188
Nixon Peabody LLP
P.O. Box 26769
San Francisco, CA 94126

Cc: WOMBLE CARLYLE SANDRIDGE & RICE, LLP
ATTN: IP DOCKETING
P.O. BOX 7037
ATLANTA, GA 30537-7037

Date Mailed: 04/11/2017

DENIAL OF REQUEST FOR POWER OF ATTORNEY

The request for Power of Attorney filed 04/04/2017 is acknowledged. However, the request cannot be granted at this time for the reason stated below.

- ☐ The Power of Attorney you provided did not comply with the new Power of Attorney rules that became effective on June 25, 2004. See 37 CFR 1.32.
- ☐ The revocation is not signed by the applicant, the assignee of the entire interest, or one particular principal attorney having the authority to revoke.
- ☑ The Power of Attorney is from an assignee and the Certificate required by 37 CFR 3.73(c) has not been received.
- ☐ The person signing for the assignee has omitted their empowerment to sign on behalf of the assignee.
- ☐ The inventor(s) is without authority to appoint attorneys since the assignee has intervened as provided by 37 CFR 3.71.
- ☐ The signature(s) of _____, a co-inventor in this application, has been omitted. The Power of Attorney will be entered upon receipt of confirmation signed by said co-inventor(s).
- ☐ The person(s) appointed in the Power of Attorney is not registered to practice before the U.S. Patent and Trademark Office.
- ☐ Only one Customer Number can be designated for the Power of Attorney in an application. The Customer Number that was captured is the first Customer Number provided on the Power of Attorney document.

Doc Code: N572

UNITED STATES PATENT AND TRADEMARK OFFICE

UNITED STATES DEPARTMENT OF COMMERCE
United States Patent and Trademark Office
Address: COMMISSIONER FOR PATENTS
P.O. Box 1450
Alexandria, Virginia 22313-1450
www.uspto.gov

- ☐ A request under 37 CFR 1.48 to add an inventor was granted in this application, however, no power of attorney consistent with the power of attorney granted by the originally named inventive entity has been received. Thus, the addition of the inventor has resulted in the loss of power of attorney in the application. See 37 CFR 1.32(e).

- ☐ The power of attorney has not been accepted because the party who is giving power of attorney has not been identified. Power of attorney may only be signed by the applicant for patent (37 CFR 1.42) or the patent owner. A patent owner who was not the applicant must appoint any power of attorney in compliance with 37 CFR 3.71 and 3.73. See 37 CFR 1.32(b)(4).

- ☐ The power of attorney from the inventors has not been accepted because it is a copy from a prior national application for which benefit is claimed and the continuing application names an inventor who was not named as an inventor in the prior application.

- ☐ The power of attorney from the inventors has not been accepted because the power of attorney must be signed by the applicant for patent. See 37 CFR 1.32(b)(4).

- ☐ Any request to correct or update the name of the applicant must include an application data sheet (ADS) in compliance with 37 CFR 1.76 specifying the correct or updated name of the applicant in the applicant information section. Any request to change the applicant after an original applicant has been specified under 37 CFR 1.46(b) must include a new ADS in compliance with 37 CFR 1.76 specifying the applicant in the applicant information section and comply with 37 CFR 3.71 and 3.73. See 37 CFR 1.46(c).

Any inquiries regarding this notice should be directed to the Application Assistance Unit at 571-272-4200.

Application Assistance Unit
571-272-4200

UNITED STATES PATENT AND TRADEMARK OFFICE

UNITED STATES DEPARTMENT OF COMMERCE
United States Patent and Trademark Office
Address: COMMISSIONER FOR PATENTS
P.O. Box 1450
Alexandria, Virginia 22313-1450
www.uspto.gov

APPLICATION NUMBER	FILING OR 371(C) DATE	FIRST NAMED APPLICANT	ATTY. DOCKET NO./TITLE
13/843,001	03/15/2013	Nissi Vilcovsky	067055-002000

CONFIRMATION NO. 2550

46188
Nixon Peabody LLP
P.O. Box 26769
San Francisco, CA 94126

MISCELLANEOUS NOTICE

OC000000090541834

Date Mailed: 04/12/2017

A communication which cannot be delivered in electronic form has been mailed to the applicant.

Doc Code: PA..
Document Description: Power of Attorney

PTO/AIA/82B (07-13)
Approved for use through 11/30/2014. OMB 0651-0051
U.S. Patent and Trademark Office; U.S. DEPARTMENT OF COMMERCE
Under the Paperwork Reduction Act of 1995, no persons are required to respond to a collection of information unless it displays a valid OMB control number

POWER OF ATTORNEY BY APPLICANT

I hereby revoke all previous powers of attorney given in the application identified in either the attached transmittal letter or the boxes below.

Application Number	Filing Date
13/843,001	March 15, 2013

(Note: The boxes above may be left blank if information is provided on form PTO/AIA/82A.)

☑ I hereby appoint the Patent Practitioner(s) associated with the following Customer Number as my/our attorney(s) or agent(s), and to transact all business in the United States Patent and Trademark Office connected therewith for the application referenced in the attached transmittal letter (form PTO/AIA/82A) or identified above: 146807

OR

☐ I hereby appoint Practitioner(s) named in the attached list (form PTO/AIA/82C) as my/our attorney(s) or agent(s), and to transact all business in the United States Patent and Trademark Office connected therewith for the patent application referenced in the attached transmittal letter (form PTO/AIA/82A) or identified above. (Note: Complete form PTO/AIA/82C.)

Please recognize or change the correspondence address for the application identified in the attached transmittal letter or the boxes above to:

☑ The address associated with the above-mentioned Customer Number

OR

☐ The address associated with Customer Number:

OR

Firm or Individual Name					
Address					
City		State		Zip	
Country					
Telephone		Email			

I am the Applicant (if the Applicant is a juristic entity, list the Applicant name in the box):

EYESMATCH LTD

☐ Inventor or Joint Inventor (title not required below)

☐ Legal Representative of a Deceased or Legally Incapacitated Inventor (title not required below)

☑ Assignee or Person to Whom the Inventor is Under an Obligation to Assign (provide signer's title if applicant is a juristic entity)

☐ Person Who Otherwise Shows Sufficient Proprietary Interest (e.g., a petition under 37 CFR 1.46(b)(2) was granted in the application or is concurrently being filed with this document) (provide signer's title if applicant is a juristic entity)

SIGNATURE of Applicant for Patent

The undersigned (whose title is supplied below) is authorized to act on behalf of the applicant (e.g., where the applicant is a juristic entity).

Signature		Date (Optional)	
Name	SALVADOR NISSI VILORSY		
Title	CEO		

NOTE: Signature - This form must be signed by the applicant in accordance with 37 CFR 1.33. See 37 CFR 1.4 for signature requirements and certifications. If more than one applicant, use multiple forms.

☐ Total of forms are submitted.

This collection of information is required by 37 CFR 1.131, 1.32, and 1.33. The information is required to obtain or retain a benefit by the public which is to file (and by the USPTO to process) an application. Confidentiality is governed by 35 U.S.C. 122 and 37 CFR 1.11 and 1.14. This collection is estimated to take 3 minutes to complete, including gathering, preparing, and submitting the completed application form to the USPTO. Time will vary depending upon the individual case. Any comments on the amount of time you require to complete this form and/or suggestions for reducing this burden, should be sent to the Chief Information Officer, U.S. Patent and Trademark Office, U.S. Department of Commerce, P.O. Box 1450, Alexandria, VA 22313-1450. DO NOT SEND FEES OR COMPLETED FORMS TO THIS ADDRESS. **SEND TO: Commissioner for Patents, P.O. Box 1450, Alexandria, VA 22313-1450.**

If you need assistance in completing the form, call 1-800-PTO-9199 and select option 2.

PTO/AIA/96 (08-12)
Approved for use through 01/31/2013. OMB 0651-0031
U.S. Patent and Trademark Office; U.S. DEPARTMENT OF COMMERCE
Under the Paperwork Reduction Act of 1995, no persons are required to respond to a collection of information unless it displays a valid OMB control number.

STATEMENT UNDER 37 CFR 3.73(c)

Applicant/Patent Owner: EYESMATCH LTD

Application No./Patent No.: 8,982,109 Filed/Issue Date: March 17, 2015

Titled: DEVICES, SYSTEMS AND METHODS OF CAPTURING AND DISPLAYING APPEARANCES

EYESMATCH LTD, a corporation

(Name of Assignee) (Type of Assignee, e.g., corporation, partnership, university, government agency, etc.)

states that, for the patent application/patent identified above, it is (choose **one** of options 1, 2, 3 or 4 below):

1. ☑ The assignee of the entire right, title, and interest.

2. ☐ An assignee of less than the entire right, title, and interest (check applicable box):

☐ The extent (by percentage) of its ownership interest is _____%. Additional Statement(s) by the owners holding the balance of the interest must be submitted to account for 100% of the ownership interest.

☐ There are unspecified percentages of ownership. The other parties, including inventors, who together own the entire right, title and interest are:

Additional Statement(s) by the owner(s) holding the balance of the interest must be submitted to account for the entire right, title, and interest.

3. ☐ The assignee of an undivided interest in the entirety (a complete assignment from one of the joint inventors was made). The other parties, including inventors, who together own the entire right, title, and interest are:

Additional Statement(s) by the owner(s) holding the balance of the interest must be submitted to account for the entire right, title, and interest.

4. ☐ The recipient, via a court proceeding or the like (*e.g.*, bankruptcy, probate), of an undivided interest in the entirety (a complete transfer of ownership interest was made). The certified document(s) showing the transfer is attached.

The interest identified in option 1, 2 or 3 above (not option 4) is evidenced by either (choose **one** of options A or B below):

A. ☑ An assignment from the inventor(s) of the patent application/patent identified above. The assignment was recorded in the United States Patent and Trademark Office at Reel 033361, Frame 0475, or for which a copy thereof is attached.

B. ☐ A chain of title from the inventor(s), of the patent application/patent identified above, to the current assignee as follows:

1. From: _____ To: _____

The document was recorded in the United States Patent and Trademark Office at

Reel _____, Frame _____, or for which a copy thereof is attached.

2. From: _____ To: _____

The document was recorded in the United States Patent and Trademark Office at

Reel _____, Frame _____, or for which a copy thereof is attached.

This collection of information is required by 37 CFR 3.73(b). The information is required to obtain or retain a benefit by the public which is to file (and by the USPTO to process) an application. Confidentiality is governed by 35 U.S.C. 122 and 37 CFR 1.11 and 1.14. This collection is estimated to take 12 minutes to complete, including gathering, preparing, and submitting the completed application form to the USPTO. Time will vary depending upon the individual case. Any comments on the amount of time you require to complete this form and/or suggestions for reducing this burden, should be sent to the Chief Information Officer, U.S. Patent and Trademark Office, U.S. Department of Commerce, P.O. Box 1450, Alexandria, VA 22313-1450. DO NOT SEND FEES OR COMPLETED FORMS TO THIS ADDRESS. **SEND TO: Commissioner for Patents, P.O. Box 1450, Alexandria, VA 22313-1450.**

If you need assistance in completing the form, call 1-800-PTO-9199 and select option 2.

Under the Paperwork Reduction Act of 1995, no persons are required to respond to a collection of information unless it displays a valid OMB control number.

STATEMENT UNDER 37 CFR 3.73(c)

3. From: _____ To: _____

The document was recorded in the United States Patent and Trademark Office at

Reel _____, Frame _____, or for which a copy thereof is attached.

4. From: _____ To: _____

The document was recorded in the United States Patent and Trademark Office at

Reel _____, Frame _____, or for which a copy thereof is attached.

5. From: _____ To: _____

The document was recorded in the United States Patent and Trademark Office at

Reel _____, Frame _____, or for which a copy thereof is attached.

6. From: _____ To: _____

The document was recorded in the United States Patent and Trademark Office at

Reel _____, Frame _____, or for which a copy thereof is attached.

☐ Additional documents in the chain of title are listed on a supplemental sheet(s).

☑ As required by 37 CFR 3.73(c)(1)(i), the documentary evidence of the chain of title from the original owner to the assignee was, or concurrently is being, submitted for recordation pursuant to 37 CFR 3.11.

[NOTE: A separate copy (i.e., a true copy of the original assignment document(s)) must be submitted to Assignment Division in accordance with 37 CFR Part 3, to record the assignment in the records of the USPTO. See MPEP 302.08]

The undersigned (whose title is supplied below) is authorized to act on behalf of the assignee.

/Joseph Bach/	May 30, 2017
Signature	Date
Joseph Bach	37,771
Printed or Typed Name	Title or Registration Number

Privacy Act Statement

The **Privacy Act of 1974 (P.L. 93-579)** requires that you be given certain information in connection with your submission of the attached form related to a patent application or patent. Accordingly, pursuant to the requirements of the Act, please be advised that: (1) the general authority for the collection of this information is 35 U.S.C. 2(b)(2); (2) furnishing of the information solicited is voluntary; and (3) the principal purpose for which the information is used by the U.S. Patent and Trademark Office is to process and/or examine your submission related to a patent application or patent. If you do not furnish the requested information, the U.S. Patent and Trademark Office may not be able to process and/or examine your submission, which may result in termination of proceedings or abandonment of the application or expiration of the patent.

The information provided by you in this form will be subject to the following routine uses:

1. The information on this form will be treated confidentially to the extent allowed under the Freedom of Information Act (5 U.S.C. 552) and the Privacy Act (5 U.S.C 552a). Records from this system of records may be disclosed to the Department of Justice to determine whether disclosure of these records is required by the Freedom of Information Act.
2. A record from this system of records may be disclosed, as a routine use, in the course of presenting evidence to a court, magistrate, or administrative tribunal, including disclosures to opposing counsel in the course of settlement negotiations.
3. A record in this system of records may be disclosed, as a routine use, to a Member of Congress submitting a request involving an individual, to whom the record pertains, when the individual has requested assistance from the Member with respect to the subject matter of the record.
4. A record in this system of records may be disclosed, as a routine use, to a contractor of the Agency having need for the information in order to perform a contract. Recipients of information shall be required to comply with the requirements of the Privacy Act of 1974, as amended, pursuant to 5 U.S.C. 552a(m).
5. A record related to an International Application filed under the Patent Cooperation Treaty in this system of records may be disclosed, as a routine use, to the International Bureau of the World Intellectual Property Organization, pursuant to the Patent Cooperation Treaty.
6. A record in this system of records may be disclosed, as a routine use, to another federal agency for purposes of National Security review (35 U.S.C. 181) and for review pursuant to the Atomic Energy Act (42 U.S.C. 218(c)).
7. A record from this system of records may be disclosed, as a routine use, to the Administrator, General Services, or his/her designee, during an inspection of records conducted by GSA as part of that agency's responsibility to recommend improvements in records management practices and programs, under authority of 44 U.S.C. 2904 and 2906. Such disclosure shall be made in accordance with the GSA regulations governing inspection of records for this purpose, and any other relevant (*i.e.*, GSA or Commerce) directive. Such disclosure shall not be used to make determinations about individuals.
8. A record from this system of records may be disclosed, as a routine use, to the public after either publication of the application pursuant to 35 U.S.C. 122(b) or issuance of a patent pursuant to 35 U.S.C. 151. Further, a record may be disclosed, subject to the limitations of 37 CFR 1.14, as a routine use, to the public if the record was filed in an application which became abandoned or in which the proceedings were terminated and which application is referenced by either a published application, an application open to public inspection or an issued patent.
9. A record from this system of records may be disclosed, as a routine use, to a Federal, State, or local law enforcement agency, if the USPTO becomes aware of a violation or potential violation of law or regulation.

Electronic Acknowledgement Receipt

EFS ID:	29342582
Application Number:	13843001
International Application Number:	
Confirmation Number:	2550
Title of Invention:	DEVICES, SYSTEMS AND METHODS OF CAPTURING AND DISPLAYING APPEARANCES
First Named Inventor/Applicant Name:	Nissi Vilcovsky
Customer Number:	46188
Filer:	Joseph Bach/Monica Moreno
Filer Authorized By:	Joseph Bach
Attorney Docket Number:	067055-002000
Receipt Date:	30-MAY-2017
Filing Date:	15-MAR-2013
Time Stamp:	15:52:01
Application Type:	Utility under 35 USC 111(a)

Payment information:

Submitted with Payment	no

File Listing:

Document Number	Document Description	File Name	File Size(Bytes)/ Message Digest	Multi Part /.zip	Pages (if appl.)
1	Application Data Sheet	067055-002000_Suppl_ADS.pdf	3189350 8969fa13ba2f378f3ded7690ed3eed7f06c9a09a	no	9

Warnings:

Information:					
This is not an USPTO supplied ADS fillable form					
2	Power of Attorney	067055-002000_POA.pdf	983159 1d822d453e71a833ee42524f0403f950ccdec422	no	1
Warnings:					
Information:					
3	Assignee showing of ownership per 37 CFR 3.73	3_73c.pdf	578874 95d2dc111f1305ffd1a39a86674d20d9fc228aa6	no	3
Warnings:					
Information:					
			Total Files Size (in bytes):	4751383	

This Acknowledgement Receipt evidences receipt on the noted date by the USPTO of the indicated documents, characterized by the applicant, and including page counts, where applicable. It serves as evidence of receipt similar to a Post Card, as described in MPEP 503.

<u>New Applications Under 35 U.S.C. 111</u>
If a new application is being filed and the application includes the necessary components for a filing date (see 37 CFR 1.53(b)-(d) and MPEP 506), a Filing Receipt (37 CFR 1.54) will be issued in due course and the date shown on this Acknowledgement Receipt will establish the filing date of the application.
<u>National Stage of an International Application under 35 U.S.C. 371</u>
If a timely submission to enter the national stage of an international application is compliant with the conditions of 35 U.S.C. 371 and other applicable requirements a Form PCT/DO/EO/903 indicating acceptance of the application as a national stage submission under 35 U.S.C. 371 will be issued in addition to the Filing Receipt, in due course.
<u>New International Application Filed with the USPTO as a Receiving Office</u>
If a new international application is being filed and the international application includes the necessary components for an international filing date (see PCT Article 11 and MPEP 1810), a Notification of the International Application Number and of the International Filing Date (Form PCT/RO/105) will be issued in due course, subject to prescriptions concerning national security, and the date shown on this Acknowledgement Receipt will establish the international filing date of the application.

PTO/AIA/14 (11-15)
Approved for use through 04/30/2017. OMB 0651-0032
U.S. Patent and Trademark Office; U.S. DEPARTMENT OF COMMERCE
Under the Paperwork Reduction Act of 1995, no persons are required to respond to a collection of information unless it contains a valid OMB control number.

Supplemental Application Data Sheet 37 CFR 1.76	Attorney Docket Number	067055-002000
	Application Number	
Title of Invention	DEVICES, SYSTEMS AND METHODS OF CAPTURING AND DISPLAYING APPEARANCES	

The application data sheet is part of the provisional or nonprovisional application for which it is being submitted. The following form contains the bibliographic data arranged in a format specified by the United States Patent and Trademark Office as outlined in 37 CFR 1.76.
This document may be completed electronically and submitted to the Office in electronic format using the Electronic Filing System (EFS) or the document may be printed and included in a paper filed application.

Secrecy Order 37 CFR 5.2:

☐ Portions or all of the application associated with this Application Data Sheet may fall under a Secrecy Order pursuant to 37 CFR 5.2 (Paper filers only. Applications that fall under Secrecy Order may not be filed electronically.)

Inventor Information:

Inventor 1 Remove

Legal Name

Prefix	Given Name	Middle Name	Family Name	Suffix
	Nissi		Vilcovsky	

Residence Information (Select One) ○ US Residency ◉ Non US Residency ○ Active US Military Service

City	Tokyo	Country of Residence i	JP

Mailing Address of Inventor:

Address 1	2-22-18-501 Ebisu, Shibuy		
Address 2			
City	Tokyo	**State/Province**	
Postal Code	150 0013	**Country** i	JP

Inventor 2 Remove

Legal Name

Prefix	Given Name	Middle Name	Family Name	Suffix
	Ofer		Saban	

Residence Information (Select One) ◉ US Residency ○ Non US Residency ○ Active US Military Service

City	Vienna	State/Province	VA	Country of Residence i	US

Mailing Address of Inventor:

Address 1	1983 Horse Shoe Drive		
Address 2			
City	Vienna	**State/Province**	VA
Postal Code	22182	**Country** i	US

All Inventors Must Be Listed - Additional Inventor Information blocks may be generated within this form by selecting the **Add** button. Add

Correspondence Information:

PTO/AIA/14 (11-15)
Approved for use through 04/30/2017. OMB 0651-0032
U.S. Patent and Trademark Office; U.S. DEPARTMENT OF COMMERCE
Under the Paperwork Reduction Act of 1995, no persons are required to respond to a collection of information unless it contains a valid OMB control number.

Supplemental Application Data Sheet 37 CFR 1.76	Attorney Docket Number	067055-002000
	Application Number	
Title of Invention	DEVICES, SYSTEMS AND METHODS OF CAPTURING AND DISPLAYING APPEARANCES	

Enter either Customer Number or complete the Correspondence Information section below.
For further information see 37 CFR 1.33(a).

☐ **An Address is being provided for the correspondence Information of this application.**

Customer Number	~~46188~~ 146807
Email Address	~~PatentSV@nixonpeabody.com~~ PatentDocketing@wcsr.com Add Email Remove Email

Application Information:

Title of the Invention	DEVICES, SYSTEMS AND METHODS OF CAPTURING AND DISPLAYING APPEARANCES		
Attorney Docket Number	067055-002000	**Small Entity Status Claimed** ☒	
Application Type	Nonprovisional		
Subject Matter	Utility		
Total Number of Drawing Sheets (if any)	10	**Suggested Figure for Publication (if any)**	

Filing By Reference:

Only complete this section when filing an application by reference under 35 U.S.C. 111(c) and 37 CFR 1.57(a). Do not complete this section if application papers including a specification and any drawings are being filed. Any domestic benefit or foreign priority information must be provided in the appropriate section(s) below (i.e., "Domestic Benefit/National Stage Information" and "Foreign Priority Information").

For the purposes of a filing date under 37 CFR 1.53(b), the description and any drawings of the present application are replaced by this reference to the previously filed application, subject to conditions and requirements of 37 CFR 1.57(a).

Application number of the previously filed application	Filing date (YYYY-MM-DD)	Intellectual Property Authority or Country

Publication Information:

☐ Request Early Publication (Fee required at time of Request 37 CFR 1.219)

☐ **Request Not to Publish.** I hereby request that the attached application not be published under 35 U.S.C. 122(b) and certify that the invention disclosed in the attached application **has not and will not** be the subject of an application filed in another country, or under a multilateral international agreement, that requires publication at eighteen months after filing.

Representative Information:

Representative information should be provided for all practitioners having a power of attorney in the application. Providing this information in the Application Data Sheet does not constitute a power of attorney in the application (see 37 CFR 1.32).
Either enter Customer Number or complete the Representative Name section below. If both sections are completed the customer Number will be used for the Representative Information during processing.

Please Select One:	◉ Customer Number	○ US Patent Practitioner	○ Limited Recognition (37 CFR 11.9)
Customer Number	~~46188~~ - 146807		

Under the Paperwork Reduction Act of 1995, no persons are required to respond to a collection of information unless it contains a valid OMB control number.

Supplemental Application Data Sheet 37 CFR 1.76	Attorney Docket Number	067055-002000
	Application Number	
Title of Invention	DEVICES, SYSTEMS AND METHODS OF CAPTURING AND DISPLAYING APPEARANCES	

Domestic Benefit/National Stage Information:

This section allows for the applicant to either claim benefit under 35 U.S.C. 119(e), 120, 121, 365(c), or 386(c) or indicate National Stage entry from a PCT application. Providing benefit claim information in the Application Data Sheet constitutes the specific reference required by 35 U.S.C. 119(e) or 120, and 37 CFR 1.78.
When referring to the current application, please leave the "Application Number" field blank.

Prior Application Status					Remove
Application Number	Continuity Type	Prior Application Number	Filing or 371(c) Date (YYYY-MM-DD)		
	Continuation in part of	13088369	2011-04-17		
Prior Application Status	Patented				Remove
Application Number	Continuity Type	Prior Application Number	Filing Date (YYYY-MM-DD)	Patent Number	Issue Date (YYYY-MM-DD)
13088369	Continuation of	11817411	2007-08-30	7948481	2011-05-24
Prior Application Status					Remove
Application Number	Continuity Type	Prior Application Number	Filing or 371(c) Date (YYYY-MM-DD)		
11817411	a 371 of international	PCT/IL06/000281	2006-03-01		
Prior Application Status					Remove
Application Number	Continuity Type	Prior Application Number	Filing or 371(c) Date (YYYY-MM-DD)		
PCT/IL06/000281	Claims benefit of provisional	60656884	2005-03-01		
Prior Application Status					Remove
Application Number	Continuity Type	Prior Application Number	Filing or 371(c) Date (YYYY-MM-DD)		
PCT/IL06/000281	Claims benefit of provisional	60656885	2005-03-01		
Prior Application Status					Remove
Application Number	Continuity Type	Prior Application Number	Filing or 371(c) Date (YYYY-MM-DD)		
	Claims benefit of provisional	61738957	2012-12-18		

Additional Domestic Benefit/National Stage Data may be generated within this form by selecting the **Add** button.

Foreign Priority Information:

Supplemental Application Data Sheet 37 CFR 1.76	Attorney Docket Number	067055-002000
	Application Number	
Title of Invention	DEVICES, SYSTEMS AND METHODS OF CAPTURING AND DISPLAYING APPEARANCES	

This section allows for the applicant to claim priority to a foreign application. Providing this information in the application data sheet constitutes the claim for priority as required by 35 U.S.C. 119(b) and 37 CFR 1.55. When priority is claimed to a foreign application that is eligible for retrieval under the priority document exchange program (PDX)[i] the information will be used by the Office to automatically attempt retrieval pursuant to 37 CFR 1.55(i)(1) and (2). Under the PDX program, applicant bears the ultimate responsibility for ensuring that a copy of the foreign application is received by the Office from the participating foreign intellectual property office, or a certified copy of the foreign priority application is filed, within the time period specified in 37 CFR 1.55(g)(1).

Remove

Application Number	Country[i]	Filing Date (YYYY-MM-DD)	Access Code[i] (if applicable)

Additional Foreign Priority Data may be generated within this form by selecting the **Add** button.

Statement under 37 CFR 1.55 or 1.78 for AIA (First Inventor to File) Transition Applications

☐ This application (1) claims priority to or the benefit of an application filed before March 16, 2013 and (2) also contains, or contained at any time, a claim to a claimed invention that has an effective filing date on or after March 16, 2013.
NOTE: By providing this statement under 37 CFR 1.55 or 1.78, this application, with a filing date on or after March 16, 2013, will be examined under the first inventor to file provisions of the AIA.

Supplemental Application Data Sheet 37 CFR 1.76	Attorney Docket Number	067055-002000
	Application Number	
Title of Invention	DEVICES, SYSTEMS AND METHODS OF CAPTURING AND DISPLAYING APPEARANCES	

Authorization or Opt-Out of Authorization to Permit Access:

When this Application Data Sheet is properly signed and filed with the application, applicant has provided written authority to permit a participating foreign intellectual property (IP) office access to the instant application-as-filed (see paragraph A in subsection 1 below) and the European Patent Office (EPO) access to any search results from the instant application (see paragraph B in subsection 1 below).

Should applicant choose not to provide an authorization identified in subsection 1 below, applicant **must opt-out** of the authorization by checking the corresponding box A or B or both in subsection 2 below.

NOTE: This section of the Application Data Sheet is **ONLY** reviewed and processed with the **INITIAL** filing of an application. After the initial filing of an application, an Application Data Sheet cannot be used to provide or rescind authorization for access by a foreign IP office(s). Instead, Form PTO/SB/39 or PTO/SB/69 must be used as appropriate.

1. Authorization to Permit Access by a Foreign Intellectual Property Office(s)

A. Priority Document Exchange (PDX) - Unless box A in subsection 2 (opt-out of authorization) is checked, the undersigned hereby **grants the USPTO authority** to provide the European Patent Office (EPO), the Japan Patent Office (JPO), the Korean Intellectual Property Office (KIPO), the State Intellectual Property Office of the People's Republic of China (SIPO), the World Intellectual Property Organization (WIPO), and any other foreign intellectual property office participating with the USPTO in a bilateral or multilateral priority document exchange agreement in which a foreign application claiming priority to the instant patent application is filed, access to: (1) the instant patent application-as-filed and its related bibliographic data, (2) any foreign or domestic application to which priority or benefit is claimed by the instant application and its related bibliographic data, and (3) the date of filing of this Authorization. See 37 CFR 1.14(h)(1).

B. Search Results from U.S. Application to EPO - Unless box B in subsection 2 (opt-out of authorization) is checked, the undersigned hereby **grants the USPTO authority** to provide the EPO access to the bibliographic data and search results from the instant patent application when a European patent application claiming priority to the instant patent application is filed. See 37 CFR 1.14(h)(2).

The applicant is reminded that the EPO's Rule 141(1) EPC (European Patent Convention) requires applicants to submit a copy of search results from the instant application without delay in a European patent application that claims priority to the instant application.

2. Opt-Out of Authorizations to Permit Access by a Foreign Intellectual Property Office(s)

☐ A. Applicant **DOES NOT** authorize the USPTO to permit a participating foreign IP office access to the instant application-as-filed. If this box is checked, the USPTO will not be providing a participating foreign IP office with any documents and information identified in subsection 1A above.

☐ B. Applicant **DOES NOT** authorize the USPTO to transmit to the EPO any search results from the instant patent application. If this box is checked, the USPTO will not be providing the EPO with search results from the instant application.

NOTE: Once the application has published or is otherwise publicly available, the USPTO may provide access to the application in accordance with 37 CFR 1.14.

Under the Paperwork Reduction Act of 1995, no persons are required to respond to a collection of information unless it contains a valid OMB control number.

Supplemental Application Data Sheet 37 CFR 1.76	Attorney Docket Number	067055-002000
	Application Number	
Title of Invention	DEVICES, SYSTEMS AND METHODS OF CAPTURING AND DISPLAYING APPEARANCES	

Applicant Information:

Providing assignment information in this section does not substitute for compliance with any requirement of part 3 of Title 37 of CFR to have an assignment recorded by the Office.

Applicant 1

If the applicant is the inventor (or the remaining joint inventor or inventors under 37 CFR 1.45), this section should not be completed. The information to be provided in this section is the name and address of the legal representative who is the applicant under 37 CFR 1.43; or the name and address of the assignee, person to whom the inventor is under an obligation to assign the invention, or person who otherwise shows sufficient proprietary interest in the matter who is the applicant under 37 CFR 1.46. If the applicant is an applicant under 37 CFR 1.46 (assignee, person to whom the inventor is obligated to assign, or person who otherwise shows sufficient proprietary interest) together with one or more joint inventors, then the joint inventor or inventors who are also the applicant should be identified in this section.

Clear

◉ Assignee	○ Legal Representative under 35 U.S.C. 117	○ Joint Inventor
○ Person to whom the inventor is obligated to assign.	○ Person who shows sufficient proprietary interest	

If applicant is the legal representative, indicate the authority to file the patent application, the inventor is:

Name of the Deceased or Legally Incapacitated Inventor:

If the Applicant is an Organization check here. ☒

Organization Name	EyesMatch Ltd.		
Mailing Address Information For Applicant:			
Address 1	19 Waterfront Drive, P.O. Box 3540		
Address 2			
City	Road Town, Tortola	**State/Province**	
Country	VG	Postal Code	VG1110
Phone Number		Fax Number	
Email Address			

Additional Applicant Data may be generated within this form by selecting the Add button.

Assignee Information including Non-Applicant Assignee Information:

Providing assignment information in this section does not substitute for compliance with any requirement of part 3 of Title 37 of CFR to have an assignment recorded by the Office.

Under the Paperwork Reduction Act of 1995, no persons are required to respond to a collection of information unless it contains a valid OMB control number.

Supplemental Application Data Sheet 37 CFR 1.76	Attorney Docket Number	067055-002000
	Application Number	
Title of Invention	DEVICES, SYSTEMS AND METHODS OF CAPTURING AND DISPLAYING APPEARANCES	

Assignee 1

Complete this section if assignee information, including non-applicant assignee information, is desired to be included on the patent application publication. An assignee-applicant identified in the "Applicant Information" section will appear on the patent application publication as an applicant. For an assignee-applicant, complete this section only if identification as an assignee is also desired on the patent application publication.

If the Assignee or Non-Applicant Assignee is an Organization check here. ☐

Prefix	**Given Name**	Middle Name	**Family Name**	Suffix

Mailing Address Information For Assignee including Non-Applicant Assignee:

Address 1			
Address 2			
City		**State/Province**	
Country i		Postal Code	
Phone Number		Fax Number	
Email Address			

Additional Assignee or Non-Applicant Assignee Data may be generated within this form by selecting the Add button.

Signature:

NOTE: This Application Data Sheet must be signed in accordance with 37 CFR 1.33(b). **However, if this Application Data Sheet is submitted with the INITIAL filing of the application and either box A or B is not checked in subsection 2 of the "Authorization or Opt-Out of Authorization to Permit Access" section, then this form must also be signed in accordance with 37 CFR 1.14(c).**

This Application Data Sheet **must** be signed by a patent practitioner if one or more of the applicants is a **juristic entity** (e.g., corporation or association). If the applicant is two or more joint inventors, this form must be signed by a patent practitioner, **all** joint inventors who are the applicant, or one or more joint inventor-applicants who have been given power of attorney (e.g., see USPTO Form PTO/AIA/81) on behalf of **all** joint inventor-applicants.

See 37 CFR 1.4(d) for the manner of making signatures and certifications.

Signature	/Joseph Bach/			Date (YYYY-MM-DD)	2017-05-30
First Name	Joseph	Last Name	Bach	Registration Number	37,771

Additional Signature may be generated within this form by selecting the Add button.

Under the Paperwork Reduction Act of 1995, no persons are required to respond to a collection of information unless it contains a valid OMB control number.

Supplemental Application Data Sheet 37 CFR 1.76	Attorney Docket Number	067055-002000
	Application Number	
Title of Invention	DEVICES, SYSTEMS AND METHODS OF CAPTURING AND DISPLAYING APPEARANCES	

This collection of information is required by 37 CFR 1.76. The information is required to obtain or retain a benefit by the public which is to file (and by the USPTO to process) an application. Confidentiality is governed by 35 U.S.C. 122 and 37 CFR 1.14. This collection is estimated to take 23 minutes to complete, including gathering, preparing, and submitting the completed application data sheet form to the USPTO. Time will vary depending upon the individual case. Any comments on the amount of time you require to complete this form and/or suggestions for reducing this burden, should be sent to the Chief Information Officer, U.S. Patent and Trademark Office, U.S. Department of Commerce, P.O. Box 1450, Alexandria, VA 22313-1450. DO NOT SEND FEES OR COMPLETED FORMS TO THIS ADDRESS. **SEND TO: Commissioner for Patents, P.O. Box 1450, Alexandria, VA 22313-1450.**

Privacy Act Statement

The Privacy Act of 1974 (P.L. 93-579) requires that you be given certain information in connection with your submission of the attached form related to a patent application or patent. Accordingly, pursuant to the requirements of the Act, please be advised that: (1) the general authority for the collection of this information is 35 U.S.C. 2(b)(2); (2) furnishing of the information solicited is voluntary; and (3) the principal purpose for which the information is used by the U.S. Patent and Trademark Office is to process and/or examine your submission related to a patent application or patent. If you do not furnish the requested information, the U.S. Patent and Trademark Office may not be able to process and/or examine your submission, which may result in termination of proceedings or abandonment of the application or expiration of the patent.

The information provided by you in this form will be subject to the following routine uses:

1 The information on this form will be treated confidentially to the extent allowed under the Freedom of Information Act (5 U.S.C. 552) and the Privacy Act (5 U.S.C. 552a). Records from this system of records may be disclosed to the Department of Justice to determine whether the Freedom of Information Act requires disclosure of these records.

2. A record from this system of records may be disclosed, as a routine use, in the course of presenting evidence to a court, magistrate, or administrative tribunal, including disclosures to opposing counsel in the course of settlement negotiations.

3 A record in this system of records may be disclosed, as a routine use, to a Member of Congress submitting a request involving an individual, to whom the record pertains, when the individual has requested assistance from the Member with respect to the subject matter of the record.

4. A record in this system of records may be disclosed, as a routine use, to a contractor of the Agency having need for the information in order to perform a contract. Recipients of information shall be required to comply with the requirements of the Privacy Act of 1974, as amended, pursuant to 5 U.S.C. 552a(m).

5. A record related to an International Application filed under the Patent Cooperation Treaty in this system of records may be disclosed, as a routine use, to the International Bureau of the World Intellectual Property Organization, pursuant to the Patent CooperationTreaty.

6. A record in this system of records may be disclosed, as a routine use, to another federal agency for purposes of National Security review (35 U.S.C. 181) and for review pursuant to the Atomic Energy Act (42 U.S.C. 218(c)).

7. A record from this system of records may be disclosed, as a routine use, to the Administrator, General Services, or his/her designee, during an inspection of records conducted by GSA as part of that agency's responsibility to recommend improvements in records management practices and programs, under authority of 44 U.S.C. 2904 and 2906. Such disclosure shall be made in accordance with the GSA regulations governing inspection of records for this purpose, and any other relevant (i.e., GSA or Commerce) directive. Such disclosure shall not be used to make determinations about individuals.

8. A record from this system of records may be disclosed, as a routine use, to the public after either publication of the application pursuant to 35 U.S.C. 122(b) or issuance of a patent pursuant to 35 U.S.C. 151. Further, a record may be disclosed, subject to the limitations of 37 CFR 1.14, as a routine use, to the public if the record was filed in an application which became abandoned or in which the proceedings were terminated and which application is referenced by either a published application, an application open to public inspections or an issued patent.

9. A record from this system of records may be disclosed, as a routine use, to a Federal, State, or local law enforcement agency, if the USPTO becomes aware of a violation or potential violation of law or regulation.

UNITED STATES PATENT AND TRADEMARK OFFICE

UNITED STATES DEPARTMENT OF COMMERCE
United States Patent and Trademark Office
Address: COMMISSIONER FOR PATENTS
P.O. Box 1450
Alexandria, Virginia 22313-1450
www.uspto.gov

APPLICATION NUMBER	FILING OR 371(C) DATE	FIRST NAMED APPLICANT	ATTY. DOCKET NO./TITLE
13/843,001	03/15/2013	Nissi Vilcovsky	067055-002000

CONFIRMATION NO. 2550

46188
Nixon Peabody LLP
P.O. Box 26769
San Francisco, CA 94126

POWER OF ATTORNEY NOTICE

OC000000091833540

Date Mailed: 06/06/2017

NOTICE REGARDING CHANGE OF POWER OF ATTORNEY

This is in response to the Power of Attorney filed 05/30/2017.

- The Power of Attorney to you in this application has been revoked by the assignee who has intervened as provided by 37 CFR 3.71. Future correspondence will be mailed to the new address of record(37 CFR 1.33).

Questions about the contents of this notice and the requirements it sets forth should be directed to the Office of Data Management, Application Assistance Unit, at **(571) 272-4000** or **(571) 272-4200** or **1-888-786-0101**.

/fstephanos/

UNITED STATES PATENT AND TRADEMARK OFFICE

UNITED STATES DEPARTMENT OF COMMERCE
United States Patent and Trademark Office
Address: COMMISSIONER FOR PATENTS
P.O. Box 1450
Alexandria, Virginia 22313-1450
www.uspto.gov

APPLICATION NUMBER	FILING OR 371(C) DATE	FIRST NAMED APPLICANT	ATTY. DOCKET NO./TITLE
13/843,001	03/15/2013	Nissi Vilcovsky	067055-002000

CONFIRMATION NO. 2550

POA ACCEPTANCE LETTER

146807
Womble Carlyle Sandridge & Rice, LLP
Attn: IP Docketing
P.O. Box 7037
Atlanta, GA 30537-7037

OC000000091833542

Date Mailed: 06/06/2017

NOTICE OF ACCEPTANCE OF POWER OF ATTORNEY

This is in response to the Power of Attorney filed 05/30/2017.

The Power of Attorney in this application is accepted. Correspondence in this application will be mailed to the above address as provided by 37 CFR 1.33.

Questions about the contents of this notice and the requirements it sets forth should be directed to the Office of Data Management, Application Assistance Unit, at **(571) 272-4000** or **(571) 272-4200** or **1-888-786-0101**.

/fstephanos/

UNITED STATES PATENT AND TRADEMARK OFFICE

UNITED STATES DEPARTMENT OF COMMERCE
United States Patent and Trademark Office
Address: COMMISSIONER FOR PATENTS
P.O. Box 1450
Alexandria, Virginia 22313-1450
www.uspto.gov

APPLICATION NUMBER	FILING or 371(c) DATE	GRP ART UNIT	FIL FEE REC'D	ATTY.DOCKET.NO	TOT CLAIMS	IND CLAIMS
13/843,001	03/15/2013	2697	603	067055-002000	20	1

CONFIRMATION NO. 2550
REPLACEMENT FILING RECEIPT

146807
Womble Carlyle Sandridge & Rice, LLP
Attn: IP Docketing
P.O. Box 7037
Atlanta, GA 30537-7037

OC000000091833543

Date Mailed: 06/06/2017

Receipt is acknowledged of this non-provisional patent application. The application will be taken up for examination in due course. Applicant will be notified as to the results of the examination. Any correspondence concerning the application must include the following identification information: the U.S. APPLICATION NUMBER, FILING DATE, NAME OF APPLICANT, and TITLE OF INVENTION. Fees transmitted by check or draft are subject to collection. Please verify the accuracy of the data presented on this receipt. **If an error is noted on this Filing Receipt, please submit a written request for a Filing Receipt Correction. Please provide a copy of this Filing Receipt with the changes noted thereon. If you received a "Notice to File Missing Parts" for this application, please submit any corrections to this Filing Receipt with your reply to the Notice. When the USPTO processes the reply to the Notice, the USPTO will generate another Filing Receipt incorporating the requested corrections**

Inventor(s)

Nissi Vilcovsky, Tokyo, JAPAN;
Ofer Saban, Vienna, VA;

Applicant(s)

EyesMatch Ltd., Tortola, VIRGIN ISLANDS, BRITISH;

Power of Attorney: The patent practitioners associated with Customer Number 146807

Domestic Priority data as claimed by applicant

This application is a CIP of 13/088,369 04/17/2011 PAT 8624883
which is a CON of 11/817,411 08/30/2007 PAT 7948481
which is a 371 of PCT/IL06/00281 03/01/2006
which claims benefit of 60/656,884 03/01/2005
and claims benefit of 60/656,885 03/01/2005
This application 13/843,001
claims benefit of 61/738,957 12/18/2012

Foreign Applications for which priority is claimed (You may be eligible to benefit from the **Patent Prosecution Highway** program at the USPTO. Please see http://www.uspto.gov for more information.) - None.
Foreign application information must be provided in an Application Data Sheet in order to constitute a claim to foreign priority. See 37 CFR 1.55 and 1.76.

Permission to Access Application via Priority Document Exchange: Yes

Permission to Access Search Results: No

Applicant may provide or rescind an authorization for access using Form PTO/SB/39 or Form PTO/SB/69 as appropriate.

If Required, Foreign Filing License Granted: 05/02/2013

The country code and number of your priority application, to be used for filing abroad under the Paris Convention, is **US 13/843,001**

Projected Publication Date: Not Applicable

Non-Publication Request: No

Early Publication Request: No
**** SMALL ENTITY ****
Title

DEVICES, SYSTEMS AND METHODS OF CAPTURING AND DISPLAYING APPEARANCES

Preliminary Class

345

Statement under 37 CFR 1.55 or 1.78 for AIA (First Inventor to File) Transition Applications: No

PROTECTING YOUR INVENTION OUTSIDE THE UNITED STATES

Since the rights granted by a U.S. patent extend only throughout the territory of the United States and have no effect in a foreign country, an inventor who wishes patent protection in another country must apply for a patent in a specific country or in regional patent offices. Applicants may wish to consider the filing of an international application under the Patent Cooperation Treaty (PCT). An international (PCT) application generally has the same effect as a regular national patent application in each PCT-member country. The PCT process **simplifies** the filing of patent applications on the same invention in member countries, but **does not result** in a grant of "an international patent" and does not eliminate the need of applicants to file additional documents and fees in countries where patent protection is desired.

Almost every country has its own patent law, and a person desiring a patent in a particular country must make an application for patent in that country in accordance with its particular laws. Since the laws of many countries differ in various respects from the patent law of the United States, applicants are advised to seek guidance from specific foreign countries to ensure that patent rights are not lost prematurely.

Applicants also are advised that in the case of inventions made in the United States, the Director of the USPTO must issue a license before applicants can apply for a patent in a foreign country. The filing of a U.S. patent application serves as a request for a foreign filing license. The application's filing receipt contains further information and guidance as to the status of applicant's license for foreign filing.

Applicants may wish to consult the USPTO booklet, "General Information Concerning Patents" (specifically, the section entitled "Treaties and Foreign Patents") for more information on timeframes and deadlines for filing foreign patent applications. The guide is available either by contacting the USPTO Contact Center at 800-786-9199, or it can be viewed on the USPTO website at http://www.uspto.gov/web/offices/pac/doc/general/index.html.

For information on preventing theft of your intellectual property (patents, trademarks and copyrights), you may wish to consult the U.S. Government website, http://www.stopfakes.gov. Part of a Department of Commerce initiative, this website includes self-help "toolkits" giving innovators guidance on how to protect intellectual property in specific

countries such as China, Korea and Mexico. For questions regarding patent enforcement issues, applicants may call the U.S. Government hotline at 1-866-999-HALT (1-866-999-4258).

LICENSE FOR FOREIGN FILING UNDER

Title 35, United States Code, Section 184

Title 37, Code of Federal Regulations, 5.11 & 5.15

GRANTED

The applicant has been granted a license under 35 U.S.C. 184, if the phrase "IF REQUIRED, FOREIGN FILING LICENSE GRANTED" followed by a date appears on this form. Such licenses are issued in all applications where the conditions for issuance of a license have been met, regardless of whether or not a license may be required as set forth in 37 CFR 5.15. The scope and limitations of this license are set forth in 37 CFR 5.15(a) unless an earlier license has been issued under 37 CFR 5.15(b). The license is subject to revocation upon written notification. The date indicated is the effective date of the license, unless an earlier license of similar scope has been granted under 37 CFR 5.13 or 5.14.

This license is to be retained by the licensee and may be used at any time on or after the effective date thereof unless it is revoked. This license is automatically transferred to any related applications(s) filed under 37 CFR 1.53(d). This license is not retroactive.

The grant of a license does not in any way lessen the responsibility of a licensee for the security of the subject matter as imposed by any Government contract or the provisions of existing laws relating to espionage and the national security or the export of technical data. Licensees should apprise themselves of current regulations especially with respect to certain countries, of other agencies, particularly the Office of Defense Trade Controls, Department of State (with respect to Arms, Munitions and Implements of War (22 CFR 121-128)); the Bureau of Industry and Security, Department of Commerce (15 CFR parts 730-774); the Office of Foreign AssetsControl, Department of Treasury (31 CFR Parts 500+) and the Department of Energy.

NOT GRANTED

No license under 35 U.S.C. 184 has been granted at this time, if the phrase "IF REQUIRED, FOREIGN FILING LICENSE GRANTED" DOES NOT appear on this form. Applicant may still petition for a license under 37 CFR 5.12, if a license is desired before the expiration of 6 months from the filing date of the application. If 6 months has lapsed from the filing date of this application and the licensee has not received any indication of a secrecy order under 35 U.S.C. 181, the licensee may foreign file the application pursuant to 37 CFR 5.15(b).

SelectUSA

The United States represents the largest, most dynamic marketplace in the world and is an unparalleled location for business investment, innovation, and commercialization of new technologies. The U.S. offers tremendous resources and advantages for those who invest and manufacture goods here. Through SelectUSA, our nation works to promote and facilitate business investment. SelectUSA provides information assistance to the international investor community; serves as an ombudsman for existing and potential investors; advocates on behalf of U.S. cities, states, and regions competing for global investment; and counsels U.S. economic development organizations on investment attraction best practices. To learn more about why the United States is the best country in the world to develop

technology, manufacture products, deliver services, and grow your business, visit http://www.SelectUSA.gov or call +1-202-482-6800.

AO 120 (Rev. 08/10)

TO:	Mail Stop 8 Director of the U.S. Patent and Trademark Office P.O. Box 1450 Alexandria, VA 22313-1450	REPORT ON THE FILING OR DETERMINATION OF AN ACTION REGARDING A PATENT OR TRADEMARK

In Compliance with 35 U.S.C. § 290 and/or 15 U.S.C. § 1116 you are hereby advised that a court action has been filed in the U.S. District Court For The District of Delaware on the following

☐ Trademarks or ☑ Patents. (☐ the patent action involves 35 U.S.C. § 292.):

DOCKET NO.	DATE FILED	U.S. DISTRICT COURT
	1/28/2021	For The District of Delaware

PLAINTIFF	DEFENDANT
EyesMatch Ltd. and Memomi Labs Inc.	Facebook, Inc., Instagram, LLC, and WhatsApp Inc.

	PATENT OR TRADEMARK NO.	DATE OF PATENT OR TRADEMARK	HOLDER OF PATENT OR TRADEMARK
1	US 8,624,883 B2	1/7/2014	EyesMatch Ltd.
2	US 7,948,481 B2	5/24/2011	EyesMatch Ltd.
3	US 8,982,109 B2	3/17/2015	EyesMatch Ltd.
4	US 8,982,110 B2	3/17/2015	EyesMatch Ltd.
5			

In the above—entitled case, the following patent(s)/ trademark(s) have been included:

DATE INCLUDED	INCLUDED BY ☐ Amendment ☐ Answer ☐ Cross Bill ☐ Other Pleading	
PATENT OR TRADEMARK NO.	DATE OF PATENT OR TRADEMARK	HOLDER OF PATENT OR TRADEMARK
1		
2		
3		
4		
5		

In the above—entitled case, the following decision has been rendered or judgement issued:

DECISION/JUDGEMENT

CLERK	(BY) DEPUTY CLERK	DATE

Copy 1—Upon initiation of action, mail this copy to Director Copy 3—Upon termination of action, mail this copy to Director
Copy 2—Upon filing document adding patent(s), mail this copy to Director Copy 4—Case file copy

UNITED STATES PATENT AND TRADEMARK OFFICE

UNITED STATES DEPARTMENT OF COMMERCE
United States Patent and Trademark Office
Address: COMMISSIONER FOR PATENTS
P.O. Box 1450
Alexandria, Virginia 22313-1450
www.uspto.gov

APPLICATION NUMBER	PATENT NUMBER	GROUP ART UNIT	REQUEST ID
13/843,001	8982109	2697	145596

PAIR Correspondence Address/Fee Address Change

The following fields have been changed to Customer Number 26158 on 08/16/2021 via Private PAIR in view of the certification copied below that authorized the change.

- Correspondence Address

The address for Customer Number 26158 is:
26158
WOMBLE BOND DICKINSON (US) LLP
ATTN: IP DOCKETING
P.O. BOX 7037
ATLANTA, GA 30357-0037

I certify, in accordance with 37 CFR 1.4(d)(4) that I am:

An attorney or Agent of Record registered to practice before the Patent and Trademark Office who has been given power of attorney in this application

Signature:	/CHRIS HUMPHREY/
Name:	Chris Humphrey
Registration Number:	43683

UNITED STATES PATENT AND TRADEMARK OFFICE

UNITED STATES DEPARTMENT OF COMMERCE
United States Patent and Trademark Office
Address: COMMISSIONER FOR PATENTS
P.O. Box 1450
Alexandria, Virginia 22313-1450
www.uspto.gov

APPLICATION NUMBER	PATENT NUMBER	GROUP ART UNIT	REQUEST ID
13/843,001	8982109	2697	145596

PAIR Correspondence Address/Fee Address Change

The following fields have been changed to Customer Number 26158 on 08/16/2021 via Private PAIR in view of the certification copied below that authorized the change.

- Maintenance Fee Address

The address for Customer Number 26158 is:
26158
WOMBLE BOND DICKINSON (US) LLP
ATTN: IP DOCKETING
P.O. BOX 7037
ATLANTA, GA 30357-0037

I certify, in accordance with 37 CFR 1.4(d)(4) that I am:

An attorney or Agent of Record registered to practice before the Patent and Trademark Office who has been given power of attorney in this application

Signature:	/CHRIS HUMPHREY/
Name:	Chris Humphrey
Registration Number:	43683

AO 120 (Rev. 08/10)

TO: Mail Stop 8 Director of the U.S. Patent and Trademark Office P.O. Box 1450 Alexandria, VA 22313-1450	**REPORT ON THE FILING OR DETERMINATION OF AN ACTION REGARDING A PATENT OR TRADEMARK**

In Compliance with 35 U.S.C. § 290 and/or 15 U.S.C. § 1116 you are hereby advised that a court action has been filed in the U.S. District Court For The District of Delaware on the following

☐ Trademarks or ☑ Patents. (☐ the patent action involves 35 U.S.C. § 292.):

DOCKET NO.	DATE FILED	U.S. DISTRICT COURT
21-111 - RGA-JLH	1/28/2021	For The District of Delaware

PLAINTIFF	DEFENDANT
EyesMatch Ltd. and Memomi Labs Inc.	Facebook, Inc., Instagram, LLC, and WhatsApp Inc.

	PATENT OR TRADEMARK NO.	DATE OF PATENT OR TRADEMARK	HOLDER OF PATENT OR TRADEMARK
1	US 8,624,883 B2	1/7/2014	EyesMatch Ltd.
2	US 7,948,481 B2	5/24/2011	EyesMatch Ltd.
3	US 8,982,109 B2	3/17/2015	EyesMatch Ltd.
4	US 8,982,110 B2	3/17/2015	EyesMatch Ltd.
5			

In the above—entitled case, the following patent(s)/ trademark(s) have been included:

DATE INCLUDED	INCLUDED BY ☐ Amendment ☐ Answer ☐ Cross Bill ☐ Other Pleading		
	PATENT OR TRADEMARK NO.	DATE OF PATENT OR TRADEMARK	HOLDER OF PATENT OR TRADEMARK
1			
2			
3			
4			
5			

In the above—entitled case, the following decision has been rendered or judgement issued:

DECISION/JUDGEMENT

See attached Order

CLERK	(BY) DEPUTY CLERK	DATE
John A. Cerino	N. Selmyer	6/28/2022

Copy 1—Upon initiation of action, mail this copy to Director Copy 3—Upon termination of action, mail this copy to Director
Copy 2—Upon filing document adding patent(s), mail this copy to Director Copy 4—Case file copy